CITY COMMISSION MEETING
CITY OF ST. PETE BEACH
COMMISSION CHAMBERS

155 Corey Avenue
St. Pete Beach, FL 33706

Tuesday, December 16, 2025
6:00 PM

Call to Order
Pledge of Allegiance
Roll Call

REGULAR MEETING

1. Approval of the Agenda -

Action Request: Motion to approve the December 16, 2025 agenda.

2. Presentations -

a. Proclamation Recognizing St. Pete Beach Fire Department Personnel for Exceptional Emergency Medical Response

b. Merry Pier Bait Shack

c. House Relocation to Pass-a-Grille Park

3. Audience Comments -

If you wish to speak, please complete and submit a speaker's card to the City Clerk. When called, approach the podium and state your name and address for the record. Comments are limited to 3 minutes for both general and agenda items. Public comment on agenda items will be taken when that item is called. Any presentation intended as part of public comment must be provided to the City Clerk at least 24 hours before the meeting.

4. Consent -

a. Approval of the Corey Avenue Business Association Temporary License Agreement Renewal for the Corey Avenue Sunday Market.

b. Approve the dedication of a memorial tree and bench, and authorize the renaming of the St. Pete Beach Library Community Room in honor of Bonnie Traiman.

c. Accept Expenditures for Emergency and Repairs FY2025 For Hurricane Helene and Hurricane Milton

5. Ordinances -

a. Final Reading of Ordinance 2025-23: Amendment of Procurement Regulations and Procedures

AN ORDINANCE OF THE CITY OF ST. PETE BEACH, FLORIDA PROVIDING AMENDMENT OF ARTICLE III, DIVISION 4, SECTIONS 2-281 THROUGH SECTIONS 2-295 OF THE ST. PETE BEACH CODE OF ORDINANCES; PROVIDING PURPOSE AND INTENT; UPDATING AND CLARIFYING THE DEFINITIONS; ESTABLISHING THE AUTHORITY AND DUTIES OF THE PROCUREMENT MANAGER; CLARIFYING THE AUTHORITY TO AWARD; UPDATING THE PROCUREMENT METHODOLOGY AND EMERGENCY PROCUREMENTS; CHANGING CONTRACT ADMINISTRATION; PRESCRIBING PROCUREMENT PROTESTS; ESTABLISHING A VENDOR SUSPENSION AND DEBARMENT PROCESS; PROVIDING FOR CODIFICATION; CONFLICTS; SEVERABILITY; CORRECTION OF SCRIVENER'S ERROR; CONSTRUCTION; PUBLICATION; AND AN EFFECTIVE DATE.

Action Request: Motion to [approve/approve with modification/deny/continue to [specify date certain]] Ordinance 2025-23.

b. Final Reading of Ordinance 2025-21: Amending Land Development Code standards pertaining to accessory structures and ancillary equipment, and nonconforming uses and structures, as well as allowing encroachment of stairs and balconies under specified circumstances

AN ORDINANCE OF THE CITY OF ST. PETE BEACH, AMENDING THE ST. PETE BEACH LAND DEVELOPMENT CODE SECTIONS 3.10., 6.13., 6.14., AND 6.22. TO INCREASE FRONT YARD STAIR ENCROACHMENTS FOR SPECIFIED RESIDENCES, ALLOW RETENTION OF NONCONFORMING BALCONY FOOTPRINTS AND SPECIFIED NONCONFORMING RESIDENTIAL ACCESSORY STRUCTURES FOLLOWING SUBSTANTIAL IMPROVEMENT TO THE PRIMARY RESIDENCE, CLARIFY RESTRICTIONS ON NONCONFORMING USES AND AMEND RESTRICTIONS ON ELEVATED AND SUBSTANTIALLY-IMPROVED NONCONFORMING STRUCTURES, MODIFY RESIDENTIAL STORAGE BUILDING STANDARDS, MODIFY RESIDENTIAL EQUIPMENT SETBACK STANDARDS, AND PROVIDE A FRONT YARD SETBACK LINE ALTERNATIVE FOR RESIDENTIAL CUL-DE-SAC AND CURVED STREET LOTS; PROVIDING FOR SEVERABILITY, CODIFICATION AND SCRIVENER'S ERRORS, AND PROVIDING FOR AN EFFECTIVE DATE.

Action Request: Motion to [adopt/adopt with modification/deny/continue to [specify date certain]] Ordinance 2025-21.

c. Final Reading of Ordinance 2025-22: Adopting Land Development Code Sec. 6.26. pertaining to reasonable accommodations for certified recovery residences

AN ORDINANCE OF THE CITY OF ST. PETE BEACH, FLORIDA, CREATING LAND DEVELOPMENT CODE SECTION 6.26. – CERTIFIED RECOVERY RESIDENCES; ESTABLISHING PROCEDURES FOR THE REVIEW AND APPROVAL OF CERTIFIED RECOVERY RESIDENCES AND A PROCESS FOR REQUESTING REASONABLE ACCOMMODATIONS FROM LOCAL LAND USE REGULATIONS AS MANDATED BY NEW FLORIDA STATUTE; PROVIDING FOR SEVERABILITY, CODIFICATION, CONFLICTS, AND AN EFFECTIVE DATE.

Action Request: Motion to [adopt/adopt with modifications/deny/continue to [specify date certain]] Ordinance 2025-22.

d. Final Reading of Ordinance 2025-25: Amending Land Development Code Sec. 3.14 Appeals

AN ORDINANCE OF THE CITY OF ST. PETE BEACH, FLORIDA PROVIDING FOR AMENDMENTS TO LAND DEVELOPMENT CODE 3.14 APPEALS; PROVIDING FOR CODIFICATION, CONFLICTS; SEVERABILITY; CORRECTION OF SCRIVENER'S ERRORS; CONSTRUCTION; PUBLICATION; AND AN EFFECTIVE DATE.

Action Request: Motion to [adopt/adopt with modification/deny/continue to [specify date certain]] Ordinance 2025-25.

e. Final Reading of Ordinance 2025-24: Revising Code of Ordinances Chapters 131 & 132 Pertaining to Communication and Small Wireless Facilities
AN ORDINANCE OF THE CITY OF ST. PETE BEACH, FLORIDA PROVIDING FOR AMENDMENTS TO THE CODE OF ORDINANCES CHAPTER 131 WIRELESS COMMUNICATION TOWERS AND ANTENNAS AND CHAPTER 132 COMMUNICATION FACILITIES IN THE PUBLIC RIGHTS-OF-WAY; RENAMING CHAPTER 132 TO COMMUNICATION FACILITIES IN THE CITY RIGHTS-OF-WAY; PROVIDING FOR CODIFICATION, CONFLICTS, SEVERABILITY, CORRECTION OF SCRIVENER'S ERRORS, CONSTRUCTION, PUBLICATION, AND AN EFFECTIVE DATE.

Action Request: Motion to [adopt/adopt with modification/deny/continue to [specify date certain]] Ordinance 2025-24.

6. Action Items -

a. Resolution 2025-27: Approving Conditional Use Permit No. 25133 for open deck dining on the second and third floors of a newly constructed restaurant on the property located at 804 Pass-a-Grille Way.
A RESOLUTION OF THE CITY OF ST. PETE BEACH, FLORIDA, AUTHORIZING A CONDITIONAL USE PERMIT FOR OR OPEN DECK DINING ON THE SECOND AND THIRD FLOORS OF A NEWLY CONSTRUCTED RESTAURANT ON THE PROPERTY LOCATED AT 804 PASS-A-GRILLE WAY AT PARCEL NUMBER 19-32-16-58932-005-0030 WITH ADDRESS OF 804 PASS-A-GRILLE WAY PURSUANT TO LAND DEVELOPMENT CODE SECTION (LDC Sec. 40.4.(b); INCORPORATING THE CONDITIONS OUTLINED HEREIN; AND PROVIDING FOR CORRECTION OF SCRIVENER'S ERROR AND AN EFFECTIVE DATE.

Motion Options: Motion to [approve/approve with modifications/deny/continue to date certain of [specify date]] Resolution 2025-27.

b. Resolution 2025-28: Approving Conditional Use Permit No. 25112 for Phase I & II Pump Station 1 Improvements at 0 & 8665 Boca Ciega Dr
A RESOLUTION OF THE CITY OF ST. PETE BEACH, FLORIDA, AUTHORIZING CONDITIONAL USE PERMIT 25112 PURSUANT TO LAND DEVELOPMENT CODE SECTIONS 6.19. AND 19.2. FOR THE PHASE 1 AND 2 IMPROVEMENTS OF MASTER PUMP STATION 1 AT 0 AND 8665 BOCA CIEGA DR, WITH PARCEL NUMBERS OF 25-31-15-97686-000-0010 AND 25-31-15-95202-000-0050; PROVIDING FOR CORRECTION OF SCRIVENER'S ERROR AND AN EFFECTIVE DATE.

Motion Options: Motion to [approve/approve with conditions/deny/continue to [date certain]] Resolution 2025-28.

c. Resolution 2025-29: Live Local Act Property Tax Exemption
A RESOLUTION OF THE CITY OF ST. PETE BEACH, PINELLAS COUNTY, FLORIDA, PURSUANT TO SECTION 196.1978(3)(o), FLA. STAT., ELECTING TO NOT EXEMPT PROPERTY FROM AD VALOREM PROPERTY TAX UNDER SECTION 196.1978(3)(d)1.a., FLA. STAT., COMMONLY KNOWN AS THE "LIVE LOCAL ACT PROPERTY TAX EXEMPTION"; PROVIDING FOR INCORPORATION OF RECITALS, REQUIRED FINDINGS, DIRECTION TO THE MAYOR, DIRECTION TO THE CITY MANAGER, APPLICABILITY, SEVERABILITY, AND A CONDITIONAL EFFECTIVE DATE.

Motion Options: Motion to [approve/approve with modifications/deny/continue to date certain of [specify date]] Resolution 2025-29.

d. Approval of Settlement Agreement and Amended Development Order – Red, White & Booze, LLC
Approval of a Settlement Agreement and Release with Red, White & Booze, LLC, Charles L. Collom, and Helen Collom, and approval of an amended Development Order associated

with Conditional Use Permit No. 23034.

Action Request: Motion to approve the Settlement Agreement and Release with Red, White & Booze, LLC, Charles L. Collom, and Helen Collom, and approve the associated Amended Development Order for Conditional Use Permit No. 23034

7. Items for Discussion -
8. City Clerk, City Manager, City Attorney and City Commission Reports -
9. Adjournment -

APPEAL: In accordance with 286.0105, Florida Statute (Notices of meetings and hearings must advise that a record is required to appeal), if a person decides to appeal any decision made by this committee, board, agency, or commission with respect to any matter considered at this meeting or hearing, he or she will need a record of the proceedings, and that, for such purpose, he or she may need to ensure that a verbatim record of the proceedings is made, which record includes the testimony and evidence upon which the appeal is to be based.

AMERICANS WITH DISABILITIES ACT (ADA): In accordance with the Americans with Disabilities Act and Florida Statutes, if any person with a disability defined by the ADA needs special accommodation to participate in this proceeding, then not later than two business days prior to the proceeding, he or she should contact City Hall at (727) 367-2735.

PUBLIC COMMENT INSTRUCTIONS FOR THOSE NOT PHYSICALLY PRESENT:
The City has made accommodations for those who cannot be physically present or do not feel comfortable appearing in person. If a member of the public would like to provide comments for the meetings, they may do so in the following ways:

- Email the City Clerk by 12:00 p.m. on the day of the meeting at cityclerk@stpetebeach.org
- Leave a voicemail message by calling **727.363.9225** by 12:00 p.m. the day of the meeting

In your three (3) minute or less comment, please be sure to include your name and address for the record.

The public is cordially invited to attend this meeting.
All agenda material is available for review at City Hall or www.stpetebeach.org.

PROCLAMATION

Celebrating a Special Delivery

WHEREAS, on August 21, 2025, Firefighter/Paramedic Ty Ulevich, Firefighter/Paramedic Firefighter/Paramedic Max Lichtig, and Scott Burford of the St. Pete Beach Fire Department demonstrated exceptional professionalism, skill, and composure during an emergency medical incident involving a precipitous field delivery; and

WHEREAS, upon arrival, Firefighter/Paramedic Ulevich, Firefighter/Paramedic Lichtig and Firefighter/Paramedic Burford quickly assessed the situation and recognized the immediate need for advanced obstetric intervention; and

WHEREAS, their swift actions, teamwork, and compassionate care directly contributed to the safe delivery and well-being of both mother and newborn; and

WHEREAS, the Pinellas County EMS Medical Director and the Director of EMS & Fire Administration formally commended both members for their exemplary performance and dedication to patient care; and

WHEREAS, the lifesaving efforts of Firefighter/Paramedic Ulevich and Firefighter/Paramedic Burford reflect great credit upon themselves, the St. Pete Beach Fire Department, and the Pinellas County EMS System; and

NOW, THEREFORE, BE IT RESOLVED, that Firefighter/Paramedic Ty Ulevich, Firefighter/Paramedic Max Lichtig and Firefighter/Paramedic Scott Burford are hereby recognized and commended for their outstanding service, clinical excellence, and unwavering commitment to public safety. Their actions are a true testament to the professionalism and dedication of our emergency services.

IN WITNESS WHEREOF, I have here unto set my hand and caused the great Seal of the City of St Pete Beach, Florida, to be affixed this ____ day of _____ 2025.

_____

Adrian Petrila, Mayor

Hurricane Helene Damage

Merry Pier Bait Shack Direction

December 9, 2025

St. Pete Beach

The Sunset Capital of Florida

Merry Pier Bait Shack

- 801 Pass-a-Grille Way
- Not Designated Historic
- Substantially Damaged (100%)

St. Pete Beach
The Sunset Capital of Florida

Merry Pier Bait Shack

- Appraised Value $210,000
- Rebuild Cost $210,682
  - Does not include design & permitting
- Insurance Payout $82,121
- Demolition Cost $65,688
- FEMA under review
  - Insurance funding would be deducted from any FEMA public assistance funding

St. Pete Beach
The Sunset Capital of Florida

Rebuild Considerations

- FEMA 50% Rule
- High-Risk Coastal Area (VE Flood Zone)
- Flood Proofing Required
- Permitting
  - City of St. Pete Beach
  - Florida Department of Environmental Protection
  - Pinellas County

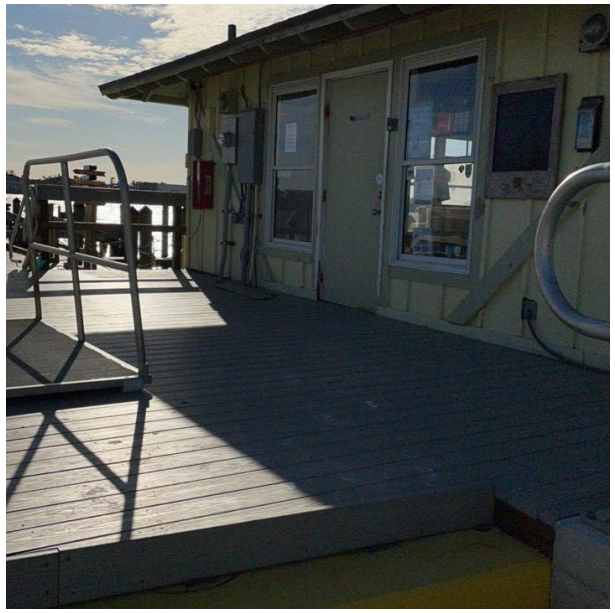

St. Pete Beach
The Sunset Capital of Florida

Path Forward

- Staff seeks City Commission direction on next steps
  - Option A: Demolition and no rebuild
  - Option B: Selective demolition and rebuild per codes and standards
- Cost Summary
  - Demo cost = $65,688
  - Rebuild estimate = $250,000
  - Current budget = $144,650
- Decision needed to renew submerged land lease with FDEP

St. Pete Beach
The Sunset Capital of Florida

House Relocation to Pass-a-Grille Park

St. Pete Beach

The Sunset Capital of Florida

What Do We Know?

- Homeowner willing to donate a wood framed home, circa 1925
- The home is not currently designated historical but is considered a contributing structure
- Between Insurance and Capital Improvement Plan the City has earmarked $177k toward the Shuffleboard
- The City has demo quotes for $8k
- The City has rebuild quote for like structure for $193k
- Written quote from community for $162k to relocate and build foundation for residential use (not inclusive of all expenses required)
- City has received insurance quote of $12k minimal increase to annual premiums (if designated historical, estimate will increase)
- Shuffleboard club initial ask was a place to store equipment and restroom if possible

What We Don’t Know

- If we were to move to a temporary location, we don’t know what that entails (i.e. property acquisition, rental fees, ability to insure)
- Source of funding shortfall
- Level of community support (have not completed formal outreach)
- Intended final use of structure
- Current condition of 100-year-old structure to be moved (although beautifully renovated)
- Ongoing operations and maintenance costs

St. Pete Beach
The Sunset Capital of Florida

Site Overview

<u>103 24th Ave.</u>

- 1,440 sq. ft.
- Overall Dimensions, 40' x 40'
- Constructed in 1925

<u>Shuffleboard Building</u>

- 429 sq. ft.
- Overall Dimensions, 33' x 13'

St. Pete Beach
The Sunset Capital of Florida

Additional Considerations

St. Pete Beach
The Sunset Capital of Florida

Park Site – Current Condition

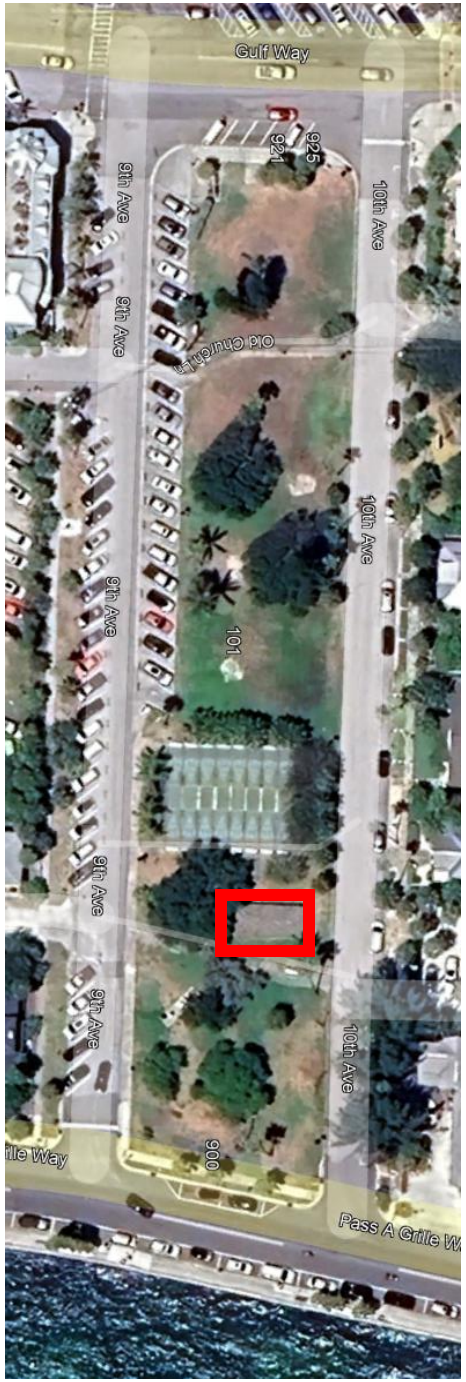

St. Pete Beach
The Sunset Capital of Florida

Park Site and Structure

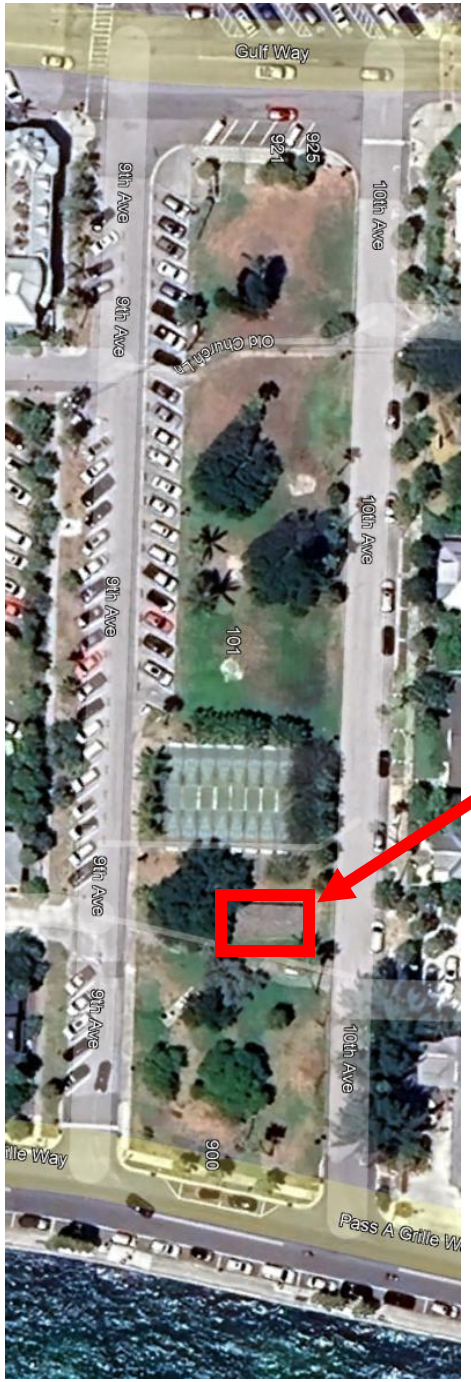

St. Pete Beach
The Sunset Capital of Florida

House Site and Structure Elevations/Interior

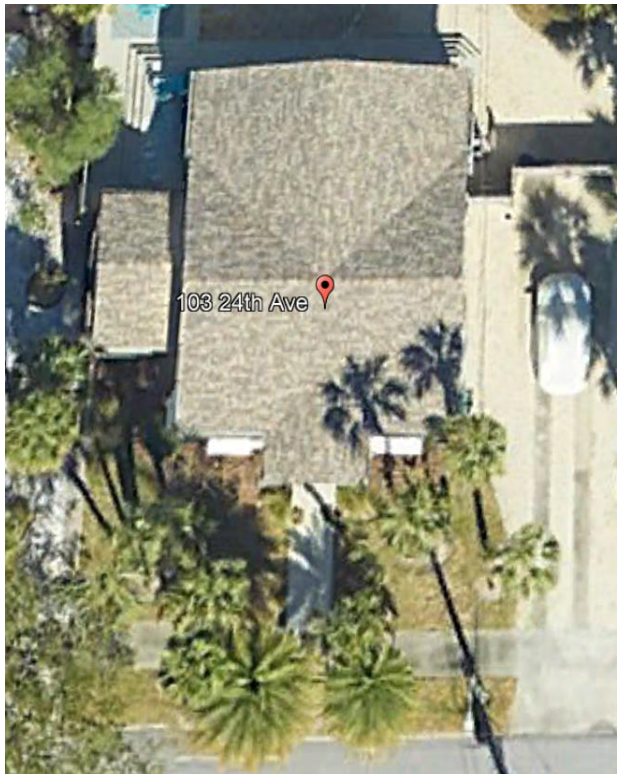

*Interior Images- Zillow

St. Pete Beach
The Sunset Capital of Florida

Actions Before Relocation

Historic

- Local Historic Designation required (LDC Sec. 28.19)
- Certificate of Appropriateness for issuance of a moving permit (LDC Sec. 28.8 and 28.12)
- Both issued by the Historic Preservation Board

Building

- Inspection completed by engineer to assess the structure's current condition, evaluate all existing systems and determine feasibility of relocation
- Surveying and Construction Layout
- Demolition/Utility Disconnects

St. Pete Beach
The Sunset Capital of Florida

Actions Needed Before Relocation/Placement

Prior to Relocation – General Building

Two Building Permits Required:

- Relocation
  - Surveying and construction layout, site plan
  - Temporary Placement of Structure (if necessary)
    - Securing the structure
- Permanent Placement of Structure
  - Building Permit Application submission to include:
    - Complete plan set including but not limited to survey/site plan with proposed structure, dimensions and setbacks, elevations, show any modifications, HVAC, plumbing, electrical, etc. and pre-construction Elevation Certificate showing the elevation of the structure.
    - Accessibility (ADA) improvements as per Florida Building Code (not to exceed 20% of total improvements/repairs).
    - Site Work

St. Pete Beach
The Sunset Capital of Florida

Sarasota Historical Structure Example

- Cost: $425,613.01 (2022 dollars with some services donated)
- Timeline: 2 years planning, 1 year construction

Sarasota Project Example (Three Phases)

Scope of Work	Cost to City	Notes
Architectural Design	$ 15,765.00	Discounted services
Engineering & Landscape Architect Design	$ -	Donated services
Permitting	$ 5,015.10	
Structural Inspections (Pre & Post Move)	$ 2,424.80	
House Relocation	$ -	Provided by previous owner
Building Foundation Pad	$ 8,941.25	3-foot pad elevation
Civil Site Development	$ 187,785.09	ADA accessibility, parking, stormwater, tree removals
Landscaping	$ -	Donated materials and City staff install labor
Utilities & Site Lighting	$ 42,256.66	Potable water and sanitary sewer connections, lighting per code
Building Improvements	$ 163,416.11	HVAC, electrical, fire prevention, limited structural
TOTAL	**$ 425,613.01**	

Timeline and Funding

Deliverable	Estimated Timeframe	Estimated Cost
Commission Decision	12/9/2025	Staff Time
Historic Preservation Board Approvals	6-8 weeks	Staff Time
Construction Site Design Planning and Permitting	6 months	$40,000
RFP Procurement	90 days from scope development	Staff Time
House Relocation and Site Preparation	3 months	$162,000
Site Improvements	6 months	$250,000*
Building Improvements	3 months	$200,000*
Project Closeout	1 month	Staff Time
TOTAL	**24 months**	**$652,000 + Staff Time**

Summary

- Soonest we could have house moved off current property is 14 months
- Estimated date we could have structure ready for public use is 24 months
- Estimated $475,000 delta to fund project
- Many variables (i.e. utilities and obstacles) of a project of this nature providing an accurate cost/time estimate is difficult to provide at this time
- Significant utilities and obstacles required to safely move

St. Pete Beach
The Sunset Capital of Florida

Path Forward

- Staff seeks City Commission direction on next steps moving forward

St. Pete Beach
The Sunset Capital of Florida

AJS Building Moving & Leveling
17333 Squirrel Prairie Road
Brooksville, Florida 34604-6936
O: 813-501-0099
July 9, 2025

BUDGET ESTIMATE

Adrianna Nora
602 Pass a grill Way
St. Pete Beach FL 33706

adriannan93@gmail.com
(651)468-6778

Relocate a single-family residence, historical home, presently located at 103 24th Avenue St. Pete Beach FL 33706 to a lot at 602 Pass a grill Way St. Pete Beach 33706. The structure is wood frame on wood floors.

Cost includes AJS Scope of work:

1. Relocating structure from 24th Avenue, St. Pete Beach to Pass a grill Way in St. Pete Beach.
2. Prepping house to load for moving including cutting off the side room to move it separately.
3. Provide engineering for new foundation.
4. Removing old foundation from 24th Avenue South location only.
5. Supplying permanent steel.
6. At new location: Elevate house 10' to 12'.
7. Supplying and installation of helical piles.
8. Provide foundation of open columns (no solid walls).
9. Provide slab under elevated structure.
10. Clean up AJS debris and remove from site.

All of the above for cost to Owner of $162,000.00.

AJS can supply these extras not included in their scope of work:

1. Stairs & 4'x6' deckspressure treated wood $30,000.00.
2. Soil Testing $ 3,000.00.

Initial _____ Date_____

Owner is responsible for:

1. Contract with architect direct.
2. Comply with any requirements by the Historical Society.
3. Road right of way, any overhead wires that need to be lifted or taken down.
4. Any traffic signals involved.
5. Any right of way property involved. Obtain authorization to use.
6. Removal, replacement or trimming of any trees at both locations and on the moving route.
7. All permits.
8. Disconnects-reconnects of any/all utilities and HVAC systems.
9. Any fill dirt needed.
10. Provide Contractor to reattach roof on side room at new location.
11. Architecture, surveys, elevation certificates.
12. Complete project after AJS scope of work is finished and receive a certificate of occupancy.

AJS is licensed, bonded and insured.

Once you have decided to move forward with AJS we will have a site visit including inspection of the route and any obstacles and requirements. We will expect a deposit in the amount of $24,300.00 to start engineering and paper work for building permit.

Thank you for considering AJS in your possible upcoming project.

Sincerely yours,
Michael D. Knapp
President

Initial _____ Date_____

CITY COMMISSION MEETING
CITY OF ST. PETE BEACH
COMMISSION CHAMBERS

Agenda Report

Agenda Title Name: Approval of the Corey Avenue Business Association Temporary License Agreement Renewal for the Corey Avenue Sunday Market.

Action Request: Motion to approve the Temporary License Agreement Renewal for the Corey Avenue Sunday Market.

Strategic Objective: Community Prosperity

Date: December 16, 2025

Prepared By: Mandy Edmunds, Operations Manager

Through: Frances Robustelli, City Manager

Summary of Issue: The Corey Avenue Business Association is requesting approval for the renewal of its Temporary License Agreement to operate the Corey Avenue Sunday Market for the 2026 season. The Licensee has submitted all required documentation, including the site plan, hold harmless agreement, certificate of insurance, and the annual market application. As part of the agreement, the Licensee pays the City a monthly fee of $200. The market operates every Sunday from 10:00 a.m. to 2:00 p.m. Approval of this renewal will allow the continued operation of the weekly market under the terms previously established by the City. The term of this renewal agreement will commence on January 1, 2026 and shall terminate on December 31, 2026.

Funding: This event is funded by the Corey Avenue Business Association and a monthly fee of $200 per month is paid to the City as stated in the Terms of Agreement dated January 28, 2025.

Attachments:

1. 2026 CABA Temporary License Agreement - renewal 1
2. 2026 CABA Sunday Market application

FIRST RENEWAL TO TEMPORARY LICENSE AGREEMENT FOR THE COREY AVENUE SUNDAY MARKET

THIS FIRST RENEWAL TO TEMPORARY LICENSE AGREEMENT (the "Renewal Agreement") is made and entered into this _3__ day of __November_____, 2025, by and between the CITY OF ST. PETE BEACH, FLORIDA, a Florida municipal corporation, with a principal office located at 155 Corey Avenue, St. Pete Beach, Florida 33706 (hereinafter the "City"), and the COREY AREA BUSINESS ASSOCIATION, INC., a Florida not-for-profit corporation, with a principal office located at 371 Corey Avenue, St. Pete Beach, Florida 33706 (hereinafter the "Licensee"). The City and Licensee shall be referred to collectively as the "Parties."

WHEREAS, the City and Licensee entered into that certain Temporary License Agreement dated January 28, 2025 (the "Agreement"), pursuant to which the City granted Licensee a temporary license to use certain City rights-of-way and public property along Corey Avenue to operate the Corey Avenue Sunday Market (the "Event"); and

WHEREAS, Section 4 of the Agreement provides that the license term may be renewed for up to three (3) additional one-year terms upon the same terms and conditions; and

WHEREAS, the Parties desire to renew the Agreement for the first one-year renewal term, maintaining all existing terms, covenants, and conditions; and

WHEREAS, Licensee has submitted the necessary updated application, site plan, hold harmless agreement, and certificate of liability insurance for the 2026 market season.

NOW, THEREFORE, in consideration of the mutual promises and covenants set forth herein and in the Agreement, and other good and valuable consideration, the sufficiency of which is hereby acknowledged, the Parties agree as follows:

1. TERM OF RENEWAL. The term of this Renewal Agreement (the "Renewal Term") shall commence on January 1, 2026, and shall terminate on December 31, 2026, unless otherwise terminated pursuant to the provisions of the Agreement.

2. INCORPORATION OF AGREEMENT TERMS. Except as specifically modified herein, all terms, covenants, and conditions of the Temporary License Agreement dated January 28, 2025, shall remain in full force and effect during this Renewal Term. All defined terms in the original Agreement shall have the same meanings herein.

3. EXHIBITS. The following documents are attached hereto, incorporated herein by reference, and collectively constitute Exhibit A through Exhibit D of this Renewal Agreement:

• Exhibit A – 2026 CABA Sunday Market Application

• Exhibit B – 2026 Site Plan

• Exhibit C – 2026 Hold Harmless Agreement

• Exhibit D – 2026 Certificate of Liability Insurance

4. EFFECTIVE DATE. This Renewal Agreement shall become effective upon full execution by the Parties.

IN WITNESS WHEREOF, the Parties hereto have executed this First Renewal to the Temporary License Agreement on the day and year first above written.

CITY OF ST. PETE BEACH, FLORIDA

By: _____
Frances Robustelli, City Manager

ATTEST:

_____
Renee Rose, City Clerk

APPROVED AS TO FORM AND LEGAL SUFFICIENCY:

_____
Ralf Brookes, City Attorney

COREY AREA BUSINESS ASSOCIATION, INC.

By: _____
Ken Hautmann, President
Date: 11/17/25

Exhibits:
Exhibit A – 2026 CABA Sunday Market Application
Exhibit B – 2026 Site Plan
Exhibit C – Hold Harmless Agreement
Exhibit D – Certificate of Liability Insurance

St. Pete Beach
The Sunset Capital of Florida

City of St. Pete Beach Event Application

Applicant

Name of Applicant: Ken Hautmann Title (If applicable): President

Name of Organization (if applicable): Corey Avenue Business Associatin (CABA)

Tax Exempt? ☑ Yes ☐ No Non-Profit? ☑ Yes ☐ NO *If yes on either, please provide documentation*

Mailing Address: 363 Corey Avenue, St. Pete Beach, FL 33706

Cell Phone: 727-698-6014 Email: ken@chillstpetebeach.com

Event Information

Event Title: Corey Avenue Sunday Market Event/Organization Web Address: coreyave.com

Event Location(s): Corey Avenue between Boca Ciega Drive and Gulf Blvd

If location is private property, a letter giving permission for the event to take place on the property must be included with the application.

Event Date(s) & Time(s)

Date	Day of the Week	Start Time	End Time
Every Sunday 2026	Sunday	10:00 AM	2:00 PM

Set Up Date(s): Every Sunday Time(s) 7:00 AM to 10:00 AM

Cleanup Date(s): Every Sunday Time(s) 2:00 PM to 4:00 PM

Description of Event: Weekly Sunday Market

Will this be an Annual Event? ☑ Yes ☐ No If yes, next year's date(s): Every Sunday 2027

Event Logistics

Estimated Attendance 500 500
(includes event crew, participants, and spectators) This Year Last Year (if Applicable)

Under City Ordinance Section 26-33 any special event which is consists of 250 or more persons or the event is a sports related may require standby Emergency Medical Services (EMS) personnel, vehicle(s) and equipment. See Page 10 of the Event Guide for more on EMS service requirements.

The EMS and fire vehicle fees are listed below:

Fees for off-duty fire department personnel special detail (minimum of 3 hours):	$50.00
Special event fire vehicle per hour per vehicle (minimum of 3 hours):	$25.00

List all event activities:_____

Electricity Needed ☑ Yes ☐ No Source: City electric boxes on Corey Avenue

Will portable restrooms be used? ☑ Yes ☐ No If yes (include on site plan): One ADA compliant toilet for every 10 per location

Will Dumpsters be used? ☐ Yes ☑ No If yes *(include on site plan)*
How Many?_____ Size:_____ Installation Date:_____ Removal Date:_____

Entertainment (Detail type, bands, DJs, dancers, clowns, etc)_____

Parking Plan *(please be detailed and include on site map)*: See Attached. Ride Sharing will be encouraged

Food and Beverage:

Will alcohol be served or sold? ☐ Served ☐ Sold ☑ No Alcohol

Will there be food trucks? ☐ Yes ☑ No
All food trucks must be registered with the city.

If yes, please list the truck/trailer vendors

1. _____ St Pete Beach Food Truck Permit #_____
2. _____ St Pete Beach Food Truck Permit #_____
3. _____ St Pete Beach Food Truck Permit #_____
4. _____ St Pete Beach Food Truck Permit #_____

If you need additional space to list more food trucks please attached an additional sheet listing name of truck and the permit number.

Other Food Vendors that are not a truck or trailer

_____

List all other vendors (art, crafts, clothes, etc) See Attached

Event Equipment – All equipment below other than a 10x10 tent requires a temporary structure permit. Please include the temporary structure permit for each piece of equipment listed below with the event application.

Tents: *Please list number of tents and size of each and include location on the site plan.*

Each vendor will have a 10x10 tent.

Stage/Platforms: Please list dimensions, scaffolding, etc and include location on the site plan.

All temporary structures that cover an area greater than 120 sq. ft. including connecting spaces with a common area means of egress or entrance that are used for the gathering together of 10 or more persons shall not be erected, operated, or maintained for any purpose without obtaining a permit from the Building Official. The application should include a site plan indicating the location of the structure and information delineating the means of egress and the occupant load. FBC 3103. The Building Official gives permission to temporarily supply and use power in part of an electric installation before such installation has been fully completed and the final certificate of completion has been issued. All temporary power must comply with FFPA 70 NEC Article 590.

Vehicle on the Beach Permits

Do you need to have a vehicle on the beach for your event? ☐ Yes ☑ No

If Yes, please include a vehicle on the beach permit application with the event application

Street Closures

Does Event require any Road or Sidewalk Closures? ☑ Yes ☐ No

If yes, you must include **all the details** in the **site plan** including streets and times

Road	Start Intersection	End Intersection	Date	Times
Corey Avenue	Gulf Blvd	Boca Ciega Blvd	See Addendum A	6am to 5pm
Blind Pass	75th Avenue	73rd Avenue	See Addendum A	6am to 5pm

Signage/Banners – Please list number, size and placement of each banner that you plan to use to promote the event. If requesting to hang a banner over 75th Ave, a FDOT permit is required and request must be made at least 90 days before the event.

City Equipment – Please indicate the number needed for your event, if none, please put a zero (0).

8 Barricades

____ Cones

20 Trash Bins

As the Applicant, I hereby accept and understand the responsibility to oversee all contractors, vendors, or parties affiliated with the event and to insure compliance with the special event guide, the event rules guidelines, requirements for tents and all policies, rules, regulations, and code provisions of the City of St. Pete Beach. I understand that any violations may result in immediate cancellation and revocation of the Event permits. I further certify that all the facts contained in this request are accurate.

No advertising for the event shall occur until this Special Event permit has been approved by City staff and Commission.

If any information is found to be false, incomplete or misrepresented, such fact is just cause for the immediate revocation of any permit issued. In addition, failure to correct any on-site conditions or code violation as identified by City Staff will result in revocation of the permit and/or code enforcement fines.

For events on Public property, I agree to obtain and furnish the City of St. Pete Beach with a certificate of general liability insurance in the amount of at least one million dollars ($1,000,000) or greater as deemed satisfactory by the city. The insurance must name the City of St. Pete Beach as an additional insured.

I understand incomplete application or any outstanding financial obligations with any department with in the City of St. Pete Beach may result in a denial of my request.

Ken Hautmann

Print Name

Signature

CABA

Corporation Name (if applicable)

October 28th, 2025

Date

EVENT APPLICATION FEES

Up Type IA events: St Pete Beach Resident/Business that does not require site plan review, on-site inspections or other city services, does not require additional permits from other governmental agencies and will occur for not more than three consecutive days.
Type IB events: Non-Resident/Business that does require not require site plan review, on-site inspections or other city services, does not require additional permits from other governmental agencies and will occur for not more than three consecutive days.
Type IIA events: St Pete Beach Resident/Business that does require Business that does require site plan review, on-site inspections, city services and/or additional permits from other governmental agencies.
Type IIB events: Non-Resident/Business that does require Business that does require site plan review, on-site inspections, city services and/or additional permits from other governmental agencies.

Type III Events: include any event which cannot be reviewed under subparagraphs (a) or (b) of this section.

Attendance	Type IA	Type IB	Type IIA	Type IIB	Type III
Up to 249	$25.00	$50.00	$75.00	$100.00	TBD
250-500	$50.00	$100.00	$250.00	$350.00	TBD
501-999	$75.00	$150.00	$500.00	$650.00	TBD
1000+	$100.00	$200.00	$750.00	$1,000.00	TBD

OTHER FEES

Temporary Structure, Outdoor Cooking and Beach Fire permits are $25 per permit.
Vehicle on the Beach permits is $15. Food Truck/Trailer permit is $170 annually
Fire Department stand – by is $125 per hour with a minimum of 3 hours (1 crew and vehicle)

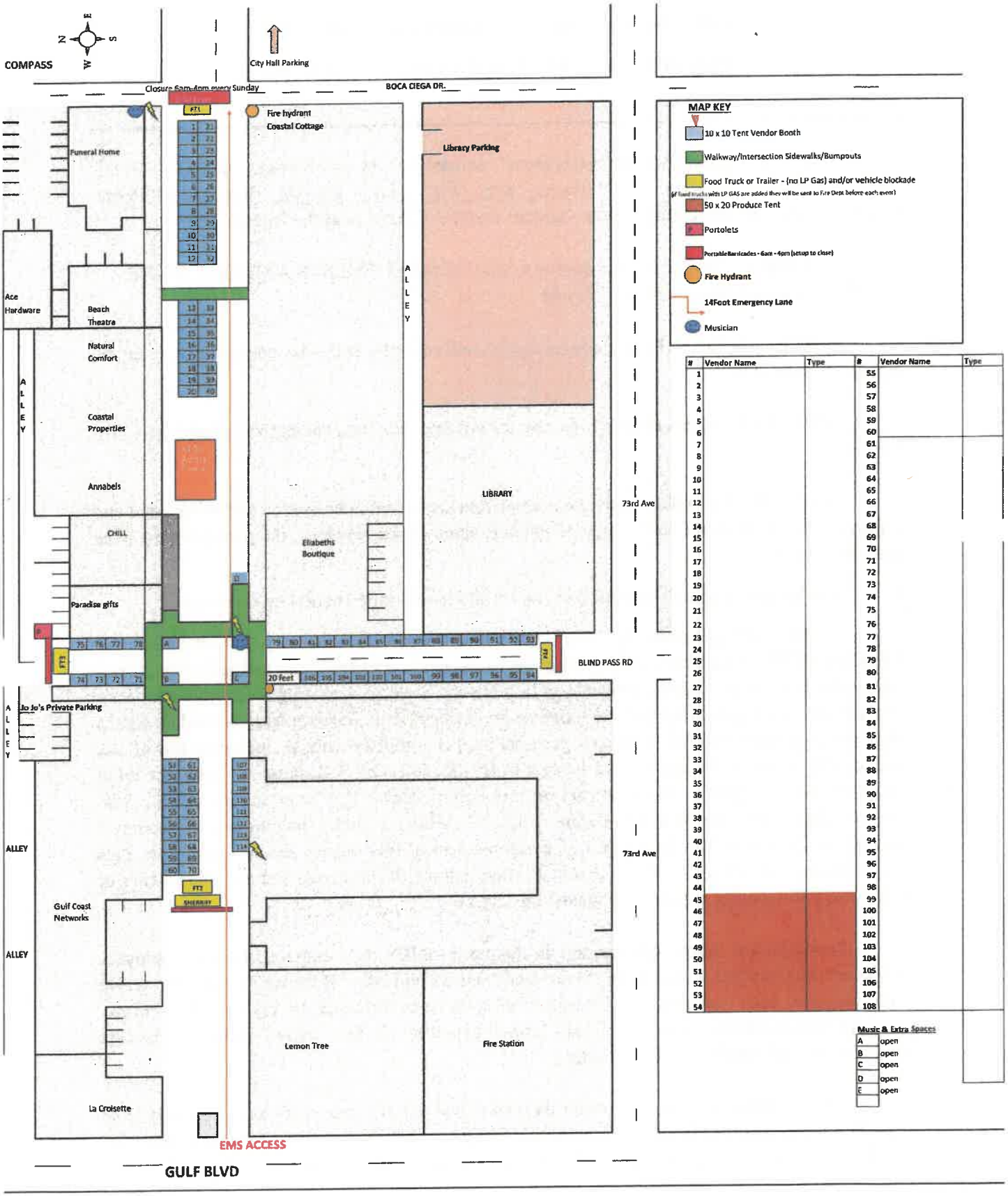

#	Vendor Name	Type	#	Vendor Name	Type
1			55		
2			56		
3			57		
4			58		
5			59		
6			60		
7			61		
8			62		
9			63		
10			64		
11			65		
12			66		
13			67		
14			68		
15			69		
16			70		
17			71		
18			72		
19			73		
20			74		
21			75		
22			76		
23			77		
24			78		
25			79		
26			80		
27			81		
28			82		
29			83		
30			84		
31			85		
32			86		
33			87		
34			88		
35			89		
36			90		
37			91		
38			92		
39			93		
40			94		
41			95		
42			96		
43			97		
44			98		
45			99		
46			100		
47			101		
48			102		
49			103		
50			104		
51			105		
52			106		
53			107		
54			108		

CITY OF ST. PETE BEACH

HOLD HARMLESS AGREEMENT AND RELEASE

FOR SPECIAL EVENT AND STREET CLOSURES

This is an Agreement (the "Agreement") entered into by and between the CITY OF ST. PETE BEACH (hereinafter "CITY") and Corey Arabiz Assoc (hereinafter "Permit Holder"). The City and Permit Holder together shall be referred to as the "parties."

WHEREAS, Permit Holder desires to host SPECIAL EVENTS AND/OR STREET CLOSURES as provided by the CITY; and

WHEREAS, Permit Holder desires to host said activities and acknowledges that it may be subject to risks; and

WHEREAS, Permit Holder is willing to host said activities and agrees to hold the CITY harmless.

NOW, THEREFORE, upon the mutual covenants contained herein, and other good and valuable consideration, the sufficiency of which is hereby acknowledged, the parties hereto agree to the following:

1. The foregoing recitals are true and correct and incorporated herein by reference.

2. To the extent permitted by law, Permit Holder agrees to indemnify, hold harmless and defend the CITY, its members, officers, employees, agents, and assigns from and against all losses, claims, damages, suits, actions, demands, or liability and expense, including reasonable attorney's fees and costs of litigation through all appellate proceedings in connection with any and all claims whatsoever including but not limited to; personal injuries, property damage, including loss of use, or equitable relief, including but not limited to injunctive relief or declaratory judgment relief caused by the negligent or deliberate act or omission of Permit Holder or anyone else for who Permit Holder's acts may be liable. Permit Holder's liability hereunder shall include all attorneys' fees and costs incurred by the CITY in the enforcement of this indemnification provision. This provision includes claims made by Permit Holder, patrons of the event, and any other entity or individual participating in the event against the CITY.

3. Permit Holder hereby releases and discharges the CITY, its members, officers, employees and agents (hereinafter, collectively "Releasees" and individually "Releasee") from, and waive with respect to each Releasee, and covenants not to sue any Releasee for any and all liabilities, damages and expenses, including but not limited to attorney's fees, of any nature whatsoever arising from participation in said activities.

4. Permit Holder acknowledges that they have had a full opportunity to review this Hold Harmless Agreement and Release, have read and understand this Release, and have the opportunity for this Hold Harmless Agreement and Release to be reviewed by their attorney if desired. Permit

Holder further acknowledges and represents that they, the undersigned, have full authority to execute this Hold Harmless Agreement and Release, and are bound by this Hold Harmless Agreement and Release.

5. Permit Holder freely and voluntarily assumes all risk of loss or injury arising from hosting said activities whether due to their negligence or the negligence or intentional acts of others.

6. Permit Holder agrees not to represent themselves as a CITY employee or CITY affiliate.

7. Both parties agree to comply with all federal, state, and other applicable laws. Nothing herein shall be construed as a waiver of sovereign immunity, or the limitations set forth in Section 768.28, Florida Statutes.

8. If any one or more of the provisions of this Hold Harmless Agreement and Release shall be held to be invalid, illegal or unenforceable in any respect, the validity, legality and enforceability of the remaining provisions hereof shall not in any way be affected or impaired thereby. The parties recognize that the Hold Harmless Agreement and Release has been the result of negotiations of both parties. This Hold Harmless Agreement and Release shall not be construed or interpreted in any way against any one party on the basis that party drafted this Hold Harmless Agreement and Release.

9. This Hold Harmless Agreement and Release and any extensions, amendments, or attachments related hereto are public records subject to Chapter 119, Florida Statutes.

10. This Agreement may be executed and delivered in any number of counterparts, each of which so executed and delivered shall be deemed to be an original and all of which shall constitute one in the same instrument.

IN WITNESS WHEREOF, the parties have executed this Agreement on the day and year set forth below.

Permit Holder	**City of St. Pete Beach:**
Signature:	Signature: aEdmunds
By: Kim Hartman	By: Amanda Edmunds
Date: 10/28/2025	Date: 10/28/25

CERTIFICATE OF LIABILITY INSURANCE

DATE (MM/DD/YYYY): 7/1/2025

THIS CERTIFICATE IS ISSUED AS A MATTER OF INFORMATION ONLY AND CONFERS NO RIGHTS UPON THE CERTIFICATE HOLDER. THIS CERTIFICATE DOES NOT AFFIRMATIVELY OR NEGATIVELY AMEND, EXTEND OR ALTER THE COVERAGE AFFORDED BY THE POLICIES BELOW. THIS CERTIFICATE OF INSURANCE DOES NOT CONSTITUTE A CONTRACT BETWEEN THE ISSUING INSURER(S), AUTHORIZED REPRESENTATIVE OR PRODUCER, AND THE CERTIFICATE HOLDER.

IMPORTANT: If the certificate holder is an ADDITIONAL INSURED, the policy(ies) must have ADDITIONAL INSURED provisions or be endorsed. If SUBROGATION IS WAIVED, subject to the terms and conditions of the policy, certain policies may require an endorsement. A statement on this certificate does not confer rights to the certificate holder in lieu of such endorsement(s).

PRODUCER
WWW Insurance, LLC
300 First Avenue South
Fifth Floor
St. Petersburg FL 33701

CONTACT NAME: Certificates
PHONE (A/C, No, Ext): 727-522-7777 FAX (A/C, No): 727-521-2902
E-MAIL ADDRESS: certificates@w3ins.com

INSURER(S) AFFORDING COVERAGE	NAIC #
INSURER A : Auto-Owners Insurance Co.	18988
INSURER B :	
INSURER C :	
INSURER D :	
INSURER E :	
INSURER F :	

INSURED COREARE-01
Corey Area Business Association Inc
P O Box 67393
St Pete Beach FL 33736

COVERAGES **CERTIFICATE NUMBER:** 611564050 **REVISION NUMBER:**

THIS IS TO CERTIFY THAT THE POLICIES OF INSURANCE LISTED BELOW HAVE BEEN ISSUED TO THE INSURED NAMED ABOVE FOR THE POLICY PERIOD INDICATED. NOTWITHSTANDING ANY REQUIREMENT, TERM OR CONDITION OF ANY CONTRACT OR OTHER DOCUMENT WITH RESPECT TO WHICH THIS CERTIFICATE MAY BE ISSUED OR MAY PERTAIN, THE INSURANCE AFFORDED BY THE POLICIES DESCRIBED HEREIN IS SUBJECT TO ALL THE TERMS, EXCLUSIONS AND CONDITIONS OF SUCH POLICIES. LIMITS SHOWN MAY HAVE BEEN REDUCED BY PAID CLAIMS.

INSR LTR	TYPE OF INSURANCE	ADDL INSD	SUBR WVD	POLICY NUMBER	POLICY EFF (MM/DD/YYYY)	POLICY EXP (MM/DD/YYYY)	LIMITS	
A	X COMMERCIAL GENERAL LIABILITY	Y		20441246	7/7/2025	7/7/2026	EACH OCCURRENCE	$ 1,000,000
	CLAIMS-MADE X OCCUR						DAMAGE TO RENTED PREMISES (Ea occurrence)	$ 50,000
							MED EXP (Any one person)	$ 5,000
							PERSONAL & ADV INJURY	$ 1,000,000
	GEN'L AGGREGATE LIMIT APPLIES PER:						GENERAL AGGREGATE	$ 2,000,000
	X POLICY PRO-JECT LOC						PRODUCTS - COMP/OP AGG	$ 2,000,000
	OTHER:							$
	AUTOMOBILE LIABILITY						COMBINED SINGLE LIMIT (Ea accident)	$
	ANY AUTO						BODILY INJURY (Per person)	$
	OWNED AUTOS ONLY / SCHEDULED AUTOS						BODILY INJURY (Per accident)	$
	HIRED AUTOS ONLY / NON-OWNED AUTOS ONLY						PROPERTY DAMAGE (Per accident)	$
								$
	UMBRELLA LIAB / OCCUR						EACH OCCURRENCE	$
	EXCESS LIAB / CLAIMS-MADE						AGGREGATE	$
	DED / RETENTION $							$
	WORKERS COMPENSATION AND EMPLOYERS' LIABILITY						PER STATUTE / OTH-ER	
	ANYPROPRIETOR/PARTNER/EXECUTIVE OFFICER/MEMBER EXCLUDED? Y / N (Mandatory In NH)	N / A					E.L. EACH ACCIDENT	$
	If yes, describe under DESCRIPTION OF OPERATIONS below						E.L. DISEASE - EA EMPLOYEE	$
							E.L. DISEASE - POLICY LIMIT	$

DESCRIPTION OF OPERATIONS / LOCATIONS / VEHICLES (ACORD 101, Additional Remarks Schedule, may be attached if more space is required)
City of St. Pete Beach is additional insured with respect to the General Liability if required by written contract, subject to terms, conditions, and exclusions of the policy.

CERTIFICATE HOLDER

City of St. Pete Beach
155 Corey Avenue
St. Pete Beach FL 33706

CANCELLATION

SHOULD ANY OF THE ABOVE DESCRIBED POLICIES BE CANCELLED BEFORE THE EXPIRATION DATE THEREOF, NOTICE WILL BE DELIVERED IN ACCORDANCE WITH THE POLICY PROVISIONS.

AUTHORIZED REPRESENTATIVE

© 1988-2015 ACORD CORPORATION. All rights reserved.

The ACORD name and logo are registered marks of ACORD

CITY COMMISSION MEETING
CITY OF ST. PETE BEACH
COMMISSION CHAMBERS

Agenda Report

Agenda Title Name: Approve the dedication of a memorial tree and bench, and authorize the renaming of the St. Pete Beach Library Community Room in honor of Bonnie Traiman.

Action Request: Motion to approve the dedication of a memorial tree and bench, and authorize the renaming of the St. Pete Beach Library Community Room in honor of Bonnie Traiman.

Strategic Objective: Community Prosperity

Date: December 16, 2025

Prepared By: Cathleen Bowley

Through: Frances Robustelli, City Manager

Summary of Issue: Bonnie Traiman, a beloved St. Pete Beach resident and dedicated Library employee, passed away in April 2025 after serving the City of St. Pete Beach with distinction for 24 years. During her long tenure, Bonnie championed literacy, supported lifelong learning, and brought warmth, humor, and kindness to Library operations. Her dedication helped make the Library a welcoming place for all patrons.

Following her passing, Library patrons, colleagues, and community members contributed more than $5,000 in donations to the Friends of the St. Pete Beach Library in Bonnie's memory. These contributions reflect the impact Bonnie had on residents, families, and generations of readers.

In recognition of her service and in response to requests from the Library, the Friends of the Library, and Bonnie's family, the City is considering several memorial tributes. The proposed memorials include:

- **Planting of a memorial tree** on Library grounds;
- **Installation of a memorial bench** with

commemorative plaque; and

- **Renaming of the Library Community Room** in honor of Bonnie Traiman.

These actions provide a lasting tribute to an employee who devoted more than two decades to public service, enriched the lives of countless residents, and helped build the Library's reputation as a welcoming, community-centered facility.

The Friends of the Library have committed to funding the tree, bench, and associated memorial elements using donations received in Bonnie's name. The renaming of the Community Room seeks approval by the City Commission in accordance with City best practices for naming public facilities.

Funding:

There is no fiscal impact to the City beyond routine maintenance of City-owned property.

Attachments:

CITY COMMISSION MEETING
CITY OF ST. PETE BEACH
COMMISSION CHAMBERS

Agenda Report

Agenda Title Name: Accept Expenditures for Emergency and Repairs FY2025 For Hurricane Helene and Hurricane Milton

Action Request: Motion to accept Expenditures for Emergency and Repairs FY2025 For Hurricane Helene and Hurricane Milton

Strategic Objective: Operational Excellence

Date: December 16, 2025

Prepared By: Devon Schmidt, Director of Finance

Through: Frances Robustelli, City Manager

Summary of Issue:

Background

On September 26, 2024, Hurricane Helene impacted St. Pete Beach, followed by additional effects precipitated by Hurricane Milton on October 9, 2024. Debris removal and related response activities notably continued into FY2025 and will continue into future fiscal years. During the declared state of emergency, Section 2-299 of the City Charter allowed for the suspension of normal procurement procedures, enabling emergency procurement of goods and services using the most efficient and effective methods to address clear and present dangers to public health, safety, welfare, or to prevent substantial loss to the city.

Per the Charter, the City Commission must be notified after the fact of any emergency procurements exceeding $25,000. At the April 22, 2025, meeting, staff presented expenditures amounting to $6,225,059 to date. For Hurricane Milton, and expenses amounting to $761,747 as of April, in response to the disaster and recovery efforts. Since April, contracts for repair, replacement or resiliency mitigation exceeding $25,000 have been brought to the Commission for approval. This report outlines all expenditures to date.

The high-level Summary of Expenditures:

The attached report details all expenditures related to Hurricanes Helene and Milton, including emergency

response and subsequent repairs, through FY2025. Key highlights include:

Hurricane Helene (Event Date: September 26, 2024)

Total Expenditures: $9,837,969.95

Major Categories:

- Debris removal and disposal
- Emergency repairs to city infrastructure and facilities
- Equipment, supplies, and contracted services for response and recovery
- Support for emergency personnel

Notable Vendors/Contracts:

- Aftermath Disaster Recovery
- Cotton Commercial
- Kimley-Horn (engineering and assessment)
- Smith Fence Company
- J & L Sanchez Inc.
- Numerous local suppliers for materials, fuel, and services

Hurricane Milton (Event Date: October 9, 2024)

Total Expenditures: $2,577,543.07

Major Categories:

- Debris removal and site cleanup
- Emergency repairs and restoration
- Equipment and materials for storm recovery

Notable Vendors/Contracts:

- Cotton Commercial
- Kimley-Horn
- Smith Fence Company
- Left Coast Utilities
- Four Seasons Maintenance

- Multiple local suppliers

Procurement Compliance

During the declared state of emergency, normal procurement procedures were suspended as permitted by Section 2-299 of the City Charter. Emergency procurement methods were used to ensure a timely and effective response. All procurements exceeding $25,000 are included in the attached report for Commission notification, as required.

Funding:

The City has received $3.9 million for Category A (debris) from FEMA, as well as $2.8 million in insurance proceeds related to property damages. As noted in the FY2026 budget, the City had reserve funding to cover expenditures. Staff continues to work with FDEM on recovery of damage expenditures the City has advanced 90% of projects past Phase 2. In addition, the Commission approved the Florida Department of Commerce Bridge Loan as an additional cushion for the City as it works through the actual effects of a decrease in operating revenues in the General Fund and Wastewater Utility.

Attachments:

1. Helene and Milton Expenditures

HURRICANE HELENE EXPENSES

Description	Reference	Period	Posting Date	Set ID	Expense
C.A.P. GOVERNME Professional S	0170780 (2)	12	09/30/2025	OH012034	960
COTTON COMMERCI Hurricane Hele	2	12	09/30/2025	OH012015	97,796
KIMLEY-HORN HURRICANE HELE	33448667	12	09/30/2025	OH012202	6,060
KIMLEY-HORN HURRICANE HELE	33495743	12	09/30/2025	OH012203	5,826
KIMLEY-HORN Storm damage t	33496657	12	09/30/2025	OH012161	4,828
XYLEM WATER SOL Quote #R2025-A	3556D91781	12	09/19/2025	OH012133	15,022
WILLIAMS SCOTSM AGREEMENT NUMB	9024506399	12	09/03/2025	OH012227	5,813
WILLIAMS SCOTSM AGREEMENT NUMB	9024509505	12	09/03/2025	OH012226	1,199
KIMLEY-HORN Storm damage t	33105878	11	08/31/2025	OH011711	4,828
HARBOR FREIGHT TOOLS 399	PCARDAUG 25	11	08/30/2025	JE002238	300
RESTAURANT EQUIPMENT STOR	PCARDAUG 25	11	08/30/2025	JE002238	2,497
SCP - 55	PCARDAUG 25	11	08/30/2025	JE002238	778
THE HOME DEPOT #6364	PCARDAUG 25	11	08/30/2025	JE002238	759
VCS ENGINEERING Update the map	5282	11	08/26/2025	OH011361	1,646
TK ELEVATOR COR Elevator Moder	1000717589	11	08/21/2025	OH011431	270,927
XYLEM WATER SOL Quote #R2024-A	3556D86628	11	08/14/2025	OH012134	6,871
SPRINKLERMATIC Replacement of	53217	11	08/13/2025	OH011890	7,312
GRAINGER INC. Reciprocating Sa	959903637	11	08/07/2025	OH011376	474
19P9-JPNJ-WM3H	JV000922	11	08/06/2025	JE002194	418
1TCL-KC4K-6PYF	JV000922	11	08/06/2025	JE002194	193
1WP1-WGJ3-7TRY	JV000922	11	08/06/2025	JE002194	125
1WP1-WGJ3-7TRY	JV000922	11	08/06/2025	JE002194	234
WILLIAMS SCOTSM Rental Period	9024312277	11	08/06/2025	OH011441	5,813
WILLIAMS SCOTSM Rental Period	9024314088	11	08/06/2025	OH011442	1,199
GRAINGER INC. Cordless Impact	9595959207	11	08/05/2025	OH011136	426
GRAINGER INC. Impact Socket Se	9596754961	11	08/05/2025	OH011132	54
HEYWARD FLORIDA HELEN DAMANGE	JH080425-SPB-1	11	08/04/2025	OH011215	33,400
KIMLEY-HORN HURRICANE HELE	32748053	10	07/31/2025	OH011311	1,803
KIMLEY-HORN JULY 2025	32747251	10	07/31/2025	OH012289	4,211
WALMART.COM 8009256278	PCARDJULY 25	10	07/30/2025	JE002246	31
WALMART.COM 8009256278	PCARDJULY 25	10	07/30/2025	JE002246	430
COTTON COMMERCI Hurricane Hele	CD1023362-1	10	07/23/2025	OH010861	628,462
TRADEMARK GARAG FEMA HURRICANE	12537-A	10	07/22/2025	OH011122	1,115
J & L SANCHEZ I FEMA HURRICANE	6805206418	10	07/15/2025	OH011154	900
JOE PAYNE INC Building, plan r	2389A	10	07/11/2025	OH010926	9,676
WILLIAMS SCOTSM Rental Period	9024116285	10	07/09/2025	OH011439	5,813
WILLIAMS SCOTSM Rental Period	9024118471	10	07/09/2025	OH011440	1,199
XYLEM WATER SOL Quote #R2024-A	3556D81373	10	07/02/2025	OH011585	8,396
XYLEM WATER SOL Quote #R2024-A	3556D81240	10	07/01/2025	OH011582	7,255
JOE PAYNE INC JUNE 2025	2389	09	06/30/2025	OH010925	134,993
KIMLEY-HORN HURRICANE HELE	32409648	09	06/30/2025	OH011109	3,725
KIMLEY-HORN SRVC THROUGH J	32408812	09	06/30/2025	OH010994	9,657
KIMLEY-HORN SRVC THROUGH J	32408813	09	06/30/2025	OH010995	6,639
KIMLEY-HORN SRVC THROUGH J	32409281	09	06/30/2025	OH010996	1,197
WALMART.COM	PCARDJUNE 25	09	06/30/2025	JE002237	62
WALMART.COM	PCARDJUNE 25	09	06/30/2025	JE002237	569
WALMART.COM	PCARDJUNE 25	09	06/30/2025	JE002237	660
SMITH FENCE COM REPLACE MAIN E	31935	09	06/24/2025	OH010519	12,555
SMITH FENCE COM FEMA HURRICANE	31937	09	06/20/2025	OH010444	1,850

J & L SANCHEZ I Contactor for	68052052	09	06/16/2025	OH011455	1,138
WILLIAMS SCOTSM Rental Period	9023922676	09	06/11/2025	OH011434	5,813
WILLIAMS SCOTSM Rental Period	9023925143	09	06/11/2025	OH011435	1,199
JOE PAYNE INC Building, plan r	2374	09	06/06/2025	OH010922	114,634
SRQ PEST MANAGE FEMA HURRICANE	21666	09	06/06/2025	OH010426	100
MOTOROLA SOLUTI Fire Station 2	8330305409	09	06/03/2025	OH010430	2,643
GRAINGER INC. FLEET SUPP REPLA	9526512158	09	06/02/2025	OH010911	989
KIMLEY-HORN engineering se	32077432	08	05/31/2025	OH010588	2,468
KIMLEY-HORN SRVC THROUGH M	32076206	08	05/31/2025	OH010991	1,796
KIMLEY-HORN SRVC THROUGH M	32076235	08	05/31/2025	OH010993	6,548
KIMLEY-HORN Storm damage t	32077431	08	05/31/2025	OH010587	27,770
CRUMPTON WELDIN Welding Helmet	1423250	08	05/30/2025	OH011129	593
XYLEM WATER SOL Lift Stations	3556D65746	08	05/29/2025	OH010199	85,992
IN PETER CAVALLI	PCARDMAY25	08	05/28/2025	JE002235	225
NIC -DEP FDEP PAYMENT	PCARDMAY25	08	05/28/2025	JE002235	50
BLUEMARK REALTY FEMA HURRICANE	BR25-126	08	05/27/2025	OH010196	1,500
LUXE FLUSH LLC Hurrica Helene	17548	08	05/27/2025	OH010583	51,700
LUXE FLUSH LLC Hurrica Helene	17549	08	05/27/2025	OH010581	51,700
LUXE FLUSH LLC Hurrica Helene	17590	08	05/27/2025	OH010579	122,020
LUXE FLUSH LLC Hurrica Helene	17601	08	05/27/2025	OH010580	236,340
LUXE FLUSH LLC Hurricane Helen	17604	08	05/27/2025	OH010582	236,340
THE CLEAN PLUMB Re-routing of	119597457	08	05/23/2025	OH010493	9,391
TRADEMARK GARAG FEMA HURRICANE	12443	08	05/23/2025	OH010349	400
J & L SANCHEZ I Due to Hurrica	68051972	08	05/20/2025	OH012231	5,500
XYLEM WATER SOL WO-00320749/RE	3556D75152	08	05/16/2025	OH011583	24,938
TOTAL PARKING S (4) 1 CALE CWT	107348	08	05/14/2025	OH010828	615
WILLIAMS SCOTSM Rental Period	9023726712	08	05/14/2025	OH011432	54,385
WILLIAMS SCOTSM Rental Period	9023728821	08	05/14/2025	OH011433	3,113
GORMAN COMPANY Feature Motor -	S020166950.001	08	05/06/2025	OH010854	3,811
J & L SANCHEZ I Temp FS22 cond	68051918	08	05/06/2025	OH011358	1,375
XYLEM WATER SOL Quote #R2024-A	3556D73688	08	05/06/2025	OH010147	4,158
AUTOMATION DIRE SW LS35 REPAIR	14316655_PRF	08	05/02/2025	OH009961	2,164
BRANDSTOLOVE/BLDABAR	PCARDAPRIL25	07	04/30/2025	JE002234	588
JOE PAYNE INC APRIL 2025	2360	07	04/30/2025	OH010932	30,019
JOE PAYNE INC APRIL 2025	2360	07	04/30/2025	OH010932	102,504
KIMLEY-HORN engineering se	31750692	07	04/30/2025	OH010058	4,665
KIMLEY-HORN HURRICANE HELE	31230291	07	04/30/2025	OH010039	8,978
KIMLEY-HORN HURRICANE HELE	31705567	07	04/30/2025	OH010056	3,713
KIMLEY-HORN Storm damage t	31750691	07	04/30/2025	OH010057	15,374
PERSONNEL SOLUT 04/06/25-04/12	117993	07	04/30/2025	OH011409	780
THE HOME DEPOT #6364	PCARDAPRIL25	07	04/30/2025	JE002234	189
THE HOME DEPOT #6364	PCARDAPRIL25	07	04/30/2025	JE002234	598
TIERRA INC Soil testing for De	47123E	07	04/30/2025	OH009738	8,946
J & L SANCHEZ I Pool pump and	6801896	07	04/29/2025	OH011465	925
SMITH FENCE COM FEMA HURRICANE	31836	07	04/29/2025	OH009889	2,423
SMITH FENCE COM Fence Replacem	31816	07	04/29/2025	OH010024	3,575
PERSONNEL SOLUT 04/20/25-04/26	118088	07	04/26/2025	OH011411	1,300
C.A.P. GOVERNME Professional S	170780	07	04/24/2025	OH010684	2,960
ROWLAND DE LLC 510 Belle Point	2162-182	07	04/24/2025	OH009857	14,882
DEGEORGE PAVING Approved concr	P004837	07	04/22/2025	OH009875	4,805
GOLDEN RAIN NUR BELLE VISTA RE	103663	07	04/22/2025	OH009790	127
PERSONNEL SOLUT 04/13/25-04/19	118053	07	04/19/2025	OH011413	1,300

CROWDER BROS HA 4" DMV FEMALE	5051	07	04/16/2025	OH009867	15
J & L SANCHEZ I Replacement of	68051818	07	04/14/2025	OH010193	31,850
JOE PAYNE INC Building Departm	2337	07	04/10/2025	OH009783	104,336
FORTS SERVICES Fire Station Su	4050	07	04/02/2025	OH010524	57,200
J & L SANCHEZ I Lazarello Park	6805168	07	04/02/2025	OH011356	1,095
ACLARIAN LLC MARCH 2025 HELENE	3253	06	03/31/2025	OH009700	4,900
KIMLEY-HORN engineering se	31230230	06	03/31/2025	OH009740	1,366
KIMLEY-HORN HURRICANE HELE	31399896	06	03/31/2025	OH009739	2,250
KIMLEY-HORN Storm damage t	31379031	06	03/31/2025	OH009741	8,200
PUBLIC TRUST CP MARCH 2025	62	06	03/31/2025	OH010268	2,995
QUADIENT FINANC MARCH 2025 HEL	MAR 25 POSTAGE	06	03/31/2025	OH009933	6,888
VCS ENGINEERING Cat Z GPR Scan	5100	06	03/31/2025	OH009715	8,958
WILLDAN ENGINEE Professional S	234611	06	03/31/2025	OH010813	5,200
WILLDAN ENGINEE Professional S	234305	06	03/28/2025	OH010812	18,980
THE CLEAN PLUMB Upham Concessi	97540321	06	03/25/2025	OH009615	3,139
DIVE-TECH INTER (CAT B) 3526 s	E-02825-001	06	03/24/2025	OH009691	2,865
DIVE-TECH INTER CAT B emergenc	A-02925-001	06	03/24/2025	OH009692	2,855
XYLEM WATER SOL Quote #R2024-A	3556D67884	06	03/24/2025	OH010201	3,199
XYLEM WATER SOL Quote #R2024-A	3556D67885	06	03/24/2025	OH010202	3,199
LONGVIEW INTERN VAC 2 GO RENTA	1359-001-002	06	03/17/2025	OH009595	4,174
OSBURN OCIAT replacemnt hea	INV10028	06	03/17/2025	OH010334	364
SOS SOUTHWEST Freight/Shipping	19186	06	03/14/2025	OH010470	527
SOS SOUTHWEST Quote #35078 ???	19186	06	03/14/2025	OH010470	5,895
RECREONICS INC. Change Order t	0019108827-001	06	03/07/2025	OH009491	1,254
RECREONICS INC. Pool blankets	0019108827-001	06	03/07/2025	OH009491	10,441
JOE PAYNE INC Building Departm	2315	06	03/06/2025	OH009784	107,072
XYLEM WATER SOL Lift Stations	3556D65566	06	03/06/2025	OH010200	75,132
GARNER ENVIRONM Byp pump re	G15684	06	03/05/2025	OH009910	13,625
GARNER ENVIRONM Quote #0653-R3	G15684	06	03/05/2025	OH009910	32,475
LONGVIEW INTERN VAC 2 GO RENTA	1359-001-001	06	03/05/2025	OH009594	16,695
AFTERMATH DISAS RETAINAGE	2025-007	06	03/03/2025	OH009877	632
AFTERMATH DISAS RETAINAGE	2025-007	06	03/03/2025	OH009877	21,036
C.A.P. GOVERNME Professional S	170593	06	03/01/2025	OH010332	2,960
FORTS SERVICES Fire Station Su	4034	06	03/01/2025	OH010523	57,200
C.A.P. GOVERNME SERVICES FOR F	170397	05	02/28/2025	OH010166	3,080
CUMMINS INC - A7	PCARDFEB25	05	02/28/2025	JE002232	2,044
CUMMINS INC - A7	PCARDFEB25	05	02/28/2025	JE002232	3,787
HARBOR FREIGHT TOOLS 399	PCARDFEB25	05	02/28/2025	JE002232	54
IN FLORIDA RECREATION AN	PCARDFEB25	05	02/28/2025	JE002232	65
KIMLEY-HORN HURRICANE HELE	31016855	05	02/28/2025	OH009511	1,460
KIMLEY-HORN Storm damage t	31061508	05	02/28/2025	OH009512	3,700
MOTPLANTS.COM PAG Seawall GPR	MP009938	05	02/28/2025	OH009361	876
Nazhura Foldable Folding Chair	AMAZMAR25	05	02/28/2025	JE001955	370
PUBLIC TRUST CP FEBRUARY 2025	61	05	02/28/2025	OH010313	769
PUBLIC TRUST CP FEBRUARY 2025	61	05	02/28/2025	OH010313	12,529
PUBLIX #139	PCARDFEB25	05	02/28/2025	JE002232	13
Teskyer 56-Pack Plastic Key Ta	AMAZMAR25	05	02/28/2025	JE001955	5
THE HOME DEPOT #6364	PCARDFEB25	05	02/28/2025	JE002232	37
TRANE SUPPLY-112008	PCARDFEB25	05	02/28/2025	JE002232	66
TRANE SUPPLY-112008	PCARDFEB25	05	02/28/2025	JE002232	138
US ECOLOGY LIVONIA	PCARDFEB25	05	02/28/2025	JE002232	150
GRAINGER INC. WW MINTR DIS BLO	9387092472	05	02/27/2025	OH009089	214

MPRO ENVIRONMEN Mold testing n	FL25-MLD-23641-1	05	02/27/2025	OH009604	2,802
CROWDER BROS HA DEWALT CHISEL	4802	05	02/25/2025	OH009830	87
ULINE INC. FEMA HURRICANE HELE	189629768	05	02/25/2025	OH009267	384
J & L SANCHEZ I FEMA HURRICANE	6805063	05	02/24/2025	OH009306	303
TOTAL PARKING S (4) 1 CALE CWT	107184	05	02/21/2025	OH009981	23,400
ULINE INC. STREETS SIGN SHOP T	189481178	05	02/21/2025	OH009551	1,652
AUTOMATION DIRE HURRICANE HELE	14167793_PRF	05	02/20/2025	OH009322	599
J & L SANCHEZ I FEMA HURRICANE	6805052	05	02/18/2025	OH009226	1,988
RECYCLED PLASTI (60) 32 Gallon	25-13027	05	02/18/2025	OH009157	8,472
Enerzen O-888 Industrial Ozone	AMAZONJAN25	05	02/17/2025	JE001645	90
World Dryer L-974 SLIMdri Surf	AMAZONJAN25	05	02/17/2025	JE001645	670
AFTERMATH DISAS CO to process	2025-003	05	02/13/2025	OH009602	596,803
CROWDER BROS HA SMALL TOOL REP	B96329	05	02/13/2025	OH010945	119
CROWDER BROS HA Rope for secur	4724	05	02/11/2025	OH009123	75
CROWDER BROS HA ROPE TO SECURE	4722	05	02/11/2025	OH009125	124
GARNER ENVIRONM Byp pump re	G15602	05	02/10/2025	OH009126	50,875
TAMPA BAY MARIN Emergency seaw	25-01-1	05	02/06/2025	OH009500	8,000
CROWDER BROS HA MOBI MAT REPAI	4689	05	02/05/2025	OH009828	16
CROWDER BROS HA SIGN SHOP DROP	4687	05	02/05/2025	OH009567	71
LEFT COAST UTIL Lift Station #	1697	05	02/04/2025	OH009195	6,850
LEFT COAST UTIL Lift Station E	1695	05	02/04/2025	OH008985	130,000
PERSONNEL SOLUT PW TEMP ADMIN	117385	05	02/04/2025	OH009137	1,040
AUTOMATION DIRE TRANSDUCERS DA	14129649_PRF	05	02/03/2025	OH009197	1,530
JOE PAYNE INC Building Departm	2306	05	02/03/2025	OH009173	118,202
ALLIANCE AIR SO AC Replacement	36421	04	01/31/2025	OH009662	2,580
C.A.P. GOVERNME H. HELEN 01/01	170133	04	01/31/2025	OH009753	13,200
Hackzall replacement for the s	PCARDJAN25	04	01/31/2025	JE001951	149
KIMLEY-HORN Storm damage t	30679346	04	01/31/2025	OH009312	12,554
Lost interlibrary loan book-He	PCARDJAN25	04	01/31/2025	JE001951	30
PUBLIC TRUST CP JANUARY 2025	55	04	01/31/2025	OH010266	19,686
WASTE CONNECTIO HELENE 4700 &	4149534W416	04	01/31/2025	OH009178	2,192
WILLDAN ENGINEE Professional S	234151	04	01/31/2025	OH010810	9,984
J & L SANCHEZ I FEMA HURRICANE	6804999	04	01/30/2025	OH008966	210
GRAINGER INC. WW TERMINAL BLOC	9389235665	04	01/29/2025	OH009085	259
OSBURN OCIAT SIGN REPLACEME	8897	04	01/29/2025	OH009082	9,077
RECREONICS INC. Chair lift - p	0019133872-001	04	01/29/2025	OH008935	8,103
GRAINGER INC. WW MINTR DISTR B	9387092464	04	01/28/2025	OH009087	19
GULF ELECTRIC M Machine work f	INV00428272	04	01/27/2025	OH008904	1,695
PERSONNEL SOLUT PW TEMP ADMIN	117321	04	01/27/2025	OH009135	364
ULINE INC. CHAIR REPLACEMENT	188362095	04	01/27/2025	OH009557	915
CRUMPTON WELDIN WELDING CUTTIN	584871843	04	01/23/2025	OH009034	616
RECYCLED PLASTI (60) 32 Gallon	25-13010	04	01/23/2025	OH008900	8,472
TOTAL PARKING S REPLACE 5 CWT	107145	04	01/21/2025	OH009102	17,278
C.A.P. GOVERNME 5 ONSITE INSPE	169971	04	01/20/2025	OH009021	15,560
DIRT ON DEMAND This will be th	C0548-J0003-04	04	01/20/2025	OH009486	9,500
DIRT ON DEMAND This will be th	C0548-J0003-05	04	01/20/2025	OH009487	3,500
GULF ELECTRIC M 7.5 HP Motor -	INV00428263	04	01/17/2025	OH008816	2,084
CROWDER BROS HA FEMA HURRICANE	B89866	04	01/16/2025	OH008991	149
DIRT ON DEMAND Sand Clean Up i	C0548-J0003-03	04	01/16/2025	OH009485	7,000
DIRT ON DEMAND This includes a	C0548-J0003-03	04	01/16/2025	OH009485	2,100
DIRT ON DEMAND This will be th	C0548-J0003-03	04	01/16/2025	OH009485	13,800
ROSTAN SOLUTION Can we update	INV-8662	04	01/15/2025	OH009675	98,844

ROSTAN SOLUTION HURRICANE HELE	INV-8662	04	01/15/2025	OH009675	96,256
PERSONNEL SOLUT PW TEMP ADMIN	117238	04	01/14/2025	OH009133	826
CARROLL'S BUILD Helene - shell	1022677	04	01/09/2025	OH008781	605
CARROLL'S BUILD Helene - shell	1022678	04	01/09/2025	OH008783	602
CARROLL'S BUILD shell	1022676	04	01/09/2025	OH009046	605
JOE PAYNE INC Building Departm	2288	04	01/09/2025	OH008806	69,709
CARROLL'S BUILD Helene - shell	1022420	04	01/08/2025	OH008786	1,106
CARROLL'S BUILD Helene - shell	1022421	04	01/08/2025	OH008778	1,122
CARROLL'S BUILD Helene - shell	1022422	04	01/08/2025	OH008776	606
CARROLL'S BUILD Helene - shell	1022138	04	01/07/2025	OH008774	1,120
CARROLL'S BUILD shell	1022140	04	01/07/2025	OH009042	605
CARROLL'S BUILD shell	1022141	04	01/07/2025	OH009044	348
PERSONNEL SOLUT PW TEMP ADMIN	117144	04	01/07/2025	OH009131	832
POLAR ICE MACHI Public Works i	170853	04	01/07/2025	OH008874	4,780
BON-AIRE MOTEL REPAYMENT FOR R	0237(2)	04	01/06/2025	OH008723	1,171
DIRT ON DEMAND Sand Clean Up i	C0548-J003-02	04	01/03/2025	OH009142	10,500
LINCOLN AQUATIC Motor	55918726	04	01/03/2025	OH008899	1,140
PERSONNEL SOLUT PW TEMP ADMIN	117083	04	01/02/2025	OH009080	208
PERSONNEL SOLUT PW TEMP ADMIN	117066	04	01/01/2025	OH009073	1,040
Aftermath Luncheon	PCARDDEC24	03	12/31/2024	JE001949	44
Aftermath Luncheon	PCARDDEC24	03	12/31/2024	JE001949	1,035
ALLIANCE AIR SO AC Replacement	36213	03	12/31/2024	OH008721	20,303
Batteries replaced due to hurr	PCARDDEC24	03	12/31/2024	JE001949	167
Batteries replaced due to hurr	PCARDDEC24	03	12/31/2024	JE001949	668
Batteries replaced due to hurr	PCARDDEC24	03	12/31/2024	JE001949	668
Batteries replaced due to hurr	PCARDDEC24	03	12/31/2024	JE001949	3,562
battery's, calc, scissor, push	PCARDDEC24	03	12/31/2024	JE001949	95
Community Development Tidal Ba	PCARDDEC24	03	12/31/2024	JE001949	379
Damaged Tool replacement due t	PCARDDEC24	03	12/31/2024	JE001949	303
eq commercial seal	PCARDDEC24	03	12/31/2024	JE001949	279
Helene - replacement tools	PCARDDEC24	03	12/31/2024	JE001949	527
KIMLEY-HORN HURRICANE HELE	30404548	03	12/31/2024	OH009316	2,430
Post and rope needed to cord o	PCARDDEC24	03	12/31/2024	JE001949	650
pressure filter	PCARDDEC24	03	12/31/2024	JE001949	170
PUBLIC TRUST CP DECEMBER 2024	1025	03	12/31/2024	OH009331	8,205
QUADIENT FINANC HELENE POSTAGE	DEC 24 POSTAGE	03	12/31/2024	OH008869	8,281
WASTE CONNECTIO H.HELENE DECEM	4133489W416	03	12/31/2024	OH008841	1,744
DIRT ON DEMAND This includes a	C0548-J0003-01	03	12/30/2024	OH009078	26,700
TK ELEVATOR COR Due to Hurrica	6000768882	03	12/28/2024	OH008934	3,269
TK ELEVATOR COR Elevator Pit a	6000769013	03	12/28/2024	OH008933	2,763
TK ELEVATOR COR The Suntan Art	6000768367	03	12/27/2024	OH008761	20,557
WILLDAN ENGINEE Professional S	23922	03	12/27/2024	OH010814	1,438
To secure state ets	JV000918	03	12/26/2024	JE002186	232
BOMAC CONSTRUCT STREET SWEEPIN	1377A	03	12/23/2024	OH009093	700
BOMAC CONSTRUCT HURRICANE CLEA	1342A	03	12/16/2024	OH010420	4,209
1431-GQWJ-6Y9K	JV000910	03	12/14/2024	JE002108	16
1431-GQWJ-6Y9K	JV000910	03	12/14/2024	JE002108	19
1431-GQWJ-6Y9K	JV000910	03	12/14/2024	JE002108	41
1431-GQWJ-6Y9K	JV000910	03	12/14/2024	JE002108	51
1431-GQWJ-6Y9K	JV000910	03	12/14/2024	JE002108	98
1431-GQWJ-6Y9K	JV000910	03	12/14/2024	JE002108	300
1431-GQWJ-6Y9K	JV000910	03	12/14/2024	JE002108	636

1431-GQWJ-6Y9K	JV000910	03	12/14/2024	JE002108	1,945
1JRL-HTPP-KC6C	JV000910	03	12/14/2024	JE002108	15
1JRL-HTPP-KC6C	JV000910	03	12/14/2024	JE002108	32
1JRL-HTPP-KC6C	JV000910	03	12/14/2024	JE002108	64
1V1H-4JH6-V3LD	JV000910	03	12/14/2024	JE002108	57
1V1H-4JH6-V3LD	JV000910	03	12/14/2024	JE002108	80
1V1H-4JH6-V3LD	JV000910	03	12/14/2024	JE002108	138
1V1H-4JH6-V3LD	JV000910	03	12/14/2024	JE002108	280
1V1H-4JH6-V3LD	JV000910	03	12/14/2024	JE002108	154
1VX1-HDTP-GD4P	JV000910	03	12/14/2024	JE002108	413
COTTON COMMERCI Mold Mitigatio	CD1020095	03	12/14/2024	OH008554	179,408
J & L SANCHEZ I FEMA HURRICANE	6804843	03	12/13/2024	OH008466	350
ULINE INC. TRASH BIN/ROPE	186725324	03	12/11/2024	OH008587	1,419
J & L SANCHEZ I FEMA HURRICANE	680474	03	12/10/2024	OH008452	450
JOE PAYNE INC Bldg. Dept Suppo	2266	03	12/10/2024	OH008445	46,866
BOMAC CONSTRUCT STREET SWEEPIN	1298A	03	12/09/2024	OH009208	4,200
ROSTAN SOLUTION HURRICANE HELE	8606	03	12/09/2024	OH008515	228,744
ACH RETURN BON-AIRE HOTEL	JV000965	03	12/04/2024	JE002385	0
SRQ PEST MANAGE Debris Vector	19318	03	12/04/2024	OH008979	165
AUTOMATION DIRE PROFORMA INVOI	14023442_PRF	03	12/03/2024	OH008651	5,104
PERSONNEL SOLUT PW TEMP ADMIN	116830	03	12/03/2024	OH009075	624
ULINE INC. Soft Shell Jacket	186372257	03	12/03/2024	OH008868	124
BOMAC CONSTRUCT STREET SWEEPIN	1257A	03	12/02/2024	OH009091	1,750
FLORIDA PARKING GULF WAY PAVIN	1251624	03	12/02/2024	OH008395	41,915
AFTERMATH DISAS Can we update	2024-024	03	12/01/2024	OH009601	2,197,695
AFTERMATH DISAS Change order t	2024-024	03	12/01/2024	OH009601	861,368
AFTERMATH DISAS DEBRIS REMOVAL	2024-024	03	12/01/2024	OH009601	304,984
3 parkas replacement from hele	PCARDNOV24	02	11/30/2024	JE001948	264
3 tier shelving for new FS22	PCARDNOV24	02	11/30/2024	JE001948	20
cabinet - Helene	PCARDNOV24	02	11/30/2024	JE001948	113
command heavy strips for speak	PCARDNOV24	02	11/30/2024	JE001948	37
industrial cabinet	PCARDNOV24	02	11/30/2024	JE001948	375
KIMLEY-HORN (SCADA) SYSTEM	30199922	02	11/30/2024	OH008516	3,665
KIMLEY-HORN HURRICANE HELE	30158875	02	11/30/2024	OH008519	8,244
Material Needed to replace the	PCARDNOV24	02	11/30/2024	JE001948	132
Mattress protectors and mats f	PCARDNOV24	02	11/30/2024	JE001948	7
Paper dispensers for new temp	PCARDNOV24	02	11/30/2024	JE001948	9
pool noodle replacement from h	PCARDNOV24	02	11/30/2024	JE001948	252
railing for walkovers - Helene	PCARDNOV24	02	11/30/2024	JE001948	830
replacement rug for childcare	PCARDNOV24	02	11/30/2024	JE001948	554
supplies for railings - Helene	PCARDNOV24	02	11/30/2024	JE001948	150
water dispenser for new temp F	PCARDNOV24	02	11/30/2024	JE001948	53
PUBLIC TRUST CP NOVEMBER 2024	1019	02	11/29/2024	OH009572	4,791
PUBLIC TRUST CP NOVEMBER 2024	1019	02	11/29/2024	OH009572	12,472
QUADIENT FINANC ACCT: 7900 044	NOV 24 POSTAGE	02	11/29/2024	OH008569	4,873
UNIVERSAL CONTR Electric Trans	2024-4509	02	11/29/2024	OH008631	2,296
WASTE CONNECTIO 11/01/24-11/30	4117404W416	02	11/29/2024	OH008386	2,345
WASTE CONNECTIO HURRICANE HELE	4117404W416(2)	02	11/29/2024	OH009488	6,309
J & L SANCHEZ I FEMA HURRICANE	680442	02	11/27/2024	OH008234	425
THE CLEAN PLUMB Change Order 1	89430811	02	11/27/2024	OH008682	5,000
THE CLEAN PLUMB Due to Hurrica	89430811	02	11/27/2024	OH008682	7,233
TK ELEVATOR COR Public Works b	6000763303	02	11/26/2024	OH008400	2,975

TK ELEVATOR COR Suntan Art Cen	6000763281	02	11/26/2024	OH008402	2,550
BOMAC CONSTRUCT STREET SWEEPIN	1225A	02	11/25/2024	OH009206	10,150
SITEONE LANDSCA backpack spray	148381490-001	02	11/22/2024	OH008408	478
LINCOLN AQUATIC pool motor	55909531	02	11/21/2024	OH008470	926
RECYCLED PLASTI (60) 32 Gallon	24-12928	02	11/21/2024	OH008194	8,472
GRAINGER INC. locks to secure	9320133763	02	11/19/2024	OH008173	408
J & L SANCHEZ I FEMA HURRICANE	680287	02	11/19/2024	OH008114	438
J & L SANCHEZ I FEMA HURRICANE	680395	02	11/19/2024	OH008132	425
BOMAC CONSTRUCT HURRICANE HELE	1189A	02	11/18/2024	OH008137	16,538
J & L SANCHEZ I FEMA HURRICANE	680393	02	11/18/2024	OH008090	175
PROJECT INNOVAT Playground sur	2808	02	11/18/2024	OH008195	9,360
THE PENWORTHY C TOT TIME GAME	603779	02	11/18/2024	OH008417	99
COTTON COMMERCI Mold Mitigatio	AD1001302	02	11/15/2024	OH008068	87,351
ACE HARDWARE OF PANEL VOLTAGE	11300	02	11/14/2024	OH008379	64
THE CLEAN PLUMB Due to Hurrica	89311218	02	11/14/2024	OH008045	3,080
TURTLE POOL AND Emergency drai	TPS11.14.2024	02	11/14/2024	OH008016	9,500
FERRIS POOLS IN Pool repair a	579112	02	11/13/2024	OH007988	1,900
QUADIENT FINANC CERTIFIED MAIL	11.03.24 BILL	02	11/13/2024	OH008463	2,400
ULINE INC. walkover stakes	185522410	02	11/12/2024	OH008021	779
BOMAC CONSTRUCT HURRICANE CLEA	1152A	02	11/11/2024	OH010271	17,721
THE CLEAN PLUMB FEMA HURRICANE	89233920	02	11/09/2024	OH008008	1,899
THE CLEAN PLUMB FEMA HURRICANE	89241621	02	11/09/2024	OH008006	1,499
Replacement	JV000915	02	11/08/2024	JE002183	95
Replacement	JV000915	02	11/08/2024	JE002183	120
Replacement	JV000915	02	11/08/2024	JE002183	190
Requested by Director	JV000915	02	11/08/2024	JE002183	154
Requested by Director	JV000915	02	11/08/2024	JE002183	580
JACKSON MANUFAC M22556 caster	M22556	02	11/07/2024	OH008122	629
THE CLEAN PLUMB FEMA HURRICANE	89146117	02	11/07/2024	OH008014	2,328
THE CLEAN PLUMB Sewer clean ou	89162720	02	11/07/2024	OH008015	5,200
ACE HARDWARE OF PS1 ODOR CONTR	11255	02	11/06/2024	OH008385	179
MCMULLEN OIL CO FUEL FOR GENER	100083	02	11/06/2024	OH008491	1,247
SRQ PEST MANAGE EGAN PARK RODE	18791	02	11/06/2024	OH008156	109
CALADESI CONSTR DRIVEWAY APRON	2421	02	11/05/2024	OH008511	51,336
J & L SANCHEZ I Additional ele	680341	02	11/05/2024	OH008567	3,098
ULINE INC. Safety Fence and po	185248849	02	11/05/2024	OH008032	4,658
BOMAC CONSTRUCT HURRICANE CLEA	2000	02	11/04/2024	OH010421	12,631
J & L SANCHEZ I FEMA HURRICANE	680325	02	11/04/2024	OH008077	175
J & L SANCHEZ I FEMA HURRICANE	680326	02	11/04/2024	OH008348	525
MOTOROLA SOLUTI Trailer setup	8330290464	02	11/04/2024	OH010406	4,937
THE CLEAN PLUMB FEMA HURRICANE	67707024	02	11/02/2024	OH007845	1,889
THE CLEAN PLUMB FEMA HURRICANE	67712220	02	11/02/2024	OH007843	1,899
THE CLEAN PLUMB FEMA HURRICANE	89068288	02	11/02/2024	OH007899	2,400
3 cupboards for new temp FS2	PCARDOCT24	01	10/31/2024	JE001942	487
8 Hex bolts	PCARDOCT24	01	10/31/2024	JE001942	2
AMAZING LOCK & FEMA HURRICANE	8506	01	10/31/2024	OH007865	732
Breakfast and lunch items for	PCARDOCT24	01	10/31/2024	JE001942	95
Breakfast for EOC staff	PCARDOCT24	01	10/31/2024	JE001942	616
chainsaw	PCARDOCT24	01	10/31/2024	JE001942	167
coffee for staff/ breakfast	PCARDOCT24	01	10/31/2024	JE001942	42
coupler	PCARDOCT24	01	10/31/2024	JE001942	67
coupler	PCARDOCT24	01	10/31/2024	JE001942	1,669

cyanuric acid,bi card	PCARDOCT24	01	10/31/2024	JE001942	198
DIRT ON DEMAND INITIAL P CL	C0548-J001-I001	01	10/31/2024	OH008004	11,000
Electrical Supplies needed for	PCARDOCT24	01	10/31/2024	JE001942	282
Employee Hurricane Helene Lunc	PCARDOCT24	01	10/31/2024	JE001942	267
EMS metal lockers	PCARDOCT24	01	10/31/2024	JE001942	360
EOC Supplies	PCARDOCT24	01	10/31/2024	JE001942	93
EOC Supplies	PCARDOCT24	01	10/31/2024	JE001942	233
EOC Supplies	PCARDOCT24	01	10/31/2024	JE001942	262
fittings	PCARDOCT24	01	10/31/2024	JE001942	136
Fleet Shop Cleaning Supplies	PCARDOCT24	01	10/31/2024	JE001942	153
food for comfort center and st	PCARDOCT24	01	10/31/2024	JE001942	21
food for comfort center and st	PCARDOCT24	01	10/31/2024	JE001942	476
Food for EOC	PCARDOCT24	01	10/31/2024	JE001942	55
Food for EOC	PCARDOCT24	01	10/31/2024	JE001942	180
food for staff	PCARDOCT24	01	10/31/2024	JE001942	23
food for staff	PCARDOCT24	01	10/31/2024	JE001942	130
fuel	PCARDOCT24	01	10/31/2024	JE001942	119
Fuel for DC23 during storm	PCARDOCT24	01	10/31/2024	JE001942	45
Fuel for DC23 during storm	PCARDOCT24	01	10/31/2024	JE001942	55
Fuel for SR23 during storm	PCARDOCT24	01	10/31/2024	JE001942	36
gas	PCARDOCT24	01	10/31/2024	JE001942	31
Gas Filled Tank - C01	PCARDOCT24	01	10/31/2024	JE001942	90
Gas for Bus. Exxons closed due	PCARDOCT24	01	10/31/2024	JE001942	121
Gas TOP OFF - C124	PCARDOCT24	01	10/31/2024	JE001942	26
gaskets	PCARDOCT24	01	10/31/2024	JE001942	85
gaskets	PCARDOCT24	01	10/31/2024	JE001942	1,858
HOLIDAY INN EXP BEANE HOTEL ST	37289	01	10/31/2024	OH008953	740
HOLIDAY INN EXP EARNEST HOTEL	37288	01	10/31/2024	OH008953	740
HOLIDAY INN EXP EMPLOYEE HOTEL	14780	01	10/31/2024	OH008972	2,072
HOLIDAY INN EXP EMPLOYEE HOTEL	14783	01	10/31/2024	OH008972	2,072
HOLIDAY INN EXP SMITH HOTEL ST	37290	01	10/31/2024	OH008953	740
hose for pool pump	PCARDOCT24	01	10/31/2024	JE001942	53
HURRICANE HELENE - snacks/beve	PCARDOCT24	01	10/31/2024	JE001942	124
Hurricane Helene - Supplies Ne	PCARDOCT24	01	10/31/2024	JE001942	508
Hurricane Helene Electrical Re	PCARDOCT24	01	10/31/2024	JE001942	622
Hurricane Helene Employee supp	PCARDOCT24	01	10/31/2024	JE001942	175
Hurricane Helene Food Supplies	PCARDOCT24	01	10/31/2024	JE001942	332
Hurricane Helene Lunch	PCARDOCT24	01	10/31/2024	JE001942	3,500
Hurricane Helene Pizza Order	PCARDOCT24	01	10/31/2024	JE001942	371
Hurricane Milton Supplies	PCARDOCT24	01	10/31/2024	JE001942	198
Husky 1/4 socket set-folding h	PCARDOCT24	01	10/31/2024	JE001942	72
ice for staff	PCARDOCT24	01	10/31/2024	JE001942	17
ice maker replacement	PCARDOCT24	01	10/31/2024	JE001942	713
keys for lift stations	PCARDOCT24	01	10/31/2024	JE001942	29
KIMLEY-HORN (SCADA) SYSTEM	29885140	01	10/31/2024	OH008191	10,890
KIMLEY-HORN DAMAGE ESSM	30068114	01	10/31/2024	OH008189	147,583
KIMLEY-HORN HURRICANE HELE	29885141	01	10/31/2024	OH008190	63,043
kitchen supplies for new temp	PCARDOCT24	01	10/31/2024	JE001942	153
Lunch for all staff	PCARDOCT24	01	10/31/2024	JE001942	792
Lunch for City Employees	PCARDOCT24	01	10/31/2024	JE001942	351
Lunch for City Employees	PCARDOCT24	01	10/31/2024	JE001942	556
Lunch for EOC Staff	PCARDOCT24	01	10/31/2024	JE001942	998

Lunch for staff	PCARDOCT24	01	10/31/2024	JE001942	184
Plates, utensils, pots, mats f	PCARDOCT24	01	10/31/2024	JE001942	175
PUBLIC TRUST CP FEMA SUPPORT O	1007	01	10/31/2024	OH008404	12,005
Rubbermaid 7 gallon trash cans	PCARDOCT24	01	10/31/2024	JE001942	69
Salt away for unit desalting p	PCARDOCT24	01	10/31/2024	JE001942	215
Self tapping screws 2 boxes	PCARDOCT24	01	10/31/2024	JE001942	32
snacks /breakfast	PCARDOCT24	01	10/31/2024	JE001942	256
snacks for City employees	PCARDOCT24	01	10/31/2024	JE001942	13
SPB Permitting Fee	PCARDOCT24	01	10/31/2024	JE001942	134
SPB Permitting Service Fee	PCARDOCT24	01	10/31/2024	JE001942	5
SRQ PEST MANAGE VECTOR CONTROL	18670	01	10/31/2024	OH008061	109
ST 22 houseware post hurricane	PCARDOCT24	01	10/31/2024	JE001942	216
Supplies for new temp FS22(p	PCARDOCT24	01	10/31/2024	JE001942	34
tarps	PCARDOCT24	01	10/31/2024	JE001942	396
taylor water test kit	PCARDOCT24	01	10/31/2024	JE001942	114
TRADEWINDS ISLA H. HELENE RESP	BKG 1082	01	10/31/2024	OH008953	3,700
Vehicles/ gas fueling (van)	PCARDOCT24	01	10/31/2024	JE001942	71
WASTE CONNECTIO HURRICANE HELE	4100949W416	01	10/31/2024	OH008119	18,899
J & L SANCHEZ I FEMA HURRICANE	680302	01	10/30/2024	OH008079	275
J & L SANCHEZ I FEMA HURRICANE	680305	01	10/30/2024	OH008081	613
SMITH FENCE COM PERIMETER FENC	T31003	01	10/29/2024	OH008745	5,712
BON-AIRE MOTEL ROOM#0237 10/21	237	01	10/28/2024	OH008245	1,171
AFTERMATH DISAS DEBRIS REMOVAL	2024-019	01	10/25/2024	OH008872	29,063
AMAZING LOCK & FEMA HURRICANE	8500	01	10/25/2024	OH007703	687
AMAZING LOCK & FEMA HURRICANE	8501	01	10/25/2024	OH007699	687
THE CLEAN PLUMB emergency Jett	67596533	01	10/25/2024	OH007866	2,706
THE CLEAN PLUMB FEMA HURRICANE	67548698	01	10/25/2024	OH007713	2,031
J & L SANCHEZ I FEMA HURRICANE	680260	01	10/24/2024	OH008085	200
J & L SANCHEZ I FEMA HURRICANE	680262	01	10/24/2024	OH008083	325
SRQ PEST MANAGE EGAN PARK RODE	18595	01	10/24/2024	OH008154	165
THE CLEAN PLUMB FEMA HURRICANE	67552235	01	10/24/2024	OH007701	2,031
J & L SANCHEZ I Service Call t	680242	01	10/23/2024	OH008288	3,710
SECURITAS TECHN FEMA HURRICANE	6004613679	01	10/23/2024	OH007935	104
SOLSEEN REPLACEMENT UNIFORMS -	1018980	01	10/23/2024	OH007674	288
HAMPTON INN & S B.KOSAR, C.ADK	1729513597	01	10/22/2024	OH007636	6,060
J & L SANCHEZ I Emergency repl	680241	01	10/22/2024	OH008199	5,000
J & L SANCHEZ I FEMA HURRICANE	680238	01	10/22/2024	OH008092	525
LEFT COAST UTIL SANITARY SEWER	1648	01	10/21/2024	OH008062	73,807
LEFT COAST UTIL SANITARY SEWER	1650	01	10/21/2024	OH008220	37,075
J & L SANCHEZ I Installation o	680233	01	10/20/2024	OH008123	30,345
SPRINKLERMATIC FEMA HURRICANE	51910	01	10/18/2024	OH007644	624
AFTERMATH DISAS DEBRIS REMOVAL	2024-018	01	10/17/2024	OH008870	165,952
ULINE INC. SHOP TOWEL REPLACEM	184470684	01	10/17/2024	OH008275	464
J & L SANCHEZ I FEMA HURRICANE	680205	01	10/16/2024	OH008075	1,700
SRQ PEST MANAGE VECTOR CONTROL	18525	01	10/16/2024	OH008039	515
HOLIDAY INN EXP ALICIA KALKE H	37282	01	10/15/2024	OH008245	296
J & L SANCHEZ I FEMA HURRICANE	680185	01	10/14/2024	OH008148	450
J & L SANCHEZ I Pool lost powe	680182	01	10/14/2024	OH008287	4,100
LEALMAN SPECIAL CH IS WASH -	776	01	10/14/2024	OH007682	140
LEALMAN SPECIAL CH IS WASH H	775	01	10/14/2024	OH007688	140
LEALMAN SPECIAL CH IS WASH H	777	01	10/14/2024	OH007684	140
LEALMAN SPECIAL CH IS WASH H	778	01	10/14/2024	OH007686	140

LEFT COAST UTIL SANITARY SEWER	1646	01	10/14/2024	OH008580	15,170
NATIONAL TRENCH PLATE RENTAL -	934076	01	10/14/2024	OH008257	1,116
HAMPTON INN & S A. MATSON & J.	1728922698	01	10/09/2024	OH007636	1,540
J & L SANCHEZ I FEMA HURRICANE	680159	01	10/07/2024	OH008111	700
LEFT COAST UTIL SANITARY SEWER	1644	01	10/07/2024	OH008579	96,702
J & L SANCHEZ I FEMA HURRICANE	680288	01	10/05/2024	OH008116	2,250
HEYWARD FLORIDA NUTIENT FOR SE	JH100324-SPB-1	01	10/03/2024	OH008353	682
J & L SANCHEZ I FEMA HURRICANE	680103	01	10/03/2024	OH008202	600
EVERGLADES EQUI replacement eq	P0452850	01	10/02/2024	OH007563	1,931
FLEET PRODUCTS PRESSURE WASHER	2443694	01	10/02/2024	OH008310	24
BOB LEE'S INC. PW121 TIRE	393036	01	10/01/2024	OH008299	1,043
FLEET PRODUCTS SPARK PLUG/FILT	2443605	01	10/01/2024	OH008312	159
Hurricane Helene prep supplies	PCARDSEPT24	01	10/01/2024	JE002097	93
Hurricane Helene storm prep st	PCARDSEPT24	01	10/01/2024	JE002097	309
Hurricane Prep Helene	PCARDSEPT24	01	10/01/2024	JE002097	26
Hurricane Prep Helene	PCARDSEPT24	01	10/01/2024	JE002097	280
ice for staff	PCARDSEPT24	01	10/01/2024	JE002097	15
Misc. items for EOC	PCARDSEPT24	01	10/01/2024	JE002097	180
Misc. items for EOC	PCARDSEPT24	01	10/01/2024	JE002097	917
Prep for Hurricane Helene boat	PCARDSEPT24	01	10/01/2024	JE002097	164
Propane for storm Hurricane He	PCARDSEPT24	01	10/01/2024	JE002097	59
Snacks	PCARDSEPT24	01	10/01/2024	JE002097	227
ELLIS AUTOMATED RADIOS AND MOD	4774	12	09/30/2024	OH008011	2,016
FOUR SEASONS MO Helene cleanup	4026	12	09/30/2024	OH007652	1,200
FOUR SEASONS MO Helene cleanup	4032	12	09/30/2024	OH007648	1,200
JOE PAYNE INC Building Departm	2210	12	09/30/2024	OH008049	51,312
MORELLI LANDSCA Punta Vista tr	24180	12	09/30/2024	OH007557	400
OSBURN OCIAT DO NOT ENTER	6374	12	09/30/2024	OH008514	1,800
OSBURN OCIAT REPLACEMENT ST	6375	12	09/30/2024	OH008513	2,500
WASTE CONNECTIO HELENE DEBRIS	4084601W416	12	09/30/2024	OH007636	1,950
FOUR SEASONS MO Helene cleanup	4025	12	09/29/2024	OH007642	1,500
FOUR SEASONS MO Helene cleanup	4031	12	09/29/2024	OH007650	1,500
GINNY KEETER-BO TAXI TO GET TO	9/29/2024	12	09/29/2024	OH007613	37
FOUR SEASONS MO Helene cleanup	4024	12	09/28/2024	OH007640	1,200
CARROLL'S BUILD sand for helen	1008825	12	09/25/2024	OH007549	1,116
CARROLL'S BUILD sand for helen	1008826	12	09/25/2024	OH007547	1,116
CARROLL'S BUILD sand for helen	1008969	12	09/25/2024	OH007545	1,116
CARROLL'S BUILD sand for helen	1008970	12	09/25/2024	OH007543	1,116
CROWDER BROS HA BR PADLOCK	4346	12	09/25/2024	OH007787	10
FLEET PRODUCTS RECOVERY STRAPS	2443253	12	09/25/2024	OH007818	449
NATIONAL TRENCH DELIVERY FEE F	922283	12	09/25/2024	OH008254	517
CARROLL'S BUILD sand for Hurri	1008615	12	09/24/2024	OH007537	1,116
CARROLL'S BUILD sand for Hurri	1008659	12	09/24/2024	OH007539	1,116
CROWDER BROS HA SHOVEL/RAKE HE	4334	12	09/23/2024	OH007816	67
CROWDER BROS HA Polyfilm Storm	4276	12	09/12/2024	OH007785	23
CARROLL'S BUILD sand for pre s	1005144	12	09/03/2024	OH007656	1,321
CARROLL'S BUILD Sand for pre h	1004254	11	08/27/2024	OH007654	1,086
Total for Account 9618-6010					**9,837,969.95**

HURRICANE MILTON FY25

Description	Reference	Period	Posting Date	Set ID	Debit

COTTON COMMERCI Hurricane Milt	2	12	09/30/2025	OH012015	284,680.48
COTTON COMMERCI Hurricane Milt	1	11	08/31/2025	OH011598	781,368.89
SMITH FENCE COM REPLACE DAMAGE	31938	11	08/14/2025	OH011257	4,095.70
RECL S PASADENA CK 48838R	JV000912	10	07/30/2025	JE002131	3,000.00
COTTON COMMERCI Hurricane Milt	CD1023362-1	10	07/23/2025	OH010861	628,462.12
REFUND ULINE REF184247612	JV000879	10	07/16/2025	JE002048	0.00
SMITH FENCE COM Repair/replace	32004	10	07/10/2025	OH010795	3,261.00
SMITH FENCE COM Replacement of	31995	10	07/10/2025	OH010794	4,690.00
KIMLEY-HORN HURRICANE MILT	32409336	09	06/30/2025	OH011110	1,285.00
DREW ROOFING LL FEMA HURRICANE	4863	09	06/09/2025	OH010343	1,425.00
KIMLEY-HORN SRVC THROUGH M	32076237	08	05/31/2025	OH010992	1,005.00
GULF ELECTRIC MOTOR CONTR	PCARDMAY25	08	05/28/2025	JE002235	673.49
CROWDER BROS HA warren webster	5260	08	05/21/2025	OH010212	59.98
J & L SANCHEZ I Adjust light f	68051980	08	05/21/2025	OH011354	2,275.00
KIMLEY-HORN HURRICANE MILT	31704607	07	04/30/2025	OH010060	8,035.40
KIMLEY-HORN HURRICANE MILT	31704615	07	04/30/2025	OH010059	2,025.00
LLOYDS SHELTON AUTO GLAS	PCARDAPRIL25	07	04/30/2025	JE002234	994.93
SMITH FENCE COM Due to Hurrica	31777	07	04/29/2025	OH009885	4,435.00
KIMLEY-HORN HURRICANE MILT	31399897	06	03/31/2025	OH009742	2,480.00
KIMLEY-HORN HURRICANE MILT	31528305	06	03/31/2025	OH009744	16,443.99
SMITH FENCE COM FEMA HURRICANE	31776	06	03/31/2025	OH009682	760.00
MPRO ENVIRONMEN FEMA HURRICANE	FL25-MLD-23645-1	06	03/07/2025	OH009380	802.00
KIMLEY-HORN HURRICANE MILT	31016856	05	02/28/2025	OH009513	3,691.90
KIMLEY-HORN HURRICANE MILT	31123260	05	02/28/2025	OH009510	7,355.00
KIMLEY-HORN HURRICANE MILT	30853138	04	01/31/2025	OH009310	9,992.50
KIMLEY-HORN HURRICANE MILT	30853139	04	01/31/2025	OH009311	6,983.82
SMITH FENCE COM FEMA HURRICANE	31629	04	01/31/2025	OH009221	2,207.00
SMITH FENCE COM FEMA HURRICANE	31631	04	01/31/2025	OH009224	807.25
SMITH FENCE COM FEMA HURRICANE	31633	04	01/31/2025	OH009218	1,144.00
SMITH FENCE COM Replacement of	31630	04	01/31/2025	OH009219	5,065.31
SMITH FENCE COM Replacement of	31634	04	01/31/2025	OH010087	30,305.00
SMITH FENCE COM Replacement of	31635	04	01/31/2025	OH009222	3,782.00
J & L SANCHEZ I FEMA HURRICANE	6805003	04	01/30/2025	OH009119	1,715.00
PERSONNEL SOLUT PW TEMP ADMIN	117259	04	01/21/2025	OH009070	1,040.00
KIMLEY-HORN HURRICANE MILT	30404549	03	12/31/2024	OH009317	7,630.00
KIMLEY-HORN HURRICANE MILT	30584832	03	12/31/2024	OH009313	9,812.50
Nylon Rope for the temporary f	PCARDDEC24	03	12/31/2024	JE001949	19.98
Public Works Roof supplies nee	PCARDDEC24	03	12/31/2024	JE001949	339.39
SMITH FENCE COM FEMA HURRICANE	1117.6	03	12/31/2024	OH008760	1,117.60
Yellow Chain Coil Carbon Steel	PCARDDEC24	03	12/31/2024	JE001949	134.10
MORELLI LANDSCA Reset trees fr	24219	03	12/30/2024	OH008728	3,570.00
Complete tasks igned	JV000918	03	12/26/2024	JE002186	13.18
Complete tasks igned	JV000918	03	12/26/2024	JE002186	21.23
Complete tasks igned	JV000918	03	12/26/2024	JE002186	22.82
Complete tasks igned	JV000918	03	12/26/2024	JE002186	33.08
Complete tasks igned	JV000918	03	12/26/2024	JE002186	379.82
Complete tasks igned	JV000918	03	12/26/2024	JE002186	235.04
Complete tasks igned	JV000918	03	12/26/2024	JE002186	1,351.32
Office supplies	JV000918	03	12/26/2024	JE002186	109.95
PERSONNEL SOLUT PW TEMP ADMIN	116953	03	12/18/2024	OH008592	1,040.00
11JG-LXGH-7JWX	JV000910	03	12/14/2024	JE002108	59.90
11JG-LXGH-7JWX	JV000910	03	12/14/2024	JE002108	62.99

11JG-LXGH-7JWX	JV000910	03	12/14/2024	JE002108	195.01
11JG-LXGH-7JWX	JV000910	03	12/14/2024	JE002108	313.15
1MJY-CG9L-D77N	JV000910	03	12/14/2024	JE002108	195.01
1MJY-CG9L-D77N	JV000910	03	12/14/2024	JE002108	313.15
PERSONNEL SOLUT PW TEMP ADMIN	116891	03	12/09/2024	OH008626	1,040.00
EOC lunch and Learn	PCARDNOV24	02	11/30/2024	JE001948	23.98
KIMLEY-HORN HURRICANE MILT	30158876	02	11/30/2024	OH008509	5,160.00
KIMLEY-HORN HURRICANE MILT	30199923	02	11/30/2024	OH008518	16,333.98
Storm REcovery HArdware Commun	PCARDNOV24	02	11/30/2024	JE001948	605.85
Tarps and material needed for	PCARDNOV24	02	11/30/2024	JE001948	252.00
Trash bags	PCARDNOV24	02	11/30/2024	JE001948	85.00
ROWLAND INC. Traffic Controll	2162-178	02	11/27/2024	OH009204	8,211.50
LEFT COAST UTIL H. MILTON LIFT	1675	02	11/25/2024	OH008218	5,610.00
LEFT COAST UTIL Final invoice	1671	02	11/18/2024	OH008360	32.25
LEFT COAST UTIL H. MILTON LIFT	1672	02	11/18/2024	OH008183	9,330.00
LEFT COAST UTIL H. MILTON STOR	1671	02	11/18/2024	OH008360	51,107.00
LEFT COAST UTIL H. MILTON STOR	1663	02	11/11/2024	OH008031	71,344.00
LEFT COAST UTIL LS1 BYP 11/	1664	02	11/11/2024	OH008033	7,850.00
Cleaning out buildings	JV000915	02	11/08/2024	JE002183	367.12
Replacement boots	JV000915	02	11/08/2024	JE002183	144.64
Replacement boots	JV000915	02	11/08/2024	JE002183	156.13
LEFT COAST UTIL H. MILTON LIFT	1659	02	11/04/2024	OH007879	7,850.00
LEFT COAST UTIL H. MILTON STOR	1658	02	11/04/2024	OH007878	72,897.50
bar and chain oil for equipmen	PCARDOCT24	01	10/31/2024	JE001942	43.82
Beach cleanup supplies	PCARDOCT24	01	10/31/2024	JE001942	69.76
Beach cleanup supplies	PCARDOCT24	01	10/31/2024	JE001942	108.91
Beach cleanup supplies	PCARDOCT24	01	10/31/2024	JE001942	124.98
Breakfast and lunch staff Hurr	PCARDOCT24	01	10/31/2024	JE001942	876.00
Breakfast for City Employees	PCARDOCT24	01	10/31/2024	JE001942	493.62
Breakfast for Employees	PCARDOCT24	01	10/31/2024	JE001942	344.43
Breakfast for Employees	PCARDOCT24	01	10/31/2024	JE001942	456.75
Breakfast for Employees	PCARDOCT24	01	10/31/2024	JE001942	2,125.16
Dinner for FD	PCARDOCT24	01	10/31/2024	JE001942	184.00
Dinner for Fire Department	PCARDOCT24	01	10/31/2024	JE001942	320.00
food for comfort center and st	PCARDOCT24	01	10/31/2024	JE001942	359.88
Food for EOC	PCARDOCT24	01	10/31/2024	JE001942	21.34
Food for EOC	PCARDOCT24	01	10/31/2024	JE001942	26.99
Food for EOC	PCARDOCT24	01	10/31/2024	JE001942	34.79
Food for EOC	PCARDOCT24	01	10/31/2024	JE001942	83.43
Food for EOC	PCARDOCT24	01	10/31/2024	JE001942	133.25
Food for EOC	PCARDOCT24	01	10/31/2024	JE001942	185.12
Food for EOC	PCARDOCT24	01	10/31/2024	JE001942	190.99
Food for EOC	PCARDOCT24	01	10/31/2024	JE001942	213.10
Food for EOC	PCARDOCT24	01	10/31/2024	JE001942	238.00
Food for EOC	PCARDOCT24	01	10/31/2024	JE001942	257.06
Food for EOC	PCARDOCT24	01	10/31/2024	JE001942	279.34
Food for EOC	PCARDOCT24	01	10/31/2024	JE001942	512.83
Food for EOC	PCARDOCT24	01	10/31/2024	JE001942	1,323.59
Fuel for Milton	PCARDOCT24	01	10/31/2024	JE001942	79.14
Grethcen Johnson Displaced	PCARDOCT24	01	10/31/2024	JE001942	2,072.00
Grethcen Johnson Displaced	PCARDOCT24	01	10/31/2024	JE001942	1,294.00
GROW CARE OUTDO LANDSCAPING SE	15890	01	10/31/2024	OH007906	154,000.00

Hotel Andria Nicholson displac	PCARDOCT24	01	10/31/2024	JE001942	474.00
Hotel Joanne Boland Displaced	PCARDOCT24	01	10/31/2024	JE001942	474.00
Hurricane Milton Employee Meal	PCARDOCT24	01	10/31/2024	JE001942	1,125.00
Hurricane Milton Employee Meal	PCARDOCT24	01	10/31/2024	JE001942	1,220.00
KIMLEY-HORN HURRICANE MILT	30068122	01	10/31/2024	OH008193	81,958.41
KIMLEY-HORN HURRICANE MILT	30068127	01	10/31/2024	OH008192	29,667.50
KIMLEY-HORN SCADA OPERATIO	29991629	01	10/31/2024	OH008188	11,360.00
Lift station equipment	PCARDOCT24	01	10/31/2024	JE001942	867.50
Lunch	PCARDOCT24	01	10/31/2024	JE001942	123.62
Lunch and Dinner for Employees	PCARDOCT24	01	10/31/2024	JE001942	714.94
Lunch and Dinner for Employees	PCARDOCT24	01	10/31/2024	JE001942	1,150.00
Lunch and Dinner for Employees	PCARDOCT24	01	10/31/2024	JE001942	1,548.79
Lunch for all staff	PCARDOCT24	01	10/31/2024	JE001942	687.68
Lunch for all staff	PCARDOCT24	01	10/31/2024	JE001942	880.00
Lunch for all staff	PCARDOCT24	01	10/31/2024	JE001942	888.00
Lunch for City employees	PCARDOCT24	01	10/31/2024	JE001942	566.89
Lunch for Employees	PCARDOCT24	01	10/31/2024	JE001942	1,179.94
newman Charles Displaced	PCARDOCT24	01	10/31/2024	JE001942	1,580.00
oil lopper	PCARDOCT24	01	10/31/2024	JE001942	94.96
Portable tent for beach cleanu	PCARDOCT24	01	10/31/2024	JE001942	284.05
Refrigerator -PW	PCARDOCT24	01	10/31/2024	JE001942	2,163.00
REFUND Food for EOC	PCARDOCT24	01	10/31/2024	JE001942	0.00
Snacks, drinks, breakfast for	PCARDOCT24	01	10/31/2024	JE001942	273.71
stakes, gloves, knives	PCARDOCT24	01	10/31/2024	JE001942	513.16
ROWLAND INC. SANITARY SUPPORT	2162-172	01	10/30/2024	OH007790	6,351.25
LEFT COAST UTIL H. MILTON LIFT	1652	01	10/28/2024	OH007883	8,581.14
LEFT COAST UTIL H. MILTON LIFT	1656	01	10/28/2024	OH007885	7,850.00
LEFT COAST UTIL H. MILTON STOR	1651	01	10/28/2024	OH007882	41,008.00
LEFT COAST UTIL H. MILTON STOR	1655	01	10/28/2024	OH007884	72,068.50
OSCAR ASENCIO L FEMA HURRICANE	490	01	10/24/2024	OH007695	350.00
MORELLI LANDSCA Reset trees pu	24184	01	10/23/2024	OH007697	550.00
NATIONAL TRENCH PLATE RENTAL 7	939754	01	10/23/2024	OH008259	889.00
EVERGLADES EQUI Chainsaw	P93660	01	10/18/2024	OH011641	1,209.47
FAST SIGNS 2113 EOC Mission re	2113-23554	01	10/18/2024	OH008349	11,430.81
GRAINGER INC. COOPER BOOTS	9285658549	01	10/18/2024	OH008436	177.31
ULINE INC. PAPER BAGS - VEGETA	184470521	01	10/17/2024	OH008272	2,399.06
FOUR SEASONS MO debris clearin	4036	01	10/16/2024	OH007802	1,200.00
FOUR SEASONS MO debris cleanin	4035	01	10/15/2024	OH007800	1,275.00
GRAINGER INC. SW - Milton	9281804667	01	10/15/2024	OH008242	354.62
FOUR SEASONS MO debris cleanup	4034	01	10/14/2024	OH007798	1,200.00
J & L SANCHEZ I FEMA HURRICANE	680183	01	10/14/2024	OH008108	1,920.00
J & L SANCHEZ I FEMA HURRICANE	680184	01	10/14/2024	OH008106	2,330.00
ULINE INC. SUNSCREEN/BUGSPRAY	184247612	01	10/08/2024	OH008356	304.23
Total for Account 9618-6011					**2,579,412.75**

CITY COMMISSION MEETING
CITY OF ST. PETE BEACH
COMMISSION CHAMBERS

Agenda Report

Agenda Title Name: Final Reading of Ordinance 2025-23: Amendment of Procurement Regulations and Procedures

Action Request: Motion to [approve/approve with modifications/deny/continue to [specify date certain]] Ordinance 2025-23.

Strategic Objective: Operational Excellence

Date: December 16, 2025

Prepared By: Devon Schmidt, Director of Finance

Through: Frances Robustelli, City Manager

Summary of Issue: The revised Procurement Ordinance modernizes the city's procurement process to maximize public value, integrity, and accountability, explicitly incorporating a "cone of silence" to ensure fairness in competitive solicitations. It expands and clarifies key definitions, aligning terminology and procedures with state law and FDEM standards. The ordinance lists specific exemptions, such as federal and state-funded procurements (where state or FDEM rules supersede local), emergency purchases, utility services, real estate, legal services, and piggybacking on contracts awarded by other Florida entities in line with disaster recovery practices. The City Manager appoints a Procurement Manager to oversee daily operations, while the City Manager and Commission retain sole authority to execute contracts and change orders. Approval thresholds are set so the City Manager may approve contracts up to $25,000, with commission approval required for higher amounts and emergency procurements of over $25,000 must be reported to the commission. Procurement methodology is updated with a micro-purchase threshold (up to $5,000, no quotes required), a simplified acquisition threshold ($5,000–$50,000, requiring three informal quotes), and a competitive proposal threshold (over $50,000, requiring formal solicitation), with architectural and engineering services procured per Florida Statutes

(CCNA). During emergencies or declared states of emergency, normal procedures may be suspended, and federal emergency purchases must comply with 44 CFR 13.36, allowing inter-municipal emergency purchasing consistent with FDEM protocols. The ordinance enables cooperative and single source procurement, allowing purchases from other public or non-profit entities' contracts if competitively awarded, and single source procurement when only one vendor is available. Departments manage contracts, while the Procurement Manager handles disputes and vendor evaluations. Strict timelines and filing fees are established for protests and appeals, with grounds for protest limited to misapplication or inconsistency in evaluation criteria. The City Manager may suspend or debar vendors for up to five years for fraud, default, repeated poor performance, or other serious offenses, with written notice and an appeal process provided the updated version adds compliance with Senate Bill 180 (July 2025) as grounds for debarment. Clarifies that businesses debarred by the federal government are also ineligible. Key restrictions include prohibiting the breakdown of purchases to avoid approval thresholds, enforcing the cone of silence, requiring commission notification and justification for emergency waivers, strictly enforcing protest and appeal deadlines, and debarment for serious offenses. The ordinance is fully aligned with FDEM and state requirements, referencing relevant statutes and protocols for exemptions, emergency procedures, piggybacking, and procurement of professional services.

Funding: N/A

Attachments:

1. Procurement Ordinance Summary of Changes
2. Ordinance 2025-23 with Exhibit

Section/Topic	Old Version (DIVISION_4)	New Version	Notes/Comments
Exemptions	11 items	19 items	Expanded list in line with FDEM
Micro-purchase threshold	$2,500	$5,000	Raised
Simplified acquisition	$25,000	$50,000	Raised
Formal bid threshold	$25,000	$50,000	Raised
Bid terminology	ITB	RFB	Updated
Green business preference	Yes	Removed	Statute update 287.05701 Prohibition against considering social, political, or ideological interests in government contracting
Single source posting	7 days	15 days	Statute update
Protest process	Basic	Detailed, with fees	Legal updated
Debarment	General	Adds SB180, Fed. gov't	Expanded
City Commission authority	Implicit	Explicit	Legal clarity
Legal sections (conflict, etc.)	No	Yes	New

Ordinance 2025-23

AN ORDINANCE OF THE CITY OF ST. PETE BEACH, FLORIDA PROVIDING AMENDMENT OF ARTICLE III, DIVISION 4, SECTIONS 2-281 THROUGH SECTIONS 2-295 OF THE ST. PETE BEACH CODE OF ORDINANCES; PROVIDING PURPOSE AND INTENT; UPDATING AND CLARIFYING THE DEFINITIONS; ESTABLISHING THE AUTHORITY AND DUTIES OF THE PROCUREMENT MANAGER; CLARIFYING THE AUTHORITY TO AWARD; UPDATING THE PROCUREMENT METHODOLOGY AND EMERGENCY PROCUREMENTS; CHANGING CONTRACT ADMINISTRATION; PRESCRIBING PROCUREMENT PROTESTS; ESTABLISHING A VENDOR SUSPENSION AND DEBARMENT PROCESS; PROVIDING FOR CODIFICATION; CONFLICTS; SEVERABILITY; CORRECTION OF SCRIVENER'S ERROR; CONSTRUCTION; PUBLICATION; AND AN EFFECTIVE DATE.

WHEREAS, the City Commission of the City of St. Pete Beach procurement regulations and procedures are established by Article III, Division 4, Sections 2-281 through 2-295 of the Code of Ordinances; and

WHEREAS, the City Manager recommends comprehensive changes to the City's procurement regulations and procedures for the purpose of effective and efficient administration; and

WHEREAS, Sections 2-281 through 2-295 of the Code of Ordinances are hereby amended as shown in EXHIBIT A; and

WHEREAS, the City Commission has determined the revised procurement regulations and procedures are in the City's best interest.

NOW, THEREFORE, THE CITY COMMISSION OF THE CITY OF ST. PETE BEACH, FLORIDA, HEREBY ORDAINS:

SECTION 1. Recitals. The above recitals ("Whereas" clauses) are hereby adopted as legislative findings, purpose and intent of the City Commission.

SECTION 2. Sections 2-281 through 2-295 of the Code of Ordinances are hereby amended as shown in EXHIBIT A to this Ordinance.

SECTION 3. Conflicts. All ordinances or parts of ordinances, in conflict herewith are hereby repealed to the extent of any conflict with the Ordinance.

SECTION 4. Severability. The provisions of this Ordinance are declared to be severable, and

if any section, sentence, clause or phrase of this Ordinance shall for any reason be held to be invalid or unconstitutional, such decision shall not affect the validity of the remaining sections, sentences, clauses, and phrases of this Ordinance as they shall remain in effect, it being the legislative intent that this Ordinance shall stand notwithstanding the invalidity of any part.

SECTION 5. Scrivener's Error. The City Attorney may correct scrivener's errors found in this Ordinance by filing a corrected copy of this Ordinance with the City Clerk.

SECTION 6. Construction. This Ordinance is to be liberally construed to accomplish its objectives.

SECTION 7. Publication**.** This Ordinance shall be published in accordance with the requirements of law.

SECTION 8. Effective Date. This ordinance shall take effect immediately upon adoption.

FIRST READING: _____
PUBLISHED: _____
SECOND READING: _____
PUBLIC HEARING: _____

CITY COMMISSION, CITY OF ST. PETE BEACH, FLORIDA.

_____
Adrian Petrila, Mayor

I, Renee Rose, City Clerk of the City of St. Pete Beach, Florida, do hereby certify that the foregoing Ordinance was duly adopted in accordance with the provisions of applicable law this _____ day of _____, 2025.

_____
Renee Rose, City Clerk

APPROVED AS TO FORM AND LEGAL SUFFICIENCY:

_____
Ralf Brookes, City Attorney

Items in ~~strikethrough~~ are to be deleted;
Items in <u>underline</u> are to be added.
*** indicates text that is unaltered but to be left out of the document for purposes of brevity.

EXHIBIT A

Existing Code of Ordinances, Article III, Division 4, Sections 2-281 through 2-295 is amended as follows:

DIVISION 4. PURCHASES AND CONTRACTS[1]

Editor's note— *Ord. No. 20-09, § 3, adopted July 28, 2020, repealed div. 4, §§ 2-281—2-286, and enacted a new division, as set out herein. The former division pertained to similar subject matter and derived from the Code of 1960, §§ 2-7, 2-59; Ord. No. 8, § 6; Ord. No. 308, § 9; Ord. No. 352, § 1; Ord. No. 81-1, § 1; Ord. No. 82-24, § 1; the Code of 1983, § 2-86(a)—(h); Ord. No. 84-15, § 1, adopted March 20, 1984; Ord. No. 86-29, § 1, adopted Aug. 5, 1986; Ord. No. 94-19, § 1, adopted June 7, 1994; Ord. No. 00-21, § 1, adopted June 20, 2000; and Ord. No. 11-05, § 2, adopted June 14, 2011.*

Sec. 2-281. Purpose and intent.

The purpose of this procurement ordinance is to maximize the value received for public funds through procurement; to provide safeguards for maintaining a procurement system of quality and integrity, such as cone of silence; and to provide for fair and equitable treatment of all persons involved in public procurement. It is the goal of the city to develop a comprehensive procurement system that will provide greater cost effectiveness and public accountability in the procurement process.

(Ord. No. 20-09, § 3, 7-28-20)

Sec. 2-282. Definitions.

For the purposes of this article, the following words and phrases shall be defined as follows:

Artistic services means the rendering by a contractor of its time and effort to create or perform an artistic work in the fields of music, dance, drama, folk art, creative writing, painting, sculpture, photography, graphic arts, craft arts, industrial design, costume design, fashion design, motion pictures, television, radio, or tape and sound recording.

Award means the acceptance of a bid or proposal by the proper authorized designee. The city commission must approve all awards over the authority of the city manager, with the exception of emergency purchases.

Bidder or *proposer* means an individual or business that submits a bid or proposal in response to a solicitation issued by the city.

Change order means a unilateral or bilateral written order amending a contract.

---

[1]Editor's note(s)—Ord. No. 20-09, § 3, adopted July 28, 2020, repealed div. 4, §§ 2-281—2-286, and enacted a new division, as set out herein. The former division pertained to similar subject matter and derived from the Code of 1960, §§ 2-7, 2-59; Ord. No. 8, § 6; Ord. No. 308, § 9; Ord. No. 352, § 1; Ord. No. 81-1, § 1; Ord. No. 82-24, § 1; the Code of 1983, § 2-86(a)—(h); Ord. No. 84-15, § 1, adopted March 20, 1984; Ord. No. 86-29, § 1, adopted Aug. 5, 1986; Ord. No. 94-19, § 1, adopted June 7, 1994; Ord. No. 00-21, § 1, adopted June 20, 2000; and Ord. No. 11-05, § 2, adopted June 14, 2011.

City means the City of St. Pete Beach, Florida.

City clerk means an individual appointed by the city commission to keep and have the care and custody of the books, records, papers, legal documents and journals of proceedings of the city commission.

City manager means the city manager of the City of St. Pete Beach, Florida or his designee.

Commission means the mayor and city commission of the City of St. Pete Beach, Florida.

Competitive negotiations means a one or two-step solicitation issued under the competitive sealed procurement process where proposals are sought and the city enters into competitive negotiations to determine the proposal that is most advantageous to the city.

Cone of silence means a prohibition on any communication in regards to a particular RFP, RPQ, RFQ or any other advertised solicitation between a potential proposer, offerer, respondent, bidder or consultant and the city's staff including, but not limited to, the city manager, selection/evaluation committee(s), mayor, city commission and their respective staff. The prohibition of communication shall be between the release of the solicitation and the end of the 72-hour period following the agency posting the notice of intended award, excluding Saturdays, Sundays, and state holidays.

Consultants' Competitive Negotiation Act (CCNA) means a state law governing the procurement of professional services performed by any architect, professional engineer, landscape architect or registered surveyor and mapper in connection with their professional practice (F.S. § 287.055, as amended).

Contract means all types of binding agreements, including purchase orders, executed by the city manager.

Contractor or *vendor* means any individual or business having a contract with the city.

Cooperative procurement means a procurement conducted by or on behalf of more than one public procurement entity.

Debarment means the exclusion of a person or company from participating in a procurement activity for an extended period of time because of previous illegal or irresponsible action.

Evaluation committee means a group of three or more persons appointed by the city manager to review proposals received in response to an RFP.

~~*Green business certified* means a bidder or proposer having a recognized and official third-party certification demonstrating environmental stewardship, such as the B corps certification.~~

~~*Invitation to bid (ITB)* means an advertised competitive solicitation which includes minimum qualifications and a definitive scope of work or precise specifications, where award(s) is made to the lowest responsive and responsible bidder.~~

Notice of intent to protest means the written notice by a contractor or vendor of their intent to protest to a competitive procurement decision pursuant to section 2-293 of this article. Proof of notice shall be a time stamped copy of a delivery receipt by e-mail, proof of mailing by the postal service, or private delivery service shall constitute proof of notification.

Procurement means the buying, purchasing, renting, leasing or otherwise acquiring of any supplies, services, or construction. It also includes all functions that pertain to the obtaining of any supply, service, or construction including description of requirements, selection and solicitation of sources, preparation and award of contract.

Procurement manager means the person holding the position as defined by the procurement ordinance section 2-283 authority and duties of the procurement manager.

Professional services (excluding CCNA) means any service where the city is obtaining advice, instruction or specialized work from an individual or business specifically qualified in a particular area where the main thrust is in intellectual ability, and whose profession is regulated by the State of Florida. Such services do not lend themselves

solely to price competition but to qualifications and price. Including but not limited to legal services, accountants, etc.

Protest means a written complaint presented to the procurement manager in reference to the award of a contract which resulted from an RFP, RFQ, or bid.

Protestor means a person or entity that submits a formal, written document submitted by an interested party to challenge the notice of intended decision to a competitive procurement.

Public entity means any agency of the federal, state, any local government, or any nonprofit organization.

Purchase manual means the written purchasing procedures and practice to use in processing goods and services for the city.

Request for Bid (RFB) means an advertised competitive solicitation which includes minimum qualifications and a definitive scope of work or precise specifications, where an award is made to the lowest responsive and responsible bidder.

Request for price quote (RPQ) means an informal solicitation where written responses are obtained from businesses, without formal advertising or receipt of sealed bids.

Request for proposals (RFP) means a written solicitation used for competitive procurement of proposals for commodities and/or services for which the scope of work, specifications, or contractual terms and conditions cannot always be defined. The most advantageous proposer will be selected.

Request for qualifications (RFQ) means a formal solicitation typically used for professional services where the initial ranking and selection is based on businesses qualifications without price being used as a factor.

Responsible bidder or *proposer* means any person, firm or corporation who has the capability in all respects to fully perform the contract requirements.

Responsive bidder means any individual or business who has submitted a response which conforms in all material respects to the solicitation.

Single source procurement means the purchase of a good or services for which there is no other vendor who can compete, and an equal product or service is not available from any other source.

Solicitation means an invitation to bid, request for proposal, request for quotation or any document issued by the city for the purpose of obtaining bids, proposals, or other offers from businesses for the purposes of procurement.

Submittal means the document(s) submitted by a bidder or proposer in response to a solicitation.

(Ord. No. 20-09, § 3, 7-28-20)

Sec. 2-283. Exemptions.

The following shall be exempt from the procurement ordinance:

(1) Federal or State of Florida funded or governed procurements where their rules and regulations supersede this article (e.g., Consultants' Competitive Negotiation Act).

(2) Contracts for those professional services specified in the city Charter, as well as hiring of independent contractors under the Charter.

(3) Procurements for utility services.

(4) Real estate property.

(5) Persons retained as expert consultants.

(6) City-sponsored events at venues not owned by the city, inclusive of rental of the facility, and all other associated goods and services.

(7) Entertainment services for city-sponsored events.

(8) Purchase of groceries for declared emergencies.

(9) Donation of goods and services from 501(C)(3) not-for-profit organizations.

(10) Service on any of the city committees.

(11) Artistic services.

(12) Office supplies

(13) Debt Service Payments

(14) Postage

(15) Building rent

(16) Insurance payments

(17) Training and Seminars

(18) Travel expenses

(19) Any procurement under State of Florida purchasing agreements and contracts. Procurement may also be through contracts competitively awarded by counties or municipalities within the state if the vendors agree to provide the City of St. Pete Beach, FL the same goods or services, under the same conditions, terms and prices.

(20) Services of attorneys and other legally related services, including legislative consultants. Contracts for attorney services and other legal services shall be secured by negotiation of the county attorney as approved by the board of county commissioners.

(21) Appraisers, and expert witnesses for condemnation matters, and similar services; sale, acquisition or lease of real property; real estate brokers; title insurance, abstracts or opinions or title; surveys in connection with acquisition, sale or lease of real property. Contracts for these services shall be negotiated by the county attorney.

(22) All heavy equipment repairs. The department/division shall request and evaluate the quotations and make the recommendation for award.

(23) Service/Maintenance Contracts: Continuing service and/or maintenance contracts that are initially awarded by the City Commission as part of a product acquisition/installation to a vendor who is the manufacturer, developer, or who is the authorized service agent thereof and for which funds are annually appropriated in the budget are exempt from further competitive requirements. Examples are software/hardware maintenance, building systems maintenance, security systems, etc.

(24) Software. Upgrades, software modification services by the copyright holder, and related software enhancements to installed software purchased through competitive means are exempt. The purchase of new software packages or systems shall follow the thresholds and procedures of the policy to ensure competitive selection.

(25) Payroll, personnel, full or part-time, whether in the classified service or not.

(26) Travel arrangements and expenses.

(27) Petroleum products (fuel and oil).

(28) Procurement of banking services for any bond or loan issuance, refund, or other related activities.

(29) Purchases made with the proceeds from any grant, gift, bequest, or donation to the extent the application of this chapter would conflict with the requirements, conditions, or limitations attached to the grant, gift, bequest, or donation.

(30) Agreements between the City and other entities for economic development services, grants, incentive programs, redevelopment agreements, and other development awards approved by the City Commission

(Ord. No. 20-09, § 3, 7-28-20)

Sec. 2-284. Authority and duties of the procurement manager.

The city manager shall have the authority to appoint a procurement manager who shall have authority for the implementation of procurement policies, procedures and the day-to-day management of procurement activities in accordance with the provisions of Florida Statutes applicable to local government entities, which shall include, but not be limited to:

(1) Procure or facilitate the procurement of all goods and services.

a. Determine the best procurement methodology.

b. Issue solicitations.

c. Determine if solicitation responses are responsive and assist in the determination of responsibility.

d. Manage the evaluation, selection and award process.

e. Recommend the award of solicitations, except for solicitation where proposals are reviewed by an evaluation committee and the recommendation of award is provided by the evaluation committee.

~~f. Recommend the renewal of contracts by the city manager.~~

g. Assist in the development of specifications/scope of work and ensure, to the extent practical, that they are competitive.

(2) Development/implementation/administration of procurement policies and procedures, and operations manuals.

~~(3) Manage contract compliance including, but not limited to, contract performance, required insurance coverage, payment of subcontractors, resolution of disputes, claims, and protests.~~

~~(4) Manage the evaluation vendor/contractor performance process.~~

(5) Perform other duties as may be assigned or directed by the city manager or designee.

The city manager and mayor retain sole authority to execute contracts, agreements, purchase orders, and change orders as referenced in section 3.03 and 4.04 of the city's Charter.

(Ord. No. 20-09, § 3, 7-28-20)

Sec. 2-285. Authority to award.

Approval authority is based on the value of the award. Requirements for goods or services shall not be broken down into lesser amounts to avoid approval authority.

(1) The city manager shall be authorized to award the following without submittal to the city commission:

a. Contracts for goods and services, including professional services, up to $25,000.00 procured in accordance with this article.

b. Change orders where the city commission has authorized the city manager to expend additional budgeted funds, for the goods or services, at the time of the initial award; where the cumulative amount does not exceed the city manager's approval authority; and the total cumulative value of the contract including the amendment(s) and change orders does not exceed $25,000.00.

c. Emergency procurements procured in accordance with the provisions of this article. All such purchases exceeding $~~1~~25,000.00 shall be reported to the city commission ~~within 30 business days of such action.~~ By the City Manager as soon administratively feasible.

d. Exercise contract options to renew where such authority has been delegated at the time of initial award approval by the city commission if required.

e. Reject all submittals or waive any minor irregularities contained in the submittals or in the solicitation process.

(2) The following items require authorization by the city commission:

a. All contracts exceeding the city manager's authority.

b. Change orders in excess of the city manager's authority.

(3) The city commission may reject the city manager's recommendation of award and reject all bids or proposals or award a bid or proposal as determined by the City Commission to be in the best interest of the City~~.~~

(Ord. No. 20-09, § 3, 7-28-20)

Sec. 2-286. Procurement methodology.

~~(a) *Purchases to be authorized by the city manager.*~~

~~(1) Purchases not exceeding $2,500.00 shall require payment approval by a department director.~~

~~(2) Purchases in excess of $2,500.00, up to $25,000.00, shall require three RPQs and a purchase order authorized by the city manager.~~

~~(b) *Competitively sealed procurements.* Procurements in excess of $25,000.00 shall require competitive solicitation, except as otherwise provided in this division.~~

~~(1) Solicitation documents will be published on the city's website. Other resources may also be utilized, including online bidding platforms, cooperative resource-sharing pools and newspaper advertisements.~~

~~(2) ITBs shall be awarded to the lowest responsive and responsible bidder as determined by the city manager.~~

~~(3) Competitive negotiations will be awarded to the proposer providing the most advantageous proposal to the city, as determined by the city manager.~~

~~(4) RFPs and RFQs shall be awarded to provide for the city's best interest, as determined by the city manager.~~

~~(5) Submittals will be received by the city clerk. The city clerk will open the submittals at the stated time in the presence of the procurement manager. The name of the bidder or proposer shall be read aloud and recorded in writing.~~

(1) *Purchases to be authorized by the City Manager.*

a. *Micro-Purchase Threshold.* Purchases not exceeding $5,000.00 may be made without competitive quotes, but the price must be considered reasonable. Purchases at or below the micro-purchase threshold shall require payment approval by a Department Director.

b. *Simplified Acquisition Threshold.* Purchases in excess of $5,000.00, up to $50,000.00, shall require a minimum of three informal competitive quotes (RPQ's). Purchases between the micro-purchase threshold and the simplified acquisition threshold shall require a purchase order authorized by the City Manager.

c. *Competitive Proposal Threshold.* Purchases in excess of $50,000.00 shall require competitive solicitation (RFP's, RFB's, RFQ's), except as otherwise provided in this section.

(i.) Solicitation documents will be published on the City's website. Other resources may also be utilized, including online bidding platforms, cooperative resource-sharing pools and newspaper advertisements.

(ii.) RFB's shall be awarded to the lowest responsive and responsible bidder unless there is justification to award to a different vendor as recommended by the City Manager.

(iii.) Competitive negotiations will be awarded to the proposer providing the most advantageous proposal to the City, as recommended by the City Manager.

(iv.) RFPs and RFQs shall be awarded by an Evaluation Committee to provide for the City's best interest, as recommended by the City Manager.

(v.) Submittals will be electronically sealed bids submitted through the online bidding system utilized by the City. The Procurement Manager will open the submittals at the stated time in the presence of a representative of the City Clerk's Office or their alternate. The name of the bidder or proposer shall be read aloud and recorded in writing.

(c) *Architectural and engineering services.* All such services shall be procured in accordance F.S. § 287.055, as amended, (the "CCNA").

(d) ~~[~~*Authorization.*~~]~~ The city manager may request written authorization from the city commission to waive the requirements of this division based on specific circumstances where it is not practical to comply with the requirements of this division.

(Ord. No. 20-09, § 3, 7-28-20)

Sec. 2-287. Post-award.

Contract amendment(s) which provide for the alteration of specifications or similar provisions of a contract, without changing the original scope of the project, may be approved by the city manager if the total cumulative value of the contract including the amendment(s) does not exceed $25,000.00. Otherwise, city commission approval will be required.

(Ord. No. 20-09, § 3, 7-28-20)

Sec. 2-288. - Emergency and Declared State of Emergency procurements.

1. Emergency Procurements.

All normal procurement procedures and requirements may be suspended in accordance with the provisions of City's Charter and Code of Ordinances during an emergency, and authorize the emergency procurement of goods or services, using the most efficient and effective procurement methods, when there exists a clear and present danger to public health, safety, welfare, or other substantial loss to the city. The City Commission shall be notified, after the fact, of such procurement in excess of $25,000.00. Such notification shall include the basis for the emergency, the contractor's name, the amount and type of contract, and the number of the purchase order or contract, if any.

(2) Declared State of Emergency Procurements.

All normal procurement procedures and requirements may be suspended in accordance with the provisions of City's Charter and Code of Ordinances during a declared state of emergency, and authorize the emergency procurement of goods or services, using the most efficient and effective procurement methods, in the event of or in anticipation of a natural disaster or catastrophic event. The City Commission shall be notified of such procurement in excess of $25,000.00 after the fact. Such notification shall include a full written report of the circumstances of the declared state of emergency.

a. The City Manager may request another municipality to purchase for the City any needed emergency supplies, materials or equipment or the City may purchase from another municipality any needed emergency supplies, materials or equipment such municipality has available.

b. Purchases made during a declared federal emergency shall be consistent with the Code of Federal Regulations, 44 CFR 13.36, as amended.

~~**Sec. 2-288. Emergency procurements.**~~

~~(a) All normal procurement procedures and requirements may be suspended in accordance with the provisions of city's Charter and Code of Ordinances during a declared state of emergency, and authorize the emergency procurement of goods or services, using the most efficient and effective procurement methods, when there exists a clear and present danger to public health, safety, welfare, or other substantial loss to the city. The city commission shall be notified, after the fact, of such procurement in excess of $25,000.00. Such notification shall include the basis for the emergency, the contractor's name, the amount and type of contract, and the number of the purchase order or contract, if any.~~

~~(b) Declared state of emergency procurements.~~

~~(1) In the event of or in anticipation of a natural disaster or catastrophic event, the city manager is authorized to declare a state of emergency for purchasing purposes and suspend all normal procurement procedures and requirements and authorize the emergency procurement of goods or services, using the most efficient and effective procurement methods.~~

~~(2) The city manager may request another municipality to purchase for the city any needed emergency supplies, materials or equipment or the city may purchase from another municipality any needed emergency supplies materials or equipment such municipality has available.~~

~~(3) Purchases made during an emergency exceeding $25,000.00 shall be reported by the city manager at the next regularly scheduled city commission meeting with a full written report of the circumstances of the emergency.~~

~~(4) Purchases made during a declared federal emergency shall be consistent with the Code of Federal Regulations, 44 CFR 13.36, as amended.~~

~~(Ord. No. 20-09, § 3, 7-28-20)~~

Sec. 2-289. Contracts with other public/non-profit entities.

The city manager may authorize the purchase of goods and services from current contracts of other public, governmental, state/federal funded agencies, non-profit entities, or cooperative resource-sharing pools, where the contracts have resulted from a formal competitive procurement process and do not exceed $25,000.00. The procurement manager shall conduct an analysis to determine that the pricing under the contract is the most advantageous procurement method available to the city.

(Ord. No. 20-09, § 3, 7-28-20)

Sec. 2-290. Single source procurement.

Purchase of goods or services may occur without competition when the city manager makes a determination that the required goods or services are available from only one source or when it is determined that competitive bidding is not feasible or not advantageous to the city.

(Ord. No. 20-09, § 3, 7-28-20)

Sec. 2-291. Cooperative procurement.

The procurement manager may participate in, sponsor, conduct, or administer a cooperative purchasing agreement for the procurement of goods and services with one or more public entities. Cooperative procurement may include, but is not limited to, joint or multiparty contracts between public entities.

(Ord. No. 20-09, § 3, 7-28-20)

~~Sec. 2-292. Green business certified preference.~~

~~Green business certified bidders or proposers determined to be responsive and responsible shall have the opportunity for preference. For awards based solely on price, green business certified bidders who are not the original lowest bidders but are within five percent of the lowest responsive and responsible bid, shall have the opportunity to re-submit by matching the original lowest responsive and responsible bid. For awards based on additional criteria and determined by points, green business certified proposers will receive additional consideration not to exceed two percent of the total weighted criteria.~~

(Ord. No. 20-09, § 3, 7-28-20)

Sec. 2-292~~3~~. Contract administration.

(a) *Management.* City departments shall be responsible for the day-to-day management of all contracts and the initial resolutions of performance related issues. All issues related to contract interpretation shall be handled by the procurement manager. Where the vendor's performance potentially places it in default of its contract the department shall work with the procurement manager. The procurement manager shall notify the vendor in writing that its performance has placed it in potential default, and the procurement manager shall assist the department director in the resolution of the performance issues.

(b) *Disputes.* The city manager shall establish a procedure ~~(~~located in the city's ~~"~~purchase manual~~")~~ for the resolution of contract disputes, including applicable timelines, which provides provisions for the vendor to initially request a review and decision by the procurement manager, and then allow for an appeal of the procurement manager's decision to the city manager. The procedures shall mandate that this process must be followed prior to the vendor seeking relief through judicial means.

(c) *Evaluations.* The procurement manager shall establish a vendor performance evaluation program that will then be used in considering contract terminations, contract renewals, and future procurement awards.

(Ord. No. 20-09, § 3, 7-28-20)

Sec. 2-294.- - Protests.

The ~~procurement manager~~Procurement Manager shall establish written policies and procedures for protests of solicitations of $25,000.00 or less. Protests of solicitations in excess of $25,000.00 shall follow the below procedures:

(1)——— *Filing of ~~protest~~Protest.*

-a.——— The written protest must be filed with the ~~procurement manager~~Procurement Manager, with a copy to the ~~city clerk~~City Clerk, based on the following timeframes.

1.——— A prospective bidder/proposer who perceives that it is precluded from submitting a response to a solicitation due to the requirements of the solicitation, including the terms and conditions, specifications or drawings, may file a protest with the procurement manager. The protest shall be submitted to the ~~procurement manager~~Procurement Manager, with a copy to the ~~city clerk~~City Clerk, within four business days after the solicitation is either posted on the ~~city's~~City's website or an announcement is placed in a newspaper, whichever is earlier.

2.——— A prospective bidder/proposer who has submitted a solicitation response under the solicitation may protest the recommended award to the ~~procurement manager.~~Procurement Manager. The protest shall be filed with the ~~procurement manager~~Procurement Manager, with a copy to the ~~city clerk~~City Clerk, within four business days after notice has been sent to the bidder/proposer of the ~~city manager's~~City Manager's or ~~procurement manager's~~Procurement Manager's, as applicable, written recommendation of award. A time stamped copy of a delivery receipt by e-mail, proof of mailing by the postal service, or private delivery service shall constitute proof of notification. Actual receipt by the vendor of the notification shall not be required to trigger the time period for a protest.

A written protest received by the ~~procurement manager~~Procurement Manager after the stipulated timeframe shall not be considered. All timeframes in this section shall be strictly construed.

b.——— The written protest cannot challenge the established criteria for the minimum qualifications ~~or~~, evaluation ~~criteria~~ or the scoring of submittals during the evaluation process ~~based on the~~,, but protests may be allowed alleging that evaluation criteria~~.~~ were misapplied, inconsistently applied, or factually unsupported.

c.——— The written protest shall state with specificity the facts and law upon which the protest is based and shall include all pertinent documents and evidence and shall be accompanied by the required filing fee(s) as provided below. This shall form the basis for review of the written protest and no facts, grounds, documentation or evidence not contained in the protester's submission to the procurement manager at the time of filing the protest shall be permitted in the consideration of the written protest or any appeal thereof.

(2)——— *Authority to ~~resolve protests.~~ Resolve Protests.* The procurement manager shall have the authority to settle and resolve timely protests. During the evaluation of the protest the procurement manager shall have the authority to obtain written clarification of the supporting documentation and evidence from the party submitting the protest~~.~~; provided, however, this is not an opportunity to the protester to introduce new grounds for the protest, but may include supporting documentation directly responsive to the City's request. The procurement manager shall have 15 business days to issue a written decision on the protest. A copy of the decision will be forwarded to the protester and filed with the city clerk.

(3)——— *Appeal of ~~procurement manager's~~Procurement Manager's written decision.*- The protestor may appeal the ~~procurement manager's~~Procurement Manager's written decision by filing a written request of appeal to the ~~city manager~~City Manager, with a copy to the ~~city clerk~~City Clerk, within three business days of notification of the procurement manager's written decision. Such notification shall comply with the timeline and proof of delivery as stipulated. The ~~city manager~~City Manager shall have 15 business days to issue a written decision on the protest, which shall be based on the pertinent documents and evidence submitted with the initial filing of the protest together with any clarifications obtained by the ~~procurement manager.~~Procurement Manager. A copy of the decision will be forwarded to the protestor and filed with the ~~city clerk.~~ City Clerk.

(4)——— *Appeal of ~~city manager's written decision.~~ City Manager's Written Decision.* The protestor may appeal the ~~city manager's~~City Manager's written decision after exhausting all administrative remedies to the ~~city commission~~City Commission by filing a written request for an appeal hearing to the ~~city clerk~~City Clerk, with a copy to the ~~city manager~~City Manager, within three business days of notification of the ~~city manager's~~City Manager's written decision. Such notification shall comply with the timeline and proof of delivery as stipulated. The following procedures shall apply for an appeal hearing to the ~~city commission:~~ City Commission:

a.——— The protester shall submit a written request that an appeal hearing be scheduled before the ~~city commission~~City Commission. The request must state the basis for the request and demonstrate that the protester has standing to bring the appeal. The basis for demonstrating standing in order to obtain an appeal hearing before the ~~city commission shall be limited to:~~ City Commission shall be based solely on the grounds set forth in the protest and the additional information supplied that was specifically requested by the City, and shall be limited to:

1.——— The decision does not follow established law or legal precedent.

2.——— The decision was not based on the requirements of the solicitation.

3.——— The decision was biased, arbitrary and/or capricious.

b.——— The ~~city clerk~~City Clerk will place the request for an appeal hearing and the appeal hearing on the next available ~~city commission~~City Commission agenda. Prior to the ~~city commission~~City Commission meeting the ~~city manager~~City Manager shall provide to the ~~city commission~~City Commission a written overview of the facts of the solicitation together with the decision rendered by the ~~city manager. The city commission's~~City Manager. The City Commission's first decision at this meeting will be to determine whether the protester has standing and sufficient merit to ~~schedule an appeal hearing on~~

~~the city commission's agenda.~~ continue on to the appeal hearing which shall be the next item on the City Commission's agenda. If the City Commission determines that there is standing and sufficient merit, the appeal hearing shall proceed forward; otherwise, the appeal hearing shall not take place. The action by the City Commission shall be final agency action.

~~c. Where the city commission determines that there is standing and sufficient merit, the city clerk shall schedule the appeal on the next available city commission agenda.~~

~~d. The city manager~~d. Prior to the City Commission meeting as described above, the City Manager will provide the city commission with a detailed report of the solicitation, the specifics of the protester's appeal and the details of the findings and determinations of the ~~procurement manager~~Procurement Manager and the ~~city manager~~City Manager including any clarification material obtained in response to a request by the ~~city~~City, prior to the appeal hearing by the ~~city commission.~~City Commission. The protester shall be provided the opportunity to make a presentation to the ~~city commission~~City Commission, which shall be limited solely to the facts and details included in the initial protest submittal and including any clarification material obtained in response to a request by the ~~city~~City. The protester shall be precluded from introducing any details, documents or information not included in the initial protest submittal except for any clarification material obtained in response to a request by the ~~city~~City. The ~~city commission~~City Commission shall base its decision on the existing record and facts as set for hearing.

(5) *Compliance with ~~protest procedures.~~ Protest Procedures.* Failure to comply with the stipulated timeframes for submission of ~~the notice of intent to file a protest or~~ the written protest, together with the required documentation and evidence, and the filing fee(s) stipulated below shall constitute the forfeiture of the protestor's right to protest. Appeal of ~~city commission~~City Commission decision may be taken to the appropriate court with jurisdiction pursuant to Florida Statutes and rules of procedure.

(6) *Costs and filing fees.*

a. *Written ~~protest.~~ Protest.* The written protest must be accompanied by a filing fee in the form of a money order or cashier's check in the amount of $200.00, where the value of award is estimated to be, or is less than $25,000.00. For protests where the value of award is estimated to be or is $25,000.00 or greater the money order or cashier's check in amount equal to $500.00 or two percent of the value of the bid/proposal, whichever is greater up to a maximum of $2,500.00.

b. *Appeal to the ~~city manager.~~ City Manager.* The written appeal to the ~~city manager~~City Manager must be accompanied by a filing fee in the form of a money order or cashier's check in the amount $200.00, where the value of award is estimated to be or is less than $25,000.00. For appeals where the value of award is estimated to be or is $25,000.00 or greater, the money order or cashier's check in amount equal to $500.00 or two percent, whichever is greater, up to a maximum of $2,500.00.

c. *Appeal to the St. Pete Beach City Commission.* The written request for an appeal to the ~~city commission~~City Commission must be accompanied by a filing fee in the form of a money order or cashier's check in the amount $500.00, or two percent, whichever is greater, up to a maximum of $2,500.00.

d. *Refund of ~~filing fees.~~ Filing Fees.* All costs resulting from a protest shall be borne by the protestor. If a protest is upheld by either the ~~procurement manager~~Procurement Manager or ~~city manager~~City Manager, as applicable, the filing fee shall be refunded to the protestor less costs incurred by the ~~city~~City. If the protest is denied or the request for an appeal hearing before the ~~city commission~~City Commission is denied, the filing fee shall be forfeited to the ~~city~~City in lieu of payment of costs incurred by the ~~city.~~ City.

(7) *Stay of procurement. Procurement*. Upon the receipt of a written protest, the cityCity shall not proceed further with the solicitation pending resolution of the protest, unless the city managerCity Manager issues a written determination with specific factual findings that the solicitation process must continue to protect public safety, health, welfare, or the loss of funding.

(Ord. No. 20-09, § 3, 7-28-20)

Sec. 2-294. Protests.

The procurement manager shall establish written policies and procedures for protests of solicitations of $25,000.00 or less. Protests of solicitations in excess of $25,000.00 shall follow the below procedures:

(1) *Filing of protest.*

a. The written protest must be filed with the procurement manager, with a copy to the city clerk, based on the following timeframes.

1. A prospective bidder/proposer who perceives that it is precluded from submitting a response to a solicitation due to the requirements of the solicitation, including the terms and conditions, specifications or drawings, may file a protest with the procurement manager. The protest shall be submitted to the procurement manager, with a copy to the city clerk, within four business days after the solicitation is either posted on the city's website or an announcement is placed in a newspaper, whichever is earlier.

2. A prospective bidder/proposer who has submitted a solicitation response under the solicitation may protest the recommended award to the procurement manager. The protest shall be filed with the procurement manager, with a copy to the city clerk, within four business days after notice has been sent to the bidder/proposer of the city manager's or procurement manager's, as applicable, written recommendation of award. A time stamped copy of a delivery receipt by e-mail, proof of mailing by the postal service, or private delivery service shall constitute proof of notification.

A written protest received by the procurement manager after the stipulated timeframe shall not be considered.

b. The written protest cannot challenge the minimum qualifications or evaluation criteria or the scoring of submittals during the evaluation process based on the evaluation criteria.

c. The written protest shall state with specificity the facts and law upon which the protest is based and shall include all pertinent documents and evidence and shall be accompanied by the required filing fee(s) as provided below. This shall form the basis for review of the written protest and no facts, grounds, documentation or evidence not contained in the protester's submission to the procurement manager at the time of filing the protest shall be permitted in the consideration of the written protest or any appeal thereof.

(2) *Authority to resolve protests.* The procurement manager shall have the authority to settle and resolve timely protests. During the evaluation of the protest the procurement manager shall have the authority to obtain written clarification of the supporting documentation and evidence from the party submitting the protest. The procurement manager shall have 15 business days to issue a written decision on the protest. A copy of the decision will be forwarded to the protester and filed with the city clerk.

(3) *Appeal of procurement manager's written decision.* The protestor may appeal the procurement manager's written decision by filing a written request of appeal to the city manager, with a copy to the city clerk, within three business days of notification of the procurement manager's written decision.

~~Such notification shall comply with the timeline and proof of delivery as stipulated. The city manager shall have 15 business days to issue a written decision on the protest, which shall be based on the pertinent documents and evidence submitted with the initial filing of the protest together with any clarifications obtained by the procurement manager. A copy of the decision will be forwarded to the protestor and filed with the city clerk.~~

~~(4) *Appeal of city manager's written decision.* The protestor may appeal the city manager's written decision after exhausting all administrative remedies to the city commission by filing a written request for an appeal hearing to the city clerk, with a copy to the city manager, within three business days of notification of the city manager's written decision. Such notification shall comply with the timeline and proof of delivery as stipulated. The following procedures shall apply for an appeal hearing to the city commission:~~

~~a. The protester shall submit a written request that an appeal hearing be scheduled before the city commission. The request must state the basis for the request and demonstrate that the protester has standing to bring the appeal. The basis for demonstrating standing in order to obtain an appeal hearing before the city commission shall be limited to:~~

~~1. The decision does not follow established law or legal precedent.~~

~~2. The decision was not based on the requirements of the solicitation.~~

~~3. The decision was biased, arbitrary and/or capricious.~~

~~b. The city clerk will place the request for an appeal hearing on the next available city commission agenda. Prior to the city commission meeting the city manager shall provide to the city commission a written overview of the facts of the solicitation together with the decision rendered by the city manager. The city commission's decision at this meeting will be to determine whether the protester has standing and sufficient merit to schedule an appeal hearing on the city commission's agenda.~~

~~c. Where the city commission determines that there is standing and sufficient merit, the city clerk shall schedule the appeal on the next available city commission agenda.~~

~~d. The city manager will provide the city commission with a detailed report of the solicitation, the specifics of the protester's appeal and the details of the findings and determinations of the procurement manager and the city manager including any clarification material obtained in response to a request by the city, prior to the appeal hearing by the city commission. The protester shall be provided the opportunity to make a presentation to the city commission, which shall be limited solely to the facts and details included in the initial protest submittal and including any clarification material obtained in response to a request by the city. The protester shall be precluded from introducing any details, documents or information not included in the initial protest submittal except for any clarification material obtained in response to a request by the city. The city commission shall base its decision on the existing record and facts as set for hearing.~~

~~(5) *Compliance with protest procedures.* Failure to comply with the stipulated timeframes for submission of the notice of intent to file a protest or the written protest, together with the required documentation and evidence, and the filing fee(s) stipulated below shall constitute the forfeiture of the protestor's right to protest. Appeal of city commission decision may be taken to the appropriate court with jurisdiction pursuant to Florida Statutes and rules of procedure.~~

~~(6) *Costs and filing fees.*~~

~~a. *Written protest.* The written protest must be accompanied by a filing fee in the form of a money order or cashier's check in the amount of $200.00, where the value of award is estimated to be,~~

~~or is less than $25,000.00. For protests where the value of award is estimated to be or is $25,000.00 or greater the money order or cashier's check in amount equal to $500.00 or two percent of the value of the bid/proposal, whichever is greater up to a maximum of $2,500.00.~~

~~b. *Appeal to the city manager.* The written appeal to the city manager must be accompanied by a filing fee in the form of a money order or cashier's check in the amount $200.00, where the value of award is estimated to be or is less than $25,000.00. For appeals where the value of award is estimated to be or is $25,000.00 or greater, the money order or cashier's check in amount equal to $500.00 or two percent, whichever is greater, up to a maximum of $2,500.00.~~

~~c. *Appeal to the St. Pete Beach City Commission.* The written request for an appeal to the city commission must be accompanied by a filing fee in the form of a money order or cashier's check in the amount $500.00, or two percent, whichever is greater, up to a maximum of $2,500.00.~~

~~d. *Refund of filing fees.* All costs resulting from a protest shall be borne by the protestor. If a protest is upheld by either the procurement manager or city manager, as applicable, the filing fee shall be refunded to the protestor less costs incurred by the city. If the protest is denied or the request for an appeal hearing before the city commission is denied, the filing fee shall be forfeited to the city in lieu of payment of costs incurred by the city.~~

~~(7) *Stay of procurement.* Upon the receipt of a written protest, the city shall not proceed further with the solicitation pending resolution of the protest, unless the city manager issues a written determination that the solicitation process must continue to protect public safety, health, welfare, or the loss of funding.~~

~~(Ord. No. 20-09, § 3, 7-28-20)~~

Sec. 2-29~~5~~4. Suspension and debarment.

The city manager shall, after written notice to a contractor or vendor having a contract with or seeking to do business with the city, have the authority to suspend or debar such vendor, contractor, individual, or company from receiving award of contracts from the city.

(1) *Suspension.* The city manager may, after consultation with the procurement manager and city attorney, suspend a bidder/proposer from receiving award of contracts where the city manager believes there is probable cause for debarment. Such suspension shall remain in effect pending a determination on debarment. The maximum period for a suspension shall not exceed one year.

(2) *Debarment.* The city manager may, after consultation with the procurement manager and city attorney, debar a business or individual from receiving award of contracts for a period of not more than five years. The basis for debarment includes, but is not limited to:

a. Conviction for obtaining or attempting to obtain a public or private contract though fraudulent means.

b. Conviction of financial crimes or other offenses indicating a lack of business integrity.

c. Default on a city contract.

d. Repeated failure to perform in accordance with the requirements of city contract(s), where the failure to perform diminished the quality of the goods or services received by the city and the city's documentation clearly reflects the vendor has been notified of their failure(s) to perform, the vendor has been provided the opportunity(ies) to correct its performance, and has failed to do so.

e. Collusion in obtaining or attempting to obtain a city contract.

f. Refusal to perform under a city contract.

g. Repeated failure to provide insurance or bonds to the city where required for the award of a contract or required to be maintained by a city contract.

h. Businesses that are owned by or employ an individual that has been debarred by the city.

i. Businesses and individuals debarred by other public or governmental entities.

j. Any other reason deemed serious enough by the city manager to justify debarment.

k. Any documentation outlining non-conformity with Senate Bill 180 passed July 2025 as it pertains to procurement or the City's Charter.

(3) *Documentation of debarment or suspension.* The city manager shall provide a written document stating the basis for the debarment or suspension which shall be forwarded to the business or individual who has been debarred or suspended, with a copy provided to the city clerk. The letter shall also state that the action taken can be appealed to the city manager for reconsideration.

(4) *Appeal.* The business or individual (appellant) who has been debarred or suspended may submit an appeal once during the term of the debarment or suspension. The appeal must include all documentation to demonstrate that the city manager's decision was incorrect, there were mitigating circumstances, or that the appellant has taken corrective action of a nature that the city manager should reconsider the debarment or suspension. Based on the appeal, the city manager shall issue a written decision to the appellant, with a copy to the city clerk, either denying the appeal, modifying, or terminating the term of the debarment or suspension. A business or individual appellant shall only be entitled to one appeal during the term of the debarment of suspension. An appeal of the city manager's decision may be filed with the appropriate court with jurisdiction pursuant to Florida Statutes and rules of court.

(Ord. No. 20-09, § 3, 7-28-20)

Secs. 2-295—2-319. Reserved.

CITY COMMISSION MEETING
CITY OF ST. PETE BEACH
COMMISSION CHAMBERS

Agenda Report

Agenda Title Name: Final Reading of Ordinance 2025-21: Amending Land Development Code standards pertaining to accessory structures and ancillary equipment, and nonconforming uses and structures, as well as allowing encroachment of stairs and balconies under specified circumstances

Action Request: **Motion Request:** Motion to [adopt/adopt with modification/deny/continue to [specify date certain]] Ordinance 2025-21.

Strategic Objective: Recovery, Resiliency & Sustainability

Date: December 16, 2025

Prepared By: Brandon Berry, Senior Planner

Through: Frances Robustelli, City Manager

Summary of Issue: No changes have been made to this ordinance since the December 2, 2025 meeting. As significant portions of this ordinance were previously cited by the Florida Department of Emergency Management for definition modifications and general corrections, and making such corrections were part of the commitment Staff formerly made to move forward Ordinance 2025-17, Staff is awaiting consent from involved parties prior to bringing this item forward for adoption. If consent is not received by December 16, Staff will request this item to be continued to a later meeting.

At the November 3, 2025 City Commission meeting, the City Commission conducted the first reading of Ordinance No. 2025-21. Prior to that meeting, updates were made to the ordinance title and several sections of the draft to improve clarity and better align the amendments with current redevelopment conditions citywide. The version presented today incorporates those refinements.

- Modifications to language for clarity and readability;
- Clarifying that nonconforming use-containing structures cannot be substantially improved, in addition to prohibitions on additions and other modifications;
- Prohibiting continued use of nonconforming accessory structures following elective redevelopment and changes in use; and,
- Permitting grandfathered residential and lodging uses that are nonconforming by unit count, which were lost to a catastrophic event, to be reconstructed with the same unit count subject to area and height restrictions within the later of one year of the event or 60 days following expiration of a state of emergency that caused the catastrophic loss. This provides some parity for those uses with the development tolling provisions required by the State of Florida, which often extend rights for several years following a natural emergency declaration.

Funding: N/A

Attachments: 1. Ordinance 2025-21 - Markup

ORDINANCE NO. 2025-21

AN ORDINANCE OF THE CITY OF ST. PETE BEACH, AMENDING THE ST. PETE BEACH LAND DEVELOPMENT CODE SECTIONS 3.10., 6.13., 6.14., AND 6.22. TO INCREASE FRONT YARD STAIR ENCROACHMENTS FOR SPECIFIED RESIDENCES, ALLOW RETENTION OF NONCONFORMING BALCONY FOOTPRINTS AND SPECIFIED NONCONFORMING RESIDENTIAL ACCESSORY STRUCTURES FOLLOWING SUBSTANTIAL IMPROVEMENT TO THE PRIMARY RESIDENCE, CLARIFY RESTRICTIONS ON NONCONFORMING USES AND AMEND RESTRICTIONS ON ELEVATED AND SUBSTANTIALLY-IMPROVED NONCONFORMING STRUCTURES, MODIFY RESIDENTIAL STORAGE BUILDING STANDARDS, MODIFY RESIDENTIAL EQUIPMENT SETBACK STANDARDS, AND PROVIDE A FRONT YARD SETBACK LINE ALTERNATIVE FOR RESIDENTIAL CUL-DE-SAC AND CURVED STREET LOTS; PROVIDING FOR SEVERABILITY, CODIFICATION AND SCRIVENER'S ERRORS, AND PROVIDING FOR AN EFFECTIVE DATE.

WHEREAS, the City of St. Pete Beach occasionally finds land development standards in need of updating.

WHEREAS, residential neighborhoods City-wide are experiencing significantly more redevelopment and both voluntary and mandatory elevation than any time in the past several decades due to effects of the 2024 hurricanes, which can carry significant challenges.

WHEREAS, the City Commission of the City of St. Pete Beach finds the proposed modifications to development standards are not of a nature that will create significant additional visual burden on abutting properties, are reasonable in scale and scope, and will assist with accelerating neighborhood reoccupancy, which promotes the public health and welfare.

NOW, THEREFORE, THE CITY COMMISSION OF THE CITY OF ST. PETE BEACH FLORIDA, HEREBY ORDAINS:

SECTION 1. Recitals. The above recitals ("Whereas" clauses) are hereby adopted as legislative findings, purpose and intent of the City Commission.

Words ~~stricken~~ through shall be deleted. Words <u>underscored</u> constitute the amendment proposed. The symbol *** constitutes code sections not shown for purposes of brevity. Remaining provisions are now in effect and remain unchanged.

SECTION 2. The Land Development Code is amended as shown in EXHIBIT A to this Ordinance.

SECTION 3. Codification. This Ordinance shall be codified in the Land Development Code of the City of St. Pete Beach.

SECTION 4. Conflicts. All ordinances or parts of ordinances, in conflict herewith are hereby repealed to the extent of any conflict with the Ordinance.

SECTION 5. Severability. The provisions of this Ordinance are declared to be severable, and if any section, sentence, clause or phrase of this Ordinance shall for any reason be held to be invalid or unconstitutional, such decision shall not affect the validity of the remaining sections, sentences, clauses, and phrases of this Ordinance as they shall remain in effect, it being the legislative intent that this Ordinance shall stand notwithstanding the invalidity of any part.

SECTION 6. Scrivener's Error. The City Attorney may correct scrivener's errors found in this Ordinance by filing a corrected copy of this Ordinance with the City Clerk.

SECTION 7. Construction. This Ordinance is to be liberally construed to accomplish its objectives.

SECTION 8. Publication**.** This Ordinance shall be published in accordance with the requirements of law.

SECTION 9. Effective Date. This ordinance shall take effect immediately upon adoption.

FIRST READING: _____
PUBLISHED: _____
SECOND READING: _____
PUBLIC HEARING: _____

CITY COMMISSION, CITY OF ST. PETE BEACH, FLORIDA.

_____
Adrian Petrila, Mayor

Words ~~stricken~~ through shall be deleted. Words <u>underscored</u> constitute the amendment proposed. The symbol *** constitutes code sections not shown for purposes of brevity. Remaining provisions are now in effect and remain unchanged.

I, Renee Rose, City Clerk of the City of St. Pete Beach, Florida, do hereby certify that the foregoing Ordinance was duly adopted in accordance with the provisions of applicable law this _____ day of _____, 2025.

_____
Renee Rose, City Clerk

APPROVED AS TO FORM AND LEGAL SUFFICIENCY:

_____
Ralf Brookes, City Attorney

Words ~~stricken~~ through shall be deleted. Words underscored constitute the amendment proposed. The symbol *** constitutes code sections not shown for purposes of brevity. Remaining provisions are now in effect and remain unchanged.

EXHIBIT A

Sec. 3.10. Vested rights and nonconformities.

The purpose of this section is to regulate the continued existence of certain uses and structures established prior to the effective date of this Code that do not conform to these regulations. It is the intent of this Code to permit legally nonconforming uses and structures to continue in existence until they are removed or abandoned.

To avoid undue hardship, nothing in this Code shall be deemed to require a change in the plans, construction or designated use of any structure on which actual construction was lawfully begun prior to the effective date of this Code, or amendment thereto, and upon which actual building construction has continued unabated since inception of such construction, pursuant to valid building permits issued therefor.

(a) *Nonconforming lots.* In any district in which single-family dwellings are permitted, notwithstanding limitations imposed by other provisions of this Code, except as provided below, a single-family dwelling and customary accessory buildings may be erected on any lot of record as of the adoption date of this Code. This provision shall apply even though such lot fails to meet the requirements for lot width or area, or both, that are generally applicable to the district, provided that the building setbacks and other requirements shall conform to the regulations for the district in which the lot is located.

(b) *Nonconforming structures.* Where a lawful structure exists at the time of adoption or amendment of this Code which could no longer be built under the terms of this Code by reason of restrictions on lot area, impervious surface, height, or other such characteristics, such structure may continue to be used so long as it remains otherwise lawful, subject to the following provisions:

(1) No such structure may be enlarged, altered or improved in a manner which increases its nonconformity, except for the conditions set forth for elevating an existing structure in subsection (3)~~A~~a. below.

(2) Any nonconforming structure which suffers substantial damage, as defined in this Code, shall only be repaired, restored or reconstructed in a manner which brings the entire structure into compliance with all requirements of this Code and other applicable codes of the city, except as provided in subsection (3)~~D~~d. below.

Words ~~stricken~~ through shall be deleted. Words underscored constitute the amendment proposed. The symbol *** constitutes code sections not shown for purposes of brevity. Remaining provisions are now in effect and remain unchanged.

(3) Should such nonconforming structure be moved, either vertically or horizontally, it shall comply with the following:

~~A~~a. The structure may be moved, vertically only, such that the lowest habitable floor is elevated to or above the required ~~design flood elevation~~base flood elevation plus freeboard, as ~~defined and~~ established in the city's flood damage prevention regulations set forth in Chapter 98 of the Code of Ordinances. Additionally, the existing habitable ground floor of the structure beneath the required ~~design~~ base flood elevation plus freeboard may be converted to parking, storage and building access if in compliance with the structure's flood zone and the habitable floor(s) are reconstructed above.~~,~~ When a structure proposed for such reconstruction is located within one or more required yard setbacks, the portion(s) of the structure reconstructed within those yard setback(s) shall possess no additional habitable floors, nor exceed the pre-reconstruction footprint of, the structure. However, both elevated and reconstructed structures may be permitted additions that are compliant with current required setbacks and all other applicable regulations~~, above~~. ~~Compliance shall be as required for the structure's flood zone and degree of improvement or damage, including elevation on or conversion to open foundations comprised of piles, posts, piers, or columns for substantially-improved or damaged structures in the VE and Coastal A zones as applicable, and installation of flood vents and flood-resistant materials below the design flood elevation for substantially-improved or damaged structures in the AE zone as applicable.~~ Reconstruction and elevation shall comply with all Florida Building Code and floodplain ordinance requirements for the structure's flood zone. Under no circumstances shall the resulting structure exceed the maximum height allowed by the zoning district.

~~B~~b. The structure shall be moved, horizontally only, such that no additional nonconformities are created, and no existing non-conformities are increased, by such relocation; and

~~C~~c. The structure shall be located on the property so that there is a setback of at least three feet from the nearest property line on all sides of the structure. Any additions to the structure made during or subsequent to the elevation or reconstruction of the structure, other than reconstruction of the habitable floor(s) of the structure above required ~~design~~ base flood elevation plus

---

Words ~~stricken~~ through shall be deleted. Words underscored constitute the amendment proposed. The symbol *** constitutes code sections not shown for purposes of brevity. Remaining provisions are now in effect and remain unchanged.

freeboard when reconstruction is undertaken, shall comply with the existing required setbacks for the structure's zoning district.

~~D~~d. When a residential structure that is nonconforming solely by means of setback(s) suffers substantial damage or is electively substantially improved and the requirements of subsections (3)~~A~~a. through ~~C~~c. preceding can be met, the structure may be eligible for a vertical move, elevation or reconstruction as set forth above but shall comply with all applicable floodplain management regulations and building codes.

~~E~~e. ~~When subsection (3)A or D above is utilized, if the applicant cannot reasonably construct stairs to access the first living level without encroaching into the front setback, the applicant may be permitted to construct stairs without an independent roof overhang the required front yard. Stairs shall not encroach more than ten feet into the required front yard unless additional encroachment is demonstrated as necessary to avoid conflict with garage access or correct a safety issue. Under no circumstances shall stairs authorized through this permission be located closer than three feet to any property line.~~ Elevation or habitable floor reconstruction as permitted in subsection (3)a. or d. above shall also permit one newly-constructed staircase to encroach into the required front yard when the following criteria are met:

i. The subject structure is a single- or two-family residence; and,

ii. The portion of the stairs and associated landings that encroach into the required front yard are not independently roofed or covered by an independent roofing system, are not enclosed except via a Florida Building Code-compliant railing or balustrade, and provide an open base between the footing and treads or landing, defined as a space that is at least 80 percent transparent when accounting for supports and any other structural or architectural component of the stairs; and,

iii. The stairs, with landing and railing or balustrade, extend no higher than the first elevated or constructed living level within the front yard setback; and

iv. Any landing that encroaches into the required front yard is no more than six feet in width or the minimum width required by the Florida Building Code, whichever is greater; and,

---

Words ~~stricken~~ through shall be deleted. Words underscored constitute the amendment proposed. The symbol *** constitutes code sections not shown for purposes of brevity. Remaining provisions are now in effect and remain unchanged.

v. The stairs, with landings, project no more than seven feet from the front wall of the residence adjacent the entry and encroach no closer than ten feet to the front property line, or five feet to the front property line for stairs built at the front of residences constructed to the House-Large, House-Medium, or House-Small standards of the Pass-A-Grille Overlay District, or those residences granted a Certificate of Appropriateness from the Historic Preservation Board pursuant to Section 28.8; or,

vi. The stairs project into the required front yard setback area but extend no closer to the front property line than the front wall of the residence that is maintained upon elevation or reconstruction, and additionally provide at least a three-foot setback from the front property line.

f. When a residence possesses one or more balconies that extend into the required front or rear setbacks, and the residence's habitable floor(s) is or are elevated or reconstructed above the property's required base flood elevation plus freeboard, a balcony may be reconstructed in the same footprint, location, and with the same openness and means of ground support, as the existing balcony.

(4) Any nonconforming structure may be reinforced to make it resistant to hurricanes for the health safety and welfare of the public. These improvements include the addition of hurricane shutters, impact windows and doors, and hurricane straps.

(5) Ordinary repairs and maintenance may be made to a nonconforming structure provided that such repairs or maintenance do not constitute a substantial improvement as defined in the Land Development Code.

(c) *Nonconforming uses.* Nonconforming uses of land, structures and premises which were lawfully established prior to the adoption of this Code, but which are not permitted or are otherwise currently prohibited by this Code, may continue to operate at their present location until such time as such use has been discontinued. If the use is discontinued for more than 90 consecutive days or a total of 180 calendar days within a one-year period, subsequent use of the premises shall conform to the district regulations. Continuance of nonconforming uses are subject to the following provisions:

(1) Uses nonconforming by the type of use are regulated as follows:

Words ~~stricken~~ through shall be deleted. Words underscored constitute the amendment proposed. The symbol *** constitutes code sections not shown for purposes of brevity. Remaining provisions are now in effect and remain unchanged.

a. There shall be no increase of a nonconforming use by expansion of the use to adjacent properties, to other structures on the property, or to other portions of a multi-tenant structure within which the nonconforming use is located. No multi-tenant structure may be converted into a single-tenant structure for the purpose of expanding a nonconforming use.

b. No structure in which a nonconforming use is located shall be enlarged, altered, substantially improved or relocated to occupy other portions of the lot upon which it is located or to increase the size of the structure.

c. When a structure which is occupied by a nonconforming use suffers substantial damage, said structure, if repaired, restored or reconstructed, shall only be occupied, upon completion, by uses which are allowed in the zoning district in which the structure is located.

(2) Uses that are nonconforming by reason of development density are regulated as follows:

a. The recognized number of units on such property shall be determined by the number shown in the property records on file with the city as of the date of adoption of this section.

b. There shall be no increase in the number of units by expansion or alteration of the use.

c. Except as provided for elsewhere in this Code, any property, upon which there are one or more buildings having such pre-existing nonconforming number of units shall be brought into conformity with the density requirements of this ordinance when any building is proposed to be substantially improved.

(d) *Grandfathered nonconforming residential uses.* Not withstanding the provisions of paragraph (c)(2) above and paragraph (e) following, nonconforming residential properties having a greater number of units than currently allowed under the provisions of the comprehensive plan and this Code that are lost through a catastrophic event may be reconstructed with the same number of units as they had prior to the loss under the following conditions:

(1) For the purposes of this subsection only, transient accommodations shall be considered to be residential properties.

Words ~~stricken~~ through shall be deleted. Words <u>underscored</u> constitute the amendment proposed. The symbol *** constitutes code sections not shown for purposes of brevity. Remaining provisions are now in effect and remain unchanged.

(2) The applicant can verify to the satisfaction of the city that the property contained the number of units, square footage and height that are proposed for replacement;

(3) The replacement structure(s) shall be no larger in square footage, nor taller than the original structure, except that structure height may be increased by the ~~height of the base~~ distance between existing, established grade and the required base flood elevation plus required freeboard where necessary to comply with flood hazard mitigation requirements;

(4) Provided there are no conflicts with other codes and that no adverse impacts on adjacent properties will be created, the replacement structure(s) may be permitted to be constructed with the same footprint as the original structure(s);

(5) The replacement structure(s) shall meet all other local, state and federal requirements in place at the time of replacement; and

(6) Permits to rebuild under these provisions shall be obtained within one year of the catastrophic loss, or 60 days following the expiration of an executive order issued by the office of the governor that declared a state of emergency for the event that caused the catastrophic loss, whichever is later, unless a general extension of time has been granted by the city commission.

(e) *Nonconforming accessory structures.* No nonconforming accessory structure shall continue after the principal use or structure is terminated by abandonment, substantial damage, elective redevelopment, change of use, or destruction, except as provided below. In addition to the other provisions of this section applicable to nonconforming structures, the following additional conditions shall apply to nonconforming accessory structures:

(1) Any nonconforming accessory structure shall be brought into conformity with these regulations whenever ~~a substantial improvement to~~ the accessory structure is substantially improved as defined in this code. ~~or~~Nonconforming accessory structures shall also be brought into conformity with these regulations when the principal structure on the property is ~~proposed and approved~~substantially improved, excepting those accessory structures associated with a detached single-family residence in the RU-1, RU-2, RLM-1, RLM-2, or RM zoning districts when the following is met:

a. The accessory structure is a deck cover, gazebo, or pool that has not sustained substantial damage as defined in this code, and is not proposed to be substantially

improved in conjunction with or subsequent to the primary structure's substantial improvement; and,

b. The principal residence is substantially improved through elevation or conversion and reconstruction of the living level(s) of the residence; and,

c. The substantial improvement of the principal residence does not add more than ten percent in living square footage in conjunction with or subsequent to the substantial improvement, provided that this ten percent maximum excludes any living space added through the finishing of an existing attached garage or carport that shares the same roofline as the primary residence and is elevated or reconstructed; and,

d. The accessory structure is not located within an easement and does not cross any zoning lot property boundary.

(2) Notwithstanding the foregoing, any accessory structure which is designated and constructed as a garage, the principle purpose of which is the storage of motor vehicles for single-family residential purposes, which is substantially damaged as the result of a catastrophic event as defined in the Code of Ordinances, may be reconstructed in accordance with the criteria set forth in subsection (d) hereof.

(~~2~~3) Any nonconforming accessory structure which is destroyed or substantially damaged, shall, upon replacement, conform to all requirements of this Code and other applicable codes of the city. Any part of a nonconforming accessory structure which is destroyed or damaged to less than 50 percent of the value of such accessory structure may be repaired or restored if a permit for the repair or restoration is issued within 12 months of the date of the damage.

(f) *Repairs and maintenance; maintaining safe condition.* Repairs and maintenance of nonconforming structures are ~~permitted~~allowed.

Sec. 6.13. Residential accessory structures.

Accessory residential structures may be permitted only on zoning lots having one or more existing residential dwelling units and shall be regulated as follows:

***

Words ~~stricken~~ through shall be deleted. Words underscored constitute the amendment proposed. The symbol *** constitutes code sections not shown for purposes of brevity. Remaining provisions are now in effect and remain unchanged.

(b) *Residential storage buildings.* Residential storage buildings may be permitted as an accessory on a residential property. Only one such residential storage building is allowed, and the residential storage building shall be further regulated as follows:

(1) The residential storage building shall be used exclusively for storage of household items, and no mechanical equipment such as window air conditioning units that could render the space as habitable or for use for any other purpose than storage shall be operated within or attached to such building.

(2) The placement of a residential storage building shall require a building permit, meet all applicable building codes, and shall be properly anchored. When the primary structure on a residential property undergoes substantial improvement or redevelopment and an existing residential storage building is proposed to be maintained on the property in compliance with these regulations, or a residential storage building is substantially improved, the storage building shall be subject to the same requirements as if it were newly constructed.

(3) All storm water runoff shall be directed and maintained on the property upon which the building is located.

(4) The residential storage building shall be located a minimum of 60 feet from the front property line and 20 feet from the secondary front yard, provided no residential storage building shall be permitted within the required yard for a waterfront yard.

(5) Residential storage buildings shall be subject to the following dimensional and required yard requirements.

a. *Maximum size:* ~~80~~120 square feet in area.

b. *Maximum height:* Eight feet in height as measured from grade to the highest point on the structure.

c. *Location:* May be located along any side or rear property line, except in secondary front yards and waterfront yards as provided in paragraph (4) above; and must be separated at least six feet from any other accessory structure.

Words ~~stricken~~ through shall be deleted. Words underscored constitute the amendment proposed. The symbol *** constitutes code sections not shown for purposes of brevity. Remaining provisions are now in effect and remain unchanged.

Sec. 6.14. Encroachment of certain specified ancillary residential equipment into required yards.

(a) For the purpose of these regulations, ancillary equipment shall include but not be limited to generators, air conditioning compressors, and swimming pool and spa filters and pumps.

(~~a~~b) ~~Ancillary residential equipment installed no more than two feet above grade, such as but not limited to air conditioning compressors when permitted, swimming pool and spa filters and pumps, etc. shall be allowed to encroach into any required yards up to four feet, provided that any such equipment located in front of the residence shall be adequately shielded from the adjoining property by either a solid enclosure or solid fence or wall and no resulting setback shall be less than 3 feet from any property line.~~ Any residential ancillary equipment installed more than two feet above grade in any location for the first time, and any equipment installed more than two feet above grade that is associated with new construction of the residence to which it is associated, shall meet all required yard setbacks for the district in which it is located.

(~~b~~c) ~~Equipment newly installed more than two feet above grade shall not encroach into any required front or side yard setback.~~ New or replacement equipment that is eligible under the Florida Building Code and the floodplain management regulations to be installed at or near grade, including pool equipment where so authorized, may encroach into any required yard up to four feet provided that any equipment located in front of the residence is adequately shielded through a solid enclosure, fence or wall, and no resulting setback is less than three feet from any property line. When this permission is utilized, the equipment shall be elevated no more than two feet above grade.

(~~c~~d) ~~New elevated equipment on any new or substantially improved residential structures shall not encroach into any required yard setback. This shall apply to any equipment installed for new or substantially improved structures or to such items being installed for existing structures the first time.~~ When a residence is substantially improved and possesses permitted existing ancillary equipment that encroaches into a required yard, and when permitted existing ancillary equipment encroaches into a required yard and is voluntarily or is required to be elevated above the floodplain, it may be elevated in place subject to the following:

~~(d) Change-outs or in-place elevation of existing residential equipment located in the required rear or side yard of a structure legally nonconforming to the current required design flood elevation, that has sustained damage from a flood and is required by the Florida Building Code to be elevated above the floodplain, shall be permitted to be elevated in place subject to the following criteria. Equipment required to be elevated shall be as applicable in section 701.3(2) of the Florida Building Code, Existing, as may be amended, and shall include condensers, generators, and other exterior residential equipment and appliances damaged by~~

Words ~~stricken~~ through shall be deleted. Words underscored constitute the amendment proposed. The symbol *** constitutes code sections not shown for purposes of brevity. Remaining provisions are now in effect and remain unchanged.

~~flood, but shall not include pool equipment when permitted by the Florida Building Code to be installed below the required flood elevation.~~

(1) The bottom of the equipment shall be elevated no higher than one foot above the structure's lowest living floor, or required ~~design~~ base flood elevation plus freeboard, whichever is higher.

(2) The equipment shall encroach no farther into the required yard than the equipment it is replacing, except that minimum additional encroachment may be permitted to avoid conflict with existing projections located on the structure and/or roof eaves.

(3) If on a column or pedestal, the equipment with column or pedestal shall be located no closer than three feet from the property line.

(4) If on a bracket the equipment with bracket shall be located no closer than three feet from the property line or, if elevated on a bracket such that any projection is no lower than 6'-8" from adjacent grade, shall not encroach beyond the property line.

(5) The top of the equipment shall not exceed the height of the ridge of the roof of the structure to which it is attached or associated.

(6) ~~This provision shall not apply to residential structures that are new or substantially improved, which are regulated by (c), above.~~ The equipment, if located within the required front yard of the property, encroaches no more than five feet beyond the front wall of the residence.

Sec. 6.22. Yard and measurement requirements.

(a) *Required yards.* Examples of yards are shown in the illustration on the next page.

(b) *Encroachment of open balconies ~~and stairs~~.* Open balconies may be permitted to encroach into required front or rear yards a distance of three feet.

(c) Stairs that are independently roofed or covered by an independent overhang system shall meet all primary structure yard setback requirements for the zoning district in which they are located. Other stairs shall be permitted to encroach into required yards as follows:

(1) ~~Open~~ All stairs~~,~~ without independent roof or overhang systems~~,~~ may be permitted to encroach into any required yard setback a distance of three feet provided that no resulting setback shall be less than 2 feet from any property line.

(2) Residential single- or two-family homes possessing stairs meeting (1) preceding that also provide an open base between the footing and treads or landing, defined as a space that is at least 80 percent transparent when accounting for supports and any other structural or

---

Words ~~stricken~~ through shall be deleted. Words underscored constitute the amendment proposed. The symbol *** constitutes code sections not shown for purposes of brevity. Remaining provisions are now in effect and remain unchanged.

architectural component of the stairs, may encroach up to seven feet into the required front yard, provided the stairs are set no closer than two feet to the front property line. When the stairs include a landing that encroaches into the required front yard the landing shall be no wider than six feet, or the minimum width required by the Florida Building Code, whichever is greater.

***

(g) *Front yard setbacks for lots located on the turning circle of a cul-de-sac or specified curved streets.* When a property is located on the turning circle of a cul-de-sac or a concave curved intersection of two streets and has a zoning of RU-1, RU-2, RLM-1, RLM-2, or RM, the front property line for setback purposes, only, may be established by drawing a tangent line connecting the side property lines at the midpoint of the front arc. When this standard is used, the front setback from the tangent line may be 15 feet, as illustrated in the following graphic. Additionally, permitted encroachments provided for in this section may be established relative to this 15-foot front setback.

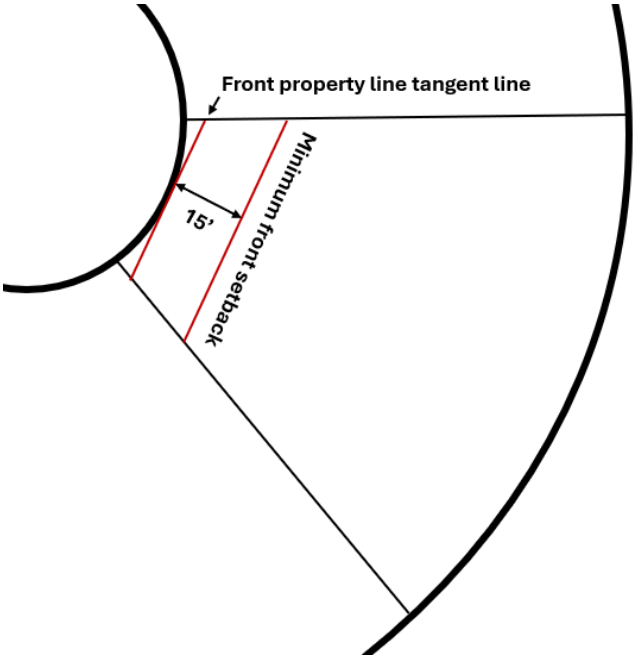

Words ~~stricken~~ through shall be deleted. Words underscored constitute the amendment proposed. The symbol *** constitutes code sections not shown for purposes of brevity. Remaining provisions are now in effect and remain unchanged.

CITY COMMISSION MEETING
CITY OF ST. PETE BEACH
COMMISSION CHAMBERS

Agenda Report

Agenda Title Name: Final Reading of Ordinance 2025-22: Adopting Land Development Code Sec. 6.26. pertaining to reasonable accommodations for certified recovery residences

Action Request: Motion to [adopt/adopt with modifications/deny/continue to [specify date certain]] Ordinance 2025-22.

Strategic Objective: Operational Excellence

Date: December 16, 2025

Prepared By: Vose Law
Brandon Berry, Senior Planner

Through: Frances Robustelli, City Manager

Summary of Issue: Senate Bill 954, signed in the 2025 legislative session, requires by January 1, 2026 that each municipality adopt an ordinance establishing procedures for the review and approval of certified recovery residences, prohibits public hearings for these residences beyond the minimum required by law, and requires municipalities establish a process to seek reasonable accommodation from any land use regulation that prohibits the establishment of a certified recovery residence. It also establishes timeframes for completeness determination and final decision on any reasonable accommodation required.

This ordinance is intended to satisfy the statutory requirements, while also setting some bounds on what constitutes a reasonable accommodation for administrative consideration purposes, such as only permitting the use where other residential and/or residential-equivalent uses are permitted, and prohibiting the uses from exceed the City's density standards.

Funding: N/A

Attachments: 1. Ordinance 2025-22: Markup

ORDINANCE NO. 2025-22

AN ORDINANCE OF THE CITY OF ST. PETE BEACH, FLORIDA, CREATING LAND DEVELOPMENT CODE SECTION 6.26. – CERTIFIED RECOVERY RESIDENCES; ESTABLISHING PROCEDURES FOR THE REVIEW AND APPROVAL OF CERTIFIED RECOVERY RESIDENCES AND A PROCESS FOR REQUESTING REASONABLE ACCOMMODATIONS FROM LOCAL LAND USE REGULATIONS AS MANDATED BY NEW FLORIDA STATUTE; PROVIDING FOR SEVERABILITY, CODIFICATION, CONFLICTS, AND AN EFFECTIVE DATE.

WHEREAS, Section 397.487(15)(a), Florida Statutes, ("the new Florida Statute") mandates that by no later than January 1, 2026, each municipality and county in the State of Florida must adopt an ordinance establishing procedures for the review and approval of certified recovery residences; and

WHEREAS, the new Florida Statute further mandates the inclusion within such ordinance of a process for requesting reasonable accommodations from any local land use regulation that serves to prohibit the establishment of a certified recovery resident; and

WHEREAS, the new Florida Statute provides that the regulation of the establishment of certified recovery residences must be consistent with the Fair Housing Amendments Act of 1988 (42 U.S.C. §§ 3601 et seq.) and Title II of the Americans with Disabilities Act (42 U.S.C. §§ 12131 et seq.); and

WHEREAS, this Ordinance is adopted for the purpose of compliance with Section 397.487(15)(a), Florida Statutes.

NOW THEREFORE, IT IS HEREBY ORDAINED BY THE CITY OF ST. PETE BEACH AS FOLLOWS:

Section 1. That the above recitals are true and correct and are incorporated herein by this reference.

Section 2. Section 6.26 of DIVISION 6 – SUPPLEMENTAL REGULATIONS of the City of St. Pete Beach Land Development Code shall be created and codified as follows: (Words that are ~~stricken out~~ are deletions; words that are underlined are additions.)

Section 6.26 - Certified Recovery Residences

(a) *Definitions*. The following terms shall be defined as follows:

1. *Certified recovery residence* means a residential dwelling that provides a peer-supported, alcohol-free, and drug-free living environment and is certified by a

credentialing entity approved by the Florida Department of Children and Families, pursuant to section 397.487, Florida Statutes.

a. A Level I certified recovery residence houses individuals in recovery who have completed treatment, with a minimum of 9 months of sobriety. A Level I certified recovery residence is democratically run by the members who reside in the home.
b. A Level II certified recovery residence encompasses the traditional perspectives of sober living homes. There is oversight from a house manager who has experience with living in recovery. Residents are expected to follow rules outlined in a resident handbook provided by the certified recovery residence administrator. Residents must pay dues, if applicable, and work toward achieving realistic and defined milestones within a chosen recovery path.
c. A Level III certified recovery residence offers higher supervision by staff with formal training to ensure resident accountability. Such residences are staffed 24 hours a day, 7 days a week, and offer residents peer-support services, which may include, but are not limited to, life skill mentoring, recovery planning, and meal preparation. Clinical services may not be performed at the residence. Such residences are most appropriate for persons who require a more structured environment during early recovery from addiction.
d. A Level IV certified recovery residence is a residence offered, referred to, or provided by, a licensed service provider to its patients who are required to reside at the residence while receiving intensive outpatient and higher levels of outpatient care. Such residences are staffed 24 hours a day and combine outpatient licensable services with recovery residential living. Residents are required to follow a treatment plan and attend group and individual sessions, in addition to developing a recovery plan within the social model of living in a sober lifestyle. No clinical services are provided at the residence and all licensable services are provided offsite.

2. *Reasonable accommodation* means a modification or exception to a local land use, zoning, or building regulation or policy, as necessary to afford individuals with disabilities equal opportunity to use and enjoy a dwelling. The authorization of a certified recovery residential use on a zoning lot where such use is prohibited shall not be approved administratively. Uses that require conditional use approval required under the Land Development Code shall not be approved administratively.

3. *Disability* shall have the same meaning as defined under the Fair Housing Amendments Act and the Americans with Disabilities Act.

(b) *Review Procedures*. The establishment of a certified recovery residence shall be subject to review and approval by the Community Development Department ("Department"), with such approval to be granted or withheld in compliance with all applicable local, state, and federal law, including the Fair Housing Amendments Act of 1988, 42 U.S.C.

ss. 3601 et seq., and Title II of the Americans with Disabilities Act, 42 U.S.C. ss. 12131 et seq. When not in conflict with the statutory timelines referenced in this section, all requests made under this procedure shall be reviewed administratively by departmental staff of the Technical Review Committee after receipt of a completed application, prior to issuance of a final written administrative determination.

(c) *Application Required*. An applicant seeking reasonable accommodation to establish or operate a certified recovery residence shall submit a written application to the Department. The application must include, at minimum:

1. Applicant Information: The name, mailing address, phone number, and email address of the applicant or the applicant's authorized representative.
2. Property Information: The address and parcel identification number of the subject property.
3. Accommodation Request: A description of the specific accommodation requested, including the applicable regulation or policy from which relief is sought, and an explanation of how the accommodation is necessary to afford equal housing opportunity.

(d) *Date-Stamping and Acknowledgement*. Upon receipt of the application, the Department shall date-stamp the application and provide written acknowledgment of receipt to the applicant.

(e) *Request for Additional Information*. If additional information is required from an applicant, the Department shall notify the applicant in writing within thirty (30) days of receipt of the application. The applicant shall respond to such request within thirty (30) days from the date of receipt of such notification.

(f) *Final Determination*. The Department shall issue a final written determination within sixty (60) days after receipt of a complete application, which shall:

1. Approve the request in whole, with or without conditions;
2. Approve the request in part, with or without conditions;
3. Deny the request, stating with specificity the objective, evidence-based reason for the denial and identifying any deficiencies or actions necessary for reconsideration.

(g) *Automatic approval*. If a final written determination is not issued by the Department within sixty (60) days after receipt of a completed application, the request shall be deemed approved by operation of law, unless the parties mutually agree in writing to a reasonable extension of time.

(h) *Revocation of accommodation*. The Community Development Department may revoke a previously granted reasonable accommodation for cause, including but not limited to violation of conditions of approval; lapse, revocation, or failure to maintain required certification or licensure under Florida law, if such status is not reinstated within one hundred eighty (180) days from lapse; and material misrepresentation of facts in the

application process. Applicants subjected to revocation shall be provided written notice of such revocation and shall have thirty (30) days upon receipt of written notice to respond contesting the validity of an accommodation revocation.

Section 3. If any section, subsection, sentence, clause, word, or phrase of this Ordinance is for any reason, declared by a court of competent jurisdiction to be unconstitutional or invalid, such decision will not affect the validity of the Ordinance as a whole, or any part thereof, other than the part so declared.

Section 4. All ordinances or parts of ordinances in conflict herewith are hereby repealed to the extent of such conflict.

Section 5. This Ordinance shall take effect immediately upon its adoption.

FIRST READING: _____

PUBLISHED: _____

SECOND READING: _____

PUBLIC HEARING: _____

CITY COMMISSION, CITY OF ST. PETE

BEACH, FLORIDA.

_____

Adrian Petrila, Mayor

I, Renee Rose, City Clerk of the City of St. Pete Beach, Florida, do hereby certify that the foregoing Ordinance was duly adopted in accordance with the provisions of applicable law this _____ day of _____, 2025.

_____

Renee Rose, City Clerk

APPROVED AS TO FORM AND LEGAL SUFFICIENCY:

_____

Ralf Brookes, City Attorney

CITY COMMISSION MEETING
CITY OF ST. PETE BEACH
COMMISSION CHAMBERS

Agenda Report

Agenda Title Name: Final Reading of Ordinance 2025-25: Amending Land Development Code Sec. 3.14 Appeals

Action Request: Motion to [adopt/adopt with modification/deny/continue to [specify date certain]] Ordinance 2025-25.

Strategic Objective: Economic Development and Smart Growth

Date: December 16, 2025

Prepared By: Ralf Brookes, City Attorney
Kristin Coman, Senior Planner

Through: Laura Canary, Community Development Director

Summary of Issue: At the direction of the city commission, this ordinance amends the appeals section of the Land Development Code to designate the city commission as the de facto hearing body for the appeal of administrative staff decisions. Appeals of decisions made by the city manager, or their designee, will be heard by the city commission.

Staff has also provided an option for the city commission to designate a special magistrate to hear the case, at the commission's discretion. This action will be taken for a specific appeal and shall not be automatic.

Funding: N/A

Attachments:
1. Ord 2025-25

Ordinance 2025-25

AN ORDINANCE OF THE CITY OF ST. PETE BEACH, FLORIDA PROVIDING FOR AMENDMENTS TO LAND DEVELOPMENT CODE 3.14 APPEALS; PROVIDING FOR CODIFICATION, CONFLICTS; SEVERABILITY; CORRECTION OF SCRIVENER'S ERRORS; CONSTRUCTION; PUBLICATION; AND AN EFFECTIVE DATE.

WHEREAS, the City's development regulations are intended to promote health and the general welfare,

WHEREAS, the City Commission desires to hear appeals of decisions made by the city manager where it is alleged that there is an error in an order, zoning permit, condition, requirement, decision or determination by the city manager in enforcing the Land Development Code rather than delegate the administrative appeal to a hearing officer or advisory board,

NOW, THEREFORE, THE CITY COMMISSION OF THE CITY OF ST. PETE BEACH, FLORIDA, HEREBY ORDAINS:

SECTION 1. Recitals. The above recitals ("Whereas" clauses) are hereby adopted as legislative findings, purpose and intent of the City Commission.

SECTION 2. The City Land Development Code 3.14 Appeals is amended as shown in EXHIBIT A to this Ordinance.

SECTION 3. Conflicts. All ordinances or parts of ordinances, in conflict herewith are hereby repealed to the extent of any conflict with the Ordinance.

SECTION 4. Severability. The provisions of this Ordinance are declared to be severable, and if any section, sentence, clause or phrase of this Ordinance shall for any reason be held to be invalid or unconstitutional, such decision shall not affect the validity of the remaining sections, sentences, clauses, and phrases of this Ordinance as they shall remain in effect, it being the legislative intent that this Ordinance shall stand notwithstanding the invalidity of any part.

SECTION 5. Scrivener's Error. The City Attorney may correct scrivener's errors found in this Ordinance by filing a corrected copy of this Ordinance with the City Clerk.

SECTION 6. Construction. This Ordinance is to be liberally construed to accomplish its objectives.

Items in ~~strikethrough~~ are to be deleted;
Items in <u>underline</u> are to be added.
*** indicates text that is unaltered but to be left out of the document for purposes of brevity.

SECTION 7. Publication**.** This Ordinance shall be published in accordance with the requirements of law.

SECTION 8. Effective Date. This ordinance shall take effect immediately upon adoption.

FIRST READING: _____
PUBLISHED: _____
SECOND READING: _____
PUBLIC HEARING: _____

CITY COMMISSION, CITY OF ST. PETE BEACH, FLORIDA.

_____
Adrian Petrila, Mayor

I, Renee Rose, City Clerk of the City of St. Pete Beach, Florida, do hereby certify that the foregoing Ordinance was duly adopted in accordance with the provisions of applicable law this _____ day of _____, 2025.

_____
Renee Rose, City Clerk

APPROVED AS TO FORM AND LEGAL SUFFICIENCY:

_____
Ralf Brookes, City Attorney

Items in ~~strikethrough~~ are to be deleted;
Items in <u>underline</u> are to be added.
*** indicates text that is unaltered but to be left out of the document for purposes of brevity.

EXHIBIT A – STRIKE THROUGH

Existing Land Development Code of Ordinances Section 3.14 is amended as follows:

Sec. 3.14. Appeals.

(a) An appeal to ~~a hearing officer designated by~~ the city commission may be taken by any person aggrieved by any final decision of the city manager of the city where it is alleged there is an error in an order, zoning permit, condition, requirement, decision or determination by the city manager in enforcing the Land Development Code. An appeal shall be filed in writing on or before 30 days from the day of the administrative decision. This section does not apply to building permits. As an alternative, the city commission may also appoint a special magistrate to hear appeals filed under this section and refer an appeal to the special magistrate on a case by case basis in the discretion of the city commission.

(b) Any person aggrieved by a final order of the city commission or any appointed board may appeal the order to the circuit court. The appeal shall be filed with the circuit court on or before 30 days following the issuance of the final development order.

(c) When an appeal is filed, all proceedings in furtherance of the action affected by the decision being appealed from shall be stayed, unless city manager certifies, after the notice of appeal has been filed with the city, that by reason of facts stated in the certificate, a stay would cause imminent peril to life or property.

(d) If the ~~hearing officer~~ city commission finds that said conditions exists, the ~~hearing officer~~ city commission may deny the stay and allow the administrative order to be executed.

~~(e) The city commission may appoint one or more hearing officers to hear appeals as provided in this section. Such hearing officers shall be attorneys licensed to practice law in all state courts of the State of Florida, and shall have been so licensed for a continuous period of at least five years up to the date of such appointment.~~

Items in ~~strikethrough~~ are to be deleted;
Items in underline are to be added.
*** indicates text that is unaltered but to be left out of the document for purposes of brevity.

CITY COMMISSION MEETING
CITY OF ST. PETE BEACH
COMMISSION CHAMBERS

Agenda Report

Agenda Title Name: First Reading of Ordinance 2025-24: Revising Code of Ordinances Chapters 131 & 132 Pertaining to Communication and Small Wireless Facilities

Action Request: Motion Options: Motion to [approve/approve with modification/deny/continue to [specify date certain]] the first reading of Ordinance 2025-24.

Strategic Objective: Reliable Infrastructure

Date: December 2, 2025

Prepared By: Ralf Brookes, City Attorney
Brandon Berry, Senior Planner

Through: Frances Robustelli, City Manager

Summary of Issue: The subject ordinance includes amendments to Wireless Facilities in Chapters 131 and 132 of the City Code of Ordinances, which regulate communication facilities on *private property* (Ch 132), and small wireless facilities in the *City-owned rights-of-way* (Ch 132), respectively. These amendments are intended to significantly increase local regulation of these facilities within the extent permitted by federal and state law. Broadly, these amendments are intended to achieve the following:

- Increase setbacks from and discourage locating most communication facilities near residential neighborhoods and other low-intensity and/or environmentally-sensitive areas;
- Limit the height of most facilities within residential areas, outside of City-owned rights-of-way, to the maximum height permitted for a building in the subject zoning district, and require fall radius setbacks of these facilities from existing or approved buildings;
- Increase application requirements for facilities that could adversely affect sightlines for existing developments;
- Require compliance verification with environmental reviews and historic preservation

considerations when facilities are located in a manner that could adversely affect these sites;
- Limit equipment on towers to the extent viable, excepting out those private rooftops that already contain most communication equipment; and
- Require additional post-construction certifications.

Two Florida statutes play key roles in setting standards that local governments must follow when considering permit applications for cell towers and other wireless facilities:

1. **F.S. § 365.172 applies to *all* wireless facilities.** "Emergency Communications Act," specifically subsection (13) "Facilitating emergency communications service implementation."

2. **F.S. § 337.401 applies only to wireless facilities in the right-of-way** – "Advanced Wireless Infrastructure Deployment Act." specifically subsection (7) "Use of right-of-way for utilities subject to regulation; permit; fees,"

Although quite restrictive, both statutes recognize the traditional authority of local governments over land use development and zoning restrictions. Both statutes contain provisions allowing for wireless ordinances that ensure greater protection for residents, communities, property values, aesthetic considerations, landscaping, historic districts, and the environment.

Ch. 131 - How the Proposed Revisions Comply With and Build on F.S. § 365.172 – "Emergency Communications Act"

F.S. § 365.172(13) provides the statutory framework for the proposed revisions to the Ordinance for both Chapter 131 (for wireless facilities on private property) and Chapter 132 (for such facilities in the right-of-way). Some notable examples of proposed revisions that build on this statutory framework include:

- Proposed Section 131-5(c) and (d) adopt the criteria set out in the statutory definition of "colocation" in colocation applications only subject to building permit review under the

statute. These new provisions ensure that such applications actually meet the statutory criteria for this type of less burdensome review.

- Proposed Section 131-5.(f) implements the voluntary waiver of timeframes a local government may request, but not require, pursuant to **F.S.§ 365.172(13)(d)3.c.** Nothing in the statute prevents local governments from requesting this waiver as a matter of course for all wireless facilities applications.
- Proposed Section 131-5.(g) establishes a completeness review process that leverages the requirement that a local government notify an applicant in writing that the application materials are not complete in compliance with the local government's regulations within 20 business days in **F.S. § 365.172(13)(d)3.a.**
- Proposed Section 132-16.(b)(8)i., "Guidance for location," uses the statutory allowance in F.S. § 365.172(13)(b)3. to restrict the placement of small wireless facilities, even for proposed facilities in the right-of-way, in residential areas as long as it is not an effective prohibition in that residential area.

Ch. 132- How the Proposed Revisions Comply With and Build on F.S. § 337.401 – Use of right-of-way for utilities subject to regulation; permit; fees.

Unlike F.S. § 365.172 which applies to all wireless facilities, F.S. § 337.401 only applies to the proposed revisions of Chapter 132 for wireless facilities located in the right-of-way.

Some notable examples of proposed revisions building on F.S. § 337.401 include:

- Proposed Section 132-7(d). "Permit application requirements, content, and review." The 14-day timeframe provision in **F.S. § 337.401(7)(d)7.** provides an opportunity to implement procedures for application completeness review. This completeness review procedure allows staff to focus solely on ensuring applicants have submitted all the items as per proposed Section 132-7.(a)(1)-(14).

- Proposed Section 132-14.(a)(1)d. addresses the exceptions to the permitting of micro-wireless facilities that ensure such proposed facilities will actually meet **F.S. § 337.401(7)(b)9's** statutory criteria setting the size limits for micro-wireless facilities.

- Proposed Section 132-15(a) adds new paragraphs (2), (3), and (4) that make use of the specified bases in **F.S. § 337.401(7)(b)11.a.-f.** on which the City may deny an application.

- Ordinance language quoting **F.S. § 337.401(7)(d)(2)** that the City may not require an applicant to provide more information than necessary to demonstrate compliance with applicable codes is deleted. The proposed revisions to the ordinance comply with the statutory limitations while allowing the City to protect residential areas.

Funding: N/A

Attachments:

1. Chapters 131 & 132 Markup
2. Ordinance 2025-24

Ordinance 2025-24

AN ORDINANCE OF THE CITY OF ST. PETE BEACH, FLORIDA PROVIDING FOR AMENDMENTS TO THE CODE OF ORDINANCES CHAPTER 131 WIRELESS COMMUNICATION TOWERS AND ANTENNAS AND CHAPTER 132 COMMUNICATION FACILITIES IN THE PUBLIC RIGHTS-OF-WAY; RENAMING CHAPTER 132 TO COMMUNICATION FACILITIES IN THE CITY RIGHTS-OF-WAY; PROVIDING FOR CODIFICATION, CONFLICTS, SEVERABILITY, CORRECTION OF SCRIVENER'S ERRORS, CONSTRUCTION, PUBLICATION, AND AN EFFECTIVE DATE.

WHEREAS, the City of St Pete Beach desires to update its wireless communications code to clarify guidelines, standards, and timeframes for the exercise of authority within statutory limitations to regulate wireless facilities that comply with FCC rules and Florida State laws for administrative review and approval of wireless facility permits.

NOW, THEREFORE, THE CITY COMMISSION OF THE CITY OF ST. PETE BEACH, FLORIDA, HEREBY ORDAINS:

SECTION 1. Recitals. The above recitals ("Whereas" clauses) are hereby adopted as legislative findings, purpose and intent of the City Commission.

SECTION 2. The City of St Pete Beach Code CHAPTER 131 WIRELESS COMMUNICATION TOWERS AND ANTENNAS is amended as shown in EXHIBIT A to this Ordinance.

SECTION 3. Codification. This Ordinance shall be codified in the Land Development Code of the City of St. Pete Beach.

SECTION 4. Conflicts. All ordinances or parts of ordinances, in conflict herewith are hereby repealed to the extent of any conflict with the Ordinance.

SECTION 5. Severability. The provisions of this Ordinance are declared to be severable, and if any section, sentence, clause or phrase of this Ordinance shall for any reason be held to be invalid or unconstitutional, such decision shall not affect the validity of the remaining sections, sentences, clauses, and phrases of this Ordinance as they shall remain in effect, it being the legislative intent that this Ordinance shall stand notwithstanding the invalidity of any part.

SECTION 6. Scrivener's Error. The City Attorney may correct scrivener's errors found in this Ordinance by filing a corrected copy of this Ordinance with the City Clerk.

SECTION 7. Construction. This Ordinance is to be liberally construed to accomplish its objectives.

SECTION 8. Publication**.** This Ordinance shall be published in accordance with the requirements of law.

SECTION 9. Effective Date. This ordinance shall take effect as provided by law.

FIRST READING: _____
PUBLISHED: _____
SECOND READING: _____
PUBLIC HEARING: _____

CITY COMMISSION, CITY OF ST. PETE BEACH, FLORIDA.

_____
Adrian Petrila, Mayor

I, Renee Rose, City Clerk of the City of St. Pete Beach, Florida, do hereby certify that the foregoing Ordinance was duly adopted in accordance with the provisions of applicable law this _____ day of _____, 2025.

_____
Renee Rose, City Clerk

APPROVED AS TO FORM AND LEGAL SUFFICIENCY:

_____
Ralf Brookes, City Attorney

Chapter 131 - WIRELESS COMMUNICATION TOWERS AND ANTENNAS

Sec. 131-1. - Purpose.

The purpose of this chapter is to establish general guidelines for the siting of wireless communications towers and antennas to accomplish the following objectives:

• To employ the "General Authority" preserved to the City of St. Pete Beach under 47 U.S.C. § 332(c)(7)(A) to the greatest extent the United States Congress intended while simultaneously complying with each of the substantive and procedural requirements set forth within the subsection 47 U.S.C. § 332(c)(7)(B).

• To employ the "General Authority" preserved to the City of St. Pete Beach under Fla. Const. art. VIII § 2(b) to the greatest extent the Florida Legislature intended to preserve those powers in F.S. § 166.021, specifically the broad exercise of home rule powers pursuant to subsection (4).

• To employ the "General Authority" preserved to the City of St. Pete Beach pursuant to F.S. § 365.172(b)1., the Emergency Communications Act, to review any applicable land development or zoning issues, including, but not limited to aesthetics, landscaping, land-use based priorities, structural design, and setbacks when considering applications for wireless communications facilities.

• To implement City of St. Pete Beach regulations related to the provision of wireless communications services, and the siting of their facilities.

• To assure compliance with the Federal Communications Commission's (FCC) legislative rules for Communication Facilities including those for radio frequency human exposure limits in 47 C.F.R. Part 1, Subpart I standards and those addressing State and Local Government Regulation of the Placement, Construction, and Modification of Personal Wireless Service Facilities, in 47 C.F.R. Part 1, Subpart U limitations associated with the regulation of the placement of towers that comply with those standards.

• To establish clear guidelines, standards, and timeframes for the exercise of the City of St. Pete Beach authority to regulate wireless facilities that comply with FCC rules and Florida State laws regarding reasonable timeframes for issuing decisions on wireless facility permits.

• To ensure that all wireless carriers providing facilities or services within the City of St. Pete Beach comply with the City of St. Pete Beach Code.

• To encourage the location of towers in non-residential areas;

• To minimize the total number of towers throughout the community;

• To strongly encourage the joint use of ~~new and~~ existing tower sites as a primary option rather than construction of additional ~~single-use~~ towers;

• To encourage users of towers and antennas to locate them, to the extent possible, in areas where the adverse impact on the community is minimal;

• To encourage users of towers and antennas to configure them in a way that minimizes the adverse visual impact of the towers and antennas through careful siting, design, ~~siting,~~ landscape screening, and innovative camouflaging techniques;

• To ~~enhance the ability of the providers of telecommunications services to provide such services to the community quickly, effectively, and efficiently;~~ recognize that technology and laws regarding these facilities have changed, so the city's regulations need to change accordingly;

• To ~~consider the public health and safety of communication towers~~ promote the health, public safety, comfort, convenience, prosperity, and general welfare of the people of City of St. Pete Beach; ~~and~~

• To avoid potential physical injury to the public and damage to adjacent properties from tower failure through engineering and careful siting of tower structures;

• To conserve and enhance the unique natural beauty, irreplaceable natural resources, historical, natural, and man-made character and appearance of The Don CeSar Hotel ("The Pink Palace"), Boca Ciega Bay Aquatic Preserve, Upham Beach Park, St. Pete Beach Community Center, Pass-a-Grille Historic District and Beach, Beach Theatre, and the City of St. Pete Beach; and

• To protect the beachfront, marinas, scenic and visual character of the city.

In furtherance of these objectives, City of St. Pete Beach shall give due consideration to the comprehensive plan, zoning map, existing land uses, and environmentally sensitive areas in approving sites for the location of towers and antennas.

This section is not intended to, nor shall it be interpreted or applied to: (1) prohibit or effectively prohibit any wireless carrier service provider's ability to provide reasonable and necessary wireless communications services; (2) prohibit or effectively prohibit any entity's ability to provide reasonable and necessary interstate or intrastate telecommunications service; (3) unreasonably discriminate among providers of functionally equivalent services; (4) deny any request for authorization to place, construct or modify wireless telecommunications service facilities solely on the basis of environmental effects of radio frequency emissions so long as such wireless facilities comply in every instance and regard with all FCC's regulations concerning such emissions; (5) prohibit any eligible facility that the City of St. Pete Beach may not deny under federal or state law; or (6) otherwise authorize the City of St. Pete Beach to violate any applicable federal or state law.

Sec. 131-2. - Definitions.

As used in this chapter, the following terms shall have the meanings set forth below:

Accessory equipment or antenna equipment means equipment other than antennas used in connection with a small wireless facility or other infrastructure deployment. This includes but is not limited to, equipment, switches, wiring, cabling, power sources, shelters or cabinets associated with an antenna, located at the same fixed location as the antenna, and, when collocated on a structure, is mounted or installed at the same time as such antenna. For purposes of an eligible facilities request as defined at 47

C.F.R. §1.6100(b)(3) only, the term includes "transmission equipment" as defined in 47 CFR. § 1.6100(b)(8), as may be amended or superseded.

Accessory facility or accessory structure means a facility or structure serving or being used in conjunction with a personal wireless services facility or complex and located on the same property or lot as the personal wireless services facility or complex, or an immediately adjacent lot including, but not limited to, utility or transmission equipment, storage sheds or cabinets.

ACIP means the Federal Advisory Council on Historic Preservation.

Aesthetic or *aesthetics* refers to subjective or objective determinations related to whether and if so how well a facility will fit within the character of the area where the facility is proposed. This requires a broad range of factors including but not limited to visual effects and impact on property values. The city will consider aesthetics for all applications and, where not prohibited by federal or state law, reserves the ability to impose careful placement conditions or restrictions.

Alternative ~~tower~~ wireless facility structure (also called "Concealment element") means manmade trees, clock towers, bell steeples, light poles and similar alternative-design mounting structures not necessary to the operation of the facility that is intended to camouflage or conceal the presence of antennas, ~~or~~ towers, or base stations. Alternative wireless facility structure or concealment is distinguished from other aesthetic requirements intended to minimize the visual impact of a facility.

Antenna means any ~~exterior transmitting or receiving device~~ apparatus designed for the purpose of emitting radiofrequency (RF) radiation, to be operated or operating from a fixed location, such as ~~mounted on~~ a tower, building, or structure, pursuant to FCC authorizations for the provision of personal wireless service and any commingled information services. ~~and used in communications that radiate or capture electromagnetic waves, digital signals, analog signals, radio frequencies (excluding radar signals), wireless telecommunications signals or other communication signals~~This definition does not apply to antennas designed for amateur radio use or satellite dishes for residential or household purposes.

Antenna facility means an antenna and associated antenna equipment.

Applicant means any individual, corporation, limited liability company, general partnership, limited partnership, estate, trust, joint-stock company, association of two or more persons having a joint common interest, or any other entity submitting an application for a wireless communication facility permit, site plan approval, building permit, and/or any other related approval, for the installation, operation and/or maintaining of one or more wireless telecommunication facilities.

Application means all necessary and required documentation and evidence that an applicant must submit to receive a wireless telecommunications facility permit, building permit, or other city approval for personal wireless service facilities from the city.

Balloon test means the raising of a balloon (or placement of a "crank up" tower, crane or temporary structure) equal to the height of a proposed personal wireless services facility tower for a period of 4 hours on a pre-determined date and time prior to approval of a wireless facility permit application to assess the visual impact of a proposed tower.

Base station means for purposes of eligible facilities requests, as defined in 47 C.F.R. §1.6100(b)(1), a structure or equipment at a fixed location that enables FCC-licensed or authorized

wireless communications between user equipment and a communications network. The term does not encompass a tower or any equipment associated with a tower.

CEQ: Federal Council on Environmental Quality as established under Federal NEPA law.

City means the City of St. Pete Beach.

City commissioners or commissioners mean the city commissioners of St. Pete Beach.

City manager means the person appointed by the city commission as the chief administrative official for the city or the designated representative thereof.

Coastal construction control line or CCCL means the line established so as to define that portion of the beach-dune system which is subject to severe fluctuations based upon a 100-year storm surge, storm waves, or other predictable weather pursuant to F.S. § 163.151(1)(a). Nonhabitable major structures seaward of this line shall be designed and constructed with the more restrictive applicable requirements of the Florida Building Code, Building section 3109 and section 1612 pursuant to SPB Section 98.129.2.

"Colocation," "colocate," or "collocation," "collocate" can have different meanings depending on context.

Where and when F.S. § 337.401 applies, the definition in § 337.401(b)(7) shall also apply. That definition currently states:

> "Collocate" or "collocation" means to install, mount, maintain, modify, operate, or replace one or more wireless facilities on, under, within, or adjacent to a wireless support structure or utility pole. The term does not include the installation of a new utility pole or wireless support structure in the public rights-of-way.

Where and when F.S. § 365.172 applies, the definition in § § 365.172(3)(f) shall also apply. That definition currently states:

> "Colocation" means the situation when a second or subsequent wireless provider uses an existing structure to locate a second or subsequent antennae. The term includes the ground, platform, or roof installation of equipment enclosures, cabinets, or buildings, and cables, brackets, and other equipment associated with the location and operation of the antennae.

Where and when the FCC's general rules for placement, construction and modification of personal wireless facilities apply, the definition in 47 C.F.R. § 1.6002(g) shall also apply. That definition currently states:

> Collocation, consistent with § 1.1320(d) and the Nationwide Programmatic Agreement (NPA) for the Collocation of Wireless Antennas, appendix B of this part, section I.B, means—
>
> > (1) Mounting or installing an antenna facility on a pre-existing structure; and/or
> >
> > (2) Modifying a structure for the purpose of mounting or installing an antenna facility on that structure.

(3) The definition of “collocation” in § 1.6100(b)(2) applies to the term as used in that section.

Where and when the FCC’s rules for wireless facility modifications apply, the definition in 47 C.F.R. § 1.6100(b)(2) shall also apply. That definition currently states:

(2) Collocation. The mounting or installation of transmission equipment on an eligible support structure for the purpose of transmitting and/or receiving radio frequency signals for communications purposes.

Communications tower or tower means a mast, pole, monopole, slim stick, guyed tower, lattice tower, freestanding tower, or other structure designed to support or employed to support antennas and other equipment, including but not limited to dishes, transceivers and arrays used to provide personal wireless services and wireless communications services. If building-mounted the building is not part of or considered a “tower.” A ground- or building-mounted mast greater than ten feet tall and six inches in diameter, supporting one or more antennas, dishes, arrays, etc. shall be considered a communications tower.

Complete application or Completed application means an application that contains all the necessary and required information, records, evidence, reports, and/or data necessary to enable an informed decision to be made with respect to an application, including each federal or state law that applies to that application. The application must state each federal statute or agency legislative rule that is claimed to apply and provide all facts necessary for the city to verify applicability and eligibility. Where any information is provided pursuant to the terms of this section and the permit technician determines that any additional, further or clarifying information is needed as to one or more aspects, then the application will be deemed incomplete until that further or clarifying information is provided to the satisfaction of Community Development staff and all related reviewing City departments. Every effort will be made to meet FCC and Florida shot clock requirements for completeness reviews provided that deemed complete status will not prevent the Reviewing Authority from denying an application on the merits due to lack of sufficient evidence to carry the applicant’s ultimate burden of proof.

Complex means the entire site or facility, including all structures and equipment, located at the site.

Concealment is an approach using elements intended to make the facility look like something other than a wireless tower or base station.

Consolidated application means more than one application for a wireless facility submitted at the same time.

DEP means Florida Department of Environmental Protection.

dBm means decibel milliwatts, which is a concrete measurement of the wireless signal strength of wireless networks. Signal strengths are recorded in negative numbers, and can range from approximately -30 dBm to -120 dBm. The closer the number is to 0, the stronger the cell signal.

Deployment means the placement, construction, or substantial modification of a wireless communications facility.

Distributed Antenna System or DAS means a network of spatially separated antenna nodes connected to a common source via a transport medium that provides personal wireless service within a geographical area.

Effective prohibition is as intended by 47 U.S.C. §332(c)(7)(B)(i)(II). The city will, if necessary, evaluate claims of prohibition or effective prohibition based upon an applicant's submission of sufficient probative, relevant, and sufficiently reliable evidence, and any other evidence in the record and apply the appropriate weight which the city deems appropriate to same. The applicant bears the burden of proving that a denial would prohibit or effectively prohibit the provision of personal wireless services. For discretionary permits the city reserves the right to deny an application based on aesthetic or other locational considerations such as unacceptable impact on the characteristics of the impacted neighborhood or any other "safe harbor" allowed by 47 U.S.C. §§253(b)-(c) and/or 332(c)(7)(B)(i)(II) even if the applicant has proven denial would prohibit or effectively prohibit the provision of personal wireless service.

Eligible facilities request means a request for modification (co-location, removal or replacement of transmission equipment) as defined in 47 CFR § 1.6100(b)(3) of an existing tower or base station wherein automatic approval of modifications that does not substantially change the physical dimensions of such tower or base station are mandated by 47 U.S.C. § 1455(a)(2), involving: (1) collocation of new transmission equipment; (2) removal of transmission equipment; or (3) replacement of transmission equipment.

FAA means the Federal Aviation Administration.

Facility or *personal wireless service facility* means an antenna facility or a structure that is used for the provision of personal wireless service, whether such service is provided on a stand-alone basis or commingled with other wireless communications services.This can include, but is not necessarily limited to, wireless transmitting and/or receiving equipment, any associated electronics and enclosing shelter or cabinet and stand-by generator or batteries.

FCC means the Federal Communications Commission.

FCC shot clock means the presumptively reasonable time frame within which the city must act on a wireless application, as defined by the FCC. The shot clock begins when the applicant takes the first procedural step that the city requires.

a. Aggregate of 60 days:

   1) Standby emergency generators at previously permitted macro cell tower sites.

   2) Collocation of small wireless facilities at existing small wireless facility sites.

   3) Eligible Facilities Requests.

b. Aggregate of 90 days:

   1) New small wireless facilities.

   2) Collocation applications for additions to existing communications facilities not defined as an eligible facilities request.

c. Aggregate of 150 days:

1) All other applications, such as development of a new communication tower or facility.

Florida shot clock means the statutory timeframe within which the city must act on a wireless application pursuant to F.S. § 365.172(13)(d). The Florida shot clock begins on the date when the city determines the application is properly completed.

a. Aggregate of 45 business days:

1. Colocations that do not increase the height of the tower to which the antennae are to be attached, measured to the highest point of any part of the tower or any existing antenna attached to the tower;

2. Colocations that do not increase the ground space area, commonly known as the compound, approved in the site plan for equipment enclosures and ancillary facilities; and

3. Colocations that consist of antennae, equipment enclosures, and ancillary facilities that are of a design and configuration consistent with all applicable regulations, restrictions, or conditions, if any, applied to the initial antennae placed on the tower and to its accompanying equipment enclosures and ancillary facilities and, if applicable, applied to the tower supporting the antennae.

b. Aggregate of 90 business days:

1. All other applications, including, but not limited to, colocations that do not meet the requirements in a. above, small wireless facilities, micro wireless facilities and the development of a new communication tower or other kind of facility.

General population/Uncontrolled exposure limits means the applicable radiofrequency radiation exposure limits set forth within 47 CFR §1.1310(e)(1), Table 1 Section (ii), made applicable pursuant to 47 CFR §1.1310(e)(3).

Height means, when referring to a tower, ~~or other structure, the distance measured from the finished grade of the parcel to the highest point on the tower or other structure, including the base pad and any antenna~~ personal wireless service facility, or personal wireless service facility structure, the height shall mean the distance measured from the pre-existing grade level to the highest point on the tower, facility, or structure, including, but not limited to, any accessory, fitting, fitment, extension, addition, add-on, antenna, whip antenna, lightning rod or other types of lightning-protection devices attached to the top of the structure.

Historic building, structure, site, object, or district means any building, structure, site, object, or district that has been officially designated as a historic building, historic structure, historic site, historic object, or historic district through a federal, state, or local designation program.

Illegally excessive RF radiation or Illegally excessive radiation means RF radiation exposures (whether from an individual source or multiple sources) at levels that exceed the limits set forth within 47 CFR §1.1310(e)(1), Table 1 Sections (i) and (ii), as made applicable pursuant to 47 CFR §1.1310(e)(3).

In-kind replacement means the replacement of a malfunctioning component(s) with a properly functioning component of substantially the same weight, dimensions, and outward appearance.

Macrocell means a cellular base station that typically sends and receives radio signals from large towers and antennas. These include traditionally recognized cell towers, which typically range from 50 to 300 feet in height.

Maintenance or routine maintenance means plumbing, electrical or mechanical work that may require a building permit but that does not constitute a modification to the personal wireless service facility. It is work necessary to assure that a wireless communications facility and/or structure exists and operates reliably and in a safe manner, presents no threat to persons or property, and remains compliant with the provisions of this chapter and FCC requirements.

Micro wireless facility means a small wireless facility having dimensions no larger than 24 inches in length, 15 inches in width, and 12 inches in height and an exterior antenna, if any, no longer than 11 inches.

Necessary or necessity or need means what is technologically required for the equipment to function as designed by the manufacturer, and that anything less will result in prohibiting the provision of service as intended and described in the narrative of the application. “Necessary” or “need” does not mean what may be desired, preferred, or the most cost-efficient approach and is not related to an applicant’s specific chosen design standards. Any situation involving a workable choice between or among alternatives or options is not a need or a necessity.

NEPA means the National Environmental Policy Act, 42 U.S.C. §4321 et seq.

NHPA means the National Historic Preservation Act, 54 U.S.C. 300101 et seq, and 36 CFR Part 800 et seq.

Node or DAS node means fixed antenna and related equipment installation that operates as part of a system of spatially separated antennas, all of which are connected through a medium through which they work collectively to provide personal wireless services, as opposed to other types of personal wireless facilities, such as macrocells, which operate independently.

~~*Non-residential zoning district* means the C-2 Tourist Residential, C-2A Tourist Commercial and C-3 General Commercial Zoning Districts.~~

Notice address means an address, which is required to be provided by an applicant at the time it submits an application for a wireless communications facility permit, at which the City can mail notice, and the mailing of any notice to such address by first-class mail shall constitute sufficient notice to any and all applicants, co-applicants, and/or their attorneys, to satisfy any notice requirements under this Section, as well as any notice requirements of any other local, state and/ or federal law.

Notice of effective prohibition conditions means a written notice which is required to be provided to the City at the time of the filing of any application for a wireless facility permit, by all applicants seeking any approval, of any type, for the siting, installation and/or construction of a wireless facility, wherein the respective applicant asserts, claims or intends to assert or claim, that a denial of their respective application, by any agent, employee, board or body of the city, would constitute an “effective prohibition”,

and concomitantly, that a denial of their respective application or request would violate Section 47 U.S.C. §332(c)(7)(B)(i)(II).

Notice of Incompleteness, Notice of Incomplete Application means a written notice, mailed by first class mail, to an applicant seeking an approval for the installation of a personal wireless services facility, wherein the sender advises the applicant that its application is either incomplete, missing required application materials, specifies the wrong type of wireless facility, or is otherwise defective, and setting forth the reason or reasons why the application is incomplete and/or defective.

Occupational/Controlled exposure limits mean the applicable radiofrequency radiation exposure limits set forth within 47 CFR §1.1310(e)(1), Table 1 Section (i), made applicable pursuant to 47 CFR §1.1310(e)(2).

Ordinance means wireless communications facility Ordinance of St. Pete Beach City.

Permit means wireless communications facility permit issued by St. Pete Beach City.

Permittee means the person(s) or entity(ies) to which a wireless facility permit is issued.

Personal wireless service/personal wireless services means commercial mobile services, unlicensed wireless services, and common carrier wireless exchange access services, within the meaning of 47 U.S.C. §332(c)(7)(c)(i), and as defined therein.

Personal wireless service facility or PWSF means a facility or facilities used for the provision of personal wireless services, within the meaning of 47 U.S.C. §332(c)(7)(C)(ii). It means a specific location at which a structure that is designed or intended to be used to house or accommodate antennas or other transmitting or receiving equipment is located. This includes, without limitation, towers of all types and all kinds of support structures, including but not limited to buildings, church steeples, silos, water towers, signs, utility poles, or any other structure that is used or is proposed to be used as a telecommunications structure for the placement, installation and/or attachment of antennas or the functional equivalent of such. It expressly includes all related facilities and equipment such as cabling, radios and other electronic equipment, equipment shelters and enclosures, cabinets, and other structures enabling the complex to provide personal wireless services.

Pre-existing towers and pre-existing antennas means any tower or antenna for which a building permit or special exception has been properly issued prior to the effective date of this chapter, including permitted towers or antennas that have not yet been constructed so long as such approval is current and not expired.

Probative evidence means evidence which tends to prove facts, and the more a piece of evidence or testimony proves a fact, the greater its probative value, as shall be determined by the city, as the finder-of-fact in determining whether to grant or deny applications for wireless communication facilities permits under this chapter of the City of St. Pete Beach Code. Generally speaking the city will require proof by a preponderance of the evidence to demonstrate a factual proposition to the city’s reasonable satisfaction.

Related third parties means any entity contracting with applicant for the design, construction, maintenance, use or operation of the proposed wireless facility, including such entity's officers, contractors, subcontractors, and agents or any subsidiaries, affiliates, successors in interest or legal assigns.

Repairs mean the replacement or repair of any components of a wireless facility or complex where the replacement is substantially identical to the component or components being replaced, or for any matters that involve the normal repair and maintenance of a wireless facility or complex without the addition, removal, or change of any of the physical or visually discernible components or aspects of a wireless facility or complex that will impose new visible intrusion of the facility or complex as originally permitted.

Residential dwelling means any dwelling unit that includes toilet or outhouse facilities, and facilities for food preparation and sleeping.

Residential property means any property that contains a residential dwelling.

RF means radiofrequency.

RF radiation means radiofrequency radiation, that being electromagnetic radiation which is a combination of electric and magnetic fields that move through space as waves, and which can include both non-ionizing radiation and ionizing radiation.

Reviewing authority means the body or official charged with taking final action on a permit. This can include Community Development, Zoning, Planning, Board of Adjustment or city commissioners.

School means the buildings and equipment, structures, and special educational use areas that are built, installed, or established to serve primarily the educational purposes and secondarily the social and recreational purposes of the community as defined in F.S. §1013.1(6), or any other educational facility that serves children from prekindergarten to grade 12.

Section 106 Review means a review under Section 106 of the National Historic Preservation Act.

Setback means for the purposes of a wireless communications facility permit application, a setback shall mean the distance between (a) any portion of a personal wireless facility and/or complex, including but not limited to any and all accessory facilities and/or structures, and (b1) the exterior line of any parcel of real property or part thereof which is owned by, or leased by, an applicant seeking a wireless communications facility permit to construct or install a personal wireless facility upon such real property or portion thereof, or (b2) for residential dwellings or school buildings, the closest edge or corner of the dwelling or building. In the event that an applicant leases only a portion of real property owned by a landlord, the setback shall be measured from the facility to the line of that portion of the real property which is actually leased by the applicant, as opposed to the exterior lot line of the non-leased portion of the property owned by the landlord. Setbacks from residential dwellings and school buildings shall be measured as the most direct, level, shortest, without regard to the intervening structures or objects, straight-line distance between the closest edge or corner of the residential dwelling or school building and the closest permitted structure of the wireless service facility.

Shot clock means the applicable period which is presumed to be a reasonable period within which the City is generally required to issue a final decision upon an application seeking wireless facility permit approval for the installation, substantial modification, or collocation of a personal wireless services facility or structure, to comply with Section 47 U.S.C. §332(c)(7)(B)(ii) and F.S. § 365.172(13)(d).

Site developer or site developers means individuals and/or entities engaged in the business of constructing wireless facilities and wireless facility infrastructure and leasing space and/or capacity upon,

or use of, their facilities and/or infrastructure to wireless carriers. Unlike wireless carriers, site developers generally do not provide personal wireless services to end-use consumers.

Small cell means a fixed cellular base station that typically sends and receives radio signals and which are mounted upon poles or support structures at substantially lower elevations than macrocell facilities.

Small wireless facilities means a wireless facility that meets the following qualifications:

a. Each antenna associated with the facility is located inside an enclosure of no more than 6 cubic feet in volume or, in the case of antennas that have exposed elements, each antenna and all of its exposed elements could fit within an enclosure of no more than 6 cubic feet in volume; and
b. All other wireless equipment associated with the facility is cumulatively no more than 28 cubic feet in volume. The following types of associated ancillary equipment are not included in the calculation of equipment volume: electric meters, concealment elements, telecommunications demarcation boxes,ground-based enclosures, grounding equipment, power transfer switches, cutoff switches, vertical cable runs for the connection of power and other services, and utility poles or other support structures.

Strand mounted antenna or strand mounted small cells means small wireless antenna(s) and equipment attached directly to the wire, that is, the metal strand, hanging between two utility poles. These are similar in size to cable operator's equipment that is placed on aerial cables.

Support structure means pole, tower, base station, or other building, whether or not it has an existing antenna facility, that is used or to be used for the provision of personal wireless service.

Thermal runway means self-heating of an electrochemical system in an uncontrollable fashion.

Tolling or tolled means the pausing of the running of the time period permitted under the applicable shot clock for the respective type of wireless facility as per 47 CFR § 1.6003(a) and per F.S. § 365.172(13)(d) by mutual agreement of the City and applicant waiving the applicable timeframes in F.S. § 365.172(13)(d)3.c..

Undertaking means any application for a wireless facility permit seeking City approval for the installation of a personal wireless services facility licensed under the authority of the FCC shall constitute an undertaking within the meaning of NEPA, in accord with 42 CFR § 137.289 and 36 CFR § 800.16.

Wireless carriers or carrier means companies that provide personal wireless services to end-use consumers.

~~*Tower* means any structure that is designed and constructed primarily for the purpose of supporting one or more antennas for telephone, radio and similar communication purposes, including self-supporting lattice towers, guyed towers, or monopole towers. The term includes radio and television transmission towers, microwave towers, common-carrier towers, cellular telephone towers, alternative tower structures, and the like. The term includes the structure and any support thereto.~~

Wireless communications facility or wireless facility means any equipment or facility used to provide service and may include, but is not limited to, antennae, towers, equipment enclosures, cabling, antenna

brackets, and other such equipment. Placing a wireless communications facility on an existing structure does not cause the existing structure to become a wireless communications facility.

Sec. 131-3. - Applicability.

(a) *New towers, ~~and~~ antennas, and wireless communications facilities*. All new towers, ~~or~~ antennas, and wireless communications facilities in the City of St. Pete Beach shall be subject to these regulations, except as provided in paragraphs (b) through (~~d~~e), inclusive.

(b) *Amateur radio station operators/receive only antennas*. This chapter shall not govern any tower, or the installation of any antenna, that is under ~~70~~ 45 feet in height and is owned and operated by a federally-licensed amateur radio station operator or is used exclusively for receive only antennas. This provision shall not be construed as exempting amateur radio station operators or receive only antennas from the provisions of any other applicable code or ordinance.

(c) *Pre-existing towers or antennas*. Pre-existing towers and pre-existing antennas shall not be required to meet the requirements of this chapter, other than the requirements of section 131- 4(f) ~~and (g)~~ (j). This provision shall also apply to the subsequent repair and maintenance of existing towers and antennas that were approved and erected under this chapter, provided such repair and maintenance do not result in any substantial alterations.

(d) *AM array*. For purposes of implementing this chapter, an AM array, consisting of one or more tower units and supporting ground system which functions as one AM broadcasting antenna, shall be considered one tower. Measurements for setbacks and separation distances shall be measured from the outer perimeter of the towers included in the AM array. Additional tower units may be added within the perimeter of the AM array by right.

(e) *Small and micro wireless facilities installed in City-owned rights of way.* This Chapter shall apply to communication facilities installed on private property and those small and micro wireless facilities that are installed outside of the City-owned rights of way. Regulations pertaining to small and micro wireless facilities that are installed in the City-owned rights of way shall be subject to the regulations listed in Chapter 132.

Sec. 131-4. - General requirements.

(a) *Principal or accessory use*. Antennas, ~~and~~ towers, and other wireless facilities may be considered either principal or accessory uses. A different existing use of an existing structure on the same lot shall not preclude the installation of an antenna or tower on such lot, provided that antennas and towers may not be installed on lots in residential areas unless the wireless provider demonstrates that the provider cannot reasonably provide its service to the residential area from outside the residential area.

(b) *Lot size*. For purposes of determining whether the installation of a tower or antenna complies with district development regulations, including but not limited to setback requirements, lot coverage requirements, and other such requirements, the dimensions of the ~~entire lot~~ that portion of real property which is actually leased by the applicant as opposed to the exterior lot line of the non-

leased portion of the property shall control~~, even though the antennas or towers may be located on leased parcels within such lot~~.

~~(c) *Inventory of existing sites*. Each applicant for an antenna and/or tower shall provide to the city manager an inventory of its existing towers, antennas, or sites approved for towers or antennas, that are either within the jurisdiction of City of St. Pete Beach or within one mile of the border thereof, including specific information about the location, height, and design of each tower. The city manager may share such information with other applicants applying for administrative approvals or special use permits under this chapter or other organizations seeking to locate antennas within the jurisdiction of City of St. Pete Beach, provided, however that the city manager is not, by sharing such information, in any way representing or warranting that such sites are available or suitable.~~

(d) *Aesthetics and design standards*. ~~Towers and antennas shall meet the following requirements:~~ Wireless facilities shall be designed in compliance with all applicable national and Florida safety standards and to minimize visual, noise, and other impacts on the surrounding community and landscapes in accordance with the design standards in this section.

(1) ~~Towers shall either maintain a galvanized steel finish or, subject to any applicable standards of the FAA, be painted a neutral color so as to reduce visual obtrusiveness.~~ The applicant shall employ screening and concealment design techniques in the design and placement of wireless facility(ies) and accessory equipment in order to ensure that the facility(ies) is as visually inconspicuous as possible, to prevent the facility(ies) from dominating the surrounding area and to hide the facility from predominant views from surrounding properties and viewsheds, all in a manner that achieves compatibility with the community and background landscapes and structures. Facilities and accessory equipment shall be finished in non-glare colors and non-reflective surfaces and colors that minimize their visibility to the greatest extent possible.

(2) At a ~~tower~~ wireless communications facility site, the visible exterior surface of the facilities and accessory equipment shall be designed to be visually compatible with structures typically found in the vicinity of the project. ~~t~~The design of the buildings and related structures shall, to the extent possible, use materials, colors, textures, screening, and landscaping that will blend them into the natural setting and surrounding buildings.

(3) If an antenna or other wireless facility is installed on a structure other than a tower, the antenna or other wireless facility and supporting electrical and mechanical equipment must be of a neutral color that is identical to, or closely compatible with, the color of the supporting structure so as to make the antenna and related equipment as visually unobtrusive as possible.

(4) Wall-mounted antennas and antenna equipment, including but not limited to radios, cables, associated shrouding, disconnect boxes, meters, microwaves, and conduit, shall be mounted as close to the wall as technically feasible and shall not extend more than four feet from the face of the wall nor consume more than fifty (50 sq. ft.) square feet per building face, excluding mountings. Pole-mounted antennas, and antenna equipment, antenna equipment, including but not limited to radios, cables, associated shrouding, disconnect boxes, meters, microwaves, and conduit, shall be mounted as close to the wall as technically feasible. They shall not be illuminated except as required by city, federal, or state authority.

(5) Small wireless facilities shall be sited to inflict the minimum adverse impacts upon individual residential or beachfront properties, and specifically, to minimize, to the greatest extent reasonably feasible, adverse aesthetic impacts upon residential homes or reductions in the property values of same. Small wireless facilities attached to pre-existing wooden and non-wooden poles shall conform to the following criteria. Proposed antenna and related equipment shall meet design standards which the city may maintain and update as needed, provided that the City of St. Pete Beach makes its designed standards publicly available for review by any potential applicant seeking approval for the installation of a small wireless facility within the City of St. Pete Beach.

(6) All facilities shall be engineered and certified by a Florida-licensed structural engineer to withstand local hurricane, seismic, wind, and loading conditions applicable to the site, and shall comply with wind and seismic load standards in accordance with Florida Building Codes and ANSI/TIA-222-H or its most current revision, National Electric Safety Code (NESC) standards, and National Electrical Code (NEC) standards.

(7) Wireless communication facilities shall be designed to minimize potential adverse impacts may or is likely to inflict upon nearby properties. No tower shall exceed the maximum height permitted for a structure in the RU-1, RU-2, RLM-1, RLM-2, RM, or DCR Districts, as listed in the applicable district regulations in the St. Pete Beach Land Development Code. Communications towers shall not be lighted except where FAA/FCC required lighting of the telecommunications towers is necessary. No exterior lighting shall spill from the site in an unnecessary manner.

(8) The height of an existing communication tower shall not be increased by an amount that would result in a violation of height restrictions for different zoning or character districts outlined in the St. Pete Beach Land Development Code.

(9) Fencing and screening of communication facilities.

a. Base stations shall be screened from adjacent public rights of way, public trails, public recreation areas, beaches, places of public gathering and adjacent properties by landscaping with native species or other means, in alignment with Division 22 of the City of St. Pete Beach Code.

b. All areas disturbed during project construction shall be replanted with vegetation compatible with vegetation in the surrounding area unless the fire marshal requires fuel modification. Native trees are the preferred vegetation.

c. Existing trees and other screening vegetation in the vicinity of the facility and along the access or utility easements, shall be preserved to the maximum extent possible and protected from damage during construction.

d. No razor wire or barbed wire shall be permitted on any chain link fencing.

(10) Lighting for wireless communication facilities shall be limited as follows:

a. All approved lighting shall be shielded or directed on site to minimize off-site light spill except for lighting required by the Federal Aviation Administration.

b. In residential zones, lighting shall be limited to Security lighting that is manually operated or motion-detector controlled.

(11) Signage shall be limited to required address and facility identification signs, emergency and safety hazard signage.

(12) All colocated and multiple-user facilities shall be designed to promote facility and site sharing where feasible, including parking areas, access roads, utilities and equipment.

(13) Facilities designed as an integral part of the structure are strongly encouraged within all utility, commercial and resort districts.

(e) *Locational Standards*. All wireless communication facilities shall be sited so as to minimize the effect on residential and rural parcels and environmental resources. To that end the following measures shall be implemented for all communication facilities, except eligible facilities requests as defined in 47 CFR § 1.6100(b)(3).

a. Wireless communication facilities shall be located to minimize their visibility and the number of distinct facilities present, as follows:

1. No new facility(ies) shall be placed on an exposed beachfront or to silhouette against the sky.

2. No new facility(ies) shall be installed in a location that is not developed with communication facilities existing as of the date of this ordinance, or other resort or commercial uses.

3. No new facility(ies) shall be placed in a location readily visible from a public trail, public park, beachfront, or other developed outdoor recreation area.

4. No new facility(ies) shall be installed closer than one-half mile from another readily visible, unconcealed or unscreened facility unless it is a co-located facility, or is on a multiple-user site.

b. Wireless communication facility(ies) shall be set back from property lines as follows:

1. The setback shall be measured from that part of the facility(ies) that is closest to the neighboring property (i.e., the setback for a faux tree would be measured from the end of the branch closest to the neighboring property). In no instance may a facility be located such that its fall or debris zone extends to an abutting property.

2. If the project parcel is adjacent to a zoning district with a more restrictive setback, the more restrictive setback shall apply to the proposed communication tower.

3. Wireless communication facilities shall not be located anywhere that results in less than a 500 foot setback from the facility(ies) to a residentially zoned parcel, regardless of the zoning of the project parcel or the contiguous parcels. This setback shall be in addition

to any required dwelling setback established in this Chapter, of which the stricter will prevail.

c. Colocation of new antennas on existing facility(ies) is strongly encouraged. Where appropriate to minimize visual impacts, new towers will not be approved where colocation on existing towers is technically feasible, will provide the desired service coverage, and would not result in alterations that create a greater visual impact.

d. The use of alternative support structures that conceal the presence of antennas are strongly encouraged, including man-made trees, light poles, signs, clock towers, bell steeples or other similar structures. If a concealment element method is proposed the applicant shall demonstrate the material will not degrade and shed plastic pollution.

e. Restricted site locations for small wireless facilities. All of the following locations will be deemed restricted site locations that require an exception pursuant to Section 131-8. of this section:

1. any location within a residential zone;

2. any location within the greater of 200 feet from a residential dwelling unit or the setback required by Section 131-8;

3. any location within 500 feet from a daycare facility or school; and

4. any location within a public trail, beachfront, park, or outdoor recreation area.

f. Location preferences for small wireless facilities. To better assist applicants and decision makers understand and respond to the community's aesthetic preferences and values, this subsection sets out listed preferences for locations to be used in connection with small wireless facilities in an ordered hierarchy. Applications that involve lesser-preferred locations may be approved so long as the applicant demonstrates by clear and convincing evidence in the written record that: (1) any more preferred locations or structures within 500 feet from the proposed site would be technically infeasible; and (2) if the proposed site or the most-preferred location within 500 feet from the proposed site is within a restricted site location, the applicant qualifies for an exception pursuant to section 131-8. of this section. The City of St. Pete Beach prefers small wireless facilities to be installed in locations, ordered from most preferred to least preferred, as follows:

1. Colocated on an already existing facility;

2. Locations within transportation/utility districts;

3. Locations within commercial zones;

4. Locations within mixed use districts;

5. Locations within institutional districts;

6. Any location not within 200 feet from any residential zone;

7. Locations within residential zones

In the event that a proposed facility would be within 500 feet from two or more restricted site locations (as defined in Subparagraph e.), and the proposed facility qualifies for an exception pursuant to section 131-8. of this code, the technically feasible location furthest from all such restricted site locations will be deemed to be the most preferred alternative. For discretionary permits the City of St. Pete Beach reserves the right to deny an application based on aesthetic or other locational considerations such as unacceptable impact on the characteristics of the impacted neighborhood or any other "safe harbor" allowed by 47 U.S.C. §§253(b)-(c) and/or 332(c)(7)(B)(i)(II) even if the applicant has proved that a denial would prohibit or effectively prohibit the provision of personal wireless service.

g. Accessory equipment. In order of preference from most preferred to least preferred, accessory equipment for wireless communication facilities and wireless communications colocation facilities shall be located underground, within a building or structure, on a screened roof top area or structure, or in a rear yard if not readily visible from surrounding properties and the roadway, unless the reviewing authority finds that another location is preferable under the circumstances of the application.

~~(e)*Lighting*. Towers shall not be artificially lighted, unless required by the FAA or other applicable authority. If lighting is required, the lighting alternatives and design chosen must cause the least disturbance to the surrounding views.~~

(f) *State or federal requirements*. All ~~towers~~ wireless facilities shall meet current standards and regulations of the FAA, the FCC, and any other agency of the state or federal government with the authority to regulate ~~towers and antennas~~ wireless facilities. If such standards and regulations are changed, then the owners of the ~~towers and antennas~~ wireless facilities governed by this chapter shall bring such ~~towers and antennas~~ wireless facilities into compliance with such revised standards and regulations within six months of the effective date of such standards and regulations, unless a different compliance schedule is mandated by the controlling state or federal agency. Failure to bring ~~towers and antennas~~ wireless facilities into compliance with such revised standards and regulations shall constitute grounds for the removal of the ~~tower or antenna~~ wireless facilities at the owner's expense.

(g) ~~*Building codes; safety standards*. To ensure the structural integrity of towers, the owner of a tower shall ensure that it is maintained in compliance with standards contained in applicable state or local building codes and the applicable standards for towers that are published by the Electronic Industries Association, as amended from time to time.~~ *Safety standards and building codes.* All wireless facilities shall be designed by qualified, licensed persons to meet minimum standards for public safety, and shall comply with all applicable legal requirements, including applicable state and local building, electric, and fire codes throughout the permit period. All wireless facilities should be proactively monitored and maintained to ensure compliance with the safety design.

(1) Fire safety hazard protocols. If the fire chief (or his or her designee), fire marshal or fire department finds good cause to believe that the facility(ies) (including, without limitation, its accessory equipment, antenna and/or base station) presents a fire risk, electrical hazard, or other immediate threat to public health and safety in violation of any applicable law, such

officials may order the facility to be shut down and powered off until such time as the fire risk or electrical hazard has been mitigated. Any mitigations required shall be at permittee's sole cost and expense.

(2) Other safety hazard protocols. If there is good cause to believe that the facility(ies) presents a danger of debris fall or shows signs of imminent structural such as misaligned base plates, degraded flanges, defective sections, joints, and guy wires, city officials may order the facility(ies) shut down and powered off until such time as the hazard has been mitigated. Any mitigations required shall be at permittee's expense.

(3) All wireless facilities shall comply with safety standards, including, but not limited to, F.S. § 633.206 and Florida Building Codes.

If, upon inspection, the City of St. Pete Beach concludes that a ~~tower~~ wireless facility fails to comply with such codes and standards and constitutes a danger to persons or property, then upon notice being provided to the owner of the tower, the owner shall have 30 days to bring such tower into compliance with such standards. Failure to bring such ~~tower~~ facility into compliance within said 30 days shall constitute grounds for the removal of the ~~tower~~ facility at the owner's expense.

(h) *Maintenance.* All wireless communications facilities including, but not limited to, telecommunication towers, poles, accessory equipment, lighting, fences, walls, shields, cabinets, artificial foliage or concealment elements and the facility site shall be maintained so as to minimize visual, noise, and other impacts on the surrounding community must and be maintained in good condition, including ensuring the facilities are reasonably free of:

a. Dirt or grease;

b. Chipped, faded, peeling, or cracked paint;

c. Rust or and corrosion;

d. Cracks, dents, or discoloration;

e. Missing, discolored, or damaged synthetic foliage or other concealment elements camouflage;

f. Graffiti, bills, stickers, or advertisements;

g. Litter or debris including but not limited to synthetic foliage that has fallen off a monopine or monopalm; permittee is responsible for prompt cleanup of debris or synthetic foliage at its expense;

h. Broken or misshapen structural parts; and

i. Damage from any cause.

(i) *Repairs.* All necessary repairs and restoration shall be completed by the permittee, owner, or operator within 48 hours:

a. After discovery of the need by the permittee, owner, operator or any designated maintenance agent; or

b. After the permittee, owner, operator, or any designated maintenance agent receives notification from a resident or the zoning administrator.

The permittee shall replace its facilities, after obtaining all required permits, if maintenance or repair is not sufficient to return the facility to the condition it was in at the time of installation.

Each owner or operator of a facility shall routinely inspect each site to ensure compliance with the standards set forth in this section and the conditions of approval.

(j) *Operational requirements.* It is of critical importance to the health, safety and welfare of the City of St. Pete Beach, its residents, and the general public that wireless communications facilities do not expose members of the general public to levels of RF radiation that exceed the limits which have been deemed safe by the FCC, and/or are imposed under CFR § 1.1310(e)(1) et seq.

a. Prohibition on illegally excessive RF radiation: No communication facility shall be sited or operated in such a manner that it poses, either by itself or in combination with other such facilities, a potential threat to public health. To that end no communication facility or combination of facilities shall produce at any time RF emissions that exceed the limits for Maximum Permissible Exposure for human exposure pursuant to 47 CFR §1.1310(e)(1), Table 1 or any more restrictive standard subsequently adopted or promulgated by the City of St. Pete Beach, the state of Florida, or the federal government.

b. Random testing. At the permittee's expense, the City of St. Pete Beach may retain an engineer or other qualified electromagnetic radiation specialist to conduct random unannounced RF radiation testing of any facility to ensure the facility's compliance with the limits in 47 C.F.R.§1.1310(e)(1) Table 1.

c. Upon the request of a resident who believes a wireless communications facility or facilities is operating in excess of FCC exposure limits or other good cause, the City of St. Pete Beach shall request information from the FCC regarding a wireless provider's compliance with RF emissions safety standards and may hire an independent consultant to test the facility for excess RF emissions levels. Such testing shall be conducted at permittee's expense. Noncompliance with FCC exposure guidelines shall be grounds for revocation of the permit or other entitlement.

(k) ~~(h)~~ For purposes of measurement, ~~tower~~ wireless communications facilities setbacks and separation distances shall be calculated and applied to facilities located in City of St. Pete Beach irrespective of municipal and county jurisdictional boundaries.

~~(l) *Not essential services.* Towers and antennas shall be regulated and permitted pursuant to this chapter and shall not be regulated or permitted as essential services, public utilities, or private utilities.~~

~~(m) *Owner's authorization.* Applicants for a permit to locate an antenna and/or a tower within the City of St. Pete Beach shall provide the city manager with a properly executed document showing the owner's authorization to use the property for which the application is sought.~~

~~(n)~~ (l) *Public notice*. For purposes of this chapter, any special exception request, variance request, or appeal of an administratively approved use or special exception shall require public notice to all abutting property owners and all property owners of properties that are located within the corresponding separation distance listed in section 131-~~7~~8(b)(5)b., Table 2, in addition to any notice otherwise required by the zoning ordinance.

~~(o)~~ (m)*Signs*. No advertising signs shall be allowed on any antenna or tower.

~~(p)~~ (o)*Buildings and support equipment*. Buildings and support equipment associated with antennas or towers shall comply with the requirements of section 131-~~8~~9.

~~(q) *Multiple antenna/tower plan*. The City of St. Pete Beach encourages the users of towers and antennas to submit a single application for approval of multiple towers and/or antenna sites. Applications for approval of multiple sites shall be given priority in the review process.~~

Sec 131-5. - Application content requirements and review.

(a) Each application for a new wireless communications facilities permit not in the public rights-of-way except eligible facilities requests shall include the following information and materials, in addition to the requirements for all of the City of St. Pete Beach applications. The absence of any item listed below shall render the application incomplete. Applications for permit approval shall include the following:

(1) *Application form*. The applicant shall submit a complete, duly executed application form. The applicant shall state the type of wireless communication facility being proposed (e.g. small cell, small wireless facility, colocation).

(2) A list of the full names and contact information for all applicants, co-applicants, facility owner(s), facility operator(s), site developer(s), and wireless carrier(s), property owner(s) and other related third parties and their agent(s), if any, on whose behalf the application is being submitted.

(3) *Proof of authorization of site occupancy*. If the applicant is not the owner of the real property where it seeks to install and operate its facility(ies) and is leasing all or a portion of the real property, the application shall provide a written copy of its lease with the owner of such property or other proof that applicant is authorized to occupy the site.

(4) *Proof of authorization of structure occupancy*. The applicant must submit a written copy of proof that the applicant is authorized to install its facility(ies) on the support structure such as a utility pole, street light, or other structure.

(5) *Inventory of existing sites*. Each applicant for an antenna and/or tower shall provide to the city manager an inventory of its existing towers, antennas, or sites approved for towers or antennas, that are either within the jurisdiction of City of St. Pete Beach or within one mile of the border thereof, including specific information about the location, height, and design of each tower. The city manager may share such information with other applicants applying for

administrative approvals or conditional use permits under this chapter or other organizations seeking to locate antennas within the jurisdiction of City of St. Pete Beach, provided, however that the city manager is not, by sharing such information, in any way representing or warranting that such sites are available or suitable.

(6) If the proposed facility is part of a system requiring multiple facilities, provide a map showing the location of all proposed facilities, a detailed site plan showing the multiple facilities, and all the materials and information listed in paragraphs (7) - (12) and (14) of this subsection of the drawn-to-scale depictions, site plans for each, visual impact analysis, etc. for each facility.

(7) *Drawn-to-scale depiction of proposed facility(ies) and equipment*. If the proposed facility is a small wireless facility, the drawn-to-scale depiction shall include complete calculations for all of the antennas and equipment of which the facility will be comprised, depicting that, when completed, the installation and equipment will meet the physical size limitations which enable the facility to qualify as a small wireless facility.

(8) *Site plan*. The applicant shall submit a site plan that shall show all existing and proposed structures and improvements, including antennas, roads, buildings, guy wires and anchors, parking, and landscaping, and shall include grading plans for new facilities and roads. Any methods used to conceal the modification of the existing facility shall be indicated on the site plan. The site plan shall be drawn to a scale of not more than one hundred feet to the inch. The site plan shall include a boundary survey for the project performed by a land surveyor licensed by the State of Florida.

(9) *Environmental impact assessment*. The applicant shall notify the City when any regulating federal or state agency has required an environmental impact assessment for the communication facility, and shall submit the results of the assessment with the first of any permits for the subject facility.

(10) *Soil erosion and sedimentation control*. A soil erosion and sedimentation control plan, prepared in accordance with the standards contained in the latest revised edition of the Environmental Quality Handbook published by the U.S. Soil Conservation Service.

(11) *Tree protection*. The applicant shall identify all existing trees to be removed on a parcel for the installation, operations and maintenance of the facility and obtain approval from the city of a tree protection plan prepared by a certified arborist if the small cell installation will be located within the canopy of a tree or within a 20-foot radius of the base of such a tree. Depending on site specific criteria (e.g., location of tree, size, and type of tree, etc.), a radius greater than 20 feet may be required. Replacement of trees shall be required subject to the regulations in Division 22 of the Land Development Code.

(12) *Visual impact analysis*.The applicant shall provide a completed visual impact analysis that shall include the following:

a. Small wireless facilities: The applicant shall provide a visual impact analysis which shall include photographic images taken from the perspectives of the properties situated in closest proximity to the location being proposed for the siting of the

facility, as well as those properties which would reasonably be expected to sustain the most significant adverse aesthetic impacts due to such factors as their close proximity to the site, their elevation relative to the site, the existence or absence of a "clear line of sight" between the small wireless facility and their location.

b. Communications towers and personal wireless service facilities which do not meet the definition of a small wireless facility: For applications seeking approval for the installation of a communications tower or a personal wireless service facility that does not meet the definition of a small wireless facility, the applicant shall provide:

1. A "zone of visibility map" to determine locations from where the new facility will be seen.

2. A visual impact analysis which shall include photographic images taken from the perspectives of the properties situated in closest proximity to the location being proposed for the siting of the facility, as well as those properties which would reasonably be expected to sustain the most significant adverse aesthetic impacts due to such factors as their close proximity to the site, their elevation relative to the site, the existence or absence of a "clear line of sight" between the tower location and their location.

The photographic images shall depict the height at which the proposed facility shall stand when completed, including all portions and proposed attachments to the facility, including, but not limited to, the main support structure, all antennas, transmitters, whip antennas, lightning rods, t-bars, crossbars, and cantilever attachments which shall, in whole or in part, be affixed to it, any and all surrounding equipment compound(s), fencing, cellular equipment cabinets, transformers, transformer vaults and/or cabinets, sector distribution boxes, backup generators, including but not limited to equipment boxes, switch boxes, backup generators, etc., to the extent that any of such compound and/ or equipment will be visible from properties other than the property upon which the proposed tower and compound are to be installed.

The photographic images shall show the maximum silhouette, viewshed analysis, color and finish palette, and proposed screening and landscaping. The analysis shall include the results of the drone/balloon test, and other information as necessary to determine visual impact of the facility. The analysis shall include a map depicting where the photos were taken. Where consistent with the natural or built environment, the analysis shall include a native vegetation landscaping plan with a visual simulation of how the chosen plants, at maturity, will screen the site.

(13) For proposed towers and facilities taller than 100 feet, the applicant shall perform a balloon test and shall publish reasonably advanced public notice of the same to enable the development review board, property owners, and the community an opportunity to assess the actual adverse aesthetic impact which the proposed facility is likely to inflict upon the nearby properties and surrounding community. Said date and time will be established by the city manager in coordination with the applicant, including an alternative date in case of

inclement weather. If a balloon is used, the diameter shall be equal to the largest antenna or dish proposed for the CRS tower or the width of the tower, whichever is larger. The applicant will be responsible for publishing a public notice of the balloon test in at least one local newspaper publication and notifying all abutting property owners and all property owners located within the corresponding separation distances listed section 131-8(b)(5)b., Table 2, via U.S. Mail at least one week prior to the test.

(14) If the application is for a facility that will not be attached to an existing utility pole and the facility's proposed height will be greater than 30 feet then structural elevations of the facility(ies) shall include any trees and other structures within 20 feet, and their height.

(15) *Alternatives analysis*. Provide an itemized list of alternative sites considered, with a comprehensive explanation of reasons alternative sites are not technologically feasible. Explanation shall include specific comparative analysis of how different sites would impact aesthetic values, and other environmental values.

(16) *Notice of application*. The applicant shall provide evidence that a city-approved notice was sent to all abutting property owners and residents, and all property owners and residents located within the corresponding separation distances listed section 131-8(b)(5)b., Table 2, of the proposed facility location within a 10-day period prior to application acceptance.

(17) *Estimated costs of removal*. A written estimate for the cost of the decommissioning and removal of the personal wireless services facility, including all equipment that comprises any portion or part of the facility, compound, and/or complex, as well as any accessory facility or structure, including the cost of the full restoration and reclamation of the site, to the extent practicable, to its condition before development in accord with the facility maintenance/decommissioning plan and removal agreement required herein in section 131-(9)(h).

(18) *Property owner consent & liability acknowledgment*. A signed written consent from each owner of the subject real property upon which the respective applicant is seeking installation of its proposed personal wireless service facility, wherein the owner or owners, both authorize the applicant to file and pursue its wireless communications facility permit application and acknowledge the potential landowner's responsibility for engineering, legal and other consulting fees incurred by the City of St. Pete Beach.

(19) *Regulatory authorization*. The applicant shall submit evidence of the applicant's regulatory status under federal and state law to provide the services and construct the wireless communications facility. Such evidence includes but is not limited to, a copy of any applicable FCC License and a current certificate of authorization by the Florida Public Commission by any carrier named as an applicant, co-applicant, or whose equipment is proposed for installation as of the time the application is being filed with the City of St. Pete Beach.

(20) The appropriate permit application fee, inclusive of any consultant review fees required by Section .

(21) *Consolidated applications*. The applicant may submit up to 30 individual applications for a small wireless facility permit in a single permit application; provided, however, that small wireless facilities in a consolidated application must be proposed with substantially the same equipment in the same configuration on the same support structure type. Each application in a consolidated application must meet all the requirements for a complete application, which includes without limitation the application fee for each application in the consolidated application. If any application therein is incomplete, the city, in the city's discretion, shall determine whether the entire consolidated application shall be deemed incomplete. If any application is withdrawn or deemed withdrawn from a consolidated application, the city shall determine whether the entire consolidated application shall be deemed withdrawn. If any application in a consolidated application fails to meet the required findings for approval, the city shall determine whether the entire consolidated application is denied.

(22) Any other studies or information as determined to be necessary by the Planning Board in order to consider an application for a wireless communication facility may be required in the event of an identified land use or zoning issue, including but not limited to, the information requested in section 131-8(b).

(b) Each application for an eligible facilities request shall include the items listed in (a)(1)-(4) and (10)-(21). The applicant shall also produce all other information that is necessary for the city manager to verify that the proposed facility meets the criteria for an eligible facilities request in 47 C.F.R. §1.6100.

(c) Each application for colocations on towers subject only to building permit review pursuant to F.S. §365.172(13)(a)1.a, shall include the items listed in (a)(1)-(8) and (10)-(21) showing that:

1. The colocation does not increase the height of the tower to which the antennae are to be attached, measured to the highest point of any part of the tower or any existing antenna attached to the tower;

2. The colocation does not increase the ground space area, commonly known as the compound, approved in the site plan for equipment enclosures and ancillary facilities; and

3. The colocation consists of antennae, equipment enclosures, and ancillary facilities that are of a design and configuration consistent with all applicable regulations, restrictions, or conditions, if any, applied to the initial antennae placed on the tower and to its accompanying equipment enclosures and ancillary facilities and, if applicable, applied to the tower supporting the antennae.

(d) Each application for colocations on existing structures besides towers subject only to building permit review pursuant to F.S. §365.172(13)(a)1.b., shall include the items listed in (a)(1)-(8) and (10)-(21) showing that:

1. The colocation does not increase the height of the existing structure to which the antennae are to be attached, measured to the highest point of any part of the structure or any existing antenna attached to the structure;

2. The colocation does not increase the ground space area, otherwise known as the compound, if any, approved in the site plan for equipment enclosures and ancillary facilities;

3. The colocation consists of antennae, equipment enclosures, and ancillary facilities that are of a design and configuration consistent with any applicable structural or aesthetic design requirements and any requirements for location on the structure, but not prohibitions or restrictions on the placement of additional colocations on the existing structure or procedural requirements, other than those authorized by F.S. §365.172, of the city's land development regulations in effect at the time of the colocation application; and

4. The colocation consists of antennae, equipment enclosures, and ancillary facilities that are of a design and configuration consistent with all applicable restrictions or conditions, if any, that do not conflict with paragraph 3. and were applied to the initial antennae placed on the structure and to its accompanying equipment enclosures and ancillary facilities and, if applicable, applied to the structure supporting the antennae.

(e) *Review and approval authority*. The City of St. Pete Beach reserves its authority to the fullest extent permitted over decisions regarding the placement, construction, and modification of a wireless communications facility pursuant to 47 U.S.C. § 332(c)(7)(A) and F.S. § 365.172(13)(b)1..

(f) *Voluntary waiver of timeframes for completeness review and the Florida shot clock to either grant or deny a properly completed application*. In the interests of promoting a proper review for approval of a permit application, the city shall request that applicant agree to a voluntary waiver of the timeframe for completeness review pursuant to F.S. § 365.172(13)(d)3.c. upon receipt of an application.

(g) *Completeness review*. Upon receipt of wireless communications facility permit application, the city shall review the application for completeness. If the city determines the application is: (a) incomplete, (b) missing required application materials, (c) specifies the wrong type of wireless facility, or (d) is otherwise defective, then, within 20 business days of the City of St. Pete Beach's receipt of the application per F.S. § 365.172(13)(d)3.a., the city shall notify applicant of the incompleteness of an application by mailing a notice of incomplete application by first class mail to the notice address which applicant has provided.

(1) *Notice of incomplete application*. Such notice shall advise the applicant, indicating with specificity any deficiencies in the required documents or deficiencies in the content of the required documents which, if cured, make the application properly completed.

(2) *Reasonable timeframe to cure application deficiencies*. Upon the mailing of such notice of incompleteness, applicant will have 30 business days from the date of mailing to cure deficiencies and make the application properly completed to accommodate the city's timely request for information required to complete the application. If applicant does not cure stated deficiencies within 30 days, the application will be considered withdrawn or closed pursuant to F.S. § 365.172(13)(d)3.a.

(3) If upon receipt of any additional materials from the applicant, the city determines that the application is still incomplete and/or defective, then the city shall, once again, mail a notice of incomplete application within 20 business days of the applicant having filed its supplemental or

corrected materials to the City and applicant shall, once again, have 30 business days to cure stated deficiencies, and the same procedure provided for hereinabove shall be repeated.

(h) *Environmental impact*. For all applications other than eligible facilities requests, the city shall request confirmation of environmental reviews pursuant to NEPA when a facility is proposed to be sited within any location specified in Sec. 131-7.(a)(9), or when directed by a federal or state regulatory agency. If, and to the extent that, the determines a proposed installation bears the potential for a significant adverse impact upon the environment within the meaning of NEPA, then the Applicant shall be expected to confirm compliance with the requirements of NEPA in determining both (a) the extent of adverse impacts upon the environment and (b) what mitigation measures the applicant should be required to undertake to minimize the adverse environmental impacts and/or adverse impacts upon historic sites, structures and/or districts, or (c) may require confirmation of compliance and any environmental reviews performed or submitted pursuant to NEPA or by the Florida Department of Environmental Protection or the Southwest Florida Water Management District

(i) *Historical reviews*. For all applications other than eligible facilities requests, the City shall consider the potential adverse impacts of any proposed personal wireless services facility upon any historic site or structure. If, and to the extent that the City determines that a proposed installation bears the potential for a significant adverse impact upon a historic site or a historic district within the meaning of the NHPA (especially if the historic site at issue is listed upon the national register of historic places), then the reviewing authority shall comply with the requirements of both NHPA and City law in determining both: (a) the extent of adverse impacts upon the historic properties, and (b) what mitigation measure might the applicant be required to undertake to minimize the adverse environmental impacts and/or adverse impacts upon historic sites or structures. Should a respective applicant fail to obtain a Section 106 review under NHPA, and opinion letters from the FCC pertaining to its proposed installation prior to a first public hearing before the reviewing authority for the respective application, then the City may make direct requests to the FCC for their review of the application. They shall request the FCC's review and input in completing the statutorily-required environmental/historic impact analysis pursuant to NHPA. This request shall include, but not be limited to, a request to the FCC for a Section 106 review, as defined in this chapter, as the City recognizes each application for a wireless communications facility permit for the installation of a personal wireless services facility shall constitute "an undertaking" for purposes of compliance with the National Historic Preservation Act.

(j) *Identified land development or zoning issue*. Pursuant to F.S. § 365.172(b)1., St. Pete Beach City's review of an application for wireless communications facility(ies) shall only address land development issues. In the event of an identified land use or zoning issue, including but not limited to, zoning district restrictions, historical sites, structural design, setbacks, aesthetics, landscaping, viewsheds, beachfront and shoreline preservation and land-use priorities, the applicant shall submit the following additional information and materials:

1. A statement whether in the event of permit denial applicant intends to claim effective prohibition and attach a written Notice of Effective Prohibition explaining how a denial would prohibit or effectively prohibit the provision of personal wireless service.

2. A written description identifying the geographic service area for the proposed facility along with a vicinity map of the geographic service area for the proposed facility, the service area of all existing sites in the local service network and showing anticipated future installations and modifications for the following two years. Each coverage map presented must be signed by a licensed engineer, attesting that they are familiar with the coverage model used, that it is an appropriate coverage model for the purpose, and that the input data used to create the coverage maps was appropriate.

3. The underlying data, certifications and other information required by 47 C.F.R. § 1.7004(c)(3)-(7).

4. A list of existing facilities within the desired service range, a detailed explanation regarding the availability of colocation opportunities for every facility on the list, and evidence of negotiation for colocation on existing facilities where such opportunities exist including but not limited to, statements of applicant's agents regarding written and verbal communications with owners and operators of existing facilities regarding such opportunities and statements of owners and operators of existing facilities regarding the availability or lack of such opportunities.

Sec. 131-~~5~~6. - Permitted uses.

(a) *General*. The uses listed in this section are deemed to be permitted uses and shall not require administrative approval or special exception approval.

(b) *Permitted uses*. The following uses are specifically permitted:

(1) Antennas or towers located on property owned, leased, or otherwise controlled by City of St. Pete Beach, provided a license or lease authorizing such antenna or tower has been approved by city commission.

Sec. 131-~~6~~7. - Administratively approved uses.

(a) *General*. The following provisions shall govern the issuance of administrative approvals for ~~towers and antennas~~ eligible facilities requests and certain colocations described in subsection (b) below.

(1) The city manager ~~may~~ shall administratively approve the uses listed in this section.

(2) Each applicant for administrative approval shall apply to the city manager providing the information set forth in sections ~~131-7(b)(1) and 131-7(b)(3)~~ 131-5.(a)(1)-(12) of this chapter and a nonrefundable fee as established by the city commission.

(3) Upon receipt of an application for administrative approval, the city manager shall notify the city commissioner of the district in which the proposed facility is located.

(4) The city manager shall review the application for administrative approval and determine if the proposed use complies with sections 131-4, 131-~~7~~8(b)(4) and 131-~~7~~8(b)(5) of this chapter.

(5) The city manager shall respond to each such application within ~~60~~ 45 business days after receiving it by either approving or denying the application unless upon request of the city manager, applicant agrees to waive the timeframes per section 131-5(f).

(6) In connection with any such administrative approval, the city manager may, in order to encourage shared use, ~~administratively~~ waive any zoning district setback requirements in section 131-~~7~~8(b)(4) or separation distances between towers in section 131-~~7~~8(b)(5) by up to 50 percent. Such waiver shall require public notice to all abutting property owners and all property owners of properties that are located within the corresponding separation distance listed in section 131-7(b)(5)b., Table 2, in addition to any notice otherwise required by the zoning ordinance.

(7) In connection with any such administrative approval, the city manager may, in order to encourage the use of monopoles, administratively allow the reconstruction of an existing tower to monopole construction.

~~(8) If an administrative approval is denied, the applicant shall file an application for a special exception pursuant to section 131-7 prior to filing any appeal that may be available under the zoning ordinance.~~

(b) *List of administratively approved uses*. The following uses ~~may~~ shall be approved by the city manager after conducting an administrative review:

~~(1) Locating antennas on existing structures or towers consistent with the terms of subsections a. and b. below.~~

~~a. *Antennas on existing non-tower structures*. Any antenna which is attached to an existing non-tower structure shall be approved by the city manager as an accessory use to any commercial, institutional, or multifamily structure of eight or more dwelling units, provided:~~

~~1. The antenna does not extend more than 30 feet above the highest point of the structure;~~

~~2. The antenna complies with all applicable FCC and FAA regulations; and~~

~~3. The antenna complies with all applicable building codes.~~

~~b. *Antennas on existing towers*. An antenna which is attached to an existing tower may be approved by the city manager and, to minimize adverse visual impacts associated with the proliferation and clustering of towers, collocation of antennas by more than one carrier on existing towers shall take precedence over the construction of new towers, provided such collocation is accomplished in a manner consistent with the following:~~

~~1. A tower which is modified or reconstructed to accommodate the collocation of an additional antenna shall be of the same tower type as the existing tower, unless the city manager allows reconstruction as a monopole.~~

~~2. Height.~~

~~(i) An existing tower may be modified or rebuilt to a taller height, not to exceed 30 feet over the tower's existing height, to accommodate the collocation of an additional antenna.~~

~~(ii) The height change referred to in subsection 2.(i) may only occur one time per communication tower.~~

~~(iii) The additional height referred to in subsection 2.(i) shall not require an additional distance separation as set forth in section 131-7. The tower's pre-modification height shall be used to calculate such distance separations and setbacks.~~

~~3. Onsite relocation.~~

~~(i) A tower which is being rebuilt to accommodate the collocation of an additional antenna may be moved onsite within 50 feet of its existing location, provided such relocation shall not have an adverse effect on neighboring uses.~~

~~(ii) After the tower is rebuilt to accommodate collocation, only one tower may remain on the site.~~

~~(iii) A relocated onsite tower shall continue to be measured from the original tower location for purposes of calculating separation distances between towers pursuant to section 131-7(b)(5). The relocation of a tower hereunder shall in no way be deemed to cause a violation of section 131-7(b)(5).~~

~~(iv) The onsite relocation of a tower which comes within the separation distances to residential units or residentially zoned lands as established in section 131-7(b)(5) shall only be permitted when approved by the development review board.~~

~~(2) New towers in non-residential zoning districts. Locating any new tower in a non-residential zoning district, provided a licensed professional engineer certifies the tower can structurally accommodate the number of shared users proposed by the applicant; the city manager concludes the tower is in conformity with the goals set forth in section 131-1 and the requirements of section 131-4; the tower meets the setback requirements in section 131-7(b) (4) and separation distances in section 131-7(b)(5); and the tower meets the following height and usage criteria:~~

~~a. For a single user, up to 120 feet in height;~~

~~b. For two users, up to 150 feet in height; and~~

~~c. For three or more users, up to 180 feet in height.~~

(1) Colocations on towers, including nonconforming towers, that meet the following requirements:

a. The colocation does not increase the height of the tower to which the antennae are to be attached, measured to the highest point of any part of the tower or any existing antenna attached to the tower;

b. The colocation does not increase the ground space area, commonly known as the compound, approved in the site plan for equipment enclosures and ancillary facilities; and

c. The colocation consists of antennae, equipment enclosures, and ancillary facilities that are of a design and configuration consistent with all applicable regulations, restrictions, or conditions, if any, applied to the initial antennae placed on the tower and to its accompanying equipment enclosures and ancillary facilities and, if applicable, applied to the tower supporting the antennae. Such regulations may include the design and aesthetic requirements, but not procedural requirements, other than those authorized by F.S. §, 365.172, of the City of St. Pete Beach's land development regulations in effect at the time the initial antennae placement was approved.

(2) Except for a historic building, structure, site, object, or district, or a tower included in paragraph (1), colocations on all other existing structures that meet the following requirements:

a. The colocation does not increase the height of the existing structure to which the antennae are to be attached, measured to the highest point of any part of the structure or any existing antenna attached to the structure, provided that this restriction shall not prohibit the installation of an antenna on a non-tower structure located no more than 30 feet above the primary structure's roofline or more than 30 feet above height limit established in the non-tower structure's zoning district, nor shall it prohibit the use of private rooftops for existing service or service expansions;

b. The colocation does not increase the ground space area, otherwise known as the compound, if any, approved in the site plan for equipment enclosures and ancillary facilities;

c. The colocation consists of antennae, equipment enclosures, and ancillary facilities that are of a design and configuration consistent with any applicable structural or aesthetic design requirements and any requirements for location on the structure, but not prohibitions or restrictions on the placement of additional colocations on the existing structure or procedural requirements, other than those authorized by F.S. § 365.172, of the City of St. Pete Beach's land development regulations in effect at the time of the colocation application; and

d. The colocation consists of antennae, equipment enclosures, and ancillary facilities that are of a design and configuration consistent with all applicable restrictions or conditions, if any, that do not conflict with subparagraph c. and were applied to the initial antennae placed on the structure and to its accompanying equipment enclosures and ancillary facilities and, if applicable, applied to the structure supporting the antennae.

(3) If only a portion of the colocation does not meet the requirements of this paragraph, such as an increase in the height of the proposed antennae over the existing structure height or a proposal to expand the ground space approved in the site plan for the equipment enclosure, where all other portions of the colocation meet the requirements of this paragraph, that portion of the colocation may be reviewed under the City of St. Pete Beach's regulations applicable to an initial placement of that portion of the facility, including, but not limited to, its land development regulations, and within the review timeframes of the Florida shot clock, and the rest of the colocation shall be reviewed in accordance with this paragraph. A colocation proposal under this paragraph that increases the ground space area, otherwise known as the compound, approved

in the original site plan for equipment enclosures and ancillary facilities by no more than a cumulative amount of 400 square feet or 50 percent of the original compound size, whichever is greater, shall be subject administrative review by the city manager for compliance with the City of St. Pete Beach's regulations, including, but not limited to, land development regulations review, and building permit review.

(4) Eligible facilities requests meeting the criteria established by 47 CFR § 1.6100(b)(3). The application does not qualify as an eligible facilities request and therefore must comply with the requirements of paragraphs (1), (2), or (3) above to qualify for administrative review under this section if any of the following is true provided that the proposed facility is not in the public rights-of-way:

a. It increases the height the greater of 10% or the height of one additional antenna array with separation from the nearest existing antenna greater than 20 feet. Changes in height should be measured from the original support structure in cases where deployments are or will be separated horizontally, such as on buildings' rooftops; in other circumstances, changes in height should be measured from the dimensions of the tower or base station, inclusive of originally approved appurtenances and any modifications that were approved prior to the passage of the Spectrum Act.

b. It adds an appurtenance to the body of the tower that would protrude from the edge of the tower more than 20 feet, or more than the width of the tower structure at the level of the appurtenance, whichever is greater; for other eligible support structures, it involves adding an appurtenance to the body of the structure that would protrude from the edge of the structure by more than 6 feet;

c. It involves installation of more than four cabinets as part of that modification.

d. It entails any excavation or deployment of transmission equipment outside of the current site by more than 30 feet in any direction. The site boundary from which the 30 feet is measured excludes any access or utility easements currently related to the site;

e. It would defeat the concealment elements of the eligible support structure; or

f. It does not comply with conditions associated with the siting approval of the construction or modification of the eligible support structure or base station equipment, provided however that this limitation does not apply to any modification that is non-compliant only in a manner that would not exceed the thresholds identified in subparagraphs a. - e..

~~(2)~~ (3) Installing a cable microcell network through the use of multiple low-powered transmitters/receivers attached to existing wireline systems, such as conventional cable or telephone wires, or similar technology that does not require the use of towers.

Sec. 131-~~7~~8. - Special exception permits.

(a) *General*. The following provisions shall govern the approval of special exceptions for towers, ~~or~~ antennas, and other wireless facilities by the city commission:

(1) If the ~~tower or antenna~~ wireless communication facility is not a permitted use under section 131-~~5~~6 of this chapter or permitted to be approved administratively pursuant to section 131-~~6~~7 of this chapter, then a special exception shall be required for the construction of a ~~tower or the placement of an antenna~~ wireless facility in all zoning districts.

(2) Applications for special exception under this section shall be reviewed by the ~~development review~~ Planning Board under the procedures and requirements of the zoning ordinance, except as modified herein. Upon completing its review at a regularly scheduled hearing, the board shall forward its recommendations to the City Commission for final determination.

(3) In considering a special exception, the ~~development review~~ Planning Board or the City Commission may impose conditions to the extent that such conditions are necessary to minimize any adverse effect of the proposed ~~tower~~ wireless facility on adjoining properties.

(4) Any information of an engineering nature that the applicant submits, whether civil, mechanical, or electrical, shall be certified by a licensed professional engineer licensed in the State of Florida.

(5) An applicant for a special exception shall submit the information described in this section and section 131-5.(a)(1) - (21), and a non-refundable fee as established by the City Commission.

(b) *Towers*.

(1) *Information required*. In addition to any information required for applications for special exception pursuant to the zoning ordinance, applicants for a special use permit for a tower shall submit the following information:

a. A scaled site plan clearly indicating the location, type and height of the proposed tower, on-site land uses and zoning, adjacent land uses and zoning (including when adjacent to other municipalities), comprehensive plan classification of the site and all properties within the applicable separation distances set forth in section 131-~~7~~8(b)(5), adjacent roadways, proposed means of access, setbacks from property lines, elevation drawings of the proposed tower and any other structures, topography, parking, and other information deemed by the city manager to be necessary to assess compliance with this chapter.

b. Legal description of the parent tract and leased parcel (if applicable).

c. The setback distance between the proposed tower and the nearest residential unit, platted residentially zoned properties, and unplatted residentially zoned properties.

d. The separation distance from other towers described in the inventory of existing sites submitted pursuant to section 131-4~~(c)~~5(a)(5) shall be shown on an updated site plan or map. The applicant shall also identify the type of construction of the existing tower(s) and the owner/operator of the existing tower(s), if known.

e. A landscape plan showing specific landscape materials.

f. Method of fencing, and finished color and, if applicable, the method of camouflage and illumination.

g. A narrative description of compliance with sections 131-4~~(c)~~, (d), (e), (f), (g), (j), (l), ~~and~~ (m), and (o), 131-~~7~~8(b) (4), 131-~~7~~8(b)(5) and all applicable federal, state or local laws.

h. A notarized statement by the applicant as to whether construction of the tower will accommodate collocation of additional antennas for future users.

i. A description of the suitability of the use of existing towers, other structures or alternative technology not requiring the use of towers or structures to provide the services to be provided through the use of the proposed new tower.

(2) *Factors considered in granting special exceptions for towers*. In addition to any standards for consideration of special exception applications pursuant to the zoning ordinance, the development review board shall consider the following factors in determining whether to recommend approval of a special exception:

a. Height of the proposed tower;

b. Proximity of the tower to residential structures and residential district boundaries;

c. Nature of uses on adjacent and nearby properties;

d. Surrounding topography;

e. Surrounding tree coverage and foliage;

f. Design of the tower, with particular reference to design characteristics that have the effect of reducing or eliminating visual obtrusiveness;

g. Proposed ingress and egress; and

h. Availability of suitable existing towers, other structures, or alternative technologies not requiring the use of towers or structures, as discussed in section 131-~~7~~8(b)(3) of this chapter.

(3) *Availability of suitable existing towers, other structures, or alternative technology*. No new tower shall be permitted unless the applicant demonstrates ~~to the reasonable satisfaction of the city that~~ no existing tower, structure or alternative technology that does not require the use of towers or structures can accommodate the applicant's proposed antenna. An applicant shall be required to submit information related to the availability of suitable existing towers, other structures or alternative technology. Evidence submitted to demonstrate that no existing tower, structure or alternative technology can accommodate the applicant's proposed antenna ~~may~~ shall consist of ~~any of~~ the following:

a. No existing towers or structures are located within the geographic area which meet applicant's engineering requirements.

b. Existing towers or structures are not of sufficient height to meet applicant's engineering requirements.

c. Existing towers or structures do not have sufficient structural strength to support applicant's proposed antenna and related equipment.

d. The applicant's proposed antenna would cause electromagnetic interference with the antenna on the existing towers or structures, or the antenna on the existing towers or structures would cause interference with the applicant's proposed antenna.

e. ~~The fees, costs, or contractual provisions required by the owner in order to share an existing tower or structure or to adapt an existing tower or structure for sharing are unreasonable. Costs exceeding new tower development are presumed to be unreasonable.~~

f. ~~The applicant demonstrates that there are other limiting factors that render existing towers and structures unsuitable.~~

(4) *Setbacks*. The following setback requirements shall apply to all towers for which a special exception is required~~; provided, however, that the development review board may recommend reduction of the standard setback requirements if the goals of this chapter would be better served thereby:~~

a. Towers shall be located in accordance with the site plan approved at the time the special exception is granted.

b. Guys and accessory buildings must satisfy the minimum zoning district setback requirements.

(5) *Separation*. The following separation requirements shall apply to all ~~towers and antennas~~ wireless communications facilities for which a special exception is required; provided, however, that the ~~development review~~ Planning Board, where so authorized in this chapter, recommend reduction of the standard separation requirements if the goals of this chapter would be better served thereby.

a. *Separation from off-site uses/designated areas*.

1. Tower separation shall be measured from the base of the tower to the lot line of the off-site uses and/or designated areas as specified in Table 1, except as otherwise provided in Table 1.

2. Separation requirements for towers shall comply with the minimum standards established in Table 1.

Table 1: Separation from adjacent uses and/or designated areas.

Adjacent Use/Designated Area	**Separation Distance**

Developed or vacant single-family or duplex residentially zoned land which is either platted or has preliminary subdivision plan approval which is not expired	200 feet or 300% height of tower whichever is greater
Existing multifamily residential units greater than duplex units	100 feet or 100% height of tower whichever is greater
Non-residentially zoned lands or non residential uses	None; only setbacks apply

b. *Separation distances between towers.*

1. Separation distances shall be required between proposed and pre-existing towers pursuant to Table 2. The separation distances shall be measured by drawings or following a straight line between the base of the existing tower and the base of the proposed tower.

Table 2: Separation distances between towers.

Tower Types	**Lattice**	**Guyed**	**Monopole 75 ft. in Height of Greater**	**Monopole Less Than 75 ft. in Height**
Lattice	5,000	5,000	1,500	750
Guyed	5,000	5,000	1,500	750
Monopole 75 Ft in Height or Greater	1,500	1,500	1,500	750
Monopole Less Than 75 feet in Height	750	750	750	750

(6) *Security fencing*. Towers shall be enclosed by security fencing not less than six feet in height and shall also be equipped with an appropriate anti-climbing device; provided however, that the development review board may recommend waiver of such requirements, as it deems appropriate.

(7) *Landscaping*. The following requirements shall govern the landscaping surrounding towers for which a special exception is required; provided, however, that the development review board may recommend waiver of such requirements if the goals of this chapter would be better served thereby.

a. Tower facilities shall be landscaped with a buffer of plant materials that effectively screens the view of the tower compound from property used for residences. The standard buffer shall consist of a landscaped strip at least four feet wide outside the perimeter of the compound.

b. In locations where the visual impact of the tower would be minimal, the landscaping requirement may be reduced or waived.

c. Existing mature tree growth and natural land forms on the site shall be preserved to the maximum extent possible. In some cases, such as towers sited on large, wooded lots, natural growth around the property perimeter may be sufficient buffer.

(8) *Variances*. The City Commission, upon recommendation from the ~~development review~~Planning Board, may allow deviations from this section to reduce the burden on the applicant of one or more of these criteria if it concludes that the goals of this chapter are better served thereby.

Sec. 131-~~8~~9. - Buildings or other equipment storage.

Accessory equipment, such as ~~E~~equipment shelters and cabinets associated with antennas shall be approved along with the approval of ~~towers and antennas~~ wireless communications facilities.

(1) Equipment shelters shall meet the applicable requirements of the building codes and shall be sited so as to meet the setback requirements of the zoning district in which they are located. Equipment shelters may, in as much as possible, be required to be designed and constructed in such a way as to harmonize with surrounding uses.

(2) Equipment cabinets shall be designed and constructed to meet all applicable safety and health codes. Further, equipment cabinets, other than those mounted on rooftops, shall not be located within the traffic visibility triangles established by the zoning ordinance and shall be appropriately screened from neighboring properties.

Sec. 131-10. Permit conditions.

(a) Owners of all approved wireless facilities shall be required to agree to allow future co-location by other carriers, and to provide an efficient process for handling co-location requests.

(b) *Post-installation certification*. Within 60 calendar days after the permittee commences full, unattended operations of the wireless facility approved or deemed-approved, the permittee shall provide the city manager with documentation reasonably acceptable to city manager that the wireless facility has been installed and constructed in strict compliance with the approved construction drawings and photo simulations. Such documentation shall include without limitation as-built drawings, GIS data, and site photographs.

(c) *Insurance required*. The permittee and each owner or operator of an antenna on the personal wireless services facility, shall obtain, and at all times relevant to this permit maintain, insurance policies, issued by an insured authorized to do business in the State of Florida and reasonably acceptable to the City of St. Pete Beach, at least as broad as follows:

(1) *Commercial general liability insurance*. The permittee shall procure and maintain at its expense or cause its contractor or subcontractor to procure and maintain throughout the term of this permit, commercial General Liability ("CGL") insurance on an "occurrence" basis, with limits not less than $2,000,000 per occurrence per wireless carrier or $4,000,000 per wireless carrier in the aggregate. If a general aggregate limit applies, either the general aggregate limit shall apply separately to this project location or the general aggregate limit shall be twice the required occurrence limit. CGL insurance must include coverage for the following: Bodily Injury and Property Damage; Personal Injury/Advertising Injury; Premises/Operations Liability; Products/Completed Operations Liability; Aggregate Limits that Apply per Project; Explosion, Collapse and Underground ("UCX") exclusion deleted; Contractual Liability with respect to the permit; Broad Form Property Damage; and Independent Consultants Coverage. The policy shall contain no endorsements or provisions limiting coverage for (i) contractual liability; (ii) cross liability exclusion for claims or suits by one insured against another; (iii) products/completed operations liability; (iv) bodily injury or damage from RF exposure at levels exceeding the FCC limits; or (v) contain any other exclusion contrary to the conditions in this permit.

(2) *Environmental pollution liability insurance*. The permittee shall procure and maintain at its expense or cause its contractor or subcontractor to procure and maintain throughout the term of this permit, Contractors Pollution Liability Insurance including contractual liability coverage to cover liability and legal expenses arising out of cleanup, removal, storage, or handling of hazardous or toxic chemicals, materials, substances, or any other pollutants by the permittee or any subcontractor resulting from pollution conditions associated with the personal wireless services facility in an amount not less than $1,000,000 each occurrence combined single limit for bodily injury and property damage.

(3) *Umbrella policy*. If an umbrella or excess liability insurance policy is used to satisfy the minimum requirements for insurance coverage listed above, the umbrella or excess liability policies shall provide coverage at least as broad as specified for the underlying coverages and covering those insured in the underlying policies. Coverage shall be "pay on behalf," with defense costs payable in addition to policy limits. Permittee shall provide a "follow form" endorsement or schedule of underlying coverage satisfactory to the City of St. Pete Beach indicating that such coverage is subject to the same terms and conditions as the underlying liability policy

(4) *Endorsements*. The relevant policy(ies) shall name the City of St. Pete Beach, its elected/appointed officials, commission members, officers, representatives, agents, volunteers and employees as additional insureds. The permittee shall use its best efforts to provide thirty (30) days' prior notice to the City of St. Pete Beach of the cancellation or material modification of any applicable insurance policy.

(5) *Verification of coverage*. Permittee shall furnish the City of St. Pete Beach with original certificates and amendatory endorsements or copies of the applicable policy language providing the insurance coverage required herein. All certificates and endorsements are to be received

and approved by the City of St. Pete Beach before any work commences. However, failure to obtain required documents prior to the work beginning shall not waive the Licensee's obligation to provide them. Permittee shall furnish updated certificates and endorsements to the City of St. Pete Beach annually. The City of St. Pete Beach reserves the right to require updated certificates and endorsements or complete, certified copies of all required insurance policies, including the endorsements required herein, at any time.

(d) *Permittee has full liability*. The permittee shall assume full liability for damage or injury caused to any property or person by the personal wireless services facility.

(e) Permittee shall provide an executed agreement, pursuant to which permittee and any related third parties agree to defend, hold harmless and fully indemnify the City of St. Pete Beach, its officers, employees, agents, attorneys, and volunteers, from (i) any claim, action or proceeding brought against the city or its officers, employees, agents, or attorneys to attack, set aside, void, or annul any such approval of the city or (ii) a successful legal action brought against the city for loss of property value or other harm caused by the placement or operation of a small cell installation. Such indemnification shall include damages, judgments, settlements, penalties, fines, defensive costs or expenses, including, but not limited to, interest, attorneys' fees and expert witness fees, or liability of any kind related to or arising from such claim, action, or proceeding whether incurred by the permittee, the City of St. Pete Beach and/or the parties initiating or bringing such proceeding. The agreement shall also include a provision obligating the permittee to indemnify the City of St. Pete Beach for all of the city's costs, fees and damages which the city incurs in enforcing the indemnification provisions of this Section.

(f) *ADA accommodations*. The City of St. Pete Beach seeks to comply with the Americans With Disabilities Act, and shall comply with same in the event that any person who is disabled within the meaning of the Act seeks a reasonable accommodation, to the extent they are entitled to same under the Act.

(g) Prior to the issuance of any entitlement permit, the applicant shall provide a facility maintenance/removal agreement and decommissioning plan to the city manager, binding the developer and successors in interest, to an agreement to:

(1) Maintain the facility as approved; and

(2) Notify the City of St. Pete Beach of intent to vacate the site, agreeing that the applicant will remove all facilities within twelve (12) months pursuant to the decommissioning plan unless the site is occupied by a successor; or

(3) Provide a cash bond equal in cost to removing the tower and associated facilities.

(h) *Decommissioning plan*. The Facility Maintenance/Removal Agreement shall include a decommissioning plan with the following information:

(1) A plan for disposal of all solid waste, special waste and hazardous waste in accordance with local, state, and federal waste disposal regulations detailing the types and quantities of waste materials and methods of disposal;

(2) A description of how and on what schedule stabilization and re-vegetation of the site as deemed necessary to minimize erosion will be accomplished. Permittee should include, to the extent possible, restoration of native vegetation, and pollinator-friendly seed mixtures shall be used to the maximum extent possible in re-vegetation of ground cover;

(3) An estimate of costs for the decommissioning of the personal wireless services facility with a detailed description of how the estimated costs were derived, including the date which was the basis for the estimate;

(4) A decommissioning plan signed by the party responsible for decommissioning and the landowner (if different) whose minimum requirements meet the standards of this Ordinance. Such plan must be filed with the city manager prior to the first operation of the personal wireless services facility;

(5) An estimate of the total cost of decommissioning value of the equipment and itemization of the estimated major expenses, including the projected costs of measures taken to minimize or prevent adverse effects on the environment during the implementation of the decommissioning plan.

(i) *Landscaping*. The permittee shall replace any landscape features damaged or displaced by the construction, installation, operation, maintenance or other work performed by the permittee or at the permittee' s direction on or about the site. If any trees are damaged or displaced, the permittee shall hire and pay for a licensed arborist to select plant and maintain replacement landscaping in an appropriate location for the species. Any replacement tree must be substantially the same size as the damaged tree or as otherwise approved by the City of St. Pete Beach. The permittee shall, at all times, be responsible to maintain any replacement landscape features.

(j) A permanent, weatherproof, facility identification sign, no more than twelve (12”) inches by twenty-four (24”) inches in size, identifying the facility operator and a twenty-four (24) hour phone number, shall be placed on the fence, the equipment building or tower base. If larger signage is required by the FCC, the applicant shall provide proof of the requirement, and signage shall not exceed the required size.

(k) *Permittee’s contact information*. Prior to the final inspection and at all times relevant to this permit, Permittee shall keep on file with the City of St. Pete Beach basic contact and site information. This information shall include, but not is limited to, the following:

(1) The name, physical address, notice address (if different), direct telephone number and email address for the permittee and, if different from the permittee, the site operator, equipment, owner, the site manager and agent for service of process;

(2) The regulatory authorizations held by the permittee and, to the extent applicable, site operator, equipment owner and site manager as may be necessary for the facility's continued operation;

(3) The facility's site identification number and/or name used by the permittee and, to the extent applicable, site operator, equipment owner and site manager; and

(4) A toll-free telephone number to the facility's network operations center where a live person with power-down control over the facility is available 24 hours-per-day, seven days-per-week. Within

10 business days after a written request by the City of St. Pete Beach, the permittee shall furnish the City with an updated form that includes all the most current information described in this condition.

(l) Within 15 days after any project approval, the permittee shall sign and file with the city manager a defense and indemnity agreement, to defend, indemnify, hold harmless, the City of St. Pete Beach and city commissioners, agents, officers, officials, employees and volunteers (collectively, the "indemnitees") from any and all i) damages, liabilities, injuries, losses, costs and expenses and from any and all claims, demands, law suits, writs and other actions or proceedings ("claims") brought against the indemnitees to challenge, attack, seek to modify, set aside, void or annul the City of St. Pete Beach' s approval of this use permit, and (ii) other claims of any kind or form, whether for personal injury, death or property damage, that arise from or in connection with the permittee's or its agents', directors', officers', employees', contractors', subcontractors', licensees' or customers' acts or omissions in connection with this use permit or the small wireless facility or other infrastructure deployment. In the event the City of St. Pete Beach becomes aware of any claims, the City will use best efforts to promptly notify the permittee and the private property owner (if applicable) and shall reasonably cooperate in the defense. The permittee expressly acknowledges and agrees that the City of St. Pete Beach shall have the right to approve, which approval shall not be unreasonably withheld, the legal counsel providing the city's defense, and the property owner and/ or permittee (as applicable) shall promptly reimburse the city for any costs and expenses directly and necessarily incurred by the city in the course of the defense. The permittee expressly acknowledges and agrees that the permittee' s indemnification obligations under this condition are a material consideration that motivates the city to approve this use permit, and that such indemnification obligations will survive the expiration, revocation or other termination of this permit in the form approved by city manager.

(m) *Permit revocation*. Any permit granted under this section may be revoked in accordance with the provisions and procedures in section 132-14.(b)(2). The city commissioners, city manager, fire marshal, or other City of St. Pete Beach official may initiate revocation proceedings when there is information that the facility may not be in compliance with all applicable laws, which includes without limitation, any permit in connection with the facility and any associated conditions with such permit(s). Before any public hearing to revoke a permit granted under this Section, the body that originally approved the permit must issue a written notice to the permittee that specifies (i) the facility(ies); ii) the violation(s) to be corrected; (iii) the timeframe in which the permittee must correct such violation(s); and (iv) that, in addition to all other rights and remedies the City of St. Pete Beach may pursue, the City of St. Pete Beach may initiate revocation proceedings for failure to correct such violation(s). The body that originally approved the permit may revoke a permit when it finds substantial evidence in the written record to show that the facility is not in compliance with any applicable laws, which includes without limitation, any permit in connection with the facility and any associated conditions with such permit(s). Any decision to revoke or not revoke a permit shall be final and not subject to any further appeals when the decision is made by the city commission; decisions made by the city manager or designee may be appealed to the city commission if the appeal is submitted within calendar 30 days of the date of the decision. Written notice of intention to revoke the permit shall be mailed to the applicant not less than 10 days before the public hearing.

(n) *Truthful and accurate statements*. The permittee acknowledges that the City of St. Pete Beach's approval relies on the written and/or oral statements by permittee and/or persons authorized to act on permittee' s behalf. In any matter before the City of St. Pete Beach in connection with the use permit or the wireless facility approved under the use permit, neither the permittee nor any person authorized to act on permittee' s behalf shall, in any written or oral statement, intentionally provide material factual information that is incorrect or misleading or intentionally omit any material information necessary to prevent any material factual statement from being incorrect or misleading.

Sec. 131-~~9~~11. - Removal of abandoned antennas and towers.

Any antenna or tower that is not operated for a continuous period of 12 months shall be considered abandoned, and the owner of such antenna or tower shall remove the same within 90 days of receipt of notice from the City of St. Pete Beach notifying the owner of such abandonment. Failure to remove an abandoned antenna or tower within said 90-day shall be grounds to remove the tower or antenna at the owner's expense. If there are two or more users of a single tower, then this provision shall not become effective until all users cease using the tower.

Sec. 131-~~10~~12. - Non-conforming uses.

(a) *Not expansion of nonconforming use*. Towers that are constructed, and antennas that are installed, in accordance with the provisions of this chapter shall not be deemed to constitute the expansion of a non-conforming use or structure.

(b) *Pre-existing towers*. Pre-existing towers shall be allowed to continue their usage as they presently exist. Routine maintenance (including replacement with a new tower of like construction and height) shall be permitted on such pre-existing towers. New construction other than routine maintenance on a pre-existing tower shall comply with the requirements of this chapter.

(c) *Rebuilding damaged or destroyed non-conforming towers or antennas*. Notwithstanding section 131-9, bona fide non-conforming towers or antennas that are damaged or destroyed may be rebuilt without having to first obtain administrative approval or a special exception and without having to meet the separation requirements specified in sections 131-~~7~~8(b)(4) and 131-~~7~~8((b)(5). The type, height, and location of the tower onsite shall be of the same type and intensity as the original facility approval. Building permits to rebuild the facility shall comply with the then applicable building codes and shall be obtained within 180 days from the date the facility is damaged or destroyed. If no permit is obtained or if said permit expires, the tower or antenna shall be deemed abandoned as specified in section 131-~~9~~10.

Sec. 131-13. - Appeals.

Any person adversely affected by a decision of the city manager in the granting or denial of permit pursuant to this chapter may appeal that decision to the City Commission. Such appeal must be taken by filing written notice with the city manager, or designee, with a copy to the city clerk, within 30 days after the decision of the city manager, or Planning Board if the appellant received actual notice within 5 days of the decision. The deadline is tolled on a day for day basis until the appellant receives actual notice or should

have become aware of the decision using reasonable diligence. Each appeal must be accompanied by a payment in sufficient amount to cover the cost of publishing and mailing notices of hearings. Failure to file such appeal constitutes acceptance of the permit and any conditions thereof or the denial of the application. Where a notice of appeal to the city manager, or designee, is not timely filed as provided in this section, such right to appeal is waived.

Section 131-14. - Review Fees and Costs.

*T*o the extent allowed by federal and state law, the Applicant shall be responsible and pay an application fee and Development review costs incurred by the city relating directly to the review, processing, and inspection of an application or facility relating to an application, proposal, or project, including, but not limited to

(a) *In-House Costs* which mean the costs to the city of the administrative and meeting time spent by city staff reviewing and processing an application, proposal, or project, and
(b) *Consultant Costs* which mean the direct expenses incurred by the city, or the reasonable value of services, as the case may be, for consultants who review the specific application, proposal, or project at the direction of the city related to the review of an application, proposal, or project.

Chapter 132 - COMMUNICATION FACILITIES IN THE ~~PUBLIC~~ CITY RIGHTS-OF-WAY

Sec. 132-1. - Purpose, intent, ~~and~~ scope, and applicability.

(a) To establish reasonable, uniform and comprehensive standards and procedures for small wireless facilities and other infrastructure deployment in the public rights-of-way, for the construction, installation, collocation, modification, operation, relocation, and removal of such facilities within the City of St. Pete Beach's territorial boundaries, consistent with and to the extent permitted under federal and Florida state law.

(b) To reserve the general authority preserved under 47 U.S.C. § 332(c)(7) and F.S. § 337.401(3)(b) to regulate and manage municipal roads and public rights-of-way in exercising its police power over matters necessary to manage the city's roads and rights-of-way.

(c) To reserve the general authority preserved under 47 U.S.C. § 332(c)(7) and F.S. § 337.401(7)(k) to enforce historic preservation zoning regulations, requirements for facility modifications under 47 U.S.C. § 1455(a), the National Historic Preservation Act, 16 USCS §§ 470 et seq., or the National Environmental Policy Act of 1969, 42 USCS §§ 4321 et seq.

(d) To employ the "General Authority" preserved to the City of St. Pete Beach pursuant to F.S. § 365.172(b)1., the Emergency Communications Act, to review any applicable land development or zoning issues, including, but not limited to aesthetics, landscaping, land-use based priorities,

structural design, and setbacks when considering applications for wireless communications facilities.

~~(e)~~ (e)~~The purpose of this chapter is to adopt specific regulations relating to the use of rights-of-way for the erection of telecommunication antennae or towers and any accessory equipment supporting the same within the city right-of-way, consistent with the Florida Statutes, as amended.~~ To promote the community interest by (1) ensuring the balance between public and private interests is maintained; (2) protecting St. Pete Beach City's visual character from potential adverse impacts and visual blight created or exacerbated by small and micro wireless facilities and related infrastructure; (3) Protecting and preserving the city's environmental resources; (4) protecting and preserving the City's public rights-of-way; and (5) promoting access to high-quality, advanced wireless services for the City's residents, businesses, and visitors.

(f) ~~It is the intent of this chapter to r~~To require all applicants ~~seeking~~ to obtain a city permit to erect any ~~telecommunication antennae or towers~~ wireless communications facilities and any accessory equipment supporting the same within the city right-of-way prior to commencing any construction and shall thereafter comply with all applicable terms therein.

(g) To adopt and to administer reasonable rules and regulations not inconsistent with state and federal law, including the United States and Florida Constitutions, Florida Statutes, the City's home-rule authority, and in accordance with the provisions of the Federal Communications Act, the Spectrum Act, FCC regulations, and other federal and state law; to establish reasonable rules and regulations necessary to manage the placement and maintenance of communications facilities in the public rights-of-way by all communications services providers after the effective date of this Ordinance; and to minimize disruption to the public rights-of-way.

(h) In furtherance of these objectives, City of St. Pete Beach shall give due consideration to the comprehensive plan, land development regulations, existing land uses, historic preservation, scenic beach and ocean viewsheds, aesthetics, community character, residential areas, and environmentally sensitive areas in approving sites for the location of towers and antennas.

(i) *Applicability.* Chapter 132 addresses, and is specific to, small wireless facilities, micro-wireless facilities, and their supporting utility poles and wireless support structures, as applicable, that are located within the City-owned rights-of-way. All other communication facilities, including small and micro wireless facilities installed on public property, shall be regulated pursuant to Chapter 131 of the Code of Ordinances.

Sec. 132-2. - Definitions.

For purposes of this chapter, the following words and phrases shall have the meanings respectively set forth below, except where the context clearly indicates a different meaning:

Abandonment means the permanent cessation of all uses of a communications facility for a period of 90 or more consecutive days; provided that this term does not include cessation of all use of a communications facility within a physical structure where the physical structure continues to be used. By way of examples, and not limitation, cessation of all use of a cable within a conduit, where the conduit, continues to be used, will not be considered abandonment while the cessation of use of a small wireless

facility collocated upon an active utility pole will be considered abandonment of the small wireless facility but not constitute abandonment of the active utility pole. Removal of all utilities, including small wireless facilities from a pole and leaving the pole, in whole or in part, will constitute abandonment of the utility pole.

Abut shall mean, when used in conjunction with a lot or parcel of land or public right-of-way, means a lot or parcel of land or public right-of-way that shares all or a part of a common lot line or boundary line with another lot or parcel of land or public right-of-way.

ACHP means the Federal Advisory Council on Historic Preservation.

Adjacent properties or properties adjacent shall mean (i) those lots or parcels of land that abut another lot or parcel of land or public right-of-way that is contiguous to a communications facility site or proposed site and (ii) the lots or parcels of land or public right-of-way that would be contiguous to lots or parcels or public rights-of-way but for an intervening local or collector roadway.

Antenna means communication equipment that transits or receives electro-magnetic radio frequency signals used in providing wireless services.

Applicable codes ~~means uniform building, fire, electrical, plumbing, or mechanical codes adopted by a recognized national code organization or local amendments to those codes enacted solely to address threats of destruction of property or injury to persons, or local codes or ordinances adopted to implement this subsection. The term includes objective design standards adopted by ordinance that may require a new utility pole that replaces an existing utility pole to be of substantially similar design, material, and color or that may require reasonable spacing requirements concerning the location of ground-mounted equipment.~~ shall mean uniform building, fire, electrical, plumbing, or mechanical codes adopted by a recognized national code organization or local amendments to those codes enacted solely to address threats of destruction of property or injury to persons, including, but not limited expressly to the Florida Building Code, National Electrical Code, National Electrical Safety Code, 2017 Edition of the Florida Department of Transportation Utility Accommodation Manual ("2017 FDOT UAM"), the Florida Department of Transportation Manual on Traffic Control and Safe Practices, the State of Florida Manual of Uniform Minimum Standards for Design Construction and Maintenance for Streets and Highways, the "Safety Rules for the Installation and Maintenance of Electrical Supply and Communication Lines" established by the Department of Commerce, Bureau of Standards of the United States, as may be amended, and City codes or ordinances, and standards and regulations, to the extent not inconsistent with the 2017 FDOT UAM and Florida law. The term includes objective design standards adopted by ordinance that may require a new utility pole that replaces an existing utility pole to be of substantially similar design, material, and color or that may require reasonable spacing requirements concerning the location of ground-mounted equipment. The term includes objective design standards adopted by ordinance that may require a small wireless facility to meet reasonable location, context, color, stealth, and concealment requirements; however, such design standards may be waived by the city upon a showing that the design standards are not reasonably compatible for the particular location of a small wireless facility or that the design standards impose an excessive expense.

Applicant, owner, or permittee ~~shall mean any person requesting a permit to place or maintain facilities in a right-of-way, or who has previously done so~~ shall mean any individual, corporation, limited liability company, general partnership, limited partnership, estate, trust, joint-stock company, association of two or more persons having a joint common interest, or any other entity submitting an application for a

wireless communication facility permit, site plan approval, building permit, and/or any other related approval, for the installation, operation and/or maintaining of one or more wireless communication facilities.

Application shall mean ~~a request submitted by an application to the City for a permit.~~ all necessary and required documentation, information, and evidence that an applicant must submit to receive a wireless communications facility permit, building permit, or other city approval for personal wireless service facilities from the city.

As-built survey means the final complete drawing(s) in hard copy signed and sealed by a professional surveyor and mapper, as defined in F.S. § 472.005, ~~as amended,~~ or licensed engineer, that reflect all changes made during the construction process, and show the exact dimensions, geometry and location of all elements of the work completed under the permit, and the as-built survey in an electronic format suitable to the city. An as-built survey is a survey performed to obtain horizontal and vertical dimensional data to facilities/improvements in/on/through right(s)-of way and/or land.

Authority shall mean the City of St. Pete Beach, Florida.

Authority utility pole shall mean a utility pole owned by the Authority in the city rights-of-way. The term does not include a utility pole owned by a municipal electric utility, a utility pole used to support municipally owned or operated electric distribution facilities, or a utility pole located in the city rights-of-way within a retirement community that is deed restricted as housing for older persons as defined in F.S. § 760.29(4)(b), as amended, has more than 5,000 residents, and has underground utilities for electric transmission or distribution.

Backhaul facilities means a physical transmission path, all or part of which is within the public rights-of-way controlled by the City or any government entity, used for the transport of communications data by wire or fiber from a wireless facility to a network. A backhaul facility may also consist of an antenna, including a microwave antenna, installed in the public rights-of-way pursuant to a permit, used for the transport of communications data wirelessly from a wireless facility to a network.

City manager means the person appointed by the city commission as the chief administrative official for the city or the designated representative thereof.

Clear zone shall mean the roadside border area, starting at the edge of the traveled way, available for safe use by errant vehicles. This area may consist of a shoulder, recoverable slope, non-recoverable slope, clear runout area, or combination thereof. The width of the clear zone is dependent upon the traffic volumes and speeds, and on the roadside geometry.

~~*Collocate, collocation or co-location* means to install, mount, maintain, modify, operate, or replace one or more wireless facilities on, under, within, or adjacent to a wireless support structure or utility pole. This term does not include the installation of a new utility pole or wireless support structure in the public right-of-way. Co-location upon an existing structure not providing telecommunication services does not convert the structure into a wireless facility~~.

"Colocation," "colocate," or "collocation," "collocate" can have different meanings depending on context.

Where and when F.S. § 337.401 applies, the definition in § 337.401(b)(7) shall also apply. That definition currently states:

“Collocate” or “collocation” means to install, mount, maintain, modify, operate, or replace one or more wireless facilities on, under, within, or adjacent to a wireless support structure or utility pole. The term does not include the installation of a new utility pole or wireless support structure in the public rights-of-way.

Where and when F.S. § 365.172 applies, the definition in § § 365.172(3)(f) shall also apply. That definition currently states:

“Colocation” means the situation when a second or subsequent wireless provider uses an existing structure to locate a second or subsequent antennae. The term includes the ground, platform, or roof installation of equipment enclosures, cabinets, or buildings, and cables, brackets, and other equipment associated with the location and operation of the antennae.

Where and when the FCC’s general rules for placement, construction and modification of personal wireless facilities apply, the definition in 47 C.F.R. § 1.6002(g) shall also apply. That definition currently states:

Collocation, consistent with § 1.1320(d) and the Nationwide Programmatic Agreement (NPA) for the Collocation of Wireless Antennas, appendix B of this part, section I.B, means—

(1) Mounting or installing an antenna facility on a pre-existing structure; and/or

(2) Modifying a structure for the purpose of mounting or installing an antenna facility on that structure.

(3) The definition of “collocation” in § 1.6100(b)(2) applies to the term as used in that section.

Where and when the FCC’s rules for wireless facility modifications apply, the definition in 47 C.F.R. § 1.6100(b)(2) shall also apply. That definition currently states:

(2) Collocation. The mounting or installation of transmission equipment on an eligible support structure for the purpose of transmitting and/or receiving radio frequency signals for communications purposes.

Communication services shall have the meaning found in F.S § 202.11, as amended, which includes the transmission, conveyance, or routing of voice, data, audio, video, or any other information or signals, including video services, to a point, or between or among points, by or through any electronic, radio, satellite, cable, optical, microwave, or other medium or method now in existence or hereafter devised, regardless of the protocol used for such transmission or conveyance. The term includes such transmission, conveyance, or routing in which computer processing applications are used to act on the form, code, or protocol of the content for purposes of transmission, conveyance or routing without regard to whether such service is referred to as voice-over-internet-protocol services or is classified by the Federal Communications Commission as enhanced or value-added. The term does not include:

(1) Information services.

(2) Installation or maintenance of wiring or equipment on a customer's premises.

(3) The sale or rental of tangible personal property.

(4) The sale of advertising, including, but not limited to, directory advertising.

(5) Bad check charges.

(6) Late payment charges.

(7) Billing and collection services.

(8) Internet access service, electronic mail service, electronic bulletin board service, or similar online computer services.

Consolidated permit application shall mean a single permit application that would otherwise require individual permit applications for the collocation of between 2 and 30 small wireless facilities to existing utility poles within the public rights-of-way.

Eleventh hour submissions means an applicant's submission of new and/or additional materials in support of an application and/or to cure deficiencies in incomplete and denied applications within 48 hours of the expiration of an applicable shot clock, or at an otherwise unreasonably short period of time before the expiration of the shot clock, making it impracticable for the city to adequately review and consider such submissions due to their complexity, volume, or other factors, before the expiration of the shot clock.

Emergency means a condition that poses a threat to life, health, or property, or may create an out-of service condition.

Emergency action means any action in the public right-of-way, including repair, replacement, or maintenance of any existing equipment of facility, which is necessary to alleviate an emergency.

Equipment or facility means any line, conduit or duct, utility pole, transmission or distribution equipment (e.g., an amplifier, power equipment, optical or electronic equipment, a transmission station, switching or routing equipment), cabinet or pedestal, handhole, manhole, vault, drain, location marker, appurtenance, or other equipment or facility associated with communications services located in the city rights-of-way.

Excavate or excavation shall mean consistent with the definition contained in F.S. § 556.102(6), as it may be amended, any manmade cut, cavity, trench, or depression in the earth's surface, formed by removal of earth, intended to change the grade or level of land, or intended to penetrate or disturb the surface of the earth, including land beneath the waters of the state, as 12 defined in F.S. § 373.019(22), and the term includes pipe bursting and directional drilling or boring from one point to another point beneath the surface of the earth, or other trenchless technologies.

Facility means the equipment and property, including, but not limited to, any and all such conduits, cables, poles, wires, supports, ducts, fiber, optics, antenna and other structures, equipment, appurtenances and pathways, including wireless facilities, small wireless facilities and micro-wireless facilities, as may be reasonably necessary to be used to provide communications services. Multiple cables, conduits, strands, or fibers located within the same conduit will be considered one communications facility for purposes of this subsection.

FCC means the Federal Communications Commission.

Historic property shall mean any prehistoric or historic district, site, building, object or other real or personal property, of historical, architectural or archaeological value. These properties or resources may include, but are not limited to, monuments, memorials, Indian habitations, ceremonial sites, abandoned settlements, engineering works, treasure troves, artifacts,or other objects with intrinsic historical or archaeological value, or any part thereof, relating to the history, government, or culture of the city.

Micro-wireless facility means a small wireless facility having dimensions no larger than 24 inches in length, 15 inches in width, and 12 inches in height and an exterior antenna, if any, no longer than 11 inches.

Monopole means a single self-supporting structure which contains no guy wires and no more than one support column.

Pass-through provider means any person who places or maintains a communications facility in the public rights-of-way and who does not remit tax pursuant to F.S. § 202.19, as amended.

Permit means the right-of-way utilization permit which must be obtained before a person may place or maintain any facility in a city right-of-way.

Permittee means any person to whom a permit to place or maintain a facility in a city right-of-way has been granted by the city.

Person means any natural person or any association, company, firm, partnership, joint venture, corporation, governmental entity, or other legal entity.

Place or maintain, placement and maintenance, or placing or maintaining shall mean to erect, construct, install, maintain, place, repair, extend, expand, remove, occupy, locate or relocate. A person that owns or exercises physical control over facilities located in the public right-of-way, such as physical control to maintain and repair, is "placing or maintaining" the facilities. A person providing service only through resale or the use of a third party's unbundled network elements is not "placing or maintaining" the facilities through which such service is provided. The transmission and receipt of radio frequency signals through the airspace of the public right-of-way does not constitute "placing or maintaining" facilities within the public rights-of-way.

Right-of-way means the surface and space above and below any real property in which the city has an interest in law or equity, open to travel by the public, including streets, easements and sidewalks, but excluding parks. Right-of-way means the public right-of-way, not private right-of-way.

Telecommunications means the transmission, between or among points specified by the user, or information of the user's choosing, without change in the form or content of the information as sent and received.

Telecommunication antenna or antenna means a mounted device used for the transmission of telecommunication services of communications services, including, but not limited to, traditional small cell technology.

Telecommunication tower or tower means a self-supporting lattice, guyed or monopole structure constructed from grade which supports telecommunications or communication service facilities. The term

tower shall not include amateur radio operators' equipment, as licensed by the Federal Communications Commission.

Small wireless facility means a wireless facility that meets the following qualifications:

(1) Each antenna associated with the facility is located inside an enclosure of no more than six cubic feet in volume or, in the case of antennas that have exposed elements, each antenna and all of its exposed elements could fit within an enclosure of no more than six cubic feet in volume; and

(2) All other wireless equipment associated with the facility is cumulatively no more than 28 cubic feet in volume. The following types of associated ancillary equipment are not included in the calculation of equipment volume: electric meters, concealment elements, telecommunications demarcation boxes, ground-based enclosures, grounding equipment, power transfer switches, cutoff switches, vertical cable runs for the connection of power and other services, and utility poles or other support structures.

Utilities means, any water, sewer, gas, drainage, monitor well, sprinkler or culvert pipe and any electric power, telecommunication, signal, communication, or cable television conduit, fiber, wire, cable, or operator thereof, including utilities operated by the city.

Utility pole shall mean a pole or similar structure that is used in whole or in part to provide communications services or for electric distribution, lighting, traffic control, signage, or a similar function. The term includes the vertical support structure for traffic lights but does not include a horizontal structure to which signal lights or other traffic control devices are attached and does not include a pole or similar structure 15 feet in height or less unless an authority grants a waiver for such pole.

Wireless facility means equipment at a fixed location which enables wireless communications between user equipment and a communications network, including radio transceivers, antennas, wires, coaxial or fiber-optic cable or other cables, regular and backup power supplies, and comparable equipment, regardless of technological configuration, and equipment associated with wireless communications. The term includes small wireless facilities. The term does not include:

(1) The structure or improvements on, under, within, or adjacent to the structure on which the equipment is collocated;

(2) Wireline backhaul facilities; or

(3) Coaxial or fiber-optic cable that is between wireless structures or utility poles or that is otherwise not immediately adjacent to or directly associated with a particular antenna.

Wireless infrastructure provider shall mean a person who has been certified to provide telecommunications service in the state and who builds or installs wireless communication transmission equipment, wireless facilities, or wireless support structures but is not a wireless services provider.

Wireless provider or provider means a wireless infrastructure or wireless service provider.

Wireless services shall mean any communications services provided using licensed or unlicensed spectrum, whether at a fixed location or mobile, using wireless facilities.

Wireless services provider shall mean a person who provides wireless services.

Wireless support structure means a freestanding structure, such as a monopole, a guyed or self supporting tower, or another existing or proposed structure designed to support or capable of supporting wireless facilities. The term does not include a utility pole.

Sec. 132-3. - Registration.

(a) *Registration required*. Any communications services provider, wireless provider, or wireless infrastructure provider that places or seeks to place facilities in the city rights-of-way shall register with the city.

(b) *Registration information*. Any communications services provider, wireless provider, or wireless infrastructure provider shall provide the following information to the city in a format acceptable to the city:

(1) The name of the provider under which it will transact business in the city;

(2) The address and telephone number of the registrant's principal place of business in the State of Florida and any branch office located in the city or, if none, the name, address, and telephone number of the applicant's national headquarters and its registered agent in Florida;

(3) The name, address, telephone number(s) and email address of the provider's primary contact person and the person to contact in case of an emergency, which telephone number(s) and/or electronic mail must be monitored 24 hours per day, seven days per week;

(4) The type of communications services that the provider intends to provide within or upon the city's rights-of-way (if more than one, state all that apply) and whether the provider remits tax pursuant to F.S. § 202.1, as amended. If no communication services are to be provided, the provider shall state whether it is a wireless infrastructure provider and/or pass-through provider (refer to section 132-8 for pass through-provider fees and charges);

(5) A copy of both the provider's Florida Annual Resale Certificate and Certificate of Registration issued by the Florida Department of Revenue to engage in the business of providing communications services in the State of Florida;

(6) A copy of the provider's certificate of authorization, public convenience and necessity or other similar certification issued by the Florida Public Service Commission, if applicable;

(7) The number of the provider's certificate of authorization or license to provide communications services issued by the Florida Public Service Commission, the department, the FCC, or other federal authority, if any;

(8) A copy of the state corporation registration proving the ability to lawfully conduct business within the State of Florida;

(9) Evidence of the provider's insurance coverage as required under this chapter;

(10) Acknowledgment of the indemnity and other provisions of this chapter; and

(11) Acknowledgment that, should the provider's contact information contained in subsection above change, the provider shall immediately provide written notice to the city of the updated contact information, no later than 24 hours after the change occurs.

(c) *The city shall review the information submitted by the provider*. If it is found that the provider complied with the requirements in subsection (b) above, the registration will be effective and the city shall notify the provider of the effectiveness of registration in writing. If the city determines that the provider is not in compliance, the city shall notify the provider in writing of the non effectiveness and denial of registration and the reasons therefore. Denial of registration does not preclude a~~n~~ provider from reapplying or filing subsequent applications for registration under the provisions of this section.

(d) *Cancellation*. A provider may cancel a registration upon written notice to the city stating that it will no longer place or maintain a facility in the city's right-of-way. A provider cannot cancel a registration if it intends to continue placing or maintaining facilities in the rights-of-way.

(e) *Transfer of registration*. If a provider transfers, sells or assigns its registration incident to the sale or transfer of the provider's communication facilities located in the public rights-of-way, the transferee, buyer or assignee shall comply with the provisions set forth in this chapter. Written notice of any such transfer, sale or assignment must be provided by the provider to the city within 30 days after the effective date of such transfer, sale or assignment. If the transferee, buyer or assignee is not currently registered with the city, then the transferee, buyer or assignee must register as provided in this section. If any applications for permits are pending under the provider's name as of the date the city receives written notice of the transfer, sale or assignment, then the city shall consider the transferee, buyer or assignee as the new applicant unless otherwise notified by the provider.

(f) *Registration amendments*. In the event of any change to the information required pursuant to this section, a provider shall advise the city in writing of such changes within 90 days of the effective date.

(g) *Registration renewal*. No later than October 1 of each year, each provider that has previously complied with the registration requirements of this chapter shall submit a registration renewal to the city on a form/format provided by the city every five years.

(h) *Involuntary termination of registration*.

(1) The city may terminate a registration if:

a. A federal or state authority suspends, denies, or revokes a registrant's certification or license required to provide communication services;

b. The registrant's placement or maintenance of a communications facility in the rights-of way presents an extraordinary danger to the general public or other users of the rights-of way and the registrant fails to remedy the danger promptly after the receipt of written notice; or

c. The registrant performs substantive and material repetitive violations of any of the provisions of this chapter.

(2) Notice of intent to terminate. Prior to termination, the registrant shall be notified by the city with a written notice setting forth all matters pertinent to the proposed termination in action, including the reasons therefore. The registrant shall have 30 days after the receipt of such notice within which to address or eliminate the reason or within which to present a plan, satisfactory to the city, to accomplish the same. If the city rejects the plan, the city shall provide written notice of such rejection within 15 days of receipt of the plan to the registrant and shall make a final determination as to termination of the registration and the terms and conditions relative thereto.

(3) Post termination action. In the event of termination, following any appeal period, the former registrant shall:

a. In accordance with the provisions of this chapter and as may otherwise be provided under state law, notify registrant's communication facilities in the rights-of-way; or

b. Provide the city with an acceptable plan for disposition of its communication facilities in the rights-of-way. If a registrant fails to comply with this subsection, the communication facilities are deemed to be abandoned and the city may exercise any remedies or rights it has at law or in equity. In any event, a terminated registrant shall take such steps as are necessary to render safe every portion of the communications facilities remaining in the rights-of-way. A registrant that has its registration terminated by the city under this section may reapply for registration one year after the termination date of the prior registration, unless otherwise permitted to reapply at the sole discretion of the city.

(4) When removal not authorized or required. In the event of termination of a registration, this section does not authorize the city to cause the removal of communication facilities used to provide another service for which the registrant or another person who owns or exercises physical control over the communications facilities holds a valid certification or license with the governing federal or state agency, if required, for the provision of such service, and is registered with the city, if required.

(i) *Effect of registration*.

(1) An effective registration does not and will not be construed to convey equitable or legal title in the rights-of-way.

(2) Providers shall comply with any and all provisions of the Code of Ordinances, including, but not limited to, any and all applicable permitting, and design requirements.

(3) Providers must have a valid registration in order to apply for and/or obtain permits.

(4) Registration does not erase or exempt a provider from having to obtain a (business/occupational) license in accordance with the Code of Ordinances.

Sec. 132-4. - Authorization to place and/or maintain communication facilities in the public rights-of-way.

Subject to the terms and conditions of this chapter, any person who complies with the provisions of this section is authorized to place and/or maintain communications facilities, including wireless facilities, or utility poles (placed for support of small wireless facilities) in the public rights-of-way, for the provision of communication services.

Sec. 132-5. - Existing communications facilities in public rights-of-way.

Providers with communication facilities in the public rights-of-way shall comply with the provisions of this section. A provider with a facility in the right-of-way as of the effective date of this section has until October 1, 2022, to comply with the provisions of this chapter, including, but not limited to, registration, or be in violation thereof.

Sec. 132-6. - Permits, generally.

(a) Prior to the installation, placement, maintenance, and/or removal of any communications facilities, or the start of any other type of construction in the public rights-of-way, a provider shall, pursuant to the requirements of existing or subsequently enacted provisions of this Code of Ordinances, obtain all permits from the city, unless preempted by state or federal law.

(b) In lieu of permit fees, the city shall impose a local communications services tax pursuant to F.S. § 202.19, as amended, to providers authorized to occupy the rights-of-way. The city may increase the total rate for the local communications services tax by an amount not to exceed a rate of 0.12 percent, pursuant to F.S. § 337.401, as amended.

(c) Any communications facilities installed or placed by a provider without first having obtained the permits required by this chapter will be removed within 30 days' written notice (electronic or standard mail) by the city to remove the same and in default of compliance with such notice, such communications facilities may be removed by the city. The provider shall be responsible for and pay the cost of the removal.

(d) In the event that work to be conducted by a provider requires streets, travel or bicycle lanes, sidewalks to be closed or obstructed or the provider deems the trimming, pruning or removal of any trees reasonably necessary to place or maintain its communication facilities and to maintain the integrity and safety of same, it shall obtain all permits from the city and comply with all other such requirements of this Code of Ordinances, state and federal laws.

Sec. 132-7. - Permit application content requirements and review.

(a) *Application requirements*. In addition to any other permitting requirements in this Code of Ordinances and section 132-15, all permit applications for wireless communications facilities must include the following information and materials:

(1) Application form duly completed and executed in a manner specified by the city that includes the content specified in section 132-15(b)(1)a..

(2) The appropriate application fee.

(3) *Proof of authorization of structure occupancy*. The applicant must submit a written copy of proof that the applicant is authorized to install its facility(ies) on the support structure such as a utility pole, street light, or other structure.

(4) *Drawn-to-scale depictions of the wireless facilities and equipment*. If the proposed facility is a small wireless facility or microwireless facility, the drawn-to-scale depiction shall include complete calculations for all of the antennas and equipment of which the facility will be comprised, depicting that, when completed, the installation and equipment will meet the physical size limitations which enable the facility to qualify as a small wireless facility or microwireless facility.

(5) Construction drawings that depict all the existing and proposed improvements, equipment and conditions related to the proposed project, which includes without limitation any and all poles, posts, pedestals, traffic signals, towers, streets, sidewalks, pedestrian ramps, driveways, curbs, gutters, drains, handholes, manholes, fire hydrants, equipment cabinets, antennas, cables, trees and other landscape features within 100 feet of the wireless support structure or utility pole. The construction drawings must: (i) contain cut sheets that contain the technical specifications for all existing and proposed antennas and accessory equipment, which includes without limitation the manufacturer, model number and physical dimensions; (ii) identify all potential support structures within 50 feet from the proposed project site and call out such structures' overall height above ground level; (iii) depict the applicant' s preliminary plan for electric and data backhaul utilities, which shall include the anticipated locations for all conduits, cables, wires, handholes, junctions, transformers, meters, disconnect switches, and points of connection; and (iv) demonstrate that proposed project will be in full compliance with all applicable health and safety laws, regulations or other rules, which includes without limitation all applicable codes and public utility regulations and orders.

(6) *Site survey*. For any small wireless facility, the applicant shall submit a survey prepared, signed and stamped by a licensed or registered engineer. The survey must identify and depict all existing boundaries, encroachments and other structures within 75 feet from the proposed project site and any new improvements, which includes without limitation all: (i) traffic lanes; (ii) all private properties and property lines; (iii) above and below-grade utilities and related structures and encroachments; (iv) fire hydrants, roadside call boxes and other public safety infrastructure; (v) streetlights, decorative poles, traffic signals and permanent signage; (vi)

sidewalks, driveways, parkways, curbs, gutters and storm drains; (vii) benches, trash cans, mailboxes, kiosks and other street furniture; and (viii) existing trees, planters and other landscaping features.

(7) *Photo simulations*. The applicant shall submit site photographs and photo simulations that show the existing location and proposed small wireless facility in context from at least three vantage points within the public streets or other publicly accessible spaces, together with a vicinity map that shows the proposed site location and the photo location for each vantage point. At least one simulation must depict the small wireless facility from a vantage point approximately 50 feet from the proposed support structure or location. When the proposed small wireless facility is located between a residential parcel of land and a waterfront parcel owned by the same person(s) or entity(ies) as the residential parcel, at least one simulation must depict the small wireless facility from the residential parcel. The photo simulations and vicinity map shall be incorporated into the construction plans submitted with the application. The photo simulations must show all required elements of the facility that will be visible and shall be based on actual site photographs.

(8) *Regulatory authorization*. The applicant shall submit evidence of the applicant's regulatory status under federal and Florida law to provide the services and construct the small wireless facility proposed in the application.

(9) *Environmental impact assessment*. The applicant shall submit a copy of their environmental assessment (EA), finding of no significant impact (FONSI) or environmental impact assessment (EIS) if the proposed facility triggered or will trigger federal NEPA environmental review when one or more of the following is or are met:

(a) The small wireless facility is installed on a new wireless support structure or utility pole located within 125% of the facility's height from the Coastal Construction Control Line;

(b) The small wireless facility is installed on a new wireless support structure or utility pole located within 125% of the facility's height from any land zoned Preservation or any preservation easement;

(c) An environmental permit is required by any state or federal regulatory authority.

(10) *Tree protection*. The applicant shall identify all existing trees to be removed on a parcel for the installation, operations and maintenance of the facility and obtain approval from the city of a tree protection plan prepared by a certified arborist if the small cell installation will be located within the canopy of a tree or within a 20-foot radius of the base of such a tree. Where a tree proposed for removal is located within a right-of-way maintained by the City, the tree shall be replaced with a tree of equivalent caliper measured at 4.5 feet above grade, height, and if a Florida-friendly or native species, shall also be a Florida-friendly native or species with preference given to one-to-one replacement of the species. Depending on site specific criteria (e.g., location of tree, size, and type of tree, etc.), a radius greater than 20 feet may be required.

(11) Structural analysis by engineer that evaluates whether the underlying pole or support structure has the structural integrity to support all the proposed equipment and attachments. At

a minimum the analysis must be consistent with ANSI .05.1 standards, the standards and practices required for an ANSI/TIA-222 Maintenance and Conditions Assessment (under the most current revision at the time of submittal), any safety and construction standards required by law and the utility provider and all other applicable codes. The report shall contain tolerances including but not limited to guy tensions if applicable, plumb, twist, slip splices and take up devices.

(12) *Acoustic analysis*. The applicant shall submit an acoustic analysis prepared and certified by a licensed engineer in the State of Florida for the proposed facility and all associated equipment including all environmental control units, sump pumps, temporary backup power generators and permanent backup power generators demonstrating compliance with the city's noise regulations. The acoustic analysis must also include an analysis of the manufacturer's specifications for all noise-emitting equipment and a depiction of the proposed equipment relative to all adjacent property lines.

(13) If the application is for a wireless facility that will not be attached to an existing utility pole and the facility's proposed height will be greater than 30 feet then structural elevations of the facility(ies) shall include any trees and other structures within 20 feet, and their height.

(14) Consolidated applications. The applicant may submit up to 30 individual applications for a small wireless facility permit in a consolidated application; provided, however, that small wireless facilities in a consolidated application must be proposed with substantially the same equipment in the same configuration on the same support structure type. Each application in a consolidated application must meet all the requirements for a complete application, which includes without limitation the application fee for each application in the consolidated application. If any application in a consolidated application is incomplete, the city, in the city's discretion, shall determine whether the entire consolidated application shall be deemed incomplete. If any application is withdrawn or deemed withdrawn from a consolidated application, the city shall determine whether the entire consolidated application shall be deemed withdrawn. If any application in a consolidated application fails to meet the required findings for approval, the city shall determine whether the entire consolidated application is denied.

(b) *Review and approval authority*. The City of St. Pete Beach reserves its authority to the fullest extent permitted over decisions regarding the placement, construction, and modification of a wireless communications facility pursuant to 47 U.S.C. § 332(c)(7)(A) and F.S. § 337.401(1)(a).

(c) *Voluntary waiver of timeframes for completeness review and the Florida shot clock to either grant or deny a properly completed application*. In the interests of promoting a proper review for approval of a permit application, the city shall request that applicant agree to a voluntary waiver of the timeframe pursuant to F.S. § 337.401(7)(d)7. for completeness review and permit review upon receipt of an application.

(d) *Completeness review*. Upon receipt of wireless communications facility permit application, the city shall review the application for completeness. If the city determines the application is: (a) incomplete, (b) missing required application materials, (c) specifies the wrong type of wireless facility, or (d) is otherwise defective, then, within 14 days of the City of St. Pete Beach's receipt of

the application per F.S. § 337.401(7)(d)7., the city shall notify applicant of the incompleteness of an application with a notice of incomplete application sent by electronic mail.

(1) Notice of incomplete application. Such notice shall advise the applicant, indicating with specificity any deficiencies in the required documents or deficiencies in the content of the required documents which, if cured, make the application properly completed.

(2) Extension of 60-day application review period. The city and applicant may mutually agree to extend the 60-day application review period provided that the city and applicant are not in negotiations regarding an alternative location for the proposed facility that is the subject of the incomplete application. At the end of the extended period, the city shall grant or deny the application.

(3) Eleventh hour submissions. Upon the electronic mailing of such notice of incompleteness, applicant will have a reasonable timeframe to cure deficiencies and make the application properly completed to accommodate the city's timely request for information required to complete the application. In the event that applicant tenders eleventh hour submissions to the city in the form of expert reports, expert materials, and/or materials which require a significant period for review due either to their complexity or the sheer volume of materials which an applicant has chosen to provide to the city at such a late point in the proceedings, the city shall be afforded a reasonable time to review such late-submitted materials.

(4) If applicant does not cure stated deficiencies within 60 days, the application will be considered withdrawn or closed.

(e) *On-site inspection*. A physical inspection by city staff or the city's designee may be required for any application that involves: (i) a new wireless facility on a new or replacement structure; (ii) any modification to an existing facility if no physical inspection has occurred in the last 12-month period; (iii) any request for a waiver of the city's objective design standards pursuant to section 132-16.

(f) *Environmental impact*. For all applications other than eligible facilities requests, the city or its designated consultant may require confirmation of compliance and any environmental reviews performed or submitted pursuant to NEPA or by the Florida Department of Environmental Protection or the Southwest Florida Water Management District when it is determined that placement of a new facility and/or its support structure could cause significant adverse impact to the environment. Installation of new wireless support structures within the locations provided in Section 131-7.(a)(9) may provide evidence as to whether an environmental review is necessary, but shall not be the only basis or solely necessitate such a review. If the review is conducted and to the extent that the city determines a proposed installation bears the potential for a significant adverse impact upon the environment within the meaning of NEPA, then the Applicant shall be expected to comply with the requirements of NEPA in determining both (a) the extent of adverse impacts upon the environment and (b) what mitigation measures the applicant should be required to undertake to minimize the adverse environmental impacts and/or adverse impacts upon historic sites, structures and/or districts.

(g) *Historical reviews*. For all applications other than eligible facilities requests, and except where preempted by F.S. 337.401.(k), the city shall consider the potential adverse impacts of any proposed personal wireless services facility upon any historic site or structure. If, and to the extent

that the city determines that a proposed installation bears the potential for a significant adverse impact upon a historic site or a historic district within the meaning of the NHPA (especially if the historic site at issue is listed upon the national register of historic places), then the reviewing applicant shall comply with the requirements of both NHPA and city law in determining both: (a) the extent of adverse impacts upon the historic properties, and (b) what mitigation measure might the applicant be required to undertake to minimize the adverse environmental impacts and/or adverse impacts upon historic sites or structures. Should a respective applicant fail to obtain a Section 106 review under NHPA, and opinion letters from the FCC pertaining to its proposed installation prior to a first public hearing before the reviewing authority for the respective application, then the Applicant shall make direct requests to the FCC for FCC or HHS review of the application. They shall request the FCC's review and input in completing the statutorily-required environmental/historic impact analysis pursuant to NHPA. This request shall include, but not be limited to, a request to the FCC for a Section 106 review, as defined in this chapter, as the city recognizes each application for a wireless communications facility permit for the installation of a personal wireless services facility shall constitute "an undertaking" for purposes of compliance with the National Historic Preservation Act.

(h) The city shall notify the applicant of approval or denial by electronic mail on or before the end of the applicable shot clock period or, if review timeframe waived, at the end of any mutually agreed-upon extension. If the application is denied, the city shall specify the basis for the denial in writing with citations to the specific code provisions on which the denial is based and send the documentation to applicant by electronic mail. The applicant may cure the deficiencies identified by the city and resubmit the application within 30 days after the notice of denial is sent to the applicant. If the application is resubmitted, the city shall approve or deny the application within 30 days of receipt of the application. A denial shall identify the specific code provisions on which the denial is based.

(i) *Truthful and accurate statements*. Applicant acknowledges that the city's approval relies on the written and/or oral statements by applicant and/or persons authorized to act on permittee's behalf. In any matter before the city in connection with the small wireless facility or other infrastructure approved under the wireless communications facility permit, neither the applicant nor any person authorized to act on applicant's behalf shall, in any written or oral statement, intentionally provide material factual information that is incorrect or misleading or intentionally omit any material information necessary to prevent any material factual statement from being incorrect or misleading.

Sec. 132-~~7~~8. - Pass-through provider fees and charges; requirements.

(a) Pass-through providers shall pay to the city, on an annual basis, an amount equal to $500.00 per linear mile, or portion thereof, of communications facilities placed and/or maintained in the public rights-of-way.

(b) The amounts charged pursuant to this section are based on the linear miles of public rights-of way where communications facilities are placed, not based on a summation of the lengths of individual cables, conduits, strands or fibers.

(c) The city shall discontinue charging pass-through provider fees at such time the provider begins remitting tax pursuant to F.S. § 202.19, as amended. Any annual amounts charged will be reduced by a prorated portion of any 12-month period during which the provider remits said tax.

(d) Annual fees are due on October 1 of each year.

(e) If the payments required by this section are not made within 90 days after the due date, the city may withhold the issuance of any permits to the registrant until the amount past due is paid in full.

(f) Pass-through providers with communications facilities placed and/or maintained in the public rights-of-way shall provide an annual notarized statement identifying the total number of linear miles of pass-through facilities in the city's rights-of-way.

(g) Upon request from the city or its agents, a pass-through provider must provide reasonable access to maps of pass-through facilities located in the rights-of-way. The scope of the request must be limited to only those maps of pass-through facilities from which the calculation of the linear miles of pass-through facilities in the rights-of-way can be determined. The request must be accompanied by an affidavit that the person making the request is authorized by the municipality or county to review tax information related to the revenue and mileage calculations for pass-through providers. A request may not be made more than once annually to a pass-through provider.

Sec. 132-~~8~~9. - Disruption, or temporary relocation of communication facilities in the right-of-way.

(a) *Disruption*. A provider shall not design, place, or maintain its communication facilities in a manner that will, in any way, disrupt, displace, damage, destroy, or interfere with any of the following:

(1) Any sewer line, storm drainage pipe, gas line, water main, pipe, conduit, wires, fiber-optics, or another providers' facilities (including any cable service provider);

(2) Any traffic signals, electronic crosswalk signals or facilities of the city's fire department or Pinellas County Sheriff's Office;

(3) Any facilities of any public entity; or

(4) Any property belonging to the city or any other person lawfully occupying the public rights-of-way, without first obtaining the consent of and being granted permission by the city.

Any provider who does not comply with the requirements above shall bear all responsibility and costs resulting from any such conduct and shall pay such costs upon demand.

(b) *Relocation*.

(1) In the event of any widening, repairs, installation, construction, or reconstruction by or for the city, of any city road within the right-of-way in which the provider has constructed any facility, the provider shall locate, move, remove, or relocate such facility as may be required for the public convenience as and whenever specified by the city and at the provider's own expense. The same duty to locate, move, remove, or relocate applies if a facility is

determined to be unreasonably interfering in any way with the convenient, safe, or continuous use of the right of-way, or with the maintenance, improvement, extension or expansion of the public road, pursuant to F.S. § 337.403, as amended. Relocation required for private developers will be reimbursed by the developer, as such is not a city project.

(2) When relocation is required under this section, city-owned and maintained facilities must be given priority in establishing new facilities alignments within the right-of-way.

(3) The term "locate" as used above in subsection (b)(1):

a. Applies only to underground facilities.

b. Requires exposure of an underground utility facility so that the location can be accurately surveyed in compliance with applicable topographic land survey standards.

c. In lieu of exposing an underground utility facility, as referenced in the above subsection b, underground detection devices may be used to accurately locate the facility as long as the same survey standards are met.

d. Requires timely performance of facility owner to supply location information within 90 days from written notice from the city.

e. Requires location data to be supplied in writing, drawings, graphic, or computer files. All data must be certified by a professional land surveyor indicating location information meets land survey standards.

(4) Nothing in this chapter prohibits facility owners from contracting with other qualified firms for performance of these activities.

(5) If a person fails to commence removal or relocation of its facilities as designated by the city, within the time specified in the city's removal order, or if a person fails to timely complete such removal, including all associated restoration of the right-of-way, the city has all rights of action specified under F.S. § 337.403, as amended, including, but not limited to, removal of the facilities at the permittee's cost and expense, by another person, city staff or its contractor; and all available remedies under the sureties, at law or equity.

(c) *Temporary raising or lowering, relocation and removal*. A provider shall temporarily raise or lower its facilities to accommodate temporary encroachments or movements in, on, over, or across the public rights-of-way, subject to the following:

(1) Upon request of any person holding a valid building or moving permit from the city granting permission for such temporary encroachment or movement, the person requesting the temporary raising or lowering of facilities shall be responsible for the following:

a. Any costs associated with the temporary raising or lowering of facilities; and

b. Contracting and coordinating with the provider, in advance of the temporary encroachment/movement, to ensure the temporary relocation of the provider's facilities is completed in a timely and cooperative manner.

(2) The city is neither subject to, nor liable for any such expense performed by the city or its contractors.

(3) In the event the city requires a provider to adapt or conform any portion of such provider's communications facilities, or in any way to alter, temporarily or permanently relocate or to change any portion of same to enable any other person to use a public rights-of-way, such provider must be reimbursed by the person desiring or prompting such change for any loss, cost or expense caused by or arising out of such change, alteration or relocation.

Sec. 132-~~9~~10. - Abandoned facilities.

(a) A provider who abandons a facility in the public right-of-way shall notify the city manager, or designee, within 90 days.

(b) The city may direct the provider by written notice to remove all or any portion of such abandoned facility, where feasible, at the provider's sole expense if the city determines that the abandoned facility interferes with the public health, safety or welfare, which includes, but is not limited to, a determination that such facility may:

(1) Compromise safety for any right-of-way user;

(2) Prevent another provider from placing or maintaining facilities; or

(3) Create a maintenance condition disruptive to the use of the right-of-way.

(c) In the event that the city manager, or designee, does not direct the removal of the abandoned facility, the provider, by its notice of abandonment, consents to the alteration, use, or removal of all or any portion of the facility by another provider or the city.

(d) If the provider fails to remove all or any portion of an abandoned facility as directed by the city manager, or designee, within a reasonable time-period, the city may perform such removal and charge all costs of the removal against the provider.

(e) The city may independently establish that a communications facility has been abandoned. In reaching such determination, the city may request documentation and/or affidavits from the provider regarding the active use of the facility. If the provider fails to provide the requested documentation within 30 days, a rebuttable presumption exists that the provider has abandoned the communications facility. If the city manager determines that a facility was abandoned, it may take any of the steps listed above.

Sec. 132-~~10~~11. - Construction and restoration.

(a) *City Projects*. For work done in advance of or as part of a city project, it is required that prior to the placement or maintenance of facilities in the right-of-way, a provider shall conduct a subsurface utility engineering (SUE) study on the proposed route of construction or expansion, all at provider's expense. A SUE study consists of, at a minimum, completion of the following tasks:

(1) Secure all available "as-built" plans, plats and other location data indicating the existence and approximate location of all underground facilities along the proposed construction route;

(2) Visibly survey and record the location and dimensions of any above-ground features of all underground facilities along the proposed construction route, including, but not limited to, manholes, value boxes, utility boxes, posts and visible street cut repairs;

(3) Plot and incorporate the data obtained from completion of the tasks described above on the provider's proposed street maps, plan sheets, and computer aided drafting and design (CADD) files, or in such other electronic format as maintained by the provider which is acceptable to the city manager, or designee;

(4) Determine and record the presence and approximate horizontal location of all underground facilities in the right-of-way along the proposed system route utilizing surface geophysical designating techniques such as electromagnetic, magnetic and elastic wave locating methods;

(5) Where system design and the location of underground facilities appear to conflict on the updated system route maps, plans and computer aided design and drafting (CADD) (or acceptable alternative) files, utilize non-destructive digging methods, such as vacuum excavation, at the critical points identified to determine as precisely as possible, the horizontal, vertical and spatial position, composition, size and other specifications of the conflicting underground facilities. A provider shall not excavate more than a 200 millimeter by 200 millimeter (eight inches by eight inches) hole in the right-of-way to complete this task;

(6) Plot, incorporate and reconcile the data obtained by completion of these tasks with the updated route maps, system plans and CADD (or acceptable alternate) files;

(7) Based on all of the data collected upon completion of these tasks, adjust the proposed system design elevations, horizontal and vertical locations to avoid the need to relocate other underground facilities;

(8) Copy to city. Upon completion of the SUE, the provider shall record all of the data collected into a CADD file, or acceptable alternate, compatible with that used by the city and deliver a copy to the city manager, or designee; and

(9) Qualified firm. All subsurface utility engineering studies conducted pursuant to this section must be performed by a firm specializing in SUE work that is approved by the city manager or may be performed by the provider's agents or employees, if qualified.

(b) *Provider Projects.*

(1) *Coordination of work*. Upon request of the city, provider may be required to coordinate placement or maintenance activities under a permit with any other work, construction, installation or repairs that may be occurring or scheduled to occur within a reasonable timeframe in the subject public rights-of-way, and provider may be required to reasonably alter its placement or maintenance schedule as necessary so as to minimize disruptions and disturbances in the public rights-of-way. Within the public rights-of-way, every provider shall make space available in its trench and/or conduit to other providers consistent with the federal

requirements of 47 U.S.C. § 224. Every provider shall utilize existing conduits, pathways and other facilities whenever possible, and shall not place or maintain any new, different, or additional poles, conduits, pathways and other facilities whenever possible, whether in the public rights-of-way or on privately-owned property, until written approval is obtained from the city or other appropriate governmental authority and, where applicable, from the private property owner.

(2) *Protection of facilities*. A provider shall not place or maintain its facilities so as to interfere with, displace, damage or destroy any facilities, including, but not limited to, sewers, gas or water mains, storm drains, pipes, cables or conduits of the city or any other person's facilities lawfully occupying the rights-of-way.

(3) *Least disruptive technology*. All construction or maintenance of facilities must be accomplished in the manner resulting in the least amount of damage and disruption of the right-of-way, subject to economic and technical feasibility.

(4) *As-built*. Upon completion of each permitted construction activity, the provider shall provide the city with ~~accurate "as-built" drawings of the facilities as installed~~ a post-installation certification, in accordance with section 132-12 of the Code of Ordinances.

(5) *Right-of-way restoration*. A provider shall, at its own cost and without delay, restore (replace/repair) the public right-of-way to its original condition, in compliance with the minimum city technical standards, after completion of placement or maintenance of its facility(ies) therein. If the provider fails to commence such restoration within 30 days following the completion of such placement and/or maintenance and complete such work within 90 days, the city may perform such restoration and charge the costs of the restoration to the provider in accordance with F.S. § 337.402, as amended. The provider shall, to the satisfaction of the city, maintain and correct any restorations made pursuant hereto, for a period of 18 months following the date of its completion. Upon written notice from the city regarding any failure to comply with this subsection, failure to remedy within 30 days of such notice will be sufficient grounds for denial of any future rights-of-way permits for the placement and/or maintenance of communications facilities.

(6) The provider is responsible for any damage resulting from placement or maintenance of its facilities. This responsibility covers not only city property, but facilities lawfully placed or maintained by other providers, and includes damage caused by service interruptions or failure of the provider's facilities to function properly.

(7) The provider shall submit a construction bond in compliance with section 132-21.

Sec. 132-~~11~~12. - ~~Provision and filing of as-built surveys~~Post-installation certification.

(a). Post-installation certification.

Within 60 days after completion of any placement of a communications facility in the public rights-of-way, the provider shall submit documentation reasonably acceptable to the city ~~the as-built survey(s)~~, at its expense, showing the final location of such facility in the public rights-of-way~~, to the city~~ and showing that the wireless facility has been installed and/or constructed in strict compliance with the approved construction drawings and photo simulations. Such documentation shall include without limitation as-built drawings, GIS data, and site photographs may be reviewed for compliance by an independent consultant retained by the city pursuant to this Ordinance. The post-installation certification shall include, without limitation, the physical site information including listing of ASR registration number, owner of record, service life, number of antennas, name of each wireless carrier using the facility, list of lengths and sizes of guy wire coil, lengths and sizes of COAX and fiber cable, COAX fiber boots, COAX fiber panels, and COAX fiber connectors, base station equipment, jaw jaw turnbuckle, grounding kit(s), lighting arrestor, lights, wave bridge, GPS receiver(s) and transmitter(s), and backup power equipment including fuel tank(s).

~~For maintenance of a communications facility which alters the configuration and/or location of such facility as depicted/described in the as-built survey on file with the city, then a new as-built survey must be filed. Such survey(s) will be filed with the city and included as part of the right-of-way permit record that was issued for the work performed. Failure of the provider to submit the required as-built survey(s) in a timely manner may cause the subject permit to be revoked and is sufficient grounds for the city to deny the issuance of any future right-of-way permits to the provider.~~

Sec. 132-~~12~~13. - Enforcement of permit obligations.

(a) *Work done without a permit*.

(1) *Emergency situations*.

a. Each provider shall immediately notify the city manager, or designee, of any event regarding its facilities which it considers to be an emergency. The provider may proceed to take whatever actions are necessary in order to respond to the emergency. The provider may be required to obtain an "after-the-fact" permit within ten business days following the emergency work or submit revised as-built drawings, where excavation is required.

b. In the event that the city becomes aware of an emergency regarding a provider's facilities, the city shall attempt to contact the local representative of each provider or person affected, or person potentially affected by the emergency. In any event, the city manager, or designee, may take whatever reasonable action it deems necessary in order to respond to the emergency, the provider whose facilities occasioned the emergency will bear the cost of such reasonable actions.

c. Except for acts of willful misconduct or gross negligence and to the extent permitted by applicable law, neither the city nor its officials, consultants, agents, or employees have any liability to the provider for any claims, damages, costs, expenses, or losses resulting from the city's breakage, removal, alteration, or relocation of any facility which arose out of or in connection with any emergency situation or, in the sole discretion of the city manager, or designee, deemed necessary to facilitate any public works project, public improvement, alteration of a city structure, change in the grade or line of any public right-of-way, or the

elevation of any public right-of-way, or was found by the city commission to be in the best interest of the health, safety or general welfare of the public.

(2) *Non-emergency situations*. Except in the case of an emergency, any person who obstructs or excavates a right-of-way or otherwise performs work in violation of this Code without a permit must subsequently obtain a permit, pay five times the normal fee for said permit (if applicable), pay five times all the other fees required by the Code of Ordinances, deposit with the city the fees necessary to correct any damage to the right-of-way, and comply with all of the requirements of this chapter.

Sec. 132-~~13~~14. - Inspections, enforcement, stop work orders, and revocation of permit.

(a) *Inspection/stop work orders*.

(1) Within one week prior to the time the work under any permit hereunder is to commence, the provider shall notify the city manager, or designee, to ensure a mutual agreement as to the work to be done.

(2) Within one week of the time the work under any site specific permit hereunder is completed, the provider shall notify the city manager, or designee.

(3) The provider shall make the work site available to the city's inspector and to all others authorized by law for inspection at all reasonable times during the execution and upon completion of the work.

(4) The city's inspector may issue an order to the provider for correction of any work that does not conform to the applicable standards, permit conditions or codes. Failure to correct the violation may result in the issuance of a red tag or be cause for revocation of the permit.

(5) ~~Work on any facility within the right-of-way that is being done contrary to the provisions of this chapter, or the terms and conditions of the permit, may be immediately stopped upon the following conditions~~: The city inspector may issue a stop work order upon a permittee committing or creating an unsafe act which may create a public hazard, failing to comply with the permit, or not complying with applicable city requirements.

a. In an emergency situation that may have a serious effect on health or safety;

b. When irreversible or irreparable harm may result, in the reasonable opinion of the city manager, or designee, and immediate cessation of the activity is necessary to protect the public and the right-of-way. The city shall provide written notice to the provider or the person performing the work, and the notice must state the conditions under which work may be resumed. Verbal notice will be sufficient in emergencies and written notice will follow. Written notice must be by hand delivery, electronic or standard mail, and may be posted at the job site, and given to the person performing the work and/or provider. Upon issuance of a stop work order, the cited work must immediately cease. The stop work order must state the reason for the order and the

conditions under which the cited work will be permitted to resume. Where an emergency exists, verbal notice by the city manager, or designee, will be sufficient to require the stoppage of work; or

f. Any person who actively continues any work after having been served with a stop work order, except such work as that person is directed by the city to remove a violation or unsafe condition, will be subject to penalties as provided in section 132-14. The city retains all available legal remedies to abate the work.

(6) The inspection or permitting by the city of work under this chapter shall not be construed as a warranty of the adequacy of performance or of the accuracy of information provided in the permit application by the provider. The provider retains full responsibility for information provided and the provider retains full responsibility for work performed at all times.

(b) *Revocation of permits*.

(1) Permittee held permits issued pursuant to the Code of Ordinances is a privilege and not a right. The holder of a permit does not possess a vested right to maintain its facilities in a particular location, nor may the rights of the provider be construed to be an interest in real property of a property right subject to constitutional protection.

(2) The city reserves the right, as provided herein, to revoke any permit, without refunding any fees, in the event of a substantial breach of the terms and conditions of any statute, ordinance, rule or regulations or any condition of the permit. A substantial breach by providers includes, but is not limited to the following:

a. The violation of any material provision of the permit;

b. Any misrepresentation or fraud made or committed in the application for a permit or registration process;

c. Failure to promptly renew the registration or the ineffectiveness of registration;

d. The failure to maintain the required sureties or insurance;

e. The failure to obey a city directive to correct, relocate or remove an installation or facility in order to address a condition identified in this chapter; and

f. Suspension or revocation of a required federal or state certification or license.

(3) Except in an emergency which could endanger health or safety, the city manager, or designee, shall issue a written notice to the provider of the breach, which must include the corrective actions to be taken by the provider and the time allowed for corrective action. In an emergency, no notice is required, and the city may take all such steps it deems necessary to safeguard the public.

(4) In addition, the city can pursue all other lawful actions, including the filing of a complaint with the public service commission, the filing in any appropriate court for an injunction seeking enforcement of the terms of this chapter or the permit or to enjoin any use of the right-of way.

~~Sec. 132-14. - General restrictions on city.~~

~~Pursuant to F.S. § 337.401(7), as amended, the city shall adhere to the requirements set forth below, regarding applications for right-of-way permits for small wireless facilities and micro-wireless facilities, subject to this chapter. Refer to additional requirements set forth in the respective sections noted below.~~

~~(1) Small wireless facilities collocation application for collocation on existing, non-city poles (refer also to section 132-17).~~

~~a. The city may not directly or indirectly require a wireless provider applicant to perform services unrelated to the collocation for which approval is sought, such as in-kind contributions to the city, including reserving fiber, conduit, or pole space for the city;~~

~~b. A wireless provider applicant may not be required to provide more information to obtain a permit than is necessary to demonstrate said applicant's compliance with applicable codes for the placement of small wireless facilities in the locations identified in the small wireless facilities collocation application;~~

~~c. The city may not require the placement of small wireless facilities on any specific utility pole or category of poles or require multiple antenna systems on a single utility pole; and~~

~~d. The city may not limit the placement of small wireless facilities by minimum separation distances; however, the city may require reasonable spacing requirements for ground mounted equipment.~~

~~(2) Small wireless facilities collocation application for new non-city utility pole to support small wireless facilities (refer also to section 132-17). The applicable requirements are set forth in subsection (1) above.~~

~~(3) Small wireless facilities collocation application for collocation on city pole (refer also to section 132-17). Refer to the requirements set forth in subsection (1) above.~~

Sec. 132-~~15~~14. - Permits required and duration.

(a) *Permits required.*

(1) Pursuant to the requirements of this chapter, any use of the public rights-of-way requires a right-of-way permit, with the exception of the activities specifically listed below:

a. Emergency actions, with the city reserving authority to require an after-the-fact permit;

b. Routine maintenance and/or repair of communications facilities and/or utility poles authorized to be located within the public rights-of-way;

c. Replacement of existing wireless facilities with wireless facilities that are substantially similar or of the same or smaller size; or

d. Installation, placement, maintenance, or replacement of micro-wireless facilities that are suspended on cable strung between existing utility poles in compliance with applicable codes by or for a provider authorized to occupy the rights-of-way and who is remitting taxes pursuant to F.S. § 202.19, as amended. An initial letter from or on behalf of the provider attesting that the dimensions of the proposed installation of micro-wireless facilities comply with the size limits pursuant to F.S. § 337.401(7)(b)9. is required.

(2) Notwithstanding this section, the city may require a right-of-way permit for work that involves excavation (regardless of time needed to perform such activity(ies) or closure of a sidewalk and/or vehicular lane(s)).

(3) Emergency action. Any person who performs work in the public rights-of-way in connection with an emergency action without a permit shall immediately notify the city of the emergency action. The person shall cease all work immediately upon completion of emergency action. The person shall also cease all work immediately upon receipt of a city stop work order determining the situation does not involve an emergency or that the emergency action is no longer warranted.

(b) *Permit duration*. Unless revoked by the city pursuant to this chapter, canceled or withdrawn by the wireless provider applicant, or otherwise nullified by a court of law with jurisdiction over such matters, a right-of-way permit issued pursuant to this chapter will remain effective for a maximum of one year. Extensions of time beyond the initial one-year period may be requested by the wireless provider applicant and granted in no more than three-month increments, at the discretion of the city manager or designee.

Sec. 132-~~16~~15. - Permit procedures.

(a) *Generally.*

(1) Pursuant to the requirements of this chapter, F.S. § 337.401, as amended, and applicable federal law, providers may place and maintain wireless facilities, small wireless facilities, and micro-wireless facilities within public rights-of-way, subject to the specific permit requirements and procedures.

(2) Notwithstanding paragraph (1), the city may prohibit or limit the placement of new or additional wireless facilities within the public rights-of-way if there is insufficient space to accommodate all of the requests to place and maintain facilities and utilities in the proposed location of the public rights-of-way, or to accommodate city approved plans for public improvements, capital improvements projects or projects the city determines are in the public interest.

(3) Wireless facilities, including but not limited to small wireless facilities and utility poles for the collocation of small wireless facilities shall not be placed in a location which violates rules and regulations set by Occupational Safety and Health Administration or the National Electrical Safety Code or the North American Electric Reliability Corporation standards. When consultant review is necessary to ensure the effective evaluation of these rules and regulations, the provider shall be responsible for any such costs as specified in Sec. 132-24.

(4) No communications facilities, including but not limited to small wireless facilities or utility poles for the collocation of small wireless facilities shall be placed or maintained in any location that is subject to or that would interfere with the city's drainage plan or that would interfere with the city's storm water management facilities, or flood plain management areas.

(5) Prior to submitting a consolidated small wireless facilities collocation application, unless otherwise determined by the city, the wireless provider applicant is invited to schedule and attend a pre-application meeting with the city, in order to determine the scope of the request, efficient processing schedule, and what documentation will be necessary to support said application.

(b) *Permit for collocation of small wireless facilities on existing non-city utility pole*. As part of any permit application to collocate a small wireless facility application on an existing, non-city utility pole, a wireless provider applicant shall include with the small wireless facility collocation (SWFC) application submittal, at a minimum, the information described below. SWFC applications that propose replacing existing, non-city poles, will be accepted and processed by the city, in accordance with subsection (c) below.

(1) Minimum application submittal requirements. No permit shall be issued unless a wireless provider applicant submits a written application to the city, in accordance with this chapter. A SWFC application for a permit shall be filed in the form and manner specified by the city, (such as in an electronic form acceptable to the city) and contain such information as may be required by the city, including, at a minimum, the information contained in this section. The city may require the wireless provider applicant to provide such additional information as the city deems necessary to complete its review of a requested permit. ~~Pursuant to F.S. § 337.401(7)(d)(2), as amended, the city shall not require a wireless provider applicant to provide more information than is necessary to demonstrate compliance with applicable codes.~~ At a minimum, the wireless provider applicant shall submit the following information in its application:

a. The name, address, electronic mail address, and phone number (cellular number if available) of the wireless provider applicant who is requesting the permit and written evidence that such wireless provider applicant has legal authority to place, maintain, or remove the equipment or facilities covered by the requested permit in the public rights of-way and will own and/or control all such equipment and facilities after completion of construction;

b. A description of the facilities/equipment, dimensions, and proposed locations of all equipment and facilities covered by the requested permit;

c. The specific location, depth, dimensions, and length of each proposed new or replacement duct, conduit, or other underground facility and the specific location, depth, dimensions, and height of any utility pole covered by the requested permit, to the extent necessary to demonstrate compliance with applicable codes;

d. A description of the manner in which the work covered by the requested permit is to be undertaken (i.e., proposed construction methods and techniques) and a proposed date for commencement of work and an estimate of the time required to complete all such work;

e. A city-approved maintenance-of-traffic plan for vehicular, bicycle, and pedestrian traffic in the area to be affected by the proposed work (including a construction schedule and completion date);

f. Proof of insurance, acknowledgment of indemnification, and construction bond(s);

g. Identification and description of any utility or other distribution or transmission system to which any equipment or facility covered by the requested permit is to be connected or attached;

h. Sufficient specificity demonstrating compliance with the Florida Building Code, most current edition, specifically including, but not limited to, terms of compliance with the high velocity zone criteria specified therein;

i. The global positioning system (GPS) coordinates of the proposed facility. The GPS coordinates must be based on the reading from a handheld mobile GPS unit set to Datum NAD 83 and WGS 84. GPS coordinates based on Google Earth or similar software application may be used where areas of shading occur due to overhead canopy. GPS coordinates must be provided in decimal degrees at a six decimal point precision;

j. Engineering drawings signed and sealed by a structural engineer, which depict:

    1. Details and specifications that demonstrate compliance with applicable codes;

    2. Public rights-of-way in the affected area of the proposed construction;

    3. A survey of locations of all existing equipment and facilities in the area of proposed construction;

    4. All equipment and facilities to be installed and/or removed;

    5. The routes of all transmission and distribution lines to be installed or removed; and

    6. The sites of all other equipment and facilities to be installed or removed in the public rights-of-way.

k. Proof of pole attachment agreement and/or letter of authorization for pole attachment from pole owner or authorized agent;

l. Payment of all uncontested money past due to the city for:

    1. Prior and current construction permits issued to applicant;

    2. Any loss, damage, or expense suffered by the city as a result of applicant's prior construction in the right-of-way or any emergency actions taken by the city; and

    3. Any use agreement, license, or franchise issued to the applicant.

m. Photographic or video documentation of the pre-construction condition of the public rights-of-way in the area by the proposed work;

n. A restoration plan and a good faith estimate of the cost of restoration of the public rights of-way. Such good faith estimate may be accepted by the city manager, or designee, unless the city determines such estimated costs are not representative of the actual costs of the restoration of the public rights-of-way. Estimates of the cost to restore the public rights-of-way shall include all costs necessary to restore the public rights-of-way to its original condition, in compliance with minimum city technical standards. Such good faith estimate may include, but are not to be limited to, costs to restore the paving, curbs/gutters, sidewalks, multi-purpose trails, and landscaping. All planted or naturally occurring shrubbery or vegetation, including sod and/or other ground cover, damaged or destroyed during work in the public rights-of-way must be replaced. Any tree pruning and/or removal approved as part of the permit must not be considered damage or impairment to be restored to the original condition, provided the provider complies with the approved mitigation plan and American National Standards Institute (ANSI) pruning standards, as applicable; and

o. Design standards. The wireless provider applicant shall provide ~~a description of and sufficient details and specifications~~ the items listed in section 132-7(a)(4) - (8) and (10) - (12) to demonstrate compliance with design standards to be utilized to minimize the visual impacts, in accordance with section 132-1~~7~~6.

(2) *Application quantity*. A wireless provider applicant seeking to collocate small wireless facilities may, at said applicant's discretion, file a consolidated SWFC application and receive a single permit for the collocation of up to 30 small wireless facilities.

(3) *Decision and notice for application submittal completeness.* Within 14 days after receiving a SWFC application, the city shall determine and notify the wireless provider applicant by electronic mail as to whether said application is complete.

a. If the SWFC application is deemed incomplete, the city shall specifically identify the missing information and request that applicant waive the Florida shot clock pursuant to section 132-7(c).

b. If the SWFC application includes a consolidated application for multiple small wireless facilities, the city may separately address small wireless facility collocations for which incomplete information has been received pursuant to the procedures outlined in section 132-7(a)(14).

~~c. A SWFC application is deemed complete if the city fails to provide notification to the wireless provider applicant within 14 days of the application filing date.~~

(4) *Decision and notice for application (permit issuance/denial).* The city shall process a ~~A~~ SWFC application ~~must be processed~~ on a nondiscriminatory basis~~, and is subject to the following:~~ in accordance with the completeness review procedures outlined in section 132-7(d) and (h).

~~a. A complete SWFC application is deemed approved if the city fails to approve or deny the application within 60 days after receipt of the application.~~

b. If the SWFC application includes a consolidated application for multiple small wireless facilities, the city ~~may separately address small wireless facility collocations which are denied~~ shall review the consolidated application in accordance with section 132-7(a)(14).

c. The city shall notify the wireless provider applicant of approval or denial by electronic mail. If the SWFC application is denied, the city shall specify in writing the basis for denial, including the specific code provisions on which the denial was based, and send the documentation to the wireless provider applicant by electronic mail. The date the electronic mail is sent will be the date of denial.

d. If the city does not use the 30-day negotiation period provided in subsection (e) below, the parties may mutually agree to extend the 60-day application review period. The city manager, or designee, shall grant or deny the SWFC application at the end of the extended period.

e. The wireless provider applicant may cure the deficiencies identified by the city and resubmit the SWFC application within 30 days after notice of the denial is sent to the wireless provider applicant. The city shall ~~approve or deny the revised SWFC application within 30 days after receipt of application or it will be deemed approved~~ provide for administrative review and shall complete its review and issue a written decision within 45 days. Any subsequent review will be limited to the deficiencies cited in the denial.

(5) *Alternative location*. Within 14 days after the date of filing the SWFC application, the city may request that either the proposed location of a small wireless facility be moved to another location in the rights-of-way and placed on an alternative city utility pole (refer to "make ready" provisions), support structure, or request the wireless provider applicant to construct a new utility pole. The city and the wireless provider applicant may negotiate the alternative location, including any objective design standards and reasonable spacing requirements for ground-based equipment, for 30 days after the date of the request. At the conclusion of the negotiation period, if the alternative location is accepted by the wireless provider applicant, the wireless provider applicant must notify the city of such acceptance and the application will be deemed granted for any new location(s) for which there is agreement. If an agreement is not reached, the wireless provider applicant must notify the city of such non-agreement and the city must grant or deny the original SWFC application within 90 days after the date said application was filed. A request for an alternative location, an acceptance of an alternative location, or a rejection of an alternative location must be in writing and provided by electronic mail.

(6) *Permit review criteria.*

a. The city shall approve a SWFC application and issue a right-of-way permit to a wireless provider applicant once said applicant has demonstrated compliance with the following nondiscriminatory, objective criteria and applicable codes:

1. The height of a small wireless facility is limited to ten feet above the existing utility pole upon which the small wireless facility is to be collocated.

2. The height for a new utility pole is limited to the tallest existing utility pole as of July 1, 2017, located in the same rights-of-way, measured from existing grade. Within 500 feet

in any direction, of the proposed location of the small wireless facility. If there is no utility pole within 500 feet, the city shall limit the height of the utility pole to 50 feet;

3. The small wireless facilities collocation application must demonstrate compliance with applicable codes, as defined in this chapter, and design standards set forth in section 132-1~~7~~6.

4. The SWFC application demonstrates compliance with the requirements set forth in sections 132-2~~2~~1, 132-2~~3~~2, and 132-24~~3~~ for insurance, indemnification, and construction bonds~~, if applicable~~.

5. *Airport airspace protections*. The small wireless facilities collocation application includes evidence of and statement that any structure to be installed pursuant to this chapter must comply with F.S. ch. 333, as amended, and federal regulations pertaining to airport airspace protections.

b. The city may deny a proposed collocation of a small wireless facility in the public rights-of way, if the proposed collocation:

1. Materially interferes with the safe operation of traffic control equipment;

2. Materially interferes with sight lines or clear zones for transportation, pedestrians, or public safety purposes, as specified in Land Development Code section 6.21;

3. Materially interferes with compliance with the Americans with Disabilities Act (ADA) or similar federal or state standards regarding pedestrian access or movement;

4. Materially fails to comply with the 2017 Florida Department of Transportation Utility Accommodation Manual, as amended; or

5. Fails to comply with criteria set forth in subsection (6), permit review criteria above, applicable codes, or design standards set forth in section 132-1~~7~~6.

(c) *Permit for new non-city utility pole to support small wireless facilities*. As part of any permit application to place a new non-city utility pole to support the collocation of a small wireless facility(ies), a wireless provider applicant shall provide a SWFC application that includes, at a minimum, the information described below. Applications that propose replacing existing non-city poles, will be accepted and processed by the city, in accordance with this section.

(1) *Minimum application submittal requirements*. No permit will be issued unless a wireless provider applicant submits application to the city, in accordance with this chapter. An application for a permit must be filed in accordance with submittal requirements set forth in subsection (6) below and include the following additional information:

a. As part of the required construction plans, the survey must also include all utility poles located in the same right(s)-of-way as the proposed pole(s), identifying the height of the existing pole(s) as measured from existing grade, within 500 feet in any direction; and

b. A SWFC application from a wireless infrastructure provider must include an attestation by an officer of the registrant that small wireless facilities will be collocated on the utility pole or structure and will be used by a wireless services provider, to provide service, within nine months after the date the application is approved.

(2) *Application quantity*. An application to collocate small wireless facilities on a new non-city pole will be limited to one new pole per application, unless otherwise determined by the city during the pre-application conference or in writing.

(3) *Decision and notice for application submittal (completeness)*. Refer to ~~subsection (b)(3)~~ section 132-7(d) above.

(4) *Decision and notice for application (permit issuance/denial)*. Refer to ~~subsection (b)(4)~~ section 132-7(h) above.

(5) *Alternative location*. Within 14 days after the date of filing the SWFC application, the city may request that the proposed location of a small wireless facility be moved to another location in the rights-of-way and placed on an alternative city utility pole (refer to "make ready" provisions set forth in subsection (d)(7) below, or support structure, or request the wireless provider applicant to place a new utility pole. The city and the wireless provider applicant may negotiate the alternative location, including any objective design standards and reasonable spacing requirements for ground-based equipment, for 30 days after the date of the request. At the conclusion of the negotiation period, if the alternative location is accepted by the wireless provider applicant, the wireless provider applicant must notify the city of such acceptance and the SWFC application will be deemed granted for any new location(s) for which there is agreement. If an agreement is not reached, the wireless provider applicant must notify the city of such non-agreement and the city must grant or deny the original SWFC application within 90 days after the date the application was filed. A request for an alternative location, an acceptance of an alternative location, or a rejection of an alternative location must be in writing and provided by electronic mail.

(6) *Permit review criteria*.

a. The city shall approve an application and issue a right-of-way permit to a wireless provider applicant once said applicant has demonstrated compliance with the following nondiscriminatory, objective criteria and applicable codes:

1. The height of a small wireless facility is limited to ten feet above the utility pole upon which the small wireless facility is to be collocated;

2. The height for a new utility pole is limited to the tallest existing utility pole as of July 1, 2017, located in the same rights-of-way, measured from existing grade. Within 500 feet in any direction, of the proposed location of the small wireless facility. If there is no utility pole within 500 feet, the city shall limit the height of the utility pole to 50 feet;

3. The application demonstrates compliance with applicable codes, as defined in this chapter, and design standards set forth in section 132-1~~7~~6;

4. The application demonstrates compliance with the requirements set forth in sections 132-~~22~~1, 132-2~~3~~2, and 132-24~~3~~ for insurance, indemnification and construction bonds; and

5. *Airport airspace protections*. The application includes evidence of and statements that any structure to be installed pursuant to this chapter complies with F.S. ch. 333, and federal regulations pertaining to airport airspace protections.

b. The city may deny a proposed collocation of a small wireless facility in the public rights-of way, if the proposed collocation:

1. Materially interferes with the safe operation of traffic control equipment;

2. Materially interferes with sight lines or clear zones for transportation, pedestrians, or public safety purposes, as specified in Land Development Code section 6.21;

3. Materially interferes with compliance with the Americans with Disabilities Act (ADA) or similar federal or state standards regarding pedestrian access or movement;

4. Materially fails to comply with the 2017 Florida Department of Transportation Utility Accommodation Manual, as amended; or

5. Fails to comply with criteria set forth in subsection (6), permit review criteria above, applicable codes, or design standards set forth in section 132-1~~7~~6.

(d) *Permit for collocation of small wireless facilities on city pole*. As part of any permit application to collocate small wireless facilities on a city pole, a wireless provider applicant shall provide a permit application that includes, at a minimum, the information described below:

(1) *Minimum application submittal requirements*. No permit will be issued unless a wireless provider applicant submits a written application to the city, in accordance with this subdivision. An application for a permit must be filed in accordance with the submittal requirements set forth in subsection (b)(1) above.

(2) *Application quantity*. An application must be limited to the quantity set forth in ~~subsection (b)(2)~~ section 132-7(a)(14) above.

(3) *Decision and notice for application submittal (completeness)*. The city shall determine and notify the wireless provider applicant by electronic mail pursuant to the time frames set forth in ~~subsection (b)(3)~~ section 132-7(d) above.

(4) *Decision and notice for application (permit issuance/denial)*. An application will be processed on a nondiscriminatory basis, subject to the following:

~~a. Complete application is deemed approved if the city fails to approve or deny the application within 60 days after receipt of the application.~~ The city shall request that applicant waive the completeness review and permit review timeframes pursuant to section 132-7(c).

b. If the application includes a consolidated application for multiple small wireless facilities, the city ~~may~~ shall review the consolidated application in accordance with section 132-7(a)(14).

c. The city shall notify the wireless provider applicant of approval or denial by electronic mail. If the application is denied, the city shall specify in writing the basis for denial, including the specific code provisions on which the denial was based, and send the documentation to said applicant by electronic mail. The date the electronic mail is sent will be the date of denial.

d. If the city does not use the 30-day negotiation period provided herein, the parties may mutually agree to extend the 60-day application review period. The city manager, or designee, shall grant or deny the application at the end of the extended period.

e. The wireless provider applicant may cure the deficiencies identified by the city and resubmit the application within 30 days after notice of the denial is sent to the wireless provider applicant. The city shall ~~approve or deny the revised application within 30 days after receipt or the application is deemed approved~~ provide for administrative review and complete its review and issue a written decision within 45 days. Any subsequent review will be limited to the deficiencies cited in the denial.

(5) *Alternative location*. Within 14 days after the date of filing the application, the city may request that the proposed location of a small wireless facility be moved to another location in the rights-of-way and placed on an alternative city utility pole (refer to "make ready" provisions set forth in subsection (7), below, support structure, or request the wireless provider applicant to place a new utility pole. The city and the wireless provider applicant may negotiate the alternative location, including any objective design standards and reasonable spacing requirements for ground-based equipment, for 30 days after the date of the request. At the conclusion of the negotiation period, if alternative location is accepted by the wireless provider applicant, said applicant must notify the city of such acceptance and the application will be deemed granted for any new location(s) for which there is agreement. If an agreement is not reached, the wireless provider applicant must notify the city of such non-agreement and the city must grant or deny the original application within 90 days after the date the application was filed. A request for an alternative location, an acceptance of an alternative location, or a rejection of an alternative location must be in writing and provided by electronic mail.

(6) Permit review criteria.

a. The city shall approve an application and issue a right-of-way permit to a wireless provider applicant once said applicant has demonstrated compliance with the following nondiscriminatory, objective criteria, applicable codes, and applicable make-ready provisions (refer to subsection 2. below);

1. The height of a small wireless facility is limited to ten feet above the existing utility pole upon which the small wireless facility is to be collocated;

2. The height for a new utility pole is limited to the tallest existing utility pole as of July 1, 2017, located in the same rights-of-way, measured from existing grade, within 500 feet in any direction, of the proposed location of the small wireless facility. If there is no utility pole within 500 feet, the city shall limit the height of the utility pole to 50 feet;

3. The application demonstrates compliance with applicable codes, as defined in this chapter, and design standards set forth in section 132-1~~7~~6.

4. The application demonstrates compliance with the requirements set forth in sections 132-2~~2~~1, 132-2~~3~~2, and 132-24~~3~~ for insurance, indemnification, and construction bonds; and

5. Airport airspace protections. The application includes evidence of and statement that any structure to be installed pursuant to this chapter complies with F.S. ch. 333, and federal regulations pertaining to airport airspace protections.

(7) *City make-ready provisions*.

a. Pursuant to F.S. § 337.401(7)(f)(5)(b), as amended, for a city-owned utility pole that supports an aerial facility used to provide communications services or electric service, the parties shall comply with the process for make-ready work under 47 U.S.C. § 224 and implementing regulations. The good faith estimate of the person owning or controlling the pole for any make-ready work necessary to enable the pole to support the requested collocation must include pole replacement, if necessary.

b. Pursuant to F.S. § 337.401(7)(f)(5)(c), as amended, for a city-owned utility pole that does not support an aerial facility used to provide communications services or electric service, the city shall provide a good faith estimate for any make-ready work necessary to enable the pole to support the requested collocation, including necessary pole replacement, within 60 days after receipt of a complete application. Make-ready work, including any pole replacement, must be completed within 60 days after written acceptance of the good faith estimate by the wireless provider applicant.

c. Make-ready alternative. Alternatively, pursuant to F.S. § 337.401(7)(f)(5)(c), as amended, the city may require the wireless provider applicant seeking to collocate small wireless facility to provide a make-ready estimate, at said applicant's expense, for the work necessary to support the small wireless facility, including pole replacement, and perform the make-ready work. If pole replacement is required, the scope of the make-ready estimate is limited to the design, fabrication, and installation of a utility pole that is substantially similar in color and composition. The city may not condition or restrict the manner in which the wireless provider applicant obtains, develops, or provides the estimate or conducts the make-ready work, subject to

usual construction restoration standards for work in the right-of-way. The replaced or altered utility pole remains the property of the city.

d. Pursuant to F.S. § 337.401(7)(f)(5)(d), as amended, the city shall not require more make-ready work than is required to meet applicable codes and/or industry standards. Fees for make-ready work will not include costs related to pre-existing damage or prior noncompliance. Fees for make-ready work, including any pole replacement, will not exceed annual costs or the amount charged to communication services providers, other than wireless services providers, and will not include any consultant fee or expense.

e. The city may reserve space on city utility poles for future public safety uses. However, a reservation of space may not preclude collocation of a small wireless facility. If replacement of the city utility pole is necessary to accommodate the collocation of the small wireless facility and the future public safety use, the pole replacement is subject to make-ready provisions and the replaced pole must accommodate the future public safety use.

(8) Collocation of small wireless facilities on city utility poles is subject to the following requirements:

a. The city shall not enter into an exclusive arrangement with any person for the right to attach equipment to city utility poles.

b. The rates and fees for collocations on city utility poles must be nondiscriminatory, regardless of the services provided by the collocating person.

(9) The city may deny a proposed collocation of a small wireless facility in the public rights-of-way, if the proposed collocation:

a. Materially interferes with the safe operation of traffic control equipment;

b. Materially interferes with sight lines or clear zones for transportation, pedestrians, or public safety purposes, as specified in Land Development Code section 6.21;

c. Materially interferes with compliance with the Americans with Disabilities Act (ADA) or similar federal or state standards regarding pedestrian access or movement;

d. Materially fails to comply with the 2017 Florida Department of Transportation Utility Accommodation Manual, as amended; or

e. Fails to comply with criteria set forth in subsection (6) above, applicable codes, or design standards set forth in section 132-1~~7~~6.

Sec. 132-~~17~~16. - Design standards.

(a) *Purpose and intent*. Above ground and underground facilities, communication facilities, utility poles, and associated facilities and equipment must be designed in such a manner to ensure such

facilities and poles are placed in locations that do not interfere with the safe operation of traffic control equipment and movement of the traveling public. These facilities and poles must be designed to maximize compatibility with the affected area (a 500-foot radius of the proposed location) and to minimize any negative visual impact on that area. Pursuant to F.S. § 337.401(7), as amended, the following design standards must apply~~, unless waived pursuant to section 132-19~~.

(b) *General placement requirements within public rights-of-way*.

(1) *Above ground facilities, communication facilities, utility poles, and associated ground mounted facilities and equipment*. Such facilities and equipment must not create any safety hazard(s) or physical or visual obstruction to vehicular, bicycle, and/or pedestrian traffic.

(2) *Communications facilities placement within public rights-of-way*. Communications facilities must be placed between the property line and the curb line of all streets and must not be within the roadway recovery area. Setbacks from property lines shall be based on site-specific aesthetic and concerns but for the purposes of structural safety there shall be a minimum setback of at least 125% of the height of the facility from any existing developed structure or structure for which a site plan or permit has been submitted and deemed complete, as measured from the closest point of the structure which is the minimum distance necessary, as determined by the city, to satisfy the structural safety or aesthetic concerns that are to be protected by the setback.

(3) Underground cables, where required, must have consistent alignment parallel with the edge of pavement, a 36-inch depth of cover for the paved portion of roadways, a 24-inch to 30-inch depth of cover in all areas except the paved portion of roadways, and must have a two-foot horizontal clearance from other underground utilities and their appurtenances.

(4) *Grounding rods and pull boxes*. The grounding rod may not extend above the top of sidewalk and must be placed in a pull box, and the ground wire between the pole and the ground rod must be inside an underground conduit. All pull boxes must be vehicle load bearing, comply with Florida Department of Transportation (FDOT) Standard Specification 635 and be listed on the FDOT Approved Products List. A concrete pad must be installed around all pull boxes not located in the sidewalk. No new or replacement pull boxes must be located in pedestrian ramps.

(5) *Signs*. No signs may be permitted on or attached to communications facilities or utility poles in public rights-of-way, unless otherwise required by federal or state law. Any existing facility or structure that lawfully supports signs may continue to support such signs, as otherwise permitted by city code or state or federal law, as amended.

(6) *Other associated ground mounted facilities and equipment*. Ground-mounted equipment for small wireless facilities must be located within a ten-foot radius of the utility pole supporting such facility and, if possible, in areas with existing foliage or other aesthetic features to obscure the view of the ground-mounted equipment. The ground-mounted equipment must use wrap or paint that is similar to the pole color. If the city has a planned future project to replace facilities or equipment in the subject public rights-of-way, the replacement facilities or equipment proposed in the application or SWFC application must conform to the city's updated design, material, and color.

(7) *Separation from driveways and hydrants*. Communications facilities and utility poles must be located at least three feet from a driveway apron and at least four feet from a fire hydrant.

(8) *New and replacement utility poles; general, city-wide placement and maintenance standards*.

a. New utility poles, where permitted, must be placed between the property line and the curb line of all streets and may not be within the roadway recovery area. The lowest wire on any of such poles, placed in any public rights-of-way open to vehicular, bicycle, and/or pedestrian traffic may not be less than 18 feet from the ground and, whenever telephone and electric power wires cross each other, wires must cross and be maintained in accordance with ~~the National Electrical Code, the National Electrical Safety Code and the "Safety Rules for the Installation and Maintenance of Electrical Supply and Communication Lines" established by the Department of Commerce, Bureau of Standards of the United States, as amended~~ applicable codes;

b. New utility poles, where permitted, must be made of the similar design, material, and color as other utility poles within the same public right-of-way (within 500 feet in any direction along that right-of-way). When poles within this radius are predominantly light poles, the new utility pole shall provide a lighting fixture of similar sheathing and shielding design, color, and height relative to other poles unless waived by the city. Where no utility poles exist within the aforementioned right-of-way, black enamel/paint-clad metal or concrete poles are required, and such poles are generally preferred throughout the city, as applicable;

c. All applications to place new poles shall include a full color photo-simulation showing the proposed new pole, facility, and/or wireless support structure installed in accordance with the application from the point of view of properties adjacent to the proposed site;

d. Newly-installed poles, towers and wireless communications facilities should be located in areas with existing foliage or other aesthetic features to the extent possible in order to obscure the view of the pole, tower or wireless communications facility.

e. Landscaping, in a manner and degree approved by the city, shall be required to mitigate the visual impact of a new wireless communications facility, its supporting structure and all equipment associated therewith. The registrant and permittee shall be responsible for maintaining and replacing or expanding if needed as determined by the city, landscaping shielding views of the wireless communications facility, its supporting structure and equipment.

f. New poles, where permitted, must adhere to the protection and pruning standards, as set forth in Land Development Code section 22.10, located in the public rights-of-way and/or on private property. A provider shall not prune, remove, or irreversibly damage any protected tree, as defined in Land Development Code sections 22.11 through 22.14, unless such activity is authorized by a permit issued by the city;

g. Replacement utility poles must be of similar design, material, and color of the existing pole being replaced; however, black enamel/paint-clad metal or concrete poles, are preferred. The replacement pole must be located in approximately the same location as the existing pole. When the predominant or ancillary purpose of the replaced pole is to provide street or

pedestrian lighting, the replacement utility pole shall provide a lighting fixture of similar sheathing and shielding design, color, and height relative to other poles unless waived by the city. The replacement pole must continue to serve its primary function. If the city has a planned future project to replace utility poles in the subject public rights-of-way, the replacement poles proposed in the application or small wireless facilities collocation application must conform to the city's updated design, material, and color;

h. At-grade facilities, aerial wireline facilities and utility poles in the right-of-way shall comply with undergrounding requirements of the city that prohibit above ground structures in the right-of-way, as applicable; and

i. Guidance for location. The city strongly encourages:

1. Utility poles should be placed equal distance between existing utility poles, if any, within the right-of-way;

2. ~~For placement within residential-zoned districts. At grade facilities and utility poles should be placed either at the common property line of the parcels that abut the right-of-way or another location that demonstrates the least impact to access such parcels. At grade facilities and utility poles should be placed such that the view from principal structures within the residential districts are not significantly impaired; and~~ With respect to location, ground-mounted small wireless facilities up to 28 cu. ft. in dimension shall be located within a ten (10) foot radius of the existing structure or utility pole for the collocated small wireless facility. Registrants are encouraged to locate ground-mounted small wireless facilities with reasonable spacing of at least three hundred (300) feet from other ground-mounted small wireless facilities in the public rights-of-way. Such ground-mounted small wireless facilities shall be installed in a location that is substantially similar to the location used for the installation of other ground-mounted equipment in the public rights-of-way. By way of example, if a ground-mounted equipment cabinet associated with a utility pole is installed in the bulb-out within the public rights-of-way, a ground-mounted small wireless facility shall be installed in a bulb-out and shall be concealed with substantially similar landscaping in accordance with the city code and maintained by the registrant at its cost and expense for as long at the facility remains in the public rights-of-way.

3. Non-residentially zoned districts. At grade and utility poles should be placed either at the common property line of the parcels that abut the right-of-way or another location that demonstrates the least impact to access such parcels.

(c) No placement in residential districts. The city strongly discourages placement in residential districts. When a small wireless facility is proposed to be installed within a residential district within the extent described in Section 7.2. of the Land Development Code, the City shall as part of its Section 132-7 timeframe extension request ask the provider to relocate the facility to a nonresidential district. *General stealth design requirements within public rights-of-way, city-wide*.

(1) The small wireless facility, electric meters and disconnect switches may be mounted on the exterior of the pole and must be concealed with use of shrouds that are similar to the pole color and texture;

(2) No exposed wires, cables, conduits, etc., attached to poles; preferred if such are placed internal to pole, but if not possible then such attachments must be concealed with use of shrouds that are similar to the pole color and texture;

(3) Other components, such as back-haul, where housed above-ground, must be placed within a cabinet box, or other such container that are concealed with durable materials or paint that are similar to the pole color or includes other imagery in context with the location of equipment (i.e., imagery of vegetation, architectural/geometrical patterns, or equivalent); and

(4) Unless otherwise provided by state or federal laws or regulations, a small wireless facility is prohibited from having any type of light, lighted signal, or illumination.

(d) The City shall be eligible to waive objective design standards subject to the considerations of F.S. 337.401.(r).

~~Sec. 132-18. - Waiver of objective design standards for small wireless facilities.~~

~~(a) Objective design standards provided in section 132-17 may be waived by the city manager, or designee, upon the wireless services provider demonstrating to the city, that the objective design standards are not reasonably compatible for the particular location of a small wireless facility or that the objective design standards impose an excessive expense. The objective design standards may also be waived to comply with 47 U.S.C. § 332 pertaining to gap in coverage.~~

~~(b) A request for a waiver must be filed contemporaneously with the SWFC application. The request for waiver must contain each section or subsection for which a waiver is being sought. A request for a waiver must include a detailed explanation, which supporting engineering or other data, as to why a waiver from the requirements of this chapter is required. For waivers based on 47 U.S.C. § 332, the request for waiver must demonstrate that denial of the SWFC application will result in a significant gap in a wireless service provider's coverage, and that the proposed facility is the least intrusive means for closing that gap within said wireless service provider's network.~~

~~(c) In granting any waiver, the city may impose conditions to the extent the city concludes such conditions are necessary to minimize any adverse effects of the proposed small wireless facility within a 500-foot radius of the proposed location, or to protect the health, safety, and welfare of the public.~~

~~(d) The city shall grant or deny a request for a waiver within 45 days after receiving such request.~~

Sec. 132-~~19~~18. - Administratively approved uses.

The following use may be approved by the city manager, or designee after conducting an administrative review:

(1) Locating antennas on existing structures or towers consistent with the terms of below:

a. Antennas on existing non-tower structures. Any antenna which is attached to an existing non-tower structure shall be approved by the city manager, or designee, as an accessory use to any commercial~~,~~ or institutional~~, or multifamily structure of eight or more dwelling units~~, provided:

1. The antenna does not extend more than 30 feet above the highest point of the structure;

2. The antenna complies with all applicable FCC and FAA regulations; and

3. The antenna complies with all applicable ~~building~~ codes.

Upon receipt of an application for such above use, the city manager shall notify the city commissioner of the district in which the proposed use is located.

Sec. 132-~~20~~19. - Appeals.

Any person adversely affected by a decision of the city manager, or designee, in the permitting, enforcement or interpretation of any of the terms or provisions of this chapter may appeal that decision to the city commission if an appeal to the City Commission is not preempted by Florida Statutes, as may be amended from time to time. Such appeal must be taken by filing written notice with the city manager, or designee, with a copy to the city clerk, within 30 days after the decision of the city manager, or designee. Each appeal must be accompanied by a payment in sufficient amount to cover the cost of publishing and mailing notices of hearings. Failure to file such appeal constitutes acceptance of the permit and any conditions thereof or the denial of the application. Where a notice of appeal to the city manager, or designee, is not timely filed as provided in this section, such right to appeal is waived. If an appeal is preempted by Florida Statutes, then an appeal shall be filed with a court of competent jurisdiction.

Sec. 132-~~21~~20. - Insurance.

(a) A provider shall provide, pay for, and maintain with companies satisfactory to the city, the types of insurance described in this section. All insurance must be from responsible companies duly authorized to do business in the state and having a financial rating in Best's Insurance Guide of B+ Class VI A-Class VII or better. All liability policies must provide that the city is an additional insured as to such provider's operations in the public rights-of-way and must provide the severability of interest provision. The required coverages must be evidenced by properly executed certificates of insurance on forms furnished by the official. Certified copies of the policies required by this section are acceptable in lieu of such certificates of insurance and must be furnished at the time of application to the official within five days of the city's request therefore. Renewal certificates must be provided to the city at least ten days' prior to the expiration of the current coverages. The certificates must be manually signed by the authorized representative of the insurance company. Thirty days' advanced written notice by registered or certified mail must be given to the city of any cancellation intent not to renew or reduction in the policy coverages. Provider shall also notify risk management within 24 hours after the receipt of any notices of expiration, cancellation, non-renewal or material management. Companies issuing the insurance policies must have no recourse against the city for payment or premiums or assessments or for any deductibles which are the sole responsibility and risk of the provider. The policy clause "other insurance" will not apply to any

insurance coverage currently held by the city, to any such future coverage, or to the city's self-insured retentions of whatever nature.

(b) The limits and types of coverage of insurance required will not be less than the following:

(1) *Commercial general liability insurance*. Commercial general liability insurance must be written on ISO Occurrence Form CG 00 01 or an equivalent substitute form to cover liability arising from premises and operations, independent contractors, products and completed operations, personal and advertising injury, blanket contractual, and XCU exposures, unless waived by the city. Completed operations liability coverage must be maintained for a minimum of one year following the cessation of the placement of communications facilities in the public rights-of way. The combined bodily injury and property damage limit must not be less than $5,000,000.00 each occurrence and annual aggregate and must apply specifically to the provider's activities in the public rights-of-way.

(2) *Automobile liability insurance*. Automobile liability insurance must be maintained in accordance with the laws of the state as to the ownership, maintenance and use of all owned, non-owned, leased and hired vehicles. The combined bodily injury and property damage limit must not be less than $5,000,000.00 each accident.

(3) *Workers' compensation/employer's liability insurance*. Workers' compensation insurance must cover all employees engaged in work for the provider in accordance with the laws of the state. The employer's liability limit must not be less than $500,000.00 disease each employee, $500,000.00 disease aggregate and $500,000.00 each accident.

(4) *Environmental pollution liability Insurance*. The permittee shall procure and maintain at its expense or cause its contractor or subcontractor to procure and maintain throughout the term of this permit, Contractors Pollution Liability Insurance including contractual liability coverage to cover liability and legal expenses arising out of cleanup, removal, storage, or handling of hazardous or toxic chemicals, materials, substances, or any other pollutants by the permittee or any subcontractor resulting from pollution conditions associated with the personal wireless services facility in an amount not less than $1,000,000 each occurrence combined single limit for bodily injury and property damage.

(c) Notwithstanding the foregoing, a provider may provide such coverage through an actuarially sound and prudent self-insurance program that is satisfactory to the city.

Sec. 132-~~22~~21. - Construction bond.

(a) The city ~~may~~ shall require a construction bond in compliance with F.S. § 337.401, as amended, to secure restoration of the postconstruction rights-of-way to the preconstruction condition.

(b) The construction bond must be limited to not more than 18 months after the construction to which the bond applies is completed.

(c) For any financial obligation required by an authority allowed under this section, the city shall accept a letter of credit or similar financial instrument issued by any financial institution that is authorized to

do business within the United States, provided that a claim against the financial instrument may be made by electronic means, including by facsimile.

(d) A provider of communications services may add an authority to any existing insurance policy, or other relevant financial instrument, and the authority must accept such proof of coverage without any conditions other than consent to venue for purposes of any litigation to which the authority is a party. An authority may not require a communications services provider to indemnify it for liabilities not caused by the provider, including liabilities arising from the authority's negligence, gross negligence, or willful conduct.

Sec. 132-~~23~~22. - Indemnification.

(a) By reason of the acceptance of a registration or a permit under this chapter, the city does not assume liability for injuries to persons, damage to property, or loss of service claims by parties other than the registrant or the city; or for claims or penalties of any sort resulting from the installation, placement, maintenance, and/or operation of communication facilities by registrants or activities of registrants.

(b) To the fullest extent permitted by state law, a registrant shall defend, indemnify, and hold the city whole (including the members of its commission, board, its officers, officials, agents and employees) and harmless from all costs, liabilities, and claims for damages of any kind arising out of the construction, presence, placement, installation, maintenance, repair or operation of its communications facilities, whether any act or omission complained of is authorized, allowed, or prohibited by a permit, inspection of plans or work by the city, except to the extent that such claims are caused by the sole negligence or willful misconduct of the city. This section is not, as to third parties, a waiver of any defense or immunity otherwise available to the registrant or to the city; and the registrant, in defending any action on behalf of the city, shall be entitled to assert in any action every defense or immunity that the city could assert in its own behalf. The provisions of this section include, but are not limited to, the city's reasonable attorneys' fees incurred in defending against any such claim, suit, or proceeding(s).

(c) The city agrees to notify the registrant, in writing, within 30 days of the city receiving notice, of any issue it determines may require indemnification.

(d) This indemnification obligation is not limited in any way by a limitation of the amount or type of damages or compensation payable by or for the registrant under workers' compensation, disability, or other employee benefit acts, or the acceptance of insurance certificates required under this chapter, or the terms, applicability, or limitations of any insurance held by the registrant.

(e) The registrant shall investigate, handle, respond to, provide defense for, and defend any such claims at its sole expense and shall bear all other costs and expenses related thereto, even if the claim is groundless, false, or fraudulent, and if called upon by the city, the registrant shall assume and defend not only itself but also the city, in connection with any such claims and any such defenses shall be at no cost or expense whatsoever to the city, provided the city retains the right to select counsel of its own choosing. The city may not settle or compromise any matter for which a

registrant is obligated to indemnify without the prior written consent of the registrant. The registrant shall not unreasonably withhold such consent.

(f) The city does not waive any rights against the registrant, which it may have because of this indemnification, or because of the acceptance by, or the registrant's deposit with the city of any of the insurance policies required by this chapter for registration.

(g) This indemnification by the registrant applies to all damages and claims for damages of any kind suffered regardless of whether such insurance policies have been determined to be applicable to any such damages or claims for damages.

(h) Nothing contained in this section will be construed or interpreted as denying to either party any remedy or defense available to such party under the laws of the State of Florida or as a waiver of sovereign immunity beyond the waiver provided in F.S. § 768.285, as amended.

(i) The indemnification requirements under this section and this chapter will survive and be in full force and effect after the termination or cancellation of a registration.

Sec. 132-~~24~~23. - Reservation of rights.

The city hereby expressly reserves all of the following rights:

(1) To exercise its municipal home rule powers, now or hereafter, to the fullest extent allowed by law with regard to the access, use and regulation of the public rights-of-way.

(2) To amend this chapter as it finds necessary in the lawful exercise of its municipal authority.

(3) To adopt or enact by resolution or ordinance, in addition to the provisions contained herein and in any existing applicable ordinances, such additional reasonable regulations as city commission finds necessary in the exercise of the city's police powers.

(4) To exercise the power of eminent domain, consistent with applicable federal and state law, to acquire property that may include that property owned or leased by a communications service provider.

(5) As and when deemed necessary by city commission to be in the interest of the city or its residents, to abandon portions of the public rights-of-way within the proper exercise of its municipal authority and without notice to or the consent of any communications service provider. The city will not be responsible for any costs, damages, loss or other expense to the communications services provider as a result of the city's abandonment of any public rights of-way.

(6) To place and maintain, and franchise or permit to be placed or maintained, sewer, gas, water, electric, storm drainage, communications, and other types of facilities, cables or conduit, and to do, and to permit to be done, any underground and overheard installation or improvement that may be deemed necessary or proper by the city in the public rights-of-way occupied by any communications service provider.

(7) Without limitation, the right to alter, change, or cause to be changed, the grading, installation, relocation, or width of any public rights-of-way within the city limits and within said limits as the same may from time to time be altered.

(8) To require a reseller to register in accordance with section 132-5 to the extent such reseller wants the right to place or maintain facilities in the public rights-of-way. Any person using or leasing facilities owned by a registered communications services provider is not, therefore, entitled to any rights to place or maintain communications facilities in the public rights-of way, unless such person registers with the city.

Sec. 132-24. - Review fees and costs.

*. T*o the extent allowed by federal and state law, the Applicant shall be responsible and pay an application fee and Development review costs incurred by the city relating directly to the review, processing, and inspection of an application or facility relating to an application, proposal, or project, including, but not limited to

(a) *In-House Costs* which mean the costs to the city of the administrative and meeting time spent by city staff reviewing and processing an application, proposal, or project, and

(b) *Consultant Costs* which mean the direct expenses incurred by the city, or the reasonable value of services, as the case may be, for consultants who review the specific application, proposal, or project at the direction of the city related to the review of an application, proposal, or project.

CITY COMMISSION MEETING
CITY OF ST. PETE BEACH
COMMISSION CHAMBERS

Agenda Report

Agenda Title Name: Resolution 2025-27: Approving Conditional Use Permit No. 25133 for open deck dining on the second and third floors of a newly constructed restaurant on the property located at 804 Pass-a-Grille Way.

Action Request: Motion Options: Motion to approve / approve with modifications, / deny, continue to date certain of [specify date]] Resolution 2025-27.

Strategic Objective: Community Prosperity

Date: December 16, 2025

Prepared By: Gilbert Martinez, Senior Planner

Through: Kristin Coman, Senior Planner
Laura Canary, Community Development Director

Summary of Issue: The applicant requests approval of a Conditional Use Permit pursuant to Section 40.4 and of the City's Land Development Code to allow outdoor seating on the second and third occupiable level of a proposed restaurant located at 804 Pass-a-Grille Way within the Community Redevelopment District – Eighth Avenue (CRD-EA). The proposed second- and third-level outdoor seating areas are architecturally integrated covered patios. No live or amplified music is proposed. The structure conforms to the 35-foot height limit, required setbacks, and coastal architectural character of Pass-a-Grille. The Technical Review Committee reviewed the proposal and confirmed compliance with dimensional, access, and infrastructure requirements.

Funding: N/A

Attachments:

1. 25133 Resolution 2025-27
2. Staff Presentation 2025-27
3. 25133 804 PAG CUP STAFF REPORT (1)
4. Application
5. Renderings and Plans
6. PAG 804 Survey - Digital Signature
7. Posting 222025

RESOLUTION 2025-27

A RESOLUTION OF THE CITY OF ST. PETE BEACH, FLORIDA, AUTHORIZING A CONDITIONAL USE PERMIT FOR OPEN DECK DINING ON THE SECOND AND THIRD FLOORS OF A NEWLY CONSTRUCTED RESTAURANT ON THE PROPERTY LOCATED AT 804 PASS-A-GRILLE WAY AT PARCEL NUMBER 19-32-16-58932-005-0030 PURSUANT TO LAND DEVELOPMENT CODE SECTION (LDC Sec. 40.4.(b); INCORPORATING THE CONDITIONS OUTLINED HEREIN; AND PROVIDING FOR CORRECTION OF SCRIVENER'S ERROR AND AN EFFECTIVE DATE.

WHEREAS, Section 4.7 of the City of St. Pete Beach's Land Development Code requires the City Commission to adopt conditional use permits by resolution.

WHEREAS, Section 40.4(b) of the City of St. Pete Beach's Land Development Code requires a conditional use permit to establish open deck dining on the second and third floors of a newly constructed restaurant, with the third-floor deck for 804 Pass-a-Grille Way.

WHEREAS, Mike Keller of Fraze Design Inc. for John Dashiell has made complete an application to establish open deck dining on the second and third floors of a newly constructed restaurant, with the third-floor deck for 804 Pass-a-Grille Way

WHEREAS, this case was reviewed by Technical Review Committee on October 22, 2025, where comments were shared pertaining to second and third level open deck dining for 804 Pass-a-Grille Way

WHEREAS, "applicant" or "owner" as used herein shall include successors, assigns, and legal representatives.

WHEREAS, notice of this hearing has been provided in accordance with applicable law.

WHEREAS, the City Commission has the authority to approve none, some, or all of the requested conditional uses.

NOW, THEREFORE, BE IT RESOLVED BY THE CITY COMMISSION OF THE CITY OF ST. PETE BEACH, THAT:

SECTION 1. Recitals. The above recitals ("Whereas" clauses) are true and correct and adopted hereby as findings, purpose and intent of the City Commission.

SECTION 2. The City Commission hereby approves the requested conditional use permit application number #25133, incorporated herein by reference, and with the list of conditions enumerated in Exhibit "A" incorporated herein.

SECTION 3. Scrivener's Error. The City Attorney may correct scrivener's errors found in this Resolution by filing a corrected copy of this Resolution with the City Clerk.

SECTION 4. Effective Date. This resolution shall take effect immediately upon adoption.

PASSED AND APPROVED BY THE CITY COMMISSION OF THE CITY OF ST. PETE BEACH, FLORIDA, THIS _____ DAY OF _____, 2025.

CITY COMMISSION, CITY OF ST. PETE BEACH, FLORIDA.

_____
Adrian Petrila, Mayor

ATTEST:

_____
Renee Rose, City Clerk

APPROVED AS TO FORM AND LEGAL SUFFICIENCY:

_____
Ralf Brookes, City Attorney

EXHIBIT "A"
Conditions

1. **CUP Runs with the Land**
   Any future owner must adhere to the approved conditions.

2. **No Outdoor Live Music Allowed**
   Live or amplified outdoor music would require a future CUP amendment.

3. **No Changes to Loading/Unloading Practices**
   Any modification to operational logistics to the proposed rear loading and unloading practice must be reviewed through a CUP amendment.

4. **Future Amendments Required for New Impacts**
   Ensures the City can evaluate potential effects and protect the surrounding historic coastal character.

Conditional Use Permit

Case No. 25133

Property Address: 804 Pass-A-Grille Way

Agent/Owner: Mike Keller of Fraze Design Inc. for John Dashiell

Request: *Conditional Use Permit:* Establishment of open deck dining on the second and third floors of a newly constructed restaurant, with the third-floor deck requiring the subject conditional use permit (LDC Sec. 40.4.(b)

Listing of Exhibits

- Aerial
- Zoning Map
- Survey
- Renderings
- Floor Plan & Request Details
- Summary of Findings
- Basis for Approval with Conditions
- Basis for Denial in This Location
- Recommended Staff Conditions
- Action Options

St. Pete Beach
The Sunset Capital of Florida
COMMUNITY DEVELOPMENT

Aerial

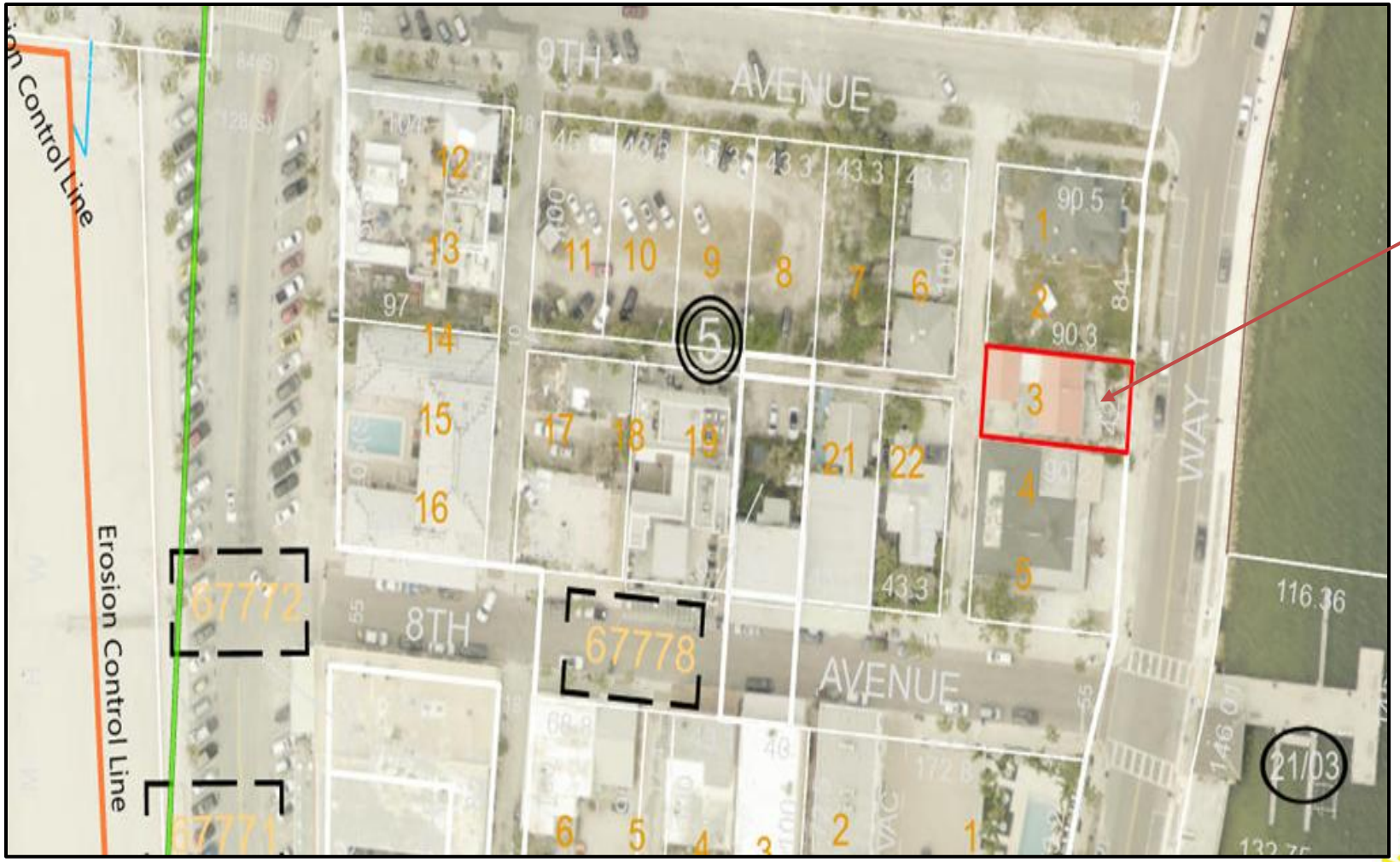
Subject Property
9TH AVENUE
8TH AVENUE
WAY
Erosion Control Line
67772
67778
67771
21/03

Zoning Map

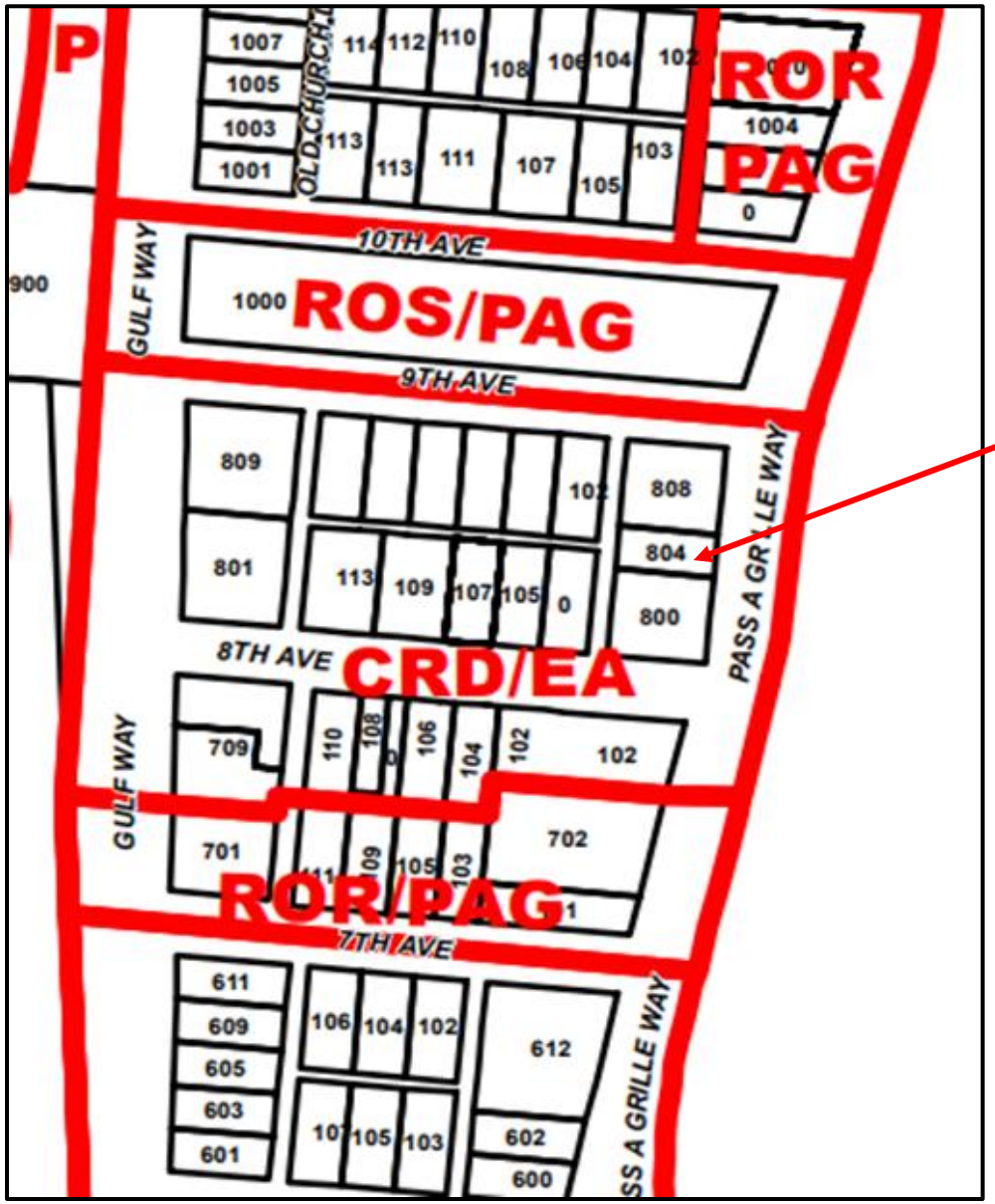

Subject Property

Survey

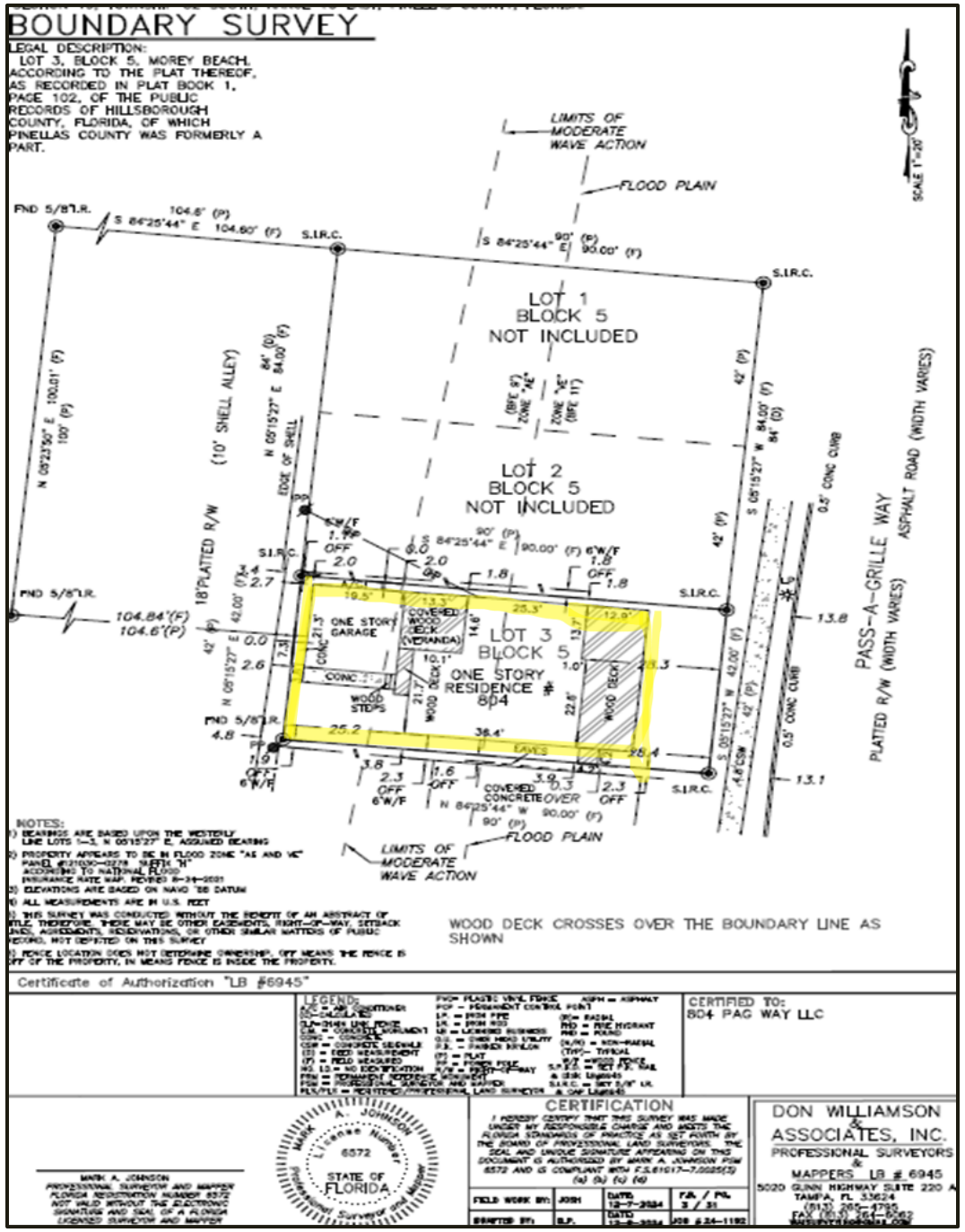

St. Pete Beach
The Sunset Capital of Florida
COMMUNITY DEVELOPMENT

Rendering

Front of Building on Pass-a-Grille Way

South Side of Building

St. Pete Beach
The Sunset Capital of Florida
COMMUNITY DEVELOPMENT

Rendering

North Side of Building

Rear of Building / Alley View

St. Pete Beach
The Sunset Capital of Florida
COMMUNITY DEVELOPMENT

Floor Plan

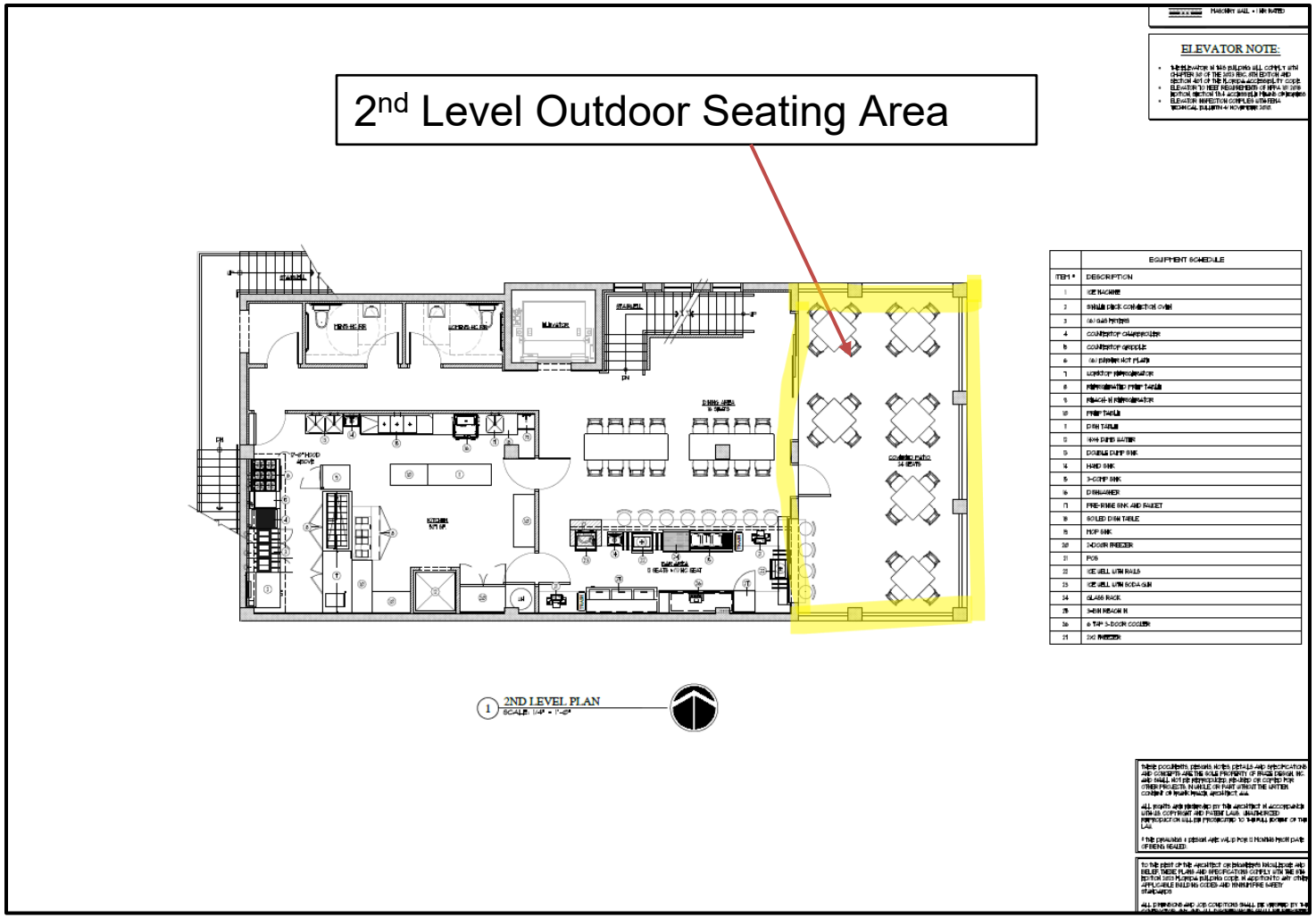

St. Pete Beach
The Sunset Capital of Florida
COMMUNITY DEVELOPMENT

Floor Plan

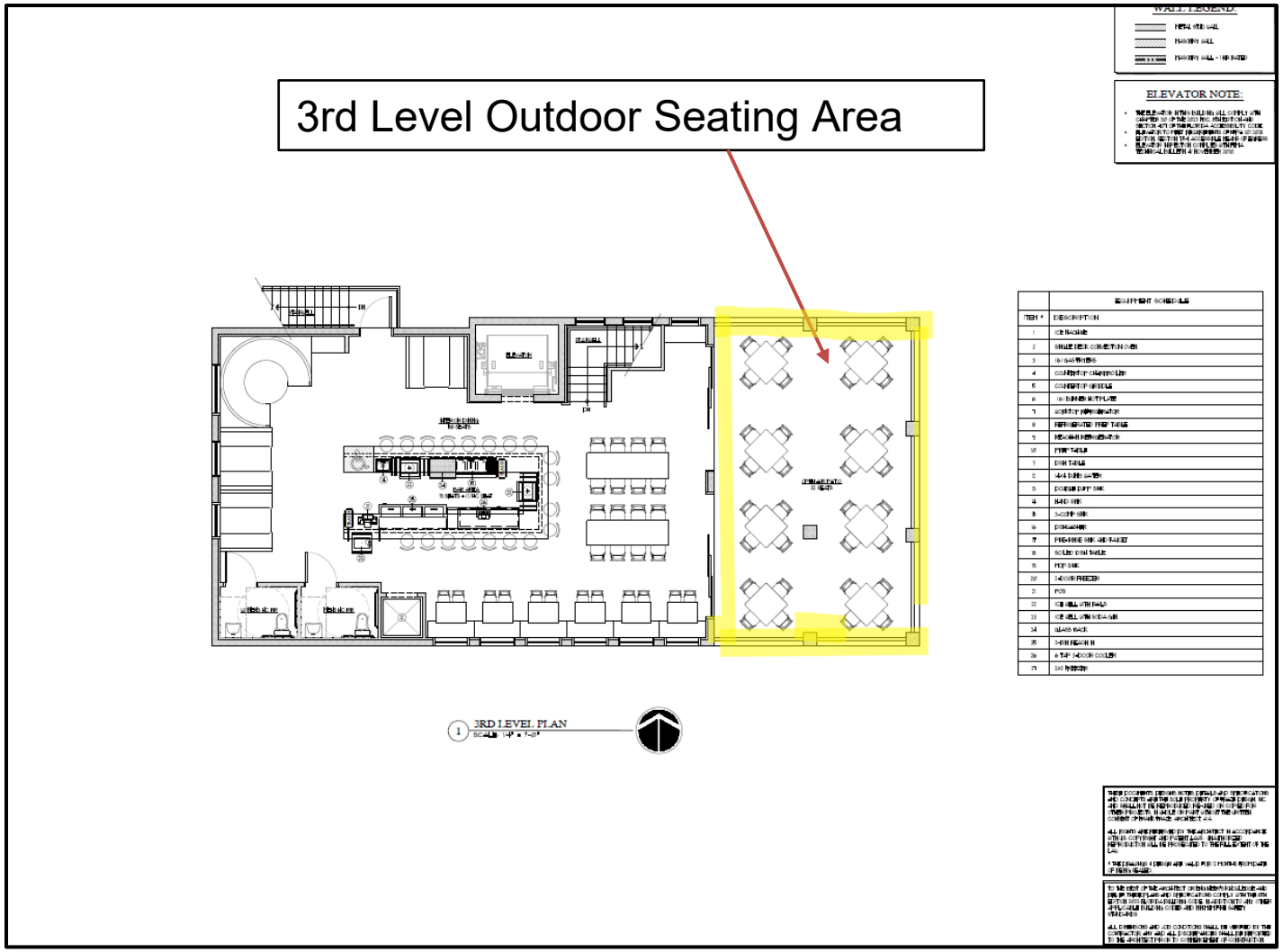

St. Pete Beach
The Sunset Capital of Florida
COMMUNITY DEVELOPMENT

Request Details

- **LDC Sec. 40.4(B)**: Roof dining and/or drinking areas, subject to conditional use requirements as well as **Section 4.12** of the Land Development Code (Criteria for Review of Conditional Use Applications within CRD-EA)

- Request for **500 Sq .Ft**. for exterior dining on the **2nd level** and **640 Sq. Ft**. of exterior seating on the **3rd level.**

St. Pete Beach
The Sunset Capital of Florida
COMMUNITY DEVELOPMENT

Summary of Findings

Conditional Use Permit Request

- Applicant requests CUP under LDC §§ 40.4 and 4.12to allow outdoor dining on the **2nd and 3rd levels** of a proposed restaurant at 804 Pass-a-Grille Way (CRD-EA).

- Covered outdoor patios integrated into the design of the three-story building, oriented toward the Pass-a-Grille Channel.

- No live music or amplified sound proposed for the outdoor areas.

- Hours of operation: 11:00 a.m. – 10:00 p.m., consistent with nearby commercial and recreational activity.

St. Pete Beach
The Sunset Capital of Florida
COMMUNITY DEVELOPMENT

Basis for Approval with Conditions

- **Consistent with Comprehensive Plan & LDC**
  Meets Criteria in **Sections 40.4 and 4.12 and supports Goal 1 of the Future Land Use Element** by enhancing community character and strengthening tourism-based economic activity.

- **Compatible & Context-Sensitive Design**
  Second- and third-level outdoor dining is modest in scale, architecturally integrated, and oriented toward the Pass-a-Grille Channel, reinforcing the coastal character and mixed-use pattern of the CRD-EA district.

- **No Adverse Impacts to Surrounding Area**
  No live or amplified music is proposed, operating hours match nearby commercial uses, and the layout preserves neighborhood views and avoids impacts to residential areas.

- **Code-Compliant Redevelopment**
  Project meets all applicable dimensional, design, and performance standards, including flood-resilient construction requirements, providing a walkable, high-quality improvement that supports district vitality.

St. Pete Beach
The Sunset Capital of Florida
COMMUNITY DEVELOPMENT

Recommended Conditions

CUP Runs With the Land

Any future owner must adhere to the approved conditions.

No Outdoor Live Music Allowed

Live or amplified music would require a future CUP amendment.

No Changes to Loading/Unloading Practices

Any modification to operational logistics must be reviewed through a CUP amendment.

Future Amendments Required for New Impacts

Ensures the City can evaluate potential effects and protect the surrounding historic coastal character

St. Pete Beach
The Sunset Capital of Florida
COMMUNITY DEVELOPMENT

Action Options

"Motion to **[approve / approve with conditions / deny / continue to [specify date]]** Conditional Use Permit NO. **25133/ Resolution No. 2025-27** for 804 Pass-A-Grille Way."

St. Pete Beach
The Sunset Capital of Florida
COMMUNITY DEVELOPMENT

PLANNING DIVISION
CONDITIONAL USE APPLICATION
STAFF REPORT TO THE
CITY OF ST. PETE BEACH CITY COMMISSION

CASE NO.: 25133 **HEARING DATE: December** 9, 2025
OWNER/APPLICANTS:
PREPARED BY: Gil Martinez, Senior Planner
This application is a request for a Conditional Use Permit: For the establishment of an open deck dining on the second and third floors of a newly constructed restaurant. (LDC Sec. 40.4.(b)

REQUEST:	Mike Keller of Fraze Design Inc. for John Dashiell of 804 PAG WAY LLC requests a conditional use permit to establish open deck dining on the second and third floors of a newly constructed restaurant, with the third-floor deck requiring the subject conditional use permit (LDC Sec. 40.4.(b)
LOCATION:	804 Pass-a-Grille Way; Parcel ID # 19-32-16-58932-005-0030., MOREY BEACH BLK 5, LOT 3
ACREAGE:	Approximately 0.09 acres (3,800sq. ft.) of land.
EXISTING LAND USE	CRD-EA Community Redevelopment District—Eighth Avenue on the Future land Use Map and the Zoning Map.
SURROUNDING FUTURE LAND DESIGNATIONS:	North – CRD-EA Community Redevelopment District—Eighth Avenue South – CRD-EA Community Redevelopment District—Eighth Avenue East – Pass-a-Grille Way & Channel West – Alleyway & CRD-EA Community Redevelopment District—Eighth Avenue
SURROUNDING ZONING MAP DESIGNATIONS:	North – CRD-EA Community Redevelopment District—Eighth Avenue South – CRD-EA Community Redevelopment District—Eighth Avenue East – Pass-a-Grille Way & Channel West – CRD-EA Community Redevelopment District—Eighth Avenue
SURROUNDING EXISTING USES:	North – Vacant (Former Retail) South – Restaurant Cafeteria East – Pass-a-Grille Way & Channel West –Two Unit Rental

BACKGROUND

The property at 804 Pass-a-Grille Way encompasses approximately 0.09 acres within the **Community Redevelopment District – Eighth Avenue (CRD-EA)** zoning district**.** Located along the Pass-a-Grille Channel, the site occupies a prominent location within the historic area of the city. The applicant proposes redeveloping the property with a three-story restaurant that includes second-and third level dining and beverage service areas overlooking the water. The project is designed to build on the intent of the CRD-EA zoning district; to promote and sustain the existing mixed-use development pattern and architectural character of the area, while also encouraging infill on vacant or underdeveloped lots. Submitted architectural plans illustrate a structure not exceeding 35 feet in height, meeting required setbacks of 10 feet at the front and rear and 5 feet on the sides, with an impervious surface ratio (ISR) of 0.90. The ground floor will include a walk-

in cooler, freezer, elevators, and enclosed stairwells, with screened service and loading areas located along the rear alley. The second floor features a 527-square-foot kitchen, indoor dining and bar areas, and a covered outdoor patio designed in compliance with the 2023 Florida Building Code and FEMA Technical Bulletin 4 standards for flood-resilient and accessible construction.

The surrounding area consists of a balanced mix of residential, commercial, and open-space uses, including single-family homes and recreation areas to the north, restaurants and mixed-use properties to the south, the Pass-a-Grille Channel to the east, and commercial uses to the west. Within this established setting, the proposed restaurant represents a compatible and context-sensitive infill project that supports the character, walkability, and economic vitality of the Pass-a-Grille community.

In February 2025, the Historic Preservation Board approved a Certificate of Appropriateness for Demolition of the prior on-site structure, which had deteriorated and was determined to be flood vulnerable. The new construction aligns with the City's Comprehensive Plan and ongoing efforts to revitalize the Pass-a-Grille commercial waterfront through high-quality, resilient redevelopment.

Pursuant to Sections 40.4 of the Land Development Code (Allowable Conditional Uses and Structures), the applicant is requesting a Conditional Use Permit to allow outdoor seating on the second occupiable level. No live music or amplified sound is proposed, and the intended hours of operation (11:00 a.m. to 10:00 p.m.) are compatible with surrounding commercial and recreational uses.

ZONING MAP

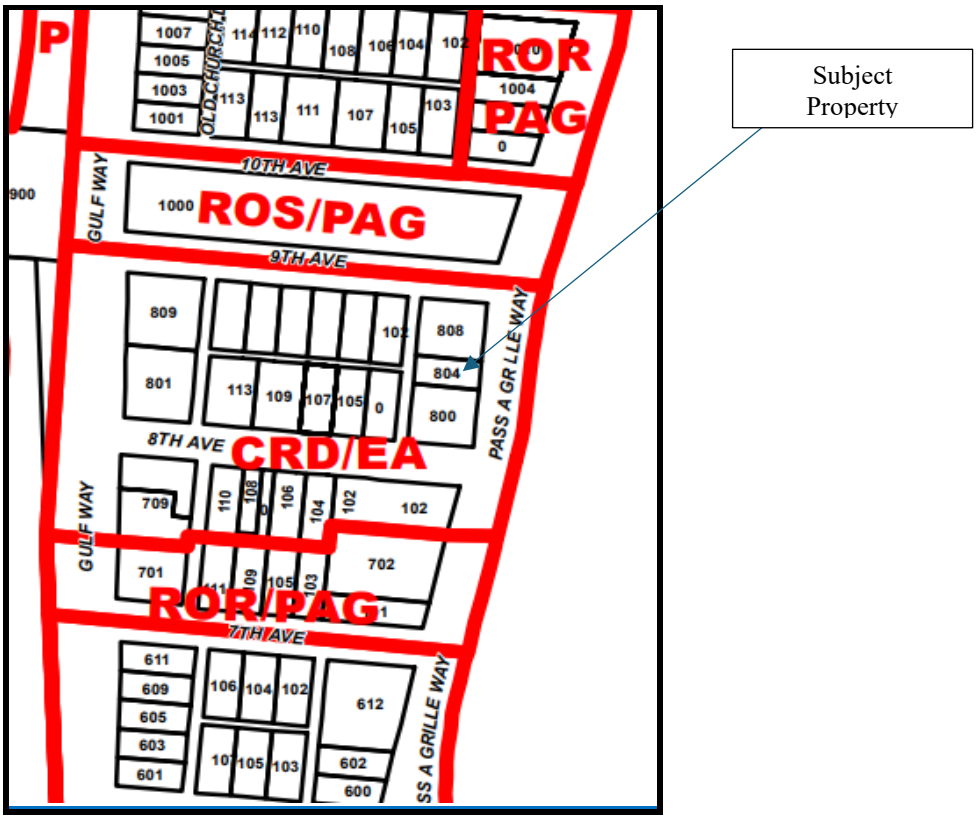

AERIAL MAP

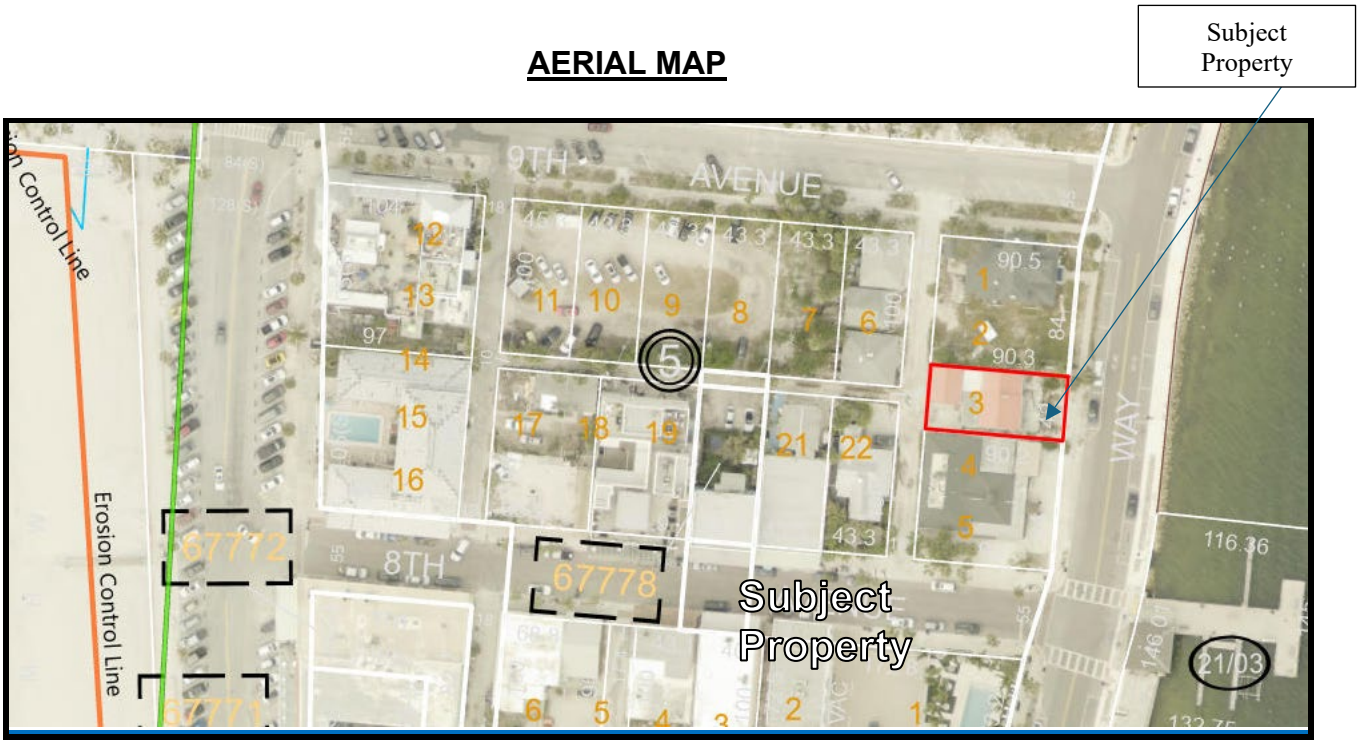

Looking West from Pass-a-Grille Way

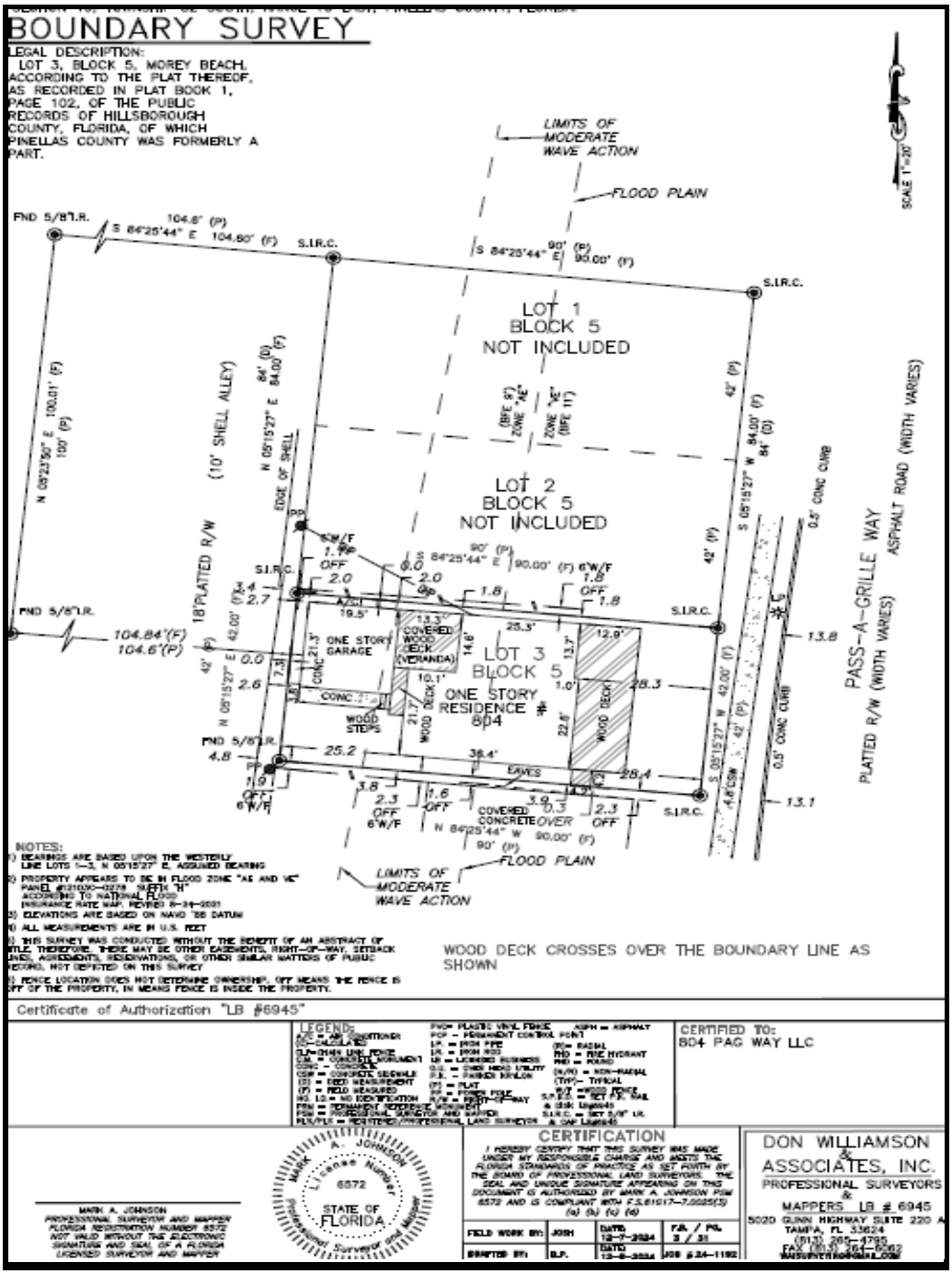
BOUNDARY SURVEY
LEGAL DESCRIPTION:
LOT 3, BLOCK 5, MOREY BEACH, ACCORDING TO THE PLAT THEREOF, AS RECORDED IN PLAT BOOK 1, PAGE 102, OF THE PUBLIC RECORDS OF HILLSBOROUGH COUNTY, FLORIDA, OF WHICH PINELLAS COUNTY WAS FORMERLY A PART.
LIMITS OF MODERATE WAVE ACTION
FLOOD PLAIN
LOT 1
BLOCK 5
NOT INCLUDED
LOT 2
BLOCK 5
NOT INCLUDED
LOT 3
BLOCK 5
ONE STORY
RESIDENCE #
804
ONE STORY GARAGE
COVERED WOOD DECK (VERANDA)
WOOD DECK
WOOD STEPS
CONC.
EAVES
COVERED CONCRETE OVER
(10' SHELL ALLEY)
18' PLATTED R/W
EDGE OF SHELL
PASS-A-GRILLE WAY
ASPHALT ROAD (WIDTH VARIES)
PLATTED R/W (WIDTH VARIES)
0.5' CONC CURB
S.I.R.C.
FND 5/8"I.R.
SCALE 1"=20'
NOTES:
1) BEARINGS ARE BASED UPON THE WESTERLY LINE LOTS 1-3, N 05°15'27" E, ASSUMED BEARING
2) PROPERTY APPEARS TO BE IN FLOOD ZONE "AE AND VE" PANEL #12103C-0278 SUFFIX "H" ACCORDING TO NATIONAL FLOOD INSURANCE RATE MAP, REVISED 8-24-2021
3) ELEVATIONS ARE BASED ON NAVD '88 DATUM
4) ALL MEASUREMENTS ARE IN U.S. FEET
5) THIS SURVEY WAS CONDUCTED WITHOUT THE BENEFIT OF AN ABSTRACT OF TITLE. THEREFORE, THERE MAY BE OTHER EASEMENTS, RIGHT-OF-WAY, SETBACK LINES, AGREEMENTS, RESERVATIONS, OR OTHER SIMILAR MATTERS OF PUBLIC RECORD, NOT DEPICTED ON THIS SURVEY
6) FENCE LOCATION DOES NOT DETERMINE OWNERSHIP. OFF MEANS THE FENCE IS OFF OF THE PROPERTY, IN MEANS FENCE IS INSIDE THE PROPERTY.
WOOD DECK CROSSES OVER THE BOUNDARY LINE AS SHOWN
Certificate of Authorization "LB #6945"
LEGEND:
CERTIFIED TO:
804 PAC WAY LLC
MARK A. JOHNSON
PROFESSIONAL SURVEYOR AND MAPPER
FLORIDA REGISTRATION NUMBER 6572
NOT VALID WITHOUT THE ELECTRONIC SIGNATURE AND SEAL OF A FLORIDA LICENSED SURVEYOR AND MAPPER
STATE OF FLORIDA
CERTIFICATION
I HEREBY CERTIFY THAT THIS SURVEY WAS MADE UNDER MY RESPONSIBLE CHARGE AND MEETS THE FLORIDA STANDARDS OF PRACTICE AS SET FORTH BY THE BOARD OF PROFESSIONAL LAND SURVEYORS. THE SEAL AND UNIQUE SIGNATURE APPEARING ON THIS DOCUMENT IS AUTHORIZED BY MARK A. JOHNSON PSM 6572 AND IS COMPLIANT WITH F.S.61G17-7.0025(3) (a) (b) (c) (d)
FIELD WORK BY: JOSH
DATE: 12-7-2024
F.B. / PG. 3 / 31
DRAFTED BY: B.P.
DATE: 12-8-2024
JOB # 24-1192
DON WILLIAMSON & ASSOCIATES, INC.
PROFESSIONAL SURVEYORS & MAPPERS LB # 6945
5020 GUNN HIGHWAY SUITE 220
TAMPA, FL 33624
(813) 265-4795
FAX (813) 961-5642

Current Site Photo

Adjacent Lot-North of Property

ANALYSIS

The applicant requests approval of a Conditional Use Permit pursuant to Section 40.4 and 4.12 of the City's Land Development Code to allow outdoor seating on the second and third occupiable level of a proposed restaurant located at 804 Pass-a-Grille Way within the Community Redevelopment District – Eighth Avenue (CRD-EA). The proposed second and third level dining areas are designed as a covered outdoor patio oriented toward the Pass-a-Grille Channel and integrated into the overall architecture of the new three-story building. No live music or amplified

sound is proposed for the outdoor area, and the restaurant hours of operation (11:00 a.m. to 10:00 p.m.) are consistent with surrounding commercial and recreational activity patterns.

TRC COMMENTS:

The project was reviewed by the Technical Review Committee (TRC), which confirmed that the proposal meets all applicable dimensional, access, and building standards. Comments from Building and Public Works staff indicated that existing roadways, drainage, and utility systems are adequate to support the use, and that service and loading areas will remain screened and functionally separated from the pedestrian environment. Concurrency and site planning requirements will be evaluated under a site plan prior to issuance of construction permits for the subject project should this use be approved

Land Development Code Section 4.4 – Standards for Review

When evaluating Conditional Use requests, the City Commission must consider the standards outlined in Section **4.4 of the Land Development Code.** Staff's findings are as follows:

1. **Consistency with the Comprehensive Plan and applicable regulations The proposed outdoor seating use is consistent with the City's Comprehensive Plan, particularly Goal 1 and Objective 1.4 of the Future Land Use Element, which encourage redevelopment that enhances neighborhood character, supports economic vitality, and balances tourism uses with community livability.**

   The request complements the City's redevelopment objectives by activating an underutilized site through pedestrian-friendly, visitor-serving use that strengthens the Pass-a-Grille commercial district.

2. **Compatibility with the character of the existing area.**

   The property is located within an established mixed-use commercial corridor, surrounded by restaurants, small-scale retail, open space, and limited residential development. The proposed second-level outdoor dining area is designed as an architectural extension of the building rather than an open deck or rooftop feature, thereby maintaining compatibility with nearby properties. The project's scale, setbacks, and design reflect the traditional coastal vernacular character of Pass-a-Grille and will not adversely affect the appearance or function of the surrounding area.

3. **Transportation system capacity and access**

   The proposal does not alter existing vehicular access patterns or parking demand beyond what is typical for restaurant uses in the district. Access will continue to be provided from Pass-a-Grille Way and the rear alley, and pedestrian circulation will be improved through enhanced frontage design and building orientation. No adverse traffic or parking impacts are anticipated.

4. **Adequacy of parking, loading, and service areas**

   The loading area and refuse facilities are located at the rear of the property, screened from view, and accessible via the existing alley. The outdoor seating is accommodated

within the building envelope and does not increase the required parking space beyond what is already provided.

5. **Preservation of public health, safety, and welfare**

The proposed outdoor dining area complies with all relevant provisions of the Florida Building Code (8th Edition, 2023) and FEMA Technical Bulletin 4 for flood-resilient design. Given its modest seating capacity, contained design, and the absence of live or amplified music, the use is not expected to generate adverse impacts related to noise, lighting, or late-night activity.

6. **Financial and technical capacity**

The applicant has demonstrated financial and technical ability to complete the improvements as proposed.

7. **Compliance with applicable standards**

The proposal meets all additional standards for the CRD-EA District and aligns with context-appropriate redevelopment along Pass-a-Grille Way.

Pursuant to Section 4.12 of the Land Development Code (Criteria for Review of Conditional Use Applications), the applicant's request for a **Conditional Use Permit** to allow outdoor seating on the second level of the proposed restaurant at 804 Pass-a-Grille Way has been evaluated in accordance with the review standards applicable within the Community Redevelopment District – Eighth Avenue (CRD-EA). Staff's findings are as follows:

1. **Utility Infrastructure**

The proposed development has been reviewed by Building, Public Services, staff, who have confirmed that existing utility infrastructure— including sanitary sewer, potable water, reclaimed water, electrical service, and telecommunications—is adequate to serve the project. All new utility connections will be installed underground in compliance with City standards and coordinated with final construction plans

2. **Transportation Infrastructure**

The proposal maintains existing access from Pass-a-Grille Way and the rear alley. Pedestrian circulation will improve through enhanced frontage design, and no adverse traffic impacts are anticipated.

3. **Hydrological Features and Stormwater Management**

The project includes a stormwater management system designed to meet current regulatory requirements. Given the site's small footprint (0.09 acres) and location within a coastal area, all drainage improvements will be engineered to manage runoff on-site and prevent impacts to the adjacent Pass-a-Grille Channel. The design also supports flood resiliency through adherence to FEMA Technical Bulletin 4 and the Florida Building Code (8th Edition, 2023).

4. Aesthetic and Architectural Features

Architectural plans prepared by Fraze Design, Inc. depict a three-story coastal-style structure not exceeding 35 feet in height, with required setbacks of 10 feet front and rear and 5 feet on the sides, and an impervious surface ratio (ISR) of 0.90. The second-level outdoor dining area is fully integrated into the building design as a covered balcony, rather than a separate or rooftop element.

The proposed architecture complements the historic coastal character of Pass-a-Grille, incorporates articulated façades and balconies, and enhances the pedestrian environment through active frontage and human-scale detailing. Views toward the Pass-a-Grille Channel will be preserved through the building's orientation and transparent design features.

5. Site Landscaping, Open Space, and Impervious Surface

As illustrated in the provided renderings, on-site landscaping will be provided along the property's perimeter and within the right-of-way frontage to soften the building edge and contribute to the corridor's visual appeal. The 0.90 ISR is consistent with surrounding commercial properties and maintains appropriate drainage performance through engineered pervious design elements.

6. Operational and Functional Requirements

The proposed hours of operation (11:00 a.m. to 10:00 p.m.) are compatible with the surrounding mix of commercial and recreational uses. No live or amplified music is proposed in the outdoor seating area, minimizing potential noise or nuisance impacts. The layout accommodates safe circulation, adequate lighting, and screened service areas, ensuring orderly site function and protection of nearby uses.

7. Fire Suppression and Facility Security

The project will comply with Fire Code requirements for commercial structures, including fire suppression, alarm systems, and emergency egress. The building incorporates two enclosed stairwells and an elevator designed to meet both accessibility and safety standards. Coordination with the Pinellas Suncoast Fire & Rescue District will occur during final permitting.

8. Emergency Management and Hurricane Evacuation

Although the property is located within a **Coastal High Hazard Area**, the proposed *restaurant is a non-residential use that will not provide overnight accommodation or serve as shelter. Occupancy is limited to staff and patrons during business hours, and the building is designed for rapid closure and evacuation in advance of storm events*.

<u>Land Development Code Sec. 4.4 – Standards for review.</u>
When considering an application for approval of conditional use, the City Commission review shall consider the following standards:

(1) Whether the conditional use is consistent with the goals, objectives, and policies of the Comprehensive Plan, any adopted special area plan and these regulations.

The Conditional Use Permit request is consistent with the Future Land use Element of the Comprehensive Plan in the following ways:

<u>FUTURE LAND USE ELEMENT:</u>

GOAL 1:

a. Maximizing the potential for economic benefit resulting from the tourist trade and the enjoyment of natural and man-made resources by residents and visitors alike.

Objective 1.4

Consistent with this Comprehensive Plan, as amended, the City shall enhance and protect the City's character through the encouragement of redevelopment which supports an orderly and aesthetic mixture of land uses.

The requested Conditional Use Permit request is consistent with the Future Land Use Element of the Comprehensive Plan in the following ways:

<u>FUTURE LAND USE ELEMENT:</u>

GOAL 1

Objective 1.1

The integrity and quality of life throughout the City, including existing residential neighborhoods, as well as core commercial and resort areas, will be maintained and encouraged to be improved or redeveloped to enhance neighborhood character through the enforcement of the Land Development Code in accordance with the Future Land Use Element and the Countywide Plan.

(2) **Whether the proposed use will be compatible with the character of the existing area, including existing structures and structures under construction, existing public facilities and public facilities under construction, and residential, commercial and/or service facilities available within the existing area. More specifically:**

a. **Whether the overall appearance and function of the area will be significantly affected. Consideration shall be given to the existence of other uses in the area, based on the number, size, and location of the uses and the intensity and scale of the proposed and existing uses in the area;**

*The second-and third- level outdoor seating area is integrated into the building design and complements the existing pattern of waterfront restaurants. Its scale and orientation maintain the corridor's visual character and do not alter the area's established function***.**

b. **Whether the application will preserve any city, state or federally designated historic, scenic, archaeological, or cultural resources;**

The previous structure was approved for demolition by the Historic Preservation Board due to deterioration and flood vulnerability. The new building's design draws from the district's traditional coastal style.

c. **Whether the application will be compatible with adjacent development, if any, based on characteristics such as size, building style and scale; or whether such incompatibilities are mitigated through such means as screening, landscaping, setbacks, and other design features.**

*The project is compatible with nearby commercial and mixed-use properties, though its three-story, 35-foot height is taller than most adjacent one- and two-story buildings. The Berkeley provides a nearby precedent for similar height. The building's mass is softened through façade articulation, balconies, and screened service areas, helping mitigate the scale difference. The coastal architectural detailing is appropriate and consistent with surrounding developmen*t.

d. **Whether the application will have significant adverse impacts on the livability and usability of nearby land due to noise, dust, fumes, smoke, glare from lights, late-night operations, odors, vehicular traffic, truck and other delivery trips, the amount, location, and nature of any outside activities, potential for increased litter, or privacy and safety issues. Whether the transportation system is capable of adequately supporting the proposed use in addition to the existing uses in the area. Evaluation factors include street capacity and level of service, access to arterials, transit availability, on-street parking impacts, if any, site access requirements, neighborhood impacts, and pedestrian safety;**

The proposal will not generate significant impacts related to noise, traffic, or lighting. No live or amplified music is proposed, and the operating hours (11:00 a.m.–10:00 p.m.) are consistent with nearby businesses. The seating area faces the waterfront and is buffered from residences.

(3) **Whether the minimum off-street parking area required and the amount of space needed for the loading and unloading of trucks, if applicable, will be provided and will function properly and safely;**

All loading and refuse areas are located along the rear alley and fully screened. The second and third -level seating is within the building envelope and does not alter parking requirements.

(4) **Whether generally, the public health, safety and welfare will be preserved, and any reasonable conditions necessary for such preservation have been made;**

The project meets the Florida Building Code and FEMA flood-resilient design standards. Two enclosed stairwells and an elevator provide safe access. The restaurant's use poses no health or safety concerns.

(5) **Whether the applicant has demonstrated the financial and technical capacity to complete any improvements and mitigation necessitated by the development as proposed and has made adequate legal provision to guarantee the provision such improvements and mitigation;**

The owner's retention of Fraze Design, Inc. as project architect demonstrates both the financial capacity and professional support needed to carry the project through to completion.

Whether the proposed use complies with all additional standards imposed on it by the particular provision of these regulations authorizing such use and by all other applicable requirements of the regulations of the City of St. Pete Beach.

The project meets all requirements of the Land Development Code and CRD-EA District standards, advancing the district's goals for pedestrian-friendly, high-quality coastal redevelopment.

FUTURE LAND USE ELEMENT:

Policy 2.3.4 The City shall develop and implement Land Development Standards which preserve and promote the continuance of the existing development pattern and architectural aesthetic of Special Planning Area Eighth Avenue commercial district in the Pass-a-Grille area.

The project consists in its intent to preserve and promote the existing development pattern and architectural aesthetic of the Eighth Avenue commercial district in Pass-a Grille. It continues the established commercial use, reinforces the existing built pattern along Eighth Avenue and Pass a Grille Way, and introduces second and third level outdoor dining that supports a walkable, pedestrian oriented environment.

Coastal detailing, articulated facades, balconies, and screened service areas are compatible with the district's architectural character and help the project blend with the established historic coastal setting.

Conditional uses are specifically listed uses that generally would not be allowed by right in all locations but can be allowed if controlled as to number and location if compatible as conditioned with existing surrounding uses. Conditional use must be consistent with the comprehensive plan including the purpose, intent, goals, objectives and policies contained in the comprehensive plan, future land use category and if it meets the standards and criteria for approval of conditional uses in the zoning district. Conditional uses can be denied and does not have to be approved. A conditional use can also be approved in some circumstances and certain locations through conditions specifically tailored and intended to ensure the conditional use is compatible with surrounding uses. Specific conditions of approval should be specially designed to remove,

minimize or adequately mitigate adverse impacts that are not compatible with surrounding uses under the circumstances at the specified, proposed location.

Land Development Code section 4.1 provides that conditional uses can be approved if the concerns are minimal, approved with conditions to mitigate the impacts and concerns, or denied if the concerns are not minimal and cannot be otherwise mitigated.

"Sec. 4.1. Review of conditional use permit applications.

(a) Purpose. Certain uses are conditional rather than uses by right. They are subject to the conditional use regulations because they may, but do not necessarily, have significant adverse effects on the environment, public services, the desired character of an area, or they may create nuisances. A review of these uses is necessary due to the impact they may have on the surrounding area or neighborhood. **The conditional use review provides an opportunity to allow the use when there are minimal impacts, to allow the use but impose mitigation measures to address identified concerns, or to deny the use if the concerns cannot be resolved.**

(b) Authority. The city commission may approve applications for conditional uses in accordance with the procedures, standards and limitations of this division.

(c) Authorized conditional uses. Only those uses which are authorized in each zoning district or those nonconforming uses which are substantially damaged or destroyed and are permitted to be re-established in accordance with this ordinance may be approved as conditional uses. The designation of a use in a zoning district as a conditional use does not constitute an authorization of such use or an assurance that such use will be approved; rather, each proposed conditional use shall be evaluated by the city commission for compliance with the standards and conditions set forth in this section and for each district.

Wherever a conditional use existing on the effective date of these regulations is terminated or destroyed, subsequent conditional use of the property shall be permitted only in conjunction with the approval process specified herein. "

Florida Statutes Chapter 163 states "Compatibility" means a condition in which land uses or conditions can coexist in relative proximity to each other in a stable fashion over time such that no use or condition is unduly negatively impacted directly or indirectly by another use or condition (F.S. 163.3164(9)).

BASIS FOR APPROVAL

To approve the Conditional Use Permit for second and third level outdoor dining at 804 Pass-a-Grille Way, the City Commission must find that the proposed use is compatible with surrounding development and consistent with the Comprehensive Plan and Land Development Code. The project meets these criteria. The Future Land Use Element, Goal 1 of the Comprehensive Plan encourages redevelopment that enhances community character while supporting tourism and economic vitality. The proposed second and third level outdoor dining area advances this goal by introducing a high-quality, pedestrian-oriented improvement that contributes to the vitality of the Pass-a-Grille commercial district without generating adverse impacts.

The outdoor dining area is modest in scale, architecturally integrated into the new three-story building, and oriented towards the Pass-a-Grille Channel, away from residential areas. Its design complements the existing pattern of mixed-use and restaurant properties along the corridor,

preserves neighborhood views, and reinforces the coastal character promoted by the Community Redevelopment District – Eighth Avenue (CRD-EA).

No live or amplified music is proposed, and the restaurant's operating hours (11:00 a.m. to 10:00 p.m.) are consistent with nearby commercial uses. The project complies with all applicable dimensional, design, and performance standards, including flood-resilient construction requirements of the Florida Building Code (8th Edition, 2023) and FEMA Technical Bulletin 4.

Accordingly, staff finds the proposed conditional use fully consistent with the Comprehensive Plan, and Land Development Code Section 40.4. and 4.12. The second and third-level outdoor dining areas represents a compatible, code-compliant, and context-sensitive redevelopment that supports the City's goals for walkability, economic vitality, and the preservation of Pass-a-Grille's historic coastal character.

STAFF RECOMMENDATION

Should the City Commission approve the request, staff finds that the Conditional Use Permit for second and third level outdoor dining at 804 Pass a Grille Way is consistent with the Comprehensive Plan, the CRD EA district standards, and the Land Development Code. The proposed use is compatible with the surrounding development pattern and maintains the areas historic coastal scale and character while supporting pedestrian oriented, visitor serving redevelopment objectives.

Because Conditional Use Permits run with the land, future operational changes such as outdoor live music or modifications to loading and unloading practices may introduce impacts not evaluated in this request. Any such changes would require a future amendment to the Conditional Use Permit, allowing the city to assess potential impacts and ensure continued protection of the surrounding historic coastal character.

INFORMATION ON THE CONDITIONAL USE

What is a Conditional Use? A conditional use is a use that has operational, physical and other characteristics that may be different from those of the predominant permitted uses in a zoning district, but which is a use that compliments or may otherwise be compatible with the intended overall development within a district, provided the specified standards are met.

How do I apply for a Conditional Use? An applicant for conditional use must submit the following documents to the Community Development Department, based on the type of project proposed.

All Conditional Use Permits

- A complete and signed application. Incomplete applications will not be processed and will be returned. As such, all applicants are **STRONGLY ENCOURAGED** to meet with Community Development staff prior to submission deadlines to discuss plan submissions and the review process. Appointments can be made by calling 727.363.9229.
- A completed and signed agent authorization form if someone else will be representing the property owner at the public hearing.
- An accurate, legible, and appropriately scaled survey of the property including all existing improvements. The survey shall have been performed not more than one (10) years prior to the date of application and not less than two (2) 11"x17" copies of the survey are required for submittal. If improvements have been made to or altered on the property since the survey was performed, a new survey must be performed. Please note that an ALTA/ACSM survey completed within the past year must be submitted with application for a site plan if the conditional use permit request is approved. Applicants may wish to consider having an ALTA/ACSM survey performed at this stage to avoid unnecessary revisions during site plan submittal.
- Two scaled conceptual site plans depicting the request. The site plans can be sized from 8.5"x11" to a maximum of 24"x36" in size. These drawings are necessary to assist staff and the BOA or City Commission in the review of the request. The site plans shall contain a matrix showing the site's preliminary compliance with the zoning district's dimensional and area requirements, which can be found in the Land Development Code (LDC) under the property's zoning district. The matrix shall a column listing the LDC requirements for setbacks, density (where applicable), intensity/FAR (where applicable), minimum lot area (where applicable) impervious surface ratio, and parking, with an additional column demonstrating how the plan will comply with those standards.
- When the application involves new building construction, additions or expansions, new placement of parking, a change of use, or other construction that triggers heightened landscaping requirements in LDC Sec. 22.7., 22.8, or 39.10, a preliminary landscaping plan shall be submitted that references the LDC requirement(s) for the affected area(s) of the site and the installation of landscaping to meet such

requirement(s). The plan may show specific species, caliper and planting height if known, or provide a schedule of landscaping to be installed if the conditional use permit request is approved.

- Cash or check made payable to the City of St. Pete Beach for the amount of the application plus mailing fees. The application fee is $500. The mailing fee can be calculated for you when you turn in your application, or you can calculate it yourself by searching for your property on the Pinellas County Property Appraiser's office website (www.pcpao.gov), clicking on radius search at the top of the page, typing in 500 feet for the radius, and multiplying the number of properties times the current stamp price plus $0.20.
- A completed Sign Posting Affidavit.
- Completed and filed lobbyist registration form(s), if relevant. Please submit these forms to the St. Pete Beach City Clerk's Office.
- Staff may request additional information, if necessary.

Applications for New Buildings, Expansions or Additions

In addition to the elements above, the following is required of all conditional use permits involving new building construction, or expansion of an existing building. This list is not comprehensive, and additional requests may be made to assess compatibility of the request with the Comprehensive Plan and Land Development Code.

- Elevations showing all sides of the building, in color, noting the following:
  - Height from grade to the top of the roof and top of the highest element of the structure, inclusive of elevator shaft overruns, antennae, mechanical equipment, covered rooftops, and similar non-habitable spaces.
  - Height from Base Flood Elevation to the top of the roof and top of the highest element of the structure.
  - For properties in the Community Redevelopment District, preliminary notation demonstrating the ability of the new building or addition to comply with the design objectives of LDC Sec. 39.7. and 39.8.
  - For properties in the Downtown Redevelopment District, preliminary notation demonstrating the ability of the new building or addition to comply with the design objectives of LDC Sec. 39.3, 39.7, and 39.8.
- When the project takes place within the Community Redevelopment District, a site plan shall be submitted noting the following. This can be depicted on the site plan required under the prior section if legible, or as a separate plan.
  - Streetscape and site design elements of LDC Sec. 39.10., 39.11., and 39.12., as well as LDC Sec 39.15. when the development abuts single-family, two-family, RU-1, or RU-2 zoned properties.
  - In addition to the preceding, any new buildings or additions within the Downtown Redevelopment District shall note compliance with the relevant elements of LDC Sec. 39.3. and 39.4. (where applicable).
- When the project is estimated to generate 51 or more peak hour trips based on the latest Institute of Transportation Engineers Parking Generation Manual or other professionally-accepted estimates, the applicant shall submit a transportation study methodology and draft transportation management plan (TMP) for review if requested by the City. Projects estimated to generate more than 300 peak hour trips are required to submit a transportation study methodology and TMP for review. Methodologies shall contain a table showing the expected traffic impact at peak hour for the new development.
- When the new building or addition exceeds 5,000 square feet, at least one rendering shall be provided showing the frontage of the building facing any public thoroughfare, and the rear of any building facing a public waterway or the beach. If the development site cannot be captured in one rendering, additional

renderings shall be required to depict the new building(s) or addition(s) within the context of the entire development site.

- When the development is in the Community Redevelopment District and proposes a new building or is undergoing major renovation, an explanation of how the development will comply with the requirements of LDC Sec. 39.9.
- When the development is a multi-building project, or one with multiple uses in the same building, a preliminary site layout plan shall be provided identifying the uses provided within each building or portion thereof.
- A preliminary sign permit package, showing any proposed new signage for the property.

Applications for New and Expanded Temporary Lodging Developments

In addition to the elements in the preceding two sections, any new or expanded temporary lodging use shall provide the following. This list is not comprehensive, and additional requests may be made to assess compatibility of the request with the Comprehensive Plan and Land Development Code.

- Demonstration of compliance with the floor area standard of LDC Sec. 6.6.
- For properties in the Community Redevelopment District, demonstration of compliance with LDC Sec. 39.6.
- For large scale redevelopment projects in the Community Redevelopment District, site plan references to required beach walks, mean high water line easements, and any other public easement proffered under the development request.
- For large scale redevelopment projects in the Community Redevelopment District that contain at least one building exceeding 50 feet, a shade study at the equinox and solstices, showing at least one morning, afternoon and evening rendering.
- A to-scale dune installation or maintenance plan, where required.

Can I ask for Variance with my Conditional Use application? It is not uncommon for projects that require conditional use approval to also seek variance approvals. The City Commission is authorized to hear both types of request at the same time. Accordingly, variance requests may be included as part of the Conditional Use request. An additional application form is included in this packet for this purpose.

Who decides if the Conditional Use should be granted? The City Commission is authorized to hear and make final determinations on all conditional use requests. Conditional use applications may also include variance requests as part of a conditional use application. In those cases, the City Commission also makes the final determination.

What is the City Commission and when do they meet? The City Commission is the elected body of officials who have overall responsibility for establishing policies and procedures for the operations of the City of St. Pete Beach. The Commission meetings are normally held two times a month on the second and fourth Tuesday at 6:00pm, in the City Commission Chambers at 155 Corey Avenue (City Hall).

What do I do after my Conditional Use is granted? You will receive a notice from the City immediately following your hearing. This notice is called a Development Order (DO) and it will summarize the results of the hearing including the decision to deny, approve, or approve with conditions. If approved, the owner/applicant will have one (1) year from the date the development order is signed to obtain a building permit for the proposed work. The permit must remain active during the life of the project. If a permit is not obtained within a year or if a permit does not remain active, the conditional use will expire.

What happens if my approved Conditional Use is appealed? Although rare, sometimes a neighbor or other affected party will appeal the Commission decision to the Circuit Court. Any such appeal must be taken within 30-days from the date of the decision. Should this occur, the City is normally removed from the appeal process and has no control over the timeframe or decision of the Court. The one-year timeframe for permit issuance noted above would begin from the Court's final decision date provided the applicant has properly advised the City of said appeal.

What can I do if my Conditional Use is not granted? You may correct your plans to meet current code requirements or you may file an appeal to the Pinellas County Circuit Court with 30-days of the final decision.

How are my application fees used? The application fee is primarily used to cover staff review costs. A conditional use application will typically involve reviews from multiple City agencies and may include County, State, or even Federal reviews depending on the nature of the request. All conditional use applications are required to be properly advertised and require notification to adjacent property owners. The mailing fees are used offset the cost incurred in meeting these requirements including the preparation of a legal ad and mailing costs associated to adjacent property owner notice. The City shall re-advertise a request, at no expense to the applicant, if a scheduled application is not heard due to an error by the City (i.e. lack of a quorum). Otherwise, the applicant will be responsible for any additional costs incurred as a result of his or her own (in)action.

CONDITIONAL USE APPLICATION

Applicants must acknowledge understanding of the following. Initial each of the statements below. If you do not understand any of these, staff will explain them to you.

DA I understand that the City will not accept or process an incomplete application.

DA I understand that a non-conforming use or structure in a particular zoning district does not, in any way, provide justification for the granting of a conditional use. Furthermore, the existence of a permitted use or structure in adjacent districts does not constitute grounds for a conditional use.

DA On all conditional uses, a majority vote is required. Action on this application by the City Commission may be continued to a later meeting.

DA I understand that if a conditional use is approved by the City Commission, the applicant is required to obtain the appropriate building permits within 1 year from the date of the decision. If no permit is obtained within 1 year, the approval from the City Commission becomes voided.

DA I understand that any person aggrieved by the final decision has the right to file a petition in the Pinellas County Circuit Court within 30 calendar days after the decision. Permits for construction may be granted prior to the expiration of this 30-day period, but an appeal will be grounds for revocation of the permit.

DA I understand that I, as the applicant, or my authorized representative must be present at all scheduled public meetings on the application.

After acknowledgement of these conditions, complete the application form on the following pages

10/06/25

Signature of Applicant Date

St. Pete Beach
The Sunset Capital of Florida

CONDITIONAL USE APPLICATION

Case Number: _____

PROPERTY OWNER: 804 PAG Way, LLC

Name: John D. Dashiell (mng. member)

Address: 2061 East Vina Del Mar Blvd.

City: SPB State: FL.

Zip: 33706 Telephone: (404) 202-8763

Email: dashiellrealty@aol.com

APPLICANT/AGENT (Attach agent authorization form)

Name: Michael Keller

Address: 3125 5th Ave N, Suite 200

City: St. Petersburg State: Florida

Zip: 33713 Telephone: 727-328-3608

Email: mkeller@frazedesign.com

SUBJECT PROPERTY:

Address: 804 Pass A Grille Way Current Name of Business: N/A

Parcel ID: 19-32-16-58932-005-0030 Name of Project: _____

DETAILS OF THE REQUEST, INCLUDING APPLICABLE CODE SECTIONS AND ANY ASSOCIATED CASES (Add additional sheets if necessary):

Request approval for an exterior balcony of 500 s.f. for exterior dining on the 2nd level of the 3 story restaurant. In additon there is also 640 s.f. of extrior seating on the 3rd level.

Mike Keller
Signature of Applicant/Agent

10/06/25
Date

St. Pete Beach

The Sunset Capital of Florida

Owner's Authorization for Agent

I/WE 804 PAG Way, LLC / John D. Dashiell (mng. member)
(print name of property owner)

hereby authorize Michael Keller Mike Keller
(print name of agent)

to represent me/us in an application for Conditional Use
(type of application: variance, conditional use, zoning, etc.)

Signature of Owner

Seh
Signature of Owner

JOHN DASHIELL
Print Name of Owner

Seh
Print Name of Owner

The forgoing instrument was acknowledged before me this 3rd **day of** October **20**25**, by** ____ JOHN DASHIELL **who is personally known** _____ **or produced** FL Driver License **as identification.**

10/3/25

(Notary Signature) **(Date)**

My Commission Expires 02/03/29

Notary Public State of Florida
Sarah E Hubbert
My Commission HH 636167
Expires 2/3/2029

St. Pete Beach
The Sunset Capital of Florida

PUBLIC HEARING SIGN POSTING AFFIDAVIT

Applicant, JOHN DASHIELL, agrees to post the sign(s) in a conspicuous place, at the principal access to the property, in full view of the public, and not more than five (5) feet from the nearest street right of way or easement a minimum of seven (7) days in advance of the Public Hearing and remain in place until the requested action has been heard and decided. Multiple sign postings shall not be more than three hundred (300) feet apart. If the subject parcel(s) abut more than one (1) street, notices shall be posted along each street. When the subject parcel(s) does not front a public road, the sign shall be posted at the point on a public road by which the property is, or can be, reached.

The sign shall be maintained in good readable condition by the applicant. If the said sign is destroyed, lost, or becomes unreadable, the applicant or applicant's representative shall obtain a replacement sign. Any sign posted in accordance with these requirements shall be removed from the property and disposed of by the applicant or applicant's agent not later than 24 hours following the final decision.

Applicant/Agent (must fill out agent authorization form):

Name(print): 804 PAG Way, LLC / John D. Dashiell (mng. member)

Address: 2061 East Vina Del Mar Blvd SPB, FL 33706

Signature _____ Date 10/3/25

STATE OF FLORIDA)
) SS:
PINELLAS COUNTY)

The foregoing instrument was acknowledged before me this 3rd day of October 20 25 by John Dashiell, who appeared before me, and is personally known to me, or has produced FL Driver License as identification, and did take an oath.

My commission expires: 02/03/29

NOTARY: _____

Print Name: SARAH E HUBBERT

Notary Public, State of Florida

(Notarial Seal)

Notary Public State of Florida
Sarah E Hubbert
My Commission HH 636167
Expires 2/3/2029

CITY OF ST. PETE BEACH, Community Development Department
155 Corey Avenue, St. Pete. Beach, Florida 33706, 727-367-2735 www.stpetebeach.org

In order for an application for a conditional use to be approved or approved with conditions, the City Commission must make a positive finding with regard to each of the provisions below, pursuant to Division 4 of the City's Land Development (LDC). The applicant has the burden of proof demonstrating that the application for the conditional use complies with each of the requirements. Please explain in detail how your case meets these requirements (attach additional sheets if necessary):

1. LDC Sec 4.4(a)(1) Whether the conditional use is consistent with the goals, objectives, and policies of the Comprehensive Plan and any adopted special area plan.

   The propsed 3-story restaurant and exterior balconies meet all goals, objectives, and policies of the Comprehensive Plan. There are not any residential properties within a city block of this proposed restaurant. Water faces the front of the building across the street. The hours of operation are proposed to be from 11am to 10pm. There will be no band or live music on the proposed balconies.

2. LDC Sec 4.4(a)(2)a-d Whether the proposed use will be compatible with the character of the existing area, including existing structures and structures under construction, existing public facilities and public facilities under construction, and residential commercial and/or service facilities available within the existing area. More specifically:

   a. Whether the overall appearance and function of the area will be significantly affected. consideration shall be given to the existence of other uses in the area, based on the number, size, and location of the uses and the intensity and scale of the proposed and existing uses in the area;

      The new proposed restaurant complies with all funstion of the DIVISION 40 COMMUNITY REDEVELOPMENT DISTRICT—EIGHTH AVENUE (CRD-EA) district.

   b. Whether the application will preserve any city, state, or federally designated historic,scenic, archaeological, or cultural resources (check with Community Development to determine historic resource status);

   The propsed 3-story restaurant and exterior balconies meet all goals, objectives, and policies of the Comprehensive Plan. There are not any residential properties within a city block of this proposed restaurant. Water faces the front of the building across the street. The hours of operation are proposed to be from 11am to 10pm. There will be no band or live music on the proposed balconies.

c. Whether the application will be compatible with adjacent development, if any, based on characteristics such as size, building style and scale, or whether such incompatibilities are mitigated through such means as screening, landscaping, setbacks, and other design features;

The proposed 3-story restaurant is compatible with all adjacent developments.Rendering and floor plans are provided as part of this package. All ground level accessory items like coolers and dumpster will be screened from PASS- A- GRILLE WAY. Landscaping will be provided and setbacks will be met. The nearest neighbor on south is approximately 316 feet and on north is approximately 328 feet.

d. Whether the application will have significant adverse impacts on the livability and usability of nearby land due to noise, dust, fumes, smoke, glare from lights, late-night operations, odors, vehicular traffic, truck and other delivery trips, the amount, location, and nature of any outside activities, potential for increased litter, or privacy and safety issues;

The propsed 3-story restaurant and exterior balconies meet all goals, objectives, and policies of the Comprehensive Plan. There are not any residential properties within a city block of this proposed restaurant. Water faces the front of the building across the street. The hours of operation are proposed to be from 11am to 10pm. There will be no band or live music on the proposed balconies.

3. Whether the transportation system is capable of adequately supporting the proposed use in addition to the existing uses in the area. Evaluation factors include street capacity and level of service, access to arterials, transit availability, on-street parking impacts, if any, site access requirements, neighborhood impacts, and pedestrian safety (a traffic study may be required);

Per a meeting with city building department and all entities, it was determined that the transportation system is capable of supporting this structure.

4. Whether the minimum off-street parking area required and the amount of space needed for the loading and unloading of trucks, if applicable, will be provided and will function properly and safely (please provide current and proposed number of parking and loading spaces);

The new proposed 3- story restaurant will have a loading area at the rear of the building off of the existing alley and will be appropriately sized for the delivery truck to unload in.

5. Whether generally, the public health, safety and welfare will be preserved, and any reasonable conditions necessary for such preservation have been made;

The public health, safety, and welfare will be preserved.

6. Whether the applicant has demonstrated the financial and technical capacity to complete any improvements and mitigation necessitated by the development as proposed and has made adequate legal provision to guarantee the provision of such improvements and mitigation; and,

The owner of the land has been involved in all meetings with the city and is aware of all things the city is requesting of him.

7. The proposed use complies with all additional standards imposed on it by the particular provision of these regulations authorizing such use and by all other applicable requirements of the regulations of the City of St. Pete Beach.

Sec. 4.12 of the Land Development Code additionally requires conditional use applications within the community redevelopment district to be evaluated upon the extent to which the applicant can demonstrate that the following issues are addressed in a manner consistent with the policies established in the community redevelopment plan for the district and that no unreasonable or disproportionately negative impacts are imposed upon adjacent or nearby properties:

1. Utility infrastructure, including sanitary sewer, reclaimed water, potable water, electric and natural gas services, and data transmission and telecommunication services.

2. Transportation infrastructure, including ingress and egress from public right-of-way, traffic control devices and signalization, internal vehicle circulation of the site, design and function of parking areas, loading and unloading areas, pedestrian transit infrastructure and amenities, and public sidewalks and roadways.

3. Hydrological features and storm water management infrastructure.

4. Aesthetic and architectural features of the development, including site layout, physical dimensions of structures such as height and massing, design and appearance of building facades, exterior building materials, advertising and directional signage and the provision and maintenance of Gulf and Bay views and vistas.

5. Site landscaping, open space provision and impervious surface limitations.

6. Operational and functional requirements of facilities, including hours of operation, provision of required services or amenities, lighting requirements, noise abatement requirements, residency limitations and facilities maintenance.

7. Fire suppression and facility security.

8. Emergency management and hurricane evacuation provisions.

9. For temporary lodging uses taller than 50 feet in height or a density greater than 30 units per acre, the following additional issues shall be considered:

    a. The amount of separation provided between the proposed temporary lodging use and any existing buildings on adjoining properties and resulting impact on sunlight and views; and
    b. The proximity of any adjacent residential building to the Florida Coastal Construction Control Line and the degree to which the proposed temporary lodging use and/or any accessory use or structure maintains an open view of the waterfront from neighboring properties.

Technical Review Committee Deadlines

The TRC generally meets the 1st and 3rd Wednesday of each month at 10:00am in the Community Development Department conference room. All conditional use permit applications must be reviewed by the Technical Review Committee.

Meeting Month	Application Deadline	Meeting Date
	30 days prior to meeting date	At 10:00am in the TRC room
		Wednesday
January	12/9/2024	1/8/2025
	12/23/2024	1/22/2025
February	1/6/2025	2/5/2025
	1/20/2025	2/19/2025
March	2/3/2025	3/5/2025
	2/17/2025	3/19/2025
April	3/3/2025	4/2/2025
	3/17/2025	4/16/2025
May	4/7/2025	5/7/2025
	4/21/2025	5/21/2025
June	5/5/2025	6/4/2025
	5/19/2025	6/18/2025
July	6/2/2025	7/2/2025
	6/16/2025	7/16/2025
August	7/7/2025	8/6/2025
	7/21/2025	8/20/2025
September	8/4/2025	9/3/2025
	8/18/2025	9/17/2025
October	9/1/2025	10/1/2025
	9/15/2025	10/15/2025
November	10/6/2025	11/5/2025
	10/20/2025	11/19/2025
December	11/3/2025	12/3/2025
	11/17/2025	12/17/2025

DEAR APPLICANT:

PLEASE COMPLETE THE ATTACHED AFFIDAVIT WHEN PUBLIC HEARING DATES HAVE BEEN DETERMINED FOR YOUR APPLICATION. PRESENT THE COMPLETED NOTARIZED AFFIDAVIT TO COMMUNITY DEVELOPMENT AND YOU WILL BE GIVEN THE SIGN(S) TO POST ON THE SUBJECT PROPERTY.

It is your responsibility to post the sign(s) in a conspicuous place, at the principal access to the property, in full view of the public, and not more than five (5) feet from the nearest street right of way or easement a minimum of seven (7) days in advance of the public hearing. The sign(s) must remain in place until the requested action has been heard and decided by the City Commission, Planning Board, Board of Adjustment, Historic Preservation Board or withdrawn. Multiple sign postings cannot be more than three hundred (300) feet apart. If the subject parcel(s) abut more than one (1) street, notices shall be posted along each street. When the subject parcel(s) does not front a public road, the sign shall be posted at the point on a public road by which the property is, or can be, reached.

You must maintain the sign(s) in good readable condition. If the said sign is destroyed, lost, or becomes unreadable, you or your representative shall obtain a replacement sign. Any sign posted in accordance with these requirements shall be removed from the property and disposed of by the applicant or applicant's representative not later than 24 hours following the final decision by the City Commission, Planning Board, Board of Adjustment, or Historic Preservation Board.

A Notary Public is available in City Hall; 155 Corey Avenue.

ANNUAL LOBBYIST REGISTRATION

FOR THE PERIOD JANUARY 1, ____ THRU DECEMBER 31, _____

Name _____ Phone _____ Email _____

Mailing Address _____

NAMES OF INDIVIDUAL LOBBYISTS (attach additional sheets if necessary):

1) Name _____
2) Name _____
3) Name _____
4) Name _____

Business Relationships: Does the Lobbying Firm or any of the Lobbyists listed above have any direct business association or partnership with any current member of the City Commission, City employee, or person sitting on a decision-making body (mark one)?

☐Yes ☐No

If "yes", attach documentation explaining the nature of each business relationship.

List any local campaign contributions and the amount(s):

_____

_____

LIST THE NAME AND BUSINESS ADDRESS OF EACH PRINCIPAL REPRESENTED, THEIR GENERAL AND SPECIFIC AREAS OF LEGISLATIVE INTEREST, AND THEIR POSITION ON SUCH AREA OF INTEREST.

(1) Name _____

Address _____

General Area of Legislative Interest: _____

Specific Area of Legislative Interest: _____

Position on Area of Interest: _____

(2) Name _____

Address _____

General Area of Legislative Interest: _____

Specific Area of Legislative Interest: _____

Position on Area of Interest: _____

(3) Name _____

Address _____

General Area of Legislative Interest: _____

Specific Area of Legislative Interest: _____

Position on Area of Interest: _____

(4) Name _____

Address _____

General Area of Legislative Interest: _____

Specific Area of Legislative Interest: _____

Position on Area of Interest: _____

(USE ADDITIONAL PAGES IF NECESSARY)

Be advised:

1) Completed forms may be scanned and emailed to cityclerk@stpetebeach.org, hand delivered, or mailed to the address below. For those submitting electronically, **registration does not become effective until all fees have been paid and the form has been reviewed and approved by staff.** Staff review will verify all required information has been provided and an effective date will be communicated to registrant.
2) This registration expires at 11:59 p.m. on December 31st. A new registration must be filed each year.
3) The registration fee is $50.00, in compliance with the City's Code of Ordinances.
4) A revised registration may be submitted throughout the year to add or remove principals and/or individual lobbyists. No charge is required to amend a registration throughout the year. If the general or specific area of legislative interest changes, written notification shall be filed with the City Clerk reflecting such amendments, and such notification shall be made prior to lobbying on any new subject.

By submission of this form, you are attesting that the firm and lobbyist(s) listed above have been retained to represent each principal listed above.

OATH

Under penalties of perjury, I declare that I have read the foregoing document and that facts stated in it are true.

_____	_____	_____	_____
Signature	Printed Name	Title	Date

Submit form with registration fee made payable to the City of St. Pete Beach.
Scanned forms may be emailed to cityclerk@stpetebeach.org
Notice: **Cash or Check ONLY**. Credit/Debit cards are not accepted.

City of St. Pete Beach
City Clerk's Office
Attn: City Clerk
155 Corey Avenue
Ste. Pete Beach, FL 33706

Registration Fee Paid and Form Accepted: _____
Staff Initial

GENERAL AND SPECIFIC AREAS OF LEGISLATIVE INTEREST

When completing the registration form, registrants shall provide a response for both the "General" and "Specific" area of legislative interest, as required by City Code. Registrants are required to disclose both the "General" and "Specific" areas of legislative interest with sufficient specificity to permit a reasonable individual to clearly associate a lobbyist's activities to an issue disclosed on the lobbyist's registration form(s). If a lobbyist is representing a client on multiple issues, each issue must be disclosed separately, and the general & specific nature of each issue must be disclosed in such a manner to permit clear identification of each issue separate and apart from other issues listed on the registration forms. If necessary, the registrant should attach additional pages to their registration forms to clearly disclose all information required by the Lobbyist's Registration Ordinance.

Issue and Position

It is important to note that lobbyists are required to disclose their principal's position on an issue. In other words, lobbyists are required to state whether their principal is seeking the passage, defeat, withdrawal, etc. The registration form requires that the area of legislative interest and the position be sufficiently disclosed.

Registrations must also be updated timely to disclose any new/additional issues for which the lobbyist has been retained; registration forms must be updated prior to lobbying activities commencing.

Sufficient Disclosure

When lobbying on issues pertaining to a specific ordinance, resolution, planning department action, etc., the registrant shall refer to the specific identifier associated with the issue – i.e. ordinance no., resolution no., permit no., or other City-issued identifier associated with the subject matter. In most cases, this identifier, along with the issue's official City title, constitutes the "Specific' area of legislative interest.

On issues which lack a City issued identifier, the registrant must identify the issue with sufficient specificity to give public notice of the particular issue or proposal that is a subject of any communication that constitutes lobbying. This may be accomplished by identifying a specific property (street address or parcel ID) or by identifying a specific agenda item (meeting date, item no., title). For issues relative to real property, the "Specific" disclosure should clearly identify the exact location of the real estate.

With regards to the City budget, it is likely necessary to disclose a specific appropriation, funding topic, program, City department, or other unique element that pertains to the lobbying activities. Merely disclosing that lobbing activities pertain to "the budget" is too vague and, therefore, would constitute an insufficient disclosure.

Upon request, staff of the Clerk's Office will provide advice to registrants with regards to the "General" and "Specific" responses. Please contact our office if guidance is needed.

Ordinance 2022-04

AN ORDINANCE OF THE CITY OF ST. PETE BEACH, FLORIDA AMENDING THE CODE OF ORDINANCES, CHAPTER 2 – ADMINISTRATION, ARTICLE II - OFFICERS AND EMPLOYEES, DIVISION 2 - CODE OF ETHICS, ESTABLISHING SECTION 2-68 - DEFINITIONS; SECTION 2-69 - REGISTRATION OF LOBBYISTS; SECTION 2-70 – VALIDITY OF ACTION; SECTION 2-71 – RECORD KEEPING RESPONSIBILITIES; SECTION 2-72 – MAINTAINING REGISTRATIONS AND CONTACT LOGS; SECTION 2-73 – PROHIBITED CONDUCT OF CITY OFFICIALS AND EMPLOYEES; SECTION 2-74 – COMPLIANCE; PENALTIES, AND RESERVING SECTIONS 2-75 – 2-95; PROVIDING FOR CODIFICATION; CONFLICTS; SEVERABILITY; CORRECTION OF SCRIVENER'S ERROR; CONSTRUCTION; PUBLICATION; AND AN EFFECTIVE DATE.

WHEREAS, the City Commission of the City of St. Pete Beach wishes to establish registration and regulations for lobbying and lobbyists within the City.

WHEREAS, the Code of Ordinances Chapter 2, Article II, Division 2 "Code of Ethics" does not currently include any specific regulations related to lobbyists.

WHEREAS, the City Commission desires to establish a system to track lobbying activities to allow for greater transparency in City business.

WHEREAS, persons appearing before the City Commission, City staff, City boards, and City Committees benefit from having Lobbyist registration requirements that are consistent and uniform.

WHEREAS, the City Commission finds it in the best interest of its citizens to preserve and maintain the integrity of the members of the City Commission, board, committee and City employees.

NOW, THEREFORE, THE CITY COMMISSION OF THE CITY OF ST. PETE BEACH FLORIDA, HEREBY ORDAINS:

SECTION 1. Recitals. The above recitals ("Whereas" clauses) are hereby adopted as legislative findings, purpose and intent of the City Commission.

SECTION 2.

Chapter 2, Article II, Division 2 shall be amended as follows:

Sec. 2-68 – Definitions.

The following terms will be defined for this Section:

Lobbying –means communications, whether written or oral, by a lobbyist outside a duly noticed public meeting or hearing on the record with any member or members of the City Commission, or any member or members of any decision making body under the jurisdiction of the City Commission, or any City employee, whereby the lobbyist seeks to encourage or influence the passage, defeat, modification or repeal of any item which may be presented for vote before the City Commission, or any decision-making body under the jurisdiction of the City Commission, or which may be presented for consideration by a City employee as a recommendation to the City Commission or decision-making body.

Lobbyist – means all persons employed or retained, whether paid or not, by a principal who seeks to encourage the passage, defeat or modification of any ordinance, resolution, action or decision of any City Commissioner; any action, decision, recommendation of the City manager or any City boardor committee; or any action, decision or recommendation of any City personnel defined in any manner in this section, during the time period of the entire decision-making process on such action,decision or recommendation that foreseeably will be heard or reviewed by the City Commission, or a City board or committee. The term specifically includes the principal as well as any employee engaged in lobbying activities. The term "lobbyist" specifically excludes the following persons:

> i) Expert witnesses who provide only scientific, technical or other specialized information or testimony in public meetings; ii) any person who only appears as a representative of a neighborhood association without compensation or reimbursement for the appearance, whether direct, indirect or contingent, to express support of or opposition to any item; and iii) any person who only appears as a representative of a not-for-profit community based organization for the purpose of requesting a grant without special compensation or reimbursement for the appearance.

The persons specifically excluded above from the definition of "lobbyist" shall, prior to communicating with City personnel, disclose in writing to the City clerk, their name, address, and principal on whose behalf they are communicating.

Lobbying firm – means a business entity, including an individual contract lobbyist, that receives or becomes entitled to receive any compensation or the purpose of lobbying, where any partner, owner, officer, or employee of the business entity is a lobbyist.

Principal – means a person, firm, corporation, or other legal entity which has employed or retained a lobbyist.

Employee – means all persons employed directly or indirectly by the City of St. Pete Beach.

Decision-making body – means any board or committee established by the City Commission, City Manager and/or committee appointed by the City Manager.

Sec. 2-69 – Registration of lobbyists.

All lobbyists, as defined herein, shall register with the City Clerk on an annual basis, January 1 each year, including the payment of a $50.00 fee, or as amended in Appendix A in the City's Code of Ordinances, prior to engaging in any lobbying. Registration shall be updated to add or withdraw principals and/or individual lobbyists before a lobbyist commences lobbying on behalf of any new principal. If the general or specific area of legislative interest changes, written notification shall be filed with the City Clerk reflecting such amendments, and such notification shall be made prior to lobbying on any new subject.

Each lobbyist shall be required to register on forms prepared by the City Clerk. The lobbyist shall state under oath his or her name, business address, the name and business address of each principal represented, that the principal has actually retained the lobbyist, the general and specific areas of legislative interest, position on such legislative interest, and the nature and extent of any direct business association or partnership with any current member of the City Commission, City employee, or person sitting on a decision-making body. Each lobbying firm may register in the name of such firm, corporation, or legal entity, provided the registration shall list the names of all persons who engage in lobbying as defined in this article. Failure to register, or providing false information in the lobbyist registration form, shall constitute a violation of this Ordinance.

Sec. 2-70 – Validity of action.

The validity of any decision, action, recommendation, or determination made by the City Commission, board, committee, or employee shall not be affected by the failure of any person to comply with the provisions of this Ordinance.

All members of the City Commission, boards, committees, and City employees shall be diligent to ascertain that a person required to register pursuant to this Ordinance have complied, and if necessary, request a record of compliance from the City Clerk.

Sec. 2-71 – Record keeping responsibilities.

City Commissioners, board members, committee members, and City employees, as defined in this Section shall be responsible for maintaining a written log, in the form established by the City Clerk, which documents each oral lobbying communication or meeting. The written log shall be on a form as prepared by the City Clerk. The log shall, at a minimum, reflect the name of the lobbyist, the date of the contact, whether telephone or in person oral contact, and the subject matter discussed.

City Commissioners, board members, committee members, and City employees shall deliver their logs to the City Clerk's Office at the end of each quarter and at the conclusion of their final term in office. City employees must deliver their logs to the City Clerk at the end of

each quarter and upon the conclusion of their employment with the City.

Sec. 2-72 – Maintaining registrations and contact logs.

The City Clerk shall accept and maintain the annual lobbyist registrations and the quarterly log of lobbyist contacts, which shall be open for public inspection.

Sec. 2-73 – Prohibited conduct of city officials and employees.

No member of the City Commission, board, committee or employee of the City shall solicit or accept as compensation, payment, favor, service, or thing of value from a lobbyist or principal when such member of the City Commission, board, committee or employee knows, or with the exercise of reasonable care, should know, that it was given to influence a vote or recommendation favorable to the lobbyist or principal.

No member of the City Commission or employee of the City shall appear before the City Commission for compensation for two years from the date he or she leaves the City Commission or City employment.

Sec. 2-74 – Compliance; penalties.

The City Clerk shall monitor lobbyists for compliance with this section and shall develop procedures for suspension of lobbyists until compliance is attained. The City Clerk will alert the City Commission to any instances of non-compliance and will inform the City Commission of any need to institute progressive penalties for repeat offenders.

The penalties for an intentional violation of this Ordinance more than once in a twelve-month period are as follows:

1) Second violation shall result in prohibition from lobbying for one year; and
2) Third violation shall result in prohibition from lobbying for two years.

Sec. 2-75 – Sec. 2-95 – Reserved.

SECTION 3. Codification. This Ordinance shall be codified in the Code of Ordinance of the City of St. Pete Beach.

SECTION 4. Conflicts. All ordinances or parts of ordinances, in conflict herewith are hereby repealed to the extent of any conflict with the Ordinance.

SECTION 5. Severability. The provisions of this Ordinance are declared to be severable, and if any section, sentence, clause or phrase of this Ordinance shall for any reason be held to be invalid or unconstitutional, such decision shall not affect the validity of the remaining sections, sentences, clauses, and phrases of this Ordinance as they shall remain in effect, it being the legislative intent that this Ordinance shall stand notwithstanding the invalidity of any part.

SECTION 6. Scrivener's Error. The City Attorney may correct scrivener's errors found in this Ordinance by filing a corrected copy of this Ordinance with the City Clerk.

SECTION 7. Construction. This Ordinance is to be liberally construed to accomplish its objectives.

SECTION 8. Publication. This Ordinance shall be published in accordance with the requirements of law.

SECTION 9. Effective Date. This ordinance shall take effect on September 1, 2022.

FIRST READING:	**January 25, 2022**
PUBLIC HEARING:	**February 22, 2022**
PUBLISHED:	**February 9, 2022**
SECOND READING:	**February 22, 2022**

CITY COMMISSION, CITY OF ST. PETE BEACH, FLORIDA.

Alan Johnson, Mayor

I, Amber LaRowe, City Clerk of the City of St. Pete Beach, Florida, do hereby certify that the foregoing Ordinance was duly adopted in accordance with the provisions of applicable law this 22 day of February, 2022.

Amber LaRowe, City Clerk

APPROVED AS TO FORM AND LEGAL SUFFICIENCY:

Andrew Dickman, City Attorney

SECTION 19, TOWNSHIP 32 SOUTH, RANGE 16 EAST, PINELLAS COUNTY, FLORIDA.

BOUNDARY SURVEY

LEGAL DESCRIPTION:
LOT 3, BLOCK 5, MOREY BEACH, ACCORDING TO THE PLAT THEREOF, AS RECORDED IN PLAT BOOK 1, PAGE 102, OF THE PUBLIC RECORDS OF HILLSBOROUGH COUNTY, FLORIDA, OF WHICH PINELLAS COUNTY WAS FORMERLY A PART.

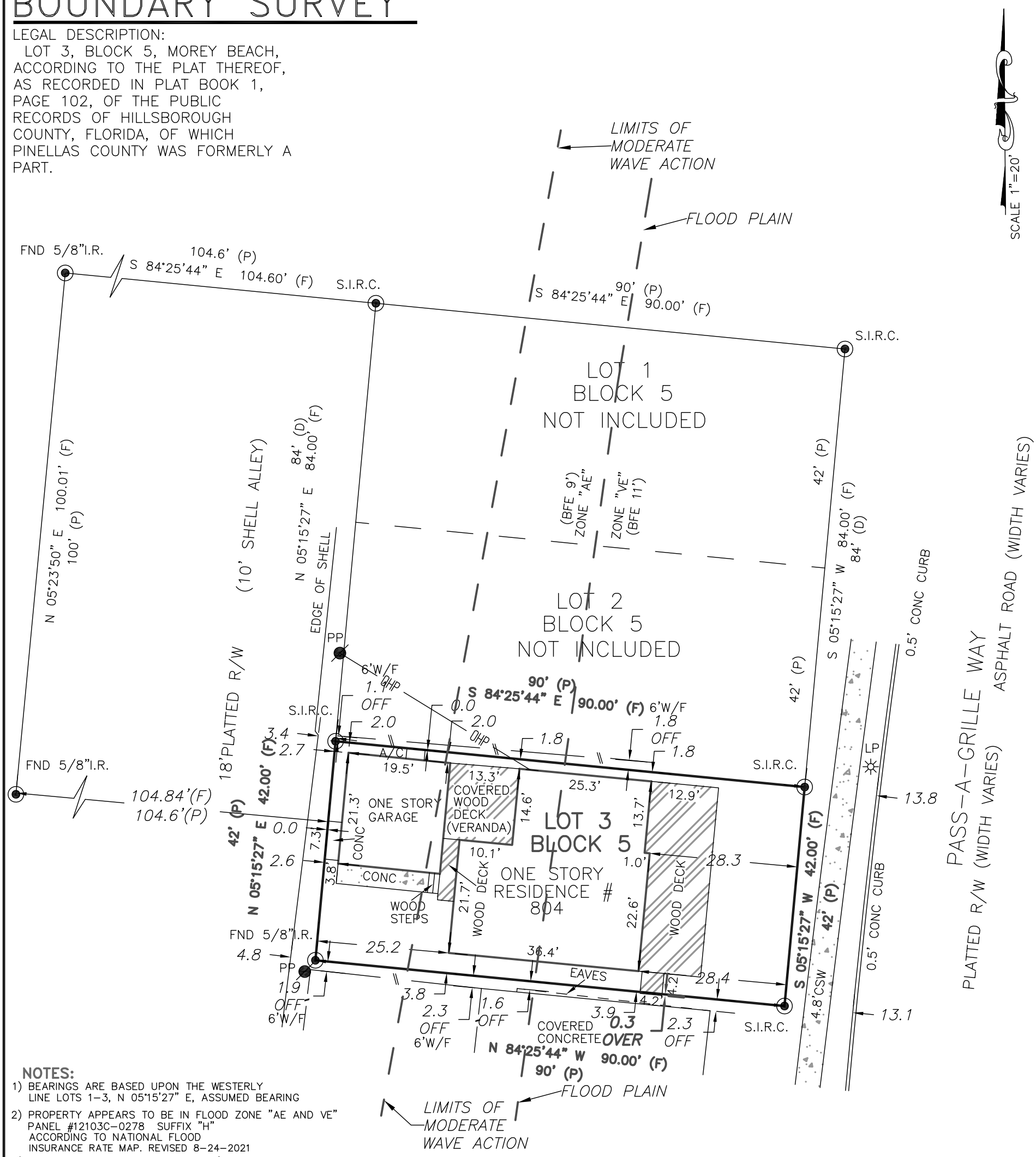

NOTES:

1) BEARINGS ARE BASED UPON THE WESTERLY LINE LOTS 1–3, N 05°15'27" E, ASSUMED BEARING
2) PROPERTY APPEARS TO BE IN FLOOD ZONE "AE AND VE" PANEL #12103C–0278 SUFFIX "H" ACCORDING TO NATIONAL FLOOD INSURANCE RATE MAP. REVISED 8–24–2021
3) ELEVATIONS ARE BASED ON NAVD '88 DATUM
4) ALL MEASUREMENTS ARE IN U.S. FEET
5) THIS SURVEY WAS CONDUCTED WITHOUT THE BENEFIT OF AN ABSTRACT OF TITLE, THEREFORE, THERE MAY BE OTHER EASEMENTS, RIGHT–OF–WAY, SETBACK LINES, AGREEMENTS, RESERVATIONS, OR OTHER SIMILAR MATTERS OF PUBLIC RECORD, NOT DEPICTED ON THIS SURVEY
6) FENCE LOCATION DOES NOT DETERMINE OWNERSHIP, OFF MEANS THE FENCE IS OFF OF THE PROPERTY, IN MEANS FENCE IS INSIDE THE PROPERTY.

WOOD DECK CROSSES OVER THE BOUNDARY LINE AS SHOWN

Certificate of Authorization "LB #6945"

LEGEND:

A/C = AIR CONDITIONER
(C)=CALCULATED
CLF=CHAIN LINK FENCE
C.M. = CONCRETE MONUMENT
CONC = CONCRETE
CSW = CONCRETE SIDEWALK
(D) = DEED MEASUREMENT
(F) = FIELD MEASURED
NO. I.D.= NO IDENTIFICATION
PRM = PERMANENT REFERENCE MONUMENT
PSM = PROFESSIONAL SURVEYOR AND MAPPER
RLS/PLS = REGISTERED/PROFESSIONAL LAND SURVEYOR
PVC= PLASTIC VINYL FENCE
PCP = PERMANENT CONTROL POINT
I.P. = IRON PIPE
I.R. = IRON ROD
LB = LICENSED BUSINESS
O.U. = OVER HEAD UTILITY
P.K. = PARKER KRYLON
(P) = PLAT
PP = POWER POLE
R/W = RIGHT–OF–WAY
ASPH = ASPHALT
(R)= RADIAL
FHD = FIRE HYDRANT
FND = FOUND
(N/R) = NON–RADIAL
(TYP)= TYPICAL
W/F =WOOD FENCE
S.P.K.D. = SET P.K. NAIL & DISK LB#6945
S.I.R.C. = SET 5/8" I.R. & CAP LB#6945

CERTIFIED TO:
804 PAG WAY LLC

MARK A. JOHNSON
PROFESSIONAL SURVEYOR AND MAPPER
FLORIDA REGISTRATION NUMBER 6572
NOT VALID WITHOUT THE ELECTRONIC SIGNATURE AND SEAL OF A FLORIDA LICENSED SURVEYOR AND MAPPER

MARK A. JOHNSON
License Number 6572
STATE OF FLORIDA
Professional Surveyor and Mapper

CERTIFICATION

I HEREBY CERTIFY THAT THIS SURVEY WAS MADE UNDER MY RESPONSIBLE CHARGE AND MEETS THE FLORIDA STANDARDS OF PRACTICE AS SET FORTH BY THE BOARD OF PROFESSIONAL LAND SURVEYORS. THE SEAL AND UNIQUE SIGNATURE APPEARING ON THIS DOCUMENT IS AUTHORIZED BY MARK A. JOHNSON PSM 6572 AND IS COMPLIANT WITH F.S.61G17–7.0025(3) (a) (b) (c) (d)

FIELD WORK BY:	JOSH	DATE: 12–7–2024	F.B. / PG. 3 / 31
DRAFTED BY:	B.P.	DATE: 12–9–2024	JOB # 24–1192

DON WILLIAMSON & ASSOCIATES, INC.
PROFESSIONAL SURVEYORS & MAPPERS LB # 6945
5020 GUNN HIGHWAY SUITE 220 A
TAMPA, FL 33624
(813) 265–4795
FAX (813) 264–6062
WAISURVEYING@GMAIL.COM

East Elevation | Scale: NTS

804 PAG WAY

10-09-2025

FRAZE design commercial residential architecture

South Elevation | Scale: NTS

804 PAG WAY

09-02-2025

FRAZE design commercial residential architecture

West Elevation | Scale: NTS

804 PAG WAY

10-09-2025

FRAZE design commercial residential architecture

North Elevation | Scale: NTS

804 PAG WAY

09-02-2025

FRAZE design commercial residential architecture

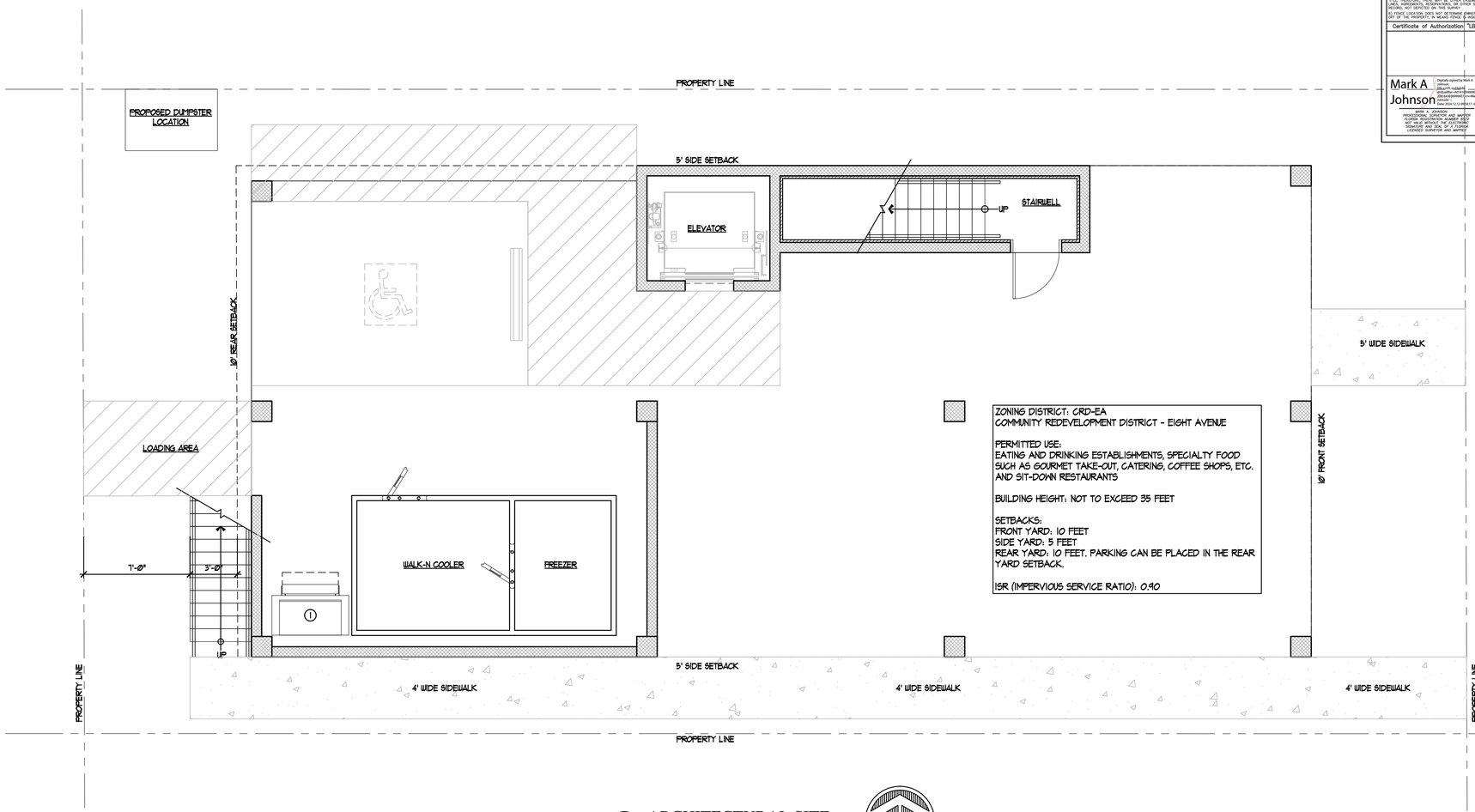

ZONING DISTRICT: CRD-EA
COMMUNITY REDEVELOPMENT DISTRICT - EIGHT AVENUE

PERMITTED USE:
EATING AND DRINKING ESTABLISHMENTS, SPECIALTY FOOD SUCH AS GOURMET TAKE-OUT, CATERING, COFFEE SHOPS, ETC. AND SIT-DOWN RESTAURANTS

BUILDING HEIGHT: NOT TO EXCEED 35 FEET

SETBACKS:
FRONT YARD: 10 FEET
SIDE YARD: 5 FEET
REAR YARD: 10 FEET. PARKING CAN BE PLACED IN THE REAR YARD SETBACK.

ISR (IMPERVIOUS SERVICE RATIO): 0.90

1 ARCHITECTURAL SITE
SCALE: 1/4" = 1'-0"

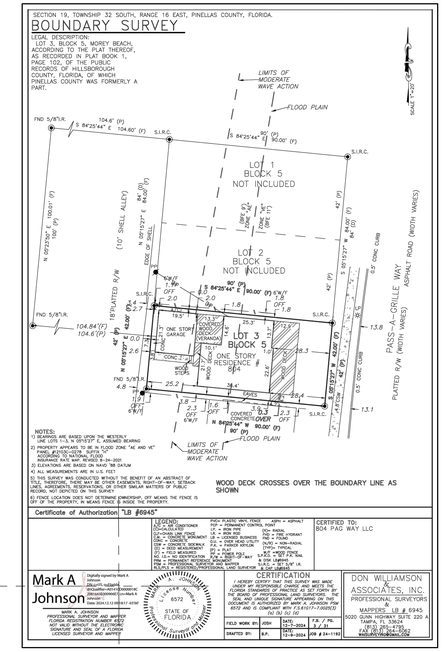

ISSUE	DATE	BY:
REVIEW	09/02/25	MK/BP
PERMIT	09/02/25	MK/BP
REV.		
REV.		
REV.		
REV.		
REV.		
REV.		
REV.		

MEMBER OF AIA American Institute of Architects

FD# 25101.00

Construction Documents for:

804 PAG WAY
804 PASS-A-GRILLE WAY
ST. PETE BEACH, FLORIDA

PROFESSIONAL SEAL

STATE OF FLORIDA · ORA FRANKLIN FRAZE IV · AR0014705 · REGISTERED ARCHITECT

ORA FRANKLIN FRAZE, IV

FRAZE design
commercial residential architecture
FL. LIC. NO. AA26000585
3125 5th AVENUE N. SUITE 200 ST. PETERSBURG, FLORIDA 33713
PHONE: 727/328-3608 FAX: 727/328-3609 STUDIO: 727/328-3608
E-MAIL: fd@frazedesign.com

COPYRIGHT 2025 FRAZE DESIGN, INC. - FRANK FRAZE AIA NCARB

THESE DOCUMENTS, DESIGNS, NOTES, DETAILS AND SPECIFICATIONS AND CONCEPTS ARE THE SOLE PROPERTY OF FRAZE DESIGN, INC. AND SHALL NOT BE REPRODUCED, RE-USED OR COPIED FOR OTHER PROJECTS, IN WHOLE OR PART WITHOUT THE WRITTEN CONSENT OF FRANK FRAZE, ARCHITECT, AIA.

ALL RIGHTS ARE RESERVED BY THE ARCHITECT IN ACCORDANCE WITH U.S. COPYRIGHT AND PATENT LAWS. UNAUTHORIZED REPRODUCTION WILL BE PROSECUTED TO THE FULL EXTENT OF THE LAW.

* THE DRAWINGS & DESIGN ARE VALID FOR 12 MONTHS FROM DATE OF BEING SEALED.

TO THE BEST OF THE ARCHITECT OR ENGINEER'S KNOWLEDGE AND BELIEF, THESE PLANS AND SPECIFICATIONS COMPLY WITH THE 8TH EDITION 2023 FLORIDA BUILDING CODE. IN ADDITION TO ANY OTHER APPLICABLE BUILDING CODES AND MINIMUM FIRE SAFETY STANDARDS

ALL DIMENSIONS AND JOB CONDITIONS SHALL BE VERIFIED BY THE CONTRACTOR, ANY AND ALL DISCREPANCIES SHALL BE REPORTED TO THE ARCHITECT PRIOR TO COMMENCEMENT OF CONSTRUCTION.

SHEET TITLE
ARCHITECTURAL SITE PLAN

SHEET NUMBER
A-2

WALL LEGEND:

- METAL STUD WALL
- MASONRY WALL
- MASONRY WALL - 1 HR RATED

ELEVATOR NOTE:

- THE ELEVATOR IN THIS BUILDING WILL COMPLY WITH CHAPTER 30 OF THE 2023 FBC, 8TH EDITION AND SECTION 407 OF THE FLORIDA ACCESSIBILITY CODE.
- ELEVATOR TO MEET REQUIREMENTS OF NFPA 101 2018 EDITION, SECTION 7.5.4 ACCESSIBLE MEANS OF EGRESS
- ELEVATOR INSPECTION COMPLIES WITH FEMA TECHNICAL BULLETIN 4/ NOVEMBER 2000.

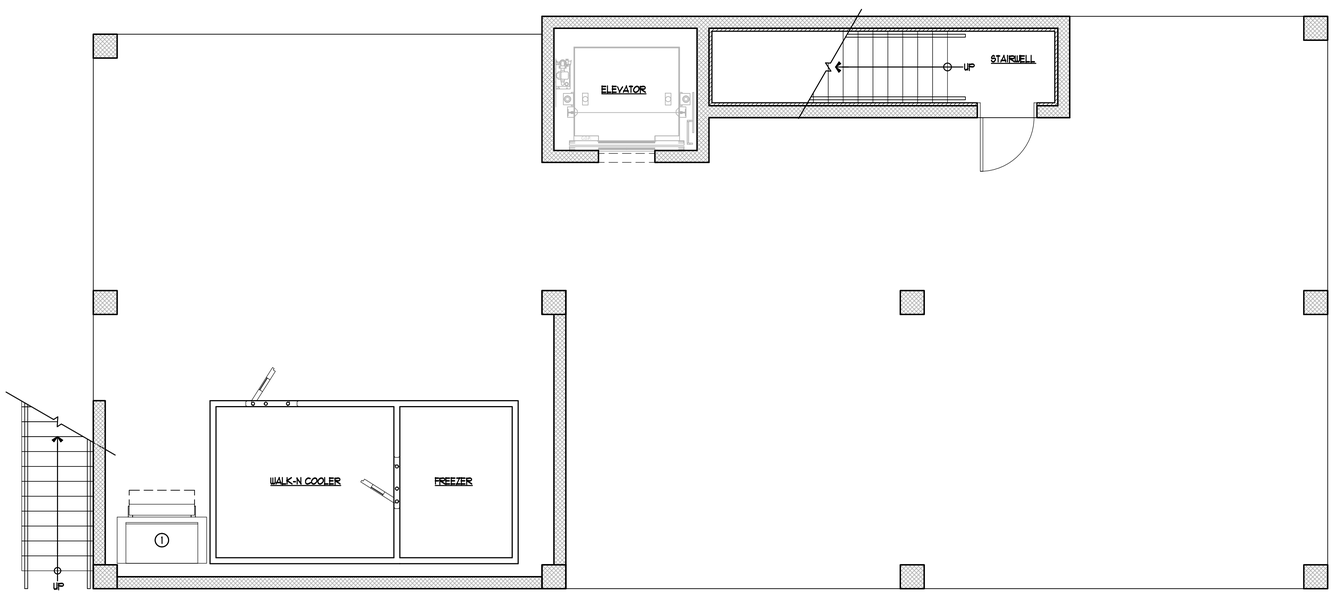

1 GROUND LEVEL PLAN
SCALE: 1/4" = 1'-0"

	EQUIPMENT SCHEDULE
ITEM #	DESCRIPTION
1	ICE MACHINE
2	SINGLE DECK CONVECTION OVEN
3	(6) GAS FRYERS
4	COUNTERTOP CHARBROILER
5	COUNTERTOP GRIDDLE
6	(6) BURNER HOT PLATE
7	WORKTOP REFRIGERATOR
8	REFRIGERATED PREP TABLE
9	REACH-IN REFRIGERATOR
10	PREP TABLE
11	DISH TABLE
12	14X4 DUMB WAITER
13	DOUBLE DUMP SINK
14	HAND SINK
15	3-COMP SINK
16	DISHWASHER
17	PRE-RINSE SINK AND FAUCET
18	SOILED DISH TABLE
19	MOP SINK
20	2-DOOR FREEZER
21	POS
22	ICE WELL WITH RAILS
23	ICE WELL WITH SODA GUN
24	GLASS RACK
25	3-BIN REACH IN
26	6 TAP 3-DOOR COOLER
27	2X2 FREEZER

THESE DOCUMENTS, DESIGNS, NOTES, DETAILS AND SPECIFICATIONS AND CONCEPTS ARE THE SOLE PROPERTY OF FRAZE DESIGN, INC. AND SHALL NOT BE REPRODUCED, RE-USED OR COPIED FOR OTHER PROJECTS, IN WHOLE OR PART WITHOUT THE WRITTEN CONSENT OF FRANK FRAZE, ARCHITECT, AIA.

ALL RIGHTS ARE RESERVED BY THE ARCHITECT IN ACCORDANCE WITH U.S. COPYRIGHT AND PATENT LAWS. UNAUTHORIZED REPRODUCTION WILL BE PROSECUTED TO THE FULL EXTENT OF THE LAW.

* THE DRAWINGS & DESIGN ARE VALID FOR 12 MONTHS FROM DATE OF BEING SEALED.

TO THE BEST OF THE ARCHITECT OR ENGINEER'S KNOWLEDGE AND BELIEF, THESE PLANS AND SPECIFICATIONS COMPLY WITH THE 8TH EDITION (2023) FLORIDA BUILDING CODE. IN ADDITION TO ANY OTHER APPLICABLE BUILDING CODES AND MINIMUM FIRE SAFETY STANDARDS

ALL DIMENSIONS AND JOB CONDITIONS SHALL BE VERIFIED BY THE CONTRACTOR, ANY AND ALL DISCREPANCIES SHALL BE REPORTED TO THE ARCHITECT PRIOR TO COMMENCEMENT OF CONSTRUCTION.

COPYRIGHT 2025 FRAZE DESIGN, INC. - FRANK FRAZE, AIA, NCARB

ISSUE	DATE	BY:
REVIEW	09/02/25	MK/SP
PERMIT	09/02/25	MK/SP
REV.		
REV.		
REV.		
REV.		
REV.		
REV.		
REV.		

MEMBER OF AIA American Institute of Architects

FD# 25101.00

Construction Documents for:

804 PAG WAY
804 PASS-A-GRILLE WAY
ST. PETE BEACH, FLORIDA

PROFESSIONAL SEAL

STATE OF FLORIDA
ORA FRANKLIN FRAZE IV
AR0014705
REGISTERED ARCHITECT

ORA FRANKLIN FRAZE, IV

FRAZE design
commercial residential architecture
FL LIC. NO. AA26000555
STUDIO: 727/328-3608
ST. PETERSBURG, FLORIDA 33713
FAX: 727/328-3609
3125 5th AVENUE N. SUITE 200
PHONE: 727/328-3608
E-MAIL: info@frazedesign.com

SHEET TITLE
GROUND LEVEL FLOOR PLAN

SHEET NUMBER
A-3

WALL LEGEND:

- METAL STUD WALL
- MASONRY WALL
- MASONRY WALL - 1 HR RATED

ELEVATOR NOTE:

- THE ELEVATOR IN THIS BUILDING WILL COMPLY WITH CHAPTER 30 OF THE 2023 FBC, 8TH EDITION AND SECTION 401 OF THE FLORIDA ACCESSIBILITY CODE.
- ELEVATOR TO MEET REQUIREMENTS OF NFPA 101 2018 EDITION, SECTION 7.5.4 ACCESSIBLE MEANS OF EGRESS
- ELEVATOR INSPECTION COMPLIES WITH FEMA TECHNICAL BULLETIN 4/ NOVEMBER 2000.

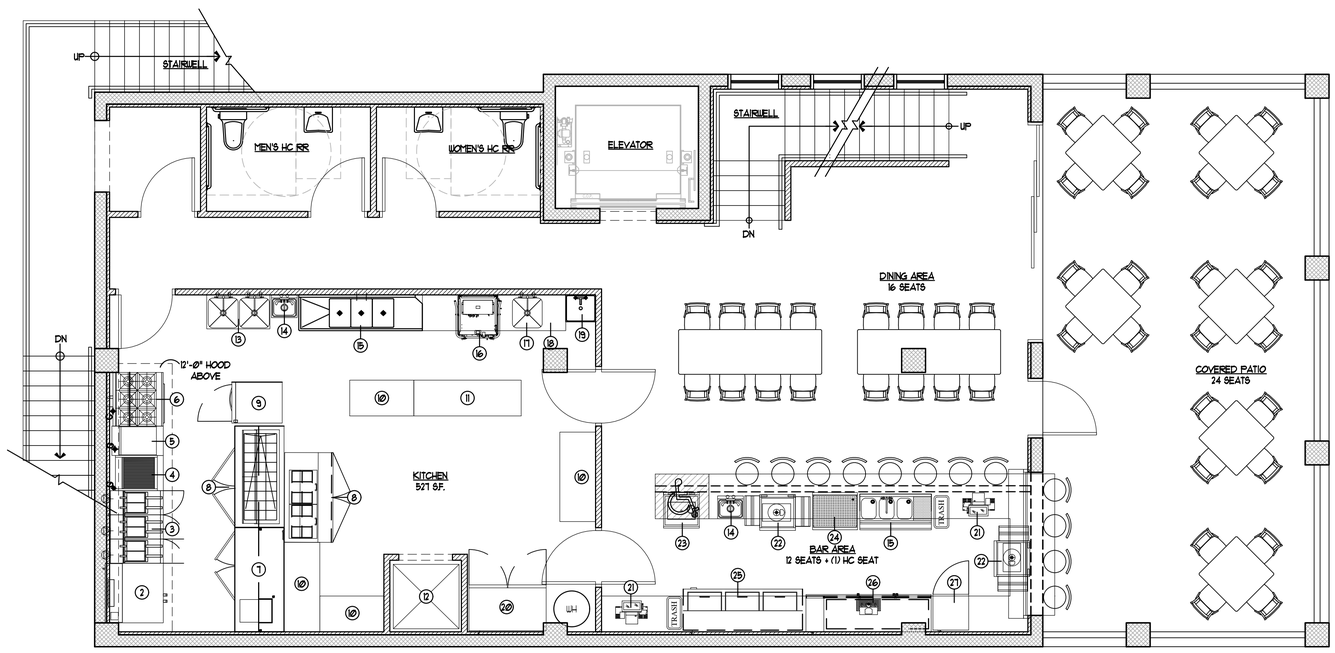

1 2ND LEVEL PLAN
SCALE: 1/4" = 1'-0"

	EQUIPMENT SCHEDULE
ITEM #	DESCRIPTION
1	ICE MACHINE
2	SINGLE DECK CONVECTION OVEN
3	(6) GAS FRYERS
4	COUNTERTOP CHARBROILER
5	COUNTERTOP GRIDDLE
6	(6) BURNER HOT PLATE
7	WORKTOP REFRIGERATOR
8	REFRIGERATED PREP TABLE
9	REACH-IN REFRIGERATOR
10	PREP TABLE
11	DISH TABLE
12	14X4 DUMB WAITER
13	DOUBLE DUMP SINK
14	HAND SINK
15	3-COMP SINK
16	DISHWASHER
17	PRE-RINSE SINK AND FAUCET
18	SOILED DISH TABLE
19	MOP SINK
20	2-DOOR FREEZER
21	POS
22	ICE WELL WITH RAILS
23	ICE WELL WITH SODA GUN
24	GLASS RACK
25	3-BIN REACH IN
26	6 TAP 3-DOOR COOLER
27	2X2 FREEZER

COPYRIGHT 2025 FRAZE DESIGN, INC. - FRANK FRAZE, AIA, NCARB

THESE DOCUMENTS, DESIGNS, NOTES, DETAILS AND SPECIFICATIONS AND CONCEPTS ARE THE SOLE PROPERTY OF FRAZE DESIGN, INC. AND SHALL NOT BE REPRODUCED, RE-USED OR COPIED FOR OTHER PROJECTS, IN WHOLE OR PART WITHOUT THE WRITTEN CONSENT OF FRANK FRAZE, ARCHITECT, AIA.

ALL RIGHTS ARE RESERVED BY THE ARCHITECT IN ACCORDANCE WITH U.S. COPYRIGHT AND PATENT LAWS. UNAUTHORIZED REPRODUCTION WILL BE PROSECUTED TO THE FULL EXTENT OF THE LAW.

* THE DRAWINGS & DESIGN ARE VALID FOR 12 MONTHS FROM DATE OF BEING SEALED.

TO THE BEST OF THE ARCHITECT OR ENGINEER'S KNOWLEDGE AND BELIEF, THESE PLANS AND SPECIFICATIONS COMPLY WITH THE 8TH EDITION (2023) FLORIDA BUILDING CODE. IN ADDITION TO ANY OTHER APPLICABLE BUILDING CODES AND MINIMUM FIRE SAFETY STANDARDS

ALL DIMENSIONS AND JOB CONDITIONS SHALL BE VERIFIED BY THE CONTRACTOR, ANY AND ALL DISCREPANCIES SHALL BE REPORTED TO THE ARCHITECT PRIOR TO COMMENCEMENT OF CONSTRUCTION.

ISSUE	DATE	BY:
REVIEW	09/02/25	MK/BP
PERMIT	09/02/25	MK/BP
REV.		
REV.		
REV.		
REV.		
REV.		
REV.		
REV.		

MEMBER OF AIA American Institute of Architects

FDI# 25101.00

Construction Documents for:

804 PAG WAY
804 PASS-A-GRILLE WAY
ST. PETE BEACH, FLORIDA

PROFESSIONAL SEAL

STATE OF FLORIDA · ORA FRANKLIN FRAZE IV · AR0014705 · REGISTERED ARCHITECT

ORA FRANKLIN FRAZE, IV

FRAZE design
commercial residential architecture
FL LIC. NO. AA26000535
STUDIO: 727/328-3608
ST. PETERSBURG, FLORIDA 33713
3125 5th AVENUE N. SUITE 200
PHONE: 727/328-3608
FAX: 727/328-3609
E-MAIL: info@frazedesign.com

SHEET TITLE
2ND LEVEL FLOOR PLAN

SHEET NUMBER
A-4

WALL LEGEND:

- METAL STUD WALL
- MASONRY WALL
- MASONRY WALL - 1 HR RATED

ELEVATOR NOTE:

- THE ELEVATOR IN THIS BUILDING WILL COMPLY WITH CHAPTER 30 OF THE 2023 FBC, 8TH EDITION AND SECTION 407 OF THE FLORIDA ACCESSIBILITY CODE.
- ELEVATOR TO MEET REQUIREMENTS OF NFPA 101 2018 EDITION, SECTION 7.5.4 ACCESSIBLE MEANS OF EGRESS
- ELEVATOR INSPECTION COMPLIES WITH FEMA TECHNICAL BULLETIN 4/ NOVEMBER 2000.

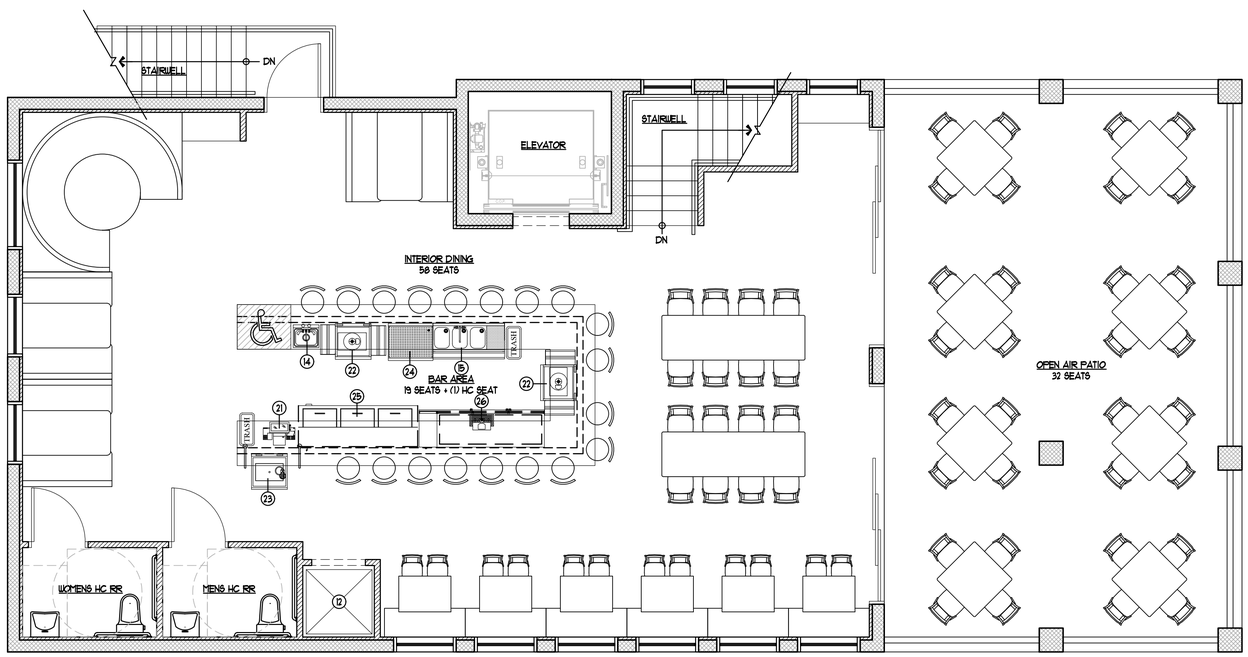

1 3RD LEVEL PLAN
SCALE: 1/4" = 1'-0"

	EQUIPMENT SCHEDULE
ITEM #	DESCRIPTION
1	ICE MACHINE
2	SINGLE DECK CONVECTION OVEN
3	(6) GAS FRYERS
4	COUNTERTOP CHARBROILER
5	COUNTERTOP GRIDDLE
6	(6) BURNER HOT PLATE
7	WORKTOP REFRIGERATOR
8	REFRIGERATED PREP TABLE
9	REACH-IN REFRIGERATOR
10	PREP TABLE
11	DISH TABLE
12	14X4 DUMB WAITER
13	DOUBLE DUMP SINK
14	HAND SINK
15	3-COMP SINK
16	DISHWASHER
17	PRE-RINSE SINK AND FAUCET
18	SOILED DISH TABLE
19	MOP SINK
20	2-DOOR FREEZER
21	POS
22	ICE WELL WITH RAILS
23	ICE WELL WITH SODA GUN
24	GLASS RACK
25	3-BIN REACH IN
26	6 TAP 3-DOOR COOLER
27	2X2 FREEZER

COPYRIGHT 2025 FRAZE DESIGN, INC. - FRANK FRAZE AIA NCARB

THESE DOCUMENTS, DESIGNS, NOTES, DETAILS AND SPECIFICATIONS AND CONCEPTS ARE THE SOLE PROPERTY OF FRAZE DESIGN, INC. AND SHALL NOT BE REPRODUCED, RE-USED OR COPIED FOR OTHER PROJECTS, IN WHOLE OR PART WITHOUT THE WRITTEN CONSENT OF FRANK FRAZE, ARCHITECT, AIA.

ALL RIGHTS ARE RESERVED BY THE ARCHITECT IN ACCORDANCE WITH U.S. COPYRIGHT AND PATENT LAWS. UNAUTHORIZED REPRODUCTION WILL BE PROSECUTED TO THE FULL EXTENT OF THE LAW.

* THE DRAWINGS & DESIGN ARE VALID FOR 12 MONTHS FROM DATE OF BEING SEALED.

TO THE BEST OF THE ARCHITECT OR ENGINEER'S KNOWLEDGE AND BELIEF, THESE PLANS AND SPECIFICATIONS COMPLY WITH THE 8TH EDITION 2023 FLORIDA BUILDING CODE. IN ADDITION TO ANY OTHER APPLICABLE BUILDING CODES AND MINIMUM FIRE SAFETY STANDARDS

ALL DIMENSIONS AND JOB CONDITIONS SHALL BE VERIFIED BY THE CONTRACTOR, ANY AND ALL DISCREPANCIES SHALL BE REPORTED TO THE ARCHITECT PRIOR TO COMMENCEMENT OF CONSTRUCTION.

ISSUE	DATE	BY:
REVIEW	09/02/25	MK/BP
PERMIT	09/02/25	MK/BP
REV.		
REV.		
REV.		
REV.		
REV.		
REV.		
REV.		

MEMBER OF AIA American Institute of Architects

FDI# 25101.00

Construction Documents for:

804 PAG WAY
804 PASS-A-GRILLE WAY
ST. PETE BEACH, FLORIDA

PROFESSIONAL SEAL

STATE OF FLORIDA
ORA FRANKLIN FRAZE IV
AR0014705
REGISTERED ARCHITECT

ORA FRANKLIN FRAZE, IV

FRAZE design
commercial residential architecture
FL. LIC. NO. AA26000585
E-MAIL: fd@frazedesign.com
3125 5th AVENUE N. SUITE 200 ST. PETERSBURG, FLORIDA 33713
PHONE: 727/328-3608 FAX: 727/328-3609 STUDIO: 727/328-3608

SHEET TITLE
3RD LEVEL
FLOOR PLAN

SHEET NUMBER
A-5

SECTION 19, TOWNSHIP 32 SOUTH, RANGE 16 EAST, PINELLAS COUNTY, FLORIDA.

BOUNDARY SURVEY

LEGAL DESCRIPTION:
LOT 3, BLOCK 5, MOREY BEACH, ACCORDING TO THE PLAT THEREOF, AS RECORDED IN PLAT BOOK 1, PAGE 102, OF THE PUBLIC RECORDS OF HILLSBOROUGH COUNTY, FLORIDA, OF WHICH PINELLAS COUNTY WAS FORMERLY A PART.

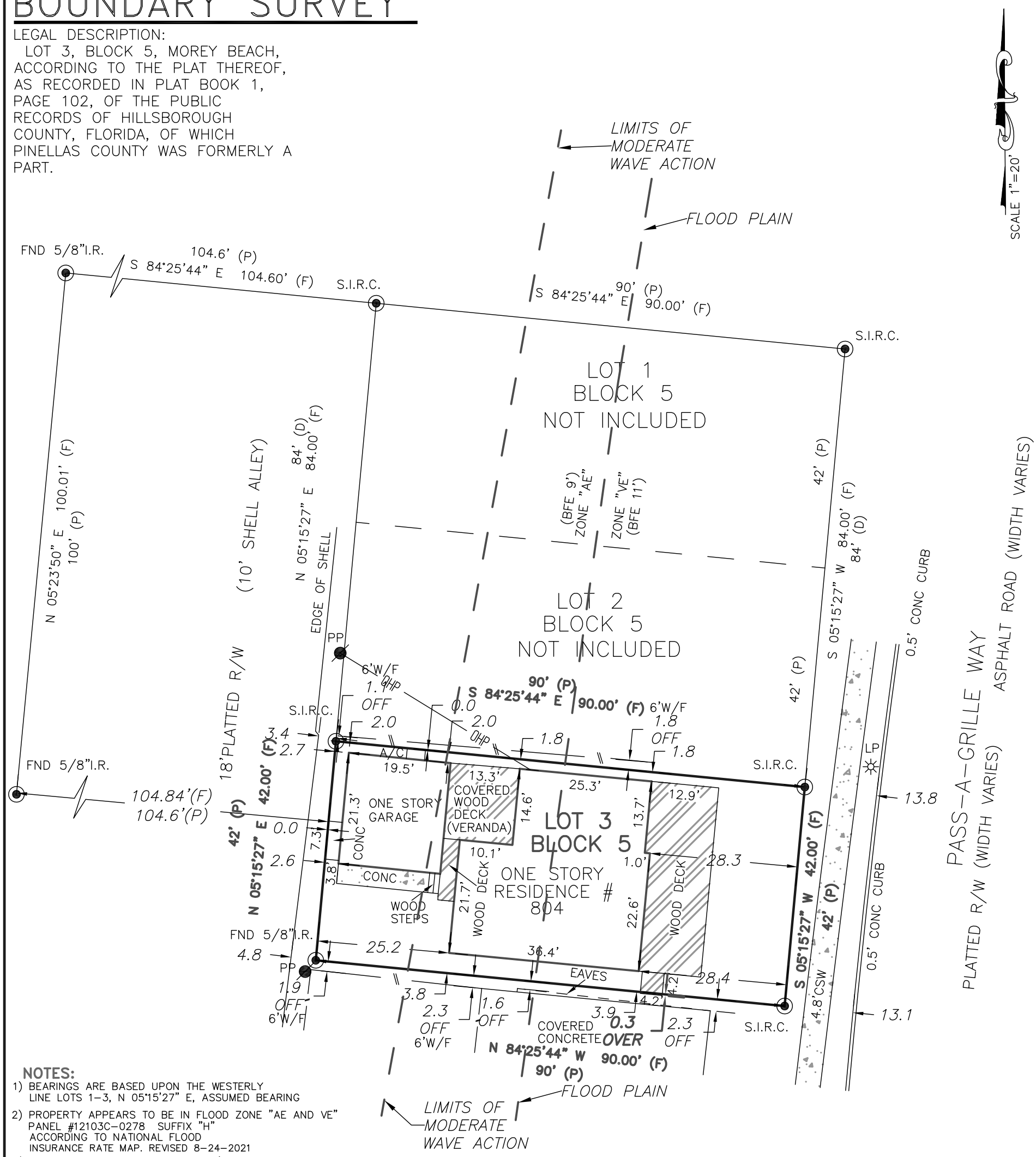

NOTES:

1) BEARINGS ARE BASED UPON THE WESTERLY LINE LOTS 1–3, N 05°15'27" E, ASSUMED BEARING
2) PROPERTY APPEARS TO BE IN FLOOD ZONE "AE AND VE" PANEL #12103C–0278 SUFFIX "H" ACCORDING TO NATIONAL FLOOD INSURANCE RATE MAP. REVISED 8–24–2021
3) ELEVATIONS ARE BASED ON NAVD '88 DATUM
4) ALL MEASUREMENTS ARE IN U.S. FEET
5) THIS SURVEY WAS CONDUCTED WITHOUT THE BENEFIT OF AN ABSTRACT OF TITLE, THEREFORE, THERE MAY BE OTHER EASEMENTS, RIGHT–OF–WAY, SETBACK LINES, AGREEMENTS, RESERVATIONS, OR OTHER SIMILAR MATTERS OF PUBLIC RECORD, NOT DEPICTED ON THIS SURVEY
6) FENCE LOCATION DOES NOT DETERMINE OWNERSHIP, OFF MEANS THE FENCE IS OFF OF THE PROPERTY, IN MEANS FENCE IS INSIDE THE PROPERTY.

WOOD DECK CROSSES OVER THE BOUNDARY LINE AS SHOWN

Certificate of Authorization "LB #6945"

LEGEND:

A/C = AIR CONDITIONER
(C)=CALCULATED
CLF=CHAIN LINK FENCE
C.M. = CONCRETE MONUMENT
CONC = CONCRETE
CSW = CONCRETE SIDEWALK
(D) = DEED MEASUREMENT
(F) = FIELD MEASURED
NO. I.D.= NO IDENTIFICATION
PRM = PERMANENT REFERENCE MONUMENT
PSM = PROFESSIONAL SURVEYOR AND MAPPER
RLS/PLS = REGISTERED/PROFESSIONAL LAND SURVEYOR
PVC= PLASTIC VINYL FENCE
PCP = PERMANENT CONTROL POINT
I.P. = IRON PIPE
I.R. = IRON ROD
LB = LICENSED BUSINESS
O.U. = OVER HEAD UTILITY
P.K. = PARKER KRYLON
(P) = PLAT
PP = POWER POLE
R/W = RIGHT–OF–WAY
ASPH = ASPHALT
(R)= RADIAL
FHD = FIRE HYDRANT
FND = FOUND
(N/R) = NON–RADIAL
(TYP)= TYPICAL
W/F =WOOD FENCE
S.P.K.D. = SET P.K. NAIL & DISK LB#6945
S.I.R.C. = SET 5/8" I.R. & CAP LB#6945

CERTIFIED TO:
804 PAG WAY LLC

Mark A Johnson

Digitally signed by Mark A Johnson
DN: c=US, o=Florida, dnQualifier=A01410D0000018C2081643E000906E7, cn=Mark A Johnson
Date: 2024.12.12 09:18:17 -05'00'

MARK A. JOHNSON
PROFESSIONAL SURVEYOR AND MAPPER
FLORIDA REGISTRATION NUMBER 6572
NOT VALID WITHOUT THE ELECTRONIC SIGNATURE AND SEAL OF A FLORIDA LICENSED SURVEYOR AND MAPPER

MARK A. JOHNSON
License Number 6572
STATE OF FLORIDA
Professional Surveyor and Mapper

CERTIFICATION

I HEREBY CERTIFY THAT THIS SURVEY WAS MADE UNDER MY RESPONSIBLE CHARGE AND MEETS THE FLORIDA STANDARDS OF PRACTICE AS SET FORTH BY THE BOARD OF PROFESSIONAL LAND SURVEYORS. THE SEAL AND UNIQUE SIGNATURE APPEARING ON THIS DOCUMENT IS AUTHORIZED BY MARK A. JOHNSON PSM 6572 AND IS COMPLIANT WITH F.S.61G17–7.0025(3) (a) (b) (c) (d)

FIELD WORK BY:	JOSH	DATE: 12–7–2024	F.B. / PG. 3 / 31
DRAFTED BY:	B.P.	DATE: 12–9–2024	JOB # 24–1192

DON WILLIAMSON & ASSOCIATES, INC.
PROFESSIONAL SURVEYORS & MAPPERS LB # 6945
5020 GUNN HIGHWAY SUITE 220 A
TAMPA, FL 33624
(813) 265–4795
FAX (813) 264–6062
WAISURVEYING@GMAIL.COM

PUBLIC HEARING
City Commission
Resolution 2025-27, CUP 25133
12/9/25 at 6pm.
City Hall - 155 Corey Ave.
planning@stpetebeach.org

CITY COMMISSION MEETING
CITY OF ST. PETE BEACH
COMMISSION CHAMBERS

Agenda Report

Agenda Title Name: Resolution 2025-28: Approving Conditional Use Permit No. 25112 for Phase I & II Pump Station 1 Improvements at 0 & 8665 Boca Ciega Dr

Action Request: Motion to [approve/approve with conditions/deny/continue to [specify date certain]] Resolution 2025-28 and Conditional Use Permit 25112.

Strategic Objective: Recovery, Resiliency & Sustainability
Reliable Infrastructure

Date: December 16, 2025

Prepared By: Brandon Berry, Senior Planner

Through: Frances Robustelli, City Manager

Summary of Issue: The subject property is the site of Pump Station 1 which is authorized under the current fiscal year's budget for rehabilitation. As the property is located in a split zoning of RU-2 Residential District and T/U Transportation/Utility District, a conditional use permit is required for the above-ground improvements proposed under the subject scope, including the odor control pumps and generator. Public facilities are permitted in any zoning district as a conditional use, provided the subject property is less than three acres. The subject property is approximately one-quarter of an acre.

Staff does not find there to be any significant adverse impacts from the subject project. VIsual appeal, lighting, and noise are the three most likely impacts from the project, and all are mitigated or limited in impact outside of emergency periods. The structure's photometric plan does show canopy lighting on the south side, which could be a nuisance to the neighbor if not shielded, but this concern can be addressed under the permitting scope.

Funding: Funded for $6.25 million in the Fiscal Year 2026 budget.

Attachments:

1. Resolution 2025-28
2. Presentation
3. Staff Report
4. Application
5. Supplemental Response - Criteria
6. Phase I Plans
7. Phase II Plans
8. Renderings
9. Property Survey - Signed

RESOLUTION 2025-28

A RESOLUTION OF THE CITY OF ST. PETE BEACH, FLORIDA, AUTHORIZING CONDITIONAL USE PERMIT 25112 PURSUANT TO LAND DEVELOPMENT CODE SECTIONS 6.19. AND 19.2. FOR THE PHASE 1 AND 2 IMPROVEMENTS OF MASTER PUMP STATION 1 AT 0 AND 8665 BOCA CIEGA DR, WITH PARCEL NUMBERS OF 25-31-15-97686-000-0010 AND 25-31-15-95202-000-0050; PROVIDING FOR CORRECTION OF SCRIVENER'S ERROR AND AN EFFECTIVE DATE.

WHEREAS, Section 4.7 of the City of St. Pete Beach's Land Development Code requires the City Commission to adopt conditional use permits by resolution.

WHEREAS, Pump Station 1 is considered a public infrastructure facility and is required, within the property's applicable zoning of RU-2 and T/U, to obtain a conditional use permit for expansion of the use, subject to Land Development Code Sections 6.19. and 19.2.

WHEREAS, the City Commission has authorized the subject rehabilitation project in the fiscal year 2026 budget, with Phase I improvements proposed to begin in early 2026 and Phase II improvements in July 2026.

WHEREAS, treatment of public infrastructure facilities as conditional uses in largely-residential areas provides a basis for reasonable public comment and consideration of improvements or expansions that could have a significant adverse impact on neighboring properties.

WHEREAS, the City Commission finds minimal significant adverse impact from the subject rehabilitation and improvement project, inclusive of both phases, and/or finds that any significant adverse impacts have been reasonably mitigated through project commitments or conditions.

WHEREAS, notice of this hearing has been provided in accordance with applicable law.

WHEREAS, the City Commission has the authority to approve none, some, or all of the requested conditional uses.

NOW, THEREFORE, BE IT RESOLVED BY THE CITY COMMISSION OF THE CITY OF ST. PETE BEACH, THAT:

SECTION 1. Recitals. The above recitals ("Whereas" clauses) are true and correct and adopted hereby as findings, purpose and intent of the City Commission.

SECTION 2. The City Commission hereby approves the requested conditional use permit application number #25112, incorporated herein by reference.

SECTION 3. Scrivener's Error. The City Attorney may correct scrivener's errors found in this Resolution by filing a corrected copy of this Resolution with the City Clerk.

SECTION 4. Effective Date. This resolution shall take effect immediately upon adoption.

PASSED AND APPROVED BY THE CITY COMMISSION OF THE CITY OF ST. PETE BEACH, FLORIDA, THIS _____ DAY OF _____, 2025.

CITY COMMISSION, CITY OF ST. PETE BEACH, FLORIDA.

_____
Adrian Petrila, Mayor

ATTEST:

_____
Renee Rose, City Clerk

APPROVED AS TO FORM AND LEGAL SUFFICIENCY:

_____
Ralf Brookes, City Attorney

Conditional Use Permit

Case No. 25112

Property Address: 0 & 8665 Boca Ciega Dr

Agent/Owner: Adam Porrier, Assistant City Manager, for the City of St. Pete Beach

Request: *Conditional Use Permit:* The City of St. Pete Beach requests to improve Pump Station 1 to replace exterior odor control unit, replace submersible pumps, install an elevated generator, and make associated interior, exterior, and underground improvements associated with Phases 1 and 2 of the Pump Station 1 Rehabilitation project (LDC Sec. 6.19 & 19.2).

Listing of Exhibits

- Aerial
- Zoning Map
- Survey
- Floor Plan & Request Details
- Summary of Findings
- Basis for Approval with Conditions
- Basis for Denial in This Location
- Recommended Staff Conditions
- Action Options

St. Pete Beach
The Sunset Capital of Florida
COMMUNITY DEVELOPMENT

Aerial

St. Pete Beach
The Sunset Capital of Florida
COMMUNITY DEVELOPMENT

Zoning Map

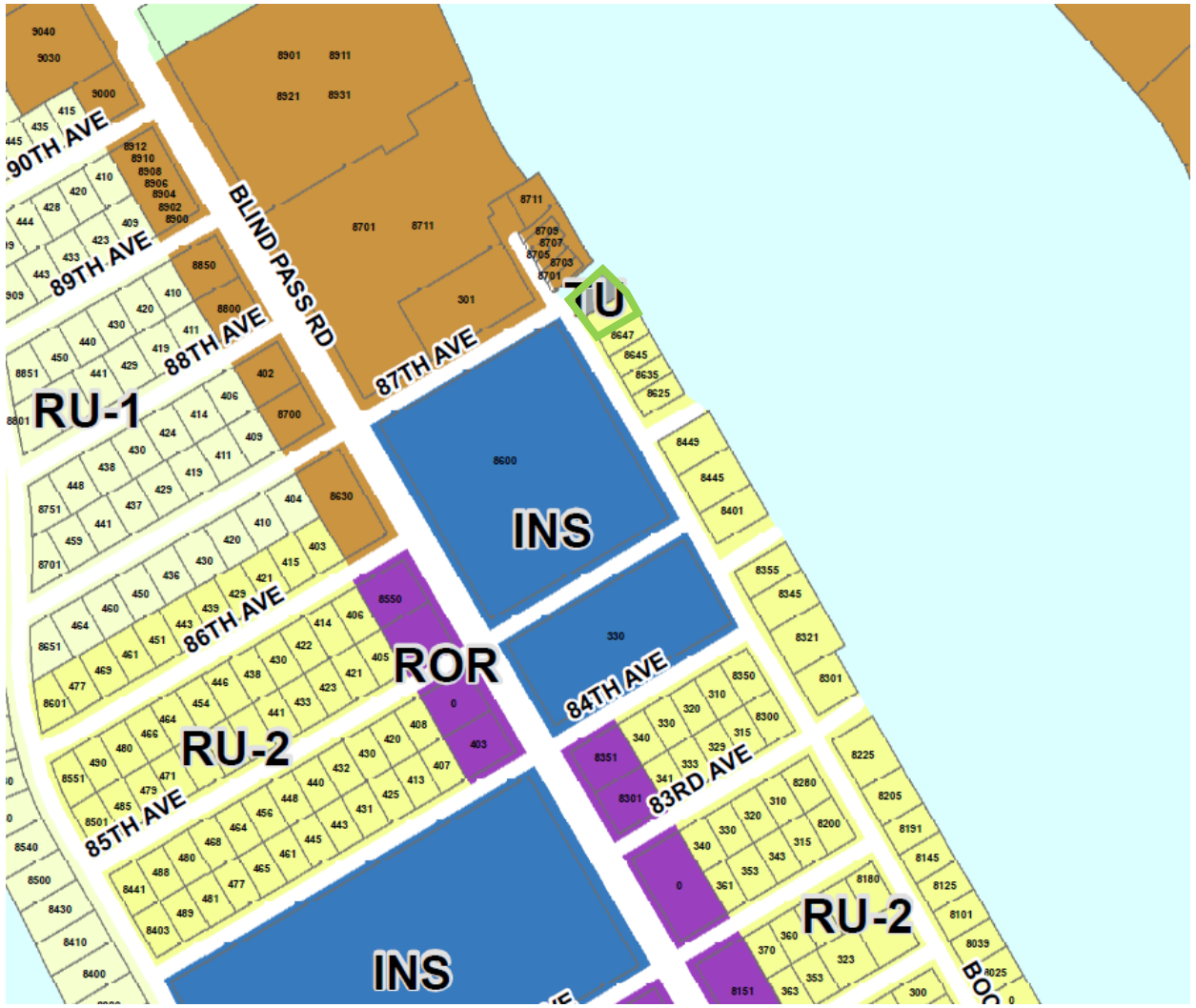

St. Pete Beach
The Sunset Capital of Florida
COMMUNITY DEVELOPMENT

Survey

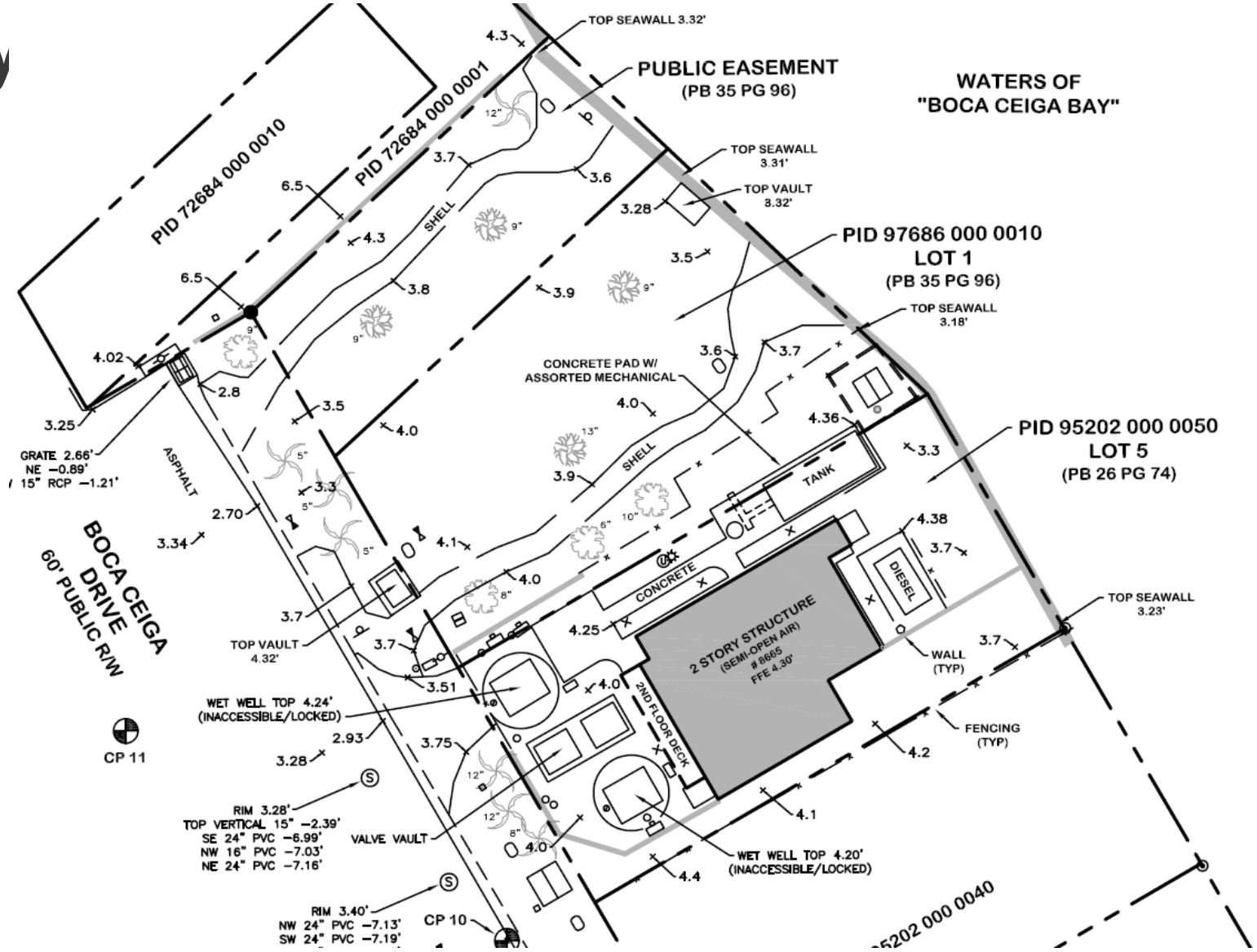

St. Pete Beach
The Sunset Capital of Florida
COMMUNITY DEVELOPMENT

Site Plan (Phase I)

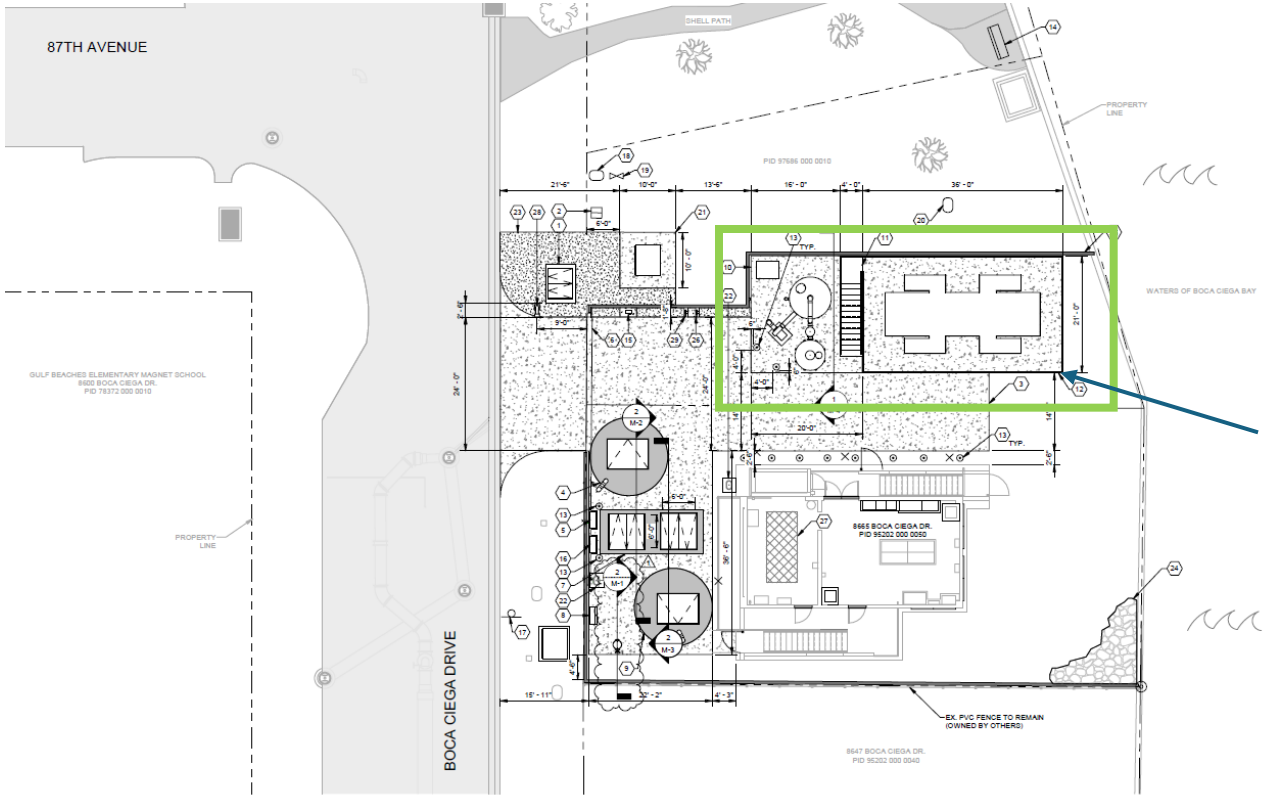

New generator and odor control pumps

St. Pete Beach
The Sunset Capital of Florida
COMMUNITY DEVELOPMENT

Site Plan (Phase II)

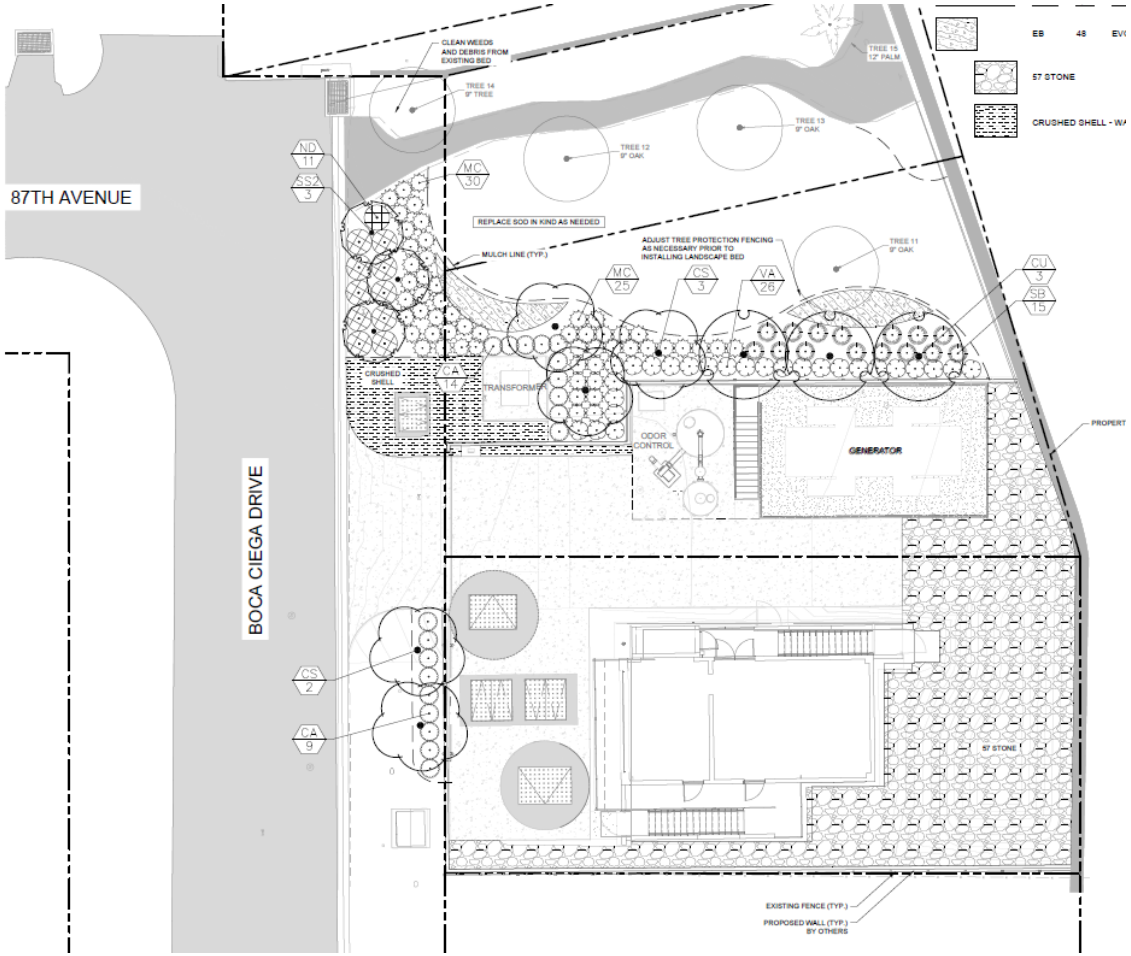

St. Pete Beach
The Sunset Capital of Florida
COMMUNITY DEVELOPMENT

Request Details

The Land Development Code requires a conditional use permit for public facilities (new and expanded) in:

- Transportation/Utility District
- RU-2 Residential District (under 3 ac)

Generator and odor control pumps are new above-ground improvements, replacement submersible pumps are new underground improvements, and building repairs/rehabilitation are proposed in Phase II.

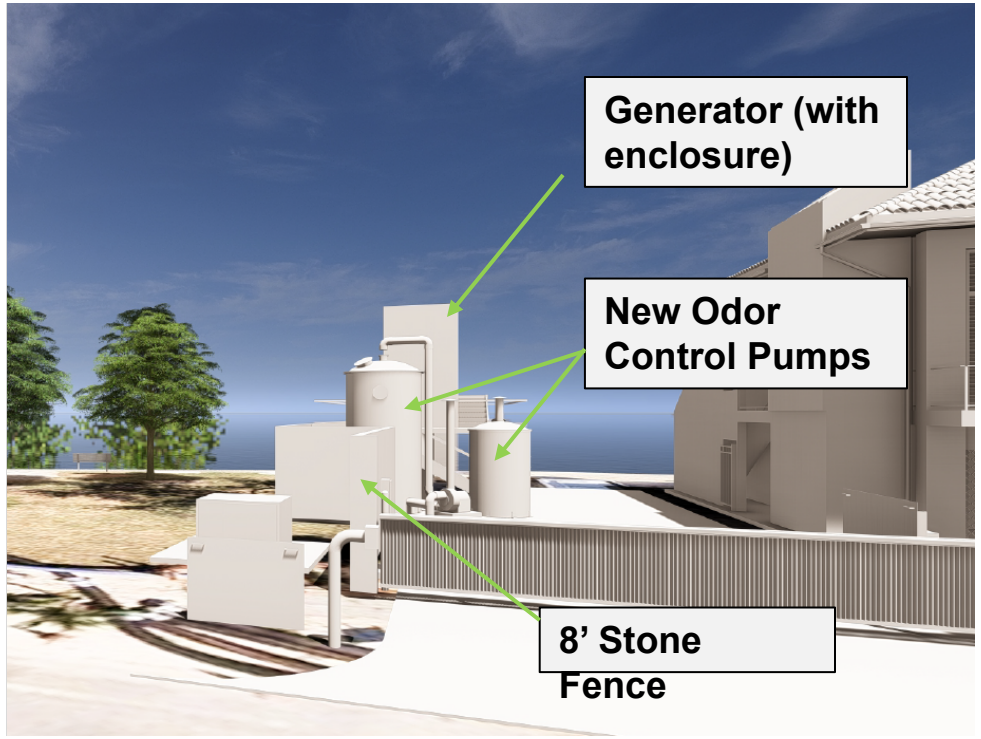

St. Pete Beach
The Sunset Capital of Florida
COMMUNITY DEVELOPMENT

Summary

- The relevant CUP criteria pertain to:
  - Noise (generator);
  - Visual screening (odor pumps/generator);
  - Lighting, particularly on the south side of the building.
    - Minimal site lighting per photometric plan.

- Generator is set within a 25 dB-reducing enclosure at one meter.
  - 35 dB reduction is also an option, but is costlier.
  - Selected enclosure would result in generator being heard at 90 dB at one meter – approximately the sound of a lawnmower.
  - Trains five minutes per month – can be set to run during the day.

St. Pete Beach
The Sunset Capital of Florida
COMMUNITY DEVELOPMENT

Summary

- Landscaping screening is installed in Phase II (July 2026).
  - Buttonwoods are installed at 12 feet, fast growers (1-2 feet per year)
- Eight-foot simulated stone wall will be installed in Phase I but provide only moderate screening of the control pumps (16.5 feet in height).
  - Wall could be installed closer to the street to provide additional screening, but would preclude effectiveness of landscaping screening.
- Lighting on south side of building should be oriented to avoid spillover and indirect effects.
- Staff does not propose any conditions: City Commission can direct Staff on requirements.

St. Pete Beach
The Sunset Capital of Florida
COMMUNITY DEVELOPMENT

Basis for Approval

- Project supported by:
  - Goal 1 of the Future Land Use Element - Maintenance of character, minimizing threats from hazards and nuisances.
    - Policy 1.7.5 – Public facilities shall be located to be efficient, cost-effective, and minimize adverse impacts (Res. 2003-19).
  - Goal 1 and Policy 1.1.3 of the Infrastructure Element – Providing safe, efficient, and cost-effective systems and maintain level of service standards.
  - Goal 1, Objective 1.1, and Policy 1.1.4 of the Capital Improvements Element pertaining to remediation of deficiencies and prioritization of critical public facilities.
- Staff finds the project has been adequately designed to mitigate nuisances to surrounding land uses.

St. Pete Beach
The Sunset Capital of Florida
COMMUNITY DEVELOPMENT

Basis for Denial

- Staff does not find a basis for denial of this request. Improvements and maintenance are carefully-considered and potential adverse impacts are reasonably mitigated. Improvements to this facility are critical to the function of the City.
- City may wish to consider future water-side screening of the generator with enclosure due to height.
- Lights on the south side of the building must be appropriately shielded.

St. Pete Beach
The Sunset Capital of Florida
COMMUNITY DEVELOPMENT

Action Options

"Motion to **[approve / approve with conditions / deny / continue to [specify date certain]]** Resolution 2025-28 for Conditional Use Permit 25112.

St. Pete Beach
The Sunset Capital of Florida
COMMUNITY DEVELOPMENT

PLANNING DIVISION
CONDITIONAL USE APPLICATION
STAFF REPORT TO THE
CITY OF ST. PETE BEACH CITY COMMISSION

CASE NO.: 25112 **HEARING DATE:** December 9, 2025
OWNER/APPLICANTS: City of St. Pete Beach
PREPARED BY: Brandon Berry, Planner
This application is a request for a Conditional Use Permit:

REQUEST:	The City of St. Pete Beach requests a conditional use permit to expand Pump Station 1, including the installation of a new generator, odor control pumps, transformer, and underground improvements (Phase I), as well as landscaping improvements and building renovations (Phase II) (LDC Sec. 6.19., 9.4.(c), & 19.2.).
LOCATION:	0 & 8665 Boca Ciega Dr; WILHELM PARK REPLAT LOT 1 & WATSON'S REPLAT OF TRACT 5 LOT 5; Parcel #s 25-31-15-97686-000-0010 & 25-31-15-95202-000-0050.
ACREAGE:	Approximately 0.23 acres (10,100 sq. ft.)
EXISTING ZONING & LAND USE	RU-2 Residential District & TU – Transportation/Utility District RU – Residential Urban & TU – Transportation Utility
SURROUNDING FUTURE LAND DESIGNATIONS:	North – 87th Ave Street-end & RM – Residential Medium South – RU – Residential Urban East – Water West – Boca Ciega Dr & INS - Institutional
SURROUNDING ZONING MAP DESIGNATIONS:	North – 87th Ave Street-end & RM – Residential Medium South – RU-2 Residential District East – Water West – INS – Institutional District
SURROUNDING EXISTING USES:	North – Street-end park and townhouses South – Single-family Residence East – Water West – Gulf Beaches Elementary School

BACKGROUND

The subject property is the location of Pump Station 1, which services the northern part of the City. Part of the Pump Station 1 Rehabilitation Project scheduled in the Capital Improvement Plan, the subject request involves the establishment of a new enclosed generator to replace an existing small diesel generator at the rear of the structure, replacement of a new above-ground odor control system, pump upsizing, and underground improvements, the first two of which constitute an expansion of the use and require the subject conditional use permit.

The subject property is comprised of two platted lots which are spread between the Transportation/Utility District and RU-2 Residential District. As this is a public service use, on a property of under three acres, it is allowed in any zoning district pursuant to Land Development Code Sec. 6.19.

ZONING MAP

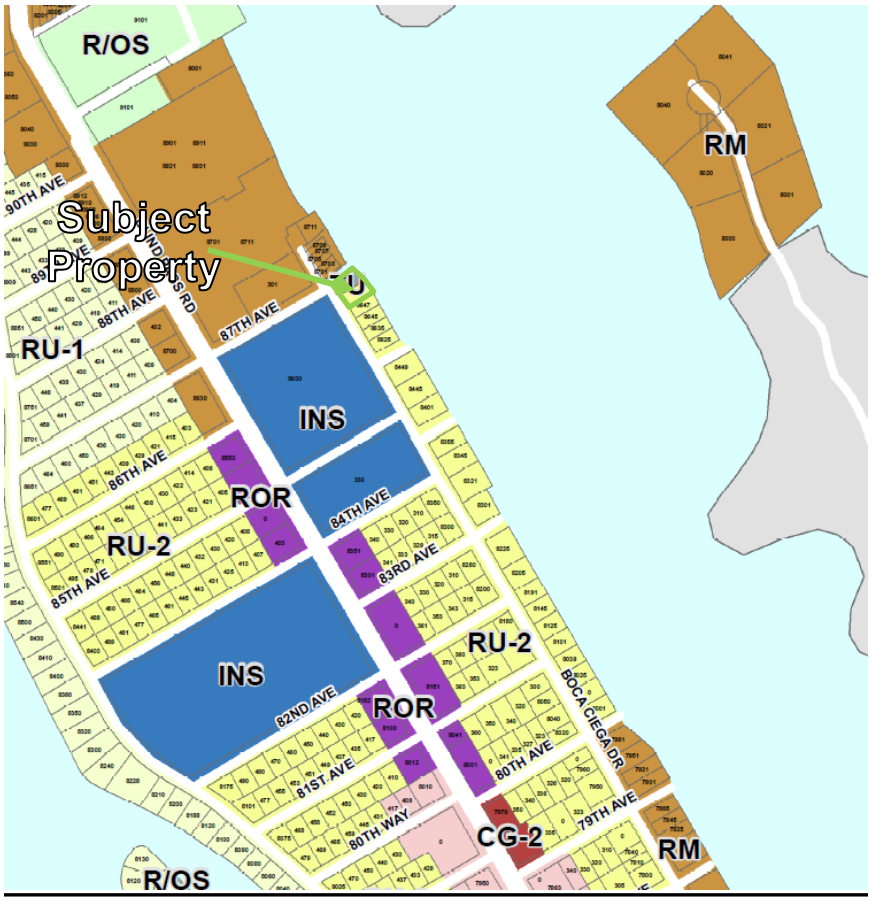
R/OS
Subject Property
U
RM
90TH AVE
89TH AVE
88TH AVE
87TH AVE
RU-1
INS
86TH AVE
ROR
84TH AVE
RU-2
85TH AVE
83RD AVE
RU-2
INS
82ND AVE
ROR
BOCA CIEGA DR
81ST AVE
80TH AVE
80TH WAY
79TH AVE
CG-2
RM
R/OS

AERIAL MAP

SITE REQUEST PLAN

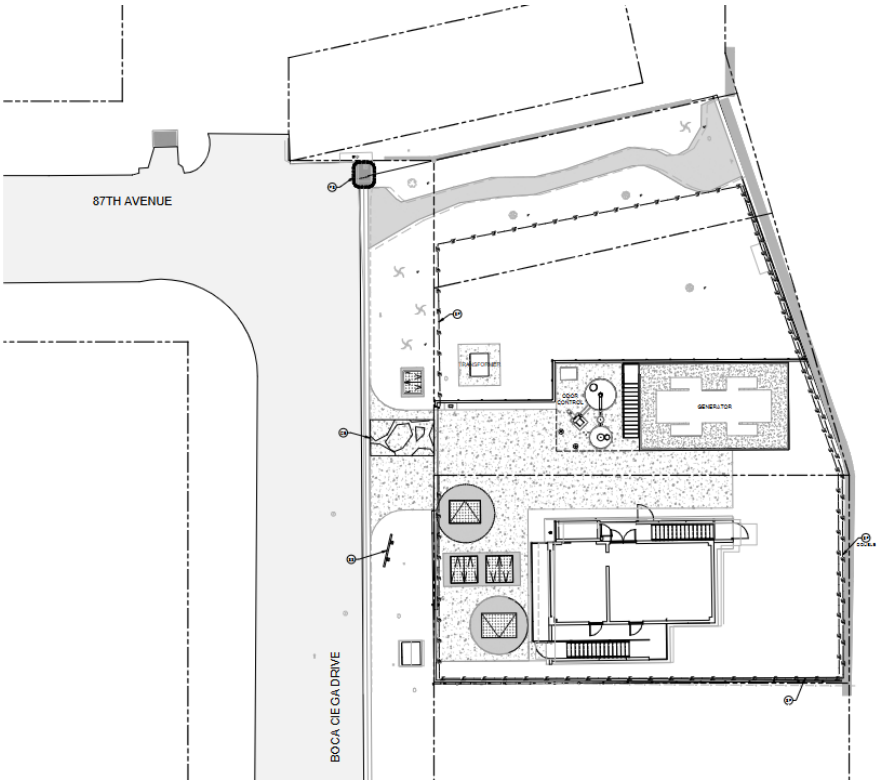

ANALYSIS

While a significant portion of the scope of the request falls under repair and maintenance, including substitution of four 140 horsepower pumps with 215 horsepower pumps and underground improvements, the development will include a large new generator and odor control pumps installed on a platform on the northern side of the building, constituting the subject request. The improvements will also include installation of a transformer and, in Phase II, landscaping of the property along with building repairs.

TRC Comments

This request was reviewed by staff at Technical Review Committee on May 2, 2025, where questions were asked about the frequency and length of time for training of the generator, and timeframes for installation of the landscaping.

Land Development Code Sec. 4.4 – Standards for review.
When considering an application for approval of a conditional use, the City Commission review shall consider the following standards:

(1) **Whether the conditional use is consistent with the goals, objectives, and policies of the Comprehensive Plan, any adopted special area plan and these regulations;**

The conditional use request is consistent with the Comprehensive Plan in the following ways:

Future Land Use Element

GOAL 1:

Ensure that the residential character of the City is maintained and protected while:
[…]
a. Minimizing the threat to health, safety, and welfare posed by hazards, nuisances, incompatible land uses, and environmental degradation; and
[…]

Policy 1.7.5 Public facilities and utilities shall be located so as to maximize the efficiency of services provided; to minimize their cost; and to minimize their adverse impacts on the natural environment.

Infrastructure Element

GOAL 1:

Provide necessary sanitary sewer, solid waste, and potable water services by a safe, efficient, and cost-effective system which maintains adequate facilities and provides for orderly growth and expansion.

Policy 1.1.3 The replacement or modification of infrastructure facilities shall be compatible with the City's Level of Service standards.

Capital Improvements Element

GOAL 1:

Undertake fiscal actions necessary to provide and maintain public facilities for all residents, within its jurisdiction, at or exceeding the adopted levels of service standards.

Objective 1.1 Capital improvements will be provided to correct existing deficiencies, to accommodate desired future growth, and to replace dilapidated or obsolete facilities, as indicated in the five-year schedule of improvements which are designed to correct existing deficiencies identified in this Element.

Policy 1.1.4 The City shall use clear guidelines when evaluating and prioritizing proposed capital improvement projects, including but not limited to the following:

a. The project is needed to eliminate a proven or obvious hazard to public health and safety;
[…]
c. The project is needed to preserve, maintain, refurbish, achieve full use, or replace existing facilities;
[…]
e. The project will increase efficiency or use of existing facilities, prevents or reduces future improvement cost, or provides service to all residents equitably;
[…]
h. The project will increase the economic base or quality of life of the residents;
[…]

(2) **Whether the proposed use will be compatible with the character of the existing area, including existing structures and structures under construction, existing public facilities and public facilities under construction, and residential, commercial and/or service facilities available within the existing area. More specifically:**

a. **Whether the overall appearance and function of the area will be significantly affected. Consideration shall be given to the existence of other uses in the area, based on the number, size, and location of the uses and the intensity and scale of the proposed and existing uses in the area;** *The overall appearance of the area north of the pump station building will moderately change, albeit more in the near term prior to installation of the landscaping proposed in Phase II. The odor control equipment is being installed with a total height of approximately 16.5 feet, and the generator pad will be installed behind it when viewed from the street with an elevation of the pad above grade of approximately six feet. The area will be screened by an eight-foot simulated stone fence that will jog along the northern street-end frontage, part of the Boca Ciega Dr frontage, and southern property line. Using the principal of similar triangles, where distant structures are typically obscured more by intervening obstructions placed closer to the line of sight of the viewer, the top nine feet of the odor control equipment should be visible*

from an average-height person standing at the eastern street curbline of Boca Ciega Dr, and a similar overrun visible for someone standing in the center of the northern park.

This is one of two pump stations in the City and has been in its present configuration since 2007. The building itself will not significantly change in appearance, outside of some minor alterations proposed in Phase II.

b. **Whether the application will preserve any city, state or federally designated historic, scenic, archaeological, or cultural resources;** *The City's waterfronts are considered scenic resources, but this proposal will not substantially change the waterfront visibility other than providing modest additional obscurity just north of the building, where equipment is presently located. As seen in renderings, the elevation and scale of the generator will be significant when viewed from the water. A PVC fence is currently in place on the northern side of the building and will be replaced with a simulated stone fence.*

c. **Whether the application will be compatible with adjacent development, if any, based on characteristics such as size, building style and scale; or whether such incompatibilities are mitigated through such means as screening, landscaping, setbacks, and other design features.** *The building provides adequate screening of interior equipment, which will remain. Exterior louvers will be replaced like for like, stucco surfaces will be painted, and doors will be replaced, under Phase II of the project.*

In Phase I, the only new and significant screening of the equipment will be through the simulated stone wall. Under Phase II, the silver buttonwood and sea grape trees should provide effective screening of the northern elevation of the site, and some additional screening along the western elevation, accounting for the drive path and apron that will prohibit fully obscuring the western side of the exterior equipment and generator. Trees will be installed at 12 feet planting height, providing additional initial screening above the code-minimum eight feet. There is no significant foliage proposed for the eastern side of the generator, which may be considered in the future to provide screening from the water.

d. **Whether the application will have significant adverse impacts on the livability and usability of nearby land due to noise, dust, fumes, smoke, glare from lights, late-night operations, odors, vehicular traffic, truck and other delivery trips, the amount, location, and nature of any outside activities, potential for increased litter, or privacy and safety issues.** *The pump station building will continue to function as it does currently.*

Odors will continue to be controlled through the new exterior pumps, which may initially be less visually appealing than current conditions but should

effectively mitigate a major externality of the pump station. Over time, this area will be better screened than it is at present.

All generators exercise at intervals to continue ensuring performance. For the subject generator, the exercising time is only 15 minutes per month, and timing can be controlled by the City to ensure it does not run during expected quiet hours. The City has selected 25 db(A) attenuation at one meter, five feet above grade as the level of noise attenuation for the generator, where 35 db(A) was initially specified. Measured at one meter, according to the responsible engineer, this would provide a sound level of 90 decibels (equivalent to a lawnmower) compared with a 35 db(A) enclosure, which would produce 80 decibels (equivalent to a hairdryer). Although the generator is not in free field conditions, the inverse square law provides an estimate of less than 65 db(A) at the property line of the northern townhouses for the 25 decibel attenuation option, and an estimate of less than 55 db(A) for the 35 decibel attenuation option. Both are less than the City's maximum daytime noise limit, from which the City's equipment can be excepted. However, this limit does provides a rule of thumb for maintenance of reasonable daytime noise levels at receiving residential properties..

(3) **Whether the transportation system is capable of adequately supporting the proposed use in addition to the existing uses in the area. Evaluation factors include street capacity and level of service, access to arterials, transit availability, on-street parking impacts, if any, site access requirements, neighborhood impacts, and pedestrian safety;** *Traffic analysis is not applicable for the subject use. Other than occasional visits from maintenance vehicles, the site is not a traffic generator.*

(4) **Whether the minimum off-street parking area required and the amount of space needed for the loading and unloading of trucks, if applicable, will be provided and will function properly and safely;** *Minimum off-street parking counts are not applicable. The site has space for the parking of City vehicles. It is not a publicly-accessed facility.*

(5) **Whether generally, the public health, safety and welfare will be preserved, and any reasonable conditions necessary for such preservation have been made;** *Repairs to Pump Station 1, to remediate storm damage and address other maintenance and repair needs, are inherently essential to the health and welfare of the public. Zoning staff finds the project has been well designed to mitigate visual and noise concerns, which are the two issues Staff finds will likely be generated from the development.*

The site lighting photometric plan shows the lighting on the site will be maintained, and is designed around the new equipment, to not cast light beyond the property line of neighboring residential property. However, the building's canopy lighting will need to be designed to be shielded on the south side of the building in particular, to prevent

light intrusion across the residential property line. The building photometric plan on sheet E-4 shows footcandles of 10-14 at the stairs, which is appropriate for moderate lighting for safety access, but this stair is also only approximately six feet from the property line.

(6) **Whether the applicant has demonstrated the financial and technical capacity to complete any improvements and mitigation necessitated by the development as proposed and has made adequate legal provision to guarantee the provision such improvements and mitigation;** *The improvements are funded in the fiscal year 2026 budget.*

(7) **Whether the proposed use complies with all additional standards imposed on it by the particular provision of these regulations authorizing such use and by all other applicable requirements of the regulations of the City of St. Pete Beach.** *The request will comply with all permitting requirements.*

BASIS FOR APPROVAL

To approve the conditional use for the subject improvements in this location, the City Commission must find that the proposed conditional use is compatible with surrounding uses, and that any significant adverse impacts from the proposed improvements are mitigated. Staff does not find a reasonable basis to suggest this project will produce significant additional adverse impacts, when considered in balance with the threats to health, safety and welfare that lack of new above-ground improvements would entail. While the generator will likely be audible from the neighboring property line when exercising or in active use, it exercises for 15 minutes per month and will be no more of a nuisance than a standard lawnmower operated from a neighboring property. The odor control pumps may be visually unappealing, but they will be effectively blocked from the northern property line when the landscaping is installed and will be somewhat obscured from the western side as well. The City will need to remain cognizant of light spillover from the building's canopy lighting on the southern side, and should convene with the contractor to ensure that lights contain adequate shielding to provide nuisance lighting conditions. The City may also wish to consider additional landscaping on the east side, due to the size of the generator.

To this end, Staff finds this project is supported by Goal 1 of the Future Land Use Element, which supports maintenance of the residential character of the City and minimizing threats from hazards, nuisances, and incompatible land uses. It also supports Policy 1.7.5, which states that public facilities and utilities shall be located to be efficient and minimize cost and adverse impacts. The pump station has existed for nearly two decades and was found in the original 2003 basis of design report to be the most economical and efficient means of providing for the master lift station (Resolution 2003-19). This basis remains unchanged. The project also supports the aforementioned goals, objectives and policies of the Infrastructure and Capital Improvements Elements.

BASIS FOR DENIAL

Staff does not find a basis for denial of this request. The improvements and maintenance are carefully-considered and potential adverse impacts are reasonably mitigated. The odor control pumps will likely be somewhat visually unappealing from the street and northern park until trees are installed, so the timing of landscaping improvements should be committed, but not at a pace where it could require removal of healthy landscaping to complete Phase II improvements and result in unnecessary expenditures. The City may wish to consider extending the wall out toward the western frontage property line to provide additional screening from the street, but such an extension would need to be placed substantially closer to the property line than currently proposed to have any significant additional visual impact from standard line of sight. This would also lessen the impact and appeal of the buttonwood and sea grapes when they are eventually installed, as they would be obscured by the fence. Phase II is planned to start in July 2026, less than six months following the start of Phase I, and will include the subject landscaping.

The City could consider a 35 db(A) enclosure to further mitigate noise impact from the generator, as originally proposed. There is a significant additional cost to this enclosure which the City would need to bear.

Phase II canopy lighting improvements on the south side of the building will need to be shielded to prohibit spillover to the abutting residential property. It is unclear from plans whether the lighting is cast directly downward or installed along the cheek wall of the stairs.

RECOMMENDED CONDITIONS

Staff does not find any conditions necessary for this request. As this is a public project, requirements for the project can be directed by the City Commission.

RECOMMENDED MOTIONS

Motion to [approve/approve with conditions/deny/continue to [specify date certain]] Conditional Use Permit No. 25112.

St. Pete Beach
The Sunset Capital of Florida

INFORMATION ON THE CONDITIONAL USE

What is a Conditional Use? A conditional use is a use that has operational, physical and other characteristics that may be different from those of the predominant permitted uses in a zoning district, but which is a use that compliments or may otherwise be compatible with the intended overall development within a district, provided the specified standards are met.

How do I apply for a Conditional Use? An applicant for conditional use must submit the following documents to the Community Development Department, based on the type of project proposed.

All Conditional Use Permits

- A complete and signed application. Incomplete applications will not be processed and will be returned. As such, all applicants are **STRONGLY ENCOURAGED** to meet with Community Development staff prior to submission deadlines to discuss plan submissions and the review process. Appointments can be made by calling 727.363.9229.
- A completed and signed agent authorization form if someone else will be representing the property owner at the public hearing.
- An accurate, legible, and appropriately scaled survey of the property including all existing and proposed improvements. The survey shall have been performed not more than one (1) year prior to the date of application and not less than two (2) 11"x17" copies of the survey are required for submittal.
- Two scaled conceptual site plans depicting the request. The site plans can be sized from 8.5"x11" to a maximum of 24"x36" in size. These drawings are necessary to assist staff and the BOA or City Commission in the review of the request. The site plans shall contain a matrix showing the site's preliminary compliance with the zoning district's dimensional and area requirements, which can be found in the Land Development Code (LDC) under the property's zoning district. The matrix shall a column listing the LDC requirements for setbacks, density (where applicable), intensity/FAR (where applicable), minimum lot area (where applicable) impervious surface ratio, and parking, with an additional column demonstrating how the plan will comply with those standards.
- When the application involves new building construction, additions or expansions, new placement of parking, a change of use, or other construction that triggers heightened landscaping requirements in LDC Sec. 22.7., 22.8, or 39.10, a preliminary landscaping plan shall be submitted that references the LDC requirement(s) for the affected area(s) of the site and the installation of landscaping to meet such requirement(s). The plan may show specific species, caliper and planting height if known, or provide a schedule of landscaping to be installed if the conditional use permit request is approved.
- Cash or check made payable to the City of St. Pete Beach for the amount of the application plus mailing fees. The application fee is $500. The mailing fee can be calculated for you when you turn in your application, or you can calculate it yourself by searching for your property on the Pinellas County Property

Appraiser's office website (www.pcpao.gov), clicking on radius search at the top of the page, typing in 500 feet for the radius, and multiplying the number of properties times the current stamp price plus $0.20.

- A completed Sign Posting Affidavit.
- Completed and filed lobbyist registration form(s), if relevant. Please submit these forms to the St. Pete Beach City Clerk's Office.
- Staff may request additional information, if necessary.

Applications for New Buildings, Expansions or Additions

In addition to the elements above, the following is required of all conditional use permits involving new building construction, or expansion of an existing building. This list is not comprehensive, and additional requests may be made to assess compatibility of the request with the Comprehensive Plan and Land Development Code.

- Elevations showing all sides of the building, in color, noting the following:
  - Height from grade to the top of the roof and top of the highest element of the structure, inclusive of elevator shaft overruns, antennae, mechanical equipment, covered rooftops, and similar non-habitable spaces.
  - Height from Base Flood Elevation to the top of the roof and top of the highest element of the structure.
  - For properties in the Community Redevelopment District, preliminary notation demonstrating the ability of the new building or addition to comply with the design objectives of LDC Sec. 39.7. and 39.8.
  - For properties in the Downtown Redevelopment District, preliminary notation demonstrating the ability of the new building or addition to comply with the design objectives of LDC Sec. 39.3, 39.7, and 39.8.
- When the project takes place within the Community Redevelopment District, a site plan shall be submitted noting the following. This can be depicted on the site plan required under the prior section if legible, or as a separate plan.
  - Streetscape and site design elements of LDC Sec. 39.10., 39.11., and 39.12., as well as LDC Sec 39.15. when the development abuts single-family, two-family, RU-1, or RU-2 zoned properties.
  - In addition to the preceding, any new buildings or additions within the Downtown Redevelopment District shall note compliance with the relevant elements of LDC Sec. 39.3. and 39.4. (where applicable).
- When the project is estimated to generate 51 or more peak hour trips based on the latest Institute of Transportation Engineers Parking Generation Manual or other professionally-accepted estimates, the applicant shall submit a transportation study methodology and draft transportation management plan (TMP) for review if requested by the City. Projects estimated to generate more than 300 peak hour trips are required to submit a transportation study methodology and TMP for review. Methodologies shall contain a table showing the expected traffic impact at peak hour for the new development.
- When the new building or addition exceeds 5,000 square feet, at least one rendering shall be provided showing the frontage of the building facing any public thoroughfare, and the rear of any building facing a public waterway or the beach. If the development site cannot be captured in one rendering, additional renderings shall be required to depict the new building(s) or addition(s) within the context of the entire development site.
- When the development is in the Community Redevelopment District and proposes a new building or is undergoing major renovation, an explanation of how the development will comply with the requirements of LDC Sec. 39.9.

- When the development is a multi-building project, or one with multiple uses in the same building, a preliminary site layout plan shall be provided identifying the uses provided within each building or portion thereof.
- A preliminary sign permit package, showing any proposed new signage for the property.

Applications for New and Expanded Temporary Lodging Developments

In addition to the elements in the preceding two sections, any new or expanded temporary lodging use shall provide the following. This list is not comprehensive, and additional requests may be made to assess compatibility of the request with the Comprehensive Plan and Land Development Code.

- Demonstration of compliance with the floor area standard of LDC Sec. 6.6.
- For properties in the Community Redevelopment District, demonstration of compliance with LDC Sec. 39.6.
- For large scale redevelopment projects in the Community Redevelopment District, site plan references to required beach walks, mean high water line easements, and any other public easement proffered under the development request.
- For large scale redevelopment projects in the Community Redevelopment District that contain at least one building exceeding 50 feet, a shade study at the equinox and solstices, showing at least one morning, afternoon and evening rendering.
- A to-scale dune installation or maintenance plan, where required.

Can I ask for Variance with my Conditional Use application? It is not uncommon for projects that require conditional use approval to also seek variance approvals. The City Commission is authorized to hear both types of request at the same time. Accordingly, variance requests may be included as part of the Conditional Use request. An additional application form is included in this packet for this purpose.

Who decides if the Conditional Use should be granted? The City Commission is authorized to hear and make final determinations on all conditional use requests. Conditional use applications may also include variance requests as part of a conditional use application. In those cases, the City Commission also makes the final determination.

What is the City Commission and when do they meet? The City Commission is the elected body of officials who have overall responsibility for establishing policies and procedures for the operations of the City of St. Pete Beach. The Commission meetings are normally held two times a month on the second and fourth Tuesday at 6:00pm, in the City Commission Chambers at 155 Corey Avenue (City Hall).

What do I do after my Conditional Use is granted? You will receive a notice from the City immediately following your hearing. This notice is called a Development Order (DO) and it will summarize the results of the hearing including the decision to deny, approve, or approve with conditions. If approved, the owner/applicant will have one (1) year from the date the development order is signed to obtain a building permit for the proposed work. The permit must remain active during the life of the project. If a permit is not obtained within a year or if a permit does not remain active, the conditional use will expire.

What happens if my approved Conditional Use is appealed? Although rare, sometimes a neighbor or other affected party will appeal the Commission decision to the Circuit Court. Any such appeal must be taken within 30-days from the date of the decision. Should this occur, the City is normally removed from the appeal process and has no control over the timeframe or decision of the Court. The one-year timeframe for permit issuance noted above would begin from the Court's final decision date provided the applicant has properly advised the City of said appeal.

What can I do if my Conditional Use is not granted? You may correct your plans to meet current code requirements or you may file an appeal to the Pinellas County Circuit Court with 30-days of the final decision.

How are my application fees used? The application fee is primarily used to cover staff review costs. A conditional use application will typically involve reviews from multiple City agencies and may include County, State, or even Federal reviews depending on the nature of the request. All conditional use applications are required to be properly advertised and require notification to adjacent property owners. The mailing fees are used offset the cost incurred in meeting these requirements including the preparation of a legal ad and mailing costs associated to adjacent property owner notice. The City shall re-advertise a request, at no expense to the applicant, if a scheduled application is not heard due to an error by the City (i.e. lack of a quorum). Otherwise, the applicant will be responsible for any additional costs incurred as a result of his or her own (in)action.

CONDITIONAL USE APPLICATION

Applicants must acknowledge understanding of the following. Initial each of the statements below. If you do not understand any of these, staff will explain them to you.

_____ I understand that the City will not accept or process an incomplete application.

_____ I understand that a non-conforming use or structure in a particular zoning district does not, in any way, provide justification for the granting of a conditional use. Furthermore, the existence of a permitted use or structure in adjacent districts does not constitute grounds for a conditional use.

_____ On all conditional uses, a majority vote is required. Action on this application by the City Commission may be continued to a later meeting.

_____ I understand that if a conditional use is approved by the City Commission, the applicant is required to obtain the appropriate building permits within 1 year from the date of the decision. If no permit is obtained within 1 year, the approval from the City Commission becomes voided.

_____ I understand that any person aggrieved by the final decision has the right to file a petition in the Pinellas County Circuit Court within 30 calendar days after the decision. Permits for construction may be granted prior to the expiration of this 30-day period, but an appeal will be grounds for revocation of the permit.

_____ I understand that I, as the applicant, or my authorized representative must be present at all scheduled public meetings on the application.

After acknowledgement of these conditions, complete the application form on the following pages

_____ 7/31/20

Signature of Applicant Date

St. Pete Beach
The Sunset Capital of Florida

CONDITIONAL USE APPLICATION

Case Number: _____

PROPERTY OWNER: City of St. Pete Beach

Name: City of St. Pete Beach

Address: 155 Corey Avenue

City: City of St. Pete Beach State: Florida

Zip: 33706 Telephone: 727-363-9232

Email: frobustelli@stpetebeach.org

APPLICANT/AGENT (Attach agent authorization form)

Name: Adam Poirrier

Address: 155 Corey Avenue

City: St. Pete Beach State: Florida

Zip: 33706 Telephone: 727-363-9804

Email: apoirrier@stpetebeach.org

SUBJECT PROPERTY:

Address: 8665 Boca Ciega Drive, St. Pete Beach, FL 33706 Current Name of Business: City of St. Pete Beach

Parcel ID: 25-31-15- 95202-000-0050 & 97686-000-0010 Name of Project: Pump Station No. 1 Rehabilitation

DETAILS OF THE REQUEST, INCLUDING APPLICABLE CODE SECTIONS AND ANY ASSOCIATED CASES (Add additional sheets if necessary):

This project involves the rehabilitation of the existing Master Pump Station No. 1 including but not limited to replacing four (4) existing 140 HP pumps with four (4) 215 HP pumps, a new diesel backup generator and generator platform, new odor control unit, electrical upgrades, site improvements and applicable site restoration.

Signature of Applicant/Agent

7/31/2025
Date

In order for an application for a conditional use to be approved or approved with conditions, the City Commission must make a positive finding with regard to each of the provisions below, pursuant to Division 4 of the City's Land Development (LDC). The applicant has the burden of proof demonstrating that the application for the conditional use complies with each of the requirements. Please explain in detail how your case meets these requirements (attach additional sheets if necessary):

1. LDC Sec 4.4(a)(1) Whether the conditional use is consistent with the goals, objectives, and policies of the Comprehensive Plan and any adopted special area plan.

2. LDC Sec 4.4(a)(2)a-d Whether the proposed use will be compatible with the character of the existing area, including existing structures and structures under construction, existing public facilities and public facilities under construction, and residential commercial and/or service facilities available within the existing area. More specifically:

   a. Whether the overall appearance and function of the area will be significantly affected. consideration shall be given to the existence of other uses in the area, based on the number, size, and location of the uses and the intensity and scale of the proposed and existing uses in the area;

   b. Whether the application will preserve any city, state, or federally designated historic, scenic, archaeological, or cultural resources (check with Community Development to determine historic resource status);

c. Whether the application will be compatible with adjacent development, if any, based on characteristics such as size, building style and scale, or whether such incompatibilities are mitigated through such means as screening, landscaping, setbacks, and other design features;

d. Whether the application will have significant adverse impacts on the livability and usability of nearby land due to noise, dust, fumes, smoke, glare from lights, late-night operations, odors, vehicular traffic, truck and other delivery trips, the amount, location, and nature of any outside activities, potential for increased litter, or privacy and safety issues;

3. Whether the transportation system is capable of adequately supporting the proposed use in addition to the existing uses in the area. Evaluation factors include street capacity and level of service, access to arterials, transit availability, on-street parking impacts, if any, site access requirements, neighborhood impacts, and pedestrian safety (a traffic study may be required);

4. Whether the minimum off-street parking area required and the amount of space needed for the loading and unloading of trucks, if applicable, will be provided and will function properly and safely (please provide current and proposed number of parking and loading spaces);

5. Whether generally, the public health, safety and welfare will be preserved, and any reasonable conditions necessary for such preservation have been made;

6. Whether the applicant has demonstrated the financial and technical capacity to complete any improvements and mitigation necessitated by the development as proposed and has made adequate legal provision to guarantee the provision of such improvements and mitigation; and,

7. The proposed use complies with all additional standards imposed on it by the particular provision of these regulations authorizing such use and by all other applicable requirements of the regulations of the City of St. Pete Beach.

Sec. 4.12 of the Land Development Code additionally requires conditional use applications within the community redevelopment district to be evaluated upon the extent to which the applicant can demonstrate that the following issues are addressed in a manner consistent with the policies established in the community redevelopment plan for the district and that no unreasonable or disproportionately negative impacts are imposed upon adjacent or nearby properties:

1. Utility infrastructure, including sanitary sewer, reclaimed water, potable water, electric and natural gas services, and data transmission and telecommunication services.

2. Transportation infrastructure, including ingress and egress from public right-of-way, traffic control devices and signalization, internal vehicle circulation of the site, design and function of parking areas, loading and unloading areas, pedestrian transit infrastructure and amenities, and public sidewalks and roadways.

3. Hydrological features and storm water management infrastructure.

4. Aesthetic and architectural features of the development, including site layout, physical dimensions of structures such as height and massing, design and appearance of building facades, exterior building materials, advertising and directional signage and the provision and maintenance of Gulf and Bay views and vistas.

5. Site landscaping, open space provision and impervious surface limitations.

6. Operational and functional requirements of facilities, including hours of operation, provision of required services or amenities, lighting requirements, noise abatement requirements, residency limitations and facilities maintenance.

7. Fire suppression and facility security.

8. Emergency management and hurricane evacuation provisions.

9. For temporary lodging uses taller than 50 feet in height or a density greater than 30 units per acre, the following additional issues shall be considered:

    a. The amount of separation provided between the proposed temporary lodging use and any existing buildings on adjoining properties and resulting impact on sunlight and views; and
    b. The proximity of any adjacent residential building to the Florida Coastal Construction Control Line and the degree to which the proposed temporary lodging use and/or any accessory use or structure maintains an open view of the waterfront from neighboring properties.

Technical Review Committee Deadlines

The TRC generally meets the 1st and 3rd Wednesday of each month at 10:00am in the Community Development Department conference room. All conditional use permit applications must be reviewed by the Technical Review Committee.

Meeting Month	Application Deadline	Meeting Date
	30 days prior to meeting date	At 10:00am in the TRC room
		Wednesday
January	12/9/2024	1/8/2025
	12/23/2024	1/22/2025
February	1/6/2025	2/5/2025
	1/20/2025	2/19/2025
March	2/3/2025	3/5/2025
	2/17/2025	3/19/2025
April	3/3/2025	4/2/2025
	3/17/2025	4/16/2025
May	4/7/2025	5/7/2025
	4/21/2025	5/21/2025
June	5/5/2025	6/4/2025
	5/19/2025	6/18/2025
July	6/2/2025	7/2/2025
	6/16/2025	7/16/2025
August	7/7/2025	8/6/2025
	7/21/2025	8/20/2025
September	8/4/2025	9/3/2025
	8/18/2025	9/17/2025
October	9/1/2025	10/1/2025
	9/15/2025	10/15/2025
November	10/6/2025	11/5/2025
	10/20/2025	11/19/2025
December	11/3/2025	12/3/2025
	11/17/2025	12/17/2025

St. Pete Beach
The Sunset Capital of Florida

Owner's Authorization for Agent

I/WE City of St. Pete Beach
(print name of property owner)

hereby authorize Adam Poirrier
(print name of agent)

to represent me/us in an application for Conditional Use Permit
(type of application: variance, conditional use, zoning, etc.)

Frances Robustelli
Frances Robustelli (Aug 6, 2025 09:41:17 EDT)
Signature of Owner

Signature of Owner

City of St. Pete Beach
Print Name of Owner

Print Name of Owner

The forgoing instrument was acknowledged before me on this 4th **day of** August **2025 , by Frances Robustelli who is personally known to me** _____ **or produced** _____ **identification.**

RITA BISHOP
Notary Public
State of Florida
Comm# HH670184
Expires 4/28/2029

8/4/2025

(Notary Signature) **(Date)**

My Commission Expires 04/28/2029

St. Pete Beach
The Sunset Capital of Florida

PUBLIC HEARING SIGN POSTING AFFIDAVIT

Applicant, City of St Pete Beach, agrees to post the sign(s) in a conspicuous place, at the principal access to the property, in full view of the public, and not more than five (5) feet from the nearest street right of way or easement a minimum of seven (7) days in advance of the Public Hearing and remain in place until the requested action has been heard and decided. Multiple sign postings shall not be more than three hundred (300) feet apart. If the subject parcel(s) abut more than one (1) street, notices shall be posted along each street. When the subject parcel(s) does not front a public road, the sign shall be posted at the point on a public road by which the property is, or can be, reached.

The sign shall be maintained in good readable condition by the applicant. If the said sign is destroyed, lost, or becomes unreadable, the applicant or applicant's representative shall obtain a replacement sign. Any sign posted in accordance with these requirements shall be removed from the property and disposed of by the applicant or applicant's agent not later than 24 hours following the final decision.

Applicant/Agent (must fill out agent authorization form):

Name(print): Adam Poirrier

Address: 155 Corey Avenue St. Pete Beach, FL 33707

7/31/2025

Signature *Date*

STATE OF FLORIDA)
) SS:
PINELLAS COUNTY)

The foregoing instrument was acknowledged before me this 31st day of July 20 25 by ADAM POIRRIER, who appeared before me, and is personally known to me, or has produced _____ as identification, and did take an oath.

My commission expires: 4/28/2029

NOTARY:

Print Name: Rita Bishop

Notary Public, State of Florida

(Notarial Seal)

RITA BISHOP
Notary Public
State of Florida
Comm# HH670184
Expires 4/28/2029

DEAR APPLICANT:

PLEASE COMPLETE THE ATTACHED AFFIDAVIT WHEN PUBLIC HEARING DATES HAVE BEEN DETERMINED FOR YOUR APPLICATION. PRESENT THE COMPLETED NOTARIZED AFFIDAVIT TO COMMUNITY DEVELOPMENT AND YOU WILL BE GIVEN THE SIGN(S) TO POST ON THE SUBJECT PROPERTY.

It is your responsibility to post the sign(s) in a conspicuous place, at the principal access to the property, in full view of the public, and not more than five (5) feet from the nearest street right of way or easement a minimum of seven (7) days in advance of the public hearing. The sign(s) must remain in place until the requested action has been heard and decided by the City Commission, Planning Board, Board of Adjustment, Historic Preservation Board or withdrawn. Multiple sign postings cannot be more than three hundred (300) feet apart. If the subject parcel(s) abut more than one (1) street, notices shall be posted along each street. When the subject parcel(s) does not front a public road, the sign shall be posted at the point on a public road by which the property is, or can be, reached.

You must maintain the sign(s) in good readable condition. If the said sign is destroyed, lost, or becomes unreadable, you or your representative shall obtain a replacement sign. Any sign posted in accordance with these requirements shall be removed from the property and disposed of by the applicant or applicant's representative not later than 24 hours following the final decision by the City Commission, Planning Board, Board of Adjustment, or Historic Preservation Board.

A Notary Public is available in City Hall; 155 Corey Avenue.

ANNUAL LOBBYIST REGISTRATION

FOR THE PERIOD JANUARY 1, ____ THRU DECEMBER 31, _____

Name _____ Phone _____ Email _____

Mailing Address _____

NAMES OF INDIVIDUAL LOBBYISTS (attach additional sheets if necessary):

1) Name _____
2) Name _____
3) Name _____
4) Name _____

Business Relationships: Does the Lobbying Firm or any of the Lobbyists listed above have any direct business association or partnership with any current member of the City Commission, City employee, or person sitting on a decision-making body (mark one)?

☐Yes ☐No

If "yes", attach documentation explaining the nature of each business relationship.

List any local campaign contributions and the amount(s):

_____

_____

LIST THE NAME AND BUSINESS ADDRESS OF EACH PRINCIPAL REPRESENTED, THEIR GENERAL AND SPECIFIC AREAS OF LEGISLATIVE INTEREST, AND THEIR POSITION ON SUCH AREA OF INTEREST.

(1) Name _____

Address _____

General Area of Legislative Interest: _____

Specific Area of Legislative Interest: _____

Position on Area of Interest: _____

(2) Name _____

Address _____

General Area of Legislative Interest: _____

Specific Area of Legislative Interest: _____

Position on Area of Interest: _____

(3) Name _____

Address _____

General Area of Legislative Interest: _____

Specific Area of Legislative Interest: _____

Position on Area of Interest: _____

(4) Name _____

Address _____

General Area of Legislative Interest: _____

Specific Area of Legislative Interest: _____

Position on Area of Interest: _____

(USE ADDITIONAL PAGES IF NECESSARY)

Be advised:

1) Completed forms may be scanned and emailed to cityclerk@stpetebeach.org, hand delivered, or mailed to the address below. For those submitting electronically, **registration does not become effective until all fees have been paid and the form has been reviewed and approved by staff.** Staff review will verify all required information has been provided and an effective date will be communicated to registrant.
2) This registration expires at 11:59 p.m. on December 31st. A new registration must be filed each year.
3) The registration fee is $50.00, in compliance with the City's Code of Ordinances.
4) A revised registration may be submitted throughout the year to add or remove principals and/or individual lobbyists. No charge is required to amend a registration throughout the year. If the general or specific area of legislative interest changes, written notification shall be filed with the City Clerk reflecting such amendments, and such notification shall be made prior to lobbying on any new subject.

By submission of this form, you are attesting that the firm and lobbyist(s) listed above have been retained to represent each principal listed above.

OATH

Under penalties of perjury, I declare that I have read the foregoing document and that facts stated in it are true.

Signature	Printed Name	Title	Date

Submit form with registration fee made payable to the City of St. Pete Beach.
Scanned forms may be emailed to cityclerk@stpetebeach.org
Notice: **Cash or Check ONLY**. Credit/Debit cards are not accepted.

City of St. Pete Beach City Clerk's Office Attn: City Clerk 155 Corey Avenue Ste. Pete Beach, FL 33706	Registration Fee Paid and Form Accepted: _____ Staff Initial

GENERAL AND SPECIFIC AREAS OF LEGISLATIVE INTEREST

When completing the registration form, registrants shall provide a response for both the "General" and "Specific" area of legislative interest, as required by City Code. Registrants are required to disclose both the "General" and "Specific" areas of legislative interest with sufficient specificity to permit a reasonable individual to clearly associate a lobbyist's activities to an issue disclosed on the lobbyist's registration form(s). If a lobbyist is representing a client on multiple issues, each issue must be disclosed separately, and the general & specific nature of each issue must be disclosed in such a manner to permit clear identification of each issue separate and apart from other issues listed on the registration forms. If necessary, the registrant should attach additional pages to their registration forms to clearly disclose all information required by the Lobbyist's Registration Ordinance.

Issue and Position

It is important to note that lobbyists are required to disclose their principal's position on an issue. In other words, lobbyists are required to state whether their principal is seeking the passage, defeat, withdrawal, etc. The registration form requires that the area of legislative interest and the position be sufficiently disclosed.

Registrations must also be updated timely to disclose any new/additional issues for which the lobbyist has been retained; registration forms must be updated prior to lobbying activities commencing.

Sufficient Disclosure

When lobbying on issues pertaining to a specific ordinance, resolution, planning department action, etc., the registrant shall refer to the specific identifier associated with the issue – i.e. ordinance no., resolution no., permit no., or other City-issued identifier associated with the subject matter. In most cases, this identifier, along with the issue's official City title, constitutes the "Specific' area of legislative interest.

On issues which lack a City issued identifier, the registrant must identify the issue with sufficient specificity to give public notice of the particular issue or proposal that is a subject of any communication that constitutes lobbying. This may be accomplished by identifying a specific property (street address or parcel ID) or by identifying a specific agenda item (meeting date, item no., title). For issues relative to real property, the "Specific" disclosure should clearly identify the exact location of the real estate.

With regards to the City budget, it is likely necessary to disclose a specific appropriation, funding topic, program, City department, or other unique element that pertains to the lobbying activities. Merely disclosing that lobbing activities pertain to "the budget" is too vague and, therefore, would constitute an insufficient disclosure.

Upon request, staff of the Clerk's Office will provide advice to registrants with regards to the "General" and "Specific" responses. Please contact our office if guidance is needed.

Ordinance 2022-04

AN ORDINANCE OF THE CITY OF ST. PETE BEACH, FLORIDA AMENDING THE CODE OF ORDINANCES, CHAPTER 2 – ADMINISTRATION, ARTICLE II - OFFICERS AND EMPLOYEES, DIVISION 2 - CODE OF ETHICS, ESTABLISHING SECTION 2-68 - DEFINITIONS; SECTION 2-69 - REGISTRATION OF LOBBYISTS; SECTION 2-70 – VALIDITY OF ACTION; SECTION 2-71 – RECORD KEEPING RESPONSIBILITIES; SECTION 2-72 – MAINTAINING REGISTRATIONS AND CONTACT LOGS; SECTION 2-73 – PROHIBITED CONDUCT OF CITY OFFICIALS AND EMPLOYEES; SECTION 2-74 – COMPLIANCE; PENALTIES, AND RESERVING SECTIONS 2-75 – 2-95; PROVIDING FOR CODIFICATION; CONFLICTS; SEVERABILITY; CORRECTION OF SCRIVENER'S ERROR; CONSTRUCTION; PUBLICATION; AND AN EFFECTIVE DATE.

WHEREAS, the City Commission of the City of St. Pete Beach wishes to establish registration and regulations for lobbying and lobbyists within the City.

WHEREAS, the Code of Ordinances Chapter 2, Article II, Division 2 "Code of Ethics" does not currently include any specific regulations related to lobbyists.

WHEREAS, the City Commission desires to establish a system to track lobbying activities to allow for greater transparency in City business.

WHEREAS, persons appearing before the City Commission, City staff, City boards, and City Committees benefit from having Lobbyist registration requirements that are consistent and uniform.

WHEREAS, the City Commission finds it in the best interest of its citizens to preserve and maintain the integrity of the members of the City Commission, board, committee and City employees.

NOW, THEREFORE, THE CITY COMMISSION OF THE CITY OF ST. PETE BEACH FLORIDA, HEREBY ORDAINS:

SECTION 1. Recitals. The above recitals ("Whereas" clauses) are hereby adopted as legislative findings, purpose and intent of the City Commission.

SECTION 2.

Chapter 2, Article II, Division 2 shall be amended as follows:

Sec. 2-68 – Definitions.

The following terms will be defined for this Section:

Lobbying –means communications, whether written or oral, by a lobbyist outside a duly noticed public meeting or hearing on the record with any member or members of the City Commission, or any member or members of any decision making body under the jurisdiction of the City Commission, or any City employee, whereby the lobbyist seeks to encourage or influence the passage, defeat, modification or repeal of any item which may be presented for vote before the City Commission, or any decision-making body under the jurisdiction of the City Commission, or which may be presented for consideration by a City employee as a recommendation to the City Commission or decision-making body.

Lobbyist – means all persons employed or retained, whether paid or not, by a principal who seeks to encourage the passage, defeat or modification of any ordinance, resolution, action or decision of any City Commissioner; any action, decision, recommendation of the City manager or any City boardor committee; or any action, decision or recommendation of any City personnel defined in any manner in this section, during the time period of the entire decision-making process on such action,decision or recommendation that foreseeably will be heard or reviewed by the City Commission, or a City board or committee. The term specifically includes the principal as well as any employee engaged in lobbying activities. The term "lobbyist" specifically excludes the following persons:

> i) Expert witnesses who provide only scientific, technical or other specialized information or testimony in public meetings; ii) any person who only appears as a representative of a neighborhood association without compensation or reimbursement for the appearance, whether direct, indirect or contingent, to express support of or opposition to any item; and iii) any person who only appears as a representative of a not-for-profit community based organization for the purpose of requesting a grant without special compensation or reimbursement for the appearance.

The persons specifically excluded above from the definition of "lobbyist" shall, prior to communicating with City personnel, disclose in writing to the City clerk, their name, address, and principal on whose behalf they are communicating.

Lobbying firm – means a business entity, including an individual contract lobbyist, that receives or becomes entitled to receive any compensation or the purpose of lobbying, where any partner, owner, officer, or employee of the business entity is a lobbyist.

Principal – means a person, firm, corporation, or other legal entity which has employed or retained a lobbyist.

Employee – means all persons employed directly or indirectly by the City of St. Pete Beach.

Decision-making body – means any board or committee established by the City Commission, City Manager and/or committee appointed by the City Manager.

Sec. 2-69 – Registration of lobbyists.

All lobbyists, as defined herein, shall register with the City Clerk on an annual basis, January 1 each year, including the payment of a $50.00 fee, or as amended in Appendix A in the City's Code of Ordinances, prior to engaging in any lobbying. Registration shall be updated to add or withdraw principals and/or individual lobbyists before a lobbyist commences lobbying on behalf of any new principal. If the general or specific area of legislative interest changes, written notification shall be filed with the City Clerk reflecting such amendments, and such notification shall be made prior to lobbying on any new subject.

Each lobbyist shall be required to register on forms prepared by the City Clerk. The lobbyist shall state under oath his or her name, business address, the name and business address of each principal represented, that the principal has actually retained the lobbyist, the general and specific areas of legislative interest, position on such legislative interest, and the nature and extent of any direct business association or partnership with any current member of the City Commission, City employee, or person sitting on a decision-making body. Each lobbying firm may register in the name of such firm, corporation, or legal entity, provided the registration shall list the names of all persons who engage in lobbying as defined in this article. Failure to register, or providing false information in the lobbyist registration form, shall constitute a violation of this Ordinance.

Sec. 2-70 – Validity of action.

The validity of any decision, action, recommendation, or determination made by the City Commission, board, committee, or employee shall not be affected by the failure of any person to comply with the provisions of this Ordinance.

All members of the City Commission, boards, committees, and City employees shall be diligent to ascertain that a person required to register pursuant to this Ordinance have complied, and if necessary, request a record of compliance from the City Clerk.

Sec. 2-71 – Record keeping responsibilities.

City Commissioners, board members, committee members, and City employees, as defined in this Section shall be responsible for maintaining a written log, in the form established by the City Clerk, which documents each oral lobbying communication or meeting. The written log shall be on a form as prepared by the City Clerk. The log shall, at a minimum, reflect the name of the lobbyist, the date of the contact, whether telephone or in person oral contact, and the subject matter discussed.

City Commissioners, board members, committee members, and City employees shall deliver their logs to the City Clerk's Office at the end of each quarter and at the conclusion of their final term in office. City employees must deliver their logs to the City Clerk at the end of

each quarter and upon the conclusion of their employment with the City.

Sec. 2-72 – Maintaining registrations and contact logs.

The City Clerk shall accept and maintain the annual lobbyist registrations and the quarterly log of lobbyist contacts, which shall be open for public inspection.

Sec. 2-73 – Prohibited conduct of city officials and employees.

No member of the City Commission, board, committee or employee of the City shall solicit or accept as compensation, payment, favor, service, or thing of value from a lobbyist or principal when such member of the City Commission, board, committee or employee knows, or with the exercise of reasonable care, should know, that it was given to influence a vote or recommendation favorable to the lobbyist or principal.

No member of the City Commission or employee of the City shall appear before the City Commission for compensation for two years from the date he or she leaves the City Commission or City employment.

Sec. 2-74 – Compliance; penalties.

The City Clerk shall monitor lobbyists for compliance with this section and shall develop procedures for suspension of lobbyists until compliance is attained. The City Clerk will alert the City Commission to any instances of non-compliance and will inform the City Commission of any need to institute progressive penalties for repeat offenders.

The penalties for an intentional violation of this Ordinance more than once in a twelve-month period are as follows:

1) Second violation shall result in prohibition from lobbying for one year; and
2) Third violation shall result in prohibition from lobbying for two years.

Sec. 2-75 – Sec. 2-95 – Reserved.

SECTION 3. Codification. This Ordinance shall be codified in the Code of Ordinance of the City of St. Pete Beach.

SECTION 4. Conflicts. All ordinances or parts of ordinances, in conflict herewith are hereby repealed to the extent of any conflict with the Ordinance.

SECTION 5. Severability. The provisions of this Ordinance are declared to be severable, and if any section, sentence, clause or phrase of this Ordinance shall for any reason be held to be invalid or unconstitutional, such decision shall not affect the validity of the remaining sections, sentences, clauses, and phrases of this Ordinance as they shall remain in effect, it being the legislative intent that this Ordinance shall stand notwithstanding the invalidity of any part.

SECTION 6. Scrivener's Error. The City Attorney may correct scrivener's errors found in this Ordinance by filing a corrected copy of this Ordinance with the City Clerk.

SECTION 7. Construction. This Ordinance is to be liberally construed to accomplish its objectives.

SECTION 8. Publication. This Ordinance shall be published in accordance with the requirements of law.

SECTION 9. Effective Date. This ordinance shall take effect on September 1, 2022.

FIRST READING:	**January 25, 2022**
PUBLISHED:	**February 9, 2022**
SECOND READING:	**February 22, 2022**
PUBLIC HEARING:	**February 22, 2022**

CITY COMMISSION, CITY OF ST. PETE BEACH, FLORIDA.

Alan Johnson, Mayor

I, Amber LaRowe, City Clerk of the City of St. Pete Beach, Florida, do hereby certify that the foregoing Ordinance was duly adopted in accordance with the provisions of applicable law this 22 day of February, 2022.

Amber LaRowe, City Clerk

APPROVED AS TO FORM AND LEGAL SUFFICIENCY:

Andrew Dickman, City Attorney

SKM_C450i25073111090

Final Audit Report 2025-08-06

Created:	2025-08-03
By:	Rita Bishop (rbishop@stpetebeach.org)
Status:	Signed
Transaction ID:	CBJCHBCAABAAxiZpl-x6-zdaRx_iRiAdEjNeVVgHCAQe

"SKM_C450i25073111090" History

Document created by Rita Bishop (rbishop@stpetebeach.org)
2025-08-03 - 11:51:10 PM GMT

Document emailed to Frances Robustelli (frobustelli@stpetebeach.org) for signature
2025-08-03 - 11:51:15 PM GMT

Email viewed by Frances Robustelli (frobustelli@stpetebeach.org)
2025-08-03 - 11:51:21 PM GMT

Document e-signed by Frances Robustelli (frobustelli@stpetebeach.org)
Signature Date: 2025-08-06 - 1:41:17 PM GMT - Time Source: server

Agreement completed.
2025-08-06 - 1:41:17 PM GMT

Adobe Acrobat Sign

Brandon Berry

From: Camden Mills
Sent: Thursday, August 14, 2025 8:19 PM
To: Brandon Berry
Subject: FW: SPB Pump Station No. 1 Rehab - Conditional Use Permit Application
Attachments: Pump Station 1 Rehab - Phase II Plans.pdf

Please see responses below on the CUP application. Let me know if you'd like to discuss.

Thanks,

Camden J. Mills, P.E.
Director of Public Services
St. Pete Beach, FL 33706
(727) 363-9254

From: Matheny, Kyle <Kyle.Matheny@kimley-horn.com>
Sent: Thursday, August 14, 2025 5:17 PM
To: Camden Mills <cmills@stpetebeach.org>
Cc: Alderman, Brandon <Brandon.Alderman@kimley-horn.com>; Kristin Coman <kcoman@stpetebeach.org>; Brian Peckins <bpeckins@stpetebeach.org>
Subject: RE: SPB Pump Station No. 1 Rehab - Conditional Use Permit Application

CAUTION: This message has originated from **Outside of the Organization. Do Not Click** on links or open attachments unless you are expecting the correspondence from the sender and know the content is safe

Camden,

Please see the draft responses below:

For 2.c., are there any plans to screen the tanks in particular with landscaping or otherwise?
Landscaping and irrigation was removed from the project as part of the value engineering. It was decided that the landscaping and irrigation would be completed by the City upon completion of Phase I as part of the Phase II improvements attached.

2.d. pertaining to noise and late night operation from the generator is relevant. Do we know how frequently it exercises and at what decibel?
It's typical to exercise the generator at minimum once a month. The emergency backup generator will be installed in an enclosure with a sound attenuation level of 25 dB(A) reduction at 1 meter (roughly 90 decibels equivalent to a lawn mower).

Hope this helps,

Let me know if you have any questions.
Kyle Matheny, P.E.
Kimley-Horn | 200 Central Avenue, Suite 600, St. Petersburg, FL 33701
Direct: 727 498 2560

From: Brandon Berry <bberry@stpetebeach.org>
Sent: Wednesday, August 6, 2025 9:57 PM
To: Camden Mills <cmills@stpetebeach.org>
Cc: Kristin Coman <
Subject: RE: SPB Pump Station No. 1 Rehab - Conditional Use Permit Application

Camden,

I can take this in for TRC, but I think it might be better to schedule for 9/3 instead of 8/20 if you don't mind.

Some of the questions are relevant. Everything in Sec. 4.12. doesn't apply here, but 2.d. pertaining to noise and late night operation from the generator is relevant. Do we know how frequently it exercises and at what decibel? For 2.c., are there any plans to screen the tanks in particular with landscaping or otherwise?

From: Camden Mills <cmills@stpetebeach.org>
Sent: Wednesday, August 6, 2025 3:14 PM
To: Brandon Berry <bberry@stpetebeach.org>
Cc: Kristin Coman <kcoman@stpetebeach.org>; Brian Peckins <bpeckins@stpetebeach.org>
Subject: RE: SPB Pump Station No. 1 Rehab - Conditional Use Permit Application

Brandon,

Please see attached. Signed application is included. Let me know if you need anything further.

Thanks,

Camden J. Mills, P.E.
Director of Public Services
St. Pete Beach, FL 33706
(727) 363-9254

From: Brandon Berry <bberry@stpetebeach.org>
Sent: Wednesday, July 30, 2025 1:41 PM
To: Camden Mills <cmills@stpetebeach.org>
Cc: Kristin Coman <kcoman@stpetebeach.org>; Brian Peckins <bpeckins@stpetebeach.org>
Subject: RE: SPB Pump Station No. 1 Rehab - Conditional Use Permit Application

Camden,

Once City Manager signs just include that and I will move it forward.

When does this need to be approved by Commission?

Thanks,
Brandon

From: Camden Mills <cmills@stpetebeach.org>
Sent: Wednesday, July 30, 2025 1:01 PM
To: Brandon Berry <bberry@stpetebeach.org>
Cc: Kristin Coman <kcoman@stpetebeach.org>; Brian Peckins <bpeckins@stpetebeach.org>
Subject: FW: SPB Pump Station No. 1 Rehab - Conditional Use Permit Application

Hey Brandon,

I think we're almost ready to submit the CUP application for the pump station 1 project. Attached are the following documents:

1. Pump Station 1 Rehab – Site Renderings 1 of 2
2. Pump Station 1 Rehab – Site Renderings 2 of 2
3. Pump Station 1 Rehab – Issued for Construction Plans (Phase 1)
4. Pump Station 1 Rehab – Conditional Use Permit Application
    a. City to fill out/sign page 5 & 6 of the application. **Should City Manager sign as the applicant?**
    b. Responses are included on pages 7-9 for review.
    c. Public Hearing Sign Posting Affidavit, page 13-14, to be signed and notarized when public hearing dates are determined.

How should we proceed with formal submittal?

Thanks,

Camden J. Mills, P.E.
Director of Public Services
St. Pete Beach, FL 33706
(727) 363-9254

The city of St. Pete Beach uses SeeClickFix for residents to submit issues to the city. To report an issue, please click here.

All government correspondence is subject to the public records laws.

ISSUED FOR CONSTRUCTION PLANS
FOR
CITY OF ST. PETE BEACH
PUMP STATION 1 REHABILITATION
PHASE 1 IMPROVEMENTS
CITY OF ST. PETE BEACH, FLORIDA

SECTION 25, TOWNSHIP 31 SOUTH, RANGE 15 EAST

8665 BOCA CIEGA DRIVE
ST. PETE BEACH, FL 33706

St. Pete Beach
The Sunset Capital of Florida

PROJECT TEAM:

OWNER:
CITY OF ST. PETE BEACH
155 COREY AVE
ST. PETE BEACH, FLORIDA 33706
CONTACT: BRETT WARNER, P.E.
727.363.9254

ENGINEER:
KIMLEY-HORN AND ASSOCIATES, INC.
200 CENTRAL AVENUE, SUITE 600
SAINT PETERSBURG, FL 33701
CONTACT: SHELBY HUGHES, P.E.
727.498.2585

ELECTRICAL:
THOMAS ENGINEERING
777 S. HARBOUR ISLAND BLVD, SUITE 350
TAMPA, FL 33620
CONTACT: TIMOTHY THOMAS, P.E.
813.227.9190

SURVEYOR:
HYATT SURVEY SERVICES, INC.
2012 LENA ROAD
BRADENTON, FL 34211
CONTACT: JOHN MATTHEWS
941.748.4693

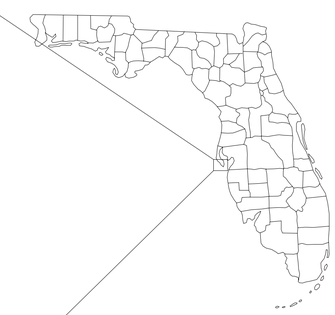

UTILITY CONTACTS:

CHARTER COMMUNICATIONS
4145 FALKENBURG RD.
RIVERVIEW, FL 33578
CONTACT: JEREMY CORNETTE
863-581-5734

DUKE ENERGY
452 EAST CROWN POINT RD.
WINTER GARDEN, FL 34787
CONTACT: VIVIAN CASTRO-CINTRON
407-504-7330

FRONTIER COMMUNICATIONS
3712 WEST WALNUT ST.
TAMPA, FL 33607
CONTACT: TONI CANNON
813-875-1014

PINELLAS COUNTY UTILITIES - WATER AND RECLAIMED
14 SOUTH FORT HARRISON AVE.
CLEARWATER, FL 33756
CONTACT: JAY PERKINS
727-464-3536

UNITI FIBER
200 CUMBERLAND DR.
ST. AUGUSTINE, FL 32095
CONTACT: CHARLIE CROFT
251-214-7059

TECO PEOPLE'S GAS
8416 PALM RIVER RD.
TAMPA, FL 33619
CONTACT: JOAN DOMNING
813-275-3783

PREPARED BY
Kimley»Horn

© 2023 KIMLEY-HORN AND ASSOCIATES, INC.
200 CENTRAL AVENUE, SUITE 600
ST. PETERSBURG, FL 33701
PHONE (727) 547-3999
WWW.KIMLEY-HORN.COM REGISTRY NO. 35106

811
Know what's below.
Call before you dig.

No.	Revisions	Date	By
1	IFC REVISION NO. 1	08/20/2024	SNH

Kimley»Horn

© 2023 KIMLEY-HORN AND ASSOCIATES, INC.
200 CENTRAL AVENUE, SUITE 600
ST. PETERSBURG, FL 33701
P: 727 547 3999
WWW.KIMLEY-HORN.COM REGISTRY NO. 35106

DESIGN ENGINEER:
SHELBY N. HUGHES, P.E.
FL LICENSE NUMBER
86419
DATE:

SCALE: N.T.S.
DESIGN: SNH
DRAWN: AJO
CHECKED: SAE

COVER SHEET

CITY OF ST. PETE BEACH
PUMP STATION 1 REHABILITATION
PINELLAS COUNTY FLORIDA

DATE:
AUGUST 2024

PROJECT NO.
148404075

SHEET NUMBER
G-1

GENERAL NOTES

1. LOCATIONS, ELEVATIONS, AND DIMENSIONS OF EXISTING UTILITIES, STRUCTURES, AND OTHER FEATURES ARE SHOWN ACCORDING TO THE BEST INFORMATION AVAILABLE AT THE TIME OF PREPARATION OF THESE PLANS, BUT DO NOT PURPORT TO BE ABSOLUTELY CORRECT OR COMPLETE. PRIOR TO CONSTRUCTION, THE CONTRACTOR SHALL VERIFY AND AGREE TO BE FULLY RESPONSIBLE FOR ANY AND ALL DAMAGES WHICH MIGHT BE OCCASIONED BY HIS FAILURE TO EXACTLY LOCATE AND PRESERVE ANY AND ALL EXISTING UTILITIES, STRUCTURES, AND OTHER FEATURES AFFECTING HIS WORK. ANYTHING NOT SHOWN ON THESE DRAWINGS SHOULD BE BROUGHT TO THE ATTENTION OF THE ENGINEER AND SHALL NOT CONSTITUTE AN EXTRA EXPENSE, UNLESS APPROVED BY THE OWNER. THE CONTRACTOR SHALL NOTIFY THE RESPECTIVE UTILITY COMPANIES NO LATER THAN 2 FULL BUSINESS DAYS PRIOR TO COMMENCING WORK IN A SPECIFIC AREA. THE CONTRACTOR SHALL BE RESPONSIBLE FOR THE VERIFICATION OF ALL UTILITIES LOCATIONS WITHIN THE WORK AREA.
2. THE CONTRACTOR SHALL CONTACT THE ENGINEER IMMEDIATELY CONCERNING ANY CONFLICTS ARISING DURING CONSTRUCTION OF ANY IMPROVEMENTS SHOWN ON THESE DRAWINGS.
3. SHOP DRAWINGS SHALL BE FURNISHED TO THE ENGINEER FOR REVIEW OF ALL PIPE CONNECTIONS, TRANSITIONS, AND SPECIAL MATERIALS PRIOR TO FABRICATION OR DELIVERY TO THE JOB SITE.
4. ALL ROADWAYS, CURBS, SIDEWALKS, LAWNS, LANDSCAPING, MAILBOXES, SIGNS, ETC. DISTURBED DURING THE WORK SHALL BE RESTORED TO A CONDITION EQUAL TO THAT EXISTING PRIOR TO CONSTRUCTION AND/OR AS SHOWN ON THE DRAWINGS AND SPECIFICATIONS. CURB, DRIVEWAY, SIDEWALK REPLACEMENT AND ASPHALT SHALL BE IN ACCORDANCE WITH FDOT STANDARD PLANS AND SPECIFICATIONS.
5. ALL JOINTS WHERE REQUIRED SHALL BE RESTRAINED IN ACCORDANCE WITH THE SPECIFICATIONS AND AS SHOWN ON THE DRAWINGS. CONCRETE REACTION BLOCKS WILL NOT BE APPROVED IN LIEU OF RESTRAINED JOINTS UNLESS DIRECTION BY THE ENGINEER AND OWNER.
6. THE CONTRACTOR SHALL CONFINE WORK WITHIN THE LIMITS OF EXISTING RIGHTS-OF-WAYS AND LIMITS OF CONSTRUCTION AS SHOWN ON THE DRAWINGS.
7. CONTRACTOR SHALL PROVIDE MAINTENANCE OF TRAFFIC IN ACCORDANCE WITH THE SPECIFICATIONS.
8. CONTRACTOR SHALL CONTACT MR. BRETT WARNER, PUBLIC SERVICES DEPARTMENT (727) 363-9254 TO COORDINATE THE SHUTDOWN OF ANY EXISTING LIFT STATION.
9. THE CONTRACTOR SHALL NOTIFY THE RESPECTIVE PROPERTY OWNERS A MINIMUM OF 24 HOURS IN ADVANCE OF ANY AND ALL WORK REQUIRING DISRUPTION IN SERVICE TO ANY BUSINESS OR RESIDENCE SHALL NOT EXCEED 2 HOURS FOR WATER AND 4 HOURS FOR SANITARY SEWER SERVICE. ACCESS TO PROPERTY SHALL BE MAINTAINED AT ALL TIMES.
10. PROPERTY MARKERS SHALL BE PROTECTED BY THE CONTRACTOR, THE CONTRACTOR'S REGISTERED SURVEYOR SHALL REPLACE ANY MARKERS THAT ARE DISTURBED.
11. THE CONTRACTOR SHALL PROVIDE AND IMPLEMENT SITE SPECIFIC EROSION AND SEDIMENT CONTROL PROCEDURES SUCH AS HAY BALES OR SILT SCREENS, OR OTHER APPROVED METHODS AS REQUIRED, TO PREVENT THE TRANSPORT OF SEDIMENT DOWNSTREAM INTO STREETS, STORM SEWERS, DITCHES, PONDS, ETC.
12. ALL EXISTING TRAFFIC SIGNS WITHIN THE PROPOSED CONSTRUCTION LIMITS ARE TO BE PROTECTED BY THE CONTRACTOR. CAUTION SHOULD BE EXERCISED WHILE RELOCATING EXISTING SIGNS WHERE DIRECTED. IF THE SIGNS ARE DAMAGED BEYOND USE, AS DETERMINED BY THE ENGINEER, SIGNS SHALL BE REPLACED BY THE CONTRACTOR AT HIS EXPENSE.
13. THE CONTRACTOR SHALL ADJUST (AS REQUIRED) PIPELINE ALIGNMENTS HORIZONTALLY AND/OR VERTICALLY TO AVOID CONFLICTS WITH ACTUAL FIELD CONDITIONS AS UNCOVERED DURING CONSTRUCTION. FIELD ADJUSTMENT SHALL BE COORDINATED WITH, AND REVIEWED BY, THE ENGINEER.
14. THE CONTRACTOR SHALL PROVIDE ALL DEWATERING EQUIPMENT NECESSARY TO KEEP EXCAVATIONS DRY AND SHALL PROVIDE ALL SHORING, SHEETING, AND BRACING NECESSARY TO PROTECT WORKMEN, ADJACENT STRUCTURES, UTILITIES, EXISTING PAVEMENT, OR TO MINIMIZE TRENCH WIDTH AT NO ADDITIONAL COST.
15. EXISTING PUMPS AND PUMP RAILS ARE TO BE SALVAGED AND DELIVERED BY CONTRACTOR TO CITY OF ST. PETE BEACH PUBLIC SERVICE YARD.
16. THE CONTRACTOR SHALL PROTECT ALL EXISTING STRUCTURES, STORM DRAINS, SEWERS, UTILITIES, AND OTHER FACILITIES IN THE CONSTRUCTION AREA. THE CONTRACTOR SHALL REPAIR ANY DAMAGES DUE TO HIS CONSTRUCTION.
17. WHERE IT IS NECESSARY TO DEFLECT PIPE EITHER HORIZONTALLY OR VERTICALLY, PIPE JOINT DEFLECTION SHALL NOT EXCEED 75% OF THE MANUFACTURERS' MAXIMUM RECOMMENDED DEFLECTION.

WETWELL NOTES

1. EXISTING WETWELL SHALL BE DRAINED AND CLEANED. CONTRACTOR SHALL BE RESPONSIBLE FOR DISPOSAL OF ALL EQUIPMENT.
2. ALL EXPOSED DUCTILE IRON FITTINGS ARE TO BE FLANGED. ALL BURIED PIPE AND FITTING SHALL BE MECHANICAL JOINT.
3. SEE SITE PLAN FOR CORRECT ORIENTATION OF PIPES, VENTS, AND OTHER FIXTURES.
4. THE CONTRACTOR SHALL COORDINATE PLACEMENT OF ACCESS COVERS WITH THE PUMP MANUFACTURER TO ENSURE THAT PROPER CLEARANCES ARE ATTAINED.
5. WETWELL AND VALVE VAULT ACCESS HATCHES SHALL BE FLOOD-TIGHT.
6. WETWELL ACCESS HATCHES SHALL INCLUDE FALL PROTECTION.

PUMP INSTALLATION NOTES

1. TEST BY WIRING ALL WIRES AND MOTORS. READINGS SHALL BE 20 MEGA-OHMS OR MORE TO GROUND. (DO NOT MEGGER LOW VOLTAGE CONTROLS)
2. OPERATE PUMPS, CHECK DIRECTION, RECORD VOLTAGE AND AMPERAGE WITH EACH AND BOTH RUNNING. ALL WORK TO BE COMPLETED WITH THE SUPPLIER'S FIELD REPRESENTATIVE PRESENT.
3. ALL CABLES GOING TO WETWELLS SHALL BE CONTINUOUS WITH NO SPLICES.
4. CABLES FOR PUMP MOTORS SHALL BE SUFFICIENT LENGTH TO ALLOW PUMP MOTORS TO BE REMOVED FOR SERVICING.

UTILITY NOTES

1. THE CONTRACTOR SHALL BE RESPONSIBLE FOR COORDINATING WITH JURISDICTIONAL BODIES AND UTILITY COMPANIES LISTED ON THE COVER OF THESE PLANS.
2. ALL BELOW GROUND DUCTILE IRON PIPE AND FITTINGS SHALL BE ENCASED IN A POLYETHYLENE WRAP IN ACCORDANCE WITH AWWA STANDARDS.
3. ALL VALVE BOX COVERS SHALL BE PAINTED TO INDICATE THEIR TYPE OF SERVICE.
4. ALL TEST POINT TAPPING SHALL BE CUT LOOSE FROM THE CORPORATION STOP AND COMPLETELY REMOVED AND DISPOSED OF BY THE CONTRACTOR PRIOR TO FINAL ACCEPTANCE. THE CORPORATION STOP SHALL BE CAPPED AND REMAIN IN PLACE,
5. ADJUST EXISTING MANHOLE FRAMES AND COVERS TO MATCH FINAL GRADE.

SEQUENCE OF CONSTRUCTION NOTES

1. CONTRACTOR TO SUBMIT A BYPASS PLAN TO THE ENGINEER FOR REVIEW PRIOR TO PLACING THE BYPASS SYSTEM INTO SERVICE. CONTRACTOR SHALL BE RESPONSIBLE FOR MAINTENANCE OF TRAFFIC, COST OF SETTING UP BYPASS SYSTEM, MAINTAINING THE SYSTEM, REMOVAL OF SYSTEM , AND REMOVAL OF ANY WASTE COLLECTED.
2. CONTRACTOR SHALL COORDINATE WITH DUKE ENERGY TO SECURE TEMPORARY POWER FOR BYPASS SYSTEM. CONTRACTOR SHALL PROVIDE A DIESEL-POWERED BYPASS PUMP AS A BACKUP.
3. BYPASS SYSTEM SHALL MEET CITY OF ST. PETE BEACH NOISE ORDINANCE.
4. AFTER BYPASS SYSTEM HAS BEEN REVIEWED AND IS IN OPERATION, CONTRACTOR SHALL BEGIN REPLACEMENT OF THE EXISTING EQUIPMENT AND PIPING AS DELINEATED.
5. CONTRACTOR SHALL TEST THE NEW FACILITY AND RESTORE THE SITE TO PRE EXISTING CONDITION ONCE ALL TESTS ARE COMPLETED.
6. BYPASS SHALL NOT BE REMOVED UNTIL CLEARANCE THROUGH FDEP IS RECEIVED.

DEMOLITION NOTES

1. CONTRACTOR SHALL FIELD VERIFY EXISTING CONDITIONS PRIOR TO BEGINNING CONSTRUCTION AND ORDERING EQUIPMENT. CONTRACTOR SHALL NOTIFY ENGINEER OF DISCREPANCIES.
2. CONTRACTOR SHALL TAKE ALL PRECAUTIONARY MEASURES NECESSARY TO PROTECT EXISTING EQUIPMENT, UTILITIES, STRUCTURES, AND PERSONNEL FROM DAMAGE OR INJURY DURING CONSTRUCTION.
3. ALL EXISTING MECHANICAL PIPING AND EQUIPMENT SHALL BE REMOVED AND SALVAGED PER THE CONTRACT DOCUMENTS.
4. CONTRACTOR IS RESPONSIBLE FOR DISPOSAL OF DEMOLISHED MATERIAL. DISPOSAL SHALL BE IN ACCORDANCE WITH ALL LOCAL, STATE AND FEDERAL REGULATIONS.
5. PRESSURE WASH AND CLEAN WETWELL ONCE EQUIPMENT IS REMOVED.

WORK ZONE TRAFFIC CONTROL GENERAL NOTES

1. ALL WORK ZONE TRAFFIC CONTROL (WZTC) DEVICES SHALL BE INSTALLED PRIOR TO COMMENCEMENT OF CONSTRUCTION AND SHALL BE PROPERLY MAINTAINED AND OPERATED THROUGHOUT THE PERIOD OF EACH PHASE / STAGE CONSTRUCTION. ALL TEMPORARY SIGNS, PAVEMENT MARKINGS, WARNING DEVICES, ETC. NECESSARY FOR THE WZTC SHALL CONFORM TO THE MANUAL OF UNIFORM TRAFFIC CONTROL DEVICES (LATEST ADDITION) AND THE FDOT STANDARD PLANS (LATEST ADDITION)
2. THE EXISTING POSTED SPEED LIMITS WILL BE MAINTAINED UNLESS OTHERWISE NOTED IN THE PLANS.
3. THE CONTRACTOR SHALL MAINTAIN ALL EXISTING PEDESTRIAN OR BICYCLIST TRAFFIC, WHEN AN EXISTING PATH ACCESSIBLE PATH IS LOCATED WITHIN THE WZTC PROJECT LIMITS, AT ALL TIMES DURING THE CONSTRUCTION PROCESS, THE CONTRACTOR SHALL BE RESPONSIBLE FOR ENSURING THAT A SAFE AND UNOBSTRUCTED ACCESSIBLE PATH EXISTS FOR PEDESTRIANS OR BICYCLISTS. REFER TO STANDARD PLANS INDEX 102-660.0
4. EXISTING SIGNS SHALL BE MAINTAINED AT ALL TIMES. DURABLE OPAQUE SHEET OVERLAY PANELS SHALL BE USED TO COVER INAPPROPRIATE INFORMATION ON NEW OR EXISTING SIGNS WHERE REQUIRED BY THE ENGINEER. THE PANEL SHALL BE PLACED IN A MANNER THAT DOES NOT DAMAGE THE EXISTING SIGN. NO FABRIC OR PLASTIC FILM WILL BE ALLOWED.
5. ALL REFLECTIVE PAVEMENT MARKINGS, EXISTING AND TEMPORARY, SHALL BE MAINTAINED DURING CONSTRUCTION UNLESS NOTED OTHERWISE.
6. FOR DROP OFFS IN WORK ZONES THE CONTRACTOR IS DIRECTED TO THE REQUIREMENTS OF STANDARD PLANS INDEX NO. 102-600. THE CONTRACTOR SHALL ONLY EXCAVATE OR MILL AN AREA THAT CAN BE BROUGHT BACK WITHIN THE DROP-OFF CRITERIA OF STANDARD PLANS INDEX NO. 102-600 WITHIN THE SAME DAY / NIGHT OPERATION. (FOR CLEAR ZONE WIDTHS FOR WORK ZONES, SEE STANDARD PLANS INDEX NO. 102-600). ALL TRENCHES SHALL BE BACKFILLED COMPLETELY TO PROVIDE SAFE CROSSING BY THE END OF EACH WORK DAY OR WHENEVER THE WORK ZONE BECOMES INACTIVE.
7. WHENEVER CONSTRUCTION EQUIPMENT IS BEING DRIVEN OR TRANSPORTED ON THE OPEN TRAVEL LANES, THE CONTRACTOR SHALL UTILIZE STANDARD PLANS INDEX NO. 102-619
8. THE CONTRACTOR SHALL MAINTAIN PROPER DRAINAGE FOR ALL PHASES OF CONSTRUCTION ADDITIONAL DETAILS AND STRUCTURES NOT SHOWN IN THE WZTC PLANS MAY BE NECESSARY DEPENDING UPON CONTRACTOR METHODS OF CONSTRUCTION.

LEGEND

EXISTING	
PROPOSED	
DEMOLITION	
PROPERTY BOUNDARY	
EX. ASPHALT PAVEMENT	
EX. CONCRETE SURFACE	
PROP. CONCRETE SURFACE	
PROP. FLANGED PIPE FITTING	
PROP. MECHANICAL JOINT FITTING	
DEMOLITION	
DEMOLITION	
DEMOLITION	
ABANDON IN PLACE	

SHEET INDEX

DISCIPLINE	DRAWING	TITLE
GENERAL	G-1	COVER SHEET
GENERAL	G-2	GENERAL NOTES
SURVEY	SH. 1 OF 1	SURVEY
CIVIL	C-0.1	SOIL BORING LOG
CIVIL	C-1	SWPP NOTES
CIVIL	C-2	SWPP PLAN
CIVIL	C-3	SWPP DETAILS
CIVIL	C-4	DEMOLITION PLAN
CIVIL	C-5	SITE PLAN
CIVIL	C-6	GRADING AND DRAINAGE PLAN
CIVIL	C-7	YARD PIPING PLAN
CIVIL	C-8	PHASING PLAN - PHASE 1
CIVIL	C-9	PHASING PLAN - PHASE 2
CIVIL	C-10	PHASING PLAN - PHASE 3
CIVIL	C-11	CIVIL DETAILS
CIVIL	C-12	CIVIL DETAILS
MECHANICAL	M-1	MECHANICAL PLAN
MECHANICAL	M-2	NORTH WELL MECHANICAL SECTION
MECHANICAL	M-3	SOUTH WELL MECHANICAL SECTION
MECHANICAL	M-4	ODOR CONTROL SECTION
MECHANICAL	M-5	MECHANICAL DETAILS
MECHANICAL	M-6	MECHANICAL DETAILS
STRUCTURAL	S-0.1	STRUCTURAL GENERAL NOTES
STRUCTURAL	S-0.2	STRUCTURAL - GENERAL NOTES
STRUCTURAL	S-1.1	STRUCTURAL - OVERALL FOUNDATION PLAN
STRUCTURAL	S-1.2	STRUCTURAL - ELEVATED STRUCTURE PLAN
STRUCTURAL	S-1.3	STRUCTURAL - ELEVATED STRUCTURE DETAILS
STRUCTURAL	S-1.4	STRUCTURAL - WETWELL DETAILS
STRUCTURAL	S-1.5	STRUCTURAL - STAIR DETAILS
STRUCTURAL	S-1.6	STRUCTURAL - METER VAULT AND SLAB DETAILS
ELECTRICAL	E-1	ELECTRICAL LEGENDS AND ABBREVIATIONS
ELECTRICAL	E-2	ELECTRICAL SITE PLAN
ELECTRICAL	E-3	ELECTRICAL ROOM PLAN
ELECTRICAL	E-4	CANOPY LIGHTING PHOTOMETRIC PLAN
ELECTRICAL	E-5	SITE LIGHTING PHOTOMETRIC PLAN
ELECTRICAL	E-6	ELECTRICAL ONLINE DIAGRAM
ELECTRICAL	E-7	VFD SCHEMATICS
ELECTRICAL	E-8	VFD SCHEMATICS
ELECTRICAL	E-9	PANEL AND LIGHT FIXTURE SCHEDULES
ELECTRICAL	E-10	ELECTRICAL DETAILS
ELECTRICAL	E-11	ELECTRICAL DETAILS
ELECTRICAL	E-12	ELECTRICAL DETAILS
ELECTRICAL	E-13	CONDUIT AND CABLE SCHEDULE
ELECTRICAL	E-14	CONDUIT AND CABLE SCHEDULE

No.	Revisions	Date	By

Kimley»Horn
© 2023 KIMLEY-HORN AND ASSOCIATES, INC.
200 CENTRAL AVENUE, SUITE 600
ST. PETERSBURG, FL 33701
P: 727 547 3999
WWW.KIMLEY-HORN.COM REGISTRY NO. 35106

DESIGN ENGINEER:
SHELBY N. HUGHES, P.E.
FL LICENSE NUMBER
86419
DATE:

SCALE: N.T.S.
DESIGN: SNH
DRAWN: AJO
CHECKED: SAE

GENERAL NOTES

CITY OF ST. PETE BEACH
PUMP STATION 1 REHABILITATION
PINELLAS COUNTY FLORIDA

DATE:
DECEMBER 2023

PROJECT NO.
148404075

SHEET NUMBER
G-2

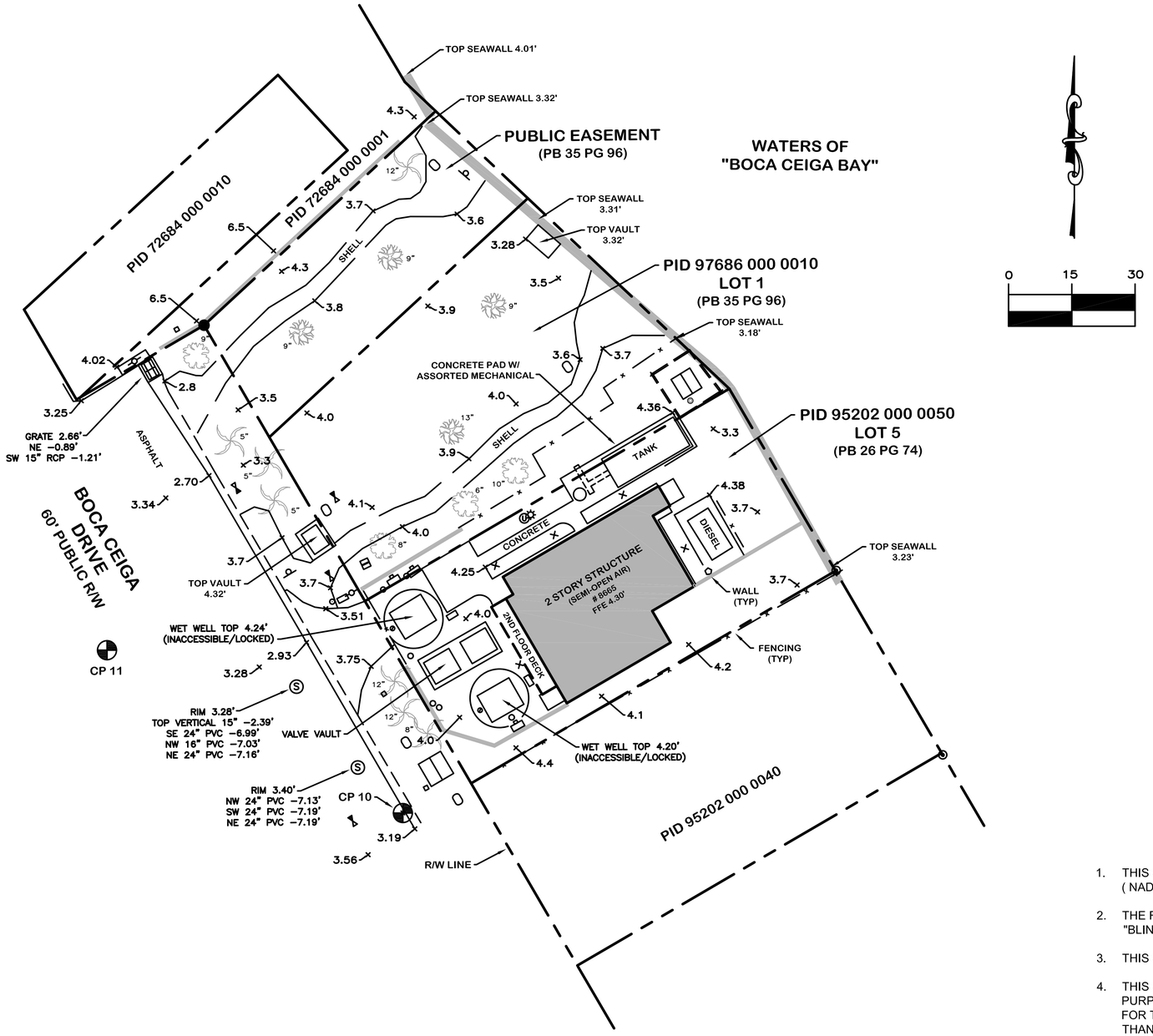

SITE CONTROL

DESIGNATION	NORTHING	EASTING	ELEVATION
CP 10 ND LB 7203	1243087.59	412194.71	3.168'
CP 11 IR LB 7203	1243126.21	412124.56	3.305'

LEGEND

	CONTROL POINT		WATER METER
R/W	RIGHT-OF-WAY		BOLLARD
PID	PARCEL IDENTIFICATION		CLEANOUT
FFE	FINISHED FLOOR ELEVATION		UTILITY ACCESS
PB	PLAT BOOK		UTILITY RISER
PG	PAGE		ELECTRIC METER
	IRON ROD FOUND		LIGHT POLE
	NAIL W/ DISC FOUND		ANTENNA
	GRATE INLET		VERTICAL PIPING
	SIGN		GROUNDING ROD
	SEWER VALVE		UTILITY MANHOLE
	RECLAIM VALVE		OAK
	SANITARY MANHOLE		PALM
	CONTROL PANEL		
	BACKFLOW PREVENTER		
	TRANSFORMER		TREE

GENERAL NOTES

1. THIS SURVEY IS REFERENCED TO A GRID PROJECTION OF THE STATE PLANE COORDINATE SYSTEM OF FLORIDA WEST ZONE (NAD 1983/2011 ADJUSTMENT).
2. THE FOLLOWING NGS VERTICAL CONTROL POINT WAS RECOVERED AND UTILIZED FOR THE ELEVATIONS SHOWN HEREON: "BLIND" NAVD 1988 ELEVATION 3.26'.
3. THIS SURVEY IS SUBJECT TO ADDITIONAL PERTINENT EASEMENTS, RIGHTS-OF-WAY AND RESTRICTIONS OF RECORD, IF ANY.
4. THIS SURVEY DRAWING WAS PREPARED FOR THE EXCLUSIVE USE OF THE PARTY OR PARTIES CERTIFIED TO FOR THE EXPRESS PURPOSE STATED HEREIN AND/OR CONTAINED IN THE CONTRACT BETWEEN HYATT SURVEY SERVICES, INC. AND THE CLIENT FOR THIS PROJECT. COPYING, DISTRIBUTING AND/OR USING THIS DRAWING IN WHOLE OR IN PART FOR ANY PURPOSE OTHER THAN ORIGINALLY INTENDED WITHOUT WRITTEN CONSENT FROM HYATT SURVEY SERVICES, INC. IS STRICTLY PROHIBITED AND RENDERS THE SURVEYOR'S CERTIFICATION, SIGNATURE AND SEAL NULL AND VOID. ANY QUESTIONS CONCERNING THE CONTENT OR PURPOSE OF THIS DRAWING SHOULD BE DIRECTED TO HYATT SURVEY SERVICES, INC.

PROJECT #	21-2683
SURVEY #	PS 1
SEC/TWN/RGE	25-31S-15E
SCALE	1" = 30'
SURVEYED	12/2021
SHEET 1 OF 1	

HYATT SURVEY SERVICES, INC.
LB No.: 7203 Geographic Data Specialists
2012 Lena Road Bradenton, Florida 34211
Phone: (941) 748-4693

TOPOGRAPHIC SURVEY
PUMP STATION 1 REHABILITATION
ST. PETE BEACH
BOCA CEIGA DRIVE & 87TH AVENUE
PINELLAS COUNTY, FLORIDA

THIS SURVEY IS NOT VALID WITHOUT THE ORIGINAL SIGNATURE AND RAISED SEAL OR DIGITAL SIGNATURE OF A FLORIDA LICENSED SURVEYOR AND MAPPER.

RUSSELL P. HYATT, PSM
FLORIDA SURVEYORS REGISTRATION NO. 5303

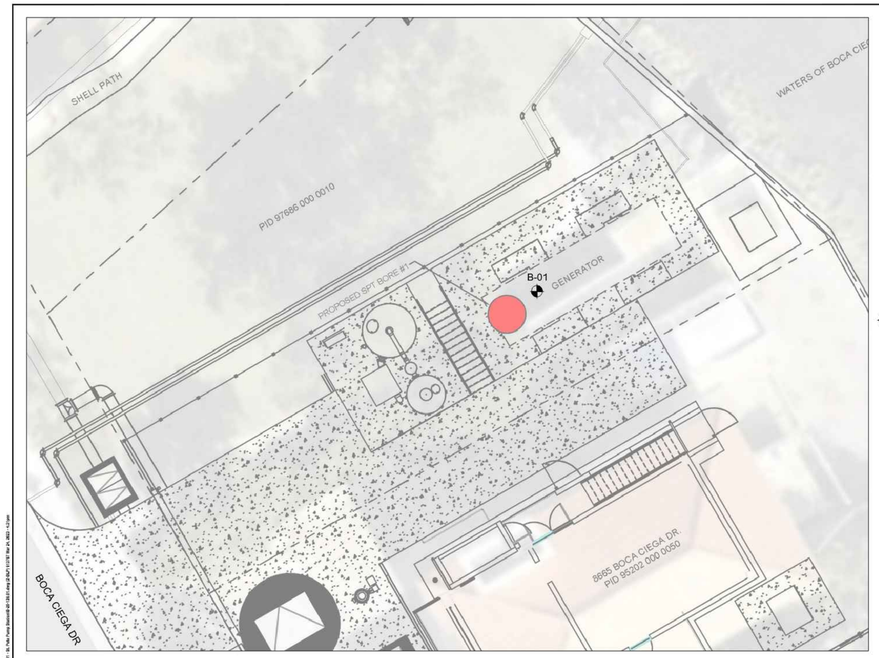

LEGEND

APPROXIMATE LOCATION OF SPT BORING

REVISIONS			
NO.	DATE	DESCRIPTIONS	APPROVED

PREPARED BY:
AREHNA | Engineering, Inc.
5012 West Laurilan Street, Tampa, FL 33609
Phone 813.944.3668 | Fax 813.944.4959
Certificate of Authorization No. 28122

BORING LOCATION PLAN

	NAME	DATE
DESIGNED BY:	SS	3/2023
DRAWN BY:	DG	3/2023
CHECKED BY:	AT	3/2023
SUPERVISED BY:	Andy Tao, P.E.	

PROJECT NAME	PROJECT NO.	SHEET NO.
ST. PETE PUMP STATION 1 ST. PETERSBURG, FLORIDA	B-20-138.01	2

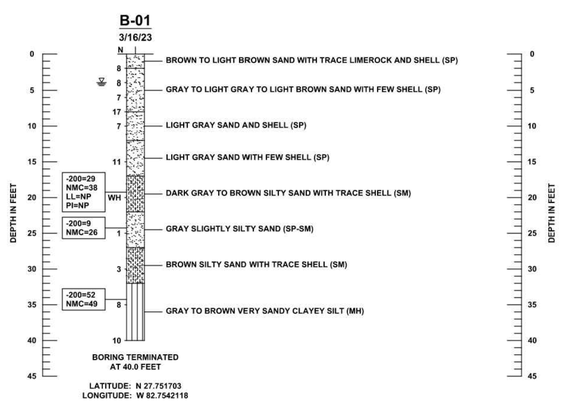

LEGEND

FINE SAND (SP/SP-SM)

SILT (MH)

SILTY SAND (SM)

SP UNIFIED SOIL CLASSIFICATION SYSTEM (ASTM D 2488) GROUP SYMBOL AS DETERMINED BY VISUAL REVIEW AND/OR LABORATORY TESTING

GROUNDWATER TABLE AT THE TIME OF DRILLING

N SPT N-VALUE IN BLOWS/FOOT FOR 12 INCHES OF PENETRATION

WH FELL UNDER WEIGHT OF ROD AND HAMMER

-200 FINES PASSING THE #200 STANDARD SIEVE (%)

NMC NATURAL MOISTURE CONTENT (%)

LL LIQUID LIMIT (%)

PI PLASTICITY INDEX (%)

NP NON PLASTIC

	SAFETY HAMMER	AUTOMATIC HAMMER
GRANULAR MATERIALS-RELATIVE DENSITY	SPT (BLOWS/FT)	SPT (BLOWS/FT)
VERY LOOSE LOOSE MEDIUM DENSE VERY DENSE	LESS THAN 4 4 to 10 10 to 30 30 to 50 GREATER THAN 50	LESS THAN 3 3 to 8 8 to 24 24 to 40 GREATER THAN 40
SILTS AND CLAYS CONSISTENCY	SPT (BLOWS/FT)	SPT (BLOWS/FT)
VERY SOFT SOFT FIRM STIFF VERY STIFF HARD	LESS THAN 2 2 to 4 4 to 8 8 to 15 15 to 30 GREATER THAN 30	LESS THAN 1 1 to 3 3 to 6 6 to 12 12 to 24 GREATER THAN 24

Soil Profile Notes:

1. The profiles depicted are of a generalized nature to highlight the major subsurface stratification features and material characteristics. The soil profiles include soil description, stratifications and penetration resistances. The stratifications shown on the boring profiles represent the conditions only at the actual boring location. Variations may occur and should be expected between boring locations. The stratifications represent the approximate boundary between subsurface materials and the actual transition may be gradual.
2. Groundwater levels generally fluctuate during periods of prolonged drought and extended rainfall and may be affected by man-made influences. In addition, a seasonal effect will also occur in which higher groundwater levels or temporary perched conditions are normally recorded in rainy seasons.
3. The boring locations presented are approximate and based on hand held GPS with an accuracy of +/- 10 feet.
4. SPT borings were performed using an automatic hammer.

REVISIONS			
NO.	DATE	DESCRIPTIONS	APPROVED

PREPARED BY:
AREHNA | Engineering, Inc.
5012 West Laurilan Street, Tampa, FL 33609
Phone 813.944.3668 | Fax 813.944.4959
Certificate of Authorization No. 28122

SOIL BORING PROFILES

	NAME	DATE
DESIGNED BY:	SS	3/2023
DRAWN BY:	DG	3/2023
CHECKED BY:	AT	3/2023
SUPERVISED BY:	Andy Tao, P.E.	

PROJECT NAME	PROJECT NO.	SHEET NO.
ST. PETE PUMP STATION 1 ST. PETERSBURG, FLORIDA	B-20-138.01	3

No.	Revisions	Date	By

Kimley»Horn

© 2023 KIMLEY-HORN AND ASSOCIATES, INC.
200 CENTRAL AVE, SUITE 600
ST. PETERSBURG, FL 33701
P: 727 547 3999
WWW.KIMLEY-HORN.COM REGISTRY NO. 35106

DESIGN ENGINEER:

DATE:

SCALE: AS NOTED

DESIGN:

DRAWN:

CHECKED:

SOIL BORING LOG

CITY OF ST. PETE BEACH
PUMP STATION 1
REHABILITATION

PINELLAS COUNY FLORIDA

DATE:
DECEMBER 2023

PROJECT NO.
148404075

SHEET NUMBER
C-0.1

STORM WATER POLLUTION PREVENTION PLAN

SITE DESCRIPTION:

PROJECT NAME AND LOCATION:

PUMP STATION 1 REHABILITATION
8665 BOCA CIEGA DRIVE
ST. PETE BEACH, FLORIDA 33706
*SEE COVER SHEET FOR LOCATION MAP

CLIENT NAME AND ADDRESS:

CITY OF ST. PETE BEACH
155 COREY AVENUE
ST. PETE BEACH, FLORIDA 33706

PROJECT DESCRIPTION:

THE PROJECT WILL CONSIST OF SITE CONSTRUCTION AND ASSOCIATED PAVING, GRADING, AND STRIPING.

CONTRIBUTING DRAINAGE AREA: 0.14 ACRES

ULTIMATE RECEIVING WATERS: BOCA CIEGA BAY, THEN GULF OF MEXICO
ST. PETE BEACH - PINELLAS COUNTY, FL

ACTIVITIES THAT REQUIRE EROSION CONTROL:

SITE CLEARING AND GRUBBING; PROVIDING A STABILIZED CONSTRUCTION ENTRANCE, PERIMETER, AND OTHER EROSION AND SEDIMENT CONTROLS; SITE GRADING; INSTALLATION OF STORM WATER, SANITARY SEWER, AND WATER INFRASTRUCTURE; CURB AND GUTTER, ROADWAYS, AND SIDEWALKS; LANDSCAPING.

*SEE PLANS FOR THE LOCATION OF TEMPORARY SEDIMENT BARRIERS AND OTHER EROSION CONTROL METHODS.

SEQUENCE OF MAJOR ACTIVITIES:

THE ORDER OF CONSTRUCTION IS AS FOLLOWS:

1. CONTRACTOR SHALL PREPARE AND FILE SWPPP AND NPDES NOI.
2. PROVIDE STABILIZED CONSTRUCTION ENTRANCE
3. INSTALL SILT FENCES AND OTHER PERIMETER CONTROLS
4. CLEAR AND GRUB FOR SEDIMENT BASIN AND EARTH DIKE
5. CONSTRUCT EARTH DIKE AND SEDIMENT BASIN
6. FINISH CLEARING AND GRUBBING
7. REMOVE AND STORE TOPSOIL
8. PROVIDE INITIAL GRADING AS REQUIRED
9. STABILIZE ALL DISTURBED AREAS AS SOON AS POSSIBLE AND ALWAYS WITHIN 7 DAYS OF INACTIVITY.
10. INSTALL UTILITIES, STORM SEWER, CURB AND GUTTER
11. INSTALL BASE TO ROAD AND PARKING AREA
12. FINISH GRADING ENTIRE SITE
13. PROVIDE REQUIRED LANDSCAPING
14. CONSTRUCT FINAL PAVING
15. REMOVE ACCUMULATED SEDIMENT
16. REMOVE ANY ITEMS THAT ARE NOT REQUIRED
17. COMPLETE FINAL STABILIZATION AND FILE NOT.

THE SEQUENCE OF CONSTRUCTION SHOWN ABOVE IS A GENERAL OVERVIEW AND IS INTENDED TO CONVEY THE GENERAL CONCEPTS OF THE EROSION CONTROL DESIGN AND SHOULD NOT BE RELIED UPON FOR CONSTRUCTION PURPOSES.
THE CONTRACTOR IS SOLELY RESPONSIBLE FOR DETAILED PHASING AND CONSTRUCTION SEQUENCING NECESSARY TO CONSTRUCT THE PROPOSED IMPROVEMENTS INCLUDED IN THESE PLANS. THE CONTRACTOR SHALL NOTIFY ENGINEER IN WRITING IMMEDIATELY, PRIOR TO AND/OR DURING CONSTRUCTION IF ANY ADDITIONAL INFORMATION ON THE CONSTRUCTION SEQUENCE IS NECESSARY. CONTRACTOR IS SOLELY RESPONSIBLE FOR COMPLYING WITH THE REQUIREMENTS OF THE AUTHORITY HAVING JURISDICTION AND ALL OTHER APPLICABLE LAWS.

TIMING OF CONTROL MEASURES:

THE INSTALLATION OF SILT FENCE (AND OTHER EROSION CONTROL MEASURES), A STABILIZED ENTRANCE AND SEDIMENT BASIN SHALL OCCUR PRIOR TO CLEARING AND GRUBBING ACTIVITY. AFTER CONSTRUCTION IS COMPLETE, THE ACCUMULATED SEDIMENT SHALL BE REMOVED AND THE AREAS SHALL BE REGRADED AND PERMANENTLY STABILIZED AS SHOWN ON THE PLANS.

EROSION AND SEDIMENT CONTROLS:

BEST MANAGEMENT PRACTICES SHALL BE USED FOR THIS PROJECT TO CONTROL EROSION AND TURBIDITY CAUSED BY STORM WATER RUN-OFF. THE LOCATION AND DETAILS OF EROSION CONTROL METHODS ARE SHOWN ON THE PLANS. THE SUB-CONTRACTOR(S) IS/ARE RESPONSIBLE FOR PLACING AND MAINTAINING THESE CONTROL METHODS AS SHOWN ON THE PLANS OR AS REQUIRED. HE/SHE SHALL ALSO PROVIDE THE REQUIRED EROSION PROTECTION AS REQUIRED BY LOCAL, STATE AND FEDERAL LAW. OFFSITE SHALL BE COVERED WITH A TARPAULIN.

STORM WATER MANAGEMENT:

STORM WATER COLLECTION SHALL BE PROVIDED BY DRAINAGE INLETS FOR THE DEVELOPED AREAS. THE AREAS THAT ARE REGRADED BUT NOT DEVELOPED SHALL BE STABILIZED IMMEDIATELY AFTER REGRADING. THE ENTIRE SITE SHALL DRAIN TO A SWMF. THE SWMF SHALL BE IN THE AREA OF THE TEMPORARY SEDIMENT BASINS. WHEN SLOPES HAVE BEEN STABILIZED, THE SEDIMENT THAT HAS ACCUMULATED SHALL BE REMOVED FROM THE BASIN AND THE APPROPRIATE VEGETATION SHALL BE PLANTED.

STABILIZATION PRACTICES:

FOR STABILIZATION PRACTICES CONTRACTOR SHOULD REFER TO APPENDIX C OF PINELLAS COUNTY EROSION AND SEDIMENTATION CONTROL STANDARDS.

THE CONTRACTOR SHALL PROVIDE GROUND COVER (SOD) ESTABLISHMENT OF THE SPECIFIED PERMANENT VEGETATION BEFORE FINAL ACCEPTANCE OF THE PROJECT WITH NO DEAD AREAS OF GROUND COVER. GROUNDCOVER (SOD) ESTABLISHMENT SHALL CONSIST OF NECESSARY PRESERVING AND PROTECTING TO KEEP THE GRASSED AREAS IN A SATISFACTORY CONDITION. THE CONTRACTOR SHALL ROLL THE SOD WITHIN 24 HOURS OF THE INSTALLATION. THE CONTRACTOR SHALL WATER THE SODDED AREAS AS LONG AND AS OFTEN AS NECESSARY TO PROMOTE MAXIMUM PRACTICABLE GROWTH.

STRUCTURAL PRACTICES:

EARTH DIKE - IF REQUIRED, AN EARTH DIKE SHALL BE CONSTRUCTED ALONG THE SITE PERIMETER. A PORTION OF THE DIKE SHALL DIVERT RUN-ON AROUND THE CONSTRUCTION SITE. THE REMAINING PORTION OF THE DIKE SHALL COLLECT RUNOFF FROM THE DISTURBED AREA AND DIRECT THE RUNOFF TO THE SEDIMENT BASIN.

SEDIMENT BASIN - A SEDIMENT BASIN SHALL BE CONSTRUCTED IN THE COMMON DRAINAGE AREA FOR THE SITE. THIS STORAGE POND SHALL HAVE A VOLUME OF 3,600 CUBIC FEET OF STORAGE FOR EACH ACRE. ALL SEDIMENT COLLECTED IN THE BASIN MUST BE REMOVED FROM THE BASIN UPON COMPLETION OF CONSTRUCTION. SEDIMENT FROM THE BASIN MAY BE USED AS FILL ON THE SITE IF IT IS SUITABLE SOIL.

WASTE DISPOSAL:

WASTE MATERIALS - ALL WASTE MATERIALS SHALL BE COLLECTED AND STORED IN A METAL DUMPSTER WITH A SECURE LID IN ACCORDANCE WITH ALL LOCAL AND STATE LAWS. ALL TRASH AND CONSTRUCTION DEBRIS FROM THE SITE SHALL BE DEPOSITED IN THE DUMPSTER. THE SUPERINTENDENT SHALL COORDINATE WITH THE LOCAL UTILITIES TO HAVE THE DUMPSTER EMPTIED AT LEAST TWICE A WEEK AND THE WASTE TAKEN TO AN APPROPRIATE LANDFILL. NO CONSTRUCTION WASTE MATERIALS SHALL BE BURIED ON SITE. THE SUPERINTENDENT SHALL ORGANIZE TRAINING FOR THE EMPLOYEES IN THE PROPER PRACTICES WHEN DEALING WITH WASTE MATERIALS. THE SUPERINTENDENT SHALL BE RESPONSIBLE FOR POSTING AND ENFORCING WASTE MATERIAL PROCEDURES.

HAZARDOUS WASTE - HAZARDOUS WASTE MATERIALS SHALL BE DISPOSED OF IN ACCORDANCE WITH ALL LOCAL AND STATE LAWS OR AS DIRECTED BY THE MANUFACTURER. THE SUPERINTENDENT SHALL ORGANIZE THE PROPER TRAINING FOR EMPLOYEES IN THE PROPER PRACTICES WHEN DEALING WITH HAZARDOUS WASTE MATERIALS. THESE PROCEDURES SHALL BE POSTED ON THE SITE. THE PERSON WHO MANAGES THE SITE SHALL BE RESPONSIBLE FOR ENFORCING THE PROCEDURES.

SANITARY WASTE - SANITARY WASTE SHALL BE COLLECTED AND DISPOSED OF IN ACCORDANCE WITH ALL LOCAL AND STATE LAWS. THE SUPERINTENDENT SHALL COORDINATE WITH THE LOCAL UTILITY FOR COLLECTION OF THE SANITARY WASTE AT LEAST THREE TIMES A WEEK TO PREVENT SPILLAGE ONTO

OFFSITE TRACKING:

THE SITE:
A STABILIZED CONSTRUCTION ENTRANCE SHALL BE PROVIDED TO REDUCE SEDIMENT TRACKING OFFSITE. THE MAJOR ROAD CONNECTED TO THE PROJECT SHALL BE CLEANED ONCE A DAY TO REMOVE ANY EXCESS MUD, DIRT OR ROCK RESULTING FROM CONSTRUCTION TRAFFIC. ALL TRUCKS HAULING MATERIALS OFFSITE SHALL BE COVERED WITH A TARPAULIN.

ITEMS REQUIRING POLLUTION PREVENTION:

THE FOLLOWING ITEMS ARE EXPECTED TO BE PRESENT ON THE PROJECT SITE: ASPHALT, CONCRETE, CLEANING SUPPLIES, DETERGENTS, FERTILIZERS, MASONARY BLOCKS/BRICKS, METAL PIECES, PAINT, PETROLEUM BASED PRODUCTS, ROOFING SUPPLIES, TAR, WOOD.

THE FOLLOWING ARE NON-STORM WATER SOURCES THAT WILL BE ENCOUNTERED AT THE SITE AND SHOULD BE DIRECTED TO THE SEDIMENT BASIN PRIOR TO DISCHARGE:
-UNCONTAMINATED GROUNDWATER EXPOSED DURING EXCAVATION
-WATER FROM WATER LINE FLUSHING
-PAVEMENT WASH WATERS (WHERE NO SPILLS OR LEAKS OF TOXIC OR HAZARDOUS MATERIALS HAVE OCCURRED).

SPILL PREVENTION AND CONTROL:

THE FOLLOWING ARE THE MATERIAL MANAGEMENT PRACTICES THAT WILL BE USED TO REDUCE THE RISK OF SPILLS OR OTHER ACCIDENTAL EXPOSURE OF MATERIALS AND SUBSTANCES TO STORM WATER RUNOFF.

GOOD HOUSEKEEPING:

-SUPERINTENDENT SHALL INSPECT PROJECT AREA DAILY FOR PROPER STORAGE, USE, AND DISPOSAL OF CONSTRUCTION MATERIALS.
-STORE ONLY ENOUGH MATERIAL ON SITE FOR PROJECT COMPLETION.
-ALL SUBSTANCES SHOULD BE USED BEFORE DISPOSAL OF CONTAINER.
-ALL CONSTRUCTION MATERIALS STORED SHALL BE ORGANIZED AND IN THE PROPER CONTAINER AND IF POSSIBLE, STORED UNDER A ROOF OR PROTECTIVE COVER.
-PRODUCTS SHALL NOT BE MIXED UNLESS DIRECTED BY THE MANUFACTURER.
-ALL PRODUCTS SHALL BE USED AND DISPOSED OF ACCORDING TO THE MANUFACTURER'S RECOMMENDATIONS.

HAZARDOUS PRODUCTS:

-MATERIALS SHOULD BE KEPT IN ORIGINAL CONTAINER WITH LABELS UNLESS THE ORIGINAL CONTAINERS CANNOT BE RESEALED. IF ORIGINAL CONTAINERS CANNOT BE USED, LABELS AND PRODUCT INFORMATION SHALL BE SAVED.
-PROPER DISPOSAL PRACTICES SHALL ALWAYS BE FOLLOWED IN ACCORDANCE WITH MANUFACTURER AND LOCAL/STATE REGULATIONS.

PRODUCT SPECIFIC PRACTICES:

-PETROLEUM PRODUCTS MUST BE STORED IN PROPER CONTAINERS AND CLEARLY LABELED. VEHICLES CONTAINING PETROLEUM PRODUCTS SHALL BE PERIODICALLY INSPECTED FOR LEAKS. PRECAUTIONS SHALL BE TAKEN TO AVOID LEAKAGE OF PETROLEUM PRODUCTS ON SITE.
-THE MINIMUM AMOUNT OF FERTILIZER SHALL BE USED AND MIXED INTO THE SOIL IN ORDER TO LIMIT EXPOSURE TO STORM WATER. FERTILIZERS SHALL BE STORED IN A COVERED SHED. THE CONTENTS OF ANY PARTIALLY USED BAGS OF FERTILIZER SHALL BE TRANSFERRED TO A SEALABLE PLASTIC BIN TO AVOID SPILLS.
-PAINT CONTAINERS SHALL BE SEALED AND STORED WHEN NOT IN USE. EXCESS PAINT MUST BE DISPOSED OF IN AN APPROVED MANNER.
-CONCRETE TRUCKS SHALL NOT BE ALLOWED TO WASH OUT OR DISCHARGE SURPLUS CONCRETE OR DRUM WASH WATER ON THE SITE.

SPILL CONTROL PRACTICES:

IN ADDITION TO THE GOOD HOUSEKEEPING AND MATERIAL MANAGEMENT PRACTICES DISCUSSED IN THE PREVIOUS SECTIONS OF THIS PLAN, THE FOLLOWING PRACTICES SHALL BE FOLLOWED FOR SPILL PREVENTION AND CLEANUP:
-SPILL CLEANUP INFORMATION SHALL BE POSTED ON SITE TO INFORM EMPLOYEES ABOUT CLEANUP PROCEDURES AND RESOURCES.
-THE FOLLOWING CLEAN-UP EQUIPMENT MUST BE KEPT ON-SITE NEAR THE MATERIAL STORAGE AREA: GLOVES, MOPS, RAGS, BROOMS, DUST PANS, SAND, SAWDUST, LIQUID ABSORBER, GOGGLES, AND TRASH CONTAINERS.
-ALL SPILLS SHALL BE CLEANED UP AS SOON AS POSSIBLE.
-WHEN CLEANING A SPILL, THE AREA SHOULD BE WELL VENTILATED AND THE EMPLOYEE SHALL WEAR PROPER PROTECTIVE COVERING TO PREVENT INJURY.
-TOXIC SPILLS MUST BE REPORTED TO THE PROPER AUTHORITY REGARDLESS OF THE SIZE OF THE SPILL.
-AFTER A SPILL, THE PREVENTION PLAN SHALL BE REVIEWED AND CHANGED TO PREVENT FURTHER SIMILAR SPILLS FROM OCCURRING. THE CAUSE OF THE SPILL, MEASURES TO PREVENT IT, AND HOW TO CLEAN THE SPILL UP SHALL BE RECORDED.
-THE SUPERINTENDENT SHALL BE THE SPILL PREVENTION AND CLEANUP COORDINATOR AND IS RESPONSIBLE FOR THE DAY TO DAY SITE OPERATIONS. THE SUPERINTENDENT ALSO OVERSEES THE SPILL PREVENTION PLAN AND SHALL BE RESPONSIBLE FOR EDUCATING THE EMPLOYEES ABOUT SPILL PREVENTION AND CLEANUP PROCEDURES.

MAINTENANCE AND INSPECTION PRACTICES

THE FOLLOWING ARE MAINTENANCE AND INSPECTION PRACTICES THAT SHALL BE COMPLETED BY THE CONTRACTOR:

-ALL SEDIMENT AND EROSION CONTROL METHODS SHALL BE CHECKED DAILY AND AFTER EACH SIGNIFICANT RAINFALL BY THE SUPERINTENDENT OR SOMEONE UNDER HIS/HER DIRECT SUPERVISION.
-ALL SEDIMENT AND EROSION CONTROL METHODS SHALL BE KEPT IN GOOD CONDITION. REPAIRS MUST BE MADE WITHIN 24 HOURS OF REPORT.
-THE SILT FENCE SHALL BE CLEARED OF SEDIMENT WHEN SEDIMENT MEASURES ONE-THIRD THE HEIGHT OF THE FENCE.
-THE SILT FENCE SHALL BE INSPECTED PERIODICALLY FOR HEIGHT OF SEDIMENT AND CONDITION OF FENCE.
-THE SEDIMENT BASINS/DITCHES SHALL BE CHECKED MONTHLY FOR DEPTH OF SEDIMENT. THEY SHALL BE CLEANED WHEN SEDIMENT REACHES 10% OF TOTAL CAPACITY AND AFTER CONSTRUCTION IS COMPLETE.
-THE DIVERSION DIKE SHALL BE INSPECTED MONTHLY. ANY BREACHES SHALL BE PROMPTLY REPAIRED.
-ALL SEEDING SHALL BE CHECKED FOR PROPER GROWTH AND UNIFORMITY. UNSTABALIZED AREAS SHALL BE RE-SODDED.
-A MAINTENANCE REPORT SHALL BE COMPLETED DAILY AFTER EACH INSPECTION OF THE SEDIMENT AND EROSION CONTROL METHODS. THE REPORTS SHALL BE FILED IN AN ORGANIZED MANNER AND RETAINED ON-SITE DURING CONSTRUCTION. AFTER CONSTRUCTION IS COMPLETED, THE REPORTS SHALL BE SAVED FOR AT LEAST THREE YEARS. THE REPORTS SHALL BE AVAILABLE FOR ANY AGENCY THAT HAS JURISDICTION OVER EROSION CONTROL.
-THE SUPERINTENDENT SHALL ORGANIZE THE TRAINING FOR INSPECTION PROCEDURES AND PROPER EROSION CONTROL METHODS FOR EMPLOYEES THAT COMPLETE INSPECTIONS AND REPORTS.

THE PRESENCE OF GROUNDWATER SHOULD BE ANTICIPATED ON THIS PROJECT. CONTRACTOR'S BID SHALL INCLUDE CONSIDERATION FOR ADDRESSING THIS ISSUE.

Always call 811 two full business days before you dig to have underground utilities located and marked.

Sunshine811.com

CONTRACTOR'S CERTIFICATION

I CERTIFY UNDER PENALTY OF LAW THAT I UNDERSTAND THE TERMS AND CONDITIONS OF THE GENERAL NATIONAL POLLUTANT DISCHARGE ELIMINATION SYSTEM (NPDES) PERMIT THAT AUTHORIZES THE STORM WATER DISCHARGE ASSOCIATED WITH INDUSTRIAL ACTIVITY FROM THE CONSTRUCTION SITE IDENTIFIED AS PART OF THIS CERTIFICATION.

SIGNATURE/DATE	COMPANY NAME/ADDRESS	RESPONSIBILITY

No.	Revisions	Date	By

Kimley»Horn
© 2023 KIMLEY-HORN AND ASSOCIATES, INC.
200 CENTRAL AVE., SUITE 600
ST. PETERSBURG, FL 33701
P: 727 547 3999
WWW.KIMLEY-HORN.COM REGISTRY NO. 35106

DESIGN ENGINEER:
SHELBY N. HUGHES, P.E.
FL LICENSE NUMBER 86419
DATE:

SCALE: AS NOTED
DESIGN: SNH
DRAWN: AJO
CHECKED: SAE

SWPPP NOTES

CITY OF ST. PETE BEACH
PUMP STATION 1
REHABILITATION
PINELLAS COUNY FLORIDA

DATE: DECEMBER 2023
PROJECT NO. 148404075
SHEET NUMBER C-1

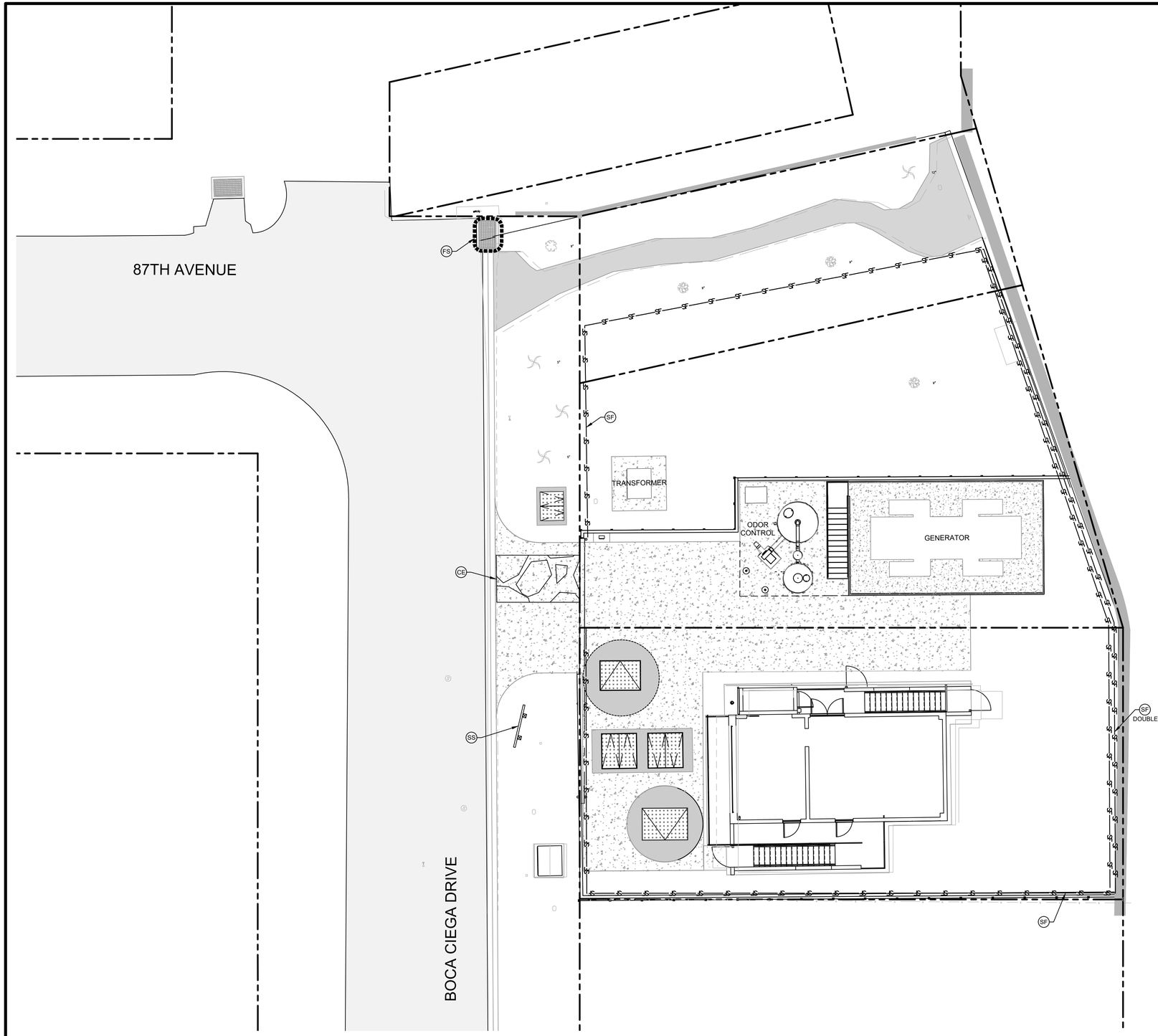

GRAPHIC SCALE IN FEET
0 5 10 20

LEGEND

- PROPERTY BOUNDARY
- UTILITY TO BE REMOVED
- TEMPORARY CHAIN LINK FENCE
- TREE TO BE REMOVED
- CONCRETE CURB / SIDEWALK TO BE REMOVED
- ASPHALT TO BE REMOVED

SWPP LEGEND

- SS SWPPP INFORMATION SIGN
- FS INLET PROTECTION FILTER SACK
- SF SEDIMENTATION/SILT FENCE WITH WIRE BACKING
- CE TEMPORARY GRAVEL CONSTRUCTION ENTRANCE

NATURAL RESOURCES:

1. PROTECTIVE BARRICADES SHALL REMAIN IN PLACE UNTIL LAND ALTERATION & CONSTRUCTION ARE COMPLETE.
2. NO REMOVAL OF VEGETATION BY GRUBBING, OR TO PLACE SOIL DEPOSITS, DEBRIS, SOLVENTS, CONSTRUCTION MATERIAL, MACHINERY OR OTHER EQUIPMENT OF ANY KIND WITHIN THE DRIPLINE OF A TREE TO REMAIN ON SITE, UNLESS OTHERWISE APPROVED BY THE CITY.
3. ROOT PRUNING AND LIMB TRIMMING SHALL BE IN ACCORDANCE WITH ANSI A300 PRUNING STANDARDS. ALL TRIMMING SHALL BE DONE BY A QUALIFIED, LICENSED SERVICE. ROOTS SHALL BE CLEANLY SEVERED AT SHOWN LOCATION OF PLAN. LIMBS SHALL BE CLEANLY SEVERED BACK TO KNUCKLE. ALL MACHINERY USED SHALL BE DESIGNED SPECIFICALLY FOR THE TASK INVOLVED.
4. A THREE (3) INCH LAYER OF MULCH SHALL BE APPLIED OVER THE SURFACE OF EXPOSED ROOTS DURING THE SITE CLEARING PHASE
5. NO UNDERGROUND UTILITIES SHALL BE PLACED WITHIN THE PROTECTIVE RADIUS OF ANY PROTECTED OR GRAND TREE.
6. POWER LINE SPECIES (TREE) SHALL BE PLANTED WITHIN THE AREA OF OVER HEAD POWER LINES.
7. SITE DEMOLITION ACTIVITIES CONDUCTED WITHIN THE PROTECTIVE RADIUS OF A PROTECTED TREE REMAINING ON SITE WILL BE PERFORMED BY HAND UNDER THE SUPERVISION OF AN ARBORIST.
8. ALL GRAND TREES TO REMAIN SHALL BE PROTECTED WITH A 6' CHAIN LINK FENCE TREE BARRICADE. OTHER TREES TO REMAIN MAY BE PROTECTED WITH WOODED BARRICADES.

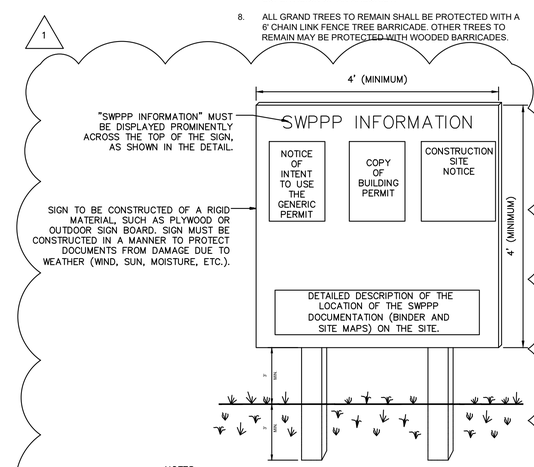

NOTES:

1) THE SWPPP INFORMATION SIGN MUST BE LOCATED NEAR THE CONSTRUCTION EXIT OF THE SITE, SUCH THAT IT IS ACCESSIBLE AND VIEWABLE BY THE GENERAL PUBLIC, BUT NOT OBSTRUCTING VIEWS AS TO CAUSE A SAFETY HAZARD.
2) ALL POSTED DOCUMENTS MUST BE MAINTAINED IN A CLEARLY READABLE CONDITION AT ALL TIMES THROUGHOUT CONSTRUCTION AND UNTIL THE NOTICE-OF-TERMINATION (NOT) IS FILED FOR THE PERMIT.
3) CONTRACTOR SHALL POST OTHER STORM WATER AND/OR EROSION AND SEDIMENT CONTROL RELATED PERMITS ON THE SIGN AS REQUIRED BY THE GOVERNING AGENCY.
4) SIGN SHALL BE LOCATED OUTSIDE OF PUBLIC RIGHT-OF-WAY AND EASEMENTS UNLESS APPROVED BY THE GOVERNING AGENCY.
5) CONTRACTOR IS RESPONSIBLE FOR ENSURING STABILITY OF THE SWPPP INFORMATION SIGN.

SWPPP INFORMATION SIGN

No.	Revisions	Date	By
1	IFC REVISION NO.1	08/20/24	SNH

Kimley»Horn

© 2024 KIMLEY-HORN AND ASSOCIATES, INC.
200 CENTRAL AVE., SUITE 600
ST. PETERSBURG, FL 33701
P: 727 547 3999
WWW.KIMLEY-HORN.COM REGISTRY NO. 35106

DESIGN ENGINEER:
SHELBY N. HUGHES, P.E.
FL LICENSE NUMBER 86419
DATE:

SCALE: AS NOTED
DESIGN: SNH
DRAWN: AJO
CHECKED: SAE

SWPP PLAN

CITY OF ST. PETE BEACH
PUMP STATION 1 REHABILITATION
PINELLAS COUNY FLORIDA

DATE: AUGUST 2024
PROJECT NO. 148404075
SHEET NUMBER C-2

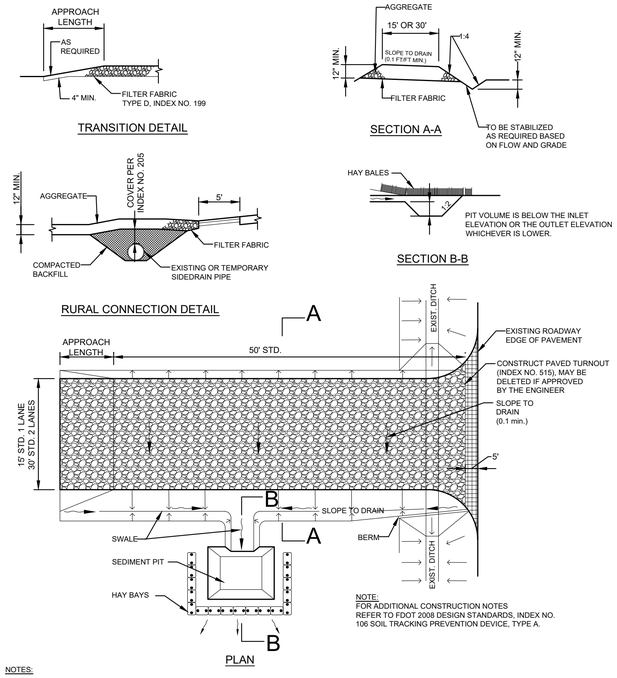

NOTES:

THE ENTRANCE SHALL BE MAINTAINED IN A CONDITION THAT WILL PREVENT TRACKING OR FLOWING OF SEDIMENT ONTO PUBLIC RIGHTS- OF-WAY. THIS MAY REQUIRE TOP DRESSING, REPAIR AND/OR CLEANOUT OF ANY MEASURES USED TO TRAP SEDIMENT.

2. WHEN NECESSARY, WHEELS SHALL BE CLEANED PRIOR TO ENTRANCE ONTO PUBLIC RIGHT-OF-WAY
3. WHEN WASHING IS REQUIRED, IT SHALL BE DONE ON AN AREA STABILIZED WITH CRUSHED STONE THAT DRAINS INTO AN APPROVED SEDIMENT TRAP OR SEDIMENT BASIN.

TEMPORARY GRAVEL CONSTRUCTION ENTRANCE

N.T.S.

FIGURE 1

Silt Fence Design Criteria

Slope Steepness	(Maximum) Slope Length	(Maximum) Silt Fence Length
Flatter than 50:1	unlimited	unlimited
50:1 to 10:1	125 feet	1,000 feet
10:1 to 5:1	100 feet	750 feet
5:1 to 3:1	60 feet	500 feet
3:1 to 2:1	40 feet	250 feet
2:1 and steeper	20 feet	125 feet

Note: In areas of less than 2% slope and sandy soils (USDA general classification system, soil Class A) maximum slope length and silt fence length will be unlimited. In these areas a silt fence may be the only perimeter control required.

Construction Specifications

1. Fence posts shall be a minimum of 36" long driven 16" minimum into the ground. Wood posts shall be 11/2" x 11/2" square (minimum) cut, or 13/4" diameter (minimum) round and shall be of sound quality hardwood. Steel posts will be standard T or U section weighting not less than 1.00 pond per linear foot.

2. Geotextile shall be fastened securely to each fence post with wire ties or staples at top and mid-section and shall meet the following requirements for Geotextile Class F:

Tensile Strength	50 lbs/in (min.)
Tensile Modulus	20 lbs/in (min.)
Flow Rate²	0.3 gal ft / minute (max.)
Filtering Efficiency	75% (min.)

3. Where ends of geotextile fabric come together, they shall be overlapped, folded and stapled to prevent sediment bypass.

4. Silt Fence shall be inspected after each rainfall event and maintained when bulges occur or when sediment accumulation reached 50% of the fabric height.

TEMPORARY SEDIMENT FENCE (SF)

N.T.S.

FIGURE 2

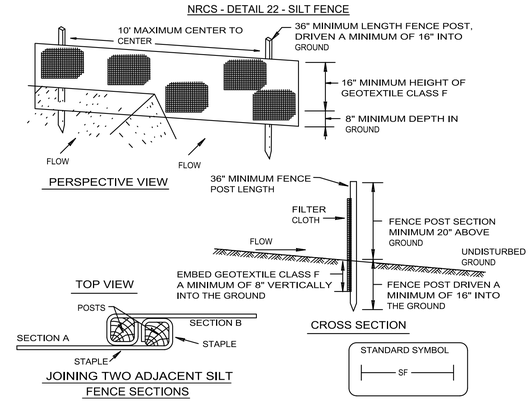

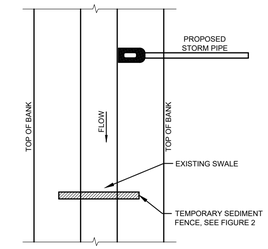

SILT BARRIER AT CONNECTION OF STORM PIPE TO EXISTING SWALE

N.T.S.

FIGURE 10

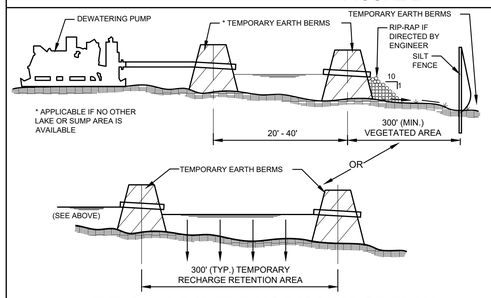

TYPICAL DEWATERING DISCHARGE PLAN

N.T.S.

FIGURE 17

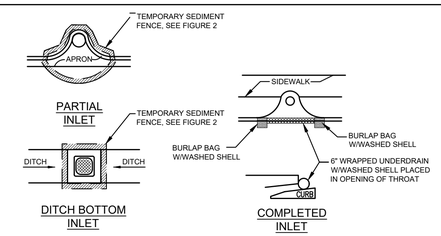

PROTECTION AROUND INLETS OR SIMILAR STRUCTURES

N.T.S.

FIGURE 7

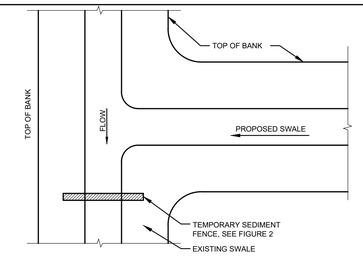

SILT BARRIER AT CONNECTION OF SWALE TO EXISTING SWALE

N.T.S.

FIGURE 11

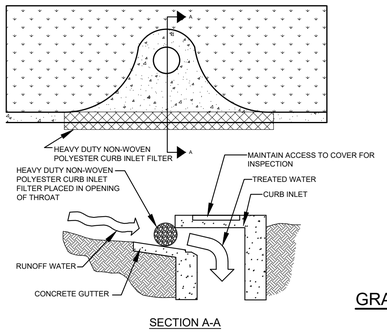

SOCK DRAIN INLET PROTECTION

N.T.S.

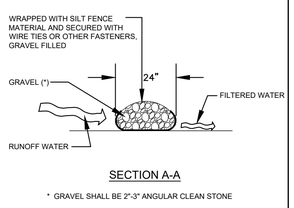

GRAVEL DIKE (WRAPPED IN FABRIC)

N.T.S.

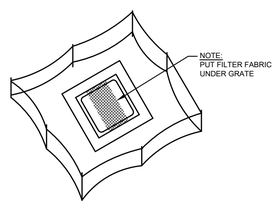

STAKED SILT BARRIER OR SILT FENCE PROTECTION AROUND DITCH BOTTOM INLETS

N.T.S.

FIGURE 8

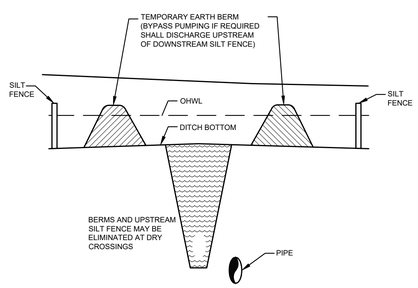

UNDERGROUND PIPE CROSSING

N.T.S.

FIGURE 13

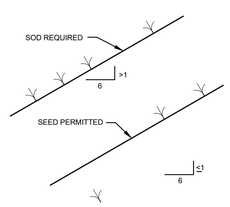

GRASS SLOPES

N.T.S.

FIGURE 14

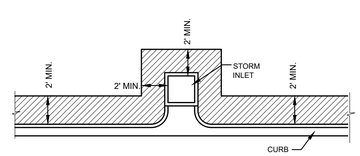

SOD ALONG CURB AND AROUND INLET

N.T.S.

FIGURE 15

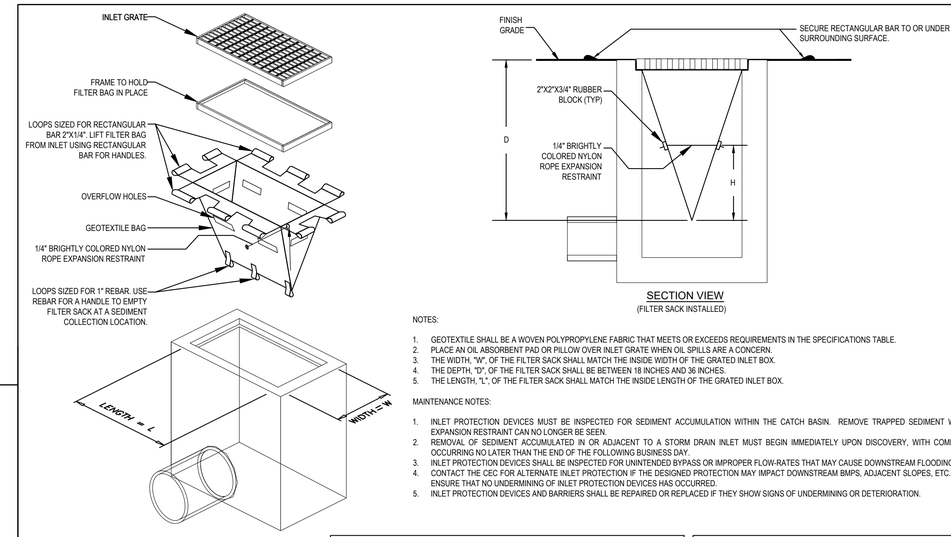

NOTES:

1. GEOTEXTILE SHALL BE A WOVEN POLYPROPYLENE FABRIC THAT MEETS OR EXCEEDS REQUIREMENTS IN THE SPECIFICATIONS TABLE.
2. PLACE AN OIL ABSORBENT PAD OR PILLOW OVER INLET GRATE WHEN OIL SPILLS ARE A CONCERN.
3. THE WIDTH, "W", OF THE FILTER SACK SHALL MATCH THE INSIDE WIDTH OF THE GRATED INLET BOX.
4. THE DEPTH, "D", OF THE FILTER SACK SHALL BE BETWEEN 18 INCHES AND 36 INCHES.
5. THE LENGTH, "L", OF THE FILTER SACK SHALL MATCH THE INSIDE LENGTH OF THE GRATED INLET BOX.

MAINTENANCE NOTES:

1. INLET PROTECTION DEVICES MUST BE INSPECTED FOR SEDIMENT ACCUMULATION WITHIN THE CATCH BASIN. REMOVE TRAPPED SEDIMENT WHEN BRIGHTLY COLORED EXPANSION RESTRAINT CAN NO LONGER BE SEEN.
2. REMOVAL OF SEDIMENT ACCUMULATED IN OR ADJACENT TO A STORM DRAIN INLET MUST BEGIN IMMEDIATELY UPON DISCOVERY, WITH COMPLETION OF THE ACTIVITY OCCURRING NO LATER THAN THE END OF THE FOLLOWING BUSINESS DAY.
3. INLET PROTECTION DEVICES SHALL BE INSPECTED FOR UNINTENDED BYPASS OR IMPROPER FLOW-RATES THAT MAY CAUSE DOWNSTREAM FLOODING.
4. CONTACT THE CEC FOR ALTERNATE INLET PROTECTION IF THE DESIGNED PROTECTION MAY IMPACT DOWNSTREAM BMPS, ADJACENT SLOPES, ETC., DUE TO PONDING ISSUES. ENSURE THAT NO UNDERMINING OF INLET PROTECTION DEVICES HAS OCCURRED.
5. INLET PROTECTION DEVICES AND BARRIERS SHALL BE REPAIRED OR REPLACED IF THEY SHOW SIGNS OF UNDERMINING OR DETERIORATION.

LOW TO MODERATE FLOW GEOTEXTILE FABRIC SPECIFICATION TABLE

PROPERTIES	TEST METHOD	UNITS
GRAB TENSILE STRENGTH	ASTM D-4632	300 LBS
GRAB TENSILE ELONGATION	ASTM D-4632	20 %
PUNCTURE	ASTM D-4833	120 LBS
MULLEN BURST	ASTM D-3786	800 PSI
TRAPEZOID TEAR	ASTM D-4533	120 LBS
UV RESISTANCE	ASTM D-4355	80 %
APPARENT OPENING SIZE	ASTM D-4751	40 US SIEVE
FLOW RATE	ASTM D-4491	40 GAL/MIN/SQ FT
PERMITTIVITY	ASTM D-4491	0.55 SEC -1

MODERATE TO HIGH FLOW GEOTEXTILE FABRIC SPECIFICATION TABLE

PROPERTIES	TEST METHOD	UNITS
GRAB TENSILE STRENGTH	ASTM D-4632	265 LBS
GRAB TENSILE ELONGATION	ASTM D-4632	20 %
PUNCTURE	ASTM D-4833	135 LBS
MULLEN BURST	ASTM D-3786	420 PSI
TRAPEZOID TEAR	ASTM D-4533	45 LBS
UV RESISTANCE	ASTM D-4355	90 %
APPARENT OPENING SIZE	ASTM D-4751	20 US SIEVE
FLOW RATE	ASTM D-4491	200 GAL/MIN/SQ FT
PERMITTIVITY	ASTM D-4491	1.5 SEC -1

FS INLET PROTECTION FILTER SACK

N.T.S.

FOR USE ONLY IN PAVED AREAS WHERE SEDIMENT LOADS ARE EXPECTED TO BE VERY LOW. FILTER SACK MUST HAVE OVERFLOW HOLES TO PREVENT PONDING.

No.	Revisions	Date	By

Kimley»Horn
© 2023 KIMLEY-HORN AND ASSOCIATES, INC.
200 CENTRAL AVE., SUITE 600
ST. PETERSBURG, FL 33701
P: 727 547 3999
WWW.KIMLEY-HORN.COM REGISTRY NO. 35106

DESIGN ENGINEER: SHELBY N. HUGHES, P.E.
FL LICENSE NUMBER 86419
DATE:

SCALE: AS NOTED
DESIGN: SNH
DRAWN: AJO
CHECKED: SAE

SWPPP DETAILS

CITY OF ST. PETE BEACH
PUMP STATION 1 REHABILITATION
PINELLAS COUNY FLORIDA

DATE: DECEMBER 2023

PROJECT NO. 148404075

SHEET NUMBER C-3

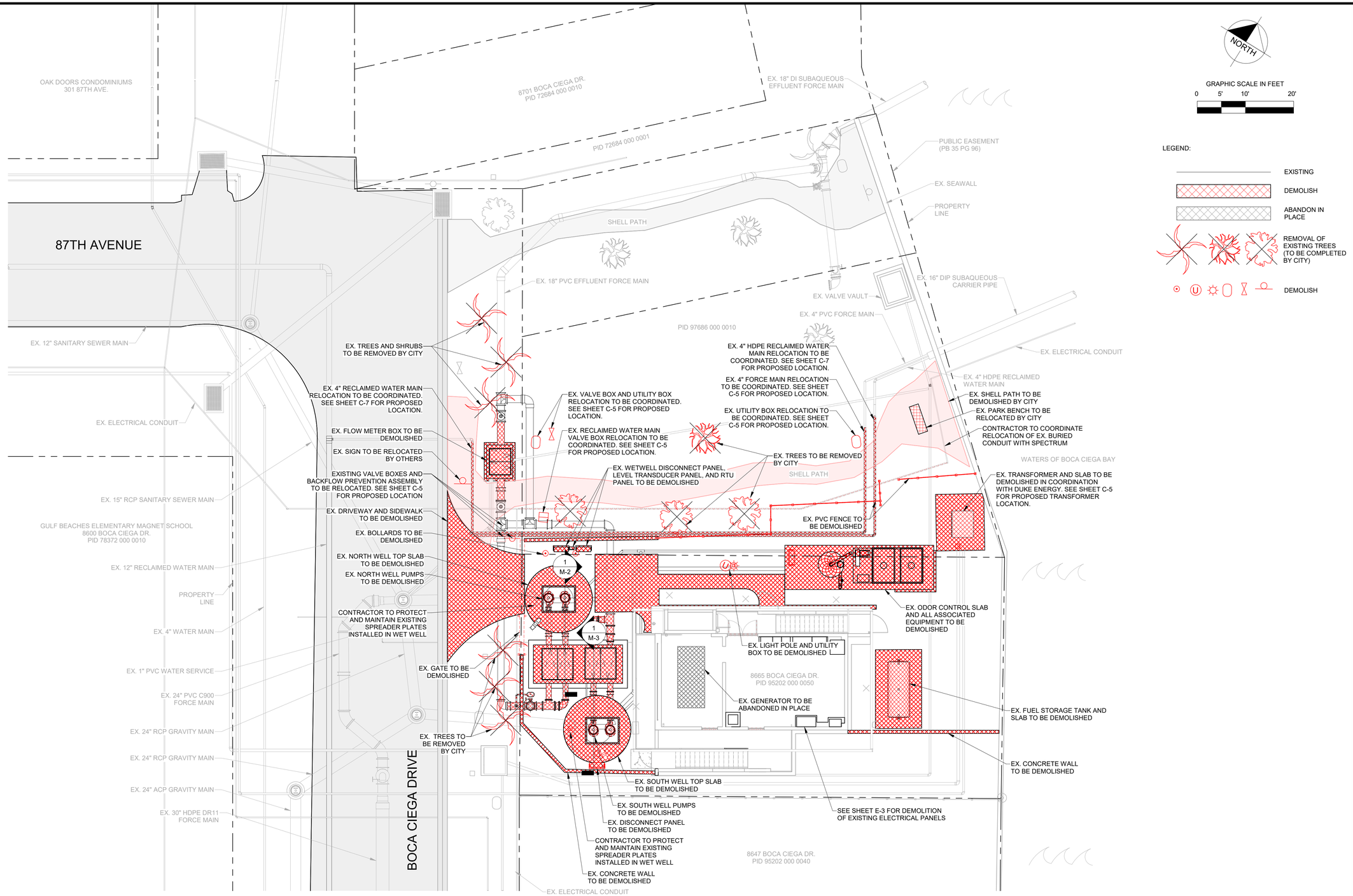

No.	Revisions	Date	By

Kimley»Horn

© 2023 KIMLEY-HORN AND ASSOCIATES, INC.
200 CENTRAL AVENUE, SUITE 600
ST. PETERSBURG, FL 33701
P: 727 547 3999
WWW.KIMLEY-HORN.COM REGISTRY NO. 35106

DESIGN ENGINEER:
SHELBY N. HUGHES, P.E.
FL LICENSE NUMBER 86419
DATE:

SCALE: AS SHOWN
DESIGN: SNH
DRAWN: AJO
CHECKED: SAE

DEMOLITION PLAN

CITY OF ST. PETE BEACH
PUMP STATION 1 REHABILITATION
PINELLAS COUNTY FLORIDA

DATE: DECEMBER 2023
PROJECT NO. 148404075
SHEET NUMBER C-4

811 Know what's below. Call before you dig.

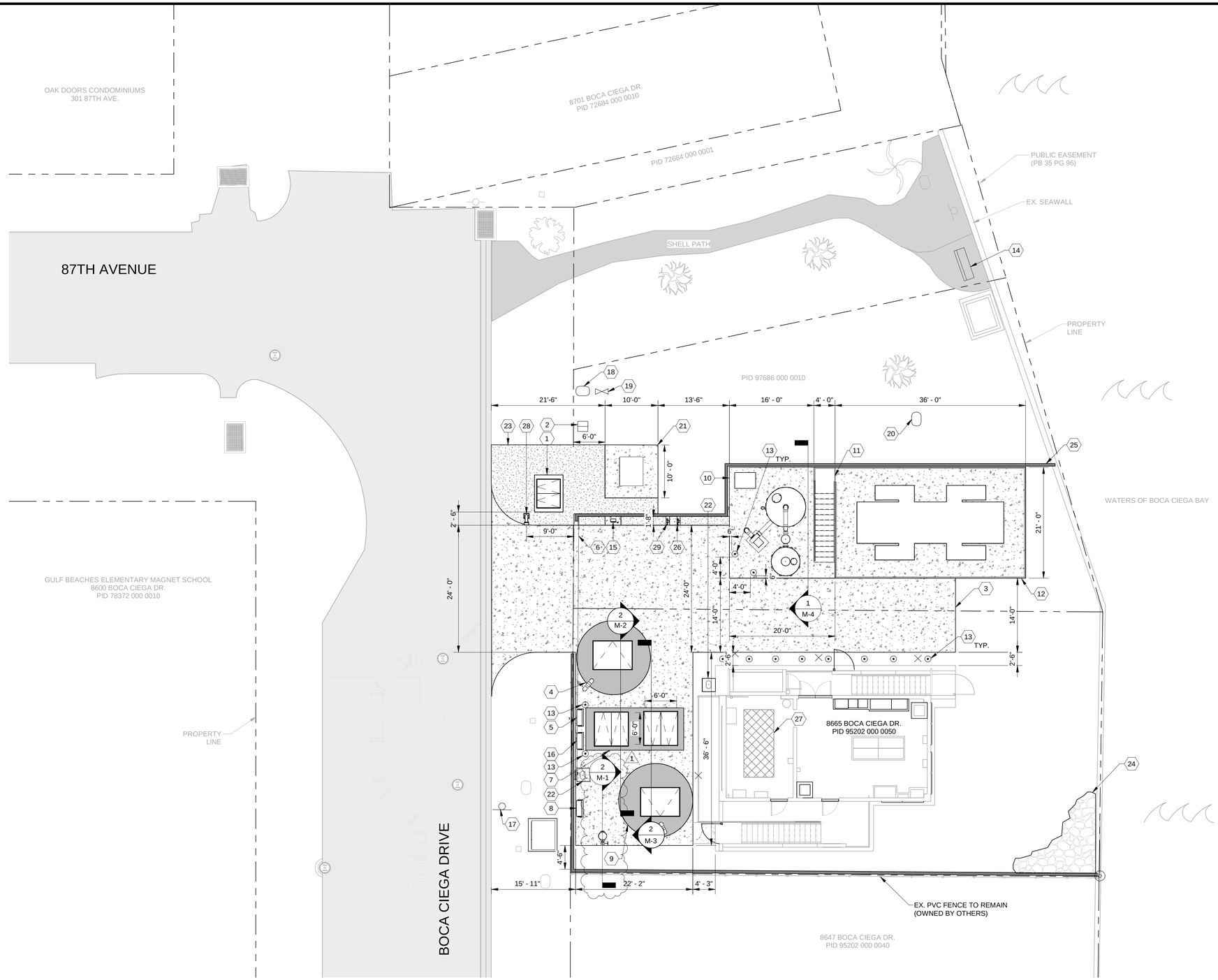

GRAPHIC SCALE IN FEET

0 5' 10' 20'

LEGEND:

EXISTING

PROPOSED

KEYNOTE LEGEND	
KEY VALUE	KEYNOTE TEXT
1	FLOW METER VAULT WITH FLOOD TIGHT ACCESS HATCH - MINIMUM CLEAR SPACE 48" X 60". SEE SHEET S-1.6 FOR DETAILS
2	RECLAIMED WATER MAIN VALVE BOX
3	24' CONCRETE DRIVEWAY
4	NORTH WELL TOP SLAB WITH FLOOD TIGHT ACCESS HATCH - MINIMUM CLEAR SPACE 60" X 84"
5	NORTH WETWELL PUMP DISCONNECTS
6	24' ROLLING ACCESS GATE
7	VALVE VAULT TOP SLAB AND WITH FLOOD TIGHT ACCESS HATCHES - MINIMUM CLEAR SPACE 72" X 72"
8	SOUTH WETWELL PUMP DISCONNECTS
9	SOUTH WELL TOP SLAB WITH FLOOD TIGHT ACCESS HATCH - MINIMUM CLEAR SPACE 60" X 84"
10	ODOR CONTROL SLAB AND EQUIPMENT
11	STAIRS TO GENERATOR SLAB
12	GENERATOR AND ELEVATED SLAB
13	BOLLARD
14	PARK BENCH (TO BE RELOCATED BY CITY)
15	FLOW METER TRANSMITTER WITH SUNSHIELD
16	RTU PANEL
17	LEFT TURN SIGN (RELOCATED BY OTHERS)
18	PROPOSED LOCATION FOR RELOCATED WATER METER
19	PROPOSED LOCATION FOR RELOCATED BACKFLOW PREVENTION ASSEMBLY
20	UTILITY BOX
21	TRANSFORMER AND SLAB
22	ABOVE GROUND ARV AND ENCLOSURE. SEE SHEET M-5 FOR DETAILS
23	CRUSHED SHELL
24	57 STONE, 4" THICK
25	250 LF SIMULATED STONE FENCE, SEE SHEET C-12 FOR DETAILS
26	2" RECLAIMED WATER HOSE BIBB ASSEMBLY. SEE SHEET M-6 FOR DETAILS
27	GENERATOR ROOM (ABANDONED GENERATOR TO REMAIN)
28	PROPOSED GOOSENECK PEDESTAL WITH CARD READER
29	2" POTABLE WATER HOSE BIBB ASSEMBLY. SEE SHEET M-6 FOR DETAILS

No.	Revisions	Date	By
1	IFC REVISION NO. 1	08/20/2024	SNH

Kimley»Horn

© 2023 KIMLEY-HORN AND ASSOCIATES, INC.
200 CENTRAL AVENUE, SUITE 600
ST. PETERSBURG, FL 33701
P: 727 547 3999
WWW.KIMLEY-HORN.COM REGISTRY NO. 35106

DESIGN ENGINEER:
SHELBY N. HUGHES, P.E.
FL LICENSE NUMBER
86419
DATE:

SCALE: AS SHOWN
DESIGN: SNH
DRAWN: AJO
CHECKED: SAE

SITE PLAN

CITY OF ST. PETE BEACH
PUMP STATION 1
REHABILITATION
PINELLAS COUNY FLORIDA

DATE:
AUGUST 2024

PROJECT NO.
148404075

SHEET NUMBER
C-5

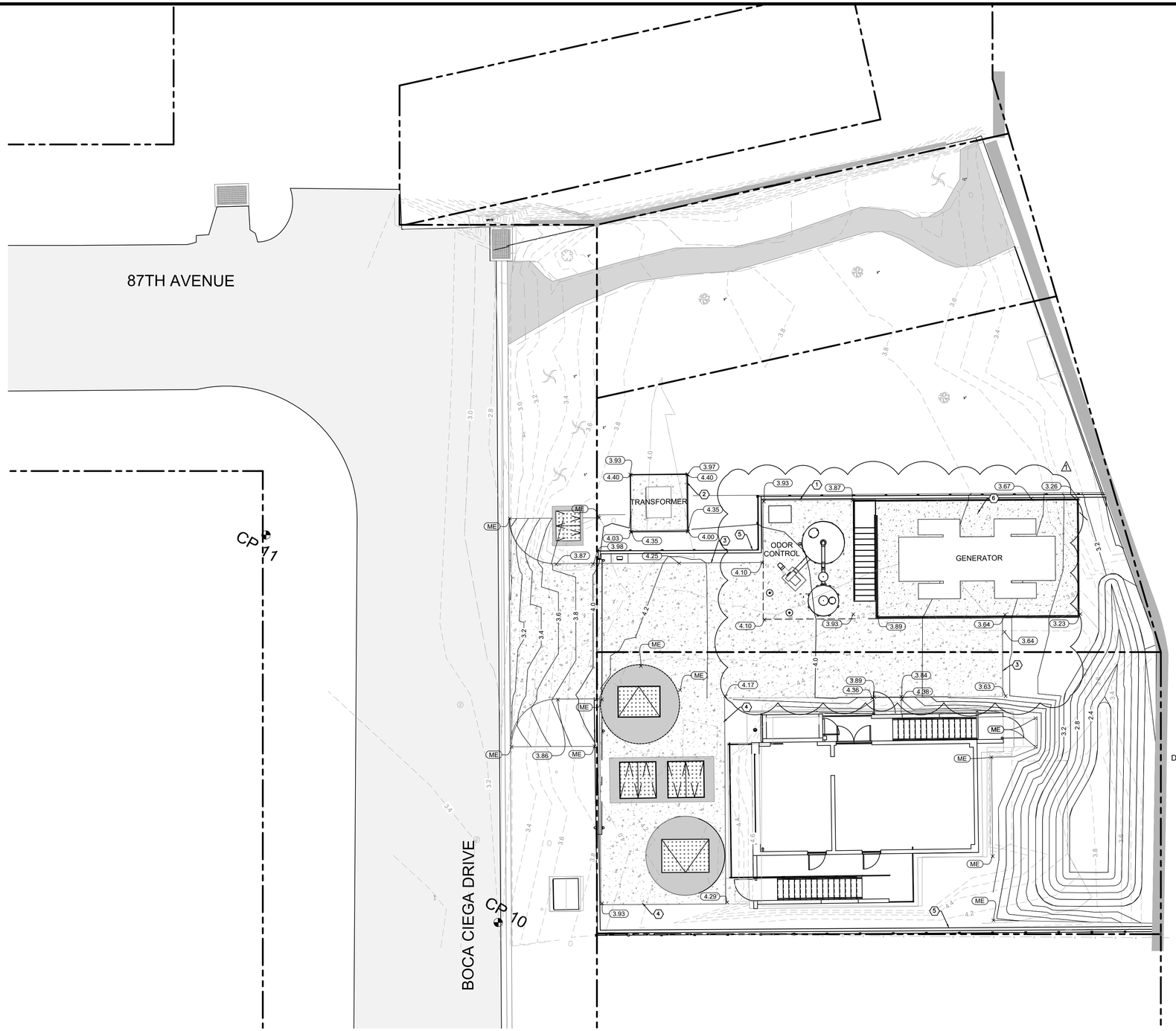

NORTH

GRAPHIC SCALE IN FEET
0 5 10 20

KEYNOTE LEGEND	
KEY VALUES	KEYNOTE TEXT
1	PROPOSED RAISED CONCRETE ODOR CONTROL PAD. SEE STRUCTURAL DETAILS ON SHEET S-1.6
2	PROPOSED RAISED CONCRETE TRANSFORMER PAD. SEE STRUCTURAL DETAILS ON SHEET S-1.6
3	PROPOSED 6" CONCRETE DRIVEWAY. SEE STRUCTURAL DETAILS ON SHEET S-1.6
4	PROPOSED 6" CONCRETE PAD AROUND WETWELL LID AND VALVE VAULT LID. MATCH EXISTING GRADE. SEE STRUCTURAL DETAILS ON SHEET S-1.6
5	PROPOSED 8' TALL SIMULATED STONE FENCE. PHYSICAL COLOR PALETTE MUST BE SUBMITTED TO THE CITY BEFORE APPROVAL OF CONSTRUCTION.
6	PROPOSED ELEVATED SLAB FOR PROPOSED GENERATOR WITH STAIRS. SEE STRUCTURAL DETAILS ON SHEETS S-1.2 AND S-1.3. TOP OF SLAB ELEVATION SHALL BE 9.50'.

SITE CONTROL			
DESIGNATION	NORTHING	EASTING	ELEVATION
CP 10 ND LB 7203	1243087.59	412194.71	3.168'
CP 11 IR LB 7203	1243126.21	412124.56	3.305'

*FOR HORIZONTAL CONTROL, SEE SHEET C-5.

NOTE: SITE IS LOCATED IN FEMA FLOOD ZONE AE (EL. 11) ACCORDING TO MAP NO. 12103C0194H, EFFECTIVE AUGUST 23,2021.

No.	Revisions	Date	By
1	IFC REVISION NO.1	08/20/24	SNH

Kimley»Horn

© 2024 KIMLEY-HORN AND ASSOCIATES, INC.
200 CENTRAL AVE., SUITE 600
ST PETERSBURG, FL 33701
PHONE: 727-547-0399
WWW.KIMLEY-HORN.COM REGISTRY NO. 35106

DESIGN ENGINEER:
SHELBY N. HUGHES, P.E.
FL LICENSE NUMBER
86419
DATE:

SCALE: AS NOTED
DESIGN: SNH
DRAWN: AJO
CHECKED: SAE

GRADING AND DRAINAGE PLAN

CITY OF ST. PETE BEACH
PUMP STATION 1
REHABILITATION
PINELLAS COUNY FLORIDA

DATE:
JULY 2024

PROJECT NO.
148404075

SHEET NUMBER
C-6

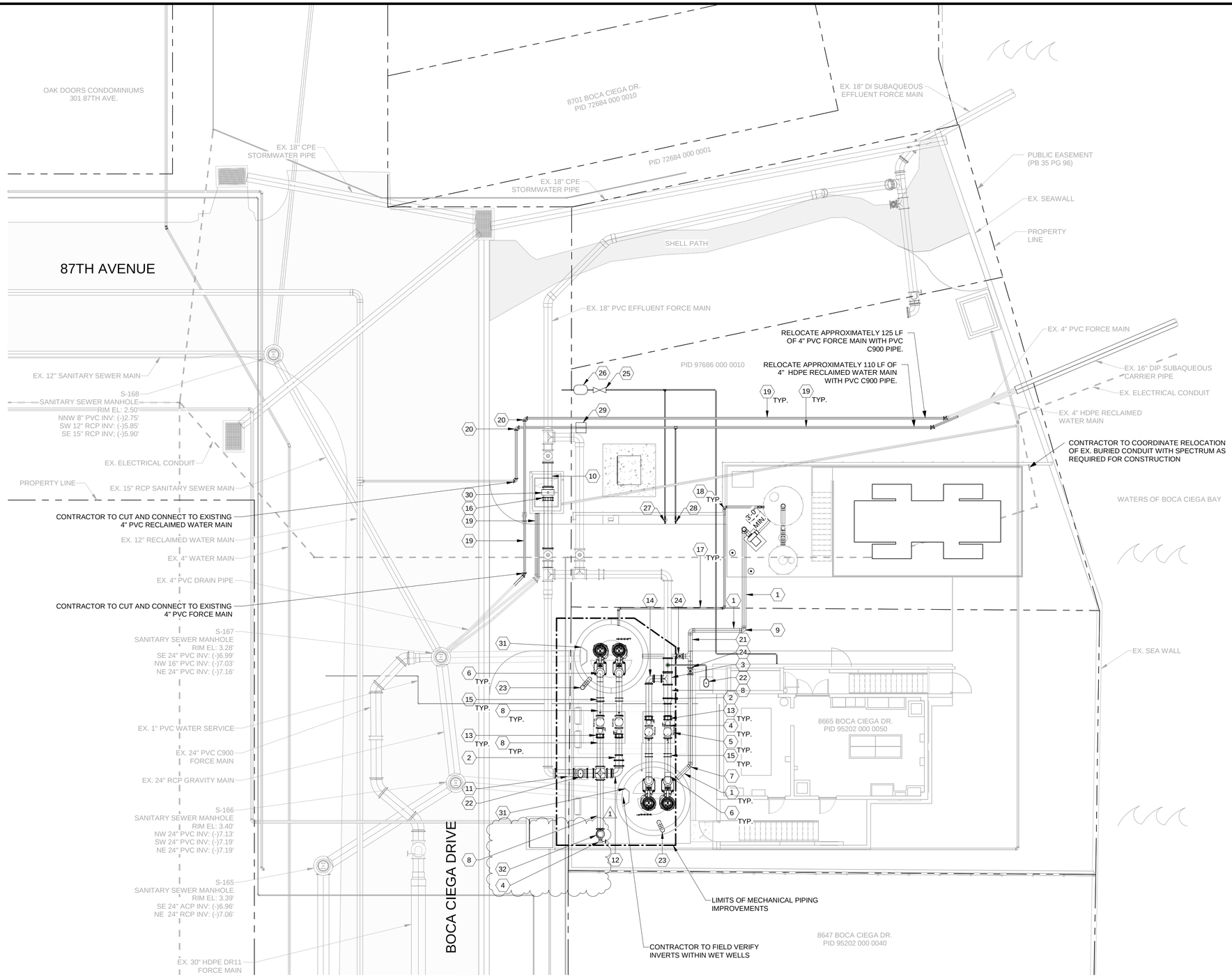

KEYNOTE LEGEND	
KEY VALUE	KEYNOTE TEXT
1	8" SCH80 PVC PIPE
2	16"X12" D.I. REDUCER, MJ*
3	16"X12" D.I. REDUCING TEE, MJ*
4	12" D.I. PLUG VALVE, FL*
5	12" D.I. CHECK VALVE*
6	12" MOLDED HDPE 90 DEG BEND, DIPS*
7	8" SCH80 PVC 45 DEG BEND
8	12" PVC C900 DR 18 PIPE*
9	8" SCH80 PVC 90 DEG BEND
10	18" PVC C900 DR18 PIPE
11	16" PVC C900 DR 18 PIPE*
12	16" D.I. 90 DEG BEND, MJ*
13	12" D.I. FLANGED ADAPTER*
14	12" D.I. 90 DEG BEND, MJ*
15	12" D.I. HDPE TO PVC TRANSITION COUPLING*
16	18" D.I. FLANGED ADAPTER
17	4" SCH80 PVC PIPE
18	4" SCH80 PVC 90 DEG BEND
19	4" PVC C900 PIPE
20	4" D.I. 90 DEG BEND, MJ
21	8" SCH80 PVC TEE
22	ABOVE GROUND ARV AND ENCLOSURE. SEE SHEET M-5 FOR DETAILS
23	8" SCH40 PVC WETWELL VENT PIPE*
24	8" PVC SCH 80 BUTTERFLY DAMPER VALVE
25	PROPOSED LOCATION FOR RELOCATED BACKFLOW PREVENTION ASSEMBLY
26	PROPOSED LOCATION FOR RELOCATED WATER METER
27	2" POTABLE WATER HOSE BIBB ASSEMBLY. SEE SHEET M-6 FOR DETAILS
28	2" RECLAIMED WATER HOSE BIBB ASSEMBLY. SEE SHEET M-6 FOR DETAILS
29	PROPOSED LOCATION FOR RELOCATED RECLAIMED WATER METER BOX
30	PROLINE PROMAG W400 18IN FLOW METER. COORDINATE WITH CITY'S SCADA SUBCONTRACTOR FOR REINSTALLATION, CONTROLS SETUP, AND COMMISSIONING.
31	CONTRACTOR TO PROTECT EXISTING SPREADER PLATES AS NECESSARY
32	12" D.I. BLIND FLANGE

*ITEM INCLUDED IN BID ITEM #15 - MECHANICAL PIPING IMPROVEMENTS

No.	Revisions	Date	By
1	IFC REVISION NO. 1	08/20/2024	SNH

Kimley»Horn

© 2023 KIMLEY-HORN AND ASSOCIATES, INC.
200 CENTRAL AVENUE, SUITE 600
ST. PETERSBURG, FL 33701
P: 727 547 3999
WWW.KIMLEY-HORN.COM REGISTRY NO. 35106

DESIGN ENGINEER:
SHELBY N. HUGHES, P.E.
FL LICENSE NUMBER
86419
DATE:

SCALE: AS SHOWN
DESIGN: SNH
DRAWN: AJO
CHECKED: SAE

YARD PIPING PLAN

CITY OF ST. PETE BEACH
PUMP STATION 1
REHABILITATION
PINELLAS COUNY FLORIDA

DATE:
AUGUST 2024

PROJECT NO.
148404075

SHEET NUMBER
C-7

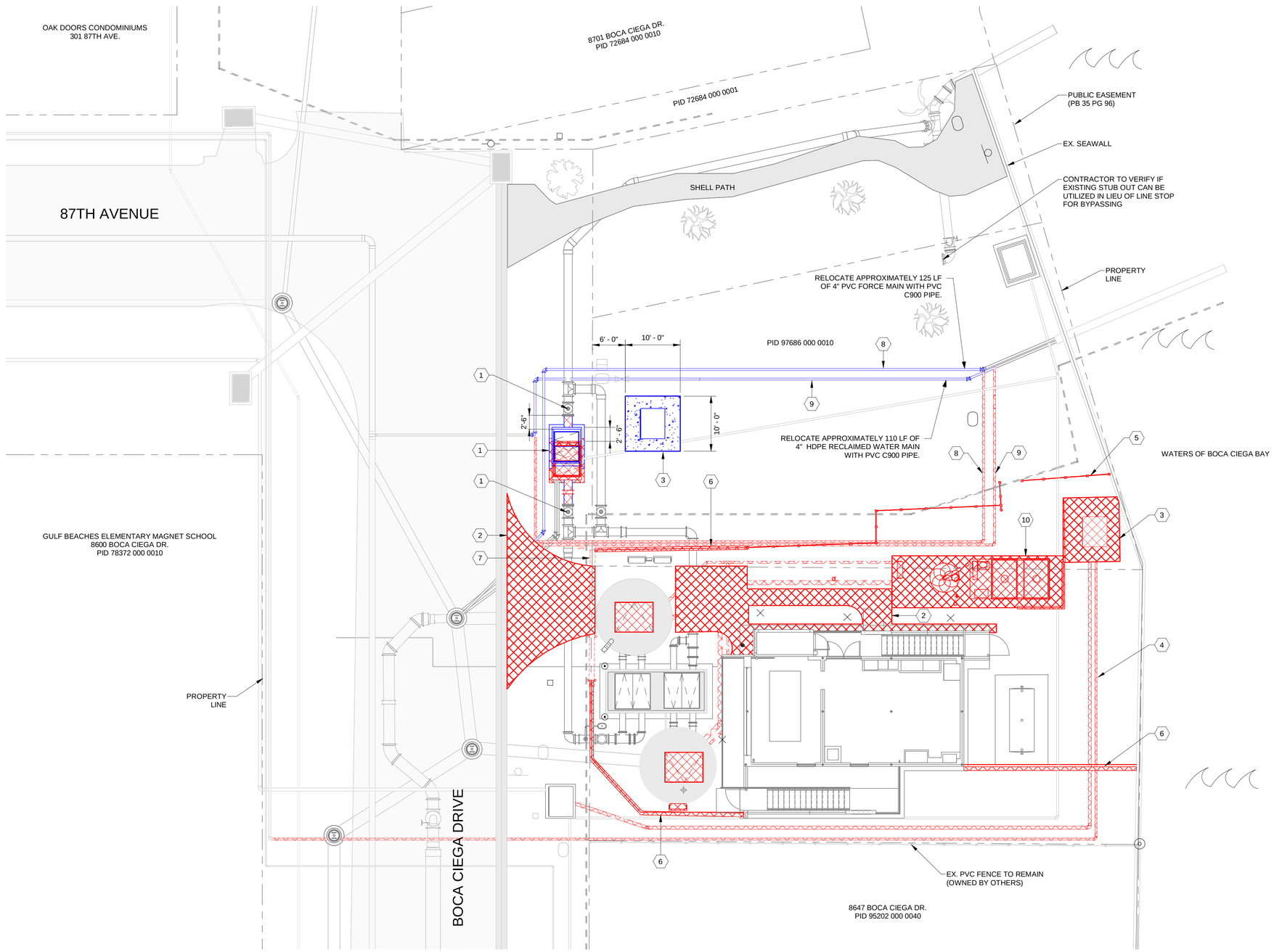

NORTH

GRAPHIC SCALE IN FEET

0 5' 10' 20'

LEGEND:

- EXISTING
- PROPOSED
- DEMOLISH
- ABANDON IN PLACE

KEYNOTE LEGEND	
KEY VALUE	KEYNOTE TEXT
1	CLOSE BOTH PLUG VALVES TO UTILIZE BYPASS FOR FLOW METER AND VAULT RELOCATION. FLOW METER VAULT TO BE REMOVED AND REPLACED WITH 2.5' OF SEPARATION BETWEEN THE NEW VAULT AND THE EXISTING PLAG VALVE. NEW FLOW METER SHALL BE AN 18" PROLINE PROMAG W400 BY ENDRESS AND HAUSER.
2	DEMOLISH EXISTING DRIVEWAY AS NECESSARY FOR FUTURE PHASES.
3	REPLACE TRANSFORMER AND THEN REMOVE EXISTING TRANSFORMER. REMOVAL AND REPLACEMENT TO BE COORDINATED BETWEEN THE CONTRACTOR, DUKE, AND THE CITY. REFER TO DUKE STANDARDS FOR TRANSFORMER PAD DETAILS.
4	DEMOLISH EXISTING TRANSFORMER CONDUIT.
5	DEMOLISH EXISTING PVC FENCING.
6	DEMOLISH EXISTING MASONRY WALL.
7	DEMOLISH EXISTING ACCESS GATE.
8	RELOCATE EXISTING 4" PVC FORCE MAIN.
9	RELOCATE EXISTING 4" HDPE RECLAIMED WATER MAIN.
10	DEMOLISH EXISTING ODOR CONTROL SYSTEM, PIPING, SLAB, AND MASONRY WALL.

No.	Revisions	Date	By

Kimley»Horn

© 2023 KIMLEY-HORN AND ASSOCIATES, INC.
200 CENTRAL AVENUE, SUITE 600
ST. PETERSBURG, FL. 33701
P: 727 547 3999
WWW.KIMLEY-HORN.COM REGISTRY NO. 35106

DESIGN ENGINEER:
SHELBY N. HUGHES, P.E.
FL LICENSE NUMBER
86419
DATE:

SCALE: AS SHOWN
DESIGN: SNH
DRAWN: AJO
CHECKED: SAE

PHASING PLAN - PHASE 1

CITY OF ST. PETE BEACH
PUMP STATION 1 REHABILITATION
PINELLAS COUNY FLORIDA

DATE:
AUGUST 2024

PROJECT NO.
148404075

SHEET NUMBER
C-8

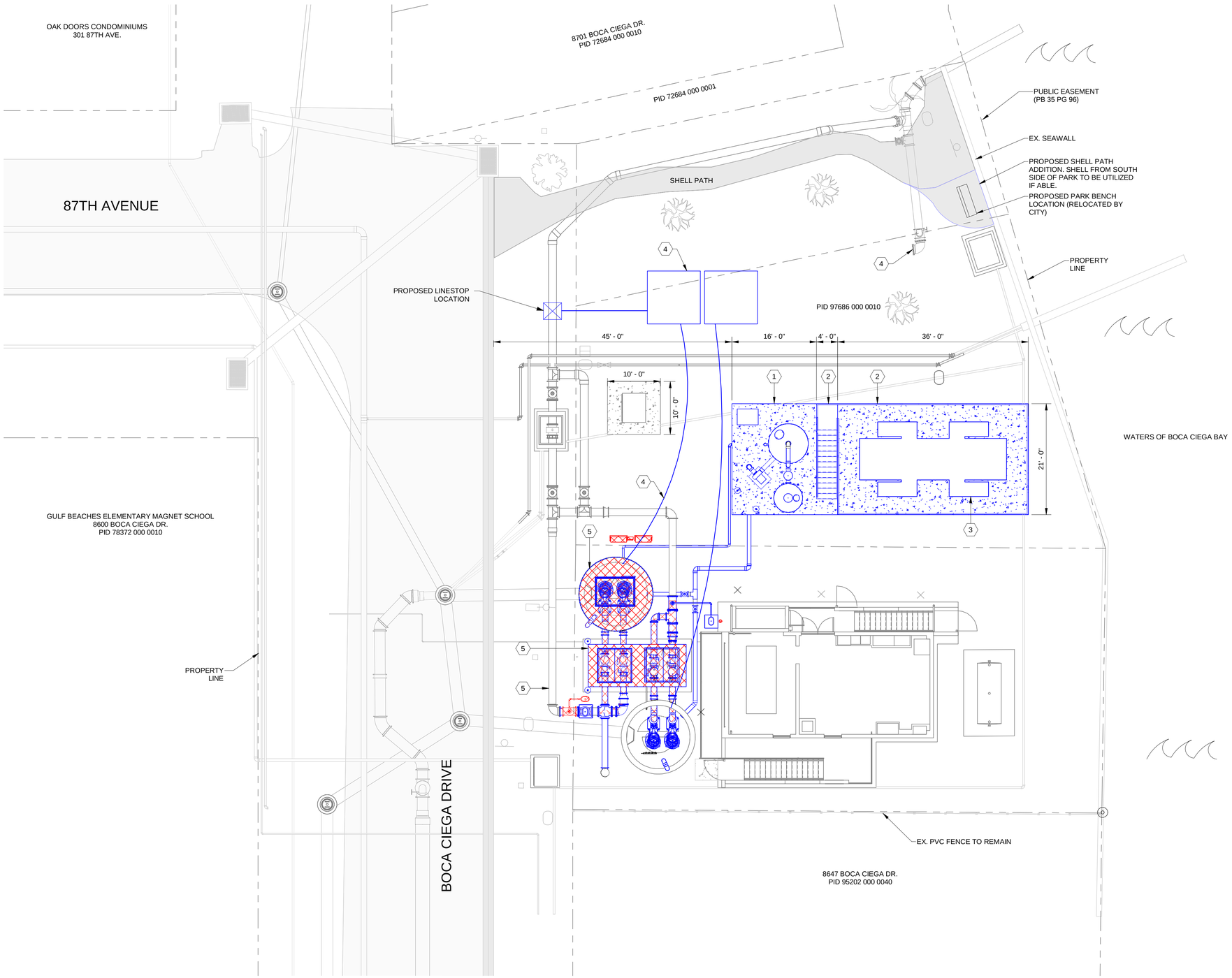

NORTH

GRAPHIC SCALE IN FEET

0 5' 10' 20'

LEGEND:

- EXISTING
- PROPOSED
- DEMOLISH
- ABANDON IN PLACE

KEYNOTE LEGEND

KEY VALUE	KEYNOTE TEXT
1	INSTALL ODOR CONTROL SLAB. SEE SHEET S-1.6 FOR DETAILS. INSTALL ODOR CONTROL SYSTEM: HIBOCS-300, HICARB-75,BLOWER, AND CONTROL PANEL. SEE SHEET M-4 FOR DETAILS. CONSTRUCT 8" PVC SCH80 AIR PIPING TO EACH WETWELL AND A 4" PVC SCH80 DRAIN LINE TO THE NORTH WETWELL. WHEN INSTALLATION AND TESTING HAS BEEN COMPLETED TO THE SATISFACTION OF THE ODOR CONTROL MANUFACTURER'S REPRESENTATIVE, STARTUP THE UNIT TO RESUME NORMAL OPERATION.
2	CONSTRUCT ELEVATED SLAB AND CONNECTING STAIRS. SEE SHEETS S-1.2 AND S-1.3 FOR DETAILS.
3	INSTALL PROPOSED GENERATOR WITH SKID-MOUNTED FUEL TANK.
4	INSTALL LINESTOP ON PROPOSED EFFLUENT FORCE MAIN IF THE ABANDONED PIPING ON THE NORTH SIDE OF THE PARK IS NOT ABLE TO BE USED FOR BYPASSING. CONSTRUCT BYPASS PUMPS TO PULL FLOW FROM THE BOTTOMS OF EACH WETWELL OR FROM THE EXISTING 8" BYPASS PORT LOCATED WEST OF THE SOUTH WETWELL.
5	REMOVE AND REPLACE PIPING, VALVES, AND ASSOCIATED APPURTENANCES TO EACH WETWELL. REMOVE AND REPLACE WETWELL TOP SLABS AND VALVE VAULT TOP SLABS, INCLUDING H20 RATED ACCESS HATCHES. SEE SHEET S-1.4 FOR HATCH DETAILS. INSTALL (4) FLYGT NP3312 215 HP PUMPS, BASE ELBOWS, AND GUIDE RAILS PER MANUFACTURER'S SPECIFICATIONS. INSTALL PRISMATIC SPLITTERS, FLOATS, AND LEVEL TRANSDUCER. CONTRACTOR TO COORDINATE WITH WITH CITY OF ST. PETE BEACH SCADA VENDOR FOR LEVEL TRANSDUCERS AND SCADA IMPLEMENTATION. SEE SHEET M-2 AND M-3 FOR DETAILS ON WETWLL CONSTRUCTION.

No.	Revisions	Date	By

Kimley»Horn

© 2023 KIMLEY-HORN AND ASSOCIATES, INC.
200 CENTRAL AVENUE, SUITE 600
ST. PETERSBURG, FL. 33701
P: 727 547 3999
WWW.KIMLEY-HORN.COM REGISTRY NO. 35106

DESIGN ENGINEER:
SHELBY N. HUGHES, P.E.
FL LICENSE NUMBER
86419
DATE:

SCALE: AS SHOWN
DESIGN: SNH
DRAWN: AJO
CHECKED: SAE

PHASING PLAN - PHASE 2

CITY OF ST. PETE BEACH
PUMP STATION 1
REHABILITATION
PINELLAS COUNY FLORIDA

DATE:
AUGUST 2024

PROJECT NO.
148404075

SHEET NUMBER
C-9

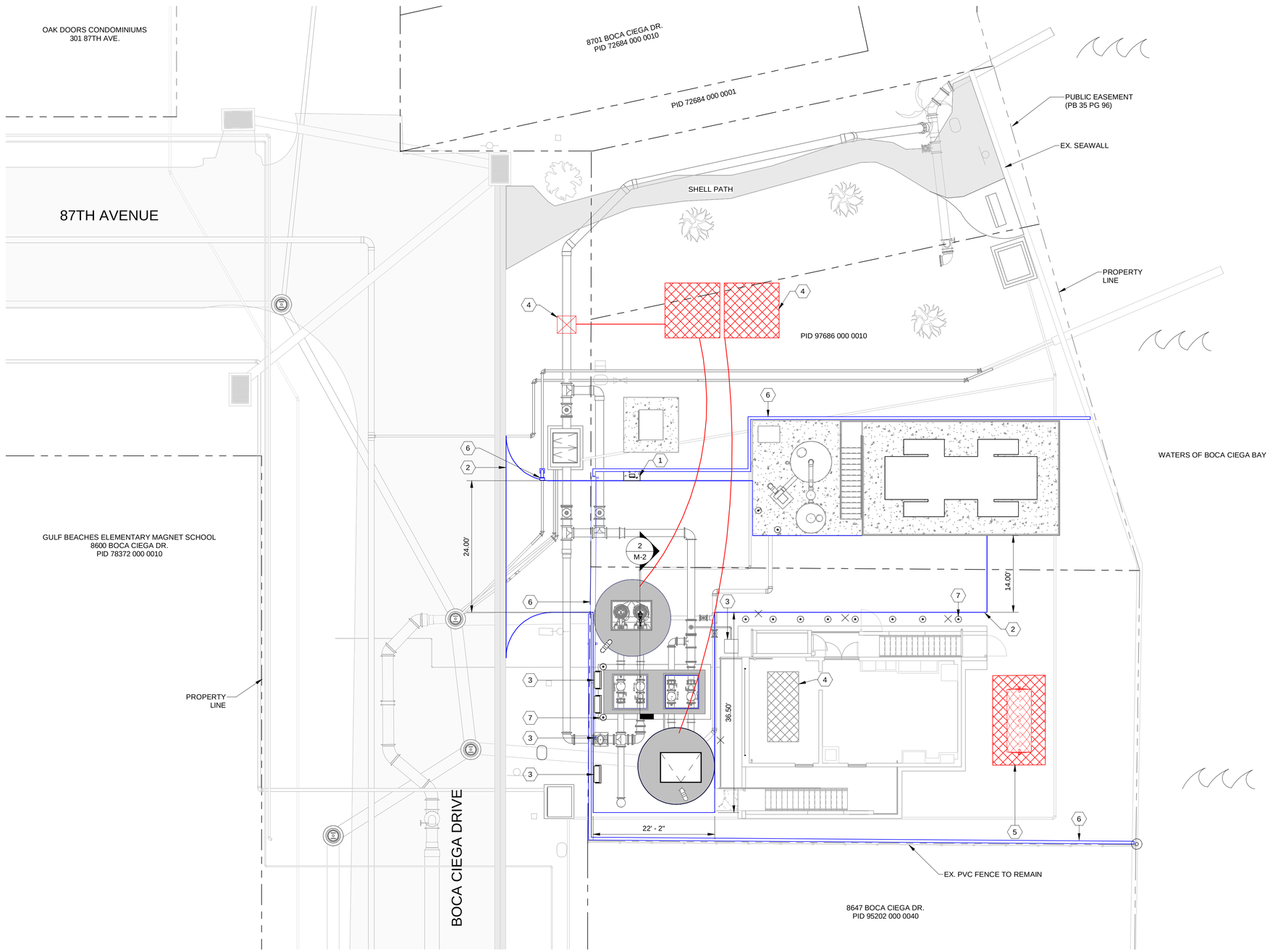

GRAPHIC SCALE IN FEET

0 5' 10' 20'

LEGEND:

- EXISTING
- PROPOSED
- DEMOLISH
- ABANDON IN PLACE

KEYNOTE LEGEND	
KEY VALUE	KEYNOTE TEXT
1	INSTALL FLOW METER TRANSMITTER AND HOSTING PAD.
2	CONSTRUCT 24-FOOT DRIVEWAY. SEE SHEET S-1.6 FOR DETAILS.
3	INSTALL WETWELL DISCONNECT PANELS, RTU PANEL, CAMLOCK ASSEMBLY, AND ENCLOSED ABOVE GRADE ARV ASSEMBLIES.
4	UPON SUCCESSFUL STARTUP OF BOTH WETWELLS (INCLUDING CONNECTIONS TO DIESEL GENERATOR, SCADA SYSTEM, AND FLOW METER) REMOVE BYPASS PUMPS AND PIPING. DECOMMISSION EXISTING GENERATOR AND ABANDON IN PLACE.
5	REMOVE EXISTING FUEL TANK AND HOSTING PAD.
6	INSTALL 8-FOOT SIMULATED STONE SITE FENCE, ACCESS GATE, AND CARD READER ON GOOSENECK PEDESTAL.
7	INSTALL BOLLARDS.

No.	Revisions	Date	By

Kimley»Horn

© 2023 KIMLEY-HORN AND ASSOCIATES, INC.
200 CENTRAL AVENUE, SUITE 600
ST. PETERSBURG, FL 33701
P: 727 547 3999
WWW.KIMLEY-HORN.COM REGISTRY NO. 35106

DESIGN ENGINEER:
SHELBY N. HUGHES, P.E.
FL LICENSE NUMBER
86419
DATE:

SCALE: AS SHOWN
DESIGN: SNH
DRAWN: AJO
CHECKED: SAE

PHASING PLAN - PHASE 3

CITY OF ST. PETE BEACH
PUMP STATION 1
REHABILITATION
PINELLAS COUNY FLORIDA

DATE:
AUGUST 2024

PROJECT NO.
148404075

SHEET NUMBER
C-10

LOCATION OF PUBLIC WATER SYSYEM MAINS IN ACCORDANCE WITH F.A.C. RULE 62-555.314

Other Pipe	Horizontal Separation	Crossings (1)	Joint Spacing @ Crossings (Full Joint Centered)
Storm Sewer, Stormwater Force Main, Reclaimed Water (2)	Water Main 3 ft. minimum	Water Main 12 inches is the minimum, except for storm sewer, then 6 inches is the minimum and 12 inches is preferred	Alternate 3 ft. minimum Water Main
Vacuum Sanitary Sewer	Water Main 10 ft. preferred 3 ft. minimum	Water Main 12 inches preferred 6 inches minimum	Alternate 3 ft. minimum Water Main
Gravity or Pressure Sanitary Sewer, Sanitary Sewer Force Main, Reclaimed Water (4)	Water Main 10 ft. preferred 6 ft. minimum (3)	Water Main 12 inches is the minimum, except for gravity sewer, then 6 inches is the minimum and 12 inches is preferred	Alternate 6 ft. minimum Water Main
On-Site Sewage Treatment & Disposal System	10 ft. minimum	---	---

(1) Water main should cross above other pipe. When water main must be below other pipe, the minimum separation is 12 inches.
(2) Reclaimed water regulated under Part III of Chapter 62-610, F.A.C.
(3) 3 ft. for gravity sanitary sewer where the bottom of the water main is laid at least 6 inches above the top of the gravity sanitary sewer.
(4) Reclaimed water not regulated under Part III of Chapter 62-610, F.A.C.

Disclaimer – This document is provided for your convenience only. Please refer to F.A.C. Rule 62-555.314 for additional construction requirements.

F.A.C. RULE 62-55.314 MAIN CLEARANCES DETAIL
N.T.S.

NOTES:

1. PIPE BEDDING MATERIAL SHALL BE IN ACCORDANCE WITH CITY SPECIFICATIONS OR GOVERNING AGENCY REQUIREMENTS.
2. PROVIDE ADEQUATE CLEARANCE TO PLACE AND COMPACT BEDDING MATERIAL IN TRENCH AREA BELOW PIPE SPRINGLINE. PIPE EMBEDMENT MUST BE COMPACTED OUT TO THE TRENCH WALL OR 2.5 TIMES THE PIPE OD, WHICHEVER IS LESS.
3. TYPICALLY 4" TO 6".
4. PIPE INSTALLATION SHALL BE IN ACCORDANCE WITH THE MANUFACTURER'S WRITTEN INSTRUCTIONS.

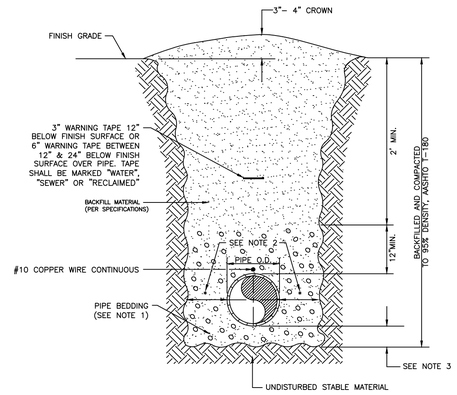

TRENCH WITH UNIMPROVED SURFACE
N.T.S. DATE: 07/10/2019

NOTES:

1. PIPE BEDDING MATERIAL SHALL BE IN ACCORDANCE WITH CITY SPECIFICATIONS OR GOVERNING AGENCY REQUIREMENTS.
2. PROVIDE ADEQUATE CLEARANCE TO PLACE AND COMPACT BEDDING MATERIAL IN TRENCH AREA BELOW PIPE SPRINGLINE. PIPE EMBEDMENT MUST BE COMPACTED OUT TO THE TRENCH WALL OR 2.5 TIMES THE PIPE OD, WHICHEVER IS LESS.
3. TYPICALLY 4" TO 6".
4. PIPE INSTALLATION SHALL BE IN ACCORDANCE WITH THE MANUFACTURER'S WRITTEN INSTRUCTIONS.
5. ASPHALTIC CONCRETE STRUCTURE COURSE WITH PRIME COAT SHALL BE THE SAME DEPTH AND TYPE AS EXISTING OR A MINIMUM OF 1 1/4 INCH, WHICHEVER IS GREATER.
6. ADJUST MILLING PER INDIVIDUAL SITE TO NOT IMPACT BASE. BUTT JOINT TO EXISTING ASPHALT. FINAL OVERLAY LIMITS ARE FROM EDGE OF PAVEMENT TO EDGE OF PAVEMENT. FINAL OVERLAY TO MATCH EXISTING WITH NO DISCERNABLE "BUMP" AT JOINT. MILLING LIMITS THAT IMPACT INTERSECTION SHALL BE ADDRESSED ON A CASE BY CASE BASIS AND APPROVED BY THE CITY OR APPROPRIATE GOVERNING AGENCY.
7. SHEETING ORDERED LEFT IN PLACE TO BE CUT OFF 24" BELOW FINISHED GRADE OR 12" BELOW SUBGRADE.
8. BASE MATERIAL SHALL BE LIME ROCK OR CRUSHED CONCRETE (MIN. LBR 100) AND SHALL BE PLACED IN 6" COMPACTED LAYERS TO 98% OF MAXIMUM DENSITY AS DETERMINED BY AASHTO T-180. AS AN ALTERNATIVE TO COMPACTED BASE AND IN WET AREAS, FULL-LIFT ASPHALTIC CONCRETE, FINE TRAFFIC LEVEL C TYPES SP 9.5 OR 12.5, SHALL BE PLACED IN 2" COMPACTED LAYERS WITH A MINIMUM THICKNESS EQUAL TO THE EXISTING BASE (6" MIN.).
9. TEMPORARY PATCHES WILL BE INSTALLED TO PROVIDE A SMOOTH ALL WEATHER SURFACE AT ALL TIMES. PERMANENT REPLACEMENT TO BE MADE AS SOON AS POSSIBLE.
10. RESTORE SIGNAGE & MARKING WITH THERMOPLASTIC PER FDOT STANDARDS, LATEST EDITION.
11. ASPHALT SURFACE SHALL BE CONSISTENT WITH EXISTING GRADE. THE FOLLOWING ROADWAY CLASSIFICATION TYPE/THICKNESS ARE REQUIRED: ARTERIAL–3" MIN. TYPE SP–12.5 FINE TRAFFIC LEVEL "C"; COLLECTOR–2" MIN. TYPE SP–12.5 FINE TRAFFIC LEVEL "C"; RESIDENTIAL–1½" MIN. TYPE SP–9.5 TRAFFIC LEVEL "C".
12. NOTES 5. THRU 11. ARE MINIMUM REQUIREMENTS FOR A TRENCH IN A ROAD. REFER TO THE CITY SPECIFICATIONS FOR ADDITIONAL REQUIREMENTS.

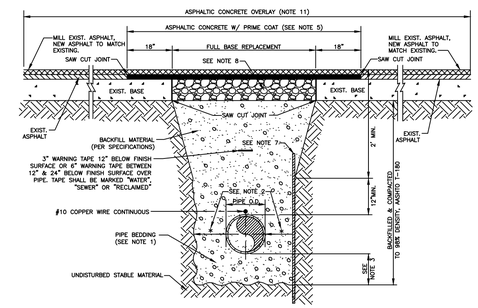

TRENCH WITH ASPHALT PAVEMENT SURFACE RESTORATION
N.T.S. DATE: 07/10/2019

MINIMUM LENGTH (FEET) OF RESTRAINED JOINT PIPE FOR DR-18 PVC PIPE

FITTING TYPE		PIPE SIZE 4"	6"	8"	10"	12"	16"	18"	20"	24"	200psi 30"	36"
90° HORIZ. BEND		17	24	31	37	43	55	60	66	76	119	136
45° HORIZ. BEND		8	10	13	16	18	23	25	28	32	49	56
22.5° HORIZ. BEND		4	5	7	8	9	11	12	13	15	24	27
11.25° HORIZ. BEND		2	3	4	4	5	6	6	7	8	12	14
90° VERT.* OFFSET	UPPER BEND	38	53	70	84	99	115	140	153	179	285	330
	LOWER BEND	38	53	70	84	99	115	140	153	179	285	330
45° VERT. OFFSET	UPPER BEND	16	22	29	35	41	53	58	64	74	118	137
	LOWER BEND	4	6	7	9	10	13	14	15	18	29	33
22.5° VERT. OFFSET	UPPER BEND	8	11	14	17	20	26	28	31	36	57	66
	LOWER BEND	2	3	4	4	5	6	7	8	9	14	16
11.25° VERT. OFFSET	UPPER BEND	4	6	7	9	10	13	14	16	18	29	33
	LOWER BEND	1	1	1	2	3	3	4	4	5	7	8
PLUG/ IN-LINE VALVE		38	53	70	84	99	115	140	153	179	285	330
TEE (BRANCH RESTRAINT)	4"X ø	20	–	–	–	–	–	–	–	–	–	–
	6"X ø	11	35	–	–	–	–	–	–	–	–	–
	8"X ø	2	29	51	–	–	–	–	–	–	–	–
	10"X ø	1	22	46	65	–	–	–	–	–	–	–
	12"X ø	1	15	41	61	79	–	–	–	–	–	–
	16"X ø	1	1	30	52	72	107	–	–	–	–	–
	18"X ø	1	1	24	47	68	104	120	–	–	–	–
	20"X ø	1	1	18	42	64	101	117	133	–	–	–
	24"X ø	1	1	5	32	55	95	112	128	158	–	–
	30"X ø	1	1	1	15	42	84	103	120	152	193	–
	36"X ø	1	1	1	1	26	73	93	111	144	187	226
REDUCER (LARGER PIPE RESTRAINT)	6"X ø	28	–	–	–	–	–	–	–	–	–	–
	8"X ø	50	30	–	–	–	–	–	–	–	–	–
	10"X ø	68	52	28	–	–	–	–	–	–	–	–
	12"X ø	86	72	52	29	–	–	–	–	–	–	–
	16"X ø	117	107	93	75	54	–	–	–	–	–	–
	18"X ø	131	122	110	95	76	29	–	–	–	–	–
	20"X ø	146	138	126	113	96	54	29	–	–	–	–
	24"X ø	173	166	157	146	132	98	77	54	–	–	–
200psi	30"X ø	279	272	262	251	237	201	179	155	100	–	–
	36"X ø	325	320	312	303	291	262	245	225	181	100	–

*PER DIPRA, AS THE BEND ANGLE APPROACHES 90°, LATERAL MOVEMENT OF THE OUTER LEGS APPROACHES ZERO. FOR THIS CONDITION, RESTRAIN ALL PIPE BETWEEN THE FITTINGS AND RESTRAIN THE OUTER LEGS AS DEAD ENDS.

(SOURCES: EBAA IRON RESTRAINT LENGTH CALCULATION PROGRAM FOR PVC PIPE, RELEASE 7.12)

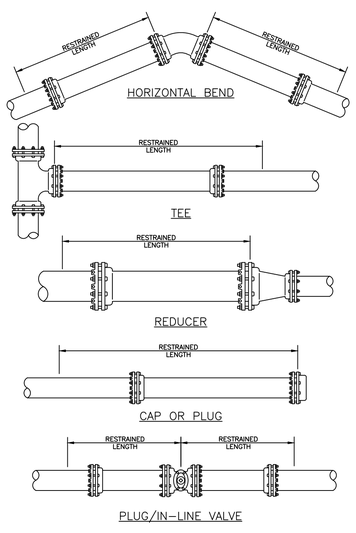

NOTES:
1. THE DATA IN THE ABOVE TABLE ARE BASED UPON THE FOLLOWING INSTALLATION CONDITIONS:
   SOIL TYPE–SP TEST PRESSURE–150/200 PSI
   TRENCH TYPE–3 SAFETY FACTOR– 1.5
   MINIMUM PIPE LENGTH ALONG TEE RUN–5'
   DEPTH OF BURY–3' VERTICAL OFFSET–3'
2. THE RESTRAINED PIPE LENGTHS APPLY TO PVC PIPE.
3. ALL JOINTS BETWEEN UPPER AND LOWER BENDS SHALL BE RESTRAINED.
4. RESTRAINED PIPE LENGTHS APPLY TO PIPE ON BOTH SIDES OF FITTINGS.
5. RESTRAINED JOINTS SHALL EXTEND ONE JOINT BEYOND MIN. LENGTH REQUIRED.

RESTRAINED LENGTH TABLE DETAIL
N.T.S.

NOTES:

1. PIPE BEDDING MATERIAL SHALL BE IN ACCORDANCE WITH CITY SPECIFICATIONS OR GOVERNING AGENCY REQUIREMENTS.
2. PROVIDE ADEQUATE CLEARANCE TO PLACE AND COMPACT BEDDING MATERIAL IN TRENCH AREA BELOW PIPE SPRINGLINE. PIPE EMBEDMENT MUST BE COMPACTED OUT TO THE TRENCH WALL OR 2.5 TIMES THE PIPE OD, WHICHEVER IS LESS.
3. TYPICALLY 4" TO 6".
4. PIPE INSTALLATION SHALL BE IN ACCORDANCE WITH THE MANUFACTURER'S WRITTEN INSTRUCTIONS.
5. THICKNESS TO MATCH EXISTING OR BE 8" MINIMUM, WHICHEVER IS GREATER.
6. SHEETING ORDERED LEFT IN PLACE TO BE CUT OFF 24" BELOW FINISHED GRADE OR 12" BELOW SUBGRADE.
8. BASE MATERIAL SHALL BE LIME ROCK OR CRUSHED CONCRETE (MIN. LBR 100) AND SHALL BE PLACED IN 6" COMPACTED LAYERS TO 98% OF MAXIMUM DENSITY AS DETERMINED BY AASHTO T-180. AS AN ALTERNATIVE TO COMPACTED BASE AND IN WET AREAS, FULL-LIFT ASPHALTIC CONCRETE, FINE TRAFFIC LEVEL C TYPES SP 9.5 OR 12.5, SHALL BE PLACED IN 2" COMPACTED LAYERS WITH A MINIMUM THICKNESS EQUAL TO THE EXISTING BASE (6" MIN.).
9. TEMPORARY PATCHES WILL BE INSTALLED TO PROVIDE A SMOOTH ALL WEATHER SURFACE AT ALL TIMES. PERMANENT REPLACEMENT TO BE MADE AS SOON AS POSSIBLE.
10. NOTES 5. THRU 8. ARE MINIMUM REQUIREMENTS. REFER TO CITY SPECIFICATIONS FOR ADDITIONAL REQUIREMENTS.

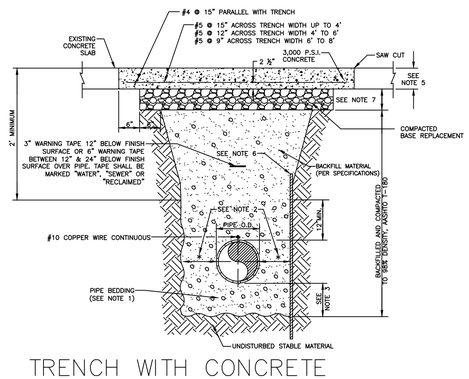

TRENCH WITH CONCRETE PAVEMENT SURFACE RESTORATION
N.T.S. DATE: 07/10/2019

NOTES:

1. PIPE BEDDING MATERIAL SHALL BE IN ACCORDANCE WITH CITY SPECIFICATIONS OR GOVERNING AGENCY REQUIREMENTS.
2. PROVIDE ADEQUATE CLEARANCE TO PLACE AND COMPACT BEDDING MATERIAL IN TRENCH AREA BELOW PIPE SPRINGLINE. PIPE EMBEDMENT MUST BE COMPACTED OUT TO THE TRENCH WALL OR 2.5 TIMES THE PIPE OD, WHICHEVER IS LESS.
3. TYPICALLY 4" TO 6".
4. PIPE INSTALLATION SHALL BE IN ACCORDANCE WITH THE MANUFACTURER'S WRITTEN INSTRUCTIONS.
5. THICKNESS TO MATCH EXISTING OR BE 6" MINIMUM, WHICHEVER IS GREATER.
6. SHEETING ORDERED LEFT IN PLACE TO BE CUT OFF 24" BELOW FINISH GRADE OR 12" BELOW SUBGRADE.
7. BASE SHALL BE COMPACTED 6" MINIMUM THICKNESS OF APPROVED MATERIAL.
8. DRIVEWAYS SHALL BE CONSTRUCTED IN ACCORDANCE WITH CITY SPECIFICATIONS.
9. IF THE DRIVEWAY IS 12' OR WIDER, SAWCUT AN EXPANSION JOINT ALONG THE CENTER OF THE DRIVEWAY (⅜" WIDE AND ½" DEEP) AFTER THE CONCRETE HAS SET.
10. IF THERE IS AN EXISTING EXPANSION JOINT WITHIN 3' OF THE PROPOSED JOINT, EXTEND DRIVEWAY REPLACEMENT TO THE EXISTING JOINT.

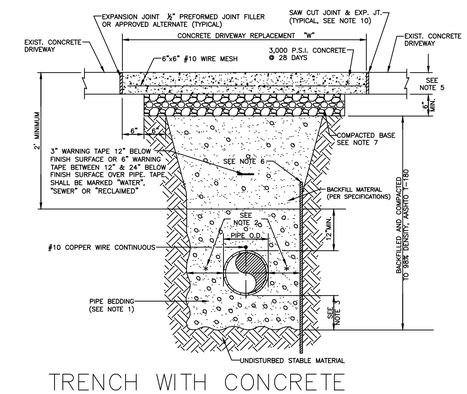

TRENCH WITH CONCRETE DRIVEWAY SURFACE RESTORATION
N.T.S. DATE: 07/10/2019

No.	Revisions	Date	By

Kimley»Horn
© 2023 KIMLEY-HORN AND ASSOCIATES, INC.
200 CENTRAL AVENUE, SUITE 600
ST. PETERSBURG, FL 33701
P: 727 547 3999
WWW.KIMLEY-HORN.COM REGISTRY NO. 35106

DESIGN ENGINEER: SHELBY N. HUGHES, P.E.
FL LICENSE NUMBER 86419
SCALE: AS NOTED
DESIGN: SNH
DRAWN: AJO
CHECKED: SAE
DATE:

CIVIL DETAILS

CITY OF ST. PETE BEACH
PUMP STATION 1
REHABILITATION
PINELLAS COUNY FLORIDA

DATE: DECEMBER 2023
PROJECT NO. 148404075
SHEET NUMBER C-11

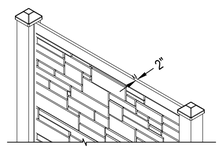

ISOMETRIC VIEW

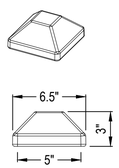

CAPS

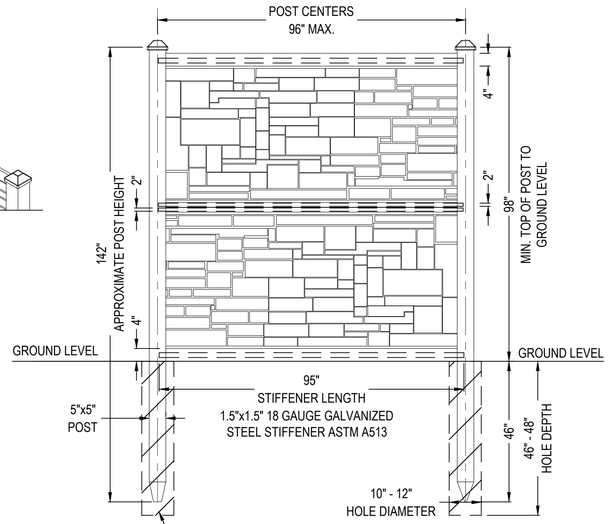

- MADE WITH LINEAR LOW DENSITY POLYETHYLENE PLASTIC (LLDPE).
- ACTUAL PANEL DIMENSIONS: 48"H x 94.25"W
- PANEL WEIGHT 60LBS
- TOLERANCES ARE ± .5"

CONCRETE FOOTING DIAMETER 10" - 12" MIN. AND 46" TO 48" DEEP MIN. IN ACCORDANCE WITH LOCAL CONDITIONS, CODES, AND STANDARD BUILDING PRACTICES

ELEVATION VIEW

8–FOOT SIMULATED STONE FENCE

N.T.S.

No.	Revisions	Date	By

Kimley»Horn

© 2023 KIMLEY-HORN AND ASSOCIATES, INC.
200 CENTRAL AVE., SUITE 600
ST. PETERSBURG, FL 33701
P: 727.547.3999
WWW.KIMLEY-HORN.COM REGISTRY NO. 35106

DESIGN ENGINEER:
SHELBY N. HUGHES, P.E.
FL LICENSE NUMBER
86419
DATE:

SCALE: AS NOTED
DESIGN: SNH
DRAWN: AJO
CHECKED: SAE

CIVIL DETAILS

CITY OF ST. PETE BEACH
PUMP STATION 1
REHABILITATION
PINELLAS COUNY FLORIDA

DATE:
DECEMBER 2023

PROJECT NO.
148404075

SHEET NUMBER
C-12

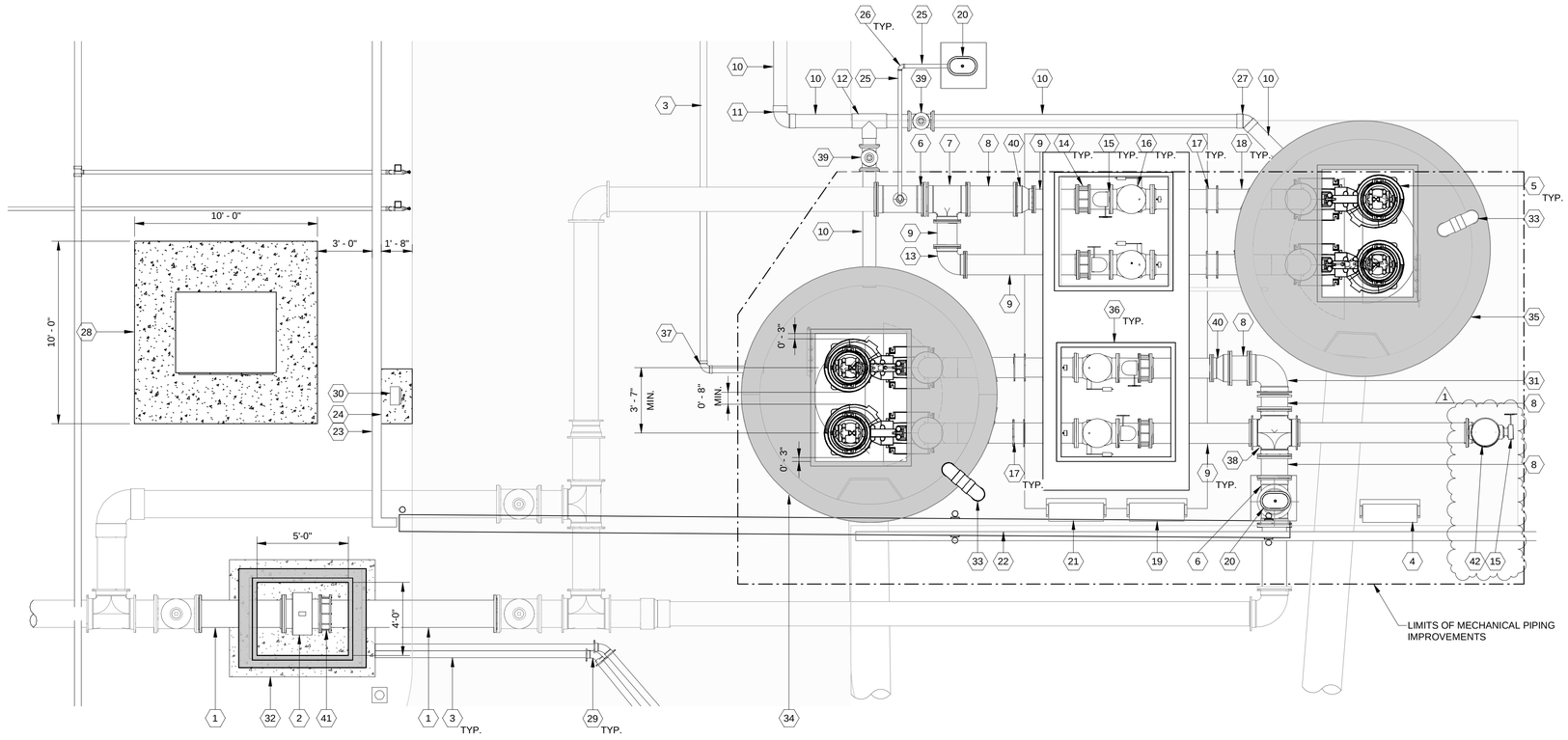

1 / M-1 MECHANICAL PLAN

SCALE: 1/4" = 1'-0"

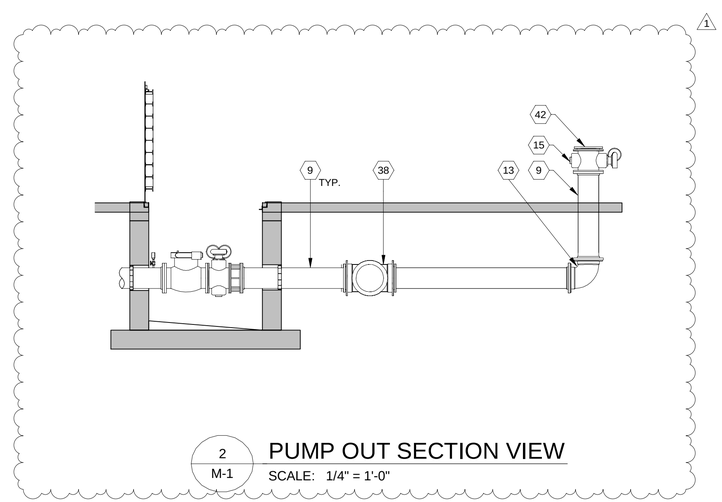

2 / M-1 PUMP OUT SECTION VIEW

SCALE: 1/4" = 1'-0"

GRAPHIC SCALE IN FEET

0 2' 4' 8'

LEGEND:

EXISTING

PROPOSED

KEYNOTE LEGEND

KEY VALUE	KEYNOTE TEXT
1	18" PVC C900 DR18 PIPE
2	PROLINE PROMAG W400 18IN FLOW METER. COORDINATE WITH CITY'S SCADA SUBCONTRACTOR FOR REINSTALLATION, CONTROLS SETUP, AND COMMISSIONING.
3	4" SCH80 PVC PIPE
4	SOUTH WETWELL PUMP DISCONNECTS
5	FLYGT NP3312 215 HP SUBMERSIBLE PUMP
6	16" D.I. TEE WITH BLIND FLANGE AND 2" TAP, MJ*
7	16"X12" D.I. REDUCING TEE, MJ*
8	16" PVC C900 DR 18 PIPE*
9	12" PVC C900 DR 18 PIPE*
10	8" SCH80 PVC PIPE
11	8" SCH80 PVC 90 DEG BEND
12	8" SCH80 PVC TEE
13	12" D.I. 90 DEG BEND, MJ*
14	12" D.I. FLANGED ADAPTER*
15	12" D.I. PLUG VALVE, FL*
16	12" D.I. CHECK VALVE*
17	12" D.I. HDPE TO PVC TRANSITION COUPLING*
18	12" HDPE DR 11 DIPS PIPE*
19	RTU PANEL
20	ABOVE GROUND ARV AND ENCLOSURE. SEE SHEET M-5 FOR DETAILS
21	NORTH WETWELL PUMP DISCONNECTS
22	24' ROLLING ACCESS GATE
23	250 LF SIMULATED STONE FENCE, SEE SHEET C-12 FOR DETAILS
24	18"X36" FLOW METER TRANSMITTER HOSTING PAD
25	2" 316 S.STL. PIPE
26	2" 316 S.STL. 90 DEG BEND
27	8" SCH80 PVC 45 DEG BEND
28	TRANSFORMER AND SLAB
29	4" PVC SCH40 45 DEG BEND
30	FLOW METER TRANSMITTER WITH SUNSHIELD
31	16" D.I. 90 DEG BEND, MJ*
32	FLOW METER VAULT WITH FLOOD TIGHT ACCESS HATCH - MINIMUM CLEAR SPACE 48" X 60". SEE SHEET S-1.6 FOR DETAILS
33	8" SCH40 PVC WETWELL VENT PIPE*
34	NORTH WELL TOP SLAB WITH FLOOD TIGHT ACCESS HATCH - MINIMUM CLEAR SPACE 60" X 84"
35	SOUTH WELL TOP SLAB WITH FLOOD TIGHT ACCESS HATCH - MINIMUM CLEAR SPACE 60" X 84"
36	VALVE VAULT TOP SLAB AND WITH FLOOD TIGHT ACCESS HATCHES - MINIMUM CLEAR SPACE 72" X 72"
37	4" SCH80 PVC 90 DEG BEND
38	16"X12" D.I. CROSS, MJ*
39	8" PVC SCH 80 BUTTERFLY DAMPER VALVE
40	16"X12" D.I. REDUCER, MJ*
41	18" D.I. FLANGED ADAPTER
42	12" D.I. BLIND FLANGE

*ITEM INCLUDED IN BID ITEM #15 - MECHANICAL PIPING IMPROVEMENTS

No.	Revisions	Date	By
1	IFC REVISION NO. 1	08/20/2024	SNH

Kimley»Horn

© 2023 KIMLEY-HORN AND ASSOCIATES, INC.

200 CENTRAL AVENUE, SUITE 600
ST. PETERSBURG, FL 33701
P: 727 547 3999
WWW.KIMLEY-HORN.COM REGISTRY NO. 35106

DESIGN ENGINEER:
SHELBY N. HUGHES, P.E.
FL LICENSE NUMBER 86419
DATE:

SCALE: AS SHOWN
DESIGN: SNH
DRAWN: AJO
CHECKED: SAE

MECHANICAL PLAN

CITY OF ST. PETE BEACH
PUMP STATION 1 REHABILITATION
PINELLAS COUNY FLORIDA

DATE: AUGUST 2024

PROJECT NO. 148404075

SHEET NUMBER M-1

GRAPHIC SCALE IN INCHES

0 2' 4'

0 3/4" 1-1/2"

LEGEND:

EXISTING

PROPOSED

DEMOLITION

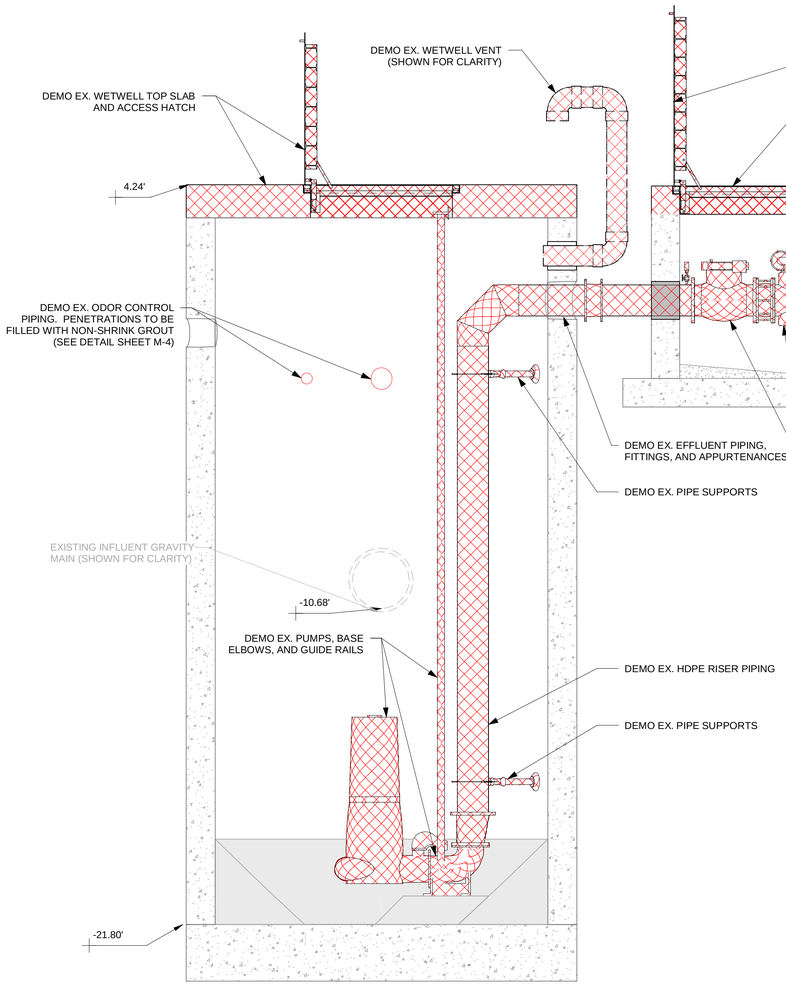

1 M-2 NORTH WELL DEMOLITION SECTION

SCALE: 3/8" = 1'-0"

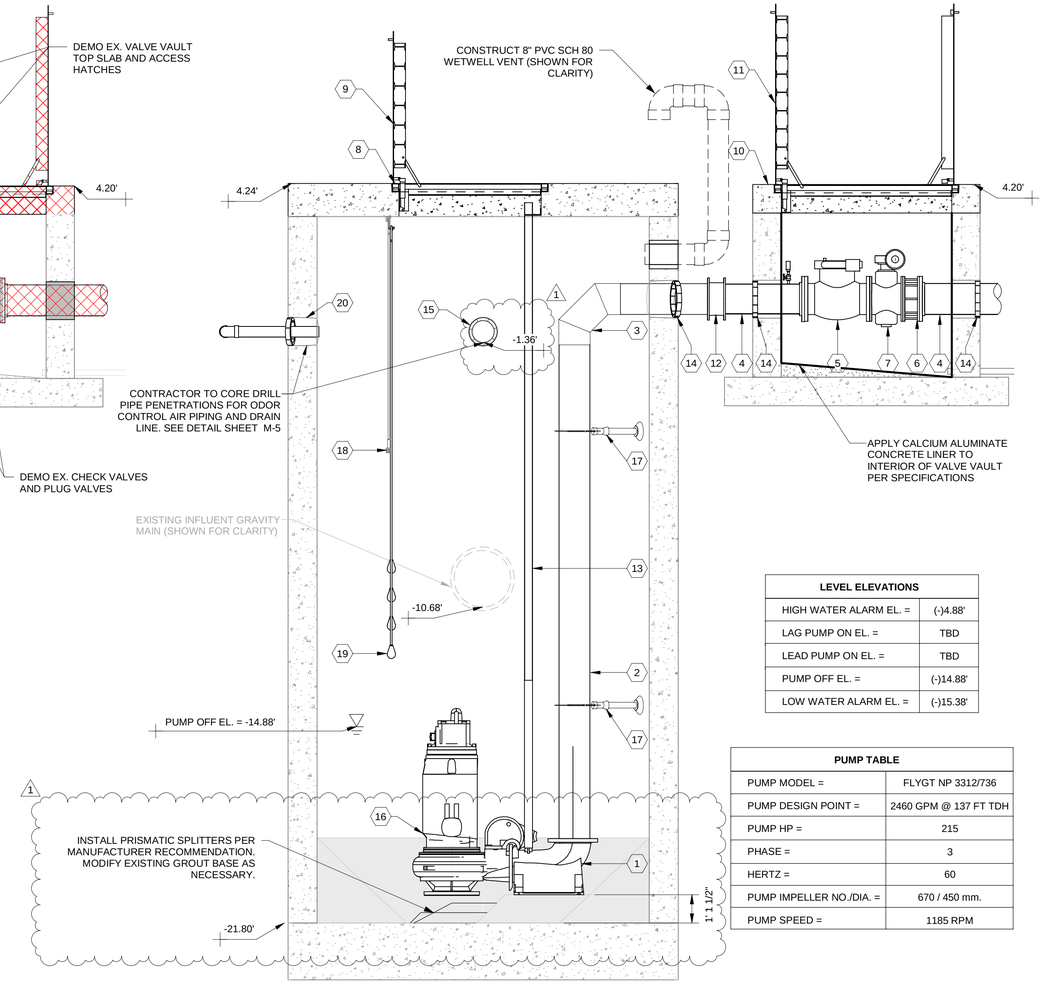

2 M-2 NORTH WELL PROPOSED SECTION

SCALE: 3/8" = 1'-0"

KEYNOTE LEGEND	
KEY VALUE	KEYNOTE TEXT
1	10" BPIU PUMP BASE ELBOW
2	12" HDPE DR 11 DIPS PIPE*
3	12" MOLDED HDPE 90 DEG BEND, DIPS*
4	12" PVC C900 DR 18 PIPE*
5	12" D.I. CHECK VALVE*
6	12" D.I. FLANGED ADAPTER*
7	12" D.I. PLUG VALVE, FL*
8	14" CONCRETE WET WELL TOP SLAB
9	FLOOD TIGHT ALUMINUM PUMP ACCESS HATCH WITH 84" X 60" CLEAR OPENING
10	14" CONCRETE VALVE VAULT TOP SLAB
11	72" X 72" ALUMINUM ACCESS HATCH
12	12" D.I. HDPE TO PVC TRANSITION COUPLING*
13	PUMP GUIDE RAILS
14	16" LINK SEAL, CORED*
15	12" LINK SEAL, CORED
16	FLYGT NP3312 215 HP SUBMERSIBLE PUMP
17	316 SS SADDLE PIPE SUPPORT*
18	LEVEL TRANSDUCER. COORDINATE WITH CITY'S SCADA SUBCONTRACTOR FOR REINSTALLATION, CONTROLS SETUP, AND COMMISSIONING.
19	LEVEL FLOATS
20	8" LINK SEAL, CORED

*ITEM INCLUDED IN BID ITEM #15 - MECHANICAL PIPING IMPROVEMENTS

LEVEL ELEVATIONS	
HIGH WATER ALARM EL. =	(-)4.88'
LAG PUMP ON EL. =	TBD
LEAD PUMP ON EL. =	TBD
PUMP OFF EL. =	(-)14.88'
LOW WATER ALARM EL. =	(-)15.38'

PUMP TABLE	
PUMP MODEL =	FLYGT NP 3312/736
PUMP DESIGN POINT =	2460 GPM @ 137 FT TDH
PUMP HP =	215
PHASE =	3
HERTZ =	60
PUMP IMPELLER NO./DIA. =	670 / 450 mm.
PUMP SPEED =	1185 RPM

Know what's below. Call before you dig.

No.	Revisions	Date	By
1	IFC REVISION NO. 1	08/20/2024	SNH

Kimley»Horn

© 2023 KIMLEY-HORN AND ASSOCIATES, INC.

200 CENTRAL AVENUE, SUITE 600
ST. PETERSBURG, FL 33701
P: 727 547 3999
WWW.KIMLEY-HORN.COM REGISTRY NO. 35106

DESIGN ENGINEER: SHELBY N. HUGHES, P.E.
FL LICENSE NUMBER 86419
DATE:

SCALE: AS SHOWN
DESIGN: SNH
DRAWN: AJO
CHECKED: SAE

NORTH WELL MECHANICAL SECTION

CITY OF ST. PETE BEACH
PUMP STATION 1 REHABILITATION
PINELLAS COUNTY FLORIDA

DATE: AUGUST 2024

PROJECT NO. 148404075

SHEET NUMBER M-2

GRAPHIC SCALE IN INCHES

0 2' 4'

0 3/4" 1-1/2"

LEGEND:

EXISTING

PROPOSED

DEMOLITION

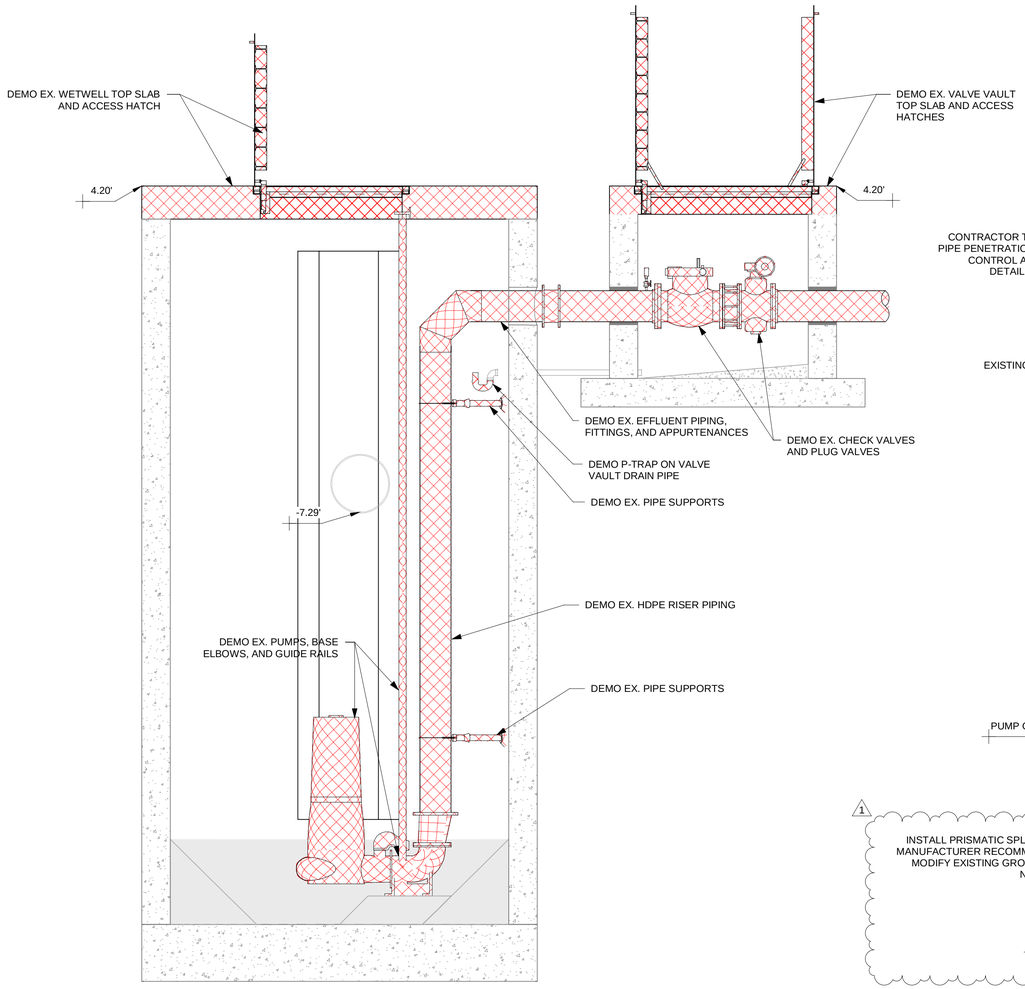

1 M-3 SOUTH WELL DEMOLITION SECTION

SCALE: 3/8" = 1'-0"

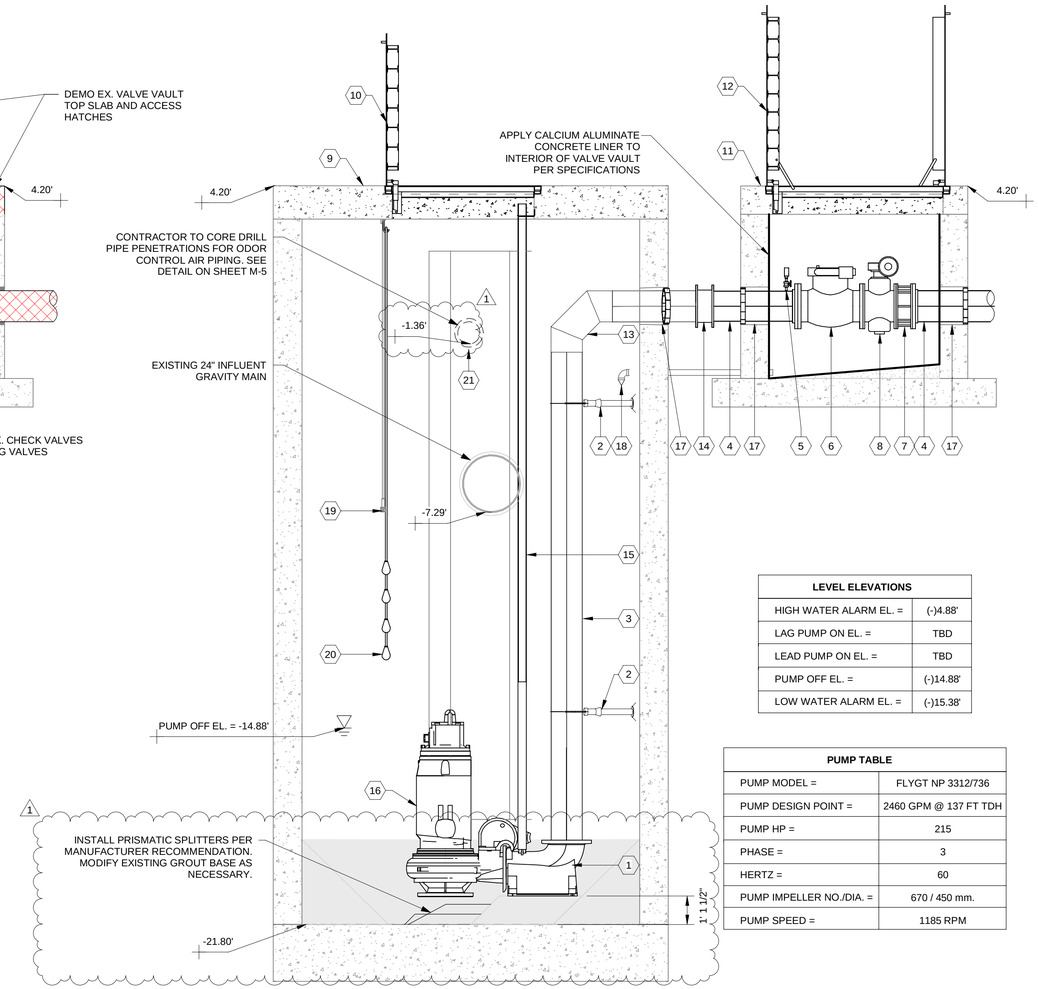

2 M-3 SOUTH WELL PROPOSED SECTION

SCALE: 3/8" = 1'-0"

KEYNOTE LEGEND	
KEY VALUE	KEYNOTE TEXT
1	10" BPIU PUMP BASE ELBOW
2	316 SS SADDLE PIPE SUPPORT*
3	12" HDPE DR 11 DIPS PIPE*
4	12" PVC C900 DR 18 PIPE*
5	PRESSURE GAUGE*
6	12" D.I. CHECK VALVE*
7	12" D.I. FLANGED ADAPTER*
8	12" D.I. PLUG VALVE, FL*
9	14" CONCRETE WET WELL TOP SLAB
10	FLOOD TIGHT ALUMINUM PUMP ACCESS HATCH WITH 84" X 60" CLEAR OPENING
11	14" CONCRETE VALVE VAULT TOP SLAB
12	72" X 72" ALUMINUM ACCESS HATCH
13	12" MOLDED HDPE 90 DEG BEND, DIPS*
14	12" D.I. HDPE TO PVC TRANSITION COUPLING*
15	PUMP GUIDE RAILS
16	FLYGT NP3312 215 HP SUBMERSIBLE PUMP
17	16" LINK SEAL, CORED*
18	2" DUCK BILL CHECK VALVE*
19	LEVEL TRANSDUCER. COORDINATE WITH CITY'S SCADA SUBCONTRACTOR FOR REINSTALLATION, CONTROLS SETUP, AND COMMISSIONING.
20	LEVEL FLOATS
21	12" LINK SEAL, CORED

*ITEM INCLUDED IN BID ITEM #15 - MECHANICAL PIPING IMPROVEMENTS

LEVEL ELEVATIONS	
HIGH WATER ALARM EL. =	(-)4.88'
LAG PUMP ON EL. =	TBD
LEAD PUMP ON EL. =	TBD
PUMP OFF EL. =	(-)14.88'
LOW WATER ALARM EL. =	(-)15.38'

PUMP TABLE	
PUMP MODEL =	FLYGT NP 3312/736
PUMP DESIGN POINT =	2460 GPM @ 137 FT TDH
PUMP HP =	215
PHASE =	3
HERTZ =	60
PUMP IMPELLER NO./DIA. =	670 / 450 mm.
PUMP SPEED =	1185 RPM

Know what's below. Call before you dig.

No.	Revisions	Date	By
1	IFC REVISION NO. 1	08/20/2024	SNH

Kimley»Horn

© 2023 KIMLEY-HORN AND ASSOCIATES, INC.

200 CENTRAL AVENUE, SUITE 600
ST. PETERSBURG, FL 33701
P: 727 547 3999
WWW.KIMLEY-HORN.COM REGISTRY NO. 35106

DESIGN ENGINEER:
SHELBY N. HUGHES, P.E.
FL LICENSE NUMBER 86419
DATE:

SCALE: AS SHOWN
DESIGN: SNH
DRAWN: AJO
CHECKED: SAE

SOUTH WELL MECHANICAL SECTION

CITY OF ST. PETE BEACH
PUMP STATION 1 REHABILITATION
PINELLAS COUNY FLORIDA

DATE: AUGUST 2024

PROJECT NO. 148404075

SHEET NUMBER M-3

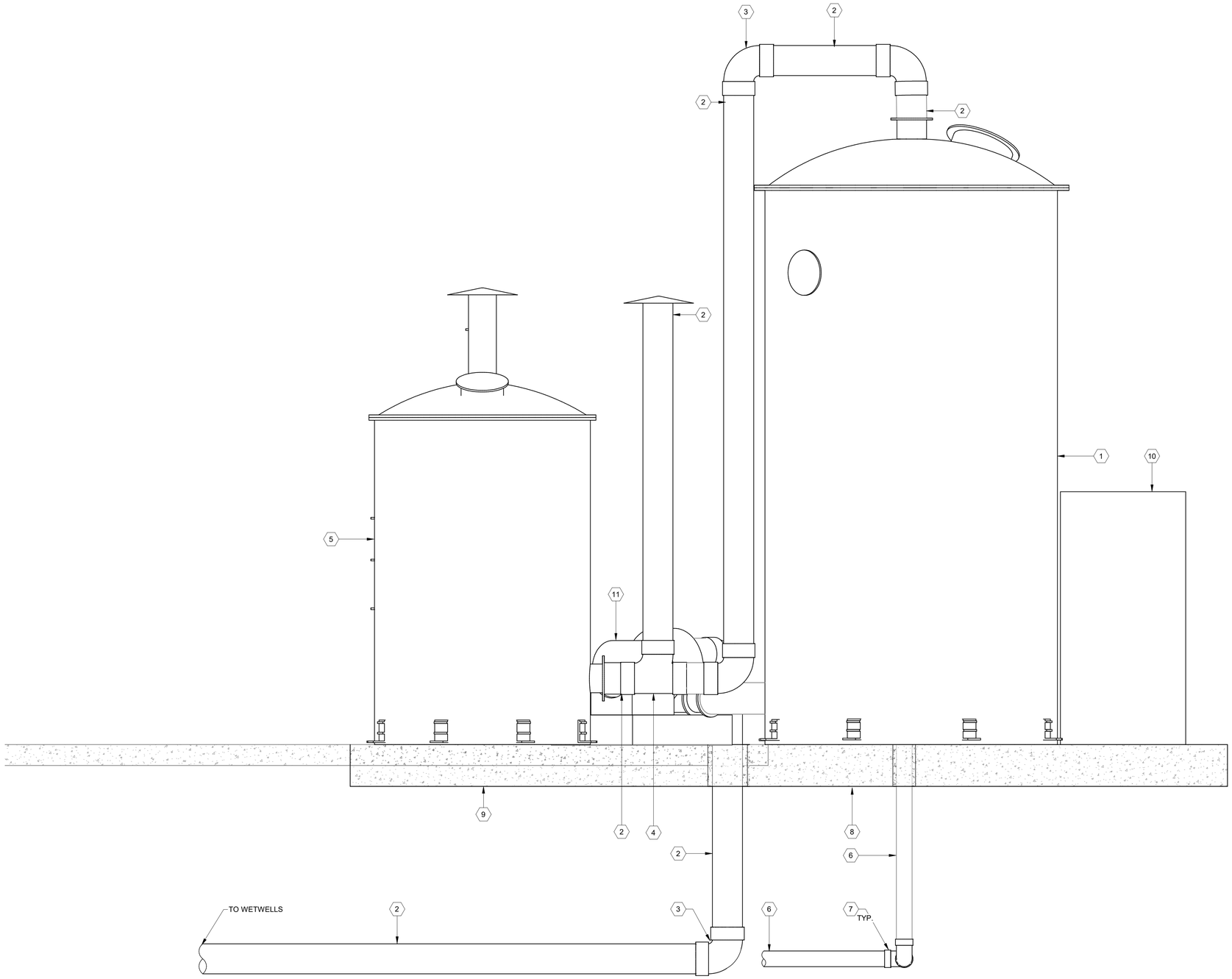

1
M-4

ODOR CONTROL SECTION

SCALE: 3/4" = 1'-0"

GRAPHIC SCALE IN INCHES

0 1' 2'

0 3/4" 1-1/2"

LEGEND:

EXISTING

PROPOSED

KEYNOTE LEGEND	
KEY VALUE	KEYNOTE TEXT
1	HIBCOCS 300 BIO-SCRUBBER
2	8" SCH80 PVC PIPE
3	8" SCH80 PVC 90 DEG BEND
4	8" SCH80 PVC TEE
5	HICARB 75 VERTICAL CARBON SCRUBBER
6	4" SCH80 PVC PIPE
7	4" SCH80 PVC 90 DEG BEND
8	ODOR CONTROL SLAB AND EQUIPMENT
9	24' CONCRETE DRIVEWAY
10	ODOR CONTROL SKID
11	ODOR CONTROL BLOWER

No.	Revisions	Date	By

Kimley»Horn

© 2023 KIMLEY-HORN AND ASSOCIATES, INC.

200 CENTRAL AVENUE, SUITE 600
ST. PETERSBURG, FL 33701
P: 727 547 3999
WWW.KIMLEY-HORN.COM REGISTRY NO. 35106

DESIGN ENGINEER:
SHELBY N. HUGHES, P.E.
FL LICENSE NUMBER
86419
DATE:

SCALE: AS SHOWN
DESIGN: SNH
DRAWN: AJO
CHECKED: SAE

ODOR CONTROL SECTION

CITY OF ST. PETE BEACH
PUMP STATION 1
REHABILITATION
PINELLAS COUNY FLORIDA

DATE:
DECEMBER 2023

PROJECT NO.
148404075

SHEET NUMBER
M-4

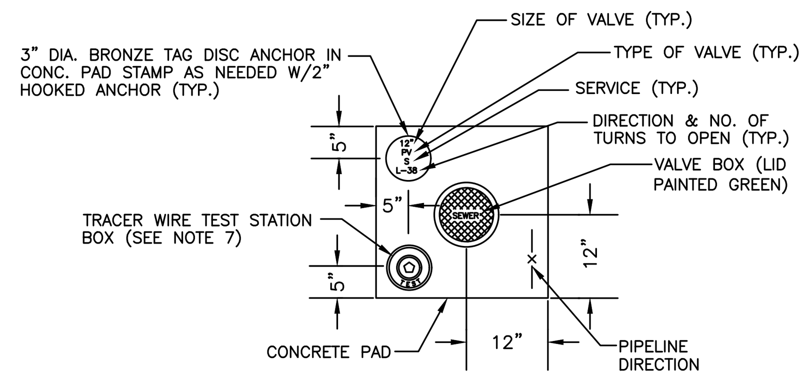

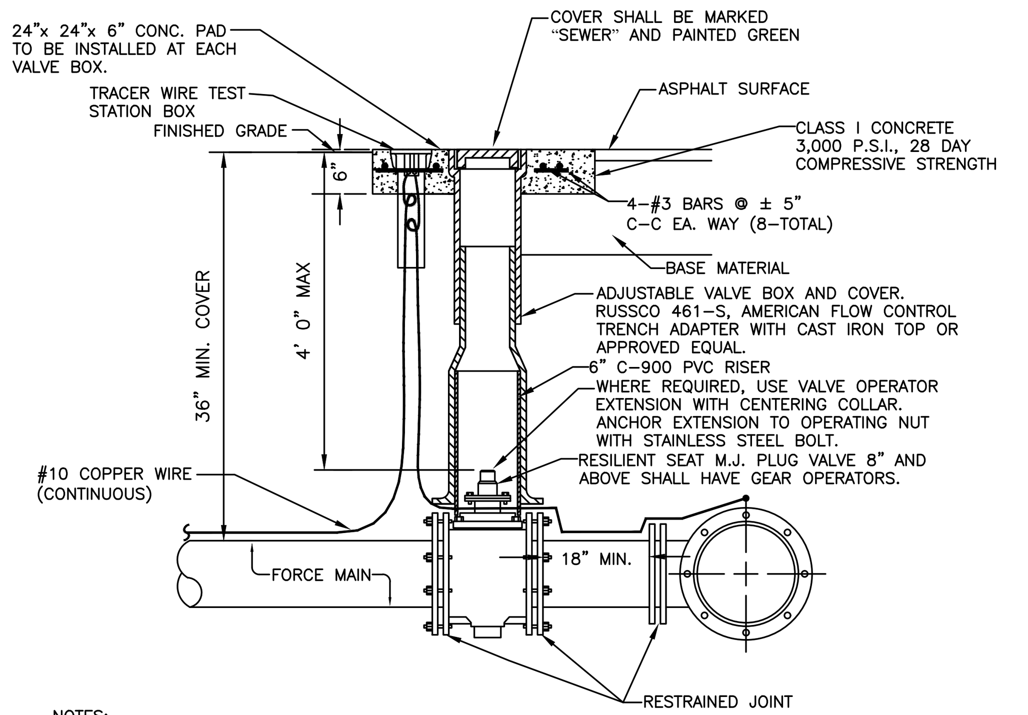

NOTES:

1. "SV" TO BE IMPRESSED INTO THE NEWLY-POURED CONCRETE CURB, ALONG WITH DISTANCE IN FEET TO THE VALVE. IF NO CURB, INSTALL A GREEN DISC WITH "SV" AND A 1/8"x1" GALVANIZED STEEL SCREW IN THE EDGE OF PAVEMENT WITH THE DISTANCE (FT.) FROM THE DISC TO THE VALVE.
2. ALL EXISTING AND PROPOSED VALVE BOXES SHALL BE ADJUSTED TO FINISHED GRADES AS ESTABLISHED IN THE FIELD.
3. SEWER VALVES SHALL NOT BE PLACED IN HANDICAPPED RAMPS.
4. PRECAST CONCRETE PADS SHALL NOT BE USED.
5. ALL EXPOSED EDGES OF CONCRETE SHALL BE CHAMFERED 1/2".
6. PLUG VALVES SHALL NOT BE USED AS A TAPPING VALVE. WHERE AN EXISTING FORCE MAIN IS TO BE TAPPED, USE A TAPPING GATE VALVE PER THE TAPPING SLEEVE AND VALVE DETAIL.
7. TEST BOX TO BE BINGHAM & TAYLOR P200NFG OR EQUAL FOR NORMAL YARD SERVICE. WHERE VALVE WILL BE IN STREET OR UNDER VEHICLE TRAFFIC, USE P525RD CENTERED IN SEPARATE CONCRETE PAD SIMILAR TO STANDARD VALVE BOX PAD.

PLUG VALVE, BOX, COVER AND TAG DETAIL

N.T.S.

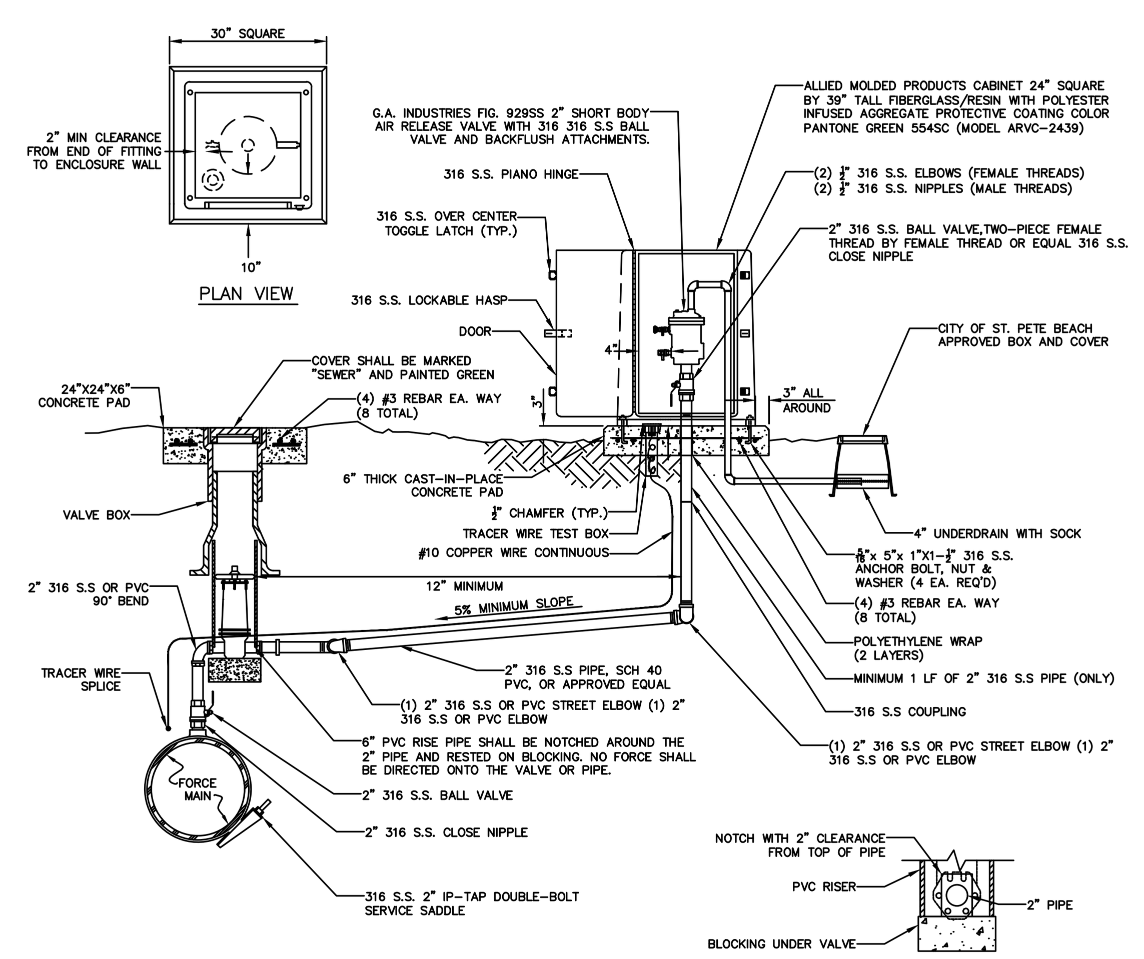

NOTES:

1. AIR RELEASE VALVES TO BE INSTALLED AT HIGH POINTS, OR WHERE AIR WOULD BE ENTRAPPED, ALONG 4" AND LARGER FORCE MAINS.
2. FORCE MAIN VERTICAL ALIGNMENT TO BE DESIGNED SUCH THAT THE MINIMUM NUMBER OF REQUIRED AIR RELEASE VALVES ARE INSTALLED.
3. ALL INCIDENTAL FITTINGS AND HARDWARE TO BE 316 STAINLESS STEEL.
4. ALL PIPE THREADS TO BE SEALED AIR TIGHT.
5. VENT PIPE TO BE LAID ACCURATELY ON SLOPE, WITHOUT HIGH OR LOW POINTS.
6. PRECAST CONCRETE PADS SHALL NOT BE USED
7. CONCRETE PAD SHALL BE TYPE I CONCRETE W/ 3,000 P.S.I., 28 DAY COMPRESSIVE STRENGTH.
8. DETAIL DEPICTED ABOVE IS NOT DRAWN TO SCALE (N.T.S).
9. FORCE MAIN I.D. LARGER THAN 20" SHALL REQUIRE 3" VALVES, PIPES, FITTINGS, AND APPURTENANCES.

ABOVE GROUND AIR RELEASE VALVE DETAIL

N.T.S.

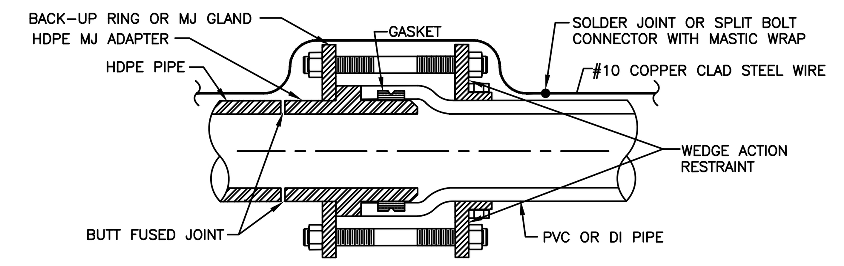

HDPE PIPE TO PVC PIPE / SPIGOT TO BELL CONNECTION

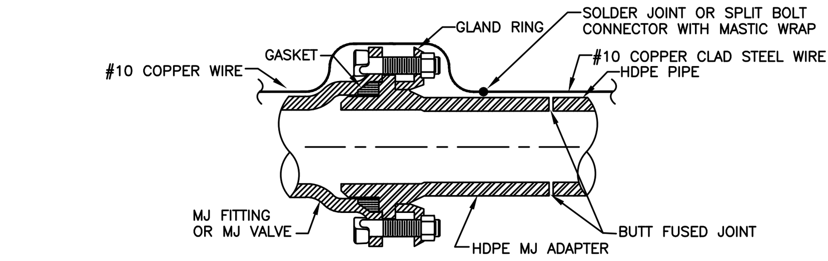

NOTE: SCHEMATIC SHOWN FOR STANDARD MJ FITTINGS AND GATE VALVES.

HDPE PIPE TO MJ FITTING TRANSITION

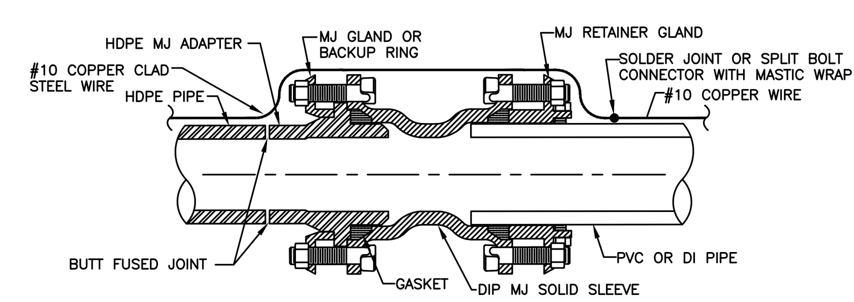

HDPE PIPE TO PVC PIPE SPIGOT TO SPIGOT CONNECTION

1. ONE # 10 GAUGE EXTRA HIGH STRENGTH COPPER CLAD STEEL TRACER WIRE SHALL BE PULLED AND SECURED TO THE PIPE FOR PIPELINES THAT ARE INSTALLED BY TRENCHLESS HORIZONTAL DIRECTIONAL DRILLING METHOD. IN NON-DIRECTIONAL BORE (TRENCHES AND BORE & JACK) APPLICATIONS, A # 10 GAUGE SOLID INSULATED COPPER WIRE SHALL BE ATTACHED TO THE PIPE. TRACER WIRES SHALL HAVE A MINIMUM 30-MILS OF POLYETHYLENE INSULATION.

HDPE TO PVC OR DI PIPE ADAPTER DETAIL

N.T.S.

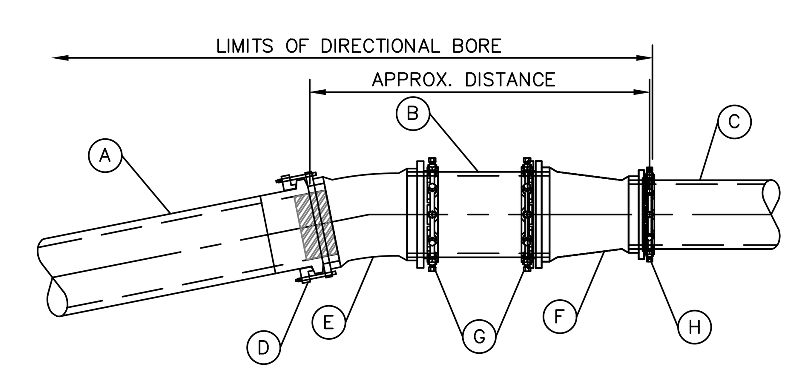

- (A) HDPE PIPE (NOMINAL SIZE NOTED IN TABLE BELOW)
- (B) 3 LF OF PVC PIPE (NOMINAL SIZE NOTED IN TABLE BELOW)
- (C) PVC PIPE (NOMINAL SIZE NOTED IN TABLE BELOW)
- (D) HDPE/DUCTILE IRON M.J. ADAPTER WITH GASKET SEAL AND STAINLESS STELL STIFFENER (NOMINAL SIZE NOTED IN TABLE BELOW)
- (E) 11.25° M.J. BEND (SIZE NOTED IN TABLE BELOW). REQUIRED FITTING SUBJECT TO CHANGE PER PLAN AND PROFILE SHEETS.
- (F) M.J. REDUCER (SIZE NOTED IN TABLE BELOW). REQUIRED FITTING SUBJECT TO CHANGE PER PLAN AND PROFILE SHEETS.
- (G) PVC PIPE/M.J. JOINT RESTRAINT (SIZE NOTED IN TABLE BELOW)
- (H) PVC PIPE/M.J. JOINT RESTRAINT (SIZE NOTED IN TABLE BELOW)

DIAMETER OF DRILL PIPE	(A)	(B)	(C)	(D)	(E)	(F)	(G)	(H)
6"	6"	6"	4"	6"	6"	6"x4"	6"	4"
8"	8"	8"	6"	8"	8"	8"x6"	8"	6"
10"	10"	10"	8"	10"	10"	10"x8"	10"	8"
12"	12"	12"	10"	12"	12"	12"x10"	12"	10"
16"	16"	16"	12"	16"	16"	16"x12"	16"	12"
18"	18"	18"	16"	18"	18"	18"x16"	18"	16"
20"	20"	20"	18"	20"	20"	20"x18"	20"	18"
24"	24"	24"	20"	24"	24"	24"x20"	24"	20"
30"	30"	30"	24"	30"	30"	30"x24"	30"	24"

HDPE TO PVC TRANSITION DETAIL

N.T.S.

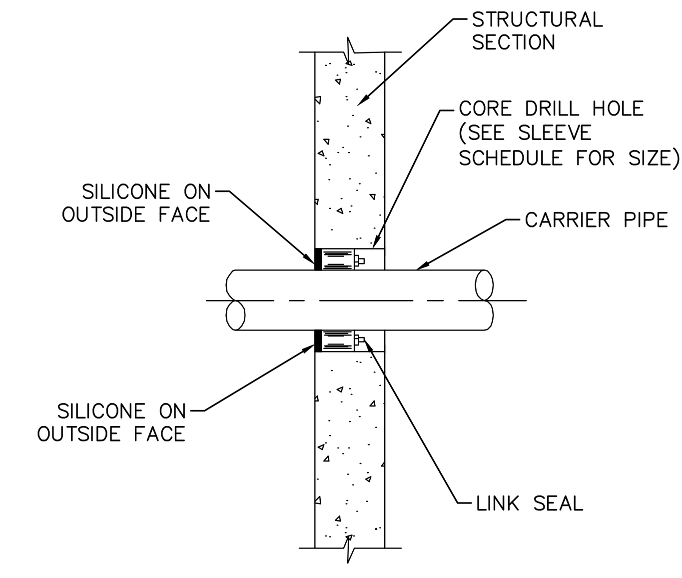

TYPE 1

SLEEVE SCHEDULE			
CARRIER PIPE			CORE DRILLED HOLE INSIDE DIAMETER (INCHES)
NOMINAL DIAMETER INCHES	MATERIAL	OUTSIDE DIAMETER INCHES	
6	D.I.	6.90	10
8	D.I.	9.05	12
10	D.I.	11.10	14
8	PVC C900-16	8.63	12
6	HDPE	6.90	10
8	HDPE	8.63	12

NOTE:
INSTALL SEALS FROM DRY SIDE OF PENETRATION. WET SIDE FILLED WITH WATERPROOF NON-SHRINK GROUT.

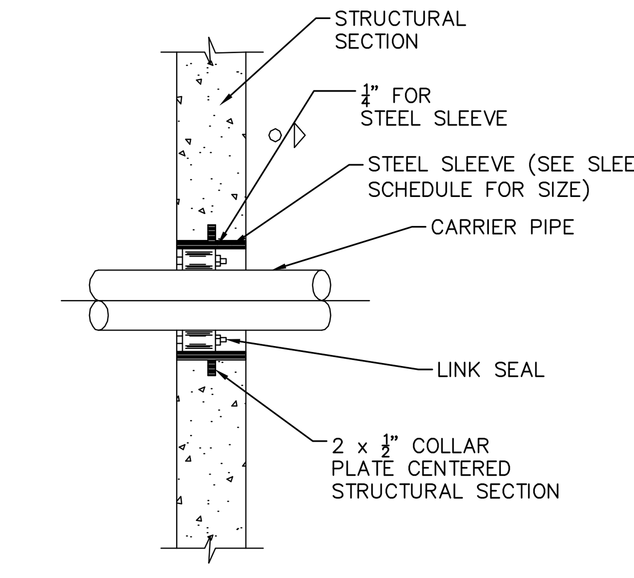

TYPE 2

PIPE PENETRATION

N.T.S.

THRUST BLOCK DIMENSIONS B ft. x d inches												
PIPE SIZE	90° BEND		45° BEND		22.5° BEND		11.25° BEND		DEAD END & TEE		WYE	
(IN.)	B	d	B	d	B	d	B	d	B	d	B	d
4	1.5	3 ½	1.1	3 ½	0.8	3 ½	0.6	3 ½	1.3	3 ½	1.1	3 ½
6	2.2	5 ¼	1.6	3 ¾	1.2	3 ½	0.8	3 ½	1.9	4 ½	1.6	3 ¾
8	2.9	7	2.1	5	1.5	3 ½	1.1	3 ½	2.4	5 ¾	2.0	4 ¾
10	3.5	8 ½	2.6	6 ¼	1.9	4 ½	1.3	3 ½	3.0	7 ¼	2.5	6
12	4.2	10	3.1	7 ½	2.2	5 ¼	1.6	3 ¾	3.5	8 ¼	3.0	7 ¼
14	4.9	11 ¾	3.6	8 ¾	2.6	6 ¼	1.8	4 ¼	4.1	9 ¾	3.4	8 ¼
16	5.5	13 ¼	4.1	9 ¾	2.9	7	2.1	5	4.7	11 ¼	3.9	9 ¼
18	6.2	15	4.6	11	3.3	8	2.3	5 ½	5.2	12 ½	4.4	10 ½
20	6.9	16 ½	5.0	12	3.6	8 ¾	2.6	6 ¼	5.8	14	4.9	11 ¾
24	8.2	19 ¾	6.0	14 ½	4.3	10 ¼	3.1	7 ½	6.9	16 ½	5.8	14
30	10.1	24 ¼	7.5	18	5.3	12 ¾	3.8	9	8.5	20 ½	7.2	17 ¼
36	12.1	29	8.9	21 ¼	6.4	15 ¼	4.5	10 ¾	10.2	24 ½	8.6	20 ¾

REINFORCEMENT MAT SCHEDULE
- FOR DIM. "B" BETWEEN 5.75' & 12.5' USE #4 @ 8" EACH WAY
- FOR DIM. "B" LESS THAN 5.75' USE #3 @ 8" EACH WAY

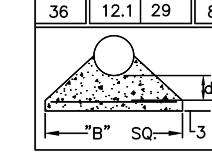

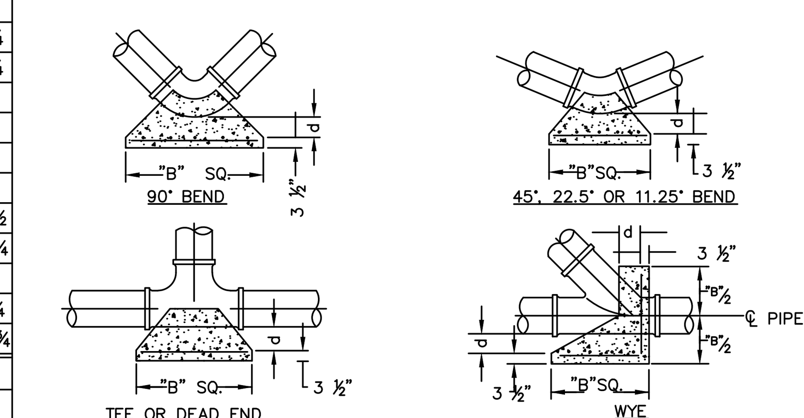

NOTES:

1. ALL THRUST BLOCKS SHALL BE CAST IN PLACE. FITTINGS ADJACENT TO THRUST BLOCKS SHALL BE WRAPPED IN POLYETHYLENE.
2. THIS TABLE IS BASED ON WATER PRESSURE=180 PSI WITH AN ALLOWABLE SOIL BEARING PRESSURE=2000 PSF, CONCRETE STRENGTH f_c =3000 PSI, REINFORCEMENT f_y =60.0 KSI. THRUST BLOCK SHALL BE CAST AGAINST FIRM UNDISTURBED SOIL.
3. FOR LARGER "B" DIMENSIONS IT IS NECESSARY TO CHECK THAT PIPE IS SUFFICIENTLY DEEP TO ALLOW 15" MIN. SOIL COVER OVER TOP EDGE OF THRUST BLOCK.
4. RESTRAINED JOINTS MAY BE USED IN LIEU OF THRUST BLOCKS TO SAVE SPACE. THRUST BLOCKS SHALL BE USED IN SITUATIONS WHERE THRUST BLOCKS AND RESTRAINED JOINTS ARE BOTH REQUIRED.

CONCRETE THRUST BLOCKS

N.T.S.

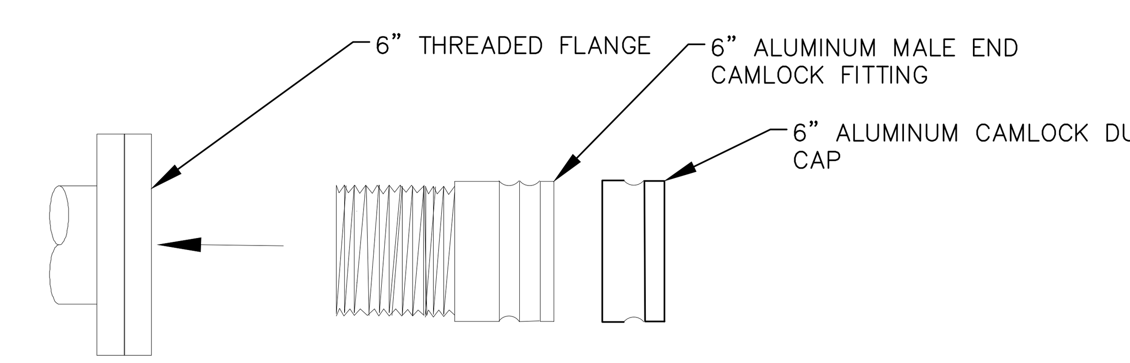

6" CAMLOCK CONNECTION DETAIL

N.T.S.

No.	Revisions	Date	By

Kimley»Horn

© 2023 KIMLEY-HORN AND ASSOCIATES, INC.
200 CENTRAL AVE., SUITE 600
ST. PETERSBURG, FL 33701
P: 727 547 3999
WWW.KIMLEY-HORN.COM REGISTRY NO. 35106

DESIGN ENGINEER:
SHELBY N. HUGHES, P.E.
FL LICENSE NUMBER
86419
DATE:

SCALE: AS NOTED
DESIGN: SNH
DRAWN: AJO
CHECKED: SAE

MECHANICAL DETAILS

CITY OF ST. PETE BEACH
PUMP STATION 1 REHABILITATION
PINELLAS COUNY FLORIDA

DATE: DECEMBER 2023

PROJECT NO. 148404075

SHEET NUMBER M-5

NOTES:
1. ALL MATERIALS SHALL BE IN ACCORDANCE WITH THE LATEST P.C.U. APPROVED MATERIAL SPECIFICATION MANUAL.
2. CORPORATION STOPS SHALL BE COMPATIBLE WITH DR 9 (C.T.S.) H.D.P.E. TUBING.
3. SERVICE SADDLE REQUIRED FOR ALL TAPS.
4. METER ONLY, TO BE FURNISHED BY P.C.U.
5. METER BOXES SHALL BE INDUSTRIAL SIZE.
6. ALL METER BOXES LOCATED WITHIN VEHICULAR TRAVEL AREAS SHALL BE H-20 LOADING. ALL OTHERS SHALL BE H-10 LOADING.
7. TRACER WIRE REQUIRED ON ALL SERVICES.
8. SERVICES OVER 60' IN LENGTH SHALL BE UP-SIZED TO 2".
9. TAP AND METER SHALL BE INSTALLED BY P.C.U. ON ALL PRIVATELY DEVELOPED PROJECTS.

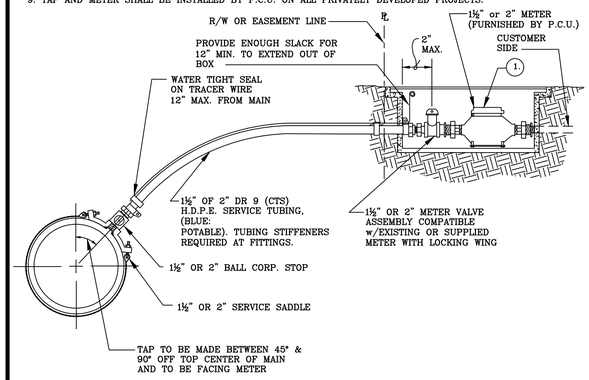

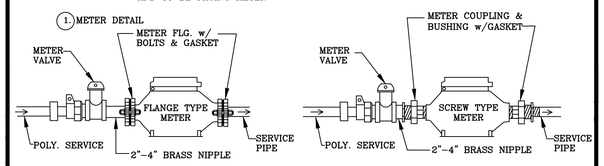

PINELLAS COUNTY 1½" OR 2" POTABLE WATER SERVICE CONNECTION DETAIL	DETAIL INDEX I.D.: PCU WD 4 DATE: FEB/2016 KEVIN BECOTTE, P.E. REVISION:

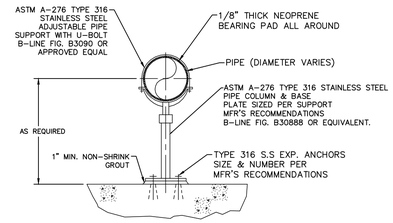

COLUMN PIPE SUPPORT
N.T.S. DATE: 07/10/2019

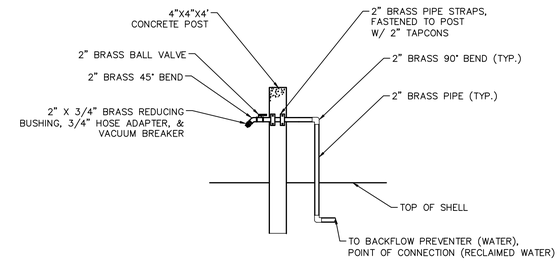

HOSE BIB DETAIL
N.T.S. DATE: 07/10/2019

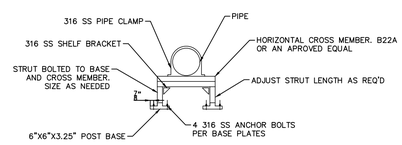

COLUMN PIPE SUPPORT
N.T.S. DATE: 07/10/2019

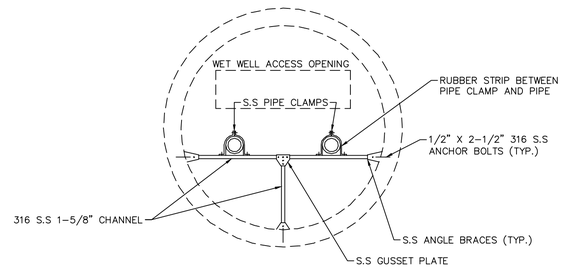

WET WELL PIPE BRACING
N.T.S. DATE: 07/10/2019

No.	Revisions	Date	By

Kimley»Horn
© 2023 KIMLEY-HORN AND ASSOCIATES, INC.
200 CENTRAL AVE. SUITE 600
ST. PETERSBURG, FL 33701
P: 727 547 3999
WWW.KIMLEY-HORN.COM REGISTRY NO. 35106

DESIGN ENGINEER: SHELBY N. HUGHES, P.E.
FL LICENSE NUMBER 86419
DATE:

SCALE: AS NOTED
DESIGN: SNH
DRAWN: AJO
CHECKED: SAE

MECHANICAL DETAILS

CITY OF ST. PETE BEACH
PUMP STATION 1 REHABILITATION
PINELLAS COUNY FLORIDA

DATE: DECEMBER 2023
PROJECT NO. 148404075
SHEET NUMBER M-6

GENERAL NOTES

1. THESE NOTES ARE NOT INTENDED TO REPLACE THE PROJECT SPECIFICATIONS OR CONSTRUCTION DRAWING NOTES & DETAILS. IN CASE OF CONFLICT BETWEEN THE REQUIREMENTS OF THE SPECIFICATIONS/CONSTRUCTION DRAWINGS AND THESE NOTES, THE MORE STRINGENT REQUIREMENT SHALL APPLY.
2. THE GOVERNING CODE FOR THIS PROJECT IS THE FLORIDA BUILDING CODE, SEVENTH EDITION (2020).
3. THE CONTRACT DOCUMENTS HAVE MADE NO INTENT TO GIVE SPECIFIC INSTRUCTIONS CONCERNINC THE MEANS, METHODS, TECHNIQUES, SEQUENCES, PROCEDURES AND ASSIGNMENT OF WORK.
4. THE CONTRACTOR SHALL BE SOLELY RESPONSIBLE FOR SUPERVISING AND DIRECTING THE WORK. TO THE BEST OF OUR KNOWLEDGE, THE DRAWINGS AND SPECIFICATIONS COMPLY WITH THE APPLICABLE REQUIREMENTS OF THE GOVERNING BUILDING CODE.
5. CONSTRUCTION SHALL COMPLY WITH REQUIREMENTS OF THE GOVERNING BUILDING CODE AND ALL OTHER APPLICABLE FEDERAL, STATE AND LOCAL CODES, STANDARDS, REGULATIONS AND LAWS.
6. THE STRUCTURAL DRAWINCS ARE TO BE USED IN CONJUNCTION WITH THOSE OF THE OTHER TRADES. IF A CONFLICT EXISTS, THE MORE STRINGENT REQUIREMENT SHALL APPLY.
7. CONTRACTOR SHALL VISIT ST. PETE BEACH (27.751721, -82.754176) AND BE FAMILIAR WITH THE PROPOSED WORK. TAKE FIELD MEASUREMENTS AND VERIFY ALL FIELD CONDITIONS, AND REPORT ANY DISCREPANCIES TO THE ENGINEER PRIOR TO CONSTRUCTION.
8. CONTRACTOR SHALL REVIEW ALL CONTRACT DOCUMENTS, DIMENSIONS AND SITE CONDITIONS AND COORDINATE WITH FIELD DIMENSIONS AND PROJECT SHOP DRAWINGS PRIOR TO CONSTRUCTION. THE CONTRACTOR SHALL VERIFY ALL DIMENSIONS GIVEN ON STRUCTURAL DRAWINGS RELATING TO GRID LINES, COLUMN AND WALL LOCATIONS, STRUCTURAL AND FINISHED FLOOR ELEVATIONS, MEMBER SIZES, ETC, WITH THE DRAWINGS OF OTHER TRADES BEFORE STARTING ANY WORK. REPORT ANY DISCREPANCIES VERBALLY AND IN WRITING IMMEDIATELY TO ENGINEER PRIOR TO PROCEEDING WITH WORK. WORK SHALL NOT COMMENCE UNTIL THE DISCREPANCIES ARE RESOLVED. DO NOT CHANGE SIZE OR DIMENSIONS OF STRUCTURAL MEMBERS WITHOUT WRITTEN INSTRUCTIONS FROM THE PROJECT ENGINEER OF RECORD.
9. DISCREPANCIES, OMISSIONS OR VARIATIONS NOTED ON THE DRAWINGS OR IN THE SPECIFICATIONS DISCOVERED DURING AND AFTER THE BIDDING PERIOD SHALL BE IMMEDIATELY COMMUNICATED IN WRITING TO THE ENGINEER.
10. CONTRACTOR SHALL PROTECT EXISTING FACILITIES, STRUCTURES AND UTILITY LINES FROM DAMAGE AND SHALL PROTECT HIS WORK, ADJACENT PROPERTY AND THE PUBLIC. CONTRACTOR IS SOLELY RESPONSIBLE FOR JOB SITE SAFETY, CONSTRUCTION PROCEDURES AND DAMAGE OR INJURY DUE TO HIS ACT OR NEGLECT.
11. CONTRACTOR SHALL SUITABLY DOCUMENT EXISTING CONDITIONS PRIOR TO COMMENCEMENT OF THE WORK, AND SHALL RESTORE ALL DAMAGED OR DISTURBED AREAS TO MEET OR EXCEED ORIGINAL SITE CONDITIONS TO THE OWNER'S SATISFACTION.
12. DO NOT REPRODUCE THE STRUCTURAL DRAWINGS FOR USE AS ERECTION, PLACING, FABRICATION OR SHOP DRAWINGS.
13. SCALING OF DRAWINGS SHALL NOT BE USED TO OBTAIN OR VERIFY ANY DIMENSION SHOWN ON THE DRAWINGS. THE CONTRACTOR SHALL REFER TO THE ENGINEER FOR INSTRUCTION FOR ANY DIMENSION NOT GIVEN ON DRAWINGS.
14. SEE DRAWINGS OF OTHER TRADES FOR SIZE AND LOCATION OF POSSIBLE ADDITIONAL OPENINGS IN STRUCTURES NOT SHOWN IN STRUCTURAL DRAWINGS.
15. DETAILS LABELED "TYPICAL DETAILS" ON THE DRAWINGS APPLY TO ALL SITUATIONS THAT ARE THE SAME OR SIMILAR TO THOSE SPECIFICALLY DETAILED. SUCH DETAILS APPLY WHETHER OR NOT THEY ARE KEYED IN AT EACH LOCATION. QUESTIONS REGARDING APPLICABILITY OF TYPICAL DETAILS SHALL BE RESOLVED BY THE ENGINEER.
16. CONTRACTOR SHALL PROVIDE 48 HOURS MINIMUM ADVANCE NOTICE TO ENGINEER FOR ALL REQUIRED FIELD REVIEWS.
17. CONTRACTOR SHALL COORDINATE WITH OWNER ALL ITEMS TO BE CONTRACTED, SUPPLIED OR INSTALLED BY OWNER.
18. CONTRACTOR IS RESPONSIBLE FOR ALL BUILDING, PERMIT, REVIEW, LICENSE AND DEVELOPMENT FEES REQUIRED TO COMPLETE THE PROJECT.
19. CONTRACTOR SHALL ASSEMBLE AND INSTALL MATERIALS AND PRODUCTS IN STRICT ACCORDANCE WITH THE MANUFACTURER'S INSTRUCTIONS AND WITH INDUSTRY/ASSOCI ATION STANDARDS.
20. MATERIALS OR WORK DESCRIBED IN WORDS WHICH HAVE A WELL- KNOWN TECHNICAL TRADE MEANING SHALL BE HELD TO REFER TO THE RECOGNIZED STANDARD. ALL MATERIALS SHALL BE NEW, U. O.N.
21. PROVIDE FIRE STOPPERS AND SEAL ALL PIPE AND CONDUIT PENETRATIONS THROUGH FIRE RATED FLOORS, WALLS AND CEILINGS IN ORDER TO PREVENT THE PASSAGE OF SMOKE OR FIRE. ALL SEALANTS AND RELATED PRODUCTS SHALL COMPLY WITH THE MINIMUM FIRE RATED REQUIREMENTS FOR THE FLOORS, WALLS AND CEILINGS. ONLY NON - COMBUSTIBLE MATERIALS SHALL BE USED AT PENETRATIONS.
22. MINOR DEVIATIONS FROM THE DESIGN LAYOUT ARE ANTICIPATED AND SHALL BE CONSIDERED AS PART OF THE WORK, HOWEVER, NO CHANGES THAT ALTER THE CHARACTER INTENT OF THE DESIGN WILL BE MADE WITHOUT A CHANGE ORDER..

UTILITES

1. CONTRACTOR SHALL LOCATE IN THE FIELD ALL UTILITIES OCCURRING WITHIN THE LIMITS OF EXCAVATION.
2. CONTRACTOR SHALL CALL SUNSHINE STATE ONE CALL OF FLORIDA, INC. (1—800—432—4770) AT LEAST 48 HOURS BEFORE COMMENCEMENT OF ANY EXCAVATION OPERATIONS ON SITE.
3. DATA CONCERNING TYPE AND LOCATION OF UNDERGROUND AND OTHER UTILITIES IS NOT GUARANTEED TO BE ACCURATE OR ALL-INCLUSIVE. THE CONTRACTOR IS RESPONSIBLE FOR MAKING HIS OWN DETERMINATIONS AS TO THE TYPE AND LOCATION OF UNDER GROUND AND OTHER UTILITIES AS MAY BE NECESSARY TO AVOID DAMAGE THERETO.

DOCUMENTS AND LIMITATIONS

1. THE DRAWINGS, CALCULATIONS, AND REPRODUCTIONS RELATING TO THE STRUCTURAL PART OF THE PROJECT ARE INSTRUMENTS OF SERVICE TO BE USED FOR THIS PROJECT ONLY.
2. IT IS UNDERSTOOD THAT THE ENGINEER MAKES NO WARRANTY, EITHER EXPRESSED OR IMPLIED, AS TO THE FINDINGS, DESIGNS, RECOMMENDATIONS, SPECIFICATIONS, OR PROFESSIONAL ADVICE EXCEPT THAT THESE INSTRUMENTS OF SERVICE HAVE BEEN PREPARED IN ACCORDANCE WITH CURRENT GENERALLY ACCEPTED PROFESSIONAL ENGINEERING PRACTICES.

SHOP DRAWINGS AND OTHER SUBMITTALS

1. REVIEW OF SUBMITTALS BY THE ENGINEER IS FOR GENERAL CONFORMANCE WITH THE DESIGN CONCEPT AS PRESENTED BY THE CONTRACT DOCUMENTS. NO DETAILED CHECK OF QUANTITIES OR DIMENSIONS WILL BE MADE. ONLY THOSE SUBMITTALS REQUIRED TO BE SUBMITTED WILL BE REVIEWED. ALL OTHERS WILL BE RETURNED WITHOUT REVIEW.
2. ALL SUBMITTALS HALL BE ACCOMPANIED BY A LETTER OF TRANSMITTAL. CONTRACTOR'S SUBMITTAL NUMBER SHALL BE INDICATED ON TRANSMITTAL. DO NOT COMBINE DIFFERENT SUBMITTALS ON THE SAME TRANSMITTAL. SUBMIT SHOP DRAWINGS IN A TIMELY MANNER, CONSISTENT WITH THE ABOVE, AND PRIOR TO FABRICATION, INSTALLATION OR COMMENCEMENT OF THE WORK. ALLOW UP TO 10 WORKING DAYS FOR ENGINEER TO REVIEW AND RETURN SHOP DRAWINGS. NUMBER OF COPIES OF EACH SUBMITTED SHOP DRAWING SHALL BE SUFFICIENT FOR ENGINEER TO RETAIN 2 COPIES.
3. ALL SUBMITTALS MUST BEAR EVIDENCE OF CONTRACTOR'S REVIEW (INCLUDIMG COMPANY STAMP AND DATED SIGNATURE OF REVIEWER) AND MUST BE APPROVED OR APPROVED AS NOTED BY HIM PRIOR TO SUBMITTING TO THE ENGINEER.
4. ALL CHANGES AND ADDITIONS MADE ON RESUBMITTALS MUST BE CLEARLY FLAGGED AND NOTED. THE PURPOSE OF THE RESUBMITTALS MUST BE CLEARLY NOTED ON THE LETTER OF TRANSMITTAL. ENGINEER REVIEW WILL BE LIMITED TO THOSE ITEMS CAUSING THE RESUBMITTAL.
5. DO NOT REPRODUCE THE STRUCTURAL DRAWINGS FOR USE AS ERECTION, PLACING OR FABRICATION DRAWINGS.
6. SUBMITTALS NOT MEETING THE ABOVE CRITERIA OR SUBMITTED AFTER FABRICATION WILL NOT BE REVIEWED.
7. SUBMITTALS:
   AS A MINIMUM, THE FOLLOWING SHALL BE SUBMITTED, AS APPLICABLE, TO THE ENGINEER FOR REVIEW AND COMPLIANCE WITH THE INTENT OF THE CONTRACT DOCUMENTS PRIOR TO FABRICATION, INSTALLATION, OR COMMENCEMENT OF THE WORK:
   A. CONCRETE, MORTAR AND GROUT MIX DESIGNS, INCLUDING ADMIXTURE DATA SHEETS.
   B. BILL OF REINFORCING AND LAYOUT.
   C. MISCELLANEOUS METAL FABRICATIONS.
   D. HANDRAIL, GUARDRAIL AND LADDER DETAILS, INCLUDING SUPPORT MEMBERS CONNECTIONS, AND CALCULATIONS
8. WELDER CERTIFICATIONS FOR ALL WELDERS SHALL BE SUBMITTED. CERTIFICATIONS MUST HAVE BEEN ISSUED WITHIN 3 YEARS PRIOR TO PERFORMING WORK ON THE PROJECT.
9. REQUESTS FOR SUBSTITUTIONS SHALL BE SUBMITTED IN WRITING TO THE ENGINEER FOR REVIEW. SUBMIT 3 COPIES OF ALL PRODUCT DATA AND CUT SHEETS AS NECESSARY TO SHOW COMPLIANCE WITH THE PROJECT REQUIREMENTS. CONTRACTOR SHALL BEAR THE BURDEN OF OBTAINING AUTHORIZATION FOR USE OF ITEMS TO BE SUBSTITUTED. ENGINEER'S DECISION REGARDING SUBSTITUTION SHALL BE FINAL.
10. FOR ADDITIONAL CRITERIA APPLICABLE TO SUBMITTALS REQUIRING ENGINEERING INPUT BY A DELEGATED ENCINEER, SEE BELOW.

DESIGN LOADS

1. SEE INDIVIDUAL PLAN SHEETS FOR DESIGN CRITERIA APPLICABLE TO SPECIFIC SITE COMPONENTS.
2. LOADS SHALL MEET THE MINIMUM DESIGN REQUIREMENTS SET FORTH IN THE FLORIDA BUILDING CODE, SEVENTH EDITION (2020), UNLESS A MORE STRINGENT REQUIREMENT IS INDICATED.
3. FILL HEIGHTS AS SHOWN ON THE PLANS.
4. SEE THIS SHEET FOR SPECIFIC DESIGN LOADS.
5. IT IS THE CONTRACTOR'S RESPONSIBILITY TO PROVIDE FOR SUPPORTING OF CONSTRUCTION LOADS THAT EXCEED THE ABOVE LOADINGS.

FOUNDATIONS/SLAB ON GRADE

1. A REPORT OF GEOTECHNICAL EXPLORATION HAS BEEN PREPARED FOR THIS PROJECT BY AREHNA ENGINEERING, INC., PROJECT NO. B-20-138.01, DATED APRIL 6, 2023.
2. FOUNDATION CONSTRUCTION, SITE PREPARATION AND SOIL PREPARATION BELOW FOUNDATION SHALL BE PERFORMED IN ACCORDANCE WITH REPORT OF GEOTECHNICAL EXPLORATION (APRIL 6,2023).
3. FOUNDATIONS SHALL BE SUPPORTED ON COMPACTED MATERIAL WITH A MINIMUM GROSS SOIL BEARING CAPACITY OF 2000 PSF, U.O.N. THE MODULUS OF VERTICAL SUBGRADE REACTION (K) FOR THE SLAB BEARING SOILS IS EXPECTED TO BE ON THE ORDER OF 100 PSI PER INCH OF VERTICAL DEFLECTION (PCI).
4. THE CONTRACTOR SHALL NOTIFY THE ENGINEER IMMEDIATELY OF ANY EXISTING FOUNDATION CONDITIONS OR DETAILS THAT ARE IN CONFLICT WITH THOSE INDICATED AND SHOWN ON THE DRAWINGS.
5. THE CONTRACTOR SHALL BE RESPONSIBLE FOR THE PROTECTION, SHORING, UNDERPINNING, AND ISOLATION, ETC. OF ALL EXISTING FOUNDATION CONDITIONS AS REQUIRED TO PREVENT ANY DISTURBANCE TO EXISTING FOUNDATION CONDITIONS AS A RESULT OF THE WORK.
6. ANCHOR BOLTS SIDE SLEEVES AND OTHER EMBEDDED ITEMS ARE TO BE PLACED IN ACCORDANCE WITH THE CONTRACT DOCUMENTS.
7. TO HELP CONTROL SHRINKAGE CRACKS, AT SLAB ON GRADE PENETRATIONS COMPRISED OF BOX— OUTS AND CLOSELY SPACED OR BUNDLED CONDUITS, PIPES, ETC., PROVIDE DIAGONAL #4 BARS ABOUT PERIMETER OF PENETRATION AREA IN ADDITION TO TYPICAL SLAB REINFORCEMENT. ORIENT BARS NORMAL TO ANTICIPATED PATH OF CRACK FORMATION. BAR ENDS SHALL EXTEND 12 INCHES MINIMUM BEYOND OVERLAPS WITH ADJACENT BARS. PROVIDE 2 INCH CLEAR COVER TO TOP SURFACE OF SLAB.
8. CHAIR WELDED WIRE FABRIC (WWF) AND REINFORCING BARS DURING CONCRETE PLACEMENT TO ENSURE PROPER POSITION IN SLAB. CHAIRS SHALL BE OF NON-CORROSIVE MATERIAL INCLUDING, BUT NOT LIMITED TO, FIBER GLASS, PLASTIC, AND CONCRETE BLOCK.
9. ALL SOIL BENEATH BUILDING FLOOR SLABS AND FOUNDATIONS SHALL BE TREATED FOR SUBTERRANEAN TERMITE PREVENTION BY A LICENSED PEST CONTROL COMPANY. THE PEST CONTROL COMPANY SHALL PROVIDE A CERTIFICATE OF COMPLIANCE TO THE CONTRACTOR FOR SUBMITTAL TO THE OWNER AND LOCAL BUILDING DEPARTMENT IF REQUIRED. TREATMENT SHALL PRECEDE CONCRETE POUR BY NO MORE THAN 72 HOURS.
10. FLOOR AND FOUNDATION SLAB SHALL BE WET CURED FOR A MINIMUM OF 7 DAYS PRIOR TO FURTHER CONSTRUCTION.
11. CRACK CONTROL JOINTS SHALL BE SAWCUT IN ACCORDANCE WITH ACI 301 AND ACI 302. COMPLETE SAWCUTTING WITHIN 12 HOURS AFTER CONCRETE PLACEMENT.
12. UNLESS OTHERWISE NOTED, PLACE CRACK CONTROL JOINTS AT 20 FEET MAX. SPACING SO AS TO LIMIT SURFACE AREA BETWEEN JOINTS TO 400 SQ. FT., AND SUCH THAT THE LENGTH — TO— WIDTH RATIO IS LESS THAN 1.5.
13. PLACE CRACK CONTROL JOINTS AT 10 FEET MAX. SPACING FOR SIDEWALKS AND/OR WALKWAYS, SUCH THAT THE LENGTH — TO— WIDTH RATIO IS LESS THAN 1.5.
14. SEE 'REINFORCED CONCRETE" NOTES FOR ADDITIONAL INFORMATION PERTAINING TO CONCRETE AND REINFORCEMENT.

DESIGN:
FLORIDA BUILDING CODE, SEVENTH EDITION (2020)

WIND LOADS - PER ASCE 7-16:

WIND SPEED (ULTIMATE)	155 MPH
RISK CATEGORY	III
EXPOSURE	D

DEAD LOAD:

EMPTY WEIGHT OF CATERPILLAR C18 700 KW	31,800 LBS

LIVE LOAD:

GRATING AND CATWALK	100 PSF
STAIRS	100 PSF
PLATFORM LIVE LOADS	125 PSF
FUEL OF CAPTERPILLAR C18 700 KW	46,500 LBS.

FLOOD LOAD:

FEMA FIRM MAP	12103C0194H

ZONE AE 11
BASE FLOOD ELEVATION = 11FT NAVD 88
DESIGN STILLWATER FLOOD EL. = 9.05'

DEFLECTION LIMIT FOR GRATING AND WALKWAYS = 0.25"

SUBMITTALS REQUIRING ENGINEERING INPUT BY DELEGATED (SPECIALTY) ENGINEER

1. DELEGATED ENGINEER:
   A. DEFINITION — A FLORIDA PROFESSIONAL ENGINEER WHO UNDERTAKES A SPECIALTY SERVICE AND PROVIDES SERVICES OR CREATIVE WORK (DELEGATED ENCINEERING DOCUMENT) REGARDING A PORTION OF THE ENGINEERING PROJECT. THE DELEGATED ENGINEER IS THE ENGINEER OF RECORD FOR THAT PORTION OF THE ENGINEERING PROJECT.
   B. SHALL BE: (1) AN INDEPENDENT CONSULTANT, (2) AN EMPLOYEE OR OFFICER OF AN ENTITY SUPPLYING COMPONENTS TO A FABRICATOR OR CONTRACTOR, SO LONG AS THE ENGINEER ACTS AS AN INDEPENDENT CONSULTANT OR THROUGH A DULY QUALIFIED ENGINEERING CORPORATION, OR (3) AN EMPLOYEE OR OFFICER OF A FABRICATOR OR CONTRACTOR, SO LONG AS THE ENGINEER ACTS AS AN INDEPENDENT CONSULTANT OR THROUCH A DULY QUALIFIED ENCINEERIN C CORPORATION.
2. SUBMITTALS FOR CUSTOM DESIGNED, MANUFACTURED OR FABRICATED LOAD— CARRYING ITEMS AND CUSTOM FABRICATED ITEMS WHICH ARE REQUIRED BY CODES OR STANDARDS TO RESIST FORCES AND STRESSES, INCLUDING THEIR CONNECTIONS, ANCHORAGES AND ATTACHMENTS REQUIRE A DELEGATED ENGINEER.
3. AS A MINIMUM, THE FOLLOWING SYSTEMS AND COMPONENTS REQUIRE FABRICATION AND ERECTION DRAWINGS WITH INPUT BY A DELEGATED ENGINEER:
   A. REDESIGN OF ANY STRUCTURAL ELEMENTS OR CONNECTIONS.
   B. TEMPORARY SHORING.
   C. HANDRAILS, GUARDRAILS, CATWALK /WALKWAYS, LADDERS AND STAIRS.
4. FOR EACH CATEGORY OF SUBMITTALS REQUIRING INPUT FROM A DELEGATED ENGINEER, THE CONTRACTOR SHALL ATTACH TO THE FIRST SUBMITTAL A SIGNED AND SEALED LETTER FROM THE RESPONSIBLE DELEGATED ENGINEER STATING "I CERTIFY THAT THE DESIGN AND DRAFTING OF THE SHOP DRAWINGS WHICH ARE SIGNED AND SEALED BY ME WERE PREPARED UNDER MY DIRECT SUPERVISION AND CONTROL, AND TO THE BEST OF MY KNOWLED BE, THE SHOP DRAWINGS COMPLY WITH THE APPLICABLE MINIMUM BUILDING CODES AND THE CONTRACT DOCUMENTS."
5. SUBMITTALS SHALL CLEARLY IDENTIFY THE SPECIFIC PROJECT AND APPLICABLE CODES, LIST THE DESIGN CRITERIA, AND SHOW ALL DETAILS AND PLANS NECESSARY FOR PROPER FABRICATION AND INSTALLATION. CALCULATIONS AND SHOP DRAWINGS SHALL IDENTIFY SPECIFIC PRODUCTS UTILIZED. GENERIC PRODUCTS WILL NOT BE ACCEPTED.
6. SHOP DRAWINGS AND CALCULATIONS REQUIRE THE SEAL, DATE AND SIGNATURE OF THE DELEGATED ENGINEER. COMPUTER PRINTOUTS ARE AN ACCEPTABLE SUBSTITUTE FOR MANUAL COMPUTATIONS PROVIDED THEY ARE ACCOMPANIED BY SUFFICIENT DESCRIPTIVE INFORMATION TO PERMIT THEIR PROPER EVALUATION. SUCH DESCRIPTIVE INFORMATION SHALL BEAR THE IMPRESSED SEAL AND SIGNATURE OF THE DELEGATED ENGINEER AS AN INDICATION THAT HE HAS ACCEPTED RESPONSIBILITY FOR THE RESULTS. IF ACCOMPANYING SIGNED AND SEALED BLUELINE PRINTS ARE PROVIDED, SEPIAS DO NOT REQUIRE SIGNATURE AND SEAL. THE ENGINEER WILL RETAIN 2 SIGNED AND SEALED BLUELINE PRINTS FOR HIS RECORDS.
7. CALCULATIONS ARE THE SOLE RESPONSIBILITY OF THE DELEGATED ENGINEER. CALCULATIONS ARE SUBMITTED TO THE ENGINEER FOR HIS RECORDS.
8. CATALOG INFORMATION ON STANDARD PRODUCTS (i. e. °"CUT SHEETS") DOES NOT REQUIRE THE SEAL OF A DELEGATED ENGINEER.
9. REVIEW BY THE PROJECT ENGINEER OF RECORD OF SUBMITTALS IS LIMITED TO VERIFYING THE FOLLOWING:
   A. THAT THE SPECIFIED STRUCTURAL SUBMITTALS HAVE BEEN FURNISHED.
   B. THAT THE STRUCTURAL SUBMITTALS HAVE BEEN SIGNED AND SEALED BY THE DELEGATED ENGINEER.
   C. THAT THE DELEGATED ENGINEER HAS UNDERSTOOD THE DESIGN INTENT AND HAS USED THE SPECIFIED STRUCTURAL CRITERIA. (NO DETAILED CHECK OF CALCULATIONS WILL BE MADE.)
   D. THAT THE CONFIGURATION SET FORTH IN THE STRUCTURAL SUBMITTALS IS CONSISTENT WITH THE CONTRACT DOCUMENTS. (N 0 DETAILED CHECK OF DIMENSION S OR QUANTITIES WILL BE MADE.)
10. SUBMITTALS NOT MEETING THE ABOVE CRITERIA, OR SUBMITTED AFTER FABRICATION, WILL NOT BE REVIEWED.

No.	Revisions	Date	By

Kimley»Horn
© 2022 KIMLEY-HORN AND ASSOCIATES, INC.
100 2ND AVENUE SOUTH, SUITE 105N
ST. PETERSBURG, FL 33701
P: 727 547 3999
WWW.KIMLEY-HORN.COM REGISTRY NO. 35106

DESIGN ENGINEER:
SETH E. SCHMID, P.E.
FL LISCENSE NUMBER 54640
DATE:

SCALE:
DESIGN: LH
DRAWN: JQ
CHECKED: SM

GENERAL NOTES

CITY OF ST. PETE BEACH
PUMP STATION 1 REHABILITATION
PINELLAS COUNY FLORIDA

DATE: DECEMBER 2023
PROJECT NO. 148404075
SHEET NUMBER S-0.1

BIM 360://148404075 Pump Station 1 Rehab/148404075_Pump Station 1 Rehab_STRUC-R20.rvt

WELDED WIRE FABRIC (WWF)

1. WWF SHALL BE IN ACCORDANCE WITH ASTM A185, PLAIN (SMOOTH) TYPE, IN FLAT SHEETS.
2. ALL WWF SHALL BE ACCURATELY PLACED, RIGIDLY SUPPORTED AND FIRMLY TIED IN PLACE WITH BAR SUPPORTS AND SPACERS. DO NOT PLACE WWF ON GRADE AND SUBSEQUENTLY RAISE INTO POSITION DURING CONCRETE PLACEMENT.
3. FOR SLABS ON GRADE, EXTEND WWF TO WITHIN 2 INCHES OF THE CONCRETE EDGE.
4. LAP EDGES AND ENDS OF WWF SHEETS A MINIMUM OF ONE MESH SPACING PLUS 2 INCHES.
5. LOCATE WWF 2 INCHES BELOW THE TOP SURFACE OF THE SLAB.
6. SEE "SLABS ON GRADE" NOTES ABOVE FOR ADDITIONAL REINFORCEMENT REQUIRED AT SLAB PENTRATIONS.

FORM WORK AND SHORING

1. PROVIDE, AS A PACKAGE, SHORING DRAWINGS PREPARED BY OR UNDER THE DIRECT SUPERVISION OF A DELEGATED ENGINEER.
2. FORMS SHALL CONFORM TO THE SHAPE, LINES AND DIMENSIONS OF THE MEMBERS AS CALLED FOR IN THE PLANS, AND SHALL BE SUBSTANTIAL AND SUFFICIENTLY TIGHT TO PREVENT LEAKAGE OF MORTAR. THEY SHALL BE PROPERLY BRACED OR TIED TOGETHER SO AS TO MAINTAIN POSITION AND SHAPE.
3. DESIGN FORMS AND SHORES FOR HORIZONTAL CONCRETE MEMBERS FOR ALL IMPOSED DEAD AND LIVE LOADS, BUT NOT LESS THAN DEAD LOAD (INCLUDING FILL HEIGHTS IF APPLICABLE) PLUS AASHTO HS20— 44 TRUCK CONSTRUCTION LIVE LOAD, WHERE APPLICABLE. DESIGN WOOD SHORES WITH A SAFETY FACTOR OF 3, AND METAL SHORES WITH A SAFETY FACTOR OF 2.
4. REMOVAL OF FORMWORK IS THE SOLE RESPONSIBILITY OF THE CONTRACTOR, HOWEVER FORMS SHALL NOT BE REMOVED LESS THAN 24 HOURS AFTER CONCRETE PLACEMENT. REMOVE FORMS IN SUCH A MANNER AS TO INSURE JOB SAFETY AND TO PREVENT DAMAGE TO AND CREEP DEFLECTION OF THE STRUCTURE.
5. THE SHORING IS TO BE INSPECTED BY THE DELEGATED ENGINEER OR HIS AUTHORIZED REPRESENTATIVE. PRIOR TO EACH CONCRETE POUR, HE SHALL SUBMIT A WRITTEN INSPECTION REPORT TO THE SPECIAL INSPECTOR AND CONTRACTOR STATING THAT THE WORK IS IN GENERAL COMPLIANCE WITH THE SHORING DRAWINGS. THE FIELD REPORTS SHALL BE SIGNED BY THE INDIVIDUAL CONDUCTING THE INSPECTION. COPIES OF THE FIELD REPORTS SHALL BE SUBMITTED EVERY WEEK TO THE ENGINEER, SPECIAL INSPECTOR AND BUILDING OFFICIAL UNDER A COVER LETTER SIGNED, SEALED AND DATED BY THE DELEGATED ENGINEER.
6. THE SHORING REPORT SHALL CONTAIN, AS A MINIMUM, THE FOLLOWING:
   - A. NAME AND LOCATION OF PROJECT, NAME OF DELEGATED ENGINEER AND FIELD REPRESENTATIVE, PERMIT NUMBER, DATE, TIME OF DAY, WORKING CONDITIONS (INCLUDING WEATHER AND TEMPERATURE).
   - B. ITEMS REQUIRING CORRECTIONS.
   - C. ACCEPTED DEVIATIONS FROM SHORING DRAWINGS.
   - D. AREAS ACCEPTED AND RELEASED FOR CONCRETE POURS.
7. AS SOON AS FORMS ARE REMOVED, ALL IRREGULAR PROJECTIONS SHALL BE CHIPPED OFF FLUSH WITH THE CONCRETE SURFACES. ALL VOIDS OR HONEYCOMBING SHALL BE POINTED UP WITH GROUT AND TROWELED FLUSH WITH THE CONCRETE SURFACE. ALL FORM TIES SHALL BE REMOVED TO A DEPTH OF 1—1/2 INCHES MINIMUM AND GROUTED FLUSH WITH THE CONCRETE SURFACE.

CLEAN —UP

1. THE CONTRACTOR SHALL AT ALL TIMES KEEP THE SITE FREE FROM ACCUMULATION OF WASTE MATERIALS OR RUBBISH CAUSED BY HIS EMPLOYEES.
2. CONTRACTOR SHALL VISUALLY INSPECT INTERIOR AND EXTERIOR SURFACES AND REMOVE ALL TRACES OF SOIL, WASTE MATERIALS, SMUDGES, STAINS, SPLASHED MATERIAL, PAINT DROPPINGS AND OTHER FOREIGN MATTER PRIOR TO COMPLETION OF THE WORK.

RECORD DRAWINGS

1. CONTRACTOR SHALL PREPARE AND MAINTAIN CURRENT A SET OF REDLINED DRAWINGS SHOWNG ALL DEVIATIONS AND CHANGES MADE TO THE CONSTRUCTION DRAWINGS
2. DRAWINGS SHALL BE MADE AVAILABLE TO THE ENGINEER FOR REVIEW UPON REQUEST AT ANY TIME DURING THE COURSE OF THE PROJECT.
3. CONTRACTOR SHALL SUBMIT THE ORIGINAL DRAWINGS TO THE ENGINEER WITHIN ONE WEEK FROM THE DATE OF FINAL COMPLETION, AND PRIOR TO OWNER'S ACCEPTANCE OF CONTRACTOR'S FINAL IN VOICE.
4. SUBMITTED DRAWINGS WILL REMAIN THE PROPERTY OF THE ENGINEER.

BID ITEMS

1. PAYMENT FOR ALL INCIDENTALS IS TO BE INCLUDED IN THE PRICE BID FOR CONTRACT ITEMS.
2. COST FOR REMOVAL AND DISPOSAL OF VARIOUS MATERIALS, WHERE REQUIRED, SHALL BE INCLUDED IN THE PRICE BID FOR CONTRACT ITEMS.

ALUMINUM

1. ALUMINUM FABRICATION SHALL BE IN CONFORMANCE WITH THE ALUMINUM ASSOCIATION, INC. "SPECIFICATIONS FOR ALUMINUM STRUCTURES" (LATEST EDITION).
2. UNLESS NOTED OTHERWISE, MATERIALS SHALL BE:
   - A. PLATE & SHEET — ASTM B 209; 6061— T6, 6061— T651 ALLOY.
   - B. EXTRUDED SHAPES — ASTM B221; 6061— T6, 6061— T651 ALLOY. PIPE SECTIONS ARE SCHEDULE 40 U.N.0..
   - C. CASTINGS — ASTM B108; 214 ALLOY.
3. ALUMINUM SHALL BE SEPARATED FROM DIRECT CONTACT WITH OTHER MATERIALS (STEEL, CONCRETE, ETC.) BY PRESSURE SENSITIVE TAPE, BITUMASTIC COATING, OR OTHER PROTECTIVE METHOD SUBMITTED BY THE CONTRACTOR AND APPROVED BY THE OWNER'S CONSTRUCTION REPRESENTATIVE.
4. WELDING ALUMINUM SHALL CONFORM TO AWS D1.2 & AWS A5.10 AND THE REQUIREMENTS OF THE ALUMINUM ASSOCIATIONS "ALUMINUM DESIGN MANUAL" (LATEST EDITION) TABLE 7.1—1 FOR WELD FILLERS FOR WROUGHT ALLOYS.
5. REFERENCE PROJECT SPECIFICATIONS FOR HANDRAIL & GUARDRAIL REQUIREMENTS.
6. FASTENERS: UNLESS NOTED OTHERWISE, ALL FASTENERS SHALL BE TYPE 316 STAINLESS STEEL MEETING THE REQUIREMENTS OF ASTM F593 OR ASTM A193 FOR BOLTS AND ASTM F594 OR ASTM A194 FOR NUTS.

REINFORCING STEEL

1. REINFORCING STEEL SHALL BE OF DOMESTIC MANUFACTURE AND IN ACCORDANCE WITH ASTM A615 WITH SUPPLEMENT, GRADE 60; MINIMUM WORKING STRESS OF 24, 000 PSI.
2. TOLERANCES FOR REINFORCING BAR FABRICATION SHALL CONFORM TO THE CURRENT CRSI MANUAL OF STANDARD PRACTICE.
3. ALL REINFORCING STEEL SHALL BE UNCOATED (BLACK) DEFORMED BARS AND SHALL BE FREE FROM LOOSE RUST, SCALE OR OTHER COATINGS.
4. ALL REINFORCING STEEL SHALL BE ACCURATELY PLACED, RIGIDLY SUPPORTED AND FIRMLY TIED IN PLACE WITH BAR SUPPORTS AND SPACERS. VERIFY THAT PLACEMENT OF REINFORCING STEEL WILL NOT CONFLICT WITH SUBSEQUENT INSTALLATION OF ANCHOR BOLTS, FASTENERS OR FIELD — DRILLED COMPONENTS.
5. UNLESS OTHERWISE NOTED, LAP BOTTOM STEEL OVER STRUCTURAL SUPPORTS AND TOP STEEL AT MIDSPAN.
6. ALL LAP LENGTHS SHALL BE IN ACCORDANCE WITH ACI 318 AND CRSI STANDARD PRACTICES LATEST EDITIONS, U.O.N.
7. HOOK DISCONTINUOUS ENDS OF ALL TOP BARS AND ALL BARS IN WALLS U.O.N.
8. ACI STANDARD HOOKS SHALL BE USED AS A MINIMUM, U. O.N.
9. ALL DIMENSIONS PERTAINING TO LOCATION OF REINFORCING BARS ARE TO CENTERLINE OF BARS EXCEPT WHERE THE CLEAR DIMENSION IS SHOWN TO FACE OF CONCRETE.
10. SUBMIT SHOP DRAWINGS TO ENGINEER FOR REVIEW PRIOR TO FABRICATING REINFORCING STEEL. DO NOT REPRODUCE THE STRUCTURAL DRAWINGS FOR USE AS PLACING DRAWINGS OR SHOP DRAWINGS.
11. PROVIDE CONSTRUCTION JOINTS IN ACCORDANCE WITH ACI 318 AND SUBMIT DRAWINGS SHOWING LOCATIONS AND DIRECTION OF POUR FOR ENGINEER'S REVIEW. PROVIDE KEYWAYS, WATERSTOPS AND ADEQUATE DOWELS AT ALL CONSTRUCTION JOINTS IN ACCORDANCE WITH THE STRUCTURAL DRAWINGS.
12. PROVIDE REINFORCING STEEL ERECTOR WITH A SET OF STRUCTURAL DRAWINGS FOR FIELD USE. INSPECT REINFORCING STEEL PLACEMENT FROM SHOP DRAWINGS.

REINFORCED CONCRETE

1. ALL CONCRETE MATERIALS, PLACING AND HANDLING SHALL BE IN ACCORDANCE WITH AMERICAN CONCRETE INSTITUTE PUBLICATIONS ACI 301, ACI 318 - LATEST EDITIONS.
2. CURING OF CONCRETE SHALL BE IN STRICT ACCORDANCE WITH ACI 301 PROVISIONS.
3. ALL STRUCTURAL CONCRETE SHALL HAVE A MINIMUM 28-DAY COMPRESSIVE STRENTH OF OF 4000 PSI (MAX. W/CM=0.40).
4. USE NORMAL WEIGHT CONCRETE (135 PCF MIN.) FOR ALL STRUCTURAL MEMBERS. DO NOT USE CALCIUM CHLORIDE IN ANY CONCRETE.
5. PROVIDE A 4 INCH SLUMP WITH A TOLERANCE OF + /- 1 INCH. FOR WALLS 8 INCHES OR LESS IN THICKNESS, PROVIDE 5 INCH SLUMP WITH A TOLERANCE OF + 1/2 INCH AND -1 INCH.
6. IF CONCRETE IS PUMPED, SLUMP MAY BE INCREASED TO 6 INCHES AT THE TRUCK, PROVIDED THE SLUMP SPECIFIED ABOVE IS MAINTAINED AT THE DISCHARGE END. USE A MINIMUM 4 INCH PUMP. FOR PUMPED CONCRETE, TAKE CONCRETE SAMPLES FOR SLUMP TEST AT END OF TRUCK CHUTE AND AT DISCHARGE END OF HOSE, AND TAKE SAMPLES FOR CYLINDER TESTING AT DISCHARGE END OF HOSE.
7. WATER SHALL NOT BE ADDED TO CONCRETE AT THE JOBSITE UNLESS SPECIFIC AUTHORIZATION IS INDICATED ON THE DELIVERY TICKET. NOTIFY ENGINEER OF TOTAL QUANTITY OF WATER ADDED TO ANY TRUCK. REPEAT NECESSARY TESTING IF WATER IS ADDED AFTER INITIAL SAMPLING.
8. COARSE AGGREGATE SHALL CONFORM TO ASTM C33. PEAROCK AGGREGATE SHALL NOT BE USED.
9. ALL ANCHOR BOLTS SHALL BE ACCURATELY SET WITHIN A TOLERANCE OF +/— 1/16 INCH IN BOTH ELEVATION AND LOCATION.
10. ALL CONCRETE SHALL BE PLACED IN THE DRY. ALL FORMS SHALL BE FREE OF STANDING WATER.
11. ALL CONCRETE SHALL BE VIBRATED IN PLACE IN ACCORDANCE WITH ACI RECOMMENDED PRACTICES. NO PLACING OF CONCRETE WILL BE COMMENCED UNLESS THERE ARE A MINIMUM OF TWO OPERABLE CONCRETE VIBRATORS ON THE JOB SITE.
12. CONCRETE COVER OVER REINFORCING STEEL SHALL BE AS FOLLOWS, U.O.N.:
    - A. CONCRETE CAST AGAINST EARTH OR EXPOSED TO LIQUID: 3 IN.
    - B. ALL OTHER CONCRETE: 2 IN.
13. PROVIDE 3/4 INCH CHAMFERS ON ALL EXPOSED EDGES, EXCEPT AS OTHERWISE NOTED.
14. FORM TIES AND REINFORCING BAR SUPPORTS SHALL BE OF NON — CORROSIVE MATERIAL INCLUDING, BUT NOT LIMITED TO, FIBER GLASS, PLASTIC, AND CONCRETE BLOCK. BAR SUPPORTS PLACED ATOP VAPOR BARRIERS SHALL BE CONCRETE BLOCK.
15. ANY TIES, STRAPS OR OTHER METALLIC FORMWORK ITEMS SHALL BE REMOVED TO A DEPTH OF 1—1/2 INCHES MINIMUM BELOW FINISHED CONCRETE SURFACE. CONCRETE SHALL BE REPAIRED IN ACCORDANCE WITH ACI 301.
16. CONCRETE FINISHES:
    - A. FORMED SURFACES SHALL RECEIVE A SMOOTH — FORM FINISH IN ACCORDANCE WITH ACI 301. OFFSET BETWEEN ADJACENT PIECES OF FORMWORK FACING MATERIAL SHALL NOT EXCEED "CLASS A" TOLERANCE REQUIREMENTS OF ACI 117 (i.e. 1/8 INCH MAX. OFFSET).
    - B. SLAB SURFACES SHALL RECEIVE A TROWELED FINISH IN ACCORDANCE WITH ACI 301. FINISH TOLERANCES SHALL BE IN ACCORDANCE WITH "VERY FLAT" CLASSIFICATION REQUIREMENTS OF ACI 117 (i.e. 1/8 INCH MAX. IN 10 FEET).
    - C. WHERE A NONSLIP FINISH IS REQUIRED (WALKWAY SURFACES), GIVE THE SURFACE A BROOM FINISH OR DRY— SHAKE APPLICATION OF FINELY CRUSHED ABRASIVE PARTICLES.
17. COORDINATE SIZE, TYPE AND LOCATION OF ALL PENETRATIONS, CONDUIT, CHAMFERS AND EMBEDDED ITEMS PRIOR TO CONCRETE PLACEMENT.
18. DO NOT IMPOSE SERVICE LOADS ON CONCRETE ELEMENTS UNTIL THE CONCRETE HAS REACHED ITS SPECIFIED MINIMUM COMPRESSIVE STRENGTH.
19. ALL GROUT FOR BASE PLATES SHALL BE HIGH STRENGTH NON — SHRINK, NON— METALLIC.
20. CONTRACTOR SHALL SUBMIT A CONSTRUCTION JOINT PLAN FOR THE ENGINEER'S REVIEW PRIOR TO CONSTRUCTION.

ABBREVATION S

ALT	ALTERNATE
A.F.F	ABOVE FINISH FLOOR
C. J	CONTROL JOINT
CL	CENTERLINE
CLR	CLEAR
CMU	CONCRETE MASONRY UNIT
CONC	CONCRETE
CONST	CONSTRUCTION
CONT	CONTINUOUS
EA	EACH
E.F.	EACH FACE
E.J	E XPAN SION JOINT
EL.	ELEVATION
EQ	EQUAL
E.W.	EACH WAY
F.F.E.	FINISHED FLOOR ELEVATION MAX.
FG	FINISHED GRADE
F.V.	FIELD VERIFY
HORIZ	HORIZONTAL
JT	JOINT
MAX	MAXIMUM
MIN.	MINIMUM
M.0.	MASONRY OPENING
NTS.	NOT TO SCALE
O.C., O/C	ON CENTER
PROJ	PROJECTION
P.T.	PRESERVATIVE TREATED
SIM	SIMILAR
SOG	SLAB ON GRADE
SS	STAINLESS STEEL
STD	STANDARD
T&B	TOP & BOTTOM
TOS	TOP OF SLAB
TOF	TOP OF FOUNDATION
TOW	TOP OF WALL
TYP.	TYPICAL
U.0.N	UNLESS OTHERWISE NOTED
VERT	VERTICAL
W.P.	WORK POINT

No.	Revisions	Date	By

Kimley»Horn

© 2022 KIMLEY-HORN AND ASSOCIATES, INC.
100 2ND AVENUE SOUTH, SUITE 105N
ST. PETERSBURG, FL 33701
P: 727 547 3999
WWW.KIMLEY-HORN.COM REGISTRY NO. 35106

DESIGN ENGINEER:
SETH E. SCHMID, P.E.
FL LISCENSE NUMBER 54640
DATE:

SCALE:
DESIGN: LH
DRAWN: JQ
CHECKED: SM

GENERAL NOTES

CITY OF ST. PETE BEACH
PUMP STATION 1 REHABILITATION
PINELLAS COUNY FLORIDA

DATE: DECEMBER 2023
PROJECT NO. 148404075
SHEET NUMBER S-0.2

BIM 360://148404075 Pump Station 1 Rehab/148404075_Pump Station 1 Rehab_STRUC-R20.rvt

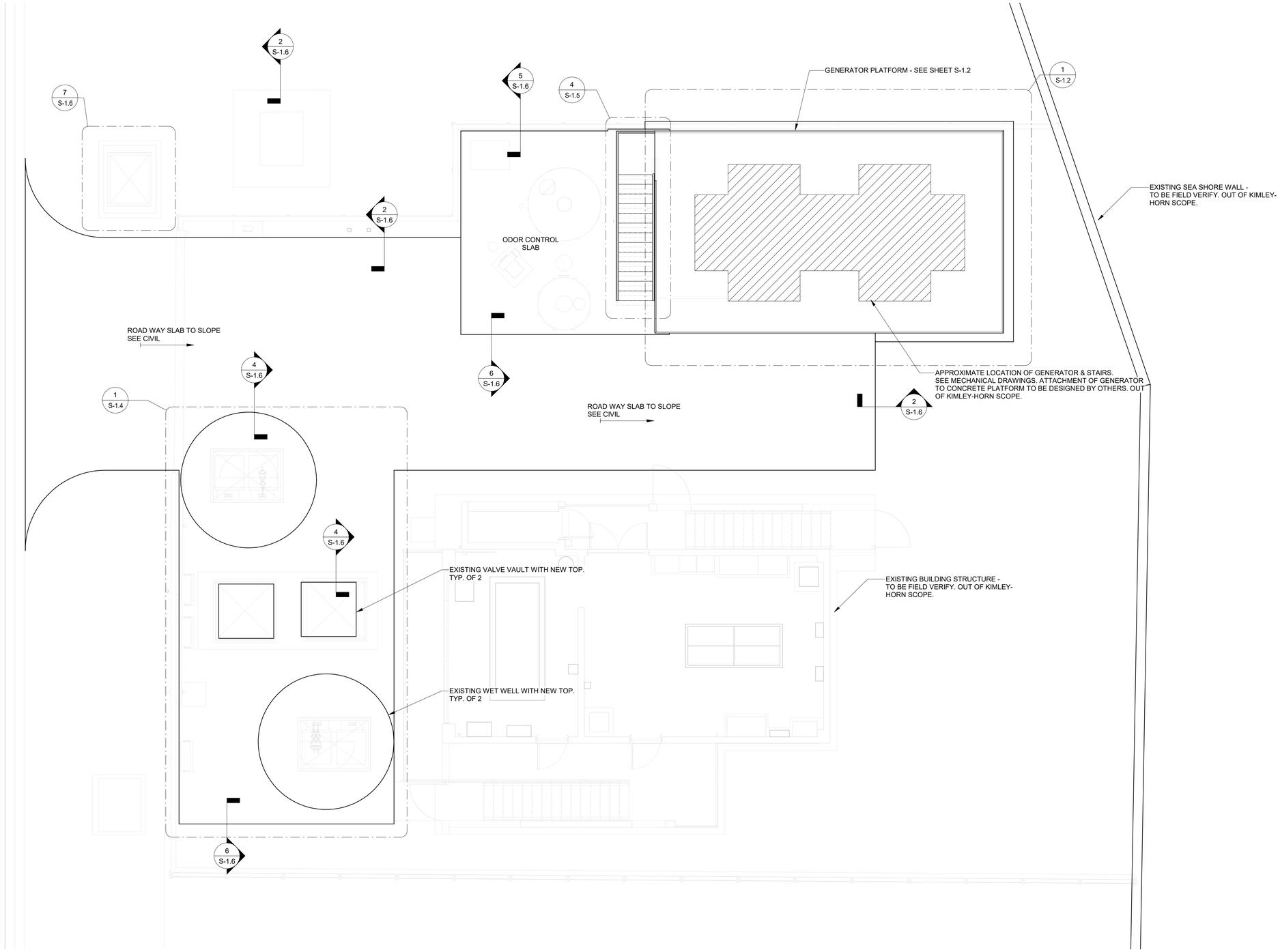

1 S-1.1 DRIVEWAY AND FOUNDATION PLAN

SCALE: 3/16" = 1'-0"

NOTE: SITE IS LOCATED IN FEMA FLOOD ZONE AE (EL. 11) ACCORDING TO MAP NO. 12103C0194H, EFFECTIVE AUGUST 23, 2021.

No.	Revisions	Date	By

Kimley»Horn

© 2022 KIMLEY-HORN AND ASSOCIATES, INC.
100 2ND AVENUE SOUTH, SUITE 105N
ST. PETERSBURG, FL 33701
P: 727 547 3999
WWW.KIMLEY-HORN.COM REGISTRY NO. 35106

DESIGN ENGINEER:
SETH E. SCHMID, P.E.
FL LISCENSE NUMBER 54640
DATE:

SCALE:
DESIGN: LH
DRAWN: JQ
CHECKED: SM

OVERALL FOUNDATION PLAN

CITY OF ST. PETE BEACH
PUMP STATION 1 REHABILITATION
PINELLAS COUNY FLORIDA

DATE: DECEMBER 2023

PROJECT NO. 148404075

SHEET NUMBER S-1.1

BIM 360://148404075 Pump Station 1 Rehab/148404075_Pump Station 1 Rehab_STRUC-R20.rvt

RC BEAM SCHEDULE						
Mark	WIDTH	DEPTH	TOP BARS	BOTTOM BARS	TIE SIZE	TIE SPACING (START AT EACH END)
BM24x24	24"	24"	(4)#7	(4)#7	#4	FIRST 12" : 4 @3" O.C., REMAINING @6" O.C.

COLUMN SCHEDULE				
Mark	SIZE (WxL)	VERT REINF	TIES	COMMENTS
C1	18"DIA	8#6	#3@6"O.C.	3" CLEAR COVER TO TIES

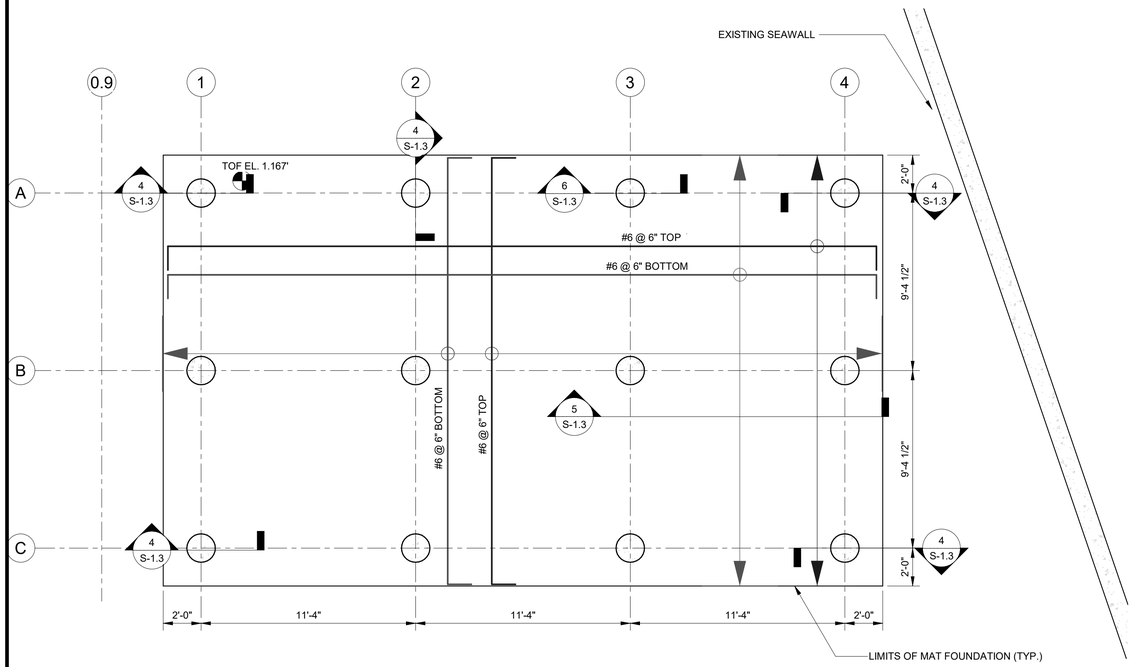

1 / S-1.2 PLATFORM MAT FOUNDATION & REBAR PLAN

SCALE: 1/4" = 1'-0"

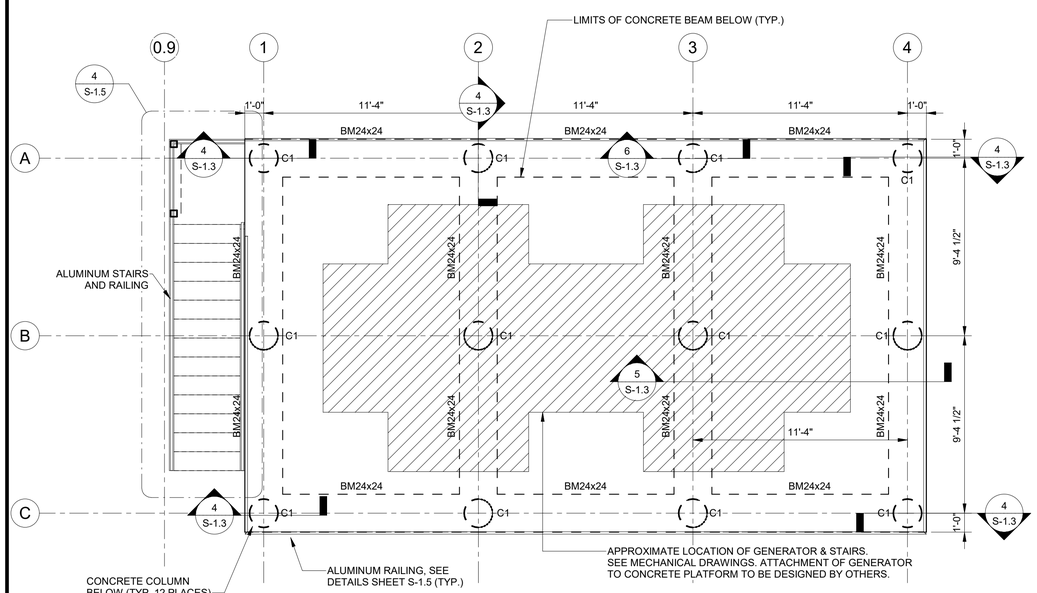

2 / S-1.2 ELEVATED PLATFORM CONCRETE FRAMING PLAN

SCALE: 1/4" = 1'-0"

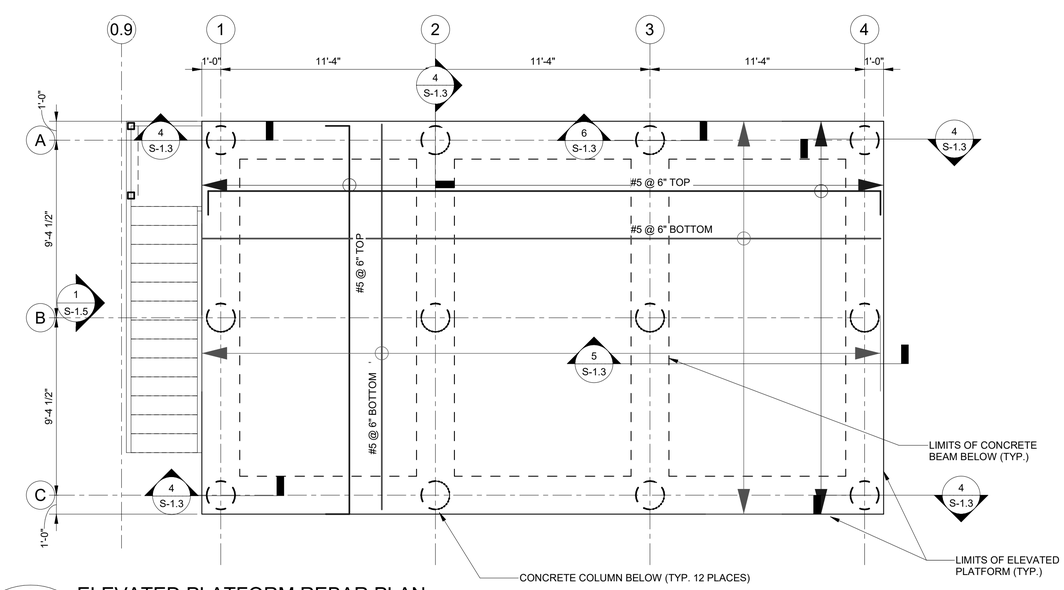

3 / S-1.2 ELEVATED PLATFORM REBAR PLAN

SCALE: 1/4" = 1'-0"

NOTE: SITE IS LOCATED IN FEMA FLOOD ZONE AE (EL. 11) ACCORDING TO MAP NO. 12103C0194H, EFFECTIVE AUGUST 23, 2021.

No.	Revisions	Date	By

Kimley»Horn

© 2022 KIMLEY-HORN AND ASSOCIATES, INC.
100 2ND AVENUE SOUTH, SUITE 105N
ST. PETERSBURG, FL 33701
P: 727 547 3999
WWW.KIMLEY-HORN.COM REGISTRY NO. 35106

DESIGN ENGINEER: SETH E. SCHMID, P.E.
FL LISCENSE NUMBER 54640
DATE:

SCALE:
DESIGN: LH
DRAWN: JQ
CHECKED: SM

ELEVATED PLATFORM FOUNDATION & CONCRETE FRAMING PLAN

CITY OF ST. PETE BEACH
PUMP STATION 1 REHABILITATION
PINELLAS COUNY FLORIDA

DATE: DECEMBER 2023
PROJECT NO. 148404075
SHEET NUMBER S-1.2

BIM 360://148404075 Pump Station 1 Rehab/148404075_Pump Station 1 Rehab_STRUC-R20.rvt

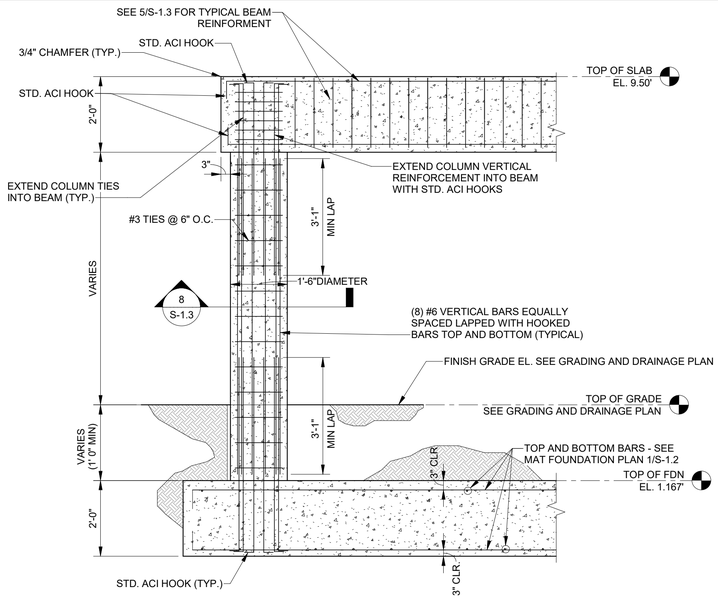

4
S-1.3
TYPICAL COLUMN REINFORCEMENT
SCALE: 1/2" = 1'-0"

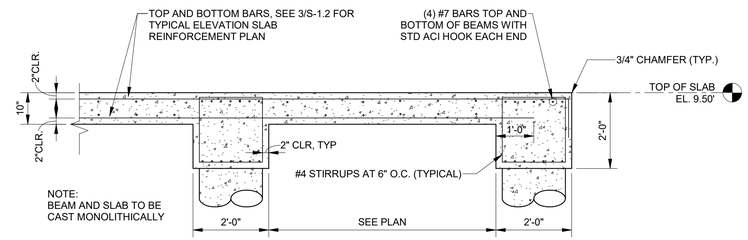

5
S-1.3
TYPICAL BEAM AND SLAB
SCALE: 1/2" = 1'-0"

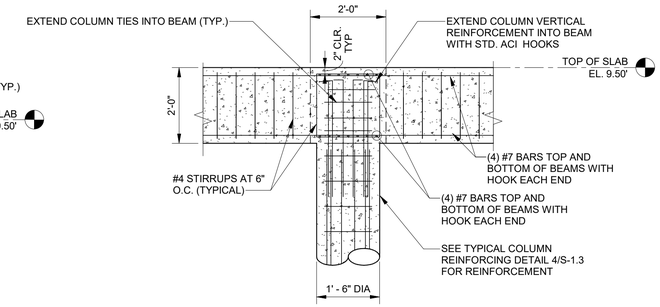

6
S-1.3
TYPICAL INTERIOR BEAM
SCALE: 1/2" = 1'-0"

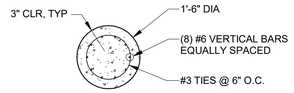

8
S-1.3
COLUMN SECTION
SCALE: 1/2" = 1'-0"

NOTE: SITE IS LOCATED IN FEMA FLOOD ZONE AE (EL. 11) ACCORDING TO MAP NO. 12103C0194H, EFFECTIVE AUGUST 23, 2021.

No.	Revisions	Date	By

Kimley»Horn

© 2022 KIMLEY-HORN AND ASSOCIATES, INC.
100 2ND AVENUE SOUTH, SUITE 105N
ST. PETERSBURG, FL 33701
P: 727 547 3999
WWW.KIMLEY-HORN.COM REGISTRY NO. 35106

DESIGN ENGINEER:
SETH E. SCHMID, P.E.
FL LISCENSE NUMBER 54640
DATE:

SCALE:
DESIGN: LH
DRAWN: JQ
CHECKED: SM

ELEVATED PLATFORM DETAILS

CITY OF ST. PETE BEACH
PUMP STATION 1 REHABILITATION
PINELLAS COUNY FLORIDA

DATE: DECEMBER 2023
PROJECT NO. 148404075
SHEET NUMBER
S-1.3

BIM 360://148404075 Pump Station 1 Rehab/148404075_Pump Station 1 Rehab_STRUC-R20.rvt

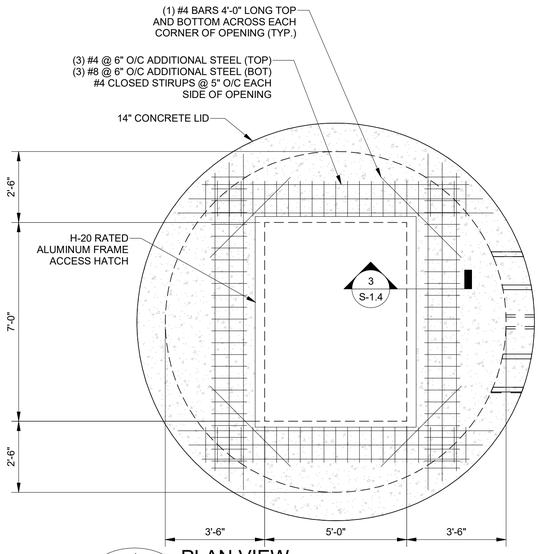

1 S-1.4 PLAN VIEW
SCALE: 3/8" = 1'-0"

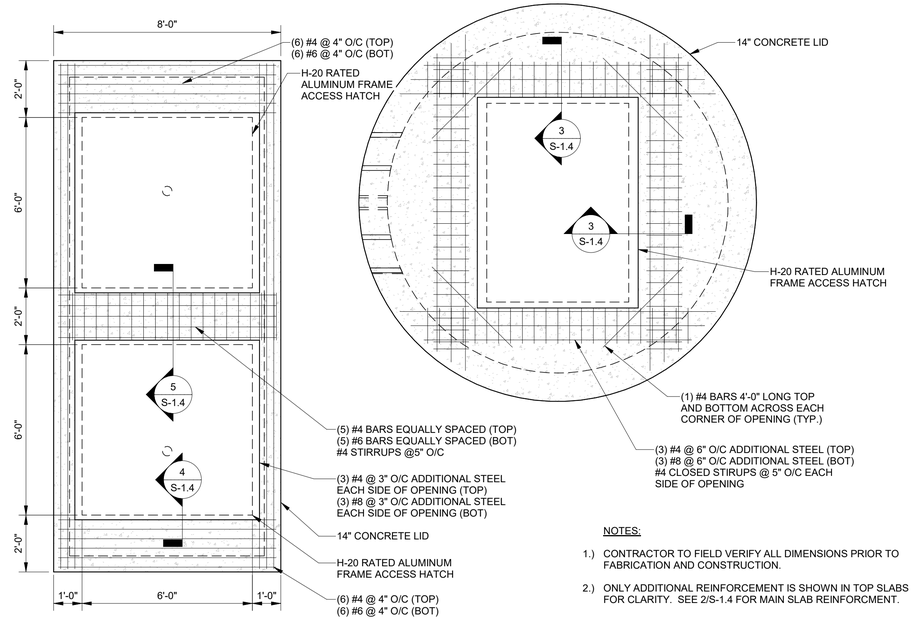

NOTES:

1.) CONTRACTOR TO FIELD VERIFY ALL DIMENSIONS PRIOR TO FABRICATION AND CONSTRUCTION.

2.) ONLY ADDITIONAL REINFORCEMENT IS SHOWN IN TOP SLABS FOR CLARITY. SEE 2/S-1.4 FOR MAIN SLAB REINFORCMENT.

GENERAL NOTES:

1. CONTRACTOR SHALL FIELD VERIFY EXISTING CONDITIONS PRIOR TO BEGINNING CONSTRUCTION AND ORDERING EQUIPMENT. CONTRACTOR SHALL NOTIFY ENGINEER OF DISCREPANCIES.
2. CONTRACTOR SHALL TAKE ALL PRECAUTIONARY MEASURES NECESSARY TO PROTECT EXISTING EQUIPMENT, UTILITIES, STRUCTURES, AND PERSONNEL FROM DAMAGE OR INJURY DURING CONSTRUCTION.
3. CONSTRUCTION SEQUENCE SHALL BE COORDINATED TO AVOID ANY PUMP STATION INTERRUPTION.
4. CONTRACTOR TO COORDINATE ALL PIPE AND CONDUIT LOCATIONS WITH MECHANICAL AND ELECTRICAL DRAWINGS PRIOR TO PLACING CONCRETE. MECHANICAL CONTRACTOR SHALL PROVIDE SHOP DRAWINGS FOR EQUIPMENT AND ANCHOR BOLT LOCATIONS.
5. STRUCTURAL DRAWINGS SHALL BE WORKED TOGETHER WITH MECHANICAL AND ELECTRICAL DRAWINGS TO PROPERLY LOCATE WALL PIPES, PIPE SLEEVES, ANCHOR BOLTS, BLOCKOUTS, ETC. DISCREPANCIES SHALL BE BROUGHT TO THE ATTENTION OF THE ENGINEER OF RECORD BEFORE PROCEEDING WITH THE WORK.
6. CONTRACTOR SHALL TAKE ALL NECESSARY PRECAUTIONS TO PREVENT FLOATATION OF STRUCTURES FULLY UNTIL CONSTRUCTED AND BACKFILL IS IN PLACE AND COMPACTED.
7. CLEARANCE OF REINFORCING STEEL FROM THE FACE OF CONCRETE TO THE OUTERMOST TIE OR BAR SHALL BE 2", UNLESS OTHERWISE NOTED ON THE DRAWINGS.

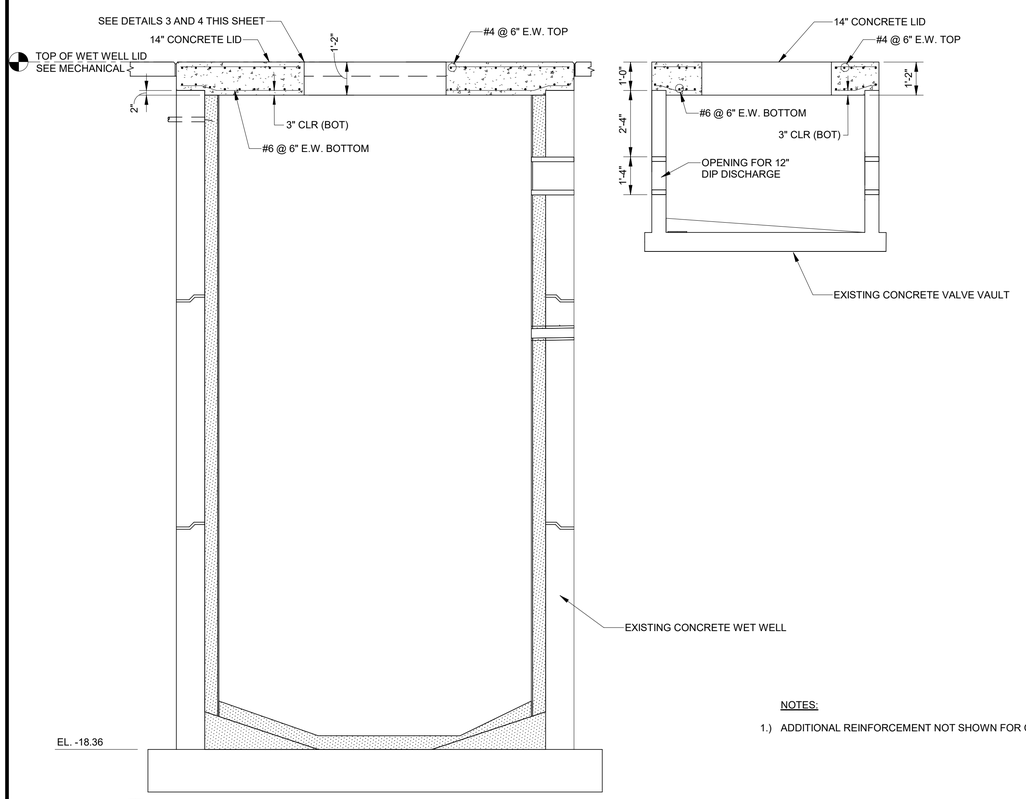

2 S-1.4 SIDE VIEW
SCALE: 3/8" = 1'-0"

NOTES:

1.) ADDITIONAL REINFORCEMENT NOT SHOWN FOR CLARITY.

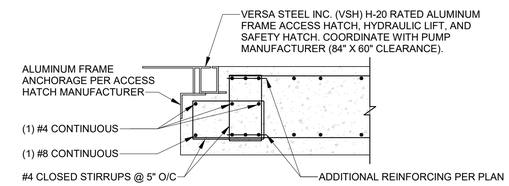

3 S-1.4 DETAIL 3
SCALE: 1" = 1'-0"

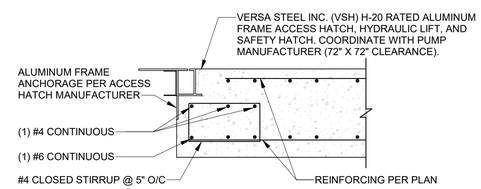

4 S-1.4 DETAIL 4
SCALE: 1" = 1'-0"

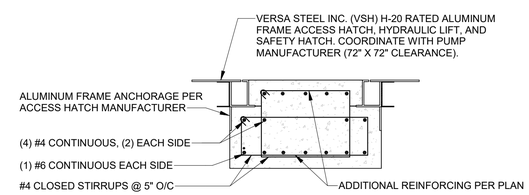

5 S-1.4 DETAIL 5
SCALE: 1" = 1'-0"

NOTE: SITE IS LOCATED IN FEMA FLOOD ZONE AE (EL. 11) ACCORDING TO MAP NO. 12103C0194H, EFFECTIVE AUGUST 23, 2021.

No.	Revisions	Date	By

Kimley»Horn
© 2022 KIMLEY-HORN AND ASSOCIATES, INC.
100 2ND AVENUE SOUTH, SUITE 105N
ST. PETERSBURG, FL 33701
P: 727 547 3999
WWW.KIMLEY-HORN.COM REGISTRY NO. 35106

DESIGN ENGINEER: SETH E. SCHMID, P.E.
FL LISCENSE NUMBER 54640
DATE:

SCALE:
DESIGN: LH
DRAWN: JQ
CHECKED: SM

WET WELL DETAILS

CITY OF ST. PETE BEACH
PUMP STATION 1 REHABILITATION
PINELLAS COUNY FLORIDA

DATE: DECEMBER 2023
PROJECT NO. 148404075
SHEET NUMBER S-1.4

BIM 360://148404075 Pump Station 1 Rehab/148404075_Pump Station 1 Rehab_STRUC-R20.rvt

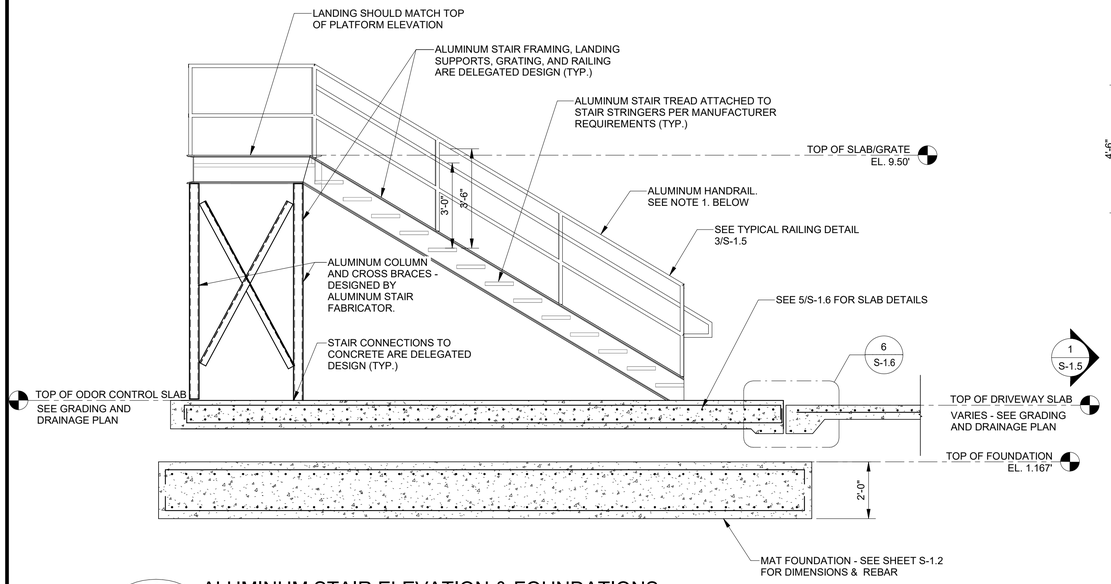

1 S-1.5 ALUMINUM STAIR ELEVATION & FOUNDATIONS

SCALE: 3/8" = 1'-0"

NOTE: 1. DESIGN STAIRS, RAILING AND HANDRAILS IN ACCORDANCE WITH THE CURRENT EDITION OF THE FLORIDA BUILDING CODE

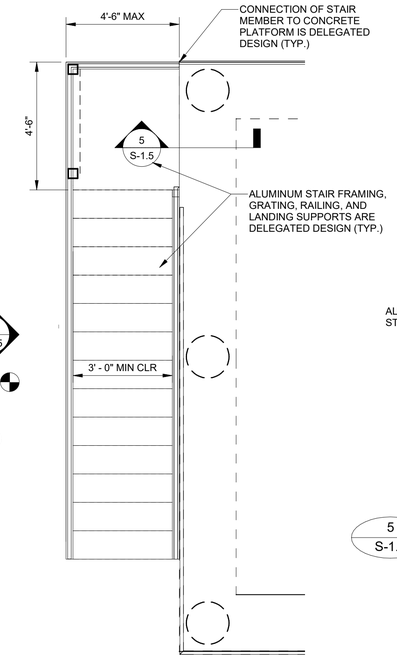

4 S-1.5 ALUMINUM STAIR FRAMING PLAN

SCALE: 3/8" = 1'-0"

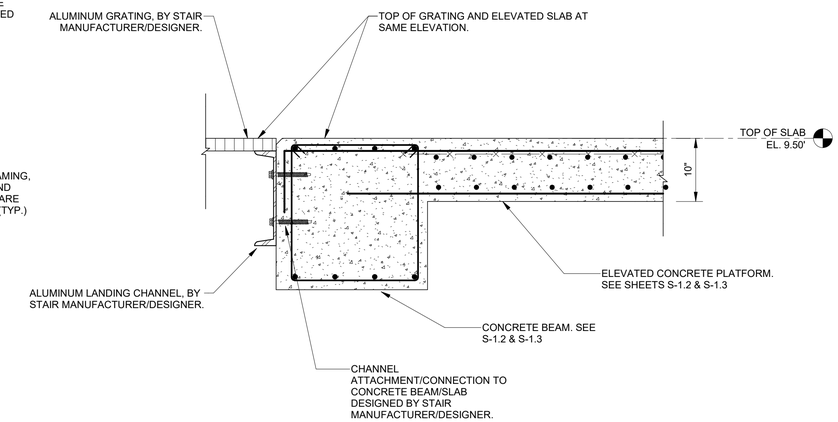

5 S-1.5 STAIR LANDING CONNECTION TO PLATFORM

SCALE: 1" = 1'-0"

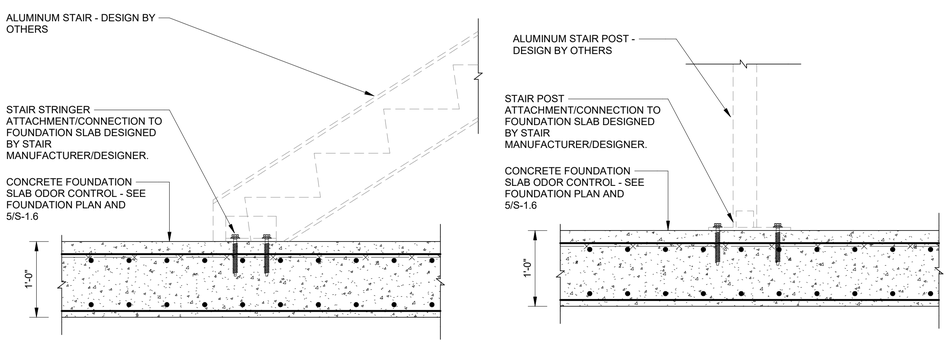

2 S-1.5 STAIR STRINGER CONNECTION AND POST CONNECTION TO FOUNDATION

SCALE: 1" = 1'-0"

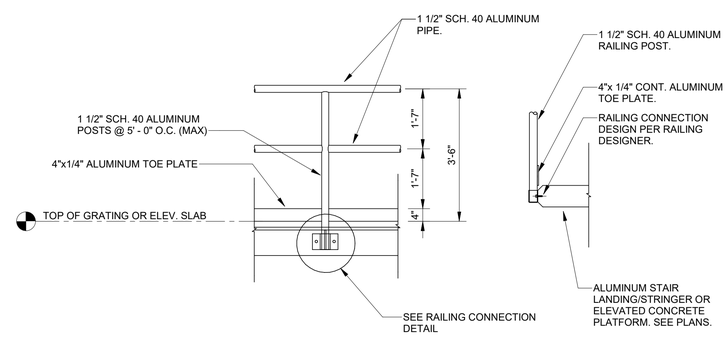

DESIGN SPECIFICATIONS FOR FACTORY-INDUSTRIAL RAILING APPLICATIONS

1. RAILING SHALL BE DESIGNED IN ACCORDANCE WITH THE CURRENT EDITION OF THE FLORIDA BUILDING CODE.
2. THE MANUFACTURER SHALL SUBMIT CALCULATIONS SIGNED AND SEALED BY A FLORIDA REGISTERED PROFESSIONAL ENGINEER FOR REVIEW.
3. POST SPACING SHALL BE A MAXIMUM OF 5' - 0". POSTS AND RAILINGS SHALL BE A MINIMUM OF 1 1/2" SCH. 40 ALUMINUM PIPE, ALLOY 6063-T6, ASTM-B-429 OR ASTM-B-221. THE RAILING MANUFACTURER SHALL SHOW THAT THEIR POSTS ARE OF ADEQUATE STRENGTH TO MEET THE LOADING REQUIREMENTS. IF THE MANUFACTURER'S POSTS ARE NOT OF ADEQUATE STRENGTH, THE MANUFACTURER MAY REDUCE POST SPACING, OR ADD REINFORCING DOWEL, OR DO BOTH TO MEET LOADING REQUIREMENTS.
4. RAILING POSTS AND HORIZONTAL MEMBERS SHALL BE WELDED TOGETHER AND SHALL NOT BE MECHANICALLY CONNECTED EXCEPT AT EXPANSION JOINTS.
5. POSTS SHALL NOT INTERRUPT CONTINUATION OF THE TOP RAIL AT ANY POINT ALONG THE RAILING, INCLUDING CORNERS AND END TERMINATIONS (OSHA 191023). THE TOP SURFACE OF THE TOP RAILING SHALL BE SMOOTH AND UNINTERRUPTED BY PROJECTING FITTINGS.
6. THE MIDRAIL AT A CORNER RETURN SHALL BE ABLE TO WITHSTAND A 200 LB. LOAD WITHOUT LOOSENING. THE MANUFACTURER IS TO DETERMINE THIS DIMENSIONS FOR THEIR SYSTEM.
7. TOE PLATE SHALL CONFORM TO OSHA STANDARDS. TOE PLATE SHALL BE A MINIMUM OF 4" HIGH AND SHALL BE AN EXTRUSION THAT ATTACHES TO THE POSTS TO ALLOW FOR EXPANSION AND CONTRACTION BETWEEN POSTS. TOE PLATES SHALL BE SET 1/4" ABOVE THE WALKING SURFACE. TOE PLATES SHALL BE PROVIDED ON RAILINGS AS REQUIRED BY OSHA AND/OR AS SHOWN ON DRAWINGS.
8. FIELD WELDING OF THE ALUMINUM RAILING IS NOT ALLOWED.

3 S-1.5 TYPICAL RAILING DETAIL

SCALE: 1/2" = 1'-0"

NOTE: SITE IS LOCATED IN FEMA FLOOD ZONE AE (EL. 11) ACCORDING TO MAP NO. 12103C0194H, EFFECTIVE AUGUST 23, 2021.

No.	Revisions	Date	By

Kimley»Horn

© 2022 KIMLEY-HORN AND ASSOCIATES, INC.
100 2ND AVENUE SOUTH, SUITE 105N
ST. PETERSBURG, FL 33701
P: 727 547 3999
WWW.KIMLEY-HORN.COM REGISTRY NO. 35106

DESIGN ENGINEER: SETH E. SCHMID, P.E.
FL LISCENSE NUMBER 54640
DATE:

SCALE:
DESIGN: LH
DRAWN: JQ
CHECKED: SM

STRUCTURAL - STAIR DETAILS

CITY OF ST. PETE BEACH
PUMP STATION 1 REHABILITATION
PINELLAS COUNY FLORIDA

DATE: DECEMBER 2023

PROJECT NO. 148404075

SHEET NUMBER S-1.5

BIM 360://148404075 Pump Station 1 Rehab/148404075_Pump Station 1 Rehab_STRUC-R20.rvt

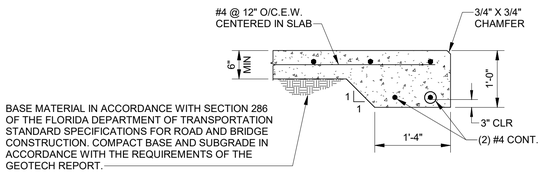

2 / S-1.6 SECTION 2

SCALE: 3/4" = 1'-0"

NOTE: BASE IS NOT REQUIRED BELOW TRANSFORMER PAD.

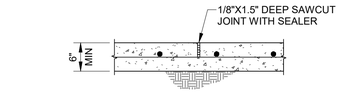

3 / S-1.6 TYPICAL CONTROL JOINT

SCALE: 3/4" = 1'-0"

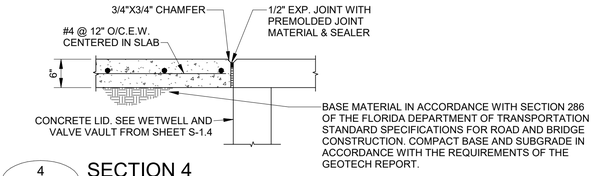

4 / S-1.6 SECTION 4

SCALE: 3/4" = 1'-0"

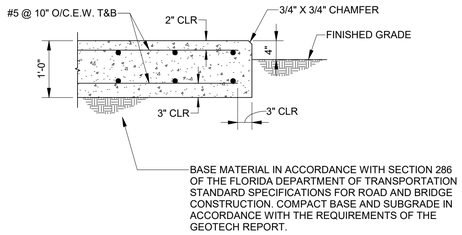

5 / S-1.6 SECTION 5

SCALE: 3/4" = 1'-0"

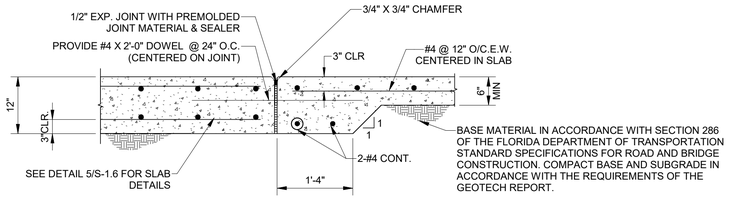

6 / S-1.6 SECTION 6

SCALE: 3/4" = 1'-0"

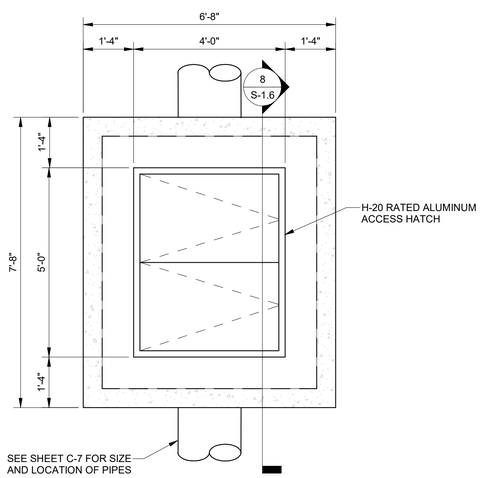

7 / S-1.6 FLOW METER VAULT TOP SLAB

SCALE: 1/2" = 1'-0"

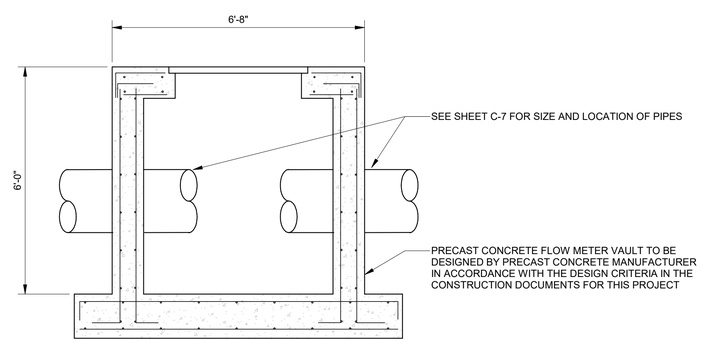

8 / S-1.6 FLOW METER VAULT TYP SECTION

SCALE: 1/2" = 1'-0"

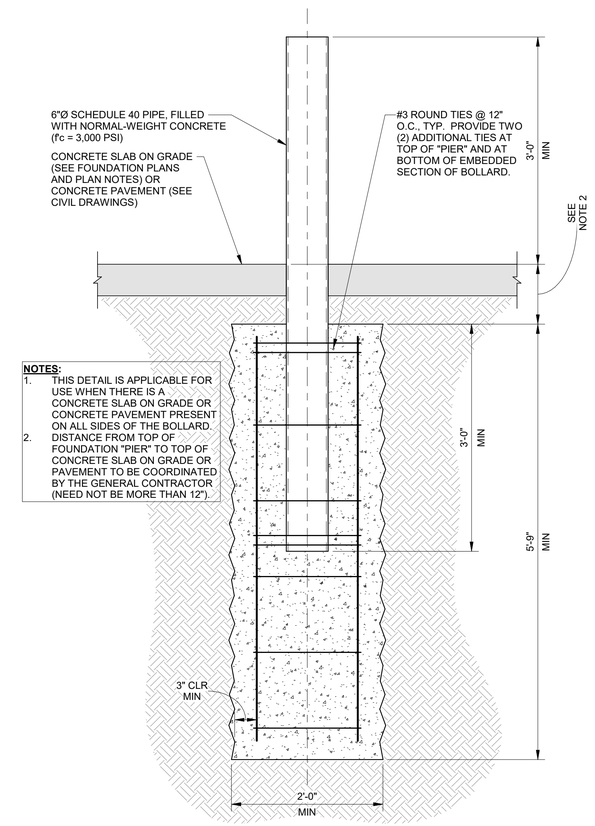

NOTES:

1. THIS DETAIL IS APPLICABLE FOR USE WHEN THERE IS A CONCRETE SLAB ON GRADE OR CONCRETE PAVEMENT PRESENT ON ALL SIDES OF THE BOLLARD.
2. DISTANCE FROM TOP OF FOUNDATION "PIER" TO TOP OF CONCRETE SLAB ON GRADE OR PAVEMENT TO BE COORDINATED BY THE GENERAL CONTRACTOR (NEED NOT BE MORE THAN 12").

1 / S-1.6 S-1.6 - IMPACT RATED BOLLARD ON GRADE

SCALE: 1" = 1'-0"

NOTE: SITE IS LOCATED IN FEMA FLOOD ZONE AE (EL. 11) ACCORDING TO MAP NO. 12103C0194H, EFFECTIVE AUGUST 23, 2021.

No.	Revisions	Date	By

Kimley»Horn

© 2022 KIMLEY-HORN AND ASSOCIATES, INC.
100 2ND AVENUE SOUTH, SUITE 105N
ST. PETERSBURG, FL 33701
P: 727 547 3999
WWW.KIMLEY-HORN.COM REGISTRY NO. 35106

DESIGN ENGINEER:
SETH E. SCHMID, P.E.
FL LISCENSE NUMBER 54640
DATE:

SCALE:
DESIGN: LH
DRAWN: JQ
CHECKED: SM

STRUCTURAL - METER VAULT AND SLAB DETAILS

CITY OF ST. PETE BEACH
PUMP STATION 1 REHABILITATION
PINELLAS COUNY FLORIDA

DATE: DECEMBER 2023

PROJECT NO. 148404075

SHEET NUMBER S-1.6

BIM 360://148404075 Pump Station 1 Rehab/148404075_Pump Station 1 Rehab_STRUC-R20.rvt

CONDUIT RUN EXPOSED

CONDUIT RUN CONCEALED UNDERGROUND

CONDUIT RUN CONCEALED IN FLOOR OR SLAB

G — GROUNDING ELECTRODE CONDUCTOR

CONDUIT STUB OUT AND CAP

GROUND ROD

JUNCTION BOX

JUNCTION BOX WITH FLEXIBLE CONNECTION

480V
15 KVA, 1*
120/240V

TRANSFORMER, 480V INDICATED PRIMARY VOLTAGE, 120/240V INDICATES SECONDARY VOLTAGE, 15 KVA REPRESENTS POWER RATING, AND 1* INDICATES SINGLE PHASE (THREE PHASE IF NOT INDICATED)

3P
30A

THERMAL MAGNETIC CIRCUIT BREAKER WITH NUMBER OF POLES AND AMPERE RATING

XX

COMBINATION MAGNETIC STARTER WITH CONTROL POWER TRANSFORMER (SIZED FOR LOAD). LETTERS INDICATE TYPE :
N – NON–REVERSING
R – REVERSING
2S – TWO–SPEED
C – CONTACTOR
SS – SOLID STATE SOFT START

XXX

XXX DEVICE	DESCRIPTION
HLS	HIGH LEVEL SWITCH
HOA	HAND–OFF–AUTO
LD	LEAK DETECTION
LLS	LOW LEVEL SWITCH
LOR	LOCAL–OFF–REMOTE
PB	PUSH BUTTON
RTU	REMOTE TERMINAL UNIT
SS	SOFT STARTER
SS/B	SOFT START OR BYPASS
TS	TEMPERATURE SWITCH
TVSS	TRANSIENT VOLTAGE SURGE SUPPRESSOR
ZS	POSTION SENSOR (LIMIT SWITCH)

FUSE

XX

MOTOR

THERMAL OVERLOAD

UTILITY METER

TRANSFER SWITCH

ELECTRIC PANELBOARD

DISCONNECT OR SAFETY SWITCH

CHAIN HUNG 8' INDUSTRIAL FLUORESCENT LIGHTING FIXTURE. REFER TO FIXTURE SCHEDULE.

$ SINGLE POLE SWITCH, 20A, 120/277V. MOUNT 44" AFF OR AS NOTED.

DUPLEX RECEPTACLE, 20A 125VAC. MOUNT 18" AFF OR AS NOTED.

LB CONDUIT BODY/FITTING.

HOME RUN TO PANELBOARD. CIRCUIT(S) AS INDICATED.

WIRES INDICATED AS FOLLOWS :

TWO WIRES:

THREE WIRES:

FOUR WIRES ETC:

NEUTRAL WIRE

ISOLATED GROUND WIRE

OVIDE 2–#12 THWN CU IN 1/2" C. UNLESS OTHERWISE NOTED, AND GROUND WIRE (NOT INDICATED) IN ALL POWER AND LIGHTING RACEWAYS.

FIELD WIRING

FLOAT SWITCH. OPENS ON LOW LEVEL.

FLOAT SWITCH. CLOSES ON LOW LEVEL.

NORMALLY OPEN (N.O.) CONTACT

NORMALLY CLOSED (N.C.) CONTACT

FUSE

GROUND CONNECTION

R

INDICATING PILOT LIGHT LETTER INDICATES COLOR OF LENS

DISCONNECT OR TOGGLE SWITCH

NORMALLY OPEN MOMENTARY CIRCUIT CLOSING PUSH–BUTTON SWITCH SPRING OPEN. NUMBER OF ELECTRICAL CONTACTS ON SWITCH SHOWN ON CONTROL SCHEMATIC

NORMALLY CLOSED MOMENTARY CIRCUIT OPENING PUSH–BUTTON SWITCH SPRING CLOSE. NUMBER OF ELECTRICAL CONTACTS ON SWITCH SHOWN ON CONTROL SCHEMATIC

LIMIT SWITCH NORMALLY CLOSED CONTACT CONTACT OPENS WHEN ACTUATED

TORQUE SWITCH NORMALLY CLOSED CONTACT CONTACT OPENS WHEN ACTUATED

PUMP THERMAL SENSOR

FAN THERMOSTAT

ABBREVIATIONS:

A	AMPS
AFF	ABOVE FINISHED FLOOR
AFG	ABOVE FINISHED GRADE
C	CONDUIT
EXIST	EXISTING
ELEC	ELECTRICAL
GFI	GROUND FAULT INTERRUPTER
GND	GROUNDING CONDUCTOR
HP	HORSEPOWER
HZ	HERTZ
IG	ISOLATED GROUND
KVA	KILOVOLT AMPERES
KW	KILOWATTS
MAX	MAXIMUM
MIN	MINIMUM
N/A	NOT APPLICABLE
PH	PHASE
RECP	RECEPTACLE
RPM	REVOLUTIONS PER MINUTE
RTU	REMOTE TERMINAL UNIT
TYP	TYPICAL
V	VOLTS
WP	WEATHERPROOF

EXAMPLE OF SECTION CUT AND DETAIL

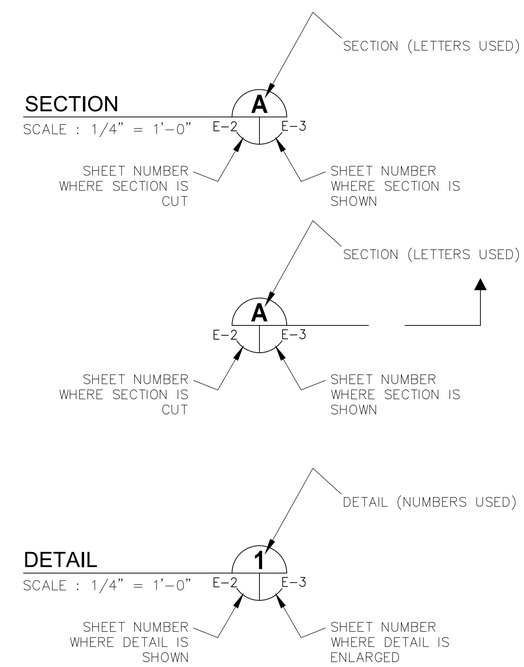

THOMAS ENGINEERING
777 S. Harbour Island Blvd, STE 350, TAMPA, FL 33602
813.227.9190
Certificate of Authorization No. 00031028

No.	Revisions	Date	By

Kimley»Horn
© 2024 KIMLEY-HORN AND ASSOCIATES, INC.
200 CENTRAL AVE, SUITE 600
ST. PETERSBURG, FL 33701
P: 727 547 3999
WWW.KIMLEY-HORN.COM REGISTRY NO. 35106

DESIGN ENGINEER:
TIMOTHY THOMAS, P.E.
FL LICENSE NUMBER 47079
DATE:

SCALE: AS NOTED
DESIGN: TDT
DRAWN: JLT
CHECKED: GLW

ELECTRICAL LEGEND AND ABBREVIATIONS

CITY OF ST. PETE BEACH
PUMP STATION 1 REHABILITATION
PINELLAS COUNY FLORIDA

DATE:
AUGUST 2024

PROJECT NO.
148404075

SHEET NUMBER
E-1

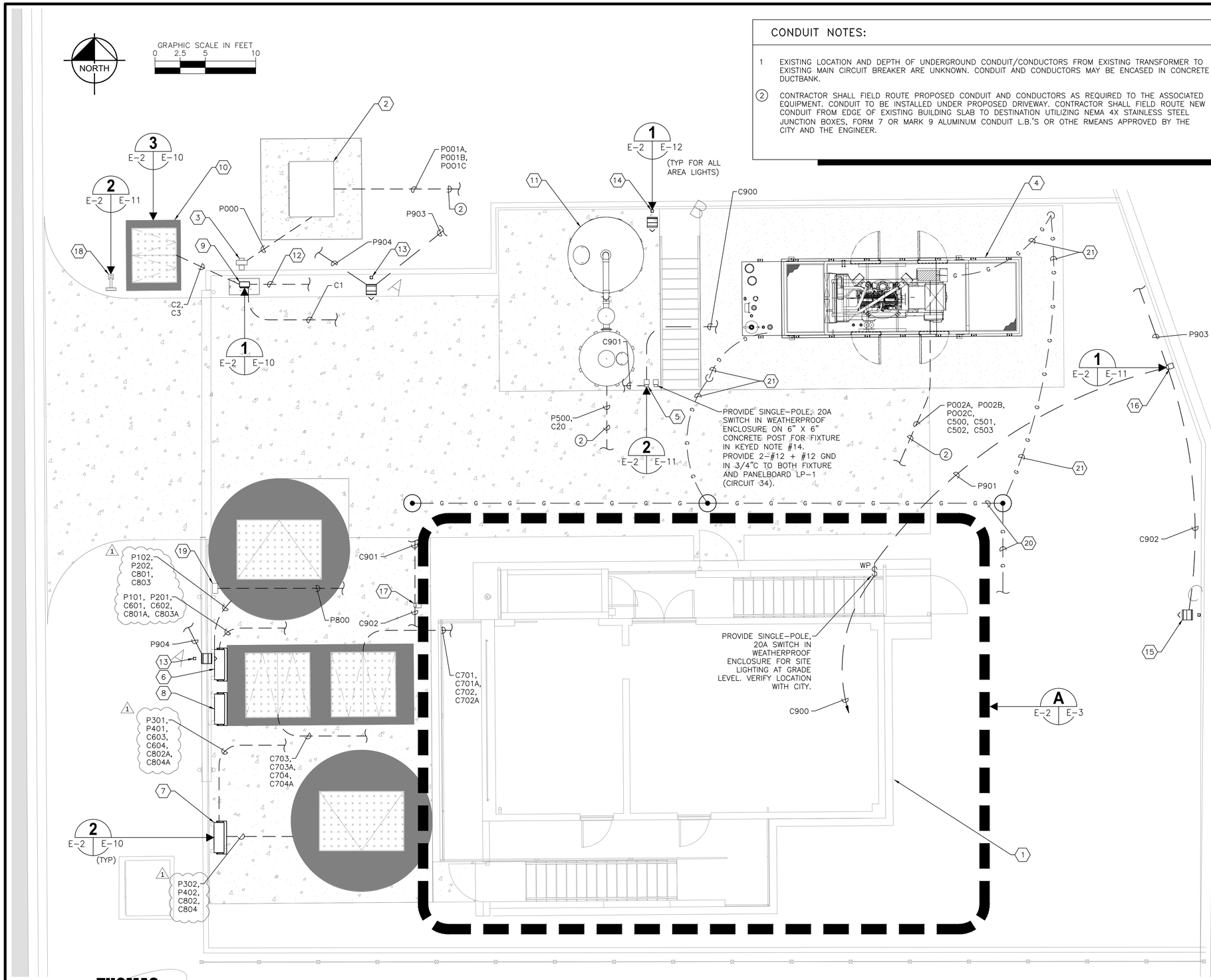

CONDUIT NOTES:

1 EXISTING LOCATION AND DEPTH OF UNDERGROUND CONDUIT/CONDUCTORS FROM EXISTING TRANSFORMER TO EXISTING MAIN CIRCUIT BREAKER ARE UNKNOWN. CONDUIT AND CONDUCTORS MAY BE ENCASED IN CONCRETE DUCTBANK.

(2) CONTRACTOR SHALL FIELD ROUTE PROPOSED CONDUIT AND CONDUCTORS AS REQUIRED TO THE ASSOCIATED EQUIPMENT. CONDUIT TO BE INSTALLED UNDER PROPOSED DRIVEWAY. CONTRACTOR SHALL FIELD ROUTE NEW CONDUIT FROM EDGE OF EXISTING BUILDING SLAB TO DESTINATION UTILIZING NEMA 4X STAINLESS STEEL JUNCTION BOXES, FORM 7 OR MARK 9 ALUMINUM CONDUIT L.B.'S OR OTHE RMEANS APPROVED BY THE CITY AND THE ENGINEER.

KEYED NOTES:

1. EXISTING ELECTRICAL AND GENERATOR BUILDING. REFER TO SHEET E-3 FOR WORK REQUIRED.
2. PROPOSED PAD-MOUNTED TRANSFORMER PROVIDED BY DUKE ENERGY.
3. PROPOSED ELECTRIC METER MOUNTED ON 6" SQUARE CONCRETE POST. COORDINATE ALL REQUIREMENTS WITH DUKE.
4. PROPOSED 277/480V, 700KW STANDBY GENERATOR. REFER ALSO TO SPECIFICATIONS.
5. PROPOSED EMERGENCY GENERATOR SHUTDOWN PUSHBUTTON STATION No. 3. REFER TO DETAIL ON SHEET E-11.
6. PROPOSED NORTH WETWELL PUMP JUNCTION BOX.
7. PROPOSED SOUTH WETWELL PUMP JUNCTION BOX.
8. PROPOSED RTU PANEL (BY OTHERS).
9. PROPOSED FLOW METER TRANSMITTER. PROLINE PROMAG W 400. REFER TO DETAIL ON SHEET E-10.
10. PROPOSED FLOW METER VAULT. REFER TO DETAIL ON SHEET E-10 FOR TYPICAL METER ELECTRICAL INSTALLATION REQUIREMENTS.
11. PROPOSED ODOR CONTROL UNIT.
12. PROVIDE AND INSTALL 2-#12 + 1-#12 GND IN 3/4"C. TO PANELBOARD 'LP-1'. CONTRACTOR TO USE EXISTING 20A SPARE CIRCUIT BREAKER (CIRCUIT 32).
13. PROPOSED POLE-MOUNTED FIXTURE TYPE 'A' (DSXF1 LED P2 40K WFL). CONTRACTOR TO FIELD ADJUST TILT AS REQUIRED. INITIAL TILT ASSUMED TO BE 15'.
14. PROPOSED POLE-MOUNTED FIXTURE TYPE 'B' (DSXF1 LED P1 40K MSP). CONTRACTOR TO FIELD ADJUST TILT AS REQUIRED. INITIAL TILT ASSUMED TO BE 30'.
15. PROPOSED POLE-MOUNTED FIXTURE TYPE 'C' (DSXF1 LED P1 40K HMF). CONTRACTOR TO FIELD ADJUST TILT AS REQUIRED. INITIAL TILT ASSUMED TO BE 25'. FIXTURE TO BE CONTROLLERBY MOTION SENSOR AND SWITCH.
16. PROVIDE AND INSTALL POLE-MOUNTED MOTION DETECTOR. REFER TO DETAIL ON SHEET E-11.
17. PROPOSED EMERGENCY GENERATOR SHUTDOWN PUSHBUTTON STATION No. 2. CONTRACTOR TO COORDINATE PROPOSED LOCATION WITH CITY OF ST. PETE BEACH.
18. NEW GATE PEDESTAL. CONTRACTOR SHALL PROVIDE SWIPE ACCESS CARD, GATE CONTROL LOOPS, KNOW BOX, PHOTOELECTRIC SENSORS AND ALL OTHER DEVICES AND WIRING FOR A COMPLETE AND FUNCTIONING SYSTEM. GATE PEDESTAL SHALL BE INSTALLED 9'-0" WEST OF GATE. REFER TO CIVIL PLANS FOR EXACT LOCATION. REFER ALSO TO DETAIL ON SHEET E-11.
19. NEW GATE OPERATOR. REFER TO OTHER DRAWINGS FOR EXACT LOCAITON. OPERATOR TO BE POWERED FROM EXISTING PANELBOARD LP-1.
20. RECORD DRAWINGS INDICATE THE EXISTING GROUNDING SYSTEM IS LOCATED IN THIS AREA. THE CONTRACTOR SHALL LOCATE (AND PROTECT DURING DEMOLITION OR RELOCATE) THE EXISTING GRID FOR CONNECTION TO GENERATOR GROUNDING (KEYED NOTE #21 BELOW.)
21. PROVIDE TANK AND GENERATOR GROUNDING CONSISTING OF #4/0 BARE COPPER CABLE (LOCATIONS TO BE DETERMINED BY SHOP DRAWINGS). MECHANICALLY BOND BOTH GROUNDING ELECTRODES TO SLAB REBAR IN 2 PLACES, INSTALL IN 1-1/4" PVC CONDUIT ON COLUMN AND MECHANICALLY BOND BOTH GROUNDING ELECTRODES IN 2 PLACES TO REBAR IN FOUNDATION. CONTINUE TO EXISTING BUILDING GROUND.

GENERAL NOTES:

1. NOT ALL CONDUIT/CONDUCTORS SHOWN FOR CLARITY. REFER TO OTHER SHEETS FOR OTHER REQUIREMENTS.
2. REFER TO SHEET E-5 FOR SITE LIGHTING PHOTOMETRIC PLAN.
3. REFER TO SHEET E-9 FOR FIXTURE SCHEDULE.
4. CONTRACTOR TO COORDINATE WITH CITY'S SCADA VENDOR FOR TRANSDUCERS AND SCADA IMPLEMENTATION.

THOMAS ENGINEERING
777 S. Harbour Island Blvd, STE 350, TAMPA, FL 33602
813.227.9190
Certificate of Authorization No. 00031028

ELECTRICAL SITE PLAN PLAN
SCALE: 1" = 5'-0"

No.	Revisions	Date	By
1	IFC REVISION NO.1	08/14/24	TDT

Kimley»Horn
© 2024 KIMLEY-HORN AND ASSOCIATES, INC.
200 CENTRAL AVE, SUITE 600
ST. PETERSBURG, FL 33701
P: 727 547 3999
WWW.KIMLEY-HORN.COM REGISTRY NO. 35106

DESIGN ENGINEER: TIMOTHY THOMAS, P.E.
FL LICENSE NUMBER 47079
DATE:

SCALE: AS NOTED
DESIGN: TDT
DRAWN: JLT
CHECKED: GLW

ELECTRICAL SITE PLAN

CITY OF ST. PETE BEACH
PUMP STATION 1 REHABILITATION
PINELLAS COUNY FLORIDA

DATE: AUGUST 2024
PROJECT NO. 148404075
SHEET NUMBER E-2

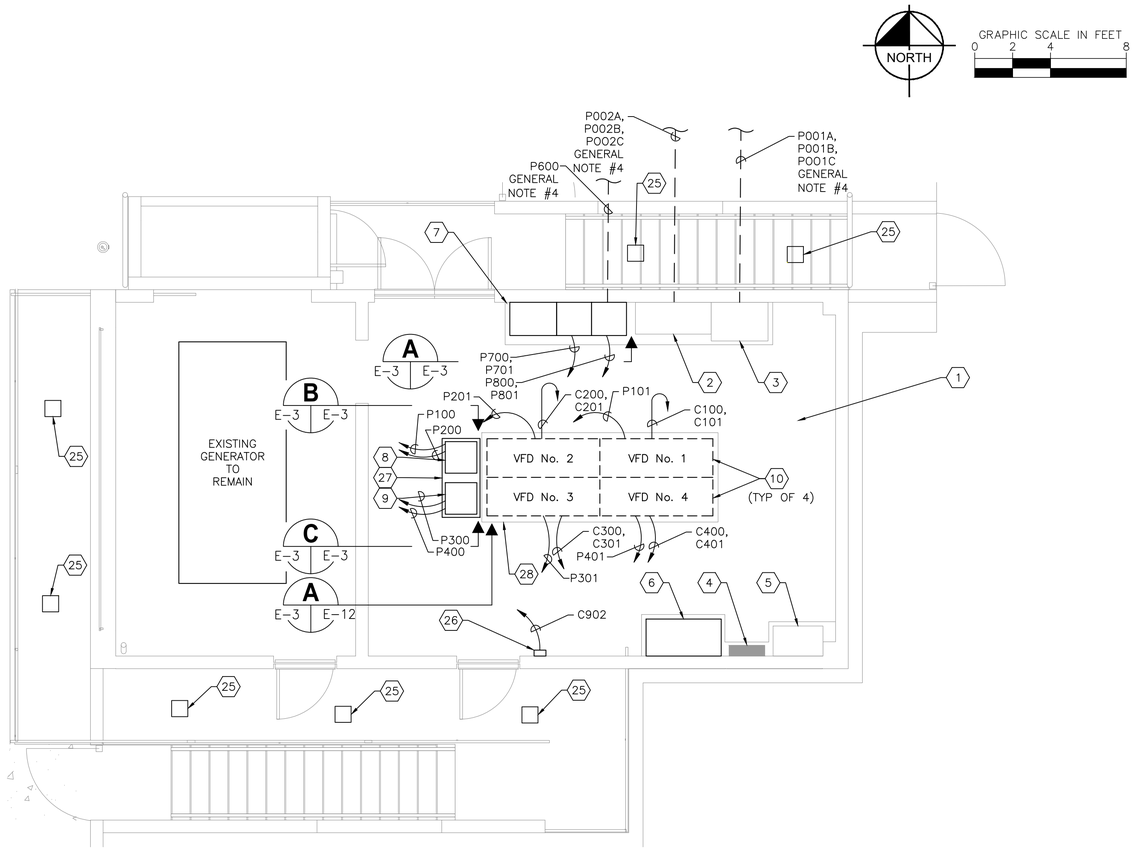

ELECTRICAL ROOM PLAN

SCALE: 1" = 4'-0"

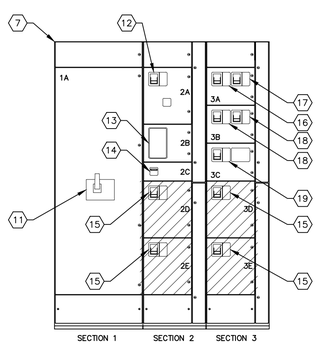

MCC-1 ELEVATION A

SCALE: NOT TO SCALE E-3 E-3

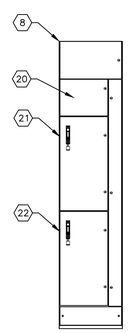

NEW MCC SECTION ELEVATION B

SCALE: NOT TO SCALE E-3 E-3

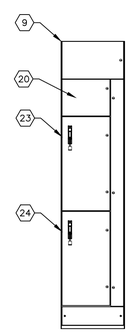

NEW MCC SECTION ELEVATION C

SCALE: NOT TO SCALE E-3 E-3

KEYED NOTES:

1. EXISTING ELECTRICAL ROOM.
2. EXISTING AUTOMATIC TRANSFER SWITCH. REFER TO ONE LINE DIAGRAM ON SHEET E-6.
3. EXISTING MAIN CIRCUIT BREAKER. NEW SERVICE ENTRANCE FEEDERS TO BE PROVIDED. REFER TO SHEETS E-2 AND E-6.
4. EXISTING LIGHTING PANEL 'LP-1'. REFER TO PANEL SCHEDULE AND OTHER DRAWINGS FOR WORK REQUIRED.
5. EXISTING 480-120/208v, 30 KVA TRANSFORMER. NO WORK REQUIRED.
6. EXISTING MASTER PUMP STATION CONTROL PANEL 'MPCP'. REFER TO OTHER SHEETS FOR NEW CONDUIT CONDUCTORS REQUIRED.
7. EXISTING MOTOR CONTROL CENTER 'MCC-1'. CONTRACTOR TO INSTALL NEW 800A, 3-POLE CIRCUIT BREAKERS TO FEED MCC SECTION 'A' AND MCC SECTION 'B' (KEYED NOTES #8 AND #9). REFER ALSO TO SHEET E-6. REFER ALSO TO SPECIFICATION SECTION 16445A.
8. CONTRACTOR TO PROVIDE AND INSTALL NEW 800A, MOTOR CONTROL SECTION 'A'. REFER ALSO TO SHEET E-6 AND SPECIFICATION SECTION 16445.
9. CONTRACTOR TO PROVIDE AND INSTALL NEW 800A, MOTOR CONTROL SECTION 'B'. REFER ALSO TO SHEET E-6 AND SPECIFICATION SECTION 16445.
10. EXISTING 150 HP VFD TO BE REPLACED WITH NEW 480V, 3-PHASE, 250 HP VFD.
11. EXISTING 1000 AMP, 480V, 3-POLE MAIN CIRCUIT BREAKER. NO WORK REQUIRED.
12. 30A, 3-POLE CIRCUIT BREAKER FOR T.V.S.S. TO REMAIN.
13. EXISTING METERING TO REMAIN.
14. EXISTING CIRCUIT BREAKER FOR TRANSFORMER 'T-2' TO REMAIN.
15. EXISTING 250A, 3-POLE CIRCUIT BREAKER TO BE REMOVED AND REPLACED WITH 800A, 3-POLE CIRCUIT BREAKER. REFER TO SHEET E-6 AND SPECIFICATION SECTION 16455A.
16. EXISTING 20A, 3-POLE CIRCUIT BREAKER FOR GENERATOR JACKET WATER HEATER. FEEDER FOR GENERATOR JACKET WATER HEATER TO BE REMOVED. CIRCUIT BREAKER SHALL REMAIN AS A SPARE.
17. EXISTING 20A, 480V, 3-POLE CIRCUIT BREAKER FOR ODOR CONTROL PANEL. NEW ODOR CONTROL UNIT WILL BE PROVIDED UNDER THIS CONTRACT. THEREFORE, A NEW ODOR CONTROL FEEDER WILL BE INSTALLED.
18. EXISTING SPARE CIRCUIT BREAKER TO REMAIN.
19. EXISTING SPARE SIZE 1, 3-POLE STARTER TO REMAIN.
20. PROVIDE 800A MAIN LUGS ONLY COMPARTMENT. LUGS SHALL ACCOMMODATE #600 kcmil COPPER CONDUCTORS.
21. PROVIDE AND INSTALL 400 AMP FRAME, 400 AMP TRIP, 480V, 3-POLE CIRCUIT BREAKER FOR WASTEWATER PUMP No. 1 (VIA VFD No. 1).
22. PROVIDE AND INSTALL 400 AMP FRAME, 400 AMP TRIP, 480V, 3-POLE CIRCUIT BREAKER FOR WASTEWATER PUMP No. 2 (VIA VFD No. 2).
23. PROVIDE AND INSTALL 400 AMP FRAME, 400 AMP TRIP, 480V, 3-POLE CIRCUIT BREAKER FOR WASTEWATER PUMP No. 3 (VIA VFD No. 3).
24. PROVIDE AND INSTALL 400 AMP FRAME, 400 AMP TRIP, 480V, 3-POLE CIRCUIT BREAKER FOR WASTEWATER PUMP No. 4 (VIA VFD No. 4).
25. CONTRACTOR TO REMOVE EXISTING RECESSED LIGHTING FIXTURE AND REPLACE WITH SURFACE MOUNTED LED FIGHT FIXTURE TYPE 'D' REFER TO SHEET E-4 FOR CANOPY LIGHTING CANOPY PLAN. CONTRACTOR TO UTILIZE EXISTING CIRCUIT 6 FROM LP-1 AND EXISTING SWITCHING. PROVIDE NEW CONDUCTORS AND FIXTURE CONNECTIONS AS NECESSARY.
26. PROPOSED EMERGENCY GENERATOR SHUTDOWN PUSHBUTTON STATION No. 1. CONTRACTOR TO COORDINATE PROPOSED LOCATION WITH CITY OF ST. PETE BEACH.
27. EXACT LOCATION OF NEW MCC'S IS DEPENDENT ON NOTE #28 BELOW. PROVIDE CONCRETE HOUSEKEEPING PAD. PAD TO BE SAME HEIGHT AS VFD HOUSEKEEPING PAD. PROVIDE PAD WITH 45° CHAMFER.
28. THE DIMENSIONS OF THE EXISTING VFD'S ARE APPROXIMATELY 70" WIDE X 24" DEEP. THE NEW VFD'S TO BE INSTALLED ARE 48" WIDE BY 30" DEEP. THE CONTRACTOR SHALL MAKE ALL MODIFICATIONS NECESSARY TO ACCOMMODATE THE SIZE OF THE NEW DRIVES. THE MANUFACTURER'S SPECIFICATIONS CALL FOR A MINIMUM OF 2" BETWEEN THE VFD'S. THE CONTRACTOR SHALL MAKE THE MODIFICATIONS AS NECESSARY TO ACCOMMODATE THE NEW VFD DIMENSIONS. THIS WOULD INCLUDE BOTH MODIFICATIONS TO THE HOUSEKEEPING PAD, AS WELL AS, PROVIDING A NEW STRUCTURAL EXTENSION TO REPLACE THE EXISTING IF NECESSARY. REFER TO THE DETAIL ON SHEET E-12 FOR MORE INFORMATION.

GENERAL NOTES:

1. FOR CANOPY PHOTOMETRIC LIGHTING PLAN REFER TO SHEET E-4.
2. REFER TO SHEET E-9 FOR FIXTURE SCHEDULE.
3. CONTRACTOR TO COORDINATE WITH CITY'S SCADA VENDOR FOR TRANSDUCERS AND SCADA IMPLEMENTATION.
4. REFER ALSO TO CONDUIT NOTES ON SHEET E-2.

No.	Revisions	Date	By

Kimley»Horn
© 2024 KIMLEY-HORN AND ASSOCIATES, INC.
200 CENTRAL AVE, SUITE 600
ST. PETERSBURG, FL 33701
P: 727 547 3999
WWW.KIMLEY-HORN.COM REGISTRY NO. 35106

DESIGN ENGINEER: TIMOTHY THOMAS, P.E.
FL LICENSE NUMBER 47079
DATE:

SCALE: AS NOTED
DESIGN: TDT
DRAWN: JLT
CHECKED: GLW

ELECTRICAL ROOM PLAN

CITY OF ST. PETE BEACH
PUMP STATION 1 REHABILITATION
PINELLAS COUNY FLORIDA

DATE: AUGUST 2024
PROJECT NO. 148404075
SHEET NUMBER E-3

THOMAS ENGINEERING
777 S. Harbour Island Blvd, STE 350, TAMPA, FL 33602
813.227.9190
Certificate of Authorization No. 00031028

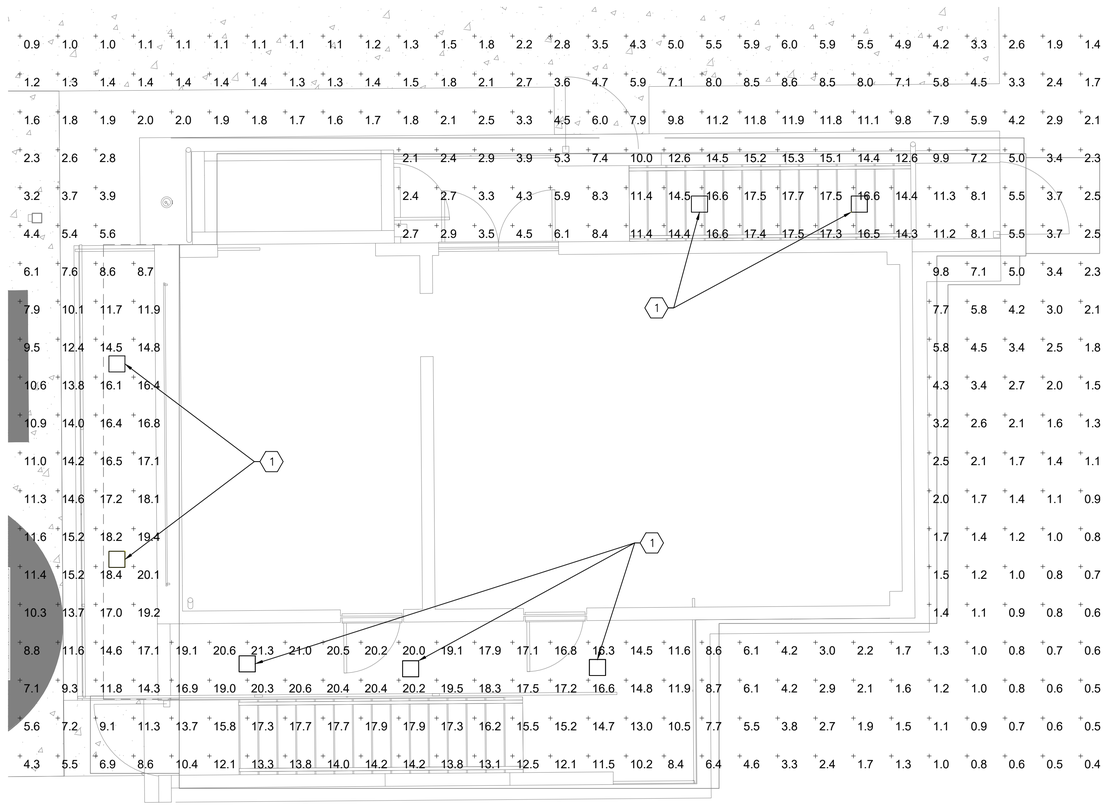

CANOPY LIGHTING PHOTOMETRIC PLAN

SCALE: 1" = 4'-0"

NORTH

GRAPHIC SCALE IN FEET
0 2 4 8

KEYED NOTES:

1. PROPOSED CANOPY FIXTURE TYPE 'D' (TYPICAL).

GENERAL NOTES:

1. THE CANOPY PHOTOMETRIC PLAN DOES NOT INCLUDE THE LIGHTING CONTRIBUTION FROM THE SITE LIGHTS SHOWN ON SHEET E-5.
2. REFER TO SHEET E-9 FOR FIXTURE SCHEDULE.

No.	Revisions	Date	By

Kimley»Horn

© 2024 KIMLEY-HORN AND ASSOCIATES, INC.
200 CENTRAL AVE, SUITE 600
ST. PETERSBURG, FL 33701
P: 727 547 3999
WWW.KIMLEY-HORN.COM REGISTRY NO. 35106

DESIGN ENGINEER:
TIMOTHY THOMAS, P.E.
FL LICENSE NUMBER 47079
DATE:

SCALE: AS NOTED
DESIGN: TDT
DRAWN: JLT
CHECKED: GLW

CANOPY LIGHTING PHOTOMETRIC PLAN

CITY OF ST. PETE BEACH
PUMP STATION 1 REHABILITATION
PINELLAS COUNY FLORIDA

DATE: AUGUST 2024

PROJECT NO. 148404075

SHEET NUMBER E-4

THOMAS ENGINEERING
777 S. Harbour Island Blvd, STE 350, TAMPA, FL 33602
813.227.9190
Certificate of Authorization No. 00031028

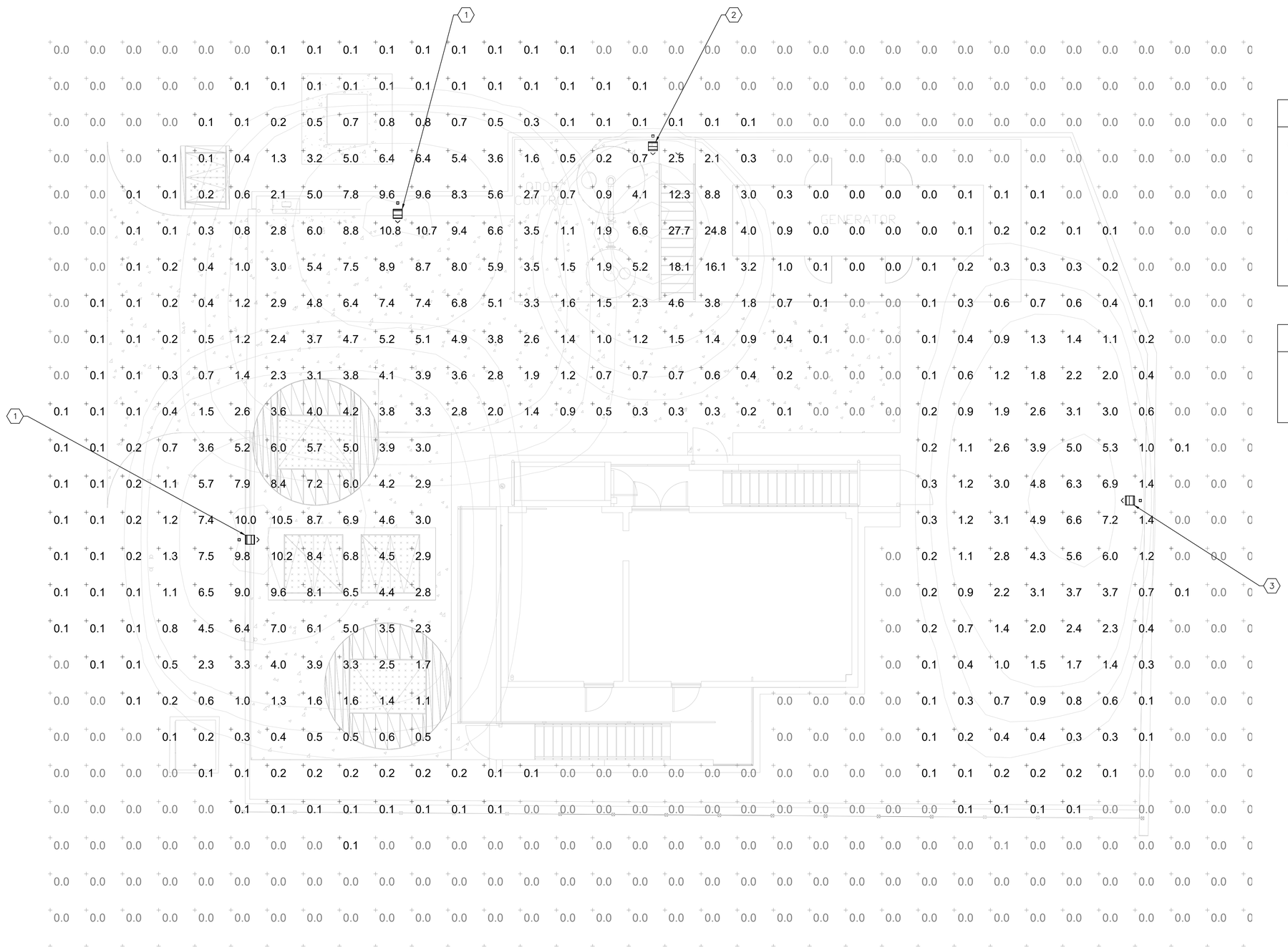

SITE LIGHTING PHOTOMETRIC PLAN

SCALE: 1" = 6'-0"

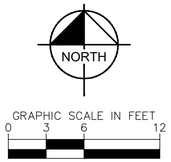

KEYED NOTES:

1. PROPOSED POLE-MOUNTED FIXTURE TYPE 'A' (DSXF1 LED P2 40K WFL). CONTRACTOR TO FIELD ADJUST TILT AS REQUIRED. INITIAL TILT ASSUMED TO BE 15°.
2. PROPOSED POLE-MOUNTED FIXTURE TYPE 'B' (DSXF1 LED P1 40K MSP). CONTRACTOR TO FIELD ADJUST TILT AS REQUIRED. INITIAL TILT ASSUMED TO BE 30°.
3. PROPOSED POLE-MOUNTED FIXTURE TYPE 'C' (DSXF1 LED P1 40K HMF). CONTRACTOR TO FIELD ADJUST TILT AS REQUIRED. INITIAL TILT ASSUMED TO BE 25°.

GENERAL NOTES:

1. SITE PHOTOMETRIC PLAN DOES NOT INCLUDE THE LIGHTING CONTRIBUTION FROM THE CANOPY LIGHTS SHOWN ON SHEET E-4.
2. REFER TO SHEET E-9 FOR FIXTURE SCHEDULE.

No.	Revisions	Date	By

Kimley»Horn
© 2024 KIMLEY-HORN AND ASSOCIATES, INC.
200 CENTRAL AVE, SUITE 600
ST. PETERSBURG, FL 33701
P: 727 547 3999
WWW.KIMLEY-HORN.COM REGISTRY NO. 35106

DESIGN ENGINEER: TIMOTHY THOMAS, P.E.
FL LICENSE NUMBER 47079
DATE:

SCALE: AS NOTED
DESIGN: TDT
DRAWN: JLT
CHECKED: GLW

SITE LIGHTING PHOTOMETRIC PLAN

CITY OF ST. PETE BEACH
PUMP STATION 1 REHABILITATION
PINELLAS COUNY FLORIDA

DATE: AUGUST 2024

PROJECT NO. 148404075

SHEET NUMBER E-5

THOMAS ENGINEERING
777 S. Harbour Island Blvd, STE 350, TAMPA, FL 33602
813.227.9190
Certificate of Authorization No. 00031028

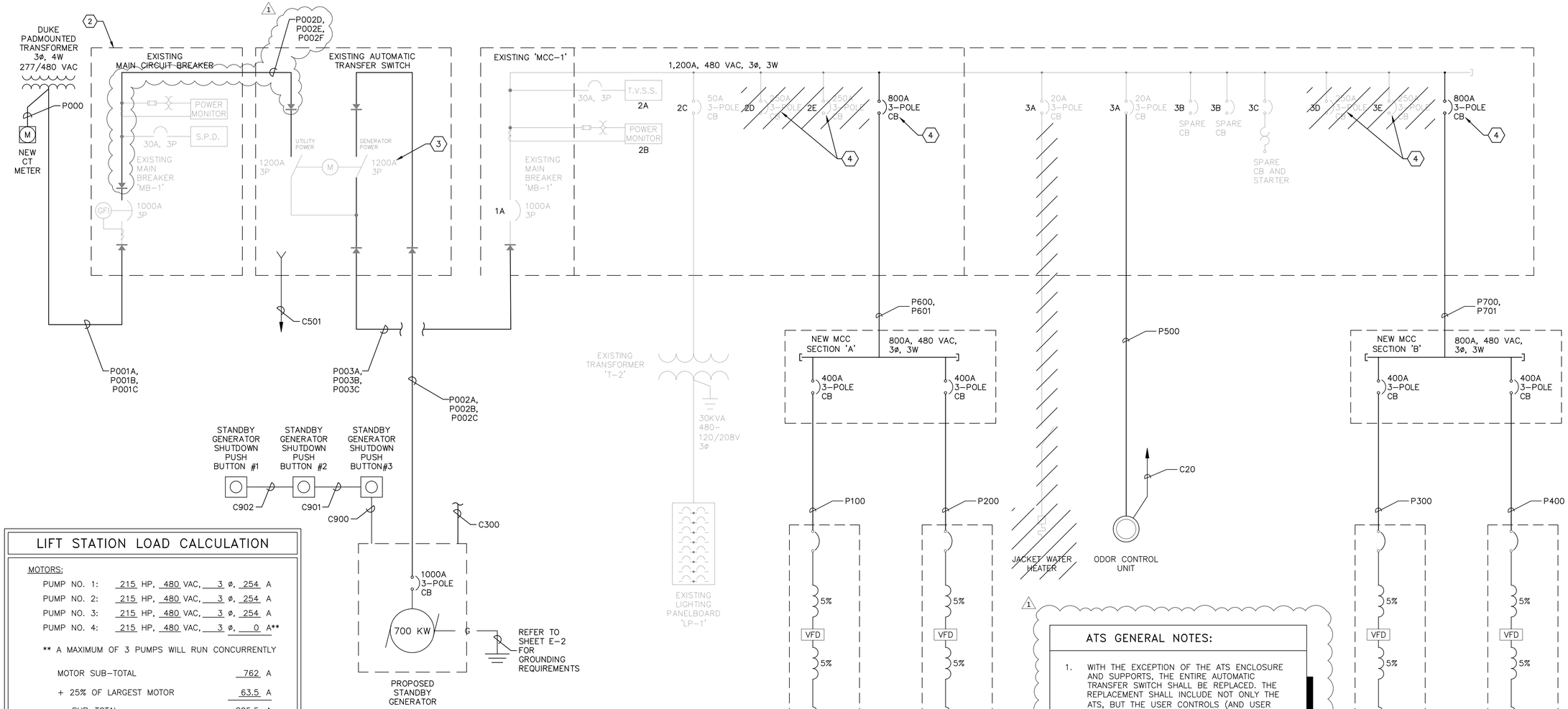

ELECTRICAL ONE LINE DIAGRAM

LIFT STATION LOAD CALCULATION

MOTORS:

PUMP NO. 1:	215 HP,	480 VAC,	3 ø,	254 A		
PUMP NO. 2:	215 HP,	480 VAC,	3 ø,	254 A		
PUMP NO. 3:	215 HP,	480 VAC,	3 ø,	254 A		
PUMP NO. 4:	215 HP,	480 VAC,	3 ø,	0 A**		

** A MAXIMUM OF 3 PUMPS WILL RUN CONCURRENTLY

MOTOR SUB-TOTAL	762 A
+ 25% OF LARGEST MOTOR	63.5 A
SUB-TOTAL	825.5 A
AUXILIARY EQUIPMENT	60.0 A
TOTAL MAXIMUM PHASE AMPERES	885.5 A

SERVICE SIZE:

1000 A, 480 VAC, 3 ø, 4 - WIRE MINIMUM.

SHORT CIRCUIT CALCULATIONS

AVAILABLE SHORT-CIRCUIT CURRENT AT 480V UTILITY SERVICE IS 6,766 AMPERES.
CONTRACTOR TO CONFIRM WITH DUKE

UTILITY SERVICE: 480/277, 3 PH, PAD-MOUNTED TRANSFORMERS
AVAILABLE FAULT CURRENT AT SECONDARY SIDE OF DUKE'S TRANSFORMERS: 30,070 AMP RMS SYM.
SERVICE CONDUCTOR LENGTH: 120 FEET
SERVICE CONDUCTOR SIZE: 500MCM (3 PARALLEL RUNS).

ISCA AT LINE SIDE OF MCB:

$$ISCA = \left[\frac{1}{1 + \left[\frac{(1.73)(120)(30{,}070)}{(64{,}500)(480)} \right]} \right] * 30{,}070 = 10{,}850A$$

KEYED NOTES:

1. PROVIDE AND INSTALL NEW WET WELL JUNCTION BOX.
2. PROVIDE AND INSTALL EYS SEAL.
3. EXISTING ATS. EXISTING ATS ENCLOSURE TO REMAIN. ALL EXISTING INTERNAL COMPONENTS AND EXISTING CONTROL COMPONENTS LOCATED ON THE ENCLOSURE DOOR SHALL BE REMOVED AND REPLACED. REFER ALSO TO ATS GENERAL NOTES ON THIS SHEET.
4. EXISTING VFD 250 AMP CIRCUIT BREAKER TO BE REPLACED WITH NEW 400 AMP CIRCUIT BREAKER.

ATS GENERAL NOTES:

1. WITH THE EXCEPTION OF THE ATS ENCLOSURE AND SUPPORTS, THE ENTIRE AUTOMATIC TRANSFER SWITCH SHALL BE REPLACED. THE REPLACEMENT SHALL INCLUDE NOT ONLY THE ATS, BUT THE USER CONTROLS (AND USER INTERFACE), USER CONTROLS AND INDICATORS, WIRING HARNESSES, ETC.. CONTRACTOR SHALL REMOVE ALL EXISTING DEVICES ON THE FACE OF THE EXISTING ENCLOSURE DOOR. PROVIDE 1/4" ALUMINUM PLATES OVER ALL HOLES CREATED BY REMOVAL OF EXISTING DEVICES AND INSTALL NEW CONTROL AND USER INTERFACES ON EXISTING ATS ENCLOSURE DOOR. COORDINATE ANY DESIRED DEVICE LOCATIONS WITH THE CITY.
2. THE CONTRACTOR SHALL PROVIDE LUGS AS REQUIRED TO ACCOMMODATE THE NEW CONDUCTORS TO BE INSTALLED.
3. THE CONTRACTOR SHALL CONNECT ALL EQUIPMENT GROUND CONDUCTORS.
4. CONTRACTOR TO REMOVE ALL EXISTING CONTROL CONDUCTORS FROM EXISTING GENERATOR (TO BE REMOVED) TO EXISTING ATS (TO BE REMOVED). REFER TO OTHER SHEETS FOR CONTROL WIRING REQUIRED BETWEEN THE NEW ATS AND THE NEW GENERATOR.
5. REFER TO SPECIFICATION SECTION 16495 FOR ATS, CONTROLS AND USER INTERFACE REQUIRED.
6. CONTRACTOR PROVIDE NEW NEUTRAL CONDUCTORS TO THE NEW ATS AS INDICATED IN THE CONDUIT AND CABLE SCHEDULE.

THOMAS ENGINEERING
777 S. Harbour Island Blvd, STE 350, TAMPA, FL 33602
813.227.9190
Certificate of Authorization No. 00031028

No.	Revisions	Date	By
1	IFC REVISION NO.1	08/14/24	TDT

Kimley»Horn
© 2024 KIMLEY-HORN AND ASSOCIATES, INC.
200 CENTRAL AVE, SUITE 600
ST. PETERSBURG, FL 33701
P: 727.547.3999
WWW.KIMLEY-HORN.COM REGISTRY NO. 35106

DESIGN ENGINEER: TIMOTHY THOMAS, P.E.
FL LICENSE NUMBER 47079
DATE:

SCALE: AS NOTED
DESIGN: TDT
DRAWN: JLT
CHECKED: GLW

ELECTRICAL ONE LINE DIAGRAM

CITY OF ST. PETE BEACH
PUMP STATION 1 REHABILITATION
PINELLAS COUNTY FLORIDA

DATE: AUGUST 2024
PROJECT NO. 148404075
SHEET NUMBER E-6

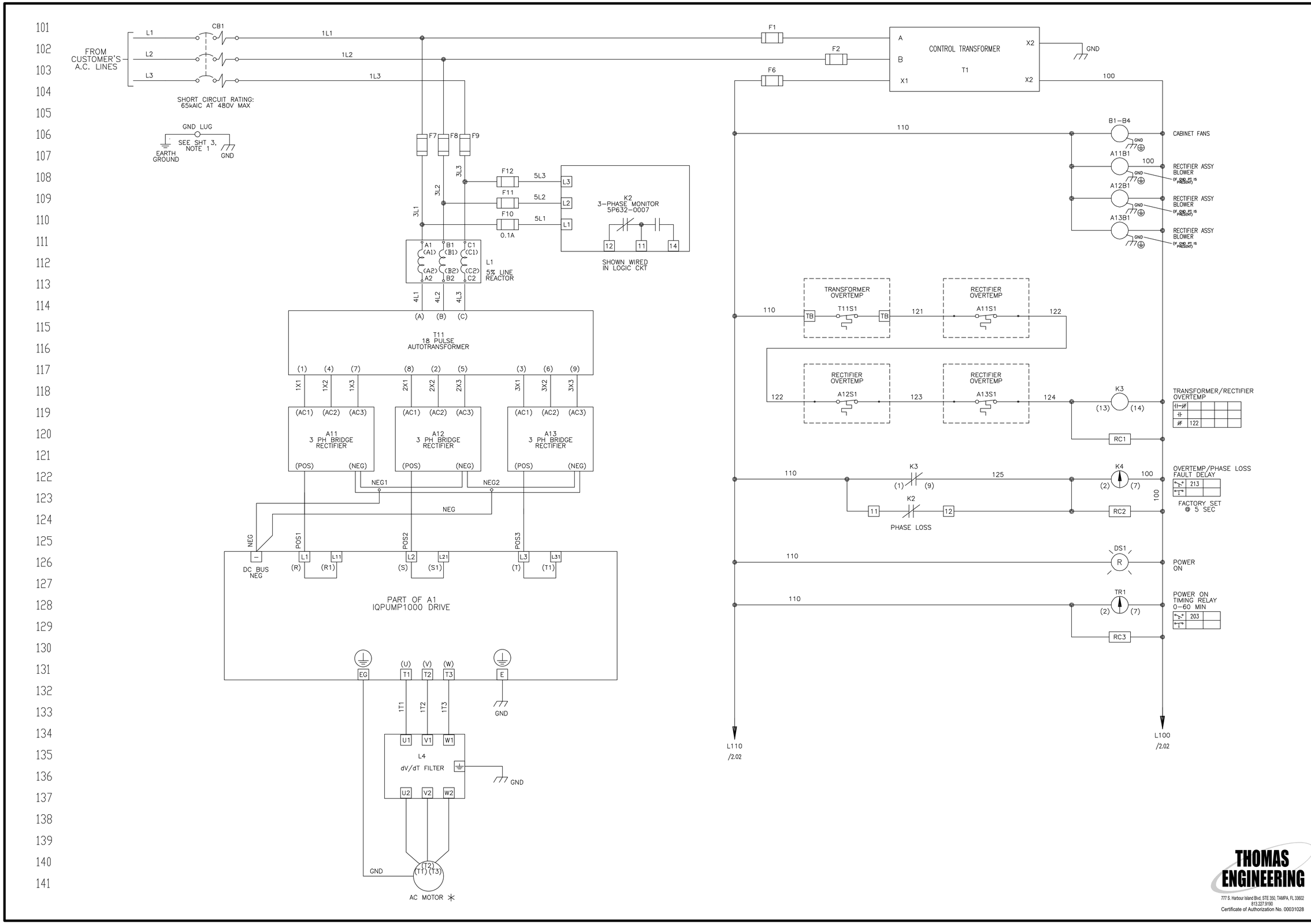

No.	Revisions	Date	By

Kimley»Horn

© 2024 KIMLEY-HORN AND ASSOCIATES, INC.
200 CENTRAL AVE., SUITE 600
ST. PETERSBURG, FL 33701
P: 727 547 3999
WWW.KIMLEY-HORN.COM REGISTRY NO. 35106

DESIGN ENGINEER: TIMOTHY THOMAS, P.E.
FL LICENSE NUMBER 47079

SCALE: AS NOTED
DESIGN: TDT
DRAWN: JLT
CHECKED: GLW
DATE:

VFD SCHEMATICS

CITY OF ST. PETE BEACH
PUMP STATION 1
REHABILITATION
PINELLAS COUNY FLORIDA

DATE: AUGUST 2024

PROJECT NO. 148404075

SHEET NUMBER E-7

THOMAS ENGINEERING
777 S. Harbour Island Blvd, STE 350, TAMPA, FL 33602
813.227.5190
Certificate of Authorization No. 00031028

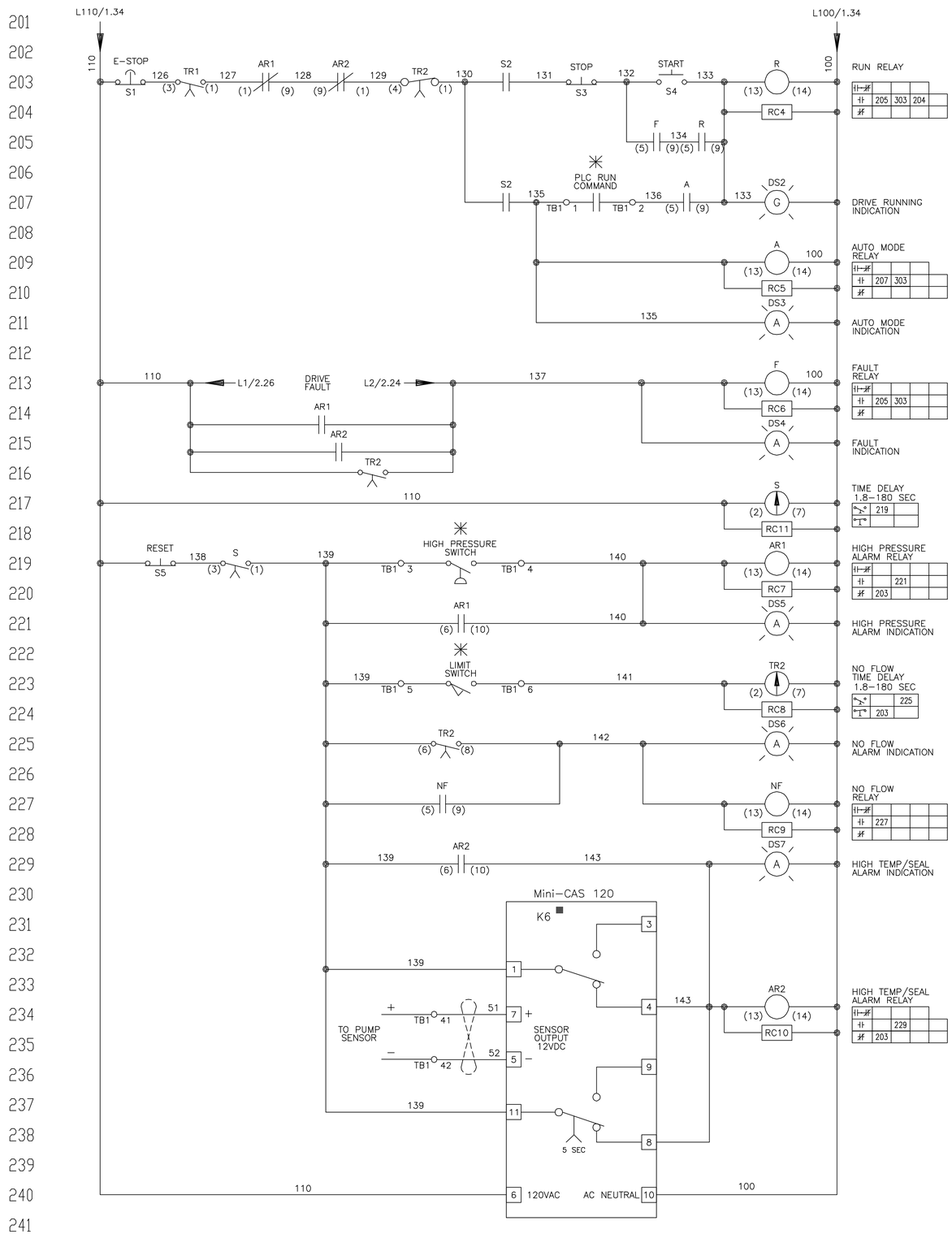

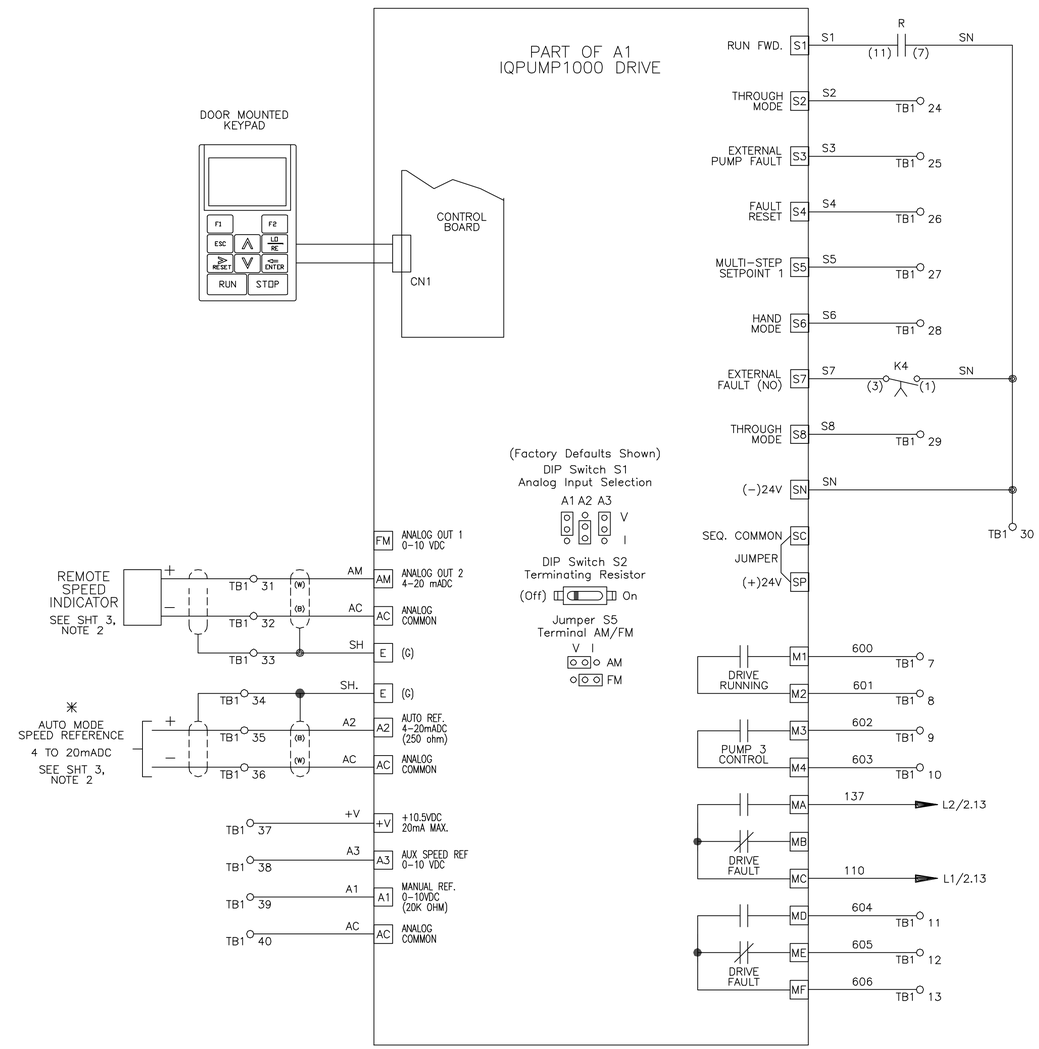

CONTACT SEQUENCE CHART FOR S2
X – INDICATES CONTACT CLOSED

CONTACT	POSITION			MANUF. LOCATION /TYPE
	HAND	OFF*	AUTO	
1	X			1RO
2			X	1LO

• SCHEMATIC SHOWS THIS POSITION.

■ SUPPLIED BY CUSTOMER. MOUNTED & WIRED BY YASKAWA.
✳ – INDICATES COMPONENTS NOT SUPPLIED BY YASKAWA.
—— – INDICATES CUSTOMER WIRING.

THOMAS ENGINEERING
777 S. Harbour Island Blvd, STE 350, TAMPA, FL 33602
813.227.9190
Certificate of Authorization No. 00031028

No.	Revisions	Date	By

Kimley»Horn
© 2024 KIMLEY-HORN AND ASSOCIATES, INC.
200 CENTRAL AVE., SUITE 600
ST. PETERSBURG, FL 33701
P: 727 547 3999
WWW.KIMLEY-HORN.COM REGISTRY NO. 35106

DESIGN ENGINEER: TIMOTHY THOMAS, P.E.
FL LICENSE NUMBER 47079
DATE:

SCALE: AS NOTED
DESIGN: TDT
DRAWN: JLT
CHECKED: GLW

VFD SCHEMATICS

CITY OF ST. PETE BEACH
PUMP STATION 1 REHABILITATION
PINELLAS COUNY FLORIDA

DATE: AUGUST 2024
PROJECT NO. 148404075
SHEET NUMBER E-8

EXISTING PANEL 'LP-1' SCHEDULE

PANEL 'LP-1' ; SQUARE D CO. TYPE NQOD ; 120/208 VOLTS, 3ø, 4W ; 100 AMP MAIN CIRCUIT BREAKER ; 10K AIC RATING ; SURFACE ENCLOSURE TOP AT 5'-6" AFF

EQUIPMENT SERVED	CIRCUIT BREAKER			KVA/PHASE			CIRC.	CIRC.	KVA/PHASE			CIRCUIT BREAKER			EQUIPMENT SERVED
	POLE	AMPS	FRAME	A	B	C	NO.	NO.	A	B	C	POLE	AMPS	FRAME	
MPCP (1)	1	20	QOB	1.0			1	2	0.5			1	20	QOB	GENERATOR ROOM LIGHTING (1)
BATTERY CHARGER (1)	1	20	QOB		0.6		3	4		1.2		1	20	QOB	ELECTRICAL ROOM LIGHTING (1)
DAY TANK PANEL (2)	1	20	QOB			1.0	5	6			0.2	1	20	QOB	WALKWAY LIGHTING (1)
EXHAUST PLENUM LIGHT (1)	1	20	QOB	0.2			7	8	0.8			1	20	QOB	SITE LIGHTING (1)
AUTO-DIALER (1)	1	20	QOB		0.4		9	10		0.6		1	20	QOB	ELECTRICAL ROOM RECEPTS (1)
FUEL STORAGE LEAK/LEVEL (2)	1	20	QOB			0.2	11	12			0.6	1	20	QOB	GENERATOR ROOM RECEPTS (1)
EMER EYEWASH SHOWER (1)	1	20	QOB	0.2			13	14	0.6			1	20	QOB	OUTDOOR RECEPTACLES (1)
AHU-1 (1)	2	60	QOB		0.7		15	16		.		1	20	QOB	AIT-1075-1 (2)
" "	—	—	—			0.7	17	18			.	1	20	QOB	AIT-1075-2 (2)
ACCU-1 (1)	2	40	QOB	2.8			19	20	0.1			1	20	QOB	LIT-1000-1 (1)
" "	—	—	—		2.8		21	22		0.1		1	20	QOB	LIT-1000-2 (1)
AHU-2 (1)	2	60	QOB			0.7	23	24			.	1	20	QOB	FIT-1020-1 (2)
" "	—	—	—	0.7			25	26	.			1	20	QOB	FIT-1020-2 (2)
ACCU-2 (1)	2	40	QOB		2.8		27	28		0.2		1	20	QOB	OUTDOOR LIGHTING (1)
" "	—	—	—			2.8	29	30			0.7	1	20	QOB	MANHOLE SUMP PUMP (1)
FUEL TRANSFER PUMP PANEL(2)	1	20	QOB	0.9			31	32	0.1			1	20	QOB	FIT-1020-1
EXHAUST FAN (EF-1) (1)	1	20	QOB		0.3		33	34		0.1		1	20	QOB	GENERATOR STRUCTURE FIXTURE
FIRE ALARM CONTROL PANEL(1)	1	20	QOB			0.5	35	36			0.2	1	20	QOB	SITE LIGHTING
GATE OPERATOR	3	15	QOB	0.5			37	38	.			1	20	QOB	SPACE
" "	—	—	—		0.5		39	40		.		1	20	QOB	SPACE
" "	—	—	—			0.5	41	42			.	1	20	QOB	SPACE
	SUB-TOTAL KVA			6.3	8.1	6.4			2.1	2.2	2.2				

TOTAL CONNECTED LOAD = 27.3 KVA

TOTAL DEMAND LOAD = 25.2 KVA

NOTES (*):

(1) INDICATES EXISTING CIRCUIT BREAKER TO REMAIN AND BE REUSED.

(2) INDICATES EXISTING CIRCUIT BREAKER TO BECOME SPARE.

(3) INDICATES EXISTING CIRCUIT BREAKER TO REMAIN AND BE REUSED FOR NEW EQUIPMENT TO BE PROVIDED.

LIGHTING FIXTURE SCHEDULE

TYPE	MANUFACTURER	CATALOG NUMBER	LAMP(S)	VOLTS	MOUNTING	REMARKS
A	LITHONIA	DSXF1 LED P2 40K WFL MVOLT IS DDBXD	(1) 42W LED	120	POLE – LITHONIA SSA16xxT20ULNECFBCDDBXD WHERE xx INDICATES WALL THICKNESS PER AREA LIGHT DETAIL ON E-12	MOUNT 16'-0" ABOVE GRADE. AIM WITH 15° TILT. PROVIDE ADJUSTABLE SLIPFITTER FOR 2-3/8" O.D. TENNON. FIELD ADJUST TILT AS NECESSARY
B	LITHONIA	DSXF1 LED P1 40K MSP MVOLT IS DDBXD	(1) 21W LED	120	POLE – LITHONIA SSA26xxT20ULNECFBCDDBXD WHERE xx INDICATES WALL THICKNESS PER AREA LIGHT DETAIL ON E-12	MOUNT 26'-0" ABOVE SLAB. AIM WITH 30° TILT. PROVIDE ADJUSTABLE SLIPFITTER FOR 2-3/8" O.D. TENNON. FIELD ADJUST TILT AS NECESSARY
C	LITHONIA	DSXF1 LED P1 40K HMF MVOLT IS DDBXD	(1) 21W LED	120	POLE – LITHONIA SSA16xxT20ULNECFBCDDBXD WHERE xx INDICATES WALL THICKNESS PER AREA LIGHT DETAIL ON E-12	MOUNT 16'-0" ABOVE GRADE. AIM WITH 25° TILT. PROVIDE ADJUSTABLE SLIPFITTER FOR 2-3/8" O.D. TENNON. FIELD ADJUST TILT AS NECESSARY
D	LITHONIA	CNY P0 40K MVOLT	(1) 27W LED	120	CEILING	

THOMAS ENGINEERING
777 S. Harbour Island Blvd, STE 350, TAMPA, FL 33602
813.227.9190
Certificate of Authorization No. 00031028

No.	Revisions	Date	By

Kimley»Horn
© 2024 KIMLEY-HORN AND ASSOCIATES, INC.
200 CENTRAL AVE, SUITE 600
ST. PETERSBURG, FL 33701
P: 727 547 3999
WWW.KIMLEY-HORN.COM REGISTRY NO. 35106

DESIGN ENGINEER: TIMOTHY THOMAS, P.E.
FL LICENSE NUMBER 47079
DATE:

SCALE: AS NOTED
DESIGN: TDT
DRAWN: JLT
CHECKED: GLW

PANEL AND LIGHT FIXTURE SCHEDULES

CITY OF ST. PETE BEACH
PUMP STATION 1 REHABILITATION
PINELLAS COUNY FLORIDA

DATE: AUGUST 2024

PROJECT NO. 148404075

SHEET NUMBER E-9

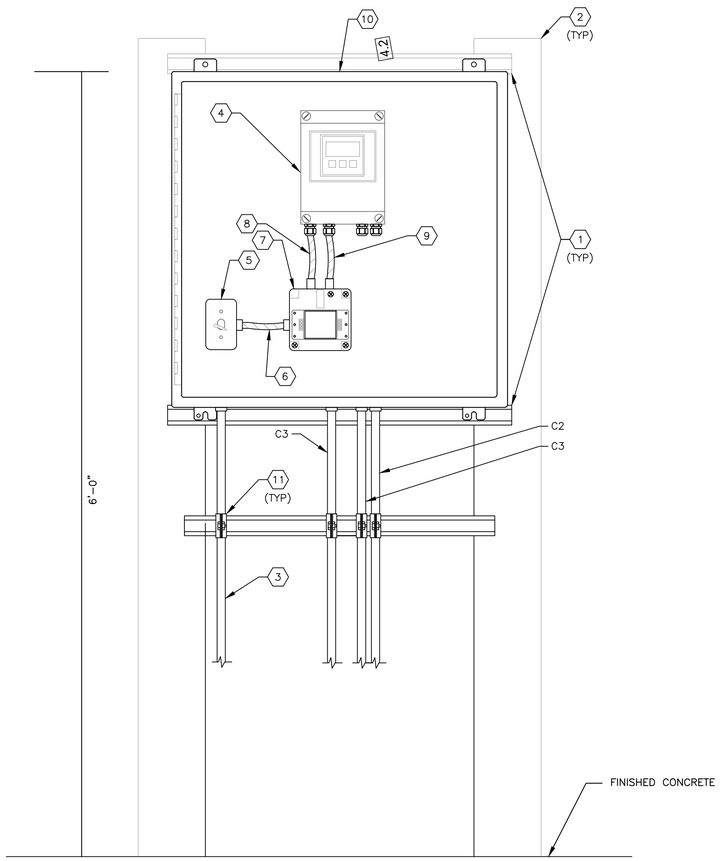

FLOW TRANSMITTER RACK ELEVATION 1

SCALE: NOT TO SCALE

E-2 | E-10

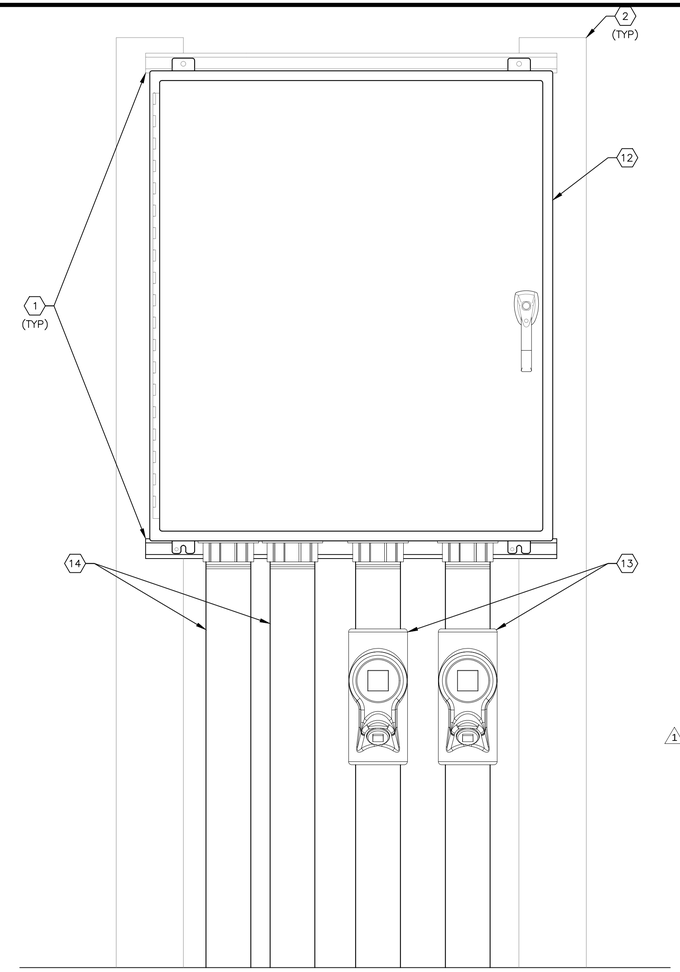

TYPICAL PUMP JNCTION BOX ELEVATION 2

SCALE: NOT TO SCALE

E-2 | E-10

NOTE: ELEVATION SHOWN WITH HINGED DOOR OPEN FOR CLARITY.

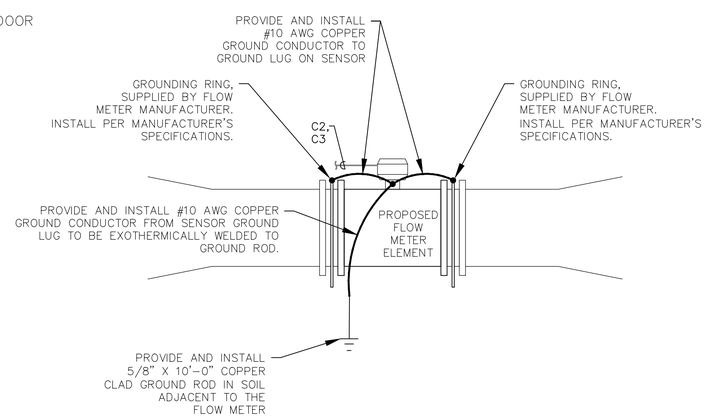

TYPICAL FLOW ELEMENT INSTALLATION DETAIL 3

SCALE: NOT TO SCALE

E-2 | E-10

KEYED NOTES:

1. PROVIDE AND INSTALL 1-5/8" STAINLESS STEEL UNISTRUT (OR EQUAL). BOLTS TO SECURE UNISTRUT SHALL BE INSTALLED COMPLETELY THROUGH CONCRETE POST.
2. PROVIDE AND INSTALL 6" X 6" CONCRETE POST. POST SHALL BE EMBEDDED A MINIMUM OF 3 FEET INTO CONCRETE SLAB/SOIL.
3. PROVIDE AND INSTALL 2-#12 THWN CU + 1-#12 THWN CU GND IN 3/4"C. FROM FLOW METER TRANSMITTER TO PANELBOARD 'LP-1' FOR 120V POWER, CIRCUIT 24.
4. PROVIDE AND INSTALL FLOW METER TRANSMITTER, PROLINE PROMAG W 400. REFER ALSO TO SPECIFICATIONS. PROVIDE 1/4" ALUMINUM PLATE FOR MOUNTING.
5. PROVIDE AND INSTALL 120V, 15A, SINGLE-POLE SWITCH IN WEATHERPROOF FS BOX AS 120V POWER DISCONNECTING MEANS. PROVIDE AND INSTALL SINGLE-GANG WEATHERPROOF SWITCH COVER. BELL #5121-0.
6. PROVIDE AND INSTALL 2-#12 THWN CU + 1-#12 THWN CU GND IN 3/4" FLEXIBLE, SEALTITE CONDUIT TO SURGE PROTECTION DEVICE FOR 120V POWER.
7. PROVIDE AND INSTALL EDCO - SLAC SERIES AC POWER/SIGNAL SURGE PROTECTION DEVICE IN NEMA 4X ENCLOSURE TO PROTECT 120V POWER CIRCUIT AND 4-20mA ANALOG OUTPUT SIGNAL.
8. PROVIDE AND INSTALL 2-#12 THWN CU + 1-#12 THWN CU GND IN 3/4" FLEXIBLE, SEALTITE CONDUIT TO FLOW METER TRANSMITTER FOR 120V POWER.
9. PROVIDE AND INSTALL 2/C-#16 SHIELDED (BELDEN 8719) IN 3/4" FLEXIBLE, SEALTITE CONDUIT. (4-20mA FLOW METER SIGNAL).
10. PROVIDE AND INSTALL 30" X 30" X 8" NEMA 4X, 316 STAINLESS STEEL ENCLOSURE WITH HINGED DOOR AND HANDLE. HAMMOND HW30308S16HK. PROVIDE ALUMINUM BACKPLATE, HAMMOND 18A2727. POWDER COATED WHITE.
11. PROVIDE AND INSTALL ALUMINUM CONDUIT CLAMP.
12. PROVIDE AND INSTALL 42" X 36" X 12" NEMA 4X, 316 STAINLESS STEEL ENCLOSURE WITH HINGED DOOR AND HANDLE. HAMMOND HW423612S16HK. PROVIDE ALUMINUM BACKPLATE, HAMMOND 18A2727. POWDER COATED WHITE. PROVIDE AND INSTALL POWER DISTRIBUTION BLOCK SIZED FOR PUMP POWER CONDUCTORS. MARATHON, BUSSMANN OR EQUAL. BLOCKS SHALL BE SUITABLE FOR COPPER CONDUCTORS. PROVIDE AND INSTALL 600V TERMINAL BLOCKS FOR FLOAT SWITCHES AND XYLEM TEMP/LEAK SENSORS.
13. PROVIDE AND INSTALL 4" EYS SEALS AS REQUIRED.
14. PROVIDE AND INSTALL CONDUIT/CONDUCTORS AS REQUIRED. CONDUIT/CONDUCTORS FOR FLOATS, WET WELL LEVEL TRANSMITTERS AND TEMP/LEAK NOT SHOWN FOR CLARITY. (1)

No.	Revisions	Date	By
1	IFC REVISION NO.1	08/14/24	TDT

Kimley»Horn
© 2024 KIMLEY-HORN AND ASSOCIATES, INC.
200 CENTRAL AVE, SUITE 600
ST. PETERSBURG, FL 33701
P: 727 547 3999
WWW.KIMLEY-HORN.COM REGISTRY NO. 35106

DESIGN ENGINEER: TIMOTHY THOMAS, P.E.
FL LICENSE NUMBER 47079
DATE:

SCALE: AS NOTED
DESIGN: TDT
DRAWN: JLT
CHECKED: GLW

ELECTRICAL DETAILS

CITY OF ST. PETE BEACH
PUMP STATION 1 REHABILITATION
PINELLAS COUNY FLORIDA

DATE: AUGUST 2024
PROJECT NO. 148404075
SHEET NUMBER E-10

THOMAS ENGINEERING
777 S. Harbour Island Blvd, STE 350, TAMPA, FL 33602
813.227.5190
Certificate of Authorization No. 00031028

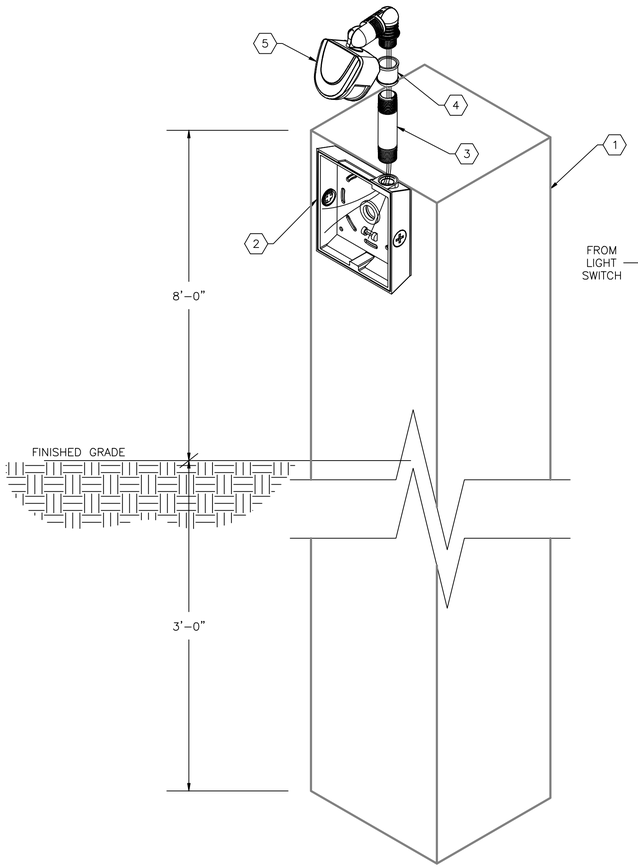

MOTION SENSOR DETAIL 1

SCALE: NOT TO SCALE

E–2 | E–11

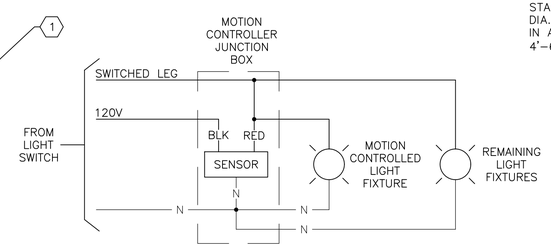

MOTION SENSOR WIRING

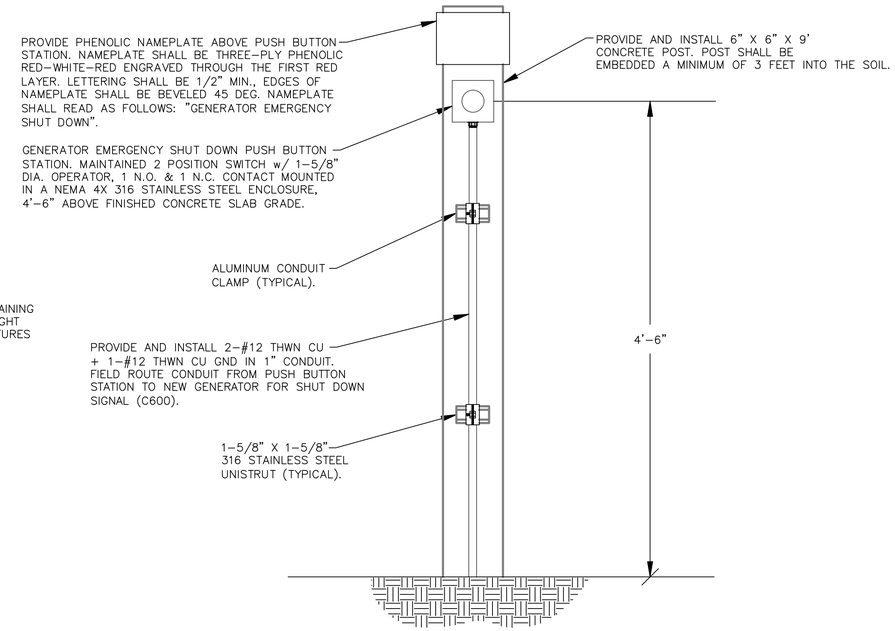

EMERGENCY SHUTOFF PUSH BUTTON ELEVATION 1

SCALE : NOT TO SCALE

E–2 | E–11

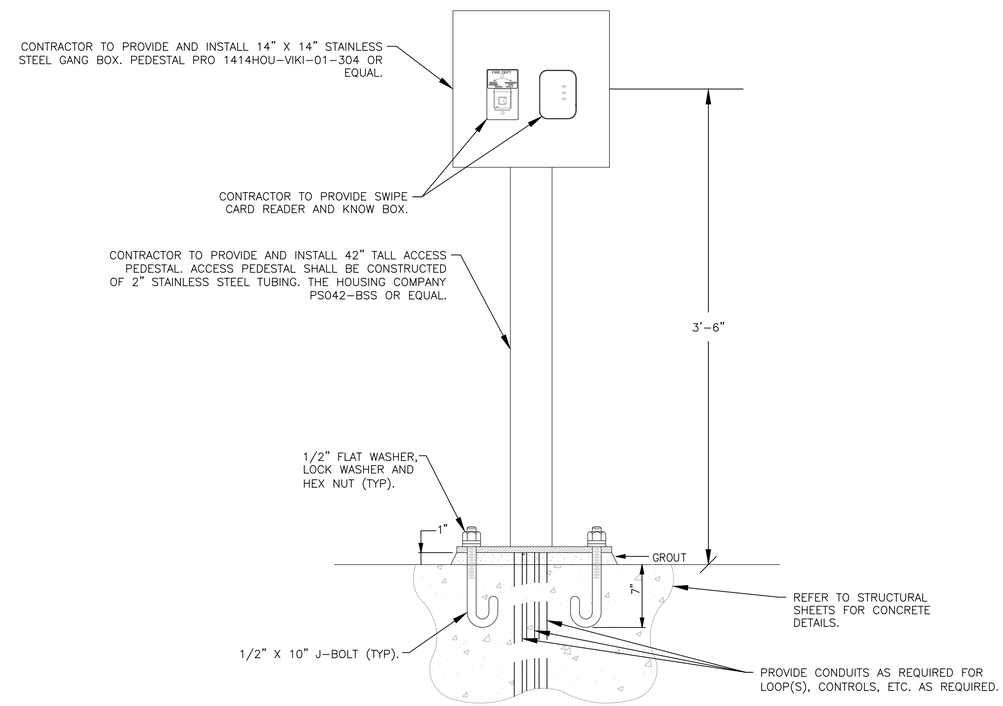

GATE PEDESTAL DETAIL 2

SCALE : NOT TO SCALE

E–2 | E–11

KEYED NOTES:

1. PROVIDE AND INSTALL 6" X 6" X 11' CONCRETE POST. POST SHALL BE EMBEDDED A MINIMUM OF 3 FEET INTO THE SOIL.
2. PROVIDE AND INSTALL WEATHERPROOF CAST ALUMINUM JUNCTION BOX WITH STAINLESS STEEL COVER AND SCREWS.
3. PROVIDE AND INSTALL 1/2" RIGID ALUMINUM CONDUIT NIPPLE.
4. PROVIDE AND INSTALL 1/2" RIGID ALUMINUM COUPLING.
5. PROVIDE AND INSTALL MOTION SENSOR – WAC LIGHTING MODEL #MS–120. ADJUST AIMING IN FIELD PER MANUFACTURER'S DIRECTIONS. MOUNT MOTION SENSOR APPROXIMATELY 8'–0" ABOVE GRADE.

No.	Revisions	Date	By

Kimley»Horn

© 2024 KIMLEY-HORN AND ASSOCIATES, INC.
200 CENTRAL AVE, SUITE 600
ST. PETERSBURG, FL 33701
P: 727 547 3999
WWW.KIMLEY-HORN.COM REGISTRY NO. 35106

DESIGN ENGINEER:
TIMOTHY THOMAS, P.E.
FL LICENSE NUMBER 47079
DATE:

SCALE: AS NOTED
DESIGN: TDT
DRAWN: JLT
CHECKED: GLW

ELECTRICAL DETAILS

CITY OF ST. PETE BEACH
PUMP STATION 1 REHABILITATION
PINELLAS COUNY FLORIDA

DATE: AUGUST 2024

PROJECT NO. 148404075

SHEET NUMBER E-11

THOMAS ENGINEERING
777 S. Harbour Island Blvd, STE 350, TAMPA, FL 33602
813.227.9190
Certificate of Authorization No. 00031028

EXISTING VFD DETAIL

SCALE : NOT TO SCALE

A E-3 | E-12

KEYED NOTES:

1. EXISTING 70" WIDE X 24" DEEP VFD. TYPICAL OF 4.
2. EXISTING HOUSEKEEPING PAD.
3. EXISTING STRUCTURAL EXTENSION. THE EXISTING VFD'S ARE REPLACEMENTS FOR THE VFD'S ORIGINALLY INSTALLED AT THE STATION. WHEN THE EXISTING VFD' WERE INSTALLED THE FOOTPRINT (AND CONDUIT WINDOWS) OF THE EXISTING VFD'S DID NOT ACCOMMODATE THE LOCATION OF THE COUNDUIT STUB-UP'S IN THE FLOOR SLAB. EXTENSIONS WERE FABRICATED TO RAISE THE EXISTING VFD'S IN ORDER TO INSTALL THE REQUIRED CONDUCTORS. BASED ON SHOP DRAWINGS PROVIDED BY THE MANUFACTURER, THE CONTRACTOR SHALL DETERMINE IF THE EXISTING STRUCTURAL EXTENSIONS CAN BE REMOVED, OR IF NEW EXTENSIONS NEED TO BE PROVIDED. TYPICAL FOR EACH VFD.

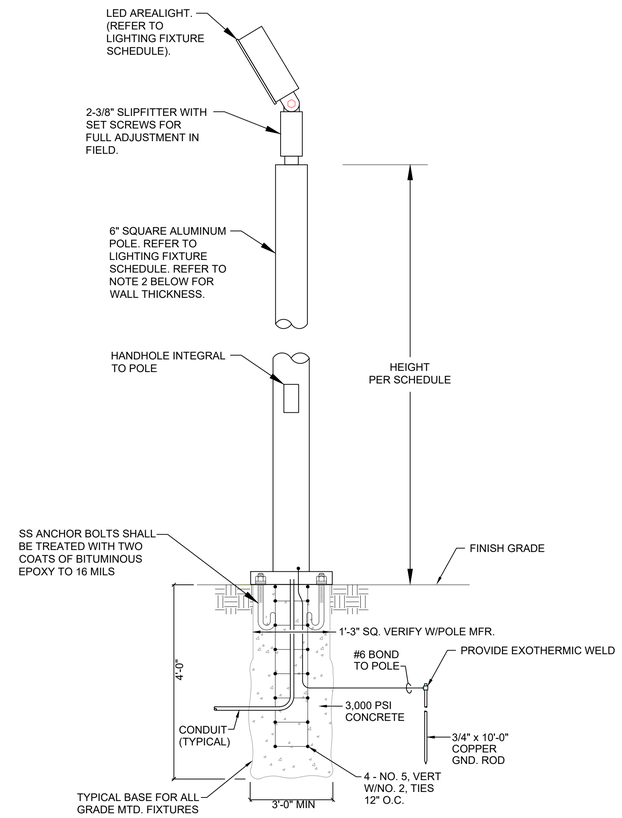

NOTES :

1. LIGHTING FIXTURE SUBMITTAL SHALL INCLUDE FOUNDATION DESIGN SIGNED AND SEALED BY A PROFESSIONAL STRUCTURAL ENGINEER, REGISTERED IN THE STATE OF FLORIDA. FOUNDATION SHALL MEET FEDERAL, STATE AND LOCAL REQUIREMENTS.
2. STRUCTURAL ENGINEER SHALL SELECT APPROPRIATE WALL THICKNESS IN ORDER TO SATISFY WIND LOAD REQUIREMENTS.

TYPICAL AREA LIGHT DETAIL

SCALE: NOT TO SCALE

A E-2 | E-12

THOMAS ENGINEERING
777 S. Harbour Island Blvd, STE 350, TAMPA, FL 33602
813.227.5190
Certificate of Authorization No. 00031028

No.	Revisions	Date	By

Kimley»Horn
© 2024 KIMLEY-HORN AND ASSOCIATES, INC.
200 CENTRAL AVE, SUITE 600
ST. PETERSBURG, FL 33701
P: 727 547 3999
WWW.KIMLEY-HORN.COM REGISTRY NO. 35106

DESIGN ENGINEER:
TIMOTHY THOMAS, P.E.
FL LICENSE NUMBER 47079
DATE:

SCALE: AS NOTED
DESIGN: TDT
DRAWN: JLT
CHECKED: GLW

ELECTRICAL DETAILS

CITY OF ST. PETE BEACH
PUMP STATION 1 REHABILITATION
PINELLAS COUNY FLORIDA

DATE: AUGUST 2024
PROJECT NO. 148404075
SHEET NUMBER E-12

CONDUIT AND CABLE SCHEDULE

CONDUIT No.	QTY/SIZE	NUMER OF CONDUCTORS/SIZE	FROM	TO	REMARKS
P000	1"	COORDINATE WITH DUKE	NEW DUKE TRANSFORMER	NEW DUKE CT METER	COORDINATE ALL REQUIREMENTS WITH FPL.
P001A	4"	3-#500 + 1-#4/0 NEUTRAL	NEW DUKE TRANSFORMER	EXISTING MAIN CIRCUIT BREAKER 'MB-1'	
P001B	4"	3-#500 + 1-#4/0 NEUTRAL	NEW DUKE TRANSFORMER	EXISTING MAIN CIRCUIT BREAKER 'MB-1'	
P001C	4"	3-#500 + 1-#4/0 NEUTRAL	NEW DUKE TRANSFORMER	EXISTING MAIN CIRCUIT BREAKER 'MB-1'	
P002A	4"	3-#500 + 1-#4/0 N + 1-#4/0 GND	NEW ATS	NEW GENERATOR	
P002B	4"	3-#500 + 1-#4/0 N + 1-#4/0 GND	NEW ATS	NEW GENERATOR	
P002C	4"	3-#500 + 1-#4/0 N + 1-#4/0 GND	NEW ATS	NEW GENERATOR	
P002D	4"	3-#500 + 1-#4/0 N + 1-#4/0 GND	EXISTING MAIN CIRCUIT BREAKER 'MB-1'	NEW ATS	
P002E	4"	3-#500 + 1-#4/0 N + 1-#4/0 GND	EXISTING MAIN CIRCUIT BREAKER 'MB-1'	NEW ATS	
P002F	4"	3-#500 + 1-#4/0 N + 1-#4/0 GND	EXISTING MAIN CIRCUIT BREAKER 'MB-1'	NEW ATS	
P003A	4"	3-#500 + 1-#4/0 GND	NEW ATS	EXISTING 'MCC-1'	
P003B	4"	3-#500 + 1-#4/0 GND	NEW ATS	EXISTING 'MCC-1'	
P003C	4"	3-#500 + 1-#4/0 GND	NEW ATS	EXISTING 'MCC-1'	
P100	4"	3-#500 + 1-#3 GND	MCC SECTION 'A'	NEW PUMP #1 VFD	
P101	4"	3-#500 + 1-#3 GND	NEW PUMP #1 VFD	NEW WET WELL JUNCTION BOX	
P102	4"	AS REQUIRED	NEW WET WELL JUNCTION BOX	NEW PUMP #1 MOTOR	CABLE TO BE SUPPLIED INTEGRAL TO THE PUMP MOTOR BY MANUFACTURER.
P200	4"	3-#500 + 1-#3 GND	MCC SECTION 'A'	NEW PUMP #2 VFD	
P201	4"	3-#500 + 1-#3 GND	NEW PUMP #2 VFD	NEW WET WELL JUNCTION BOX	
P202	4"	AS REQUIRED	NEW WET WELL JUNCTION BOX	NEW PUMP #2 MOTOR	CABLE TO BE SUPPLIED INTEGRAL TO THE PUMP MOTOR BY MANUFACTURER.
P300	4"	3-#500 + 1-#3 GND	MCC SECTION 'B'	NEW PUMP #3 VFD	
P301	4"	3-#500 + 1-#3 GND	NEW PUMP #3 VFD	NEW WET WELL JUNCTION BOX	
P302	4"	AS REQUIRED	NEW WET WELL JUNCTION BOX	NEW PUMP #3 MOTOR	CABLE TO BE SUPPLIED INTEGRAL TO THE PUMP MOTOR BY MANUFACTURER.
P400	4"	3-#500 + 1-#3 GND	MCC SECTION 'B'	NEW PUMP #4 VFD	
P401	4"	3-#500 + 1-#3 GND	NEW PUMP #4 VFD	NEW WET WELL JUNCTION BOX	
P402	4"	AS REQUIRED	NEW WET WELL JUNCTION BOX	NEW PUMP #4 MOTOR	CABLE TO BE SUPPLIED INTEGRAL TO THE PUMP MOTOR BY MANUFACTURER.
P500	1"	3-#8 + 1-#10 GND	MCC-1	ODOR CONTROL UNIT	
P600	4"	3-#600 + 1-#1/0 GND	MCC-1	MCC SECTION 'A'	
P601	4"	3-#600 + 1-#1/0 GND	MCC-1	MCC SECTION 'A'	
P700	4"	3-#600 + 1-#1/0 GND	MCC-1	MCC SECTION 'B'	
P701	4"	3-#600 + 1-#1/0 GND	MCC-1	MCC SECTION 'B'	
P800	1"	3-#10 + 1-#10 GND	PANELBOARD LP-1 (CIRCUIT 37/39/41)	GATE OPERATOR	
P900	3/4"	2-#12 + 1-#12 GND	PANELBOARD LP-1 (CIRCUIT 36)	SITE LIGHTING SWITCH	
P901	3/4"	3-#12 + 1-#12 GND	SITE LIGHTING SWITCH	MOTION SENSOR	120V AND SWITCHED LEG
P902	3/4"	2-#12 + 1-#12 GND	MOTION SENSOR	MOTION CONTROLLED LIGHTING FIXTURE	
P903	3/4"	2-#12 + 1-#12 GND	MOTION SENSOR	NEXT LIGHTING FIXTURE	
P904	3/4"	2-#12 + 1-#12 GND	LIGHTING FIXTURE	NEXT LIGHTING FIXTRUE	

1

No.	Revisions	Date	By
1	IFC REVISION NO.1	08/14/24	TDT

Kimley»Horn

© 2024 KIMLEY-HORN AND ASSOCIATES, INC.
200 CENTRAL AVE, SUITE 600
ST. PETERSBURG, FL 33701
P: 727 547 3999
WWW.KIMLEY-HORN.COM REGISTRY NO. 35106

DESIGN ENGINEER:
TIMOTHY THOMAS, P.E.
FL LICENSE NUMBER
47079
DATE:

SCALE: AS NOTED
DESIGN: TDT
DRAWN: JLT
CHECKED: GLW

CONDUIT AND CABLE SCHEDULE

CITY OF ST. PETE BEACH
PUMP STATION 1
REHABILITATION
PINELLAS COUNY FLORIDA

DATE:
AUGUST 2024

PROJECT NO.
148404075

SHEET NUMBER
E-13

THOMAS ENGINEERING
777 S. Harbour Island Blvd, STE 350, TAMPA, FL 33602
813.227.9190
Certificate of Authorization No. 00031028

CONDUIT AND CABLE SCHEDULE

CONDUIT No.	QTY/SIZE	NUMER OF CONDUCTORS/SIZE	FROM	TO	REMARKS
C1	1"	2/C-#16 SHIELDED (BELDEN 8719)	FLOW METER TRANSMITTER	MASTER PUMP STATION CONTROL PANEL 'MPCP'	FOR NEW FLOW METER 4-20mA SIGNAL.
C2	1"	CABLE BY MANUFACTURER	FLOW METER TRANSMITTER	FLOW METER	ELECTRODE CABLE.
C3	1"	CABLE BY MANUFACTURER	FLOW METER TRANSMITTER	FLOW METER	COIL CURRENT CABLE.
C20	3/4"	2-#14 + 1-#14 GND	ODOR CONTROL UNIT	MASTER PUMP STATION CONTROL PANEL 'MPCP'	ODOR CONTROL RUNNING INDICATION.
C100	1"	10-#14 + 1-#14 GND	VFD #1	MASTER PUMP STATION CONTROL PANEL 'MPCP'	PUMP/VFD INPUT/OUTPUTS TO 'MPCP'. DRIVE RUN COMMAND, DRIVE RUNNING INDICATION, DRIVE FAULT INDICATION AND DRIVE IN AUTO MODE INDICATION. COUNT INCLUDES SPARES.
C101	1-1/2"	2: 2/C-#16 SHIELDED (BELDEN 8719)	VFD #1	MASTER PUMP STATION CONTROL PANEL 'MPCP'	VFD 4-20mA SPEED COMMAND AND 4-20mA SPEED REFERENCE SIGNALS.
C200	1"	10-#14 + 1-#14 GND	VFD #2	MASTER PUMP STATION CONTROL PANEL 'MPCP'	PUMP/VFD INPUT/OUTPUTS TO 'MPCP'. DRIVE RUN COMMAND, DRIVE RUNNING INDICATION, DRIVE FAULT INDICATION AND DRIVE IN AUTO MODE INDICATION. COUNT INCLUDES SPARES.
C201	1-1/2"	2: 2/C-#16 SHIELDED (BELDEN 8719)	VFD #2	MASTER PUMP STATION CONTROL PANEL 'MPCP'	VFD 4-20mA SPEED COMMAND AND 4-20mA SPEED REFERENCE SIGNALS.
C300	1"	10-#14 + 1-#14 GND	VFD #3	MASTER PUMP STATION CONTROL PANEL 'MPCP'	PUMP/VFD INPUT/OUTPUTS TO 'MPCP'. DRIVE RUN COMMAND, DRIVE RUNNING INDICATION, DRIVE FAULT INDICATION AND DRIVE IN AUTO MODE INDICATION. COUNT INCLUDES SPARES.
C301	1-1/2"	2: 2/C-#16 SHIELDED (BELDEN 8719)	VFD #3	MASTER PUMP STATION CONTROL PANEL 'MPCP'	VFD 4-20mA SPEED COMMAND AND 4-20mA SPEED REFERENCE SIGNALS.
C400	1"	10-#14 + 1-#14 GND	VFD #4	MASTER PUMP STATION CONTROL PANEL 'MPCP'	PUMP/VFD INPUT/OUTPUTS TO 'MPCP'. DRIVE RUN COMMAND, DRIVE RUNNING INDICATION, DRIVE FAULT INDICATION AND DRIVE IN AUTO MODE INDICATION. COUNT INCLUDES SPARES.
C401	1-1/2"	2: 2/C-#16 SHIELDED (BELDEN 8719)	VFD #4	MASTER PUMP STATION CONTROL PANEL 'MPCP'	VFD 4-20mA SPEED COMMAND AND 4-20mA SPEED REFERENCE SIGNALS.
C500	1"	12-#12 + 1-#12 GND	GENERATOR	MASTER PUMP STATION CONTROL PANEL 'MPCP'	GENERATOR MONITORING CONDUCTORS. COUNT INCLUDES SPARES.
C501	1"	4-#12 + 1-#12 GND	GENERATOR	AUTOMATIC TRANSFER SWITCH	GENERATOR START CIRCUIT. COUNT INCLUDES SPARES.
C502	1"	10-#12 + 1-#12 GND	GENERATOR DIESEL TANK	MASTER PUMP STATION CONTROL PANEL 'MPCP'	GENERATOR DIESEL TANK MONITORING CONDUCTORS. COUNT INCLUDES SPARES.
C503	1"	2/C-#16 SHIELDED (BELDEN 8719)	GENERATOR DIESEL TANK	MASTER PUMP STATION CONTROL PANEL 'MPCP'	GENERATOR DIESEL TANK LEVEL TRANSMITTER.
C600	3/4"	2-#12 + 1-#12 GND	GENERATOR SUT DOWN PUSHBUTTON	NEW GENERATOR.	
C601	1"	2/C-#16 TWISTEDSHIELD	PUMP #1 WET WELL JUNCTION BOX	VFD #1	PUMP #1 TEMPERATURE AND LEAK SENSOR CONDUCTORS. CABLE SHALL BE BELDEN #8719 (VERIFY WITH XYLEM).
C602	1"	2/C-#16 TWISTEDSHIELD	PUMP #2 WET WELL JUNCTION BOX	VFD #2	PUMP #2 TEMPERATURE AND LEAK SENSOR CONDUCTORS. CABLE SHALL BE BELDEN #8719 (VERIFY WITH XYLEM).
C603	1"	2/C-#16 TWISTEDSHIELD	PUMP #3 WET WELL JUNCTION BOX	VFD #3	PUMP #3 TEMPERATURE AND LEAK SENSOR CONDUCTORS. CABLE SHALL BE BELDEN #8719 (VERIFY WITH XYLEM).
C604	1"	2/C-#16 TWISTEDSHIELD	PUMP #4 WET WELL JUNCTION BOX	VFD #4	PUMP #4 TEMPERATURE AND LEAK SENSOR CONDUCTORS. CABLE SHALL BE BELDEN #8719 (VERIFY WITH XYLEM).
C701	3/4"	2-#14 + 1-#14 GND	VALVE VAULT	MASTER PUMP STATION CONTROL PANEL 'MPCP'	VFD #1 PRESSURE SWITCH, HIGH PRESSURE INDICATION.
C701A	3/4"	2-#14 + 1-#14 GND	VALVE VAULT	MASTER PUMP STATION CONTROL PANEL 'MPCP'	VFD #1 CHECK VALVE OPEN INDICATION.
C702	3/4"	2-#14 + 1-#14 GND	VALVE VAULT	MASTER PUMP STATION CONTROL PANEL 'MPCP'	VFD #2 PRESSURE SWITCH, HIGH PRESSURE INDICATION.
C702A	3/4"	2-#14 + 1-#14 GND	VALVE VAULT	MASTER PUMP STATION CONTROL PANEL 'MPCP'	VFD #2 CHECK VALVE OPEN INDICATION.
C703	3/4"	2-#14 + 1-#14 GND	VALVE VAULT	MASTER PUMP STATION CONTROL PANEL 'MPCP'	VFD #3 PRESSURE SWITCH, HIGH PRESSURE INDICATION.
C703A	3/4"	2-#14 + 1-#14 GND	VALVE VAULT	MASTER PUMP STATION CONTROL PANEL 'MPCP'	VFD #3 CHECK VALVE OPEN INDICATION.
C704	3/4"	2-#14 + 1-#14 GND	VALVE VAULT	MASTER PUMP STATION CONTROL PANEL 'MPCP'	VFD #4 PRESSURE SWITCH, HIGH PRESSURE INDICATION.
C704A	3/4"	2-#14 + 1-#14 GND	VALVE VAULT	MASTER PUMP STATION CONTROL PANEL 'MPCP'	VFD #4 CHECK VALVE OPEN INDICATION.
C801	2"	CABLES BY MANUFACTURER	WET WELL NO. 1	PUMP #1 WET WELL JUNCTION BOX	HIGH-HIGH LEVEL ALARM, LEAD PUMP ON, LAG PUMP ON, PUMPS OFF AND LOW-LOW LEVEL ALARM FLOAT CABLES.
C801A	1"	10-#14 + 1-#14 GND	PUMP #1 WET WELL JUNCTION BOX	MASTER PUMP STATION CONTROL PANEL 'MPCP'	HIGH-HIGH LEVEL ALARM, LEAD PUMP ON, LAG PUMP ON, PUMPS OFF AND LOW-LOW LEVEL ALARM FLOAT CABLES.
C802	2"	CABLES BY MANUFACTURER	WET WELL NO. 2	PUMP #2 WET WELL JUNCTION BOX	HIGH-HIGH LEVEL ALARM, LEAD PUMP ON, LAG PUMP ON, PUMPS OFF AND LOW-LOW LEVEL ALARM FLOAT CABLES.
C802A	1"	10-#14 + 1-#14 GND	PUMP #2 WET WELL JUNCTION BOX	MASTER PUMP STATION CONTROL PANEL 'MPCP'	HIGH-HIGH LEVEL ALARM, LEAD PUMP ON, LAG PUMP ON, PUMPS OFF AND LOW-LOW LEVEL ALARM FLOAT CABLES.
C803	2"	2/C-#16 SHIELDED (BELDEN 8719)	WET WELL NO. 1	PUMP #1 WET WELL JUNCTION BOX	WET WELL #1 LEVEL TRANSMITTER.
C803A	1"	2/C-#16 SHIELDED (BELDEN 8719)	PUMP #1 WET WELL JUNCTION BOX	MASTER PUMP STATION CONTROL PANEL 'MPCP'	WET WELL #1 LEVEL TRANSMITTER.
C804	2"	2/C-#16 SHIELDED (BELDEN 8719)	WET WELL NO. 2	PUMP #2 WET WELL JUNCTION BOX	WET WELL #2 LEVEL TRANSMITTER.
C804A	1"	2/C-#16 SHIELDED (BELDEN 8719)	PUMP #2 WET WELL JUNCTION BOX	MASTER PUMP STATION CONTROL PANEL 'MPCP'	WET WELL #2 LEVEL TRANSMITTER.
C900	3/4"	2-#12 + 1-#12 GND	GENERATOR	GENERATOR SHUTDOWN PUSHBUTTON No. 3	
C901	3/4"	2-#12 + 1-#12 GND	GENERATOR SHUTDOWN PUSHBUTTON No. 3	GENERATOR SHUTDOWN PUSHBUTTON No. 2	
C902	3/4"	2-#12 + 1-#12 GND	GENERATOR SHUTDOWN PUSHBUTTON No. 2	GENERATOR SHUTDOWN PUSHBUTTON No. 1	

No.	Revisions	Date	By
1	IFC REVISION NO.1	08/14/24	TDT

Kimley»Horn

© 2024 KIMLEY-HORN AND ASSOCIATES, INC.
200 CENTRAL AVE, SUITE 600
ST. PETERSBURG, FL 33701
P: 727 547 3999
WWW.KIMLEY-HORN.COM REGISTRY NO. 35106

DESIGN ENGINEER:
TIMOTHY THOMAS, P.E.
FL LICENSE NUMBER 47079
DATE:

SCALE: AS NOTED
DESIGN: TDT
DRAWN: JLT
CHECKED: GLW

CONDUIT AND CABLE SCHEDULE

CITY OF ST. PETE BEACH
PUMP STATION 1 REHABILITATION
PINELLAS COUNY FLORIDA

DATE: AUGUST 2024

PROJECT NO. 148404075

SHEET NUMBER E-14

THOMAS ENGINEERING
777 S. Harbour Island Blvd, STE 350, TAMPA, FL 33602
813.227.9190
Certificate of Authorization No. 00031028

PHASE II IMPROVEMENTS

FOR

CITY OF ST. PETE BEACH
PUMP STATION 1 REHABILITATION

SECTION 25, TOWNSHIP 31 SOUTH, RANGE 15 EAST

CITY OF ST. PETE BEACH, FLORIDA

8665 BOCA CIEGA DRIVE
ST. PETE BEACH, FL 33706

St. Pete Beach
The Sunset Capital of Florida

PROJECT TEAM:

OWNER:
CITY OF ST. PETE BEACH
155 COREY AVE
ST. PETE BEACH, FLORIDA 33706
CONTACT: BRETT WARNER, P.E.
727.363.9254

ENGINEER:
KIMLEY-HORN AND ASSOCIATES, INC.
200 CENTRAL AVENUE, SUITE 600
SAINT PETERSBURG, FL 33701
CONTACT: SHELBY HUGHES, P.E.
727.498.2585

ELECTRICAL:
THOMAS ENGINEERING
777 S. HARBOUR ISLAND BLVD, SUITE 350
TAMPA, FL 33620
CONTACT: TIMOTHY THOMAS, P.E.
813.227.9190

SURVEYOR:
HYATT SURVEY SERVICES, INC.
2012 LENA ROAD
BRADENTON, FL 34211
CONTACT: JOHN MATTHEWS
941.748.4693

SHEET INDEX

DISCIPLINE	DRAWING	TITLE
GENERAL	G-1.1	COVER SHEET
ARCHITECTURAL	A-1	ARCHITECTURAL GENERAL NOTES
ARCHITECTURAL	A-2	ARCHITECTURAL SITE PLAN
ARCHITECTURAL	A-3	ELECTRICAL BUILDING DEMOLITION
ARCHITECTURAL	A-4	ELECTRICAL BUILDING ELEVATIONS
LANDSCAPE	L-1	LANDSCAPE PLAN
LANDSCAPE	L-2	LANDSCAPE NOTES
LANDSCAPE	L-3	LANDSCAPE DETAILS
TREE MITIGATION	TM-1	TREE MITIGATION PLAN
TREE MITIGATION	TM-2	TREE MITIGATION NOTES
IRRIGATION	IR-1	SCHEMATIC IRRIGATION PLAN
IRRIGATION	IR-2	SCHEMATIC IRRIGATION NOTES
IRRIGATION	IR-3	SCHEMATIC IRRIGATION DETAILS

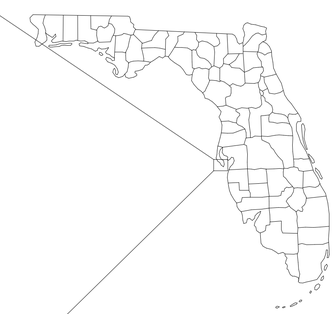

UTILITY CONTACTS:

CHARTER COMMUNICATIONS
4145 FALKENBURG RD.
RIVERVIEW, FL 33578
CONTACT: JEREMY CORNETTE
863-581-5734

DUKE ENERGY
452 EAST CROWN POINT RD.
WINTER GARDEN, FL 34787
CONTACT: VIVIAN CASTRO-CINTRON
407-504-7330

FRONTIER COMMUNICATIONS
3712 WEST WALNUT ST.
TAMPA, FL 33607
CONTACT: TONI CANNON
813-875-1014

PINELLAS COUNTY UTILITIES - WATER AND RECLAIMED
14 SOUTH FORT HARRISON AVE.
CLEARWATER, FL 33756
CONTACT: JAY PERKINS
727-464-3536

UNITI FIBER
200 CUMBERLAND DR.
ST. AUGUSTINE, FL 32095
CONTACT: CHARLIE CROFT
251-214-7059

TECO PEOPLE'S GAS
8416 PALM RIVER RD.
TAMPA, FL 33619
CONTACT: JOAN DOMNING
813-275-3783

PREPARED BY
Kimley»Horn

© 2023 KIMLEY-HORN AND ASSOCIATES, INC.
200 CENTRAL AVENUE, SUITE 600
ST. PETERSBURG, FL 33701
PHONE (727) 547-3999
WWW.KIMLEY-HORN.COM REGISTRY NO. 35106

811
Know what's below.
Call before you dig.

No.	Revisions	Date	By

Kimley»Horn
© 2023 KIMLEY-HORN AND ASSOCIATES, INC.
200 CENTRAL AVENUE, SUITE 600
ST. PETERSBURG, FL 33701
P: 727 547 3999
WWW.KIMLEY-HORN.COM REGISTRY NO. 35106

SCALE: N.T.S.
DESIGN: SNH
DRAWN: AJO
CHECKED: SAE

COVER SHEET

CITY OF ST. PETE BEACH
PUMP STATION 1 REHABILITATION
PINELLAS COUNY FLORIDA

DATE: DECEMBER 2023
PROJECT NO. 148404075
SHEET NUMBER G-1.1

PAINTING SPEC - STUCCO

1. ONE COAT LOXON BLOCK SURFACER OR LOXON CONDITIONER

2. TWO COATS LOXON XP (SHERWIN WILLIAMS A24-1400 SERIES), BRUSH, ROLLER OR SPRAY APPLIED, 14-18 MILS WET. TOTAL DRY FILM THICKNESS OF 12-16 MILS OF TOPCOAT AND A SURFACE WITH 10 OR LESS PINHOLES PER SQ. FOOT.

APPROVED PRODUCTS LIST - BASIS OF DESIGN

PRODUCT	MANUFACTURER	MODEL	FPA NUMBER
ALUMINUM FLUSH DOORS	CLINE DOORS	SERIES 100BE	FL6336 R8
ALUMINUM LOUVERS	AMERICAN WARMING AND VENTILATING	LE-32	FL7453 R5
ALUMINUM LOUVERS SHUTTERS	AMERICAN SHUTTER SYSTEMS ASSOC INC	EXTRUDED BERTHA BAHAMA	FL2683 R8

GENERAL NOTES

1. THE CONTRACTOR SHALL REVIEW ALL DOCUMENTS AND VERIFY ALL DIMENSIONS AND FIELD CONDITIONS AND SHALL CONFIRM THAT WORK IS BUILDABLE AS SHOWN. ANY CONFLICTS OR OMISSIONS, ETC., SHALL BE IMMEDIATELY REPORTED TO THE ARCHITECT FOR CLARIFICATION PRIOR TO THE PERFORMANCE OF ANY WORK IN QUESTION.
2. DO NOT SCALE DRAWINGS. WRITTEN DIMENSIONS GOVERN ALL PARTITION LOCATIONS. ALL DOOR AND OPENING LOCATIONS SHALL BE AS SHOWN ON DRAWINGS. IN CASE OF CONFLICT, NOTIFY THE ARCHITECT. ALL DIMENSIONS MARKED "CLEAR" SHALL BE MAINTAINED AND SHALL ALLOW FOR THICKNESS OF ALL FINISHES INCLUDING CARPET, PAD, TILE, VINYL, GYPSUM BOARD, ETC. THE WRITTEN SCALES (i.e. 1/8" = 1'-0") APPLY TO FULL SIZE, UNREDUCED DRAWINGS. LARGE SCALE DRAWINGS HAVE PRECEDENCE OVER SMALL SCALE DRAWINGS.
3. CONTRACTOR SHALL OBTAIN ALL NECESSARY APPROVALS AND PAY NECESSARY PERMITS AND CERTIFICATES.
4. THE CONTRACTOR IS EXPECTED TO KEEP PREMISES CLEAN DURING CONSTRUCTION. TRASH WILL NOT BE ALLOWED TO ACCUMULATE IN THE SPACE DURING CONSTRUCTION. ALL DEBRIS SHALL BE REMOVED DAILY. FINAL CLEAN UP AND REPAIR IS PART OF THIS WORK. REMOVE ALL DUST, DEBRIS, OILS, STAINS, FINGERPRINTS AND LABELS FROM ALL EXPOSED FINISHED SURFACES. SAFE WORKING AREA AND CONDITIONS SHALL BE MAINTAINED AT ALL TIMES.
5. THE CONTRACTOR SHALL VERIFY LOCATIONS OF EXISTING UTILITIES, ABOVE AND BELOW GRADE BEFORE COMMENCING WORK. ANY DISCREPANCIES IN UTILITY LOCATIONS SHALL BE BROUGHT TO THE IMMEDIATE ATTENTION OF THE ARCHITECT. CARE SHALL BE TAKEN TO PROTECT ALL UTILITIES WHICH ARE TO REMAIN.
6. IT IS THE CONTRACTOR'S RESPONSIBILITY TO FURNISH AND INSTALL ALL LABOR AND EQUIPMENT NECESSARY TO COMPLETE PROJECT AS PER DOCUMENTS. THE CONTRACTOR IS TO DELIVER PROJECT CLEAN AND READY FOR USE AS INTENDED BY OWNER.
7. PERFORM ALL WORK IN ACCORDANCE WITH ACCEPTED CONSTRUCTION STANDARDS. ALL CONSTRUCTION SHALL BE IN STRICT ACCORDANCE WITH THE CONSTRUCTION DOCUMENTS UNLESS A VARIANCE IS APPROVED BY THE OWNER AND OR ARCHITECT.
8. ALL WORK SHALL BE IN STRICT COMPLIANCE WITH GOVERNING FEDERAL, STATE, AND LOCAL BUILDING CODE REQUIREMENTS, REGULATIONS, ORDINANCES, AND STANDARDS INCLUDING ADA, FHA, AND / OR OTHER ACCESSIBILITY CODES.
9. ALL WORK SHALL BE EXECUTED IN ACCORDANCE WITH ACCEPTED INDUSTRY STANDARDS AND SHALL CONFORM TO SPECIFIC REGULATIONS AS MANDATED BY THE OWNER AND THE ARCHITECT.
10. CONTRACTOR SHALL PROVIDE ALL NECESSARY BLOCKING IN WALLS FOR SUPPORT OF ALL EQUIPMENT, SHELVING, ACCESSORIES, SIGNAGE, AND OTHER REQUIRED DEVICES.
11. ALL REQUESTS FOR SUBSTITUTIONS OF ANY SPECIFIED ITEMS SHALL BE SUBMITTED IN WRITING TO THE ARCHITECT AND WILL BE CONSIDERED ONLY IF THE ALTERNATE PROPOSED IS PROVEN TO BE MORE ADVANTAGEOUS TO THE OWNER WITH RESPECT TO DELIVERY DATE, QUALITY, OR COST. UNDER NO CIRCUMSTANCES WILL THE ARCHITECT BE REQUIRED TO PROVE THAT A PRODUCT PROPOSED FOR SUBSTITUTION IS OR IS NOT OF EQUAL QUALITY TO THE PRODUCT SPECIFIED.

SELECTIVE DEMOLITION NOTES

SELECTIVE DEMOLITION NOTES
1. COORDINATE ALL DEMOLITION WORK WITH NEW WORK.
2. DO NOT DAMAGE EXISTING CONSTRUCTION THAT IS TO REMAIN. PROTECT AS NECESSARY.
3. SURFACES ADJACENT TO AREAS OF DEMOLITION WHICH ARE AFFECTED BY DEMOLITION WORK SHALL BE REPAIRED AND FINISHED TO MATCH ADJACENT SURFACES.
4. ALL STRUCTURAL COMPONENTS OF THE BUILDING TO REMAIN, INCLUDING FOUNDATIONS, GROUND FLOOR AND ELEVATED FLOOR SLABS, SHEAR WALLS, LOAD BEARING WALLS, COLUMNS AND BEAMS UNLESS OTHERWISE NOTED.
5. SEE ARCHITECTURAL, PLUMBING AND ELECTRICAL FOR LOCATIONS OF NEW TRENCHES, HOLES, SHAFTS, CHASES, TEC. THROUGH CONCRETE SLABS.
6. SURFACES SHALL BE DRY AND IN SOUND CONDITION. REMOVE OIL, DUST, DIRT, LOOSE RUST, PEELING PAINT OR OTHER CONTAMINATION TO ENSURE GOOD ADHESION.
7. REMOVE MILDEW BEFORE PAINTING BY WASHING WITH A SOLUTION OF 1 PART LIQUID HOUSEHOLD BLEACH AND 3 PARTS OF WARM WATER. APPLY THE SOLUTION AND SCRUB THE MILDEWED AREA. ALLOW THE SOLUTION TO REMAIN ON THE SURFACE FOR 10 MINUTES. RINSE THOROUGHLY WITH CLEAN WATER AND ALLOW THE SURFACE TO DRY A MINIMUM OF 48 HOURS BEFORE PAINTING.
8. REMOVE ITEMS INCLUDING BUT NOT LIMITED TO THERMOSTATS, ELECTRICAL OUTLETS, SWITCH COVERS AND SIMILAR ITEMS PRIOR TO PAINTING. AFTER COMPLETING PAINTING OPERATIONS IN EACH SPACE OR AREA, REINSTALL ITEMS REMOVED USING WORKERS SKILLED IN THE TRADES INVOLVED.

No.	Revisions	Date	By

Kimley»Horn
© 2023 KIMLEY-HORN AND ASSOCIATES, INC.
200 CENTRAL AVENUE, SUITE 600
ST. PETERSBURG, FL 33701
P: 727 547 3999
WWW.KIMLEY-HORN.COM REGISTRY NO. 35106

SCALE:
DESIGN: SNH
DRAWN: AJO
CHECKED: SAE

ARCHITECTURAL GENERAL NOTES

CITY OF ST. PETE BEACH
PUMP STATION 1 REHABILITATION
PINELLAS COUNTY FLORIDA

DATE: DECEMBER 2023
PROJECT NO. 148404075
SHEET NUMBER A-1

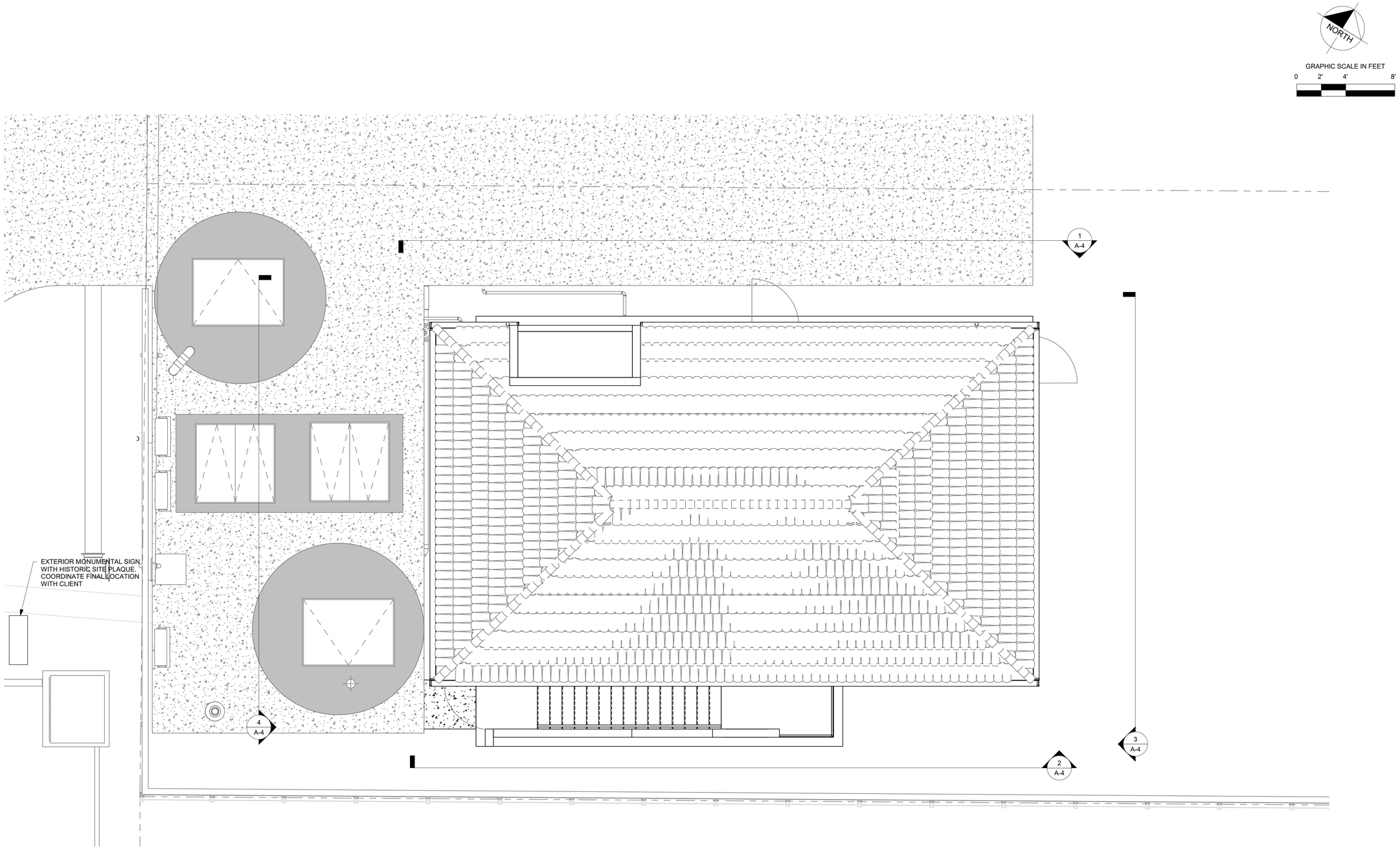

1
A-2

ARCHITECTURAL SITE PLAN

SCALE: 1/4" = 1'-0"

No.	Revisions	Date	By

Kimley»Horn

© 2023 KIMLEY-HORN AND ASSOCIATES, INC.
200 CENTRAL AVENUE, SUITE 600
ST. PETERSBURG, FL 33701
P: 727 547 3999
WWW.KIMLEY-HORN.COM REGISTRY NO. 35106

SCALE:
DESIGN: SNH
DRAWN: AJO
CHECKED: SAE

ARCHITECTURAL SITE PLAN

CITY OF ST. PETE BEACH
PUMP STATION 1 REHABILITATION
PINELLAS COUNY FLORIDA

DATE: DECEMBER 2023

PROJECT NO. 148404075

SHEET NUMBER A-2

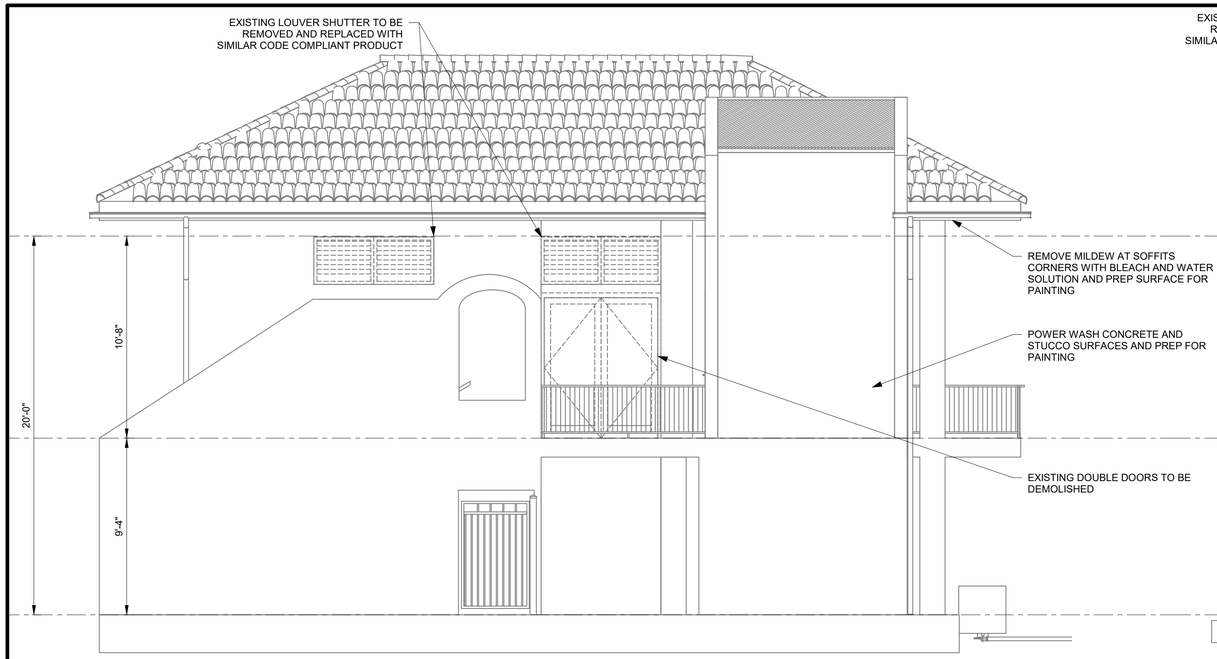

1 / A-3 NORTH ELEVATION DEMO
SCALE: 1/4" = 1'-0"

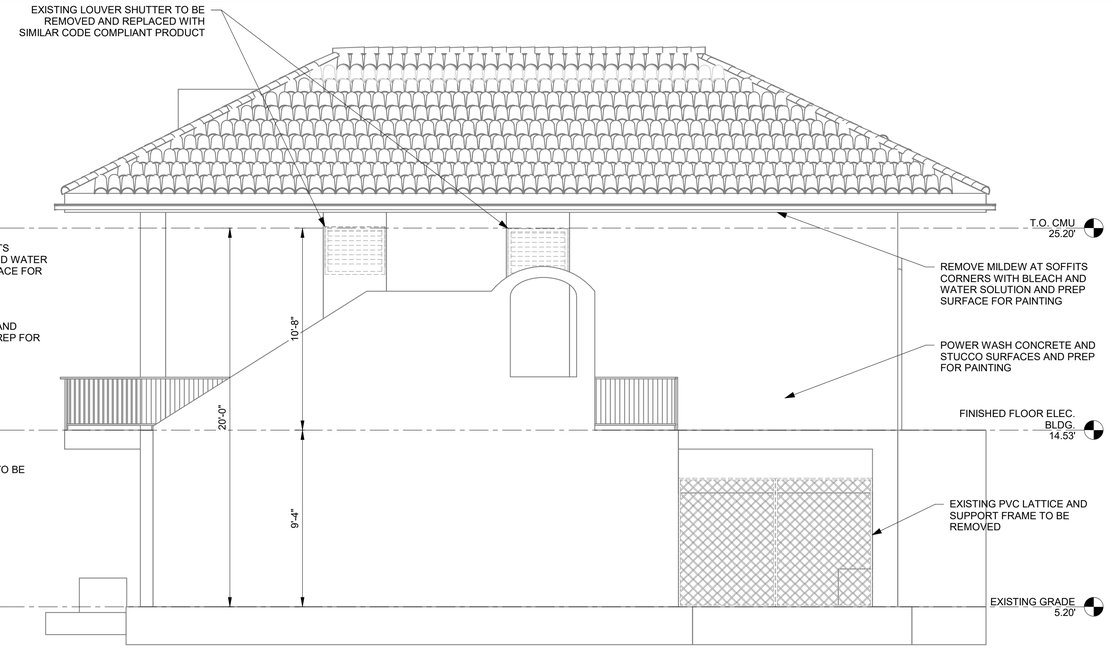

2 / A-3 SOUTH ELEVATION DEMO
SCALE: 1/4" = 1'-0"

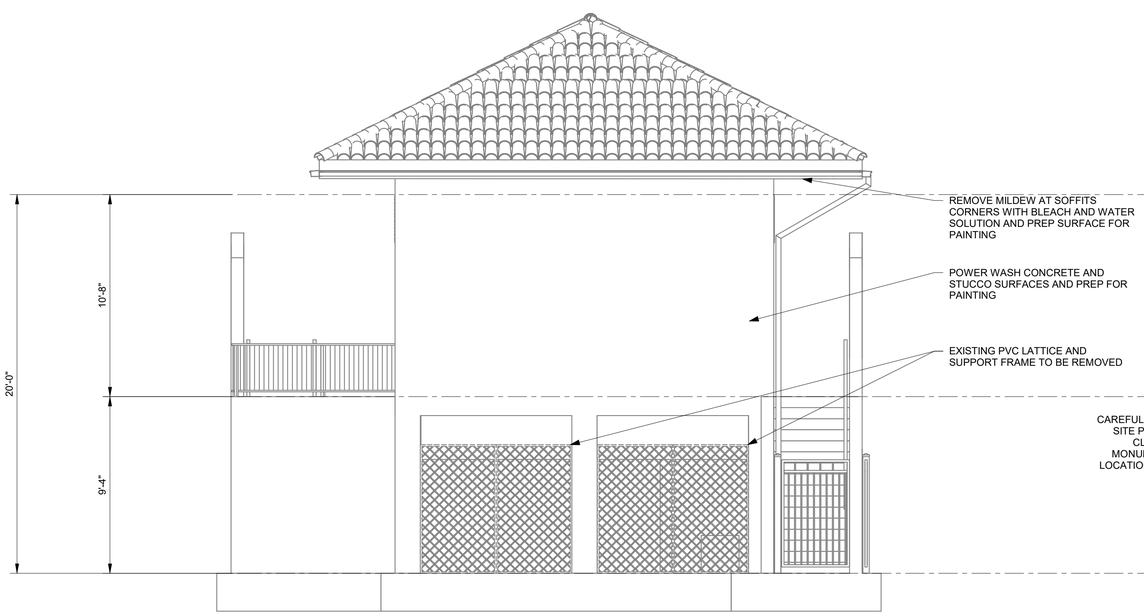

3 / A-3 EAST ELEVATION DEMO
SCALE: 1/4" = 1'-0"

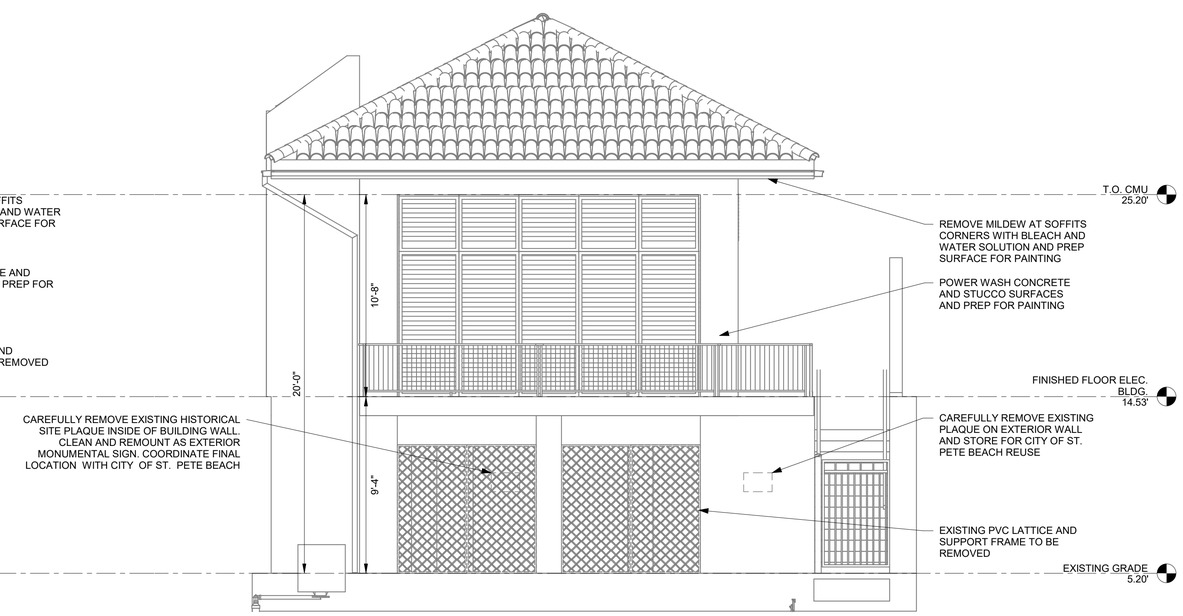

4 / A-3 WEST ELEVATION DEMO
SCALE: 1/4" = 1'-0"

No.	Revisions	Date	By

Kimley»Horn

© 2023 KIMLEY-HORN AND ASSOCIATES, INC.
200 CENTRAL AVENUE, SUITE 600
ST. PETERSBURG, FL 33701
P: 727 547 3999
WWW.KIMLEY-HORN.COM REGISTRY NO. 35106

SCALE:
DESIGN: SNH
DRAWN: AJO
CHECKED: SAE

ELECTRICAL BUILDING DEMOLITION

CITY OF ST. PETE BEACH
PUMP STATION 1 REHABILITATION
PINELLAS COUNTY FLORIDA

DATE: DECEMBER 2023
PROJECT NO. 148404075
SHEET NUMBER A-3

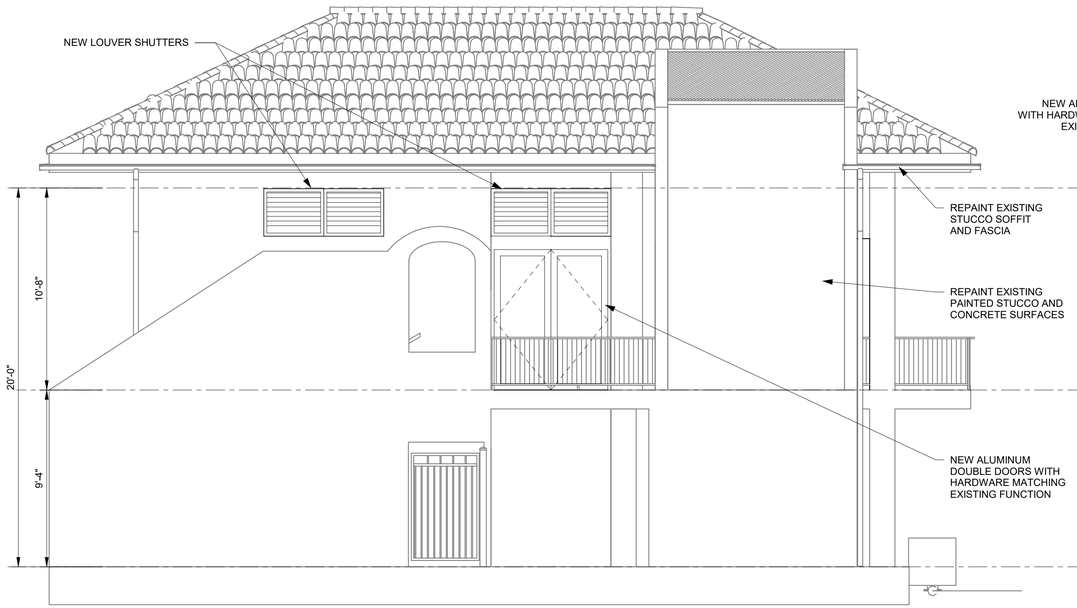

1 A-4 NORTH ELEVATION
SCALE: 1/4" = 1'-0"

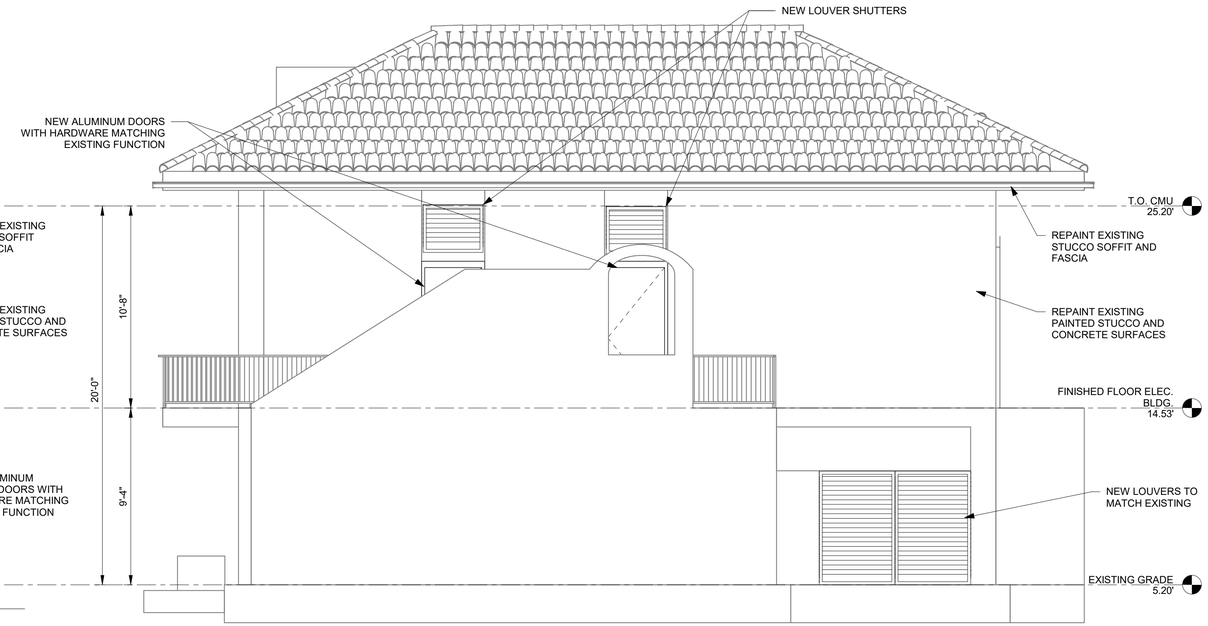

2 A-4 SOUTH ELEVATION
SCALE: 1/4" = 1'-0"

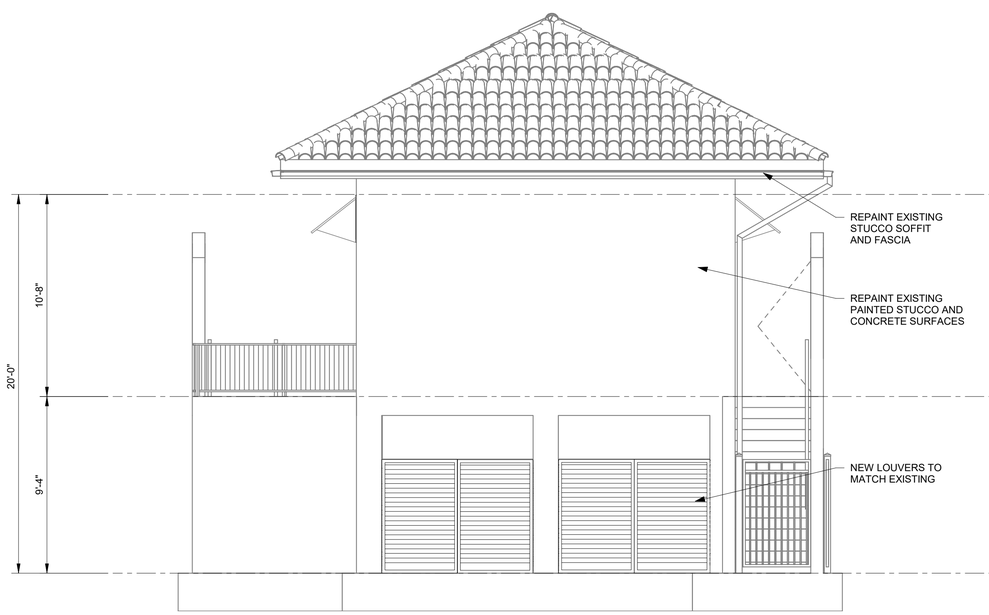

3 A-4 EAST ELEVATION
SCALE: 1/4" = 1'-0"

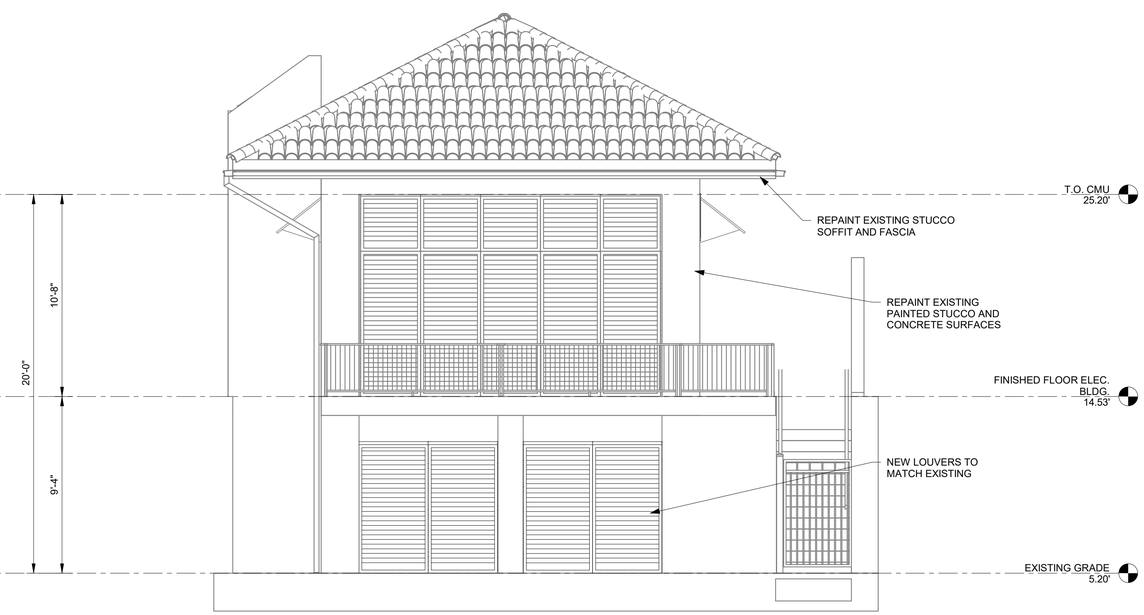

4 A-4 WEST ELEVATION
SCALE: 1/4" = 1'-0"

No.	Revisions	Date	By

Kimley»Horn

© 2023 KIMLEY-HORN AND ASSOCIATES, INC.
200 CENTRAL AVENUE, SUITE 600
ST. PETERSBURG, FL 33701
P: 727 547 3999
WWW.KIMLEY-HORN.COM REGISTRY NO. 35106

SCALE:
DESIGN: SNH
DRAWN: AJO
CHECKED: SAE

ELECTRICAL BUILDING ELEVATIONS

CITY OF ST. PETE BEACH
PUMP STATION 1 REHABILITATION
PINELLAS COUNTY FLORIDA

DATE: DECEMBER 2023
PROJECT NO. 148404075
SHEET NUMBER A-4

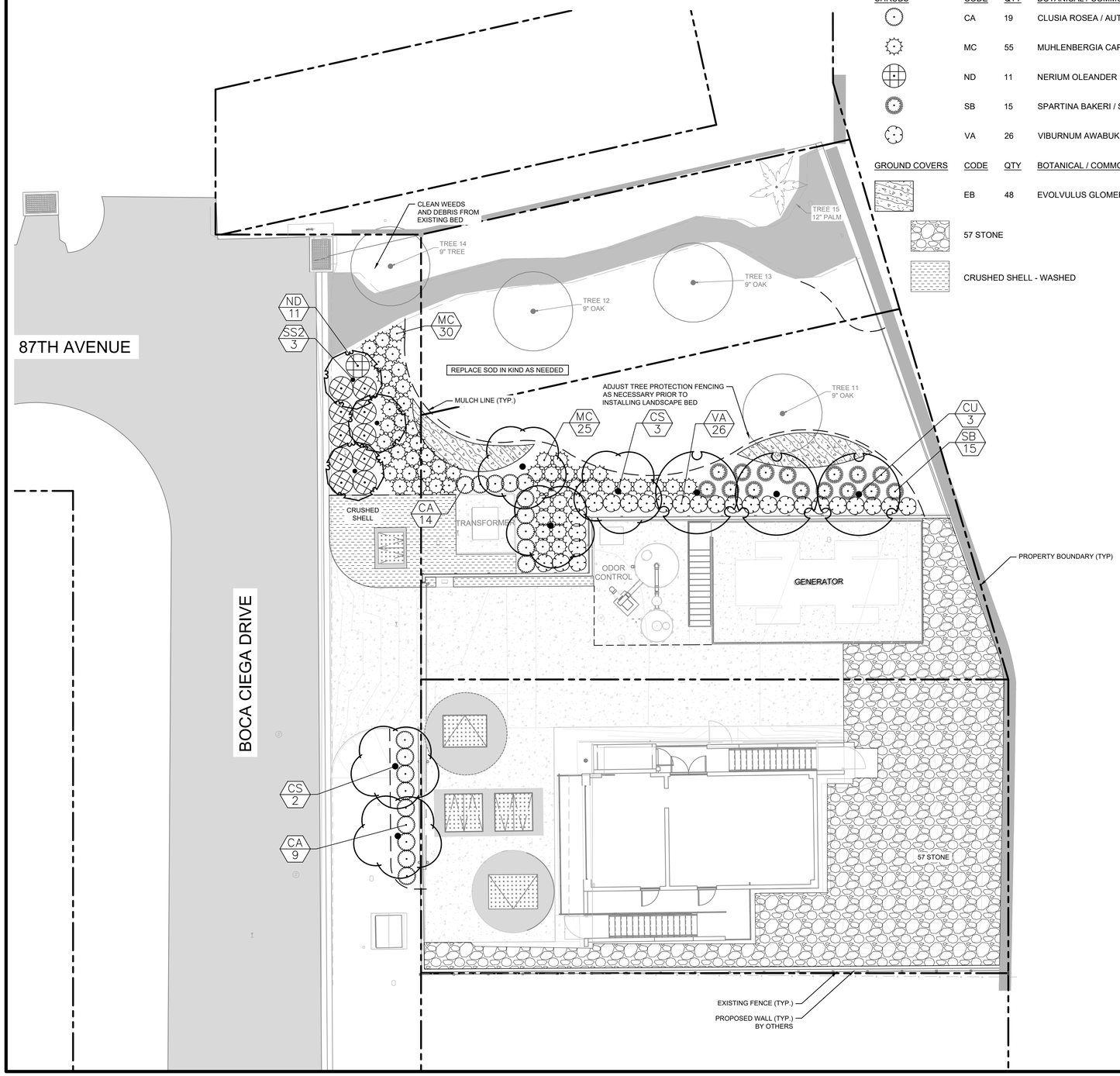

PLANT SCHEDULE

TREES	CODE	QTY	BOTANICAL / COMMON NAME	CAL (MIN)	CONT (MIN)	HEIGHT (MIN)	SPREAD	SPACING	NATIVE
	CU	3	COCCOLOBA UVIFERA / SEA GRAPE	MULTI-TRUNK	POT	12 FT MIN	4 FT MIN	AS SHOWN	YES
	CS	5	CONOCARPUS ERECTUS F. SERICEUS / SILVER BUTTONWOOD	2 IN CAL	FG	12 FT MIN	4 FT MIN	AS SHOWN	YES
	SS2	3	SABAL PALMETTO / CABBAGE PALMETTO SLICKED MIN 8 FT HT	FULLY REGENERATED	FG	16 - 20` (VARIES)	4 FT MIN	AS SHOWN	YES

SHRUBS	CODE	QTY	BOTANICAL / COMMON NAME	SIZE	CONT	HEIGHT	SPREAD	SPACING	NATIVE
	CA	19	CLUSIA ROSEA / AUTOGRAPH TREE	7 GAL	POT	24 IN MIN	24 IN MIN	36 IN OC	YES
	MC	55	MUHLENBERGIA CAPILLARIS / PINK MUHLY GRASS	1 GAL	POT	12 IN MIN	12 IN MIN	36 IN OC	YES
	ND	11	NERIUM OLEANDER `DWARF PINK ICE` / DWARF PINK ICE OLEANDER	3 GAL	POT	18 IN MIN	18 IN MIN	48 IN OC	NO
	SB	15	SPARTINA BAKERI / SAND CORDGRASS	1 GAL	POT	12 IN MIN	12 IN MIN	48 IN OC	YES
	VA	26	VIBURNUM AWABUKI / EVERGREEN SWEET VIBURNUM	7 GAL	POT	30 IN MIN	24 IN MIN	36 IN OC	NO

GROUND COVERS	CODE	QTY	BOTANICAL / COMMON NAME	SIZE	CONT	HEIGHT	SPREAD	SPACING	NATIVE
	EB	48	EVOLVULUS GLOMERATUS `BLUE DAZE` / BRAZILIAN DWARF MORNING GLORY	1 GAL	POT	12 IN MIN	10 IN MIN	24 IN OC	YES

57 STONE

CRUSHED SHELL - WASHED

PUMP STATION 1 LANDSCAPE CALCULATIONS

ST. PETE BEACH LDC

	REQUIRED	PROVIDED
FRONT SETBACK REQUIREMENT		
MINIMUM LANDSCAPE DEPTH OF 10% OF R.O.W. DEPTH	60 FT R.O.W. DEPTH = 6' LANDSCAPE AREA	6' WIDE LANDSCAPE AREA
1 TREE / 180 SF OF REQUIRED LANDSCAPE *SECTION 22.7(A)*	438 SF OF REQ. LANDSCAPE / 180 SF = 3 TREES	3 TREES
REPLACEMENT TREES		
EXISTING TREES OVER 4" DBH TO BE REMOVED SHALL BE REPLACED AT A RATIO OF 2 TREES FOR EACH TREE REMOVED. *SECTION 22.12(E)(2)*	4 TREES REMOVED X 2 REPLACEMENT TREES = 8 REQUIRED REPLACEMENT TREES	8 REPLACEMENT TREES

NOTES:

1. ALL PLANT SPECIFICATIONS IN THE PLANT SCHEDULE SHALL BE CONSIDERED THE MINIMUM ALLOWABLE SPECIFICATIONS. CONTRACTOR SHALL PROCURE PLANT MATERIALS AND UPSIZE AS NECESSARY TO MEET THE MOST STRINGENT SPECIFICATION.
2. LANDSCAPE ARCHITECT RESERVES THE RIGHT TO FIELD ADJUST ALL PLANT MATERIAL.
3. ALL QUANTITIES PROVIDED FOR CONVENIENCE ONLY. CONTRACTOR SHALL CONFIRM ALL QUANTITIES PER PLAN PRIOR TO BIDDING AND CONSTRUCTION.
4. CONTRACTOR SHALL SOD TO LIMITS OF DISTURBANCE, INCLUDING ANY DISTURBANCE WITHIN RIGHT-OF-WAY. ALL SOD TO BE NON-IRRIGATED BAHIA. CONFIRM FINAL SPECIES SELECTION WITH OWNER PRIOR TO INSTALLATION.
5. REFER TO SHEETS L-2 AND L-3 FOR LANDSCAPE NOTES AND DETAILS.

SYMBOL KEY:

EXISTING TREE TO BE PRESERVED

EXISTING PALM TO BE PRESERVED

NORTH

GRAPHIC SCALE IN FEET
0 5 10 20

CALL 2 WORKING DAYS BEFORE YOU DIG

IT'S THE LAW! DIAL 811

811 Know what's below. Call before you dig.

SUNSHINE STATE ONE CALL OF FLORIDA, INC.

No.	Revisions	Date	By

Kimley»Horn

© 2023 KIMLEY-HORN AND ASSOCIATES, INC.
200 CENTRAL AVE., SUITE 600
ST. PETERSBURG, FL 33701
P: 727 547 3999
WWW.KIMLEY-HORN.COM REGISTRY NO. 35106

SCALE: AS NOTED
DESIGN: JLD
DRAWN: RJG
CHECKED: JLD

LANDSCAPE PLAN

CITY OF ST. PETE BEACH
PUMP STATION 1
REHABILITATION
PINELLAS COUNTY FLORIDA

DATE: DECEMBER 2023

PROJECT NO. 148404075

SHEET NUMBER L-1

LANDSCAPE SPECIFICATIONS

1. SCOPE OF WORK

1.1. THE WORK CONSISTS OF: FURNISHING ALL LABOR, MATERIALS, EQUIPMENT, TOOLS, TRANSPORTATION, AND ANY OTHER APPURTENANCES NECESSARY FOR THE COMPLETION OF THIS PROJECT AS SHOWN ON THESE PLANS.

1.2. WORK SHALL INCLUDE MAINTENANCE AND WATERING OF ALL CONTRACT PLANTING AREAS UNTIL CERTIFICATION OF ACCEPTANCE BY THE OWNER.

1.3. WORK SHALL BE COORDINATED WITH OTHER TRADES TO PREVENT CONFLICTS.

2. PROTECTION OF EXISTING AND PROPOSED SITE ELEMENTS

2.1. PROTECT ALL EXISTING SITE ITEMS, ALREADY COMPLETED OR ESTABLISHED AND DESIGNATED TO REMAIN FROM DAMAGE BY THE CONTRACTOR UNLESS OTHERWISE SPECIFIED. ALL DAMAGE RESULTING FROM THE CONTRACTOR'S WORK SHALL BE REPAIRED OR REPLACED TO THE SATISFACTION OF THE OWNER, AT NO COST TO THE OWNER.

2.2. MAINTAIN ALL NECESSARY BMP DEVICES THROUGHOUT THE DURATION OF ALL CONSTRUCTION ACTIVITIES.

2.3. WHERE APPLICABLE, SUBMIT A DETAILED PROJECT SPECIFIC WORK ZONE TRAFFIC CONTROL PLAN IN ACCORDANCE WITH THE APPROPRIATE REGULATORY AGENCY STANDARDS UNLESS THE WORK REQUIRES NOTHING MORE THAN A DIRECT APPLICATION OF FDOT STANDARD PLANS FOR ROAD AND BRIDGE CONSTRUCTION, INDEX 102-600.

2.4. THE CONTRACTOR SHALL BE RESPONSIBLE FOR LOCATING ALL UTILITIES, WHETHER PUBLIC OR PRIVATE, PRIOR TO CONSTRUCTION ACTIVITIES. THE INFORMATION AND DATA SHOWN WITH RESPECT TO EXISTING UTILITIES IS APPROXIMATE. THE OWNER AND DESIGN PROFESSIONAL SHALL NOT BE RESPONSIBLE FOR THE ACCURACY AND COMPLETENESS OF ANY SUCH INFORMATION OR DATA. THE CONTRACTOR SHALL HAVE FULL RESPONSIBILITY FOR; REVIEWING AND CHECKING ALL SUCH INFORMATION AND DATA; LOCATING ALL UTILITIES PRIOR TO CONSTRUCTION; THE SAFETY AND PROTECTION THEREOF; REPAIRING ANY DAMAGE RESULTING FROM THE WORK. THE COST OF ALL WILL BE CONSIDERED AS HAVING BEEN INCLUDED IN THE CONTRACT PRICE. THE CONTRACTOR SHALL NOTIFY ANY AFFECTED UTILITY COMPANIES OR AGENCIES IN WRITING AT LEAST 48 HOURS PRIOR TO BEGINNING CONSTRUCTION. THE CONTRACTOR SHALL NOTIFY THE LANDSCAPE ARCHITECT IN WRITING WHEN ANY CONFLICT BETWEEN UTILITIES AND THESE PLANS EXIST PRIOR TO PLANTING.

2.5. THE CONTRACTOR SHALL BE RESPONSIBLE FOR ALL UNAUTHORIZED CUTTING OR DAMAGE TO PLANT MATERIAL EXISTING OR OTHERWISE. THIS SHALL INCLUDE COMPACTION AND SPILLING OF ANY DELETERIOUS MATERIALS WITHIN THE DRIP-LINE OF EXISTING TREES TO REMAIN. PLANT MATERIAL KILLED OR DAMAGED THAT IS MISSHAPEN AND/OR UNSIGHTLY SHALL BE REPLACED WITH LIKE SIZE AND KIND TO THE SATISFACTION OF THE OWNER OR REGULATORY AGENCY AT THE COST TO THE CONTRACTOR.

2.6. SEE TREE MITIGATION PLAN AND NOTES, IF APPLICABLE.

3. SUBMITTALS

3.1. SUBMIT MATERIAL SAMPLES LISTED BELOW FOR APPROVAL, ON SITE OR AS DETERMINED BY THE OWNER. UPON APPROVAL, DELIVERY OF MATERIALS MAY COMMENCE.

MATERIAL	SAMPLE SIZE
MULCH	ONE (1) GALLON PLASTIC BAG
SOIL MIXTURE	ONE (1) GALLON PLASTIC BAG
PLANTS	ONE (1) OF EACH VARIETY (OR TAGGED IN NURSERY)

3.2. SUBMIT TESTING RESULTS OF SOIL MIXTURE AS PER SECTION 6 BELOW.

4. PLANT MATERIALS

4.1. ALL PLANT MATERIAL SHALL CONFORM TO THE SPECIFICATIONS INDICATED ON THE DRAWINGS AND SHALL BE IN ACCORDANCE WITH GRADES AND STANDARDS FOR NURSERY PLANTS, LATEST EDITION. PUBLISHED BY THE FLORIDA DEPARTMENT OF AGRICULTURE AND CONSUMER SERVICES. ALL PLANTS SHALL BE FLORIDA GRADE NO. 1 OR BETTER AS DETERMINED BY THE FLORIDA DIVISION OF PLANT INDUSTRY. ALL MATERIALS SHALL BE SUBJECT TO APPROVAL BY THE OWNER OR OWNER'S REPRESENTATIVE. NO SUBSTITUTIONS SHALL BE MADE WITHOUT WRITTEN PERMISSION FROM THE LANDSCAPE ARCHITECT AND OWNER.

4.2. ALL TREE SPECIES INSTALLED SHALL BE MATCHED IN SIZE AND SHAPE UNLESS NOTED OTHERWISE.

4.3. PLANTS SHALL BE SUBJECT TO INSPECTION AND APPROVAL AT THE PLACE OF GROWTH, UPON DELIVERY TO THE SITE, DURING PROGRESS OF THE WORK AND/OR AFTER COMPLETION. REJECTED PLANTS SHALL BE REMOVED AND REPLACED IMMEDIATELY.

5. DIGGING AND HANDLING

5.1. PROTECT ROOTS OR ROOT BALLS OF PLANTS AT ALL TIMES FROM SUN, DRYING WINDS, WATER AND FREEZING, AS NECESSARY UNTIL PLANTING. NO PLANT MATERIAL SHALL BE HANDLED BY STEMS.

6. SOIL MIXTURE (PLANTING MEDIUM, PLANTING MIX, TOPSOIL MIX)

6.1. TEST EXISTING SOIL AND AMEND AS NECESSARY IN ACCORDANCE WITH THE GUIDELINES BELOW:

6.2. SOIL MIXTURE (PLANTING MEDIUM FOR PLANT PITS) SHALL CONSIST OF TWO PARTS OF TOPSOIL AND ONE PART SAND, AS DESCRIBED BELOW. SUBMIT SAMPLES AND PH TESTING RESULTS OF SOIL MIXTURE FOR OWNER'S REPRESENTATIVE APPROVAL PRIOR TO PLANT INSTALLATION OPERATIONS COMMENCE.

6.3. TOPSOIL FOR USE IN PREPARING SOIL MIXTURE FOR BACKFILLING PLANT PITS SHALL BE FERTILE, FRIABLE, AND OF A LOAMY CHARACTER; REASONABLY FREE OF SUBSOIL, CLAY LUMPS, BRUSH WEEDS AND OTHER LITTER; FREE OF ROOTS, STUMPS, STONES LARGER THAN 2" IN ANY DIRECTION, AND OTHER EXTRANEOUS OR TOXIC MATTER HARMFUL TO PLANT GROWTH. IT SHALL CONTAIN THREE (3) TO FIVE (5) PERCENT DECOMPOSED ORGANIC MATTER AND HAVE A PH BETWEEN 5.5 AND 7.0.

6.4. SAND SHALL BE COARSE, CLEAN, WELL-DRAINING, NATIVE SAND.

6.5. PLANT TREES IN THE EXISTING NATIVE SOIL ON SITE, UNLESS DETERMINED TO BE UNSUITABLE - AT WHICH POINT THE CONTRACTOR SHALL CONTACT OWNER'S REPRESENTATIVE TO DISCUSS ALTERNATE RECOMMENDATION PRIOR TO PLANTING.

6.6 TREES PLANTED IN TREE WELLS SHALL RECEIVE STRUCTURAL URBAN SOIL. MIX SHALL BE : 50% SAND, 20% PERLITE, 20% PINES FINES AND 10% ORGANIC SOIL.

7. WATER

7.1. PROVIDE WATER NECESSARY FOR PLANTING ESTABLISHMENT AND MAINTENANCE. WATER SHALL BE OF SATISFACTORY QUALITY TO SUSTAIN ADEQUATE PLANT GROWTH AND SHALL NOT CONTAIN HARMFUL, NATURAL OR MAN-MADE ELEMENTS DETRIMENTAL TO PLANTS.

7.2. WATERING/IRRIGATION RESTRICTIONS MAY APPLY - REFER TO PROPERTY'S JURISDICTIONAL AUTHORITY.

8. FERTILIZER

8.1. PROVIDE FERTILIZER APPLICATION SCHEDULE TO OWNER, AS APPLICABLE TO SOIL TYPE, PLANT INSTALLATION TYPE, AND SITE'S PROPOSED USE. SUGGESTED FERTILIZER TYPES SHALL BE ORGANIC OR OTHERWISE NATURALLY-DERIVED.

8.2. FERTILIZER RESTRICTIONS MAY APPLY - REFER TO PROPERTY'S JURISDICTIONAL AUTHORITY.

9. MULCH

9.1. MOISTEN MULCH MATERIAL AT THE TIME OF APPLICATION TO PREVENT WIND DISPLACEMENT, AND APPLIED AT A MINIMUM DEPTH OF THREE (3) INCHES. CONTRACTOR SHALL CLEAR MULCH FROM WITHIN A SIX (6) INCH RADIUS AROUND TRUNK / STEM FLARE. MULCH SHALL BE "FLORIMULCH", EUCALYPTUS MULCH, OR SIMILAR SUSTAINABLY HARVESTED MULCH UNLESS SPECIFIED OTHERWISE.

9.2. PROVIDE A THREE (3) INCH MINIMUM LAYER OF SPECIFIED MULCH OVER THE ENTIRE AREA OF EACH PLANTING BED AND TREE RING (SIX (6) FOOT DIAMETER MINIMUM).

10. CONTAINER GROWN STOCK

10.1. CONTAINER GROWN PLANTS SHALL HAVE BEEN GROWN IN IT'S CONTAINER SUFFICIENTLY LONG ENOUGH FOR THE NEW FIBROUS ROOTS TO HAVE DEVELOPED SO THAT THE ROOT MASS WILL RETAIN ITS SHAPE AND HOLD TOGETHER WHEN REMOVED FROM THE CONTAINER.

10.2. INSUFFICIENT OR POORLY STRUCTURED ROOT SYSTEMS ARE NOT ACCEPTABLE AND WILL BE REJECTED.

10.3. ROOTS PLUS GROWER (RPG) PRODUCTS SHALL BE USED WHERE SPECIFIED.

11. MATERIALS LIST

11.1. ALL QUANTITIES ARE PROVIDED FOR CONVENIENCE ONLY. CONTRACTOR SHALL CONFIRM ALL QUANTITIES PER PLAN PRIOR TO BIDDING AND CONSTRUCTION.

12. FINE GRADING

12.1. THE CONTRACTOR SHALL BE RESPONSIBLE FOR FINE GRADING WHICH CONSISTS OF FINAL FINISHED GRADING (INCLUDING ADDITIONAL SOIL MIXTURE AS NEEDED) FOR LAWN AND PLANTING AREAS THAT HAVE BEEN ROUGH GRADED BY OTHERS. FINISH GRADE SHALL ACCOUNT FOR THICKNESS OF SOD AND/OR MULCH DEPTH.

12.2. ALL PLANTING AREAS SHALL BE GRADED AND MAINTAINED FOR POSITIVE DRAINAGE TO SURFACE/SUBSURFACE STORM DRAIN SYSTEMS. AREAS ADJACENT TO BUILDINGS SHALL SLOPE AWAY FROM THE BUILDINGS. REFER TO CIVIL ENGINEER'S PLANS FOR FINAL GRADES, IF APPLICABLE.

13. PLANTING PROCEDURES

13.1. CLEAN WORK AND SURROUNDING AREAS OF ALL RUBBISH OR OBJECTIONABLE MATTER DAILY. REMOVE ALL MORTAR, CEMENT, AND TOXIC MATERIAL FROM THE SURFACE OF ALL PLANT BEDS. DO NOT MIX THESE MATERIALS WITH THE SOIL. SHOULD THE CONTRACTOR FIND SUCH SOIL CONDITIONS BENEATH THE SOIL WHICH WILL IN ANY WAY ADVERSELY AFFECT THE PLANT GROWTH, IMMEDIATELY CALL IT TO THE ATTENTION OF THE OWNER'S REPRESENTATIVE.

13.2. LOCATE, MAINTAIN AND PROTECT ALL UTILITIES ABOVE AND BELOW GROUND. CALL SUNSHINE STATE ONE CALL OF FLORIDA, INC. (811) TO LOCATE UTILITIES AT LEAST 48 HOURS PRIOR TO CONSTRUCTION.

13.3. NOTIFY LANDSCAPE ARCHITECT IN WRITING IMMEDIATELY IF CONFLICT(S) EXIST WITH PROPOSED TREE LOCATIONS AND EXISTING OVERHEAD POWER LINES IN ACCORDANCE WITH SETBACK REQUIREMENTS OF FPL'S "RIGHT TREE, RIGHT PLACE" PROGRAM. CONSULT THE UNIVERSITY OF FLORIDA'S "TREES AND POWER LINE" WEBSITE FOR TREE SIZE CATEGORIES.

13.4. NOTIFY LANDSCAPE ARCHITECT IN WRITING IMMEDIATELY IF CONFLICT(S) EXIST WITH PROPOSED TREE LOCATIONS AND EXISTING / PROPOSED LIGHT POLES. TREES INSTALLED IN CONFLICT WITH LIGHT POLES ARE SUBJECT TO RELOCATION AT THE EXPENSE OF THE CONTRACTOR.

13.5. REMOVE ALL EXISTING AND IMPORTED DELETERIOUS MATERIAL AND SUB-BASE FROM ALL LANDSCAPE PLANTING AREAS TO A MINIMUM DEPTH OF 36" OR TO NATIVE SOIL. CONTRACTOR IS RESPONSIBLE TO BACKFILL THESE PLANTING AREAS TO ROUGH FINISHED GRADE AS NEEDED WITH CLEAN SOIL MIXTURE.

13.6. FURNISH NURSERY'S CERTIFICATE OF COMPLIANCE WITH ALL APPLICABLE REQUIREMENTS. COMPLY WITH APPLICABLE FEDERAL, STATE, COUNTY, AND LOCAL REGULATIONS GOVERNING LANDSCAPE MATERIALS AND WORK.

13.7. EXCAVATE ALL PLANTING PITS IN ACCORDANCE WITH LANDSCAPE DETAILS PROVIDED. TEST ALL TREE PITS WITH WATER BEFORE PLANTING TO ASSURE PROPER DRAINAGE PERCOLATION IS AVAILABLE. IF POOR DRAINAGE EXISTS, NOTIFY LANDSCAPE ARCHITECT IMMEDIATELY IN WRITING. NO ALLOWANCE WILL BE MADE FOR LOST PLANTS DUE TO IMPROPER DRAINAGE. CONTRACTOR SHALL ENSURE ELIMINATION OF ALL AIR POCKETS AROUND ROOTS.

13.8. SET TREES AND SHRUBS STRAIGHT AT AN ELEVATION THAT, AFTER SETTLEMENT, THE PLANT CROWN WILL STAND ONE (1) TO TWO (2) INCHES ABOVE GRADE. EACH PLANT SHALL BE SET IN THE CENTER OF THE PIT. PLANTING SOIL MIXTURE SHALL BE BACK FILLED, THOROUGHLY TAMPED AROUND THE BALL, AND SETTLED BY WATER (AFTER TAMPING).

13.9. DO NOT COVER TOP OF BALL WITH SOIL MIXTURE. ALL BURLAP, ROPE, WIRES, BASKETS, ETC., SHALL BE REMOVED FROM UPPER ONE THIRD (1/3) OF ROOT BALLS.

13.10. ALL SUCKER GROWTH AND BROKEN OR BADLY DAMAGED BRANCHES SHALL BE REMOVED WITH A CLEAN CUT IN ACCORDANCE WITH ANSI A-300.

13.11. SHRUBS AND GROUND COVER PLANTS SHALL BE SPACED IN ACCORDANCE WITH THE DRAWINGS, LANDSCAPE DETAILS AND AS INDICATED ON THE PLANT LIST.

13.12. TREE GUYING AND BRACING SHALL BE INSTALLED BY THE CONTRACTOR IN ACCORDANCE WITH THE PLANS TO INSURE STABILITY AND MAINTAIN TREES IN A PLUMB AND UPRIGHT POSITION.

13.13. FAILURE TO FOLLOW THE ABOVE PLANTING PROCEDURE SHALL MAKE THE CORRECTIVE MEASURES THE RESPONSIBILITY OF THE CONTRACTOR.

14. LAWN SODDING

14.1. THE WORK CONSISTS OF LAWN BED PREPARATION, SOIL PREPARATION, AND SODDING NECESSARY TO PRODUCE A TURF GRASS LAWN ACCEPTABLE TO THE OWNER.

14.2. ALL AREAS THAT ARE TO BE SODDED SHALL BE CLEARED OF ANY ROUGH GRASS, WEEDS, AND DEBRIS TO A MINIMUM DEPTH OF THREE (3) INCHES. PROVIDE ONE (1) INCH OF TOPSOIL ACROSS ENTIRE LAWN BED AND MIX THROUGHLY INTO TOP FOUR (4) INCHES OF SOIL TO BRING THE GROUND TO AN EVEN GRADE. THE ENTIRE SURFACE SHALL BE ROLLED WITH A ROLLER WEIGHING NOT MORE THAN ONE-HUNDRED (100) POUNDS PER FOOT OF WIDTH. DURING THE ROLLING, ALL DEPRESSIONS CAUSED BY SETTLEMENT SHALL BE FILLED WITH ADDITIONAL TOPSOIL AND THE SURFACE SHALL BE REGRADED AND ROLLED UNTIL PRESENTING A SMOOTH AND EVEN FINISH TO THE REQUIRED GRADE.

14.3. HAND RAKE LAWN BED UNTIL ALL BUMPS AND DEPRESSIONS ARE REMOVED. WET PREPARED AREA THOROUGHLY.

14.4. SOD ALL AREAS THAT ARE NOT PAVED OR PLANTED AS DESIGNATED ON THE DRAWINGS WITHIN THE CONTRACT LIMITS, UNLESS SPECIFICALLY NOTED OTHERWISE.

14.5. THE SOD SHALL BE CERTIFIED TO MEET FLORIDA STATE PLANT BOARD SPECIFICATIONS, ABSOLUTELY TRUE TO VARIETAL TYPE, AND FREE FROM WEEDS, FUNGUS, INSECTS AND DISEASE OF ANY KIND.

14.6. SOD PANELS SHALL BE LAID TIGHTLY TOGETHER SO AS TO MAKE A SOLID SODDED LAWN AREA. SOD SHALL BE LAID UNIFORMLY AGAINST THE EDGES OF ALL CURBS AND OTHER HARDSCAPE ELEMENTS, PAVED AND PLANTED AREAS.

14.7. IMMEDIATELY FOLLOWING SOD LAYING, ROLL LAWN AREAS WITH A LAWN ROLLER AND THEN THOROUGHLY IRRIGATED.

14.8. IF, IN THE OPINION OF THE OWNER, TOP-DRESSING IS NECESSARY AFTER ROLLING TO FILL THE VOIDS BETWEEN THE SOD PANELS AND TO EVEN OUT INCONSISTENCIES IN THE SOD, CLEAN SAND, AS APPROVED BY THE OWNER'S REPRESENTATIVE, SHALL BE UNIFORMLY SPREAD OVER THE ENTIRE SURFACE OF THE SOD AND THOROUGHLY WATERED IN. FERTILIZE INSTALLED SOD AS ALLOWED BY PROPERTY'S JURISDICTIONAL AUTHORITY.

14.9. DURING DELIVERY, PRIOR TO, AND DURING THE PLANTING OF THE LAWN AREAS, THE SOD PANELS SHALL AT ALL TIMES BE PROTECTED FROM EXCESSIVE DRYING AND UNNECESSARY EXPOSURE OF THE ROOTS TO THE SUN. ALL SOD SHALL BE STACKED SO AS NOT TO BE DAMAGED BY EXCESSIVE HEAT AND MOISTURE.

14.10. WITHIN THE CONTRACT LIMITS, PRODUCE AND MAINTAIN A DENSE, WELL ESTABLISHED LAWN. THE CONTRACTOR SHALL BE RESPONSIBLE FOR THE REPAIR AND RE-SODDING OF ALL ERODED, SUNKEN OR BARE SPOTS UNTIL CERTIFICATION OF ACCEPTANCE BY THE OWNER'S REPRESENTATIVE. REPAIRED SODDING SHALL BE ACCOMPLISHED AS IN THE ORIGINAL WORK (INCLUDING REGRADING IF NECESSARY).

15. CLEANUP

15.1. UPON COMPLETION OF ALL PLANTING WORK AND BEFORE FINAL ACCEPTANCE, REMOVE ALL MATERIAL, EQUIPMENT, AND DEBRIS RESULTING FROM HIS WORK. ALL PAVED AREAS SHALL BE CLEANED AND THE SITE LEFT IN A NEAT AND ACCEPTABLE CONDITION AS APPROVED BY THE OWNER'S REPRESENTATIVE.

16. PLANT MATERIAL MAINTENANCE

16.1. ALL PLANT MATERIAL SHALL BE MAINTAINED BY WATERING, CULTIVATING, SPRAYING, AND ALL OTHER OPERATIONS (SUCH AS RE-STAKING OR REPAIRING GUY SUPPORTS) AS NECESSARY TO INSURE HEALTHY AND VIGOROUS GROWING CONDITIONS BY THE CONTRACTOR UPON DELIVERING TO THE SITE AND UNTIL FINAL ACCEPTANCE OF WORK.

17. FINAL INSPECTION AND ACCEPTANCE OF WORK

17.1. ALL PLANT BEDS SHALL BE KEPT FREE OF NOXIOUS WEEDS UNTIL FINAL ACCEPTANCE OF WORK. PRIOR TO FINAL INSPECTION, TREAT ALL PLANTING BEDS WITH AN APPROVED PRE-EMERGENT HERBICIDE PER MANUFACTURER RECOMMENDATIONS. (AS ALLOWED BY JURISDICTIONAL AUTHORITY)

17.2. PROVIDE WATERING/IRRIGATION SCHEDULE FOR ALL PLANT MATERIAL TO OWNER. OBSERVE ALL APPLICABLE WATERING RESTRICTIONS AS SET FORTH BY THE PROPERTY'S JURISDICTIONAL AUTHORITY.

17.3. UPON COMPLETION OF ALL WORK, A FINAL INSPECTION SHALL BE PERFORMED BY THE OWNER AND/OR OWNER'S REPRESENTATIVE. ALL PLANTING, CONSTRUCTION AND ALL OTHER INCIDENTAL WORK PERTAINING TO THIS CONTRACT SHALL BE INSPECTED FOR COMPLIANCE WITH THE CONTRACT DOCUMENTS. ANY ITEMS FOUND TO NOT BE IN COMPLIANCE SHALL BE CORRECTED AT THE COST OF THE CONTRACTOR.

18. WARRANTY

18.1. THE LIFE AND SATISFACTORY CONDITION OF ALL PLANT MATERIAL INSTALLED BY THE LANDSCAPE CONTRACTOR SHALL BE WARRANTED BY THE CONTRACTOR FOR A MINIMUM OF ONE (1) CALENDAR YEAR COMMENCING AT THE TIME OF CERTIFICATION AND ACCEPTANCE OF THE WORK BY THE OWNER AND/OR OWNER'S REPRESENTATIVE.

18.2. ANY PLANT NOT FOUND IN A HEALTHY GROWING CONDITION THROUGHOUT THE WARRANTY PERIOD SHALL BE REMOVED FROM THE SITE AND REPLACED AS SOON AS WEATHER CONDITIONS PERMIT. ALL REPLACEMENTS SHALL BE PLANTS OF THE SAME KIND AND SIZE AS SPECIFIED IN THE PLANT LIST. THEY SHALL BE FURNISHED, PLANTED AND MULCHED AS SPECIFIED AT NO ADDITIONAL COST TO THE OWNER. ANY REPLACED PLANT MATERIAL SHALL BE SUBJECT TO A NEW ONE (1) YEAR WARRANTY.

18.3. IN THE EVENT THE OWNER DOES NOT CONTRACT WITH THE CONTRACTOR FOR LANDSCAPE AND IRRIGATION MAINTENANCE, THE CONTRACTOR SHOULD VISIT THE PROJECT SITE PERIODICALLY DURING THE ONE (1) YEAR WARRANTY PERIOD TO EVALUATE MAINTENANCE PROCEDURES BEING PERFORMED BY THE OWNER. CONTRACTOR SHALL NOTIFY THE OWNER IN WRITING OF MAINTENANCE PROCEDURES OR CONDITIONS WHICH THREATEN VIGOROUS AND HEALTHY PLANT GROWTH.

19. ABBREVIATIONS

B&B -	BALLED AND BURLAPPED
BR -	BARE ROOT
CAL -	CALIPER
CT -	CLEAR TRUNK
DBH -	DIAMETER AT BREAST HEIGHT
FG -	FIELD GROWN
FTG -	FULL TO GROUND
GW -	GREY WOOD
HO -	HARDENED OFF
OA -	OVERALL HEIGHT
RPG -	ROOTS PLUS GROWER

CALL 2 WORKING DAYS BEFORE YOU DIG

IT'S THE LAW! DIAL 811

811 Know what's below. Call before you dig.

SUNSHINE STATE ONE CALL OF FLORIDA, INC.

No.	Revisions	Date	By

Kimley»Horn

© 2023 KIMLEY-HORN AND ASSOCIATES, INC.
200 CENTRAL AVE., SUITE 600
ST. PETERSBURG, FL 33701
P: 727 547 3999
WWW.KIMLEY-HORN.COM REGISTRY NO. 35106

SCALE: AS NOTED
DESIGN: JLD
DRAWN: RJG
CHECKED: JLD

LANDSCAPE NOTES

CITY OF ST. PETE BEACH
PUMP STATION 1
REHABILITATION
PINELLAS COUNTY FLORIDA

DATE: DECEMBER 2023

PROJECT NO. 148404075

SHEET NUMBER L-2

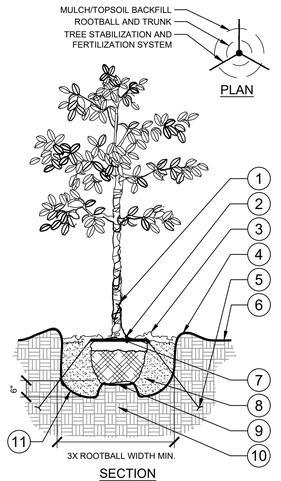

1. TRUNK/ROOT BALL TO BE CENTERED AND PLUMB/LEVEL IN PLANTING PIT.
2. 6" DIA. CLEAR OF MULCH AT TRUNK FLARE.
3. 3" MINIMUM MULCH AS SPECIFIED. WHERE TREES ARE PLACED IN SOD, MULCH RING FOR TREES SHALL BE 6' DIAMETER (MIN.) OR AS DIRECTED BY OWNER'S REPRESENTATIVE.
4. 4" HIGH BERM, FIRMLY COMPACTED.
5. ANCHOR SYSTEM INSTALLED PER MANUFACTURER'S RECOMMENDATIONS.
6. FINISHED GRADE. (SEE GRADING PLAN)
7. TOP OF ROOTBALL MIN. 1" ABOVE FINISHED GRADE.
8. PREPARED PLANTING SOIL AS SPECIFIED.
9. TOP OF ROOTBALL SHALL BE 1" ABOVE FINISHED GRADE. ROOTBALLS GREATER THAN 24" DIAMETER SHALL BE PLACED ON MOUND OF UNDISTURBED SOIL TO PREVENT SETTLING. ROOTBALLS SMALLER THAN 24" IN DIAMETER MAY SIT ON COMPACTED EARTH.
10. UNDISTURBED NATIVE SOIL.
11. SCARIFY BOTTOM AND SIDES OF PLANTING PIT.

NOTES:

A. FINAL TREE STAKING DETAILS AND PLACEMENT TO BE APPROVED BY OWNER.

B. REMOVE BURLAP, WIRE AND STRAPS (ANYTHING THAT COULD GIRDLE TREE OR RESTRICT ROOT GROWTH) ON UPPER 1/3 OF ROOTBALL.

C. PRUNE ALL TREES IN ACCORDANCE WITH ANSI A-300.

1 / L-3 TREE PLANTING

SECTION / PLAN — P-BO1-19

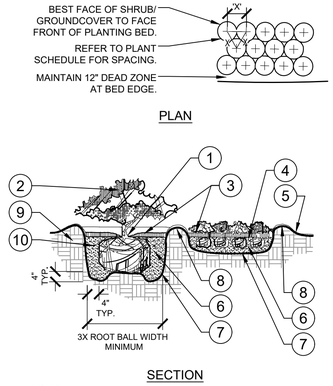

1. TOP OF SHRUB ROOTBALLS TO BE PLANTED 1" - 2" HIGH WITH SOIL MOUNDING UP TO THE TOP OF ROOTBALL.
2. PRUNE ALL SHRUBS TO ACHIEVE A UNIFORM MASS/HEIGHT.
3. 3" MULCH LAYER AS SPECIFIED.
4. EXCAVATE ENTIRE BED SPECIFIED FOR GROUNDCOVER BED.
5. FINISHED GRADE (SEE GRADING PLAN).
6. PREPARED PLANTING SOIL AS SPECIFIED. (SEE LANDSCAPE NOTES) NOTE: WHEN GROUND-COVERS AND SHRUBS USED IN MASSES, ENTIRE BED TO BE AMENDED WITH PLANTING SOIL MIX AS SPECIFIED.
7. SCARIFY OF PLANTING PIT SIDES AND BOTTOM.
8. 4" HIGH BERM FIRMLY COMPACTED.
9. UNDISTURBED NATIVE SOIL.
10. FERTILIZER TABLETS (MAX 3" DEEP)

NOTES:

A. CONTRACTOR SHALL ASSURE PERCOLATION OF ALL PLANTING PITS PRIOR TO INSTALLATION.

B. WHEN SHRUBS ARE PRUNED IN MASSES, PRUNE ALL SHRUBS TO ACHIEVE UNIFORM MASS / HEIGHT.

C. ALL SHRUBS AND GROUNDCOVERS SHALL BE PLUMB VERTICALLY, UNLESS OTHERWISE DIRECTED BY OWNERS REPRESENTATIVE.

2 / L-3 SHRUB/GROUNDCOVER PLANTING

SECTION / PLAN — NTS — P-BO1-01

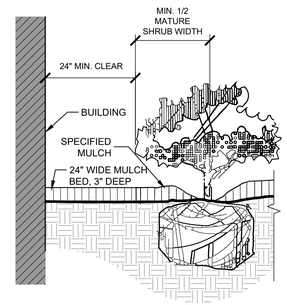

NOTES:

1. CLEAR ZONE: 36" MIN. FROM BUILDING TO CENTER OF NEAREST SHRUB.
2. INSTALL SPECIFIED MULCH: 24" MIN. FROM BUILDING. SPECIFIED MULCH TO BE INSTALLED AT A DEPTH OF 3" (MIN.)

3 / L-3 PLANTINGS ADJACENT TO BUILDINGS

SECTION — NTS — P-BO1-06

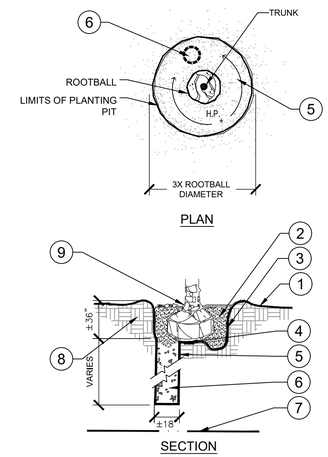

1. FINISH GRADE (SEE GRADING PLANS).
2. BACKFILL WITH PREPARED PLANTING SOIL MIX AS SPECIFIED.
3. FILTER CLOTH, MIRAFI 500X OR BETTER.
4. SLOPE BOTTOM TO DRAIN.
5. AUGURED HOLE Ø ±18" PENETRATE THROUGH OCCLUDING LAYER TO WATER TABLE OR TO A DEPTH OF 7' TO ASSURE PROPER PERCOLATION.
6. BACKFILL WITH 1/2" - 3/4" GRAVEL TO REQUIRED DEPTH THROUGH OCCLUDING LAYER TO ASSURE PROPER PERCOLATION.
7. WATER TABLE. (DEPTH VARIES)
8. UNDISTURBED NATIVE SOIL.
9. SET ROOTBALL ON UNDISTURBED STABLE SUBSOIL SO THAT TOP OF ROOT BALL IS 1" ABOVE FINISHED GRADE.

NOTES:

A. THIS DETAIL SHALL BE IMPLEMENTED WHERE PERCOLATION RATES ARE 2" PER HOUR OR LESS.

B. CONTRACTOR TO PERFORM PERCOLATION TEST AS REQUIRED. AND NOTIFY OWNER/LANDSCAPE ARCHITECT.

C. SEE TYPICAL TREE PLANTING DETAIL THIS SHEET FOR PLANT STAKING.

4 / L-3 POOR DRAINAGE CONDITION

SECTION / PLAN — NTS — P-BO1-09

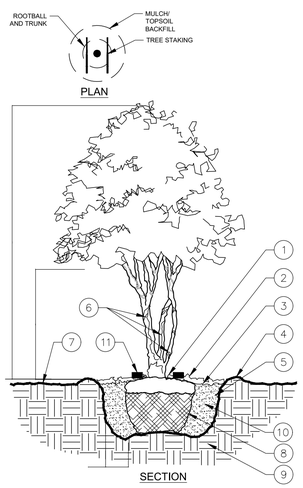

1. BASE OF TREE SHALL BE PLANTED SLIGHTLY ABOVE (1" MIN.) ADJACENT FINISH GRADE. REMOVE ALL TWINE & STRAPS & CUT BURLAP FROM TOP 1/3 OF ROOT BALL. NO SYNTHETIC BURLAP WILL BE ACCEPTED.
2. 4" SHREDDED HARDWOOD MULCH OR APPROVED EQUAL.
3. DIAMETER OF TREE PIT TO BE TWICE THE DIAMETER OF ROOT BALL-ROUGHEN SIDES OF TREE PIT.
4. 3" HIGH SOIL BERM TO HOLD WATER.
5. TOPSOIL MIX BACKFILL.
6. TREE WRAP.
7. 4" MIN. OF TOPSOIL TO BRING TO FINISHED GRADE (SEE GRADING PLAN).
8. ROOT BALLS GREATER THAN 24" DIAMETER SHALL BE PLACED ON MOUND OF UNDISTURBED SOIL TO PREVENT SETTLING ROOT BALLS SMALLER THAN 24" IN DIA. MAY SIT ON COMPACTED EARTH.
9. UNDISTURBED SUBSOIL.
10. PREPARE PLANTING SOIL AS SPECIFIED.
11. **Tree Frog® RBK40pt** FOR UP TO 4" TREE CALIPER OR **Tree Frog® RBK60pt** FOR GREATER THAN 4" AND UP TO 6" TREE CALIPER. REFER TO SITEWORK SPECIFICATIONS FOR APPROVED MATERIALS AND INSTALLATION REQUIREMENTS.

NOTES:

A. FINAL TREE STAKING DETAILS AND PLACEMENT TO BE APPROVED BY OWNER.

B. SET TREE AT ORIGINAL DEPTH, REMOVE BURLAP, WIRE AND STRAPS (ANYTHING THAT COULD GIRDLE TREE OR RESTRICT ROOT GROWTH) ON UPPER 1/3 OF ROOTBALL.

C. SEE LANDSCAPE NOTES FOR THE TYPE OF MULCH MATERIAL TO USE.

D. PRUNE TREE AS DIRECTED BY LANDSCAPE ARCHITECT

E. ASSURE PERCOLATION OF ALL PLANTING PITS

5 / L-3 MULTI-TRUNK TREE PLANTING

SECTION — NTS — P-BO1-29

CALL 2 WORKING DAYS BEFORE YOU DIG

IT'S THE LAW! DIAL 811

811 Know what's below. Call before you dig.

SUNSHINE STATE ONE CALL OF FLORIDA, INC.

No.	Revisions	Date	By

Kimley»Horn

© 2023 KIMLEY-HORN AND ASSOCIATES, INC.
200 CENTRAL AVE., SUITE 600
ST. PETERSBURG, FL 33701
P: 727 547 3999
WWW.KIMLEY-HORN.COM REGISTRY NO. 35106

SCALE: AS NOTED
DESIGN: JLD
DRAWN: RJG
CHECKED: JLD

LANDSCAPE DETAILS

CITY OF ST. PETE BEACH
PUMP STATION 1 REHABILITATION
PINELLAS COUNY FLORIDA

DATE: DECEMBER 2023

PROJECT NO. 148404075

SHEET NUMBER L-3

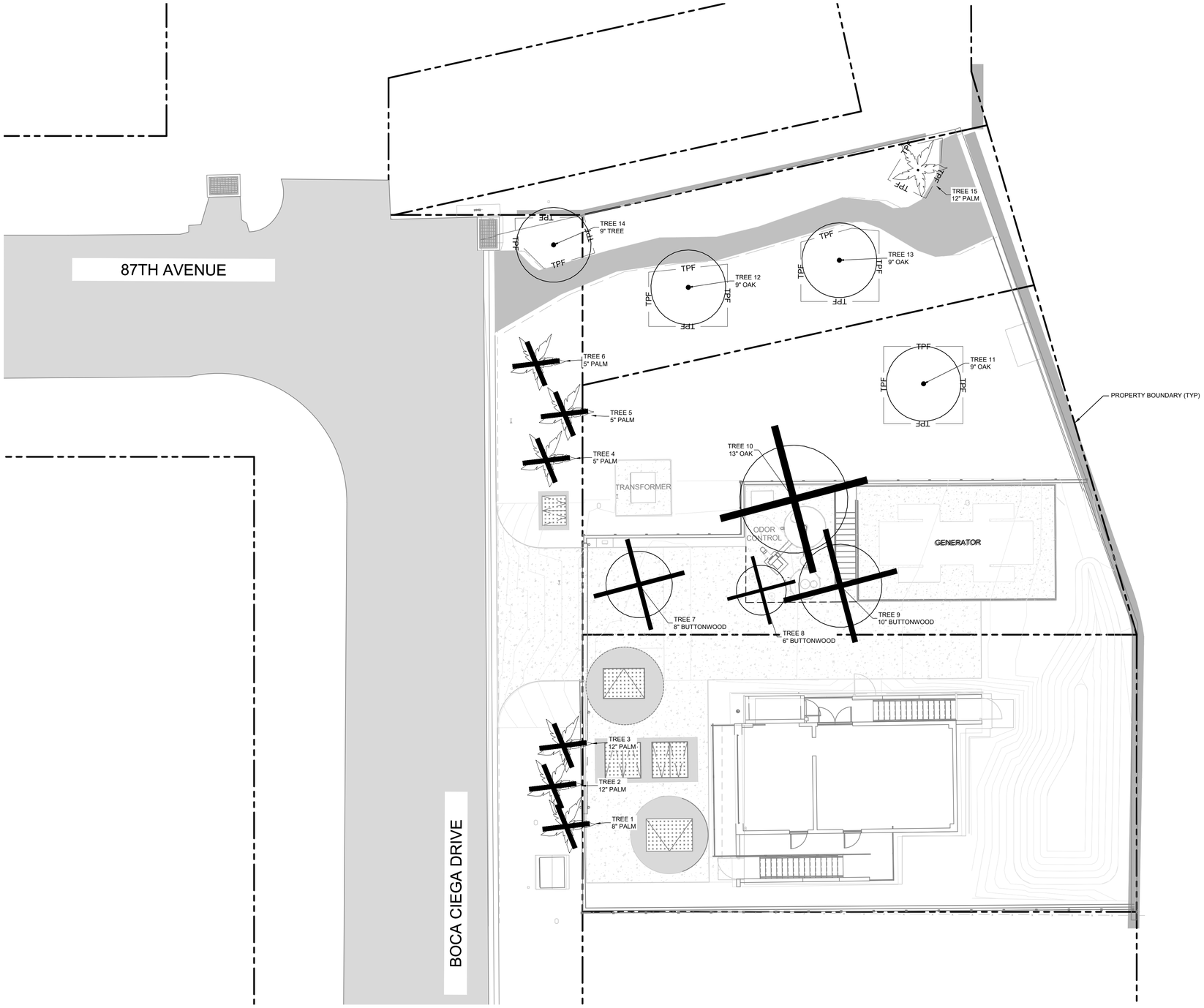

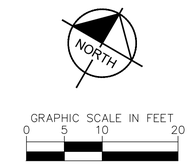

TREES PRESERVED	QUANTITY	MULTIPLIER	TOTAL
4" - 10" DBH	4	1	4
10" -20" DBH	0	2	0
> 20" DBH	0	3	0
TOTAL TREE PRESERVATION CREDITS			4
TREES REMOVED	**QUANTITY**	**MULTIPLIER**	**TOTAL**
< 4" DBH	0	1	0
> 4" DBH	4	2	8
TOTAL REPLACEMENT TREES REQUIRED			8
TOTAL REPLACEMENT TREES PROVIDED			

TREE DATA TABLE

TREE NUMBER	SPECIES	DBH	STATUS
1	PALM	8	REMOVE
2	PALM	12	REMOVE
3	PALM	12	REMOVE
4	PALM	5	REMOVE
5	PALM	5	REMOVE
6	PALM	5	REMOVE
7	BUTTONWOOD	8	REMOVE
8	BUTTONWOOD	6	REMOVE
9	BUTTONWOOD	10	REMOVE
10	OAK	13	REMOVE
11	OAK	9	PRESERVE
12	OAK	9	PRESERVE
13	OAK	9	PRESERVE
14	BUTTONWOOD	9	PRESERVE
15	PALM	12	PRESERVE

SYMBOL KEY:

- EXISTING TREE TO BE PRESERVED
- EXISTING TREE TO BE REMOVED
- EXISTING PALM TO BE PRESERVED
- EXISTING PALM TO BE REMOVED
- TPF — TREE PROTECTION FENCING

CALL 2 WORKING DAYS BEFORE YOU DIG

IT'S THE LAW! DIAL 811

811 Know what's below. Call before you dig.

SUNSHINE STATE ONE CALL OF FLORIDA, INC.

No.	Revisions	Date	By

Kimley»Horn

© 2023 KIMLEY-HORN AND ASSOCIATES, INC.
200 CENTRAL AVE, SUITE 600
ST. PETERSBURG, FL 33701
P: 727 547 3999
WWW.KIMLEY-HORN.COM REGISTRY NO. 35106

SCALE: AS NOTED
DESIGN: JLD
DRAWN: RJG
CHECKED: JLD

TREE MITIGATION PLAN

CITY OF ST. PETE BEACH
PUMP STATION 1
REHABILITATION
PINELLAS COUNY FLORIDA

DATE: DECEMBER 2023

PROJECT NO. 148404075

SHEET NUMBER TM-1

TREE MITIGATION SPECIFICATIONS

A. GENERAL

1. CONTRACTOR SHALL ADHEAR TO ALL TREE PROTECTION REQUIREMENTS LISTED IN THESE SPECIFICATIONS AND/OR THOSE LISTED IN THE CITY OR COUNTY ZONNING CODE, TREE PROTECTION (LATEST EDITION). WHICHEVER IS MORE STRINGENT SHALL APPLY.

2. ANY AREAS SUBJECT TO EROSION MUST BE ADEQUATELY STABILIZED WITH VEGETATION MATERIAL THAT WILL, WITHIN A REASONABLE TIME FRAME, DETER SOIL DISTURBANCE.

3. NO SIGNS, BUILDING PERMITS, WIRES OR OTHER ATTACHMENTS OF ANY KIND SHALL BE ATTACHED TO ANY TREE OR PALM. GUY WIRES DESIGNED TO PROTECT TREES ARE EXCLUDED FROM THIS PROHIBITION.

4. EXISTING TREE LOCATIONS AND SIZES ARE ESTIMATES AND ARE BASED ON A SURVEY PROVIDED BY THE OWNER SELECTED SURVEYOR.

5. CONTRACTOR SHALL COORDINATE TREE REMOVAL WITH PERMITTING AGENCY AND PROJECT ARBORIST PRIOR TO CONSTRUCTION. NO PERSON MAY REMOVE OR CAUSE TO BE REMOVED ANY PROTECTED TREE OR PALM WITHOUT FIRST HAVING PROCURED A PERMIT AS PROVIDED BY THE APPROPRIATE PERMITTING AGENCY.

6. FOR PROTECTED TREES OR PALMS BEING REMOVED, THE CONTRACTOR MUST GIVE THE PERMITTING AGENCY REASONABLE OPPORTUNITY TO RELOCATE TREES DESIGNATED FOR REMOVAL TO ANOTHER SITE AT THE PERMITTING AGENCY'S EXPENSE.

7. CONTRACTOR IS RESPONSIBLE FOR POSSESSING ALL REQUIRED APPLICATOR LICENSES, BUSINESS REGISTRATIONS AND INSURANCE, PESTICIDE LABELS, AND MATERIAL DATA SAFETY SHEETS. THE CONTRACTOR IS ALSO RESPONSIBLE FOR HAVING ALL SPILL CONTAINMENT MATERIALS AND REQUIRED PERSONAL PROTECTIVE EQUIPMENT FOR PESTICIDE APPLICATIONS AND ACCIDENTAL SPILLS ON SITE AT ALL TIMES. THE OWNER RESERVES THE RIGHT TO INSPECT EACH APPLICATOR AND HAVE THESE MATERIALS PRESENTED BEFORE AND DURING ANY PESTICIDE TREATMENT.

8. WHERE TRAFFIC AREAS ARE PROPOSED WITHIN THE DRIP LINE OF PROTECTED TREES AND LESS THAN FOUR (4) INCHES OF GRADE CHANGE ARE PROPOSED, PERMEABLE SURFACES THAT ALLOW AIR AND WATER INTO THE SOIL SHOULD BE USED IN LIEU OF ASPHALT OR OTHER SUCH IMPERVIOUS SURFACES.

9. TREE WELLS OF AN APPROVED DESIGN SHALL BE CONSTRUCTED AROUND ALL TREES TO BE PRESERVED WHEN MORE THAN FOUR INCHES OF FILL IS TO BE DEPOSITED WITHIN THE DRIP LINE AREA OF THOSE TREES. COORDINATE WITH PROJECT ARBORIST.

10. THE SEQUENCE OF TREE MITIGATION AND PRESERVATION MEASURES IS IMPERATIVE TO THE HEALTH AND SURVIVABILITY OF THE SUBJECT TREES AND SHALL BE COORDINATED WITH THE OWNER SELECTED PROJECT ARBORIST. THE DESIRED SEQUENCE IS OUTLINED BELOW:

    a. TREE PROTECTION FENCING.

    b. ROOT PRUNING AND ROOT BARRIERS.

    c. CLEARING.

    d. TREE CANOPY PRUNING.

    e. FERTILIZATION.

    f. INSECTICIDE.

    g. IRRIGATION.

B. TREE PROTECTION FENCING

1. PRIOR TO THE ERECTION OF ANY TREE PROTECTION FENCING, ALL FOREIGN SURFACE MATERIAL, TRASH OR DEBRIS SHALL BE REMOVED FROM THE AREA TO BE ENCLOSED BY THE FENCING. AFTER ERECTION OF THE FENCING NO SUCH MATERIAL OR LITTER SHALL BE PERMITTED TO REMAIN WITHIN THE PROTECTED AREA.

2. TREE PROTECTION FENCING SHALL BE PLACED AROUND ALL PROTECTED TREES TO CREATE A PROTECTIVE ROOT ZONE AND SHALL REMAIN IN PLACE UNTIL SITE CLEARING, LAND ALTERATION, AND CONSTRUCTION ACTIVITIES ARE COMPLETE.

3. NATIVE GROUND COVER AND UNDERSTORY VEGETATION EXISTING WITHIN THE PROTECTED AREA SHALL REMAIN THROUGHOUT CONSTRUCTION. OTHER DESIGNATED VEGETATION AND INVASIVE PLANT SPECIES SHALL BE REMOVED ONLY BY MANUAL LABOR UTILIZING HAND TOOLS, OR BY OTHER METHODS APPROVED BY THE PROJECT ARBORIST.

4. TREE PROTECTION FENCING TYPES AND LOCATIONS SHALL BE ERECTED AS SHOWN ON THE TREE MITIGATION PLANS AND DETAILS, OR AS REQUESTED BY LOCAL AGENCY.

5. FINAL LOCATIONS SHALL BE COORDINATED WITH AND APPROVED BY THE PROJECT ARBORIST.

6. NO MATERIALS, EQUIPMENT, SPOIL, WASTE OR WASHOUT WATER MAY BE DEPOSITED, STORED, OR PARKED WITHIN 20 FEET OF THE TREE PROTECTION ZONE.

7. EROSION CONTROL DEVICES SUCH AS SILT FENCING, DEBRIS BASINS, AND WATER DIVERSION STRUCTURES SHALL BE INSTALLED TO PREVENT SILTATION AND/OR EROSION WITHIN THE TREE PROTECTION ZONE.

8. CONSTRUCTION ACTIVITY SHALL NOT DESTROY OR IRREVERSIBLY HARM THE ROOT SYSTEM OF PROTECTED TREES. POST HOLES AND TRENCHES LOCATED CLOSE TO PROTECTED TREES SHALL BE ADJUSTED TO AVOID DAMAGE TO MAJOR ROOTS.

9. DO NOT INSTALL CONDUIT, DRAIN OR IRRIGATION LINES, OR ANY UTILITY LINE WITHIN THE TREE PROTECTION ZONE WITHOUT THE APPROVAL OF THE PROJECT ARBORIST. IF LINES MUST TRAVERSE THE PROTECTION AREA, THEY SHALL BE TUNNELED OR BORED UNDER THE TREE.

10. CONTRACTOR'S ACCESS TO FENCED TREE PROTECTION AREAS WILL BE PERMITTED ONLY WITH APPROVAL OF THE PROJECT ARBORIST.

11. EXCAVATION OR GRADING REQUIRED WITHIN THE PROTECTED AREA SHALL BE LIMITED TO THREE (3) INCHES OF CUT OR FILL. COORDINATE WITH PROJECT ARBORIST.

12. STRUCTURES AND UNDERGROUND FEATURES TO BE REMOVED WITHIN THE TREE PROTECTION ZONE SHALL BE COORDINATED WITH THE PROJECT ARBORIST.

13. TREE PROTECTION FENCING AROUND TREES TO BE RELOCATED SHALL BE ERECTED UNTIL THE TREE IS READY TO BE RELOCATED AND NEW FENCING SHALL BE ERECTED AT THE TREES NEW LOCATION AND WILL REMAIN IN PLACE UNTIL ALL CONSTRUCTION ACTIVITIES ARE COMPLETE.

14. IF ANY DAMAGE TO TREE PROTECTION FENCING SHOULD OCCUR BY ACCIDENT OR NEGLIGENCE, THE CONTRACTOR SHALL BE RESPONSIBLE FOR IMMEDIATE REPAIRS.

15. IF TEMPORARY HAUL OR ACCESS ROADS MUST PASS OVER THE PROTECTED AREA OF TREES TO BE PRESERVED, A ROAD BED OF SIX (6) INCHES OF MULCH OR GRAVEL SHALL BE CREATED TO PROTECT THE SOIL. THE ROAD BED MATERIAL SHALL BE REPLENISHED AS NECESSARY TO MAINTAIN A SIX (6) INCH ROAD BED AT ALL TIMES. CONTRACTOR SHALL REMOVE ALL SUCH MATERIALS FROM THE SITE AS SOON AS TEMPORARY ACCESS IS NO LONGER NECESSARY.

16. CONTRACTOR SHALL COORDINATE WITH THE PROJECT ARBORIST PRIOR TO THE REMOVAL OF ALL TREE PROTECTION FENCING.

C. ROOT PRUNING/TRENCHING

1. TRENCHING LOCATIONS SHALL BE APPROVED IN THE FIELD BY THE PROJECT ARBORIST.

2. TRENCHING EQUIPMENT THAT WILL TURN AT HIGH RPM'S IS PREFERRED, AND SHALL BE APPROVED BY THE PROJECT ARBORIST. APPROVED EQUIPMENT WILL BE USED TO PERFORM ALL ROOT PRUNING OPERATIONS. A MINIMUM DEPTH OF THREE FEET IS REQUIRED.

3. INSTALL ROOT BARRIER WHERE DESIGNATED. SEE TREE MITIGATION PLAN AND DETAIL SHEETS.

4. THE TRENCH SHALL BE BACKFILLED WITH PREVIOUSLY EXCAVATED SOIL AND COMPACTED IMMEDIATELY.

5. TREES TO BE RELOCATED SHALL BE ROOT PRUNED A MINIMUM OF TWELVE (12) WEEKS PRIOR TO TREE RELOCATION.

6. WHEN THE TREE ROOT ZONE WILL BE DISTURBED, AFFECTED ROOTS MUST BE SEVERED BY CLEAN PRUNING CUTS AT THE POINT WHERE CONSTRUCTION IMPACTS THE ROOTS.

D. CLEARING

1. ANY BRUSH CLEARING REQUIRED WITHIN THE TREE PROTECTION ZONE SHALL BE ACCOMPLISHED WITH HAND-OPERATED EQUIPMENT.

2. CONTRACTOR SHALL CLEAR ALL TREE PROTECTION AREAS OF VINES, SHRUBS, GROUND COVERS, WEEDS, SAPLINGS, AND INVASIVES LISTED ON THE LATEST EDITION OF THE FLORIDA EXOTIC PEST PLANT COUNCIL'S LIST OF INVASIVE SPECIES.

3. PROJECT ARBORIST MUST APPROVE METHODS OTHER THAN HAND CLEARING.

4. A TWO (2) INCH LAYER OF MULCH SHALL BE APPLIED OVER THE SURFACE OF EXPOSED ROOTS OF PROTECTED TREES DURING THE SITE CLEARING PHASE.

E. TREE CANOPY PRUNING

TREE PRUNING SPECIFICATIONS SHALL BE DEFINED BASED ON SPECIFIC RECOMMENDATIONS OF THE PROJECT ARBORIST. INFORMATION PRESENTED BELOW SHOULD BE USED AS A GUIDELINE.

1. CONTRACTOR SHALL VISIT THE SITE WITH THE PROJECT ARBORIST TO VERIFY THE EXTENT OF REQUIRED PRUNING.

2. ALL PRUNING SHALL BE PERFORMED IN ACCORDANCE WITH THE RECOMMENDATIONS OF A QUALIFIED INTERNATIONAL SOCIETY OF ARBORICULTURE (ISA) CERTIFIED ARBORIST OR AN AMERICAN SOCIETY OF CONSULTING ARBORISTS (ASCA) REGISTERED CONSULTING ARBORIST (RCA).

3. AT LEAST ONE MEMBER OF THE PRUNING CREW SHALL BE AN ISA CERTIFIED ARBORIST.

4. WHILE IN THE TREE, THE ARBORIST SHALL PERFORM AN AERIAL INSPECTION TO IDENTIFY DEFECTS THAT REQUIRE TREATMENT. ANY ADDITIONAL WORK NEEDED SHALL BE REPORTED TO THE OWNER.

5. PRUNING CUTS SHALL BE DONE IN ACCORDANCE WITH THE LATEST EDITION OF THE ANSI A300 PRUNING STANDARD (AMERICAN NATIONAL STANDARD FOR TREE CARE OPERATIONS) AND WORK SHALL BE PERFORMED IN ACCORDANCE WITH THE LATEST EDITION OF ANSI Z133.1 SAFETY STANDARD. PRUNING SHALL BE IN ACCORDANCE WITH THE LATEST EDITION OF ISA'S "BEST MANAGEMENT PRACTICES: TREE PRUNING".

6. WHERE TEMPORARY CLEARANCE IS NEEDED FOR ACCESS, BRANCHES SHALL BE TIED BACK TO HOLD THEM OUT OF THE CLEARANCE ZONE.

7. NO MORE THAN 20 PERCENT OF LIVE FOLIAGE SHALL BE REMOVED WITHIN ANY TREE.

8. ALL TREES WITHIN THE PROJECT AREA SHALL BE PRUNED AS FOLLOWS:

    a. LIVE BRANCH PRUNING SHOULD BE PERFORMED ONLY WHEN THE DANGER OF INSECT OR DISEASE INFESTATION IS NOT PRESENT.

    b. REMOVE STUBS, CUTTING OUTSIDE THE WOUND WOOD TISSUE THAT HAS FORMED AROUND THE BRANCH.

    c. CLEANING, FOR THE SELECTIVE REMOVAL OF DEAD, DISEASED, BROKEN, OR CROSSING BRANCHES DOWN TO ONE INCH IN DIAMETER OR AS DIRECTED BY THE PROJECT ARBORIST.

    d. PRUNING CUTS LARGER THAN 4 INCHES IN DIAMETER, EXCEPT FOR DEAD WOOD, SHALL BE AVOIDED.

    e. PRUNING CUTS THAT EXPOSE HEARTWOOD SHALL BE AVOIDED WHENEVER POSSIBLE.

    f. ALL TREES WITH CROWNS THAT PROJECT INTO PARKING LOT/ROADWAY AREAS SHALL BE RAISED TO 14 FEET ABOVE FINISHED GRADE.

    g. ALL TREES WITH CROWNS THAT PROJECT INTO SIDEWALK AREAS SHALL BE RAISED TO A HEIGHT OF 8 FEET ABOVE FINISHED GRADE.

9. TREES, WHO'S ROOT SYSTEMS WILL BE IMPACTED SHALL RECEIVE THE FOLLOWING PRUNING TO COMPENSATE FOR ROOT LOSS:

    a. THE LOCATION AND SIZE OF BRANCHES FOR REDUCTION SHALL BE DEFINED BY THE PROJECT ARBORIST.

    b. REDUCTION, OR THE SELECTIVE PRUNING TO REDUCE TREE HEIGHT OR SPREAD.

    c. REDUCE END WEIGHT ON HEAVY, HORIZONTAL BRANCHES BY SELECTIVELY REMOVING SMALL DIAMETER BRANCHES, NO GREATER THAN 2 TO 3 INCHES, NEAR THE ENDS OF SCAFFOLD BRANCHES.

    d. RAISING SHALL CONSIST OF SELECTIVE PRUNING TO PROVIDE VERTICAL CLEARANCE.

10. PROPOSED/REPLACEMENT TREES

    a. PRUNING SHALL BE LIMITED TO CLEANING.

11. BRUSH SHALL BE CHIPPED AND SPREAD (ONLY WHEN DISEASE OR INSECT INFESTATION IS NOT PRESENT) UNDERNEATH TREES WITHIN THE TREE PROTECTION ZONE TO A MAXIMUM DEPTH OF THREE (3) INCHES, LEAVING THE TRUNK CLEAR OF MULCH.

12. CONTRACTOR SHALL BE RESPONSIBLE FOR REMOVING ALL EXCESS DEBRIS ON A DAILY BASIS.

F. FERTILIZATION

1. CONTRACTOR SHALL COORDINATE FERTILIZATION PLAN, FOLLOWING BEST MANAGEMENT PRACTICES WITH THE PROJECT ARBORIST PRIOR TO COMMENCEMENT OF WORK.

2. EVERY EFFORT SHALL BE MADE TO UTILIZE CHEMICALS OF AN ORGANIC OR BIODEGRADABLE NATURE IN ORDER TO OFFER THE LEAST IMPACT TO THE NATURAL ENVIRONMENT. CONTRACTOR IS RESPONSIBLE FOR MIXING, APPLYING, AND DISPOSAL OF ALL CHEMICALS IN ACCORDANCE WITH STRICT ADHERENCE TO MANUFACTURER'S SPECIFICATIONS. COORDINATE WITH PROJECT ARBORIST FOR FURTHER INSTRUCTION.

3. ONLY TREES AFFECTED BY CONSTRUCTION OR AS SHOWN ON THE TREE MITIGATION PLAN AND TREE INVENTORY SCHEDULE SHALL BE TREATED.

4. TREES SPECIFIED TO RECEIVE FERTILIZER SHALL BE TREATED AS FOLLOWS.

    a. MIX FERTILIZER ACCORDING TO MANUFACTURER'S SPECIFICATIONS INTO A TANK WITH AGITATION CAPABILITY.

    b. MIX WETTING AGENT ACCORDING TO MANUFACTURER'S SPECIFICATIONS INTO SAME TANK WITH FERTILIZER. AGITATE MIX.

    c. INJECT THE MIXTURE WITH A HYDRAULIC INJECTION SYSTEM INTO THE UPPER 6-12 INCHES OF SOIL WITH A SOIL PROBE. INJECT AT THE RATE OF ONE THIRD (1/3) GALLON AT EACH INJECTION SITE.

    d. THE CRITICAL ROOT ZONE AREA PLUS 2' BEYOND THE CRITICAL ROOT ZONE SHALL BE INJECTED, BUT NOT BEYOND ROOT PRUNING LOCATIONS.

    e. FERTILIZER SHALL BE INSTALLED PRIOR TO THE INSTALLATION OF ANY AERATION SYSTEMS.

    f. EMPTY PRODUCT CONTAINERS SHALL BE STOCKPILED FOR INSPECTION BY THE PROJECT ARBORIST PRIOR TO DISPOSAL.

5. TRANSPLANT INOCULANT & BIOSTIMULANT.

    a. CONTRACTOR SHALL PROVIDE MYCORRHIZAL TRANSPLANT INOCULANT ACCORDING TO MANUFACTURER'S SPECIFICATIONS AND AS RECOMMENDED BY THE PROJECT ARBORIST. MIX INOCULANT IN 10" WIDE TOPSOIL RING AROUND THE ROOT BALL.

    b. CONTRACTOR SHALL PROVIDE INJECTABLE MYCORRHIZAL INOCULANT ACCORDING TO MANUFACTURER'S SPECIFICATIONS AND AS RECOMMENDED BY THE PROJECT ARBORIST. AGITATE FOR 10 MINUTES.

    c. INJECT THE MIXTURE WITH A HYDRAULIC INJECTION SYSTEM INTO THE UPPER 6-12 INCHES OF SOIL WITH A SOIL PROBE. INJECT AT THE RATE OF ONE THIRD (1/3) GALLON AT EACH INJECTION SITE.

    d. EMPTY PRODUCT CONTAINERS SHALL BE STOCKPILED FOR INSPECTION BY PROJECT ARBORIST PRIOR TO DISPOSAL.

7. TRANSPLANT MAINTENANCE

    a. APPROXIMATELY ONE YEAR AFTER PLANTING, THE CONTRACTOR SHALL REFERTILIZE ALL TRANSPLANTS UTILIZING THE SAME PROCEDURES ABOVE.

G. INSECTICIDE

1. NOTIFY PROJECT ARBORIST IF ANY INFESTATION IS NOTICED.

2. FOLLOW PROJECT ARBORIST'S RECOMMENDED PROCEDURES.

3. FOLLOW ALL MANUFACTURERS' RECOMMENDATIONS CONCERNING APPLICATION. READ ALL WARNING LABELS.

4. ANY PETS, AS WELL AS, THE PETS FOOD AND WATER BOWLS SHOULD BE REMOVED FROM THE AREA AND ANY SWIMMING POOLS SHOULD BE COVERED. COORDINATE WITH PROJECT ARBORIST FOR FURTHER INSTRUCTION.

5. ENSURE COMPLETE COVERAGE AND REAPPLY 2-3 MONTHS AFTER INITIAL APPLICATION UTILIZING SAME PROCEDURE.

H. IRRIGATION

1. EVERY EFFORT SHALL BE MADE TO WATER THE PRESERVED TREES AND TRANSPLANTS. CONTRACTOR SHALL IRRIGATE BY HAND OR BY TEMPORARY IRRIGATION.

2. IRRIGATE AS REQUIRED BY PROJECT ARBORIST UNTIL PERMANENT IRRIGATION IS INSTALLED AND OPERATING.

3. UNDERGROUND IRRIGATION SHALL NOT BE INSTALLED WITHIN THE DRIP LINES OF EXISTING TREES UNLESS ROOT PROTECTION MEASURES ARE PROVIDED AND APPROVED BY PROJECT ARBORIST.

I. TREE REMOVALS

1. PRIOR TO AND DURING LAND CLEARING, INCLUDING GRUBBING, ALL TREES TO BE REMOVED SHALL BE CLEARLY MARKED BY PROJECT ARBORIST WITH RED SURVEY RIBBONS AT 36 INCHES MINIMUM ABOVE GRADE.

2. CONTRACTOR SHALL REMOVE ALL TREES AS SHOWN ON THE TREE MITIGATION PLANS AFTER THE TREE PROTECTION FENCING IS INSTALLED.

3. ALL TREES SHOWN TO BE REMOVED SHALL BE FELLED WITH A CHAIN SAW AND STUMP GROUND 6" BELOW SURFACE. ANY TREE SHOWN TO BE REMOVED THAT IS IN AN AREA WHERE COMPACTION IS CRITICAL SHALL BE FELLED WITH A CHAIN SAW AND STUMP REMOVED BY CONTRACTOR.

4. ALL WOOD AND STUMPS FROM REMOVALS SHALL BE HAULED FROM THE SITE THE SAME DAY, EXCEPT FOR TOPS. ALL TOPS ARE TO BE MULCHED AND STOCKPILED OR HAULED DIRECTLY TO MULCHED AREAS FOR RELOCATED TREES IF SCHEDULING PERMITS. TOPS SHALL BE CHIPPED AND PLACED IN THE TREE PROTECTION ZONE TO A DEPTH OF THREE (3) INCHES. ALL EXCESS WOOD CHIPS SHOULD BE HAULED OFF SITE AFTER TRANSPLANTING IS COMPLETE.

5. ALL BURN PITS IF APPLICABLE MUST BE APPROVED BY THE PROJECT ARBORIST AND OWNER.

6. TREES TO BE REMOVED THAT HAVE BRANCHES EXTENDING INTO THE CANOPY OF TREES TO REMAIN MUST BE REMOVED BY A QUALIFIED ISA CERTIFIED ARBORIST AND NOT BY DEMOLITION OR CONSTRUCTION CONTRACTORS. THE QUALIFIED ARBORIST SHALL REMOVE THE TREE IN A MANNER THAT CAUSES NO DAMAGE TO THE TREES AND UNDERSTORY VEGETATION TO REMAIN.

7. TREES TO BE REMOVED LOCATED WITHIN THE TREE PROTECTION ZONE SHALL BE REMOVED BY A QUALIFIED ISA CERTIFIED ARBORIST. THE TREES SHALL BE CUT NEAR GROUND LEVEL AND THE STUMP GROUND OUT.

J. MACHINE DUG TRANSPLANTING

1. DIG TRANSPLANT-RECEIVING HOLE.

2. SET SPADE DUG ROOT BALL INTO RECEIVING HOLE 4"-6" ABOVE EXISTING GRADE.

3. WASH SAND OR TOPSOIL INTO AIR POCKETS BETWEEN ROOT BALL AND RECEIVING HOLE.

4. INSTALL TOPSOIL RING, 4" HIGH, 10" WIDE, AROUND PERIMETER OF ROOT BALL. MIX MYCORRHIZAL TRANSPLANT INOCULANT INTO TOPSOIL RING PER MANUFACTURERS SPECIFICATIONS.

5. INSTALL THREE INCHES OF MULCH FROM PERIMETER OF ROOT BALL TO WITHIN 6" OF TREE TRUNK.

6. COVER TOPSOIL RING WITH 1" OF MULCH AND EXTEND MULCH 4"-6" DEEP, AWAY FROM PERIMETER OF ROOT BALL.

7. WATER TRANSPLANT.

K. HOLDING AREA FOR TRANSPLANTS

1. HOLDING AREAS SHOULD NOT BE NECESSARY. CONSTRUCTION PHASING SHOULD BE IMPLEMENTED SO THAT TREES ARE IMMEDIATELY RELOCATED TO THEIR PERMANENT LOCATION. COORDINATE WITH PROJECT ARBORIST AS NEEDED.

2. SHOULD A HOLDING AREA BE NECESSARY, TREE PROTECTION FENCING SHALL BE INSTALLED AT THE PERIMETER OF THE ENTIRE AREA.

3. CONTRACTOR SHALL COORDINATE LOCATION AND SPECIFICATIONS OF THE HOLDING AREA WITH PROJECT ARBORIST.

4. CONTRACTOR SHALL SUPPLY TEMPORARY IRRIGATION TO THE HOLDING AREA CONSISTING OF ABOVE GROUND PVC OR POLYETHYLENE PIPE, SPRAY OR ROTOR HEADS (WITH HEAD TO HEAD COVERAGE) AND A CONTROLLER. COORDINATE WITH PROJECT ARBORIST FOR CONTROLLER SETTINGS AND ALTERNATIVE WATERING METHODS.

L. TOPSOIL

1. CONTRACTOR SHALL COORDINATE ALL EARTHWORK OPERATIONS WITHIN TREE PROTECTION AREAS WITH THE PROJECT ARBORIST PRIOR TO BEGINNING WORK.

2. ALL TOPSOIL SHALL BE NATURAL, FRIABLE, FERTILE, FINE LOAMY SOIL POSSESSING CHARACTERISTICS OF REPRESENTATIVE TOPSOIL IN THE VICINITY THAT PRODUCES HEAVY GROWTH.

3. TOPSOIL, PH RANGE OF 5.5 TO 7.0, 3-5 PERCENT ORGANIC MATERIAL MINIMUM, FREE FROM SUBSOIL, OBJECTIONABLE WEEDS, LITTER, SODS, STIFF CLAY, STONES LARGER THAN ONE (1) INCH IN DIAMETER, STUMPS, ROOTS, TRASH, TOXIC SUBSTANCES, OR ANY OTHER MATERIAL WHICH MAY BE HARMFUL TO PLANT GROWTH.

4. VERIFY AMOUNT STOCKPILED IF ANY, AND SUPPLY ADDITIONAL AS NEEDED FROM NATURALLY WELL-DRAINED SITES WHERE TOPSOIL OCCURS AT LEAST FOUR (4) INCHES DEEP. DO NOT OBTAIN TOPSOIL FROM BOGS OR MARSHES.

5. PROJECT ARBORIST SHALL APPROVE ALL TOPSOIL PRIOR TO PLACEMENT.

M. REPAIR OF DAMAGED TREES

1. IF DAMAGE TO ANY TREE SHOULD OCCUR BY ACCIDENT OR NEGLIGENCE DURING THE CONSTRUCTION PERIOD, THE PROJECT ARBORIST SHALL APPRAISE THE DAMAGE AND MAKE RECOMMENDATIONS TO THE OWNER FOR REPAIR BY THE CONTRACTOR.

2. IF ANY TREE DESIGNATED TO BE SAVED IS REMOVED FROM THE SITE WITHOUT PERMISSION OF THE OWNER'S REPRESENTATIVE, THE PROJECT ARBORIST SHALL APPRAISE THE TREE AND MAKE RECOMMENDATIONS TO THE OWNER FOR REPLACEMENT BY THE CONTRACTOR. THE CONTRACTOR SHALL BE RESPONSIBLE FOR REPLACEMENT OF THE TREE AND ANY FEES THAT MAY BE ASSESSED TO THE OWNER BY THE GOVERNING AGENCY.

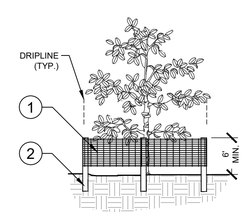

ELEVATION

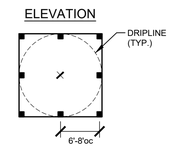

PLAN

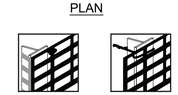

1. 6'H "PERIMETER PLUS" CONSTRUCTION FENCE BY CONWED PLASTICS OR OWNER'S REPRESENTATIVE APPROVED EQUAL. SUBMIT PRODUCT INFORMATION FOR APPROVAL PRIOR TO INSTALLATION.
2. 8' TALL METAL "T" POSTS OR 2" x 2" X 8' PRESSURE TREATED WOOD POSTS WITH 24" BURIAL BELOW GRADE.

INSTALLATION NOTES:

A. POST SELECTION SHOULD BE BASED ON EXPECTED STRENGTH NEEDS AND THE LENGTH OF TIME FENCE WILL BE IN PLACE. FLEXIBLE FIBERGLASS ROD POSTS ARE RECOMMENDED FOR PARKS, ATHLETIC EVENTS AND CROWD CONTROL INSTALLATIONS. METAL "T" POSTS OR TREATED WOOD POSTS ARE TYPICALLY USED FOR CONSTRUCTION AND OTHER APPLICATIONS.

B. POSTS SHOULD BE DRIVEN INTO THE GROUND TO A DEPTH OF 1/3 OF THE HEIGHT OF THE POST. FOR EXAMPLE, A 6' POST SHOULD BE SET AT LEAST 2' INTO THE GROUND.

C. SPACE POSTS EVERY 6' (MIN.) TO 8' (MAX.).

D. SECURE FENCING TO POST WITH NYLON CABLE TIES (AVAILABLE FROM CONWED PLASTICS). WOOD STRIPS MAY BE ALSO BE USED TO PROVIDE ADDITIONAL SUPPORT AND PROTECTION BETWEEN TIES AND POSTS.

NOTE: IF WIRE TIES ARE USED, AVOID DIRECT CONTACT WITH FENCE. WIRE MAY DAMAGE FENCE OVER TIME.

2 / TM-2 TREE PROTECTION FENCING
ELEVATION / PLAN
NTS
P-BO1-10

CALL 2 WORKING DAYS BEFORE YOU DIG
IT'S THE LAW! DIAL 811
Know what's below. Call before you dig.
SUNSHINE STATE ONE CALL OF FLORIDA, INC.

No.	Revisions	Date	By

Kimley»Horn
© 2023 KIMLEY-HORN AND ASSOCIATES, INC.
200 CENTRAL AVE, SUITE 600
ST. PETERSBURG, FL 33701
P: 727 547 3999
WWW.KIMLEY-HORN.COM REGISTRY NO. 35106

SCALE: AS NOTED
DESIGN: JLD
DRAWN: RJG
CHECKED: JLD

TREE MITIGATION NOTES

CITY OF ST. PETE BEACH
PUMP STATION 1 REHABILITATION
PINELLAS COUNY FLORIDA

DATE: DECEMBER 2023
PROJECT NO. 148404075
SHEET NUMBER TM-2

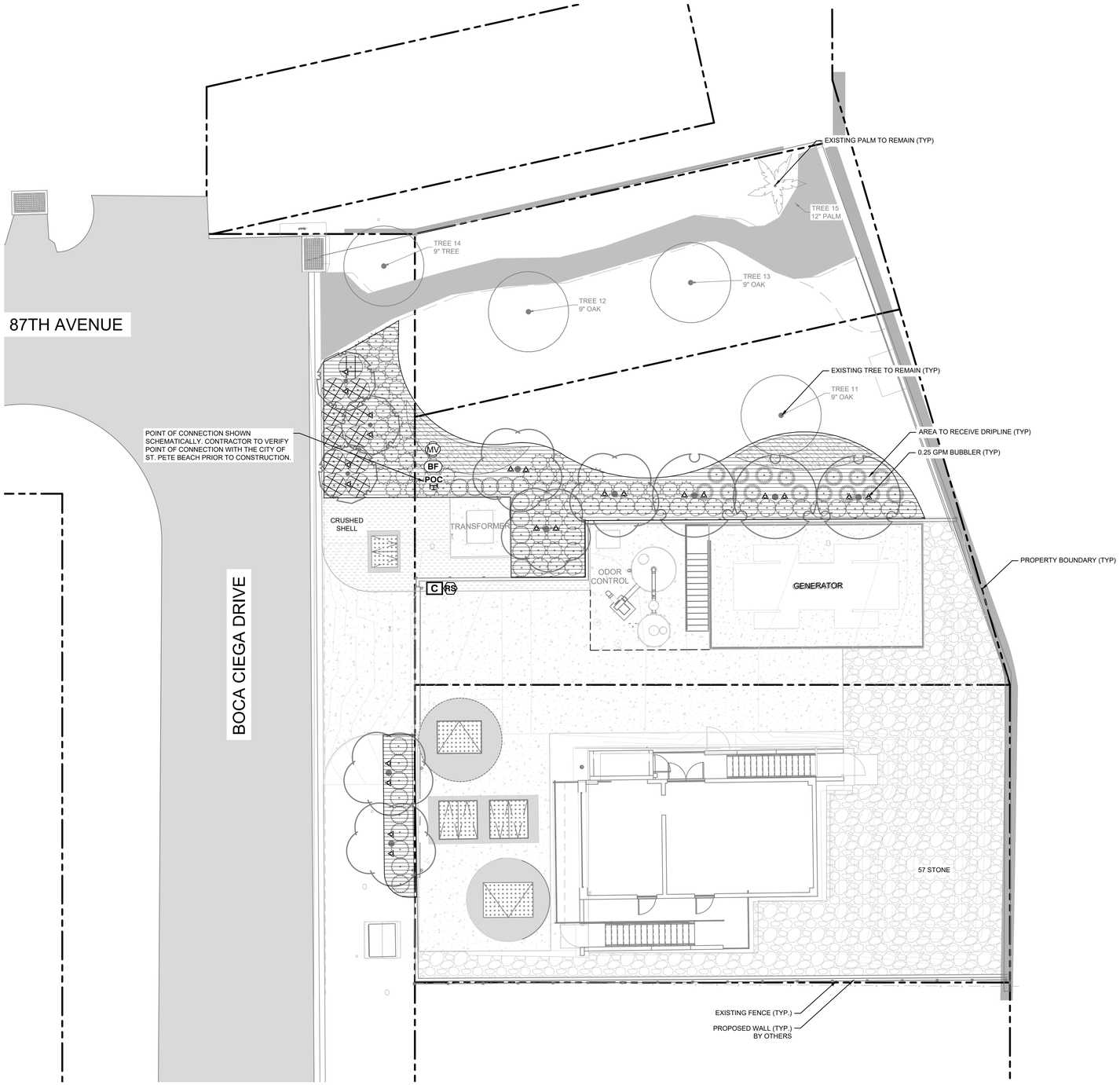

IRRIGATION SCHEDULE

SYMBOL	MANUFACTURER/MODEL/DESCRIPTION	QTY
25 50 10 20	HUNTER PCB FLOOD BUBBLER, 1/2IN. FIPT.	22

SYMBOL	MANUFACTURER/MODEL/DESCRIPTION	QTY
	AREA TO RECEIVE DRIPLINE HUNTER HDL-09-12-PC HDL-09-12-PC: HUNTER DRIPLINE WITH 0.9 GPH FLOW. LIGHT BROWN TUBING WITH BLACK STRIPING. EMITTERS AT 12" O.C. DRIPLINE LATERALS SPACED AT 12" APART, WITH EMITTERS OFFSET FOR TRIANGULAR PATTERN. INSTALL WITH HUNTER PLD BARBED OR PLD-LOC FITTINGS.	1,542 L.F.

SYMBOL	MANUFACTURER/MODEL/DESCRIPTION	QTY
MV	HUNTER IBV-FS 2" 1IN., 1-1/2IN., 2IN., AND 3IN. BRASS ELECTRIC MASTER VALVE, GLOBE CONFIGURATION, WITH NPT THREADED INLET/OUTLET, FOR COMMERCIAL/MUNICIPAL USE. WITH FILTER SENTRY FACTORY INSTALLED OPTION.	1
BF	WATTS 009 2" REDUCED PRESSURE BACKFLOW PREVENTER	1
C	HUNTER A2C-5400-PP 54-STATION CONTROLLER WITH FIVE (7) A2M-600 MODULES IN AN OUTDOOR PLASTIC PEDESTAL.	1
RS	HUNTER RAIN-CLIK RAIN SENSOR, WITH CONDUIT INSTALLATION, MOUNT AS NOTED. NORMALLY CLOSED SWITCH.	1

Valve Callout
Valve Number
Valve Flow
Valve Size

ALL IRRIGATION EQUIPMENT SHOWN SCHEMATICALLY. CONTRACTOR TO VERIFY FINAL LOCATIONS WITH CITY OF ST. PETE BEACH PRIOR TO CONSTRUCTION.

NORTH

GRAPHIC SCALE IN FEET
0 5 10 20

CALL 2 WORKING DAYS BEFORE YOU DIG
IT'S THE LAW!
DIAL 811
811 Know what's below. Call before you dig.
SUNSHINE STATE ONE CALL OF FLORIDA, INC.

No.	Revisions	Date	By

Kimley»Horn
© 2023 KIMLEY-HORN AND ASSOCIATES, INC.
200 CENTRAL AVE, SUITE 600
ST. PETERSBURG, FL 33701
P: 727 547 3999
WWW.KIMLEY-HORN.COM REGISTRY NO. 35106

SCALE: AS NOTED
DESIGN: JLD
DRAWN: RJG
CHECKED: JLD

SCHEMATIC IRRIGATION PLAN

CITY OF ST. PETE BEACH
PUMP STATION 1
REHABILITATION
PINELLAS COUNY FLORIDA

DATE: DECEMBER 2023
PROJECT NO. 148404075
SHEET NUMBER IR-1

IRRIGATION SPECIFICATIONS

1. SCOPE OF WORK

1.1. THE WORK CONSISTS OF: FURNISHING ALL LABOR, MATERIALS, EQUIPMENT, TOOLS, TRANSPORTATION, AND ANY OTHER APPURTENANCES NECESSARY FOR THE COMPLETION OF THIS PROJECT AS SHOWN ON THESE PLANS.

1.2. INSTALL THE IRRIGATION SYSTEM TO PROVIDE 100% UNIFORM COVERAGE INCLUDING ANY CHANGES MADE IN THE LAYOUT DUE TO FIELD CONDITIONS. ALL FIELD CHANGES SHALL BE IN ACCORDANCE WITH THESE PLANS. ANY SYSTEMS THAT REQUIRE FIELD ADJUSTMENT TO PROVIDE FULL AND UNIFORM COVERAGE SHALL BE MADE PRIOR TO FINAL ACCEPTANCE AT THE DIRECTION OF THE OWNER'S REPRESENTATIVE AT NO ADDITIONAL COST.

1.3. SECURE ANY AND ALL NECESSARY PERMITS FOR THE WORK PRIOR TO COMMENCEMENT OF OPERATIONS ON-SITE. SEND COPIES OF THE PERMIT(S) TO THE OWNER'S REPRESENTATIVE. FOR WORK LOCATED IN THE R.O.W., CONFORM TO THE STANDARDS AND SPECIFICATIONS OF THE AGENCY HAVING JURISDICTION.

1.4. WORK SHALL BE COORDINATED WITH OTHER TRADES TO PREVENT CONFLICTS.

2. PROTECTION OF EXISTING AND PROPOSED SITE ELEMENTS

2.1. ALL EXISTING SITE ITEMS, ALREADY COMPLETED OR ESTABLISHED AND DESIGNATED TO REMAIN SHALL BE PROTECTED FROM DAMAGE BY THE CONTRACTOR UNLESS OTHERWISE SPECIFIED. ALL DAMAGE RESULTING FROM THE CONTRACTOR'S WORK SHALL BE REPAIRED OR REPLACED TO THE SATISFACTION OF THE OWNER, AT NO COST TO THE OWNER.

2.2. MAINTAIN ALL NECESSARY BMP DEVICES THROUGHOUT THE DURATION OF ALL CONSTRUCTION ACTIVITIES.

2.3. WHERE APPLICABLE, SUBMIT A DETAILED PROJECT SPECIFIC WORK ZONE TRAFFIC CONTROL PLAN IN ACCORDANCE WITH THE APPROPRIATE REGULATORY AGENCY STANDARDS UNLESS THE WORK REQUIRES NOTHING MORE THAN A DIRECT APPLICATION OF FDOT STANDARD PLANS FOR ROAD AND BRIDGE CONSTRUCTION, INDEX 102-600.

2.4. LOCATE ALL UTILITIES, WHETHER PUBLIC OR PRIVATE, PRIOR TO CONSTRUCTION ACTIVITIES. THE INFORMATION AND DATA SHOWN WITH RESPECT TO UTILITIES IS APPROXIMATE. THE OWNER AND DESIGN PROFESSIONAL SHALL NOT BE RESPONSIBLE FOR THE ACCURACY AND COMPLETENESS OF ANY SUCH INFORMATION OR DATA. THE CONTRACTOR SHALL HAVE FULL RESPONSIBILITY FOR; REVIEWING AND CHECKING ALL SUCH INFORMATION AND DATA; LOCATING ALL UTILITIES PRIOR TO CONSTRUCTION; THE SAFETY AND PROTECTION THEREOF; AND REPAIRING ANY DAMAGE RESULTING FROM THE WORK. THE COST OF ALL WILL BE CONSIDERED AS HAVING BEEN INCLUDED IN THE CONTRACT PRICE. NOTIFY ANY AFFECTED UTILITY COMPANIES OR AGENCIES IN WRITING AT LEAST 48 HOURS PRIOR TO BEGINNING CONSTRUCTION. NOTIFY THE LANDSCAPE ARCHITECT IN WRITING WHEN ANY CONFLICT BETWEEN UTILITIES AND THESE PLANS EXIST PRIOR TO INSTALLATION.

3. SUBMITTALS

3.1. SUBMIT FULL AND COMPLETE SHOP DRAWINGS OF ALL IRRIGATION EQUIPMENT AS SHOWN ON THESE PLANS TO OWNER'S REPRESENTATIVE FOR APPROVAL PRIOR TO INSTALLATION.

3.2. SUBMIT PRODUCT DATA SHEETS FOR ALL IRRIGATION EQUIPMENT TO BE INSTALLED TO OWNER'S REPRESENTATIVE FOR APPROVAL PRIOR TO INSTALLATION. THE IRRIGATION SYSTEM, AS SHOWN ON THESE PLANS, HAS BEEN DESIGNED AND CALCULATED WITH THE EQUIPMENT AS SPECIFIED. SUBMIT ANY REQUEST FOR PRODUCT SUBSTITUTION(S) IN WRITING. IF APPROVED, THE CONTRACTOR SHALL BE RESPONSIBLE FOR ANY NECESSARY MODIFICATION(S) AS A RESULT OF PRODUCT SUBSTITUTIONS TO THE IRRIGATION SYSTEM IN THE SHOP DRAWINGS TO MEET THE DESIGN INTENT OF THESE PLANS.

4. EQUIPMENT LIST

4.1. ALL QUANTITIES ARE PROVIDED FOR CONVENIENCE ONLY. CONFIRM ALL QUANTITIES PER PLAN PRIOR TO BIDDING AND CONSTRUCTION.

5. POINT OF CONNECTION

5.1. FIELD VERIFY ALL POINT OF CONNECTION SOURCE INFORMATION INCLUDING STATIC PSI AND GPM AVAILABLE PRIOR TO CONSTRUCTION. NOTIFY OWNER'S REPRESENTATIVE IN WRITING IF DISCREPANCIES BETWEEN THE FLOW AND PRESSURE AS LISTED IN THE CRITICAL ANALYSIS AND THE FIELD CONDITIONS EXIST.

5.2. COORDINATE INSTALLATION OF ANY METERS AND BACKFLOW ASSEMBLIES WITH THE AGENCY HAVING JURISDICTION AND OWNER'S REPRESENTATIVE.

6. MAINLINE INSTALLATION

6.1. INSTALL ALL MAINLINES AND LATERALS UNDER PAVEMENT WITHIN SLEEVES. WHERE VALVE CONTROL LINES PASS THROUGH A SLEEVE WITH OTHER MAIN OR LATERAL LINES, CONTAIN WIRES WITHIN A SEPARATE, SMALLER CONDUIT.

6.2. INSTALL COLOR CODED METAL DETECTABLE MARKING TAPE WHICH CLEARLY NOTES: "CAUTION: IRRIGATION LINE BURIED BELOW" ABOVE THE FULL LENGTH OF THE IRRIGATION MAINLINE.

6.3. WHERE MAINLINE RUNS PARALLEL TO PAVEMENT OR CURBING, OFFSET THE MAINLINE 24" FROM THE EDGE OF PAVEMENT OR CURB.

6.4. PERFORM HYDROSTATIC PRESSURE TESTING AS FOLLOWS:

6.4.1. AFTER FLUSHING, AND THE INSTALLATION OF VALVES CONDUCT THE FOLLOWING TESTS IN THE SEQUENCE LISTED BELOW. FURNISH ALL EQUIPMENT; MATERIALS AND LABOR NECESSARY TO PERFORM THE TESTS. CONDUCT ALL TESTS IN THE PRESENCE OF THE OWNER'S REPRESENTATIVE. NOTIFY THE OWNER'S REPRESENTATIVE FORTY-EIGHT (48) HOURS IN ADVANCE OF TESTING.

6.4.2. PERFORM WATER PRESSURE TESTS ON ALL PRESSURE MAIN LINES BEFORE ANY COUPLINGS, FITTINGS, VALVES AND THE LIKE ARE CONCEALED.

6.4.3. IMMEDIATELY PRIOR TO TESTING, PURGE ALL IRRIGATION LINES OF ALL ENTRAPPED AIR OR DEBRIS BY ADJUSTING CONTROL VALVES AND INSTALLING TEMPORARY CAPS FORCING WATER AND DEBRIS TO BE DISCHARGED FROM A SINGLE OUTLET.

6.4.4. TEST ALL PRESSURE MAIN LINE AT 150 PSI FOR A MINIMUM OF FOUR (4) HOURS WITH AN ALLOWABLE LOSS OF 5 PSI. PRESSURE AND GAUGES SHALL BE READ IN PSI, AND CALIBRATED SUCH THAT ACCURATE DETERMINATION OF POTENTIAL PRESSURE LOSS CAN BE ASCERTAINED.

6.4.5. RE-TEST AS REQUIRED UNTIL THE SYSTEM MEETS THE REQUIREMENTS. REPAIR ANY LEAKS, WHICH OCCUR DURING TEST PERIOD, IMMEDIATELY FOLLOWING THE TEST.

6.4.6. PROVIDE DOCUMENTATION STATING THE WEATHER CONDITIONS, DATE, THE START TIME AND INITIAL WATER PRESSURE READINGS, THE FINISH TIME AND FINAL WATER PRESSURE READINGS AND THE TYPE OF EQUIPMENT USED TO PERFORM THE TEST. THE DOCUMENTATION MUST BE SIGNED BY A WITNESS ACCEPTABLE TO THE OWNER, VERIFYING ALL OF THE ABOVE-MENTIONED CONDITIONS.

6.4.7. SUBMIT A WRITTEN REPORT OF THE PRESSURE TESTING RESULTS WITH THE OTHER ABOVE REQUIRED INFORMATION TO THE OWNER'S REPRESENTATIVE FOR APPROVAL.

7. IRRIGATION VALVES AND WIRING

7.1. LOCATE ALL VALVES, SPLICES WITHIN CONTROL LINES, QUICK COUPLERS, AND HOSE BIBBS WITHIN VALVE BOXES. PROVIDE PURPLE VALVE BOX LIDS FOR SYSTEMS UTILIZING A NON-POTABLE WATER SOURCE.

7.2. NUMBER THE TOP OF ALL VALVE BOX LIDS WITH MINIMUM 1" HEIGHT BLACK LETTERS TO CORRESPOND TO THE VALVE DESIGNATIONS.

7.3. WHEN POSSIBLE, LOCATE ALL VALVES IN PLANTING BEDS A MINIMUM OF 24" FROM BACK OF CURB OR EDGE OF PAVEMENT, UNLESS OTHERWISE NOTED.

7.4. SEPARATE IRRIGATION ZONES FOR HIGH AND LOW WATER USE REQUIREMENTS AND OPERATED ON DIFFERENT WATERING CYCLES. AT NO TIME SHALL MULTIPLE IRRIGATION HEAD TYPES BE LOCATED ON THE SAME VALVE UNLESS NOTED OTHERWISE.

7.5. INSTALL ALL DRIP ZONES WITH A FLUSH VALVE AND AIR RELIEF VALVE. IN THE EVENT THAT A DRIP ZONE HAS MORE THAN ONE HIGH OR LOW POINT, MORE THAN ONE AIR RELIEF VALVE OR FLUSH VALVE WILL BE REQUIRED FOR THAT ZONE.

7.6. FOLLOW MANUFACTURER'S SPECIFICATIONS FOR ALL WIRING FOR CONNECTION OF THE VALVES TO THE CONTROLLER. ALL WIRE RUNS SHALL BE CONTINUOUS WITH SPLICING OCCURRING IN VALVE BOXES ONLY. WIRE CONNECTIONS SHALL BE MADE USING DBR/Y-6 CONNECTIONS OR APPROVED EQUAL.

7.7. INSTALL VALVE CONTROL WIRING IN THE SAME TRENCH AS THE MAINLINE WHERE PRACTICAL.

7.8. FOR NON TWO-WIRE SYSTEMS, RUN TWO (2) SPARE VALVE CONTROL WIRES FROM THE CONTROLLER ALONG THE ENTIRE MAINLINE TO LAST REMOTE CONTROLLED VALVE ON EACH AND EVERY LEG OF MAINLINE.

8. PIPES AND SLEEVING

8.1. DO NOT INSTALL IRRIGATION SYSTEM THROUGH PRESERVED PLANT COMMUNITIES, DRIPLINE OF EXISTING TREES, OR WITHIN WETLANDS UNLESS SPECIFICALLY NOTED OTHERWISE.

8.2. LOCATE ALL IRRIGATION LINES WITHIN LANDSCAPED AREAS WHENEVER POSSIBLE. ALL LINES UNDER PAVEMENT MUST BE SLEEVED.

8.3. SIZE ALL PIPE SLEEVES TWO PIPE SIZES GREATER THAN THE PIPE / CUMULATIVE SUM OF THE PIPES IT CARRIES.

8.4. SLEEVES UNDER EXISTING PAVEMENT MUST BE DIRECTIONAL BORE UNLESS APPROVED BY OWNER IN WRITING.

8.5. SOLVENT CEMENTS SHALL COMPLY WITH ASTM D2564.

9. CONTROLLER AND SENSORS

9.1. COORDINATE WITH OWNER'S REPRESENTATIVE FOR FINAL CONTROLLER AND RAIN SENSOR LOCATIONS. THE CONTROLLER SHALL BE PLACED IN A LOCKING CABINET APPROPRIATE FOR ITS LOCATION. (INDOOR VS. OUTDOOR USE)

9.2. LOCATE THE AUTOMATIC RAIN SENSOR SHUTOFF DEVICE IN AN AREA THAT IS UNOBSTRUCTED BY TREES, ROOF OVERHANGS, OR ANY OTHER OVERHEAD OBJECT. THE SENSOR SHALL NOT BE PLACED WITHIN THE SPRAY ZONE OF ANY SPRINKLER HEAD, INCLUDING OFF-SITE IRRIGATION. CONTRACTOR SHALL LOCATE SENSOR WITHIN CLOSE PROXIMITY TO THE IRRIGATION CONTROLLER.

10. CLEANUP

10.1. UPON COMPLETION OF ALL WORK AND BEFORE FINAL ACCEPTANCE, REMOVE ALL MATERIAL, EQUIPMENT, AND DEBRIS RESULTING FROM HIS WORK. ALL PAVED AREAS SHALL BE CLEANED AND THE SITE LEFT IN A NEAT AND ACCEPTABLE CONDITION AS APPROVED BY THE OWNER'S REPRESENTATIVE.

11. AS-BUILT IRRIGATION PLANS

11.1. PROVIDE "AS-BUILT" DRAWINGS OF THE FINAL INSTALLATION TO OWNER'S REPRESENTATIVE PRIOR TO FINAL ACCEPTANCE OF WORK. INCLUDE THE FOLLOWING ON THE AS-BUILT DRAWINGS AT A MINIMUM:
- CONTROLLER LOCATION
- CONNECTION ASSEMBLY
- MAINLINE ROUTING
- PIPE SLEEVING
- VALVE(S)
- COLORIZED ZONING DIAGRAM

11.2. LOCATE ALL SLEEVES UTILIZED BY THE IRRIGATION CONTRACTOR WHETHER INSTALLED BY THE IRRIGATION CONTRACTOR OR NOT ON THE "AS-BUILT" DRAWINGS. THE DEPTH BELOW FINISH GRADE, TO THE NEAREST FOOT OF EACH END OF THE SLEEVE SHALL BE NOTED AT EACH SLEEVE LOCATION ON THE "AS-BUILT" DRAWINGS.

12. FINAL INSPECTION AND ACCEPTANCE OF WORK

12.1. MINIMIZE IRRIGATION OVERTHROW TO IMPERVIOUS AND NATURAL AREAS THROUGH FIELD ADJUSTMENTS TO INDIVIDUAL HEADS.

12.2. PROGRAM CONTROLLER TO IRRIGATE ALL ZONES WITHIN APPLICABLE WATERING WINDOWS AND PROVIDE WATERING SCHEDULE TO OWNER'S REPRESENTATIVE.

12.3. EQUIPMENT TO BE FURNISHED TO OWNER PRIOR TO ACCEPTANCE OF WORK:

- TWO (2) SETS OF KEYS FOR EACH AUTOMATIC CONTROLLER.
- TWO (2) 48 INCH TEE WRENCHES FOR OPERATING GATE VALVES (WHEN INSTALLED AS PART OF WORK).
- THREE (3) SETS OF SPECIAL TOOLS REQUIRED FOR REMOVING, DISASSEMBLING AND ADJUSTING EACH TYPE OF - SPRINKLER AND VALVE SUPPLIED ON THIS PROJECT.
- FIVE (5) EXTRA SPRINKLER HEADS, NOZZLES, SHRUB ADAPTERS, NOZZLE FILTER SCREENS, FOR EACH TYPE USED ON THE PROJECT.
- TWO (2) QUICK COUPLER KEYS TO MATCH MANUFACTURER TYPE OF QUICK COUPLER.

12.4. UPON COMPLETION OF ALL WORK, A FINAL INSPECTION SHALL BE PERFORMED BY THE OWNER AND/OR OWNER'S REPRESENTATIVE. THE IRRIGATION SYSTEM, CONSTRUCTION AND ALL OTHER INCIDENTAL WORK PERTAINING TO THIS CONTRACT SHALL BE INSPECTED FOR COMPLIANCE WITH THE CONTRACT DOCUMENTS. ANY ITEMS FOUND TO NOT BE IN COMPLIANCE SHALL BE CORRECTED AT NO COST TO THE OWNER.

13. WARRANTY

13.1. THE CONTRACTOR SHALL WARRANTEE ALL WORKMANSHIP AND MATERIALS FOR A PERIOD OF 1 YEAR FOLLOWING THE ACCEPTANCE OF THE WORK.

13.2. ANY PART OF THE IRRIGATION WORK THAT FAILS OR IS DEFECTIVE SHALL BE REPLACED OR RECONSTRUCTED AT NO COST TO THE OWNER INCLUDING BUT NOT LIMITED TO: RESTORING GRADES THAT HAVE SETTLED IN TRENCHES AND EXCAVATIONS RELATED TO THE WORK. RECONSTRUCTION SHALL INCLUDE ANY PLANTINGS, SOIL, MULCH OR OTHER PARTS OF THE CONSTRUCTED LANDSCAPE THAT MAY BE DAMAGED DURING THE REPAIR OR THAT RESULTS FROM SOIL SETTLEMENT.

13.3. THE DATE OF ACCEPTANCE OF THE WORK AND START OF THE GUARANTEE PERIOD SHALL BE DETERMINED BY THE OWNER, UPON THE FINDING THAT THE ENTIRE IRRIGATION SYSTEM IS INSTALLED AS DESIGNED AND SPECIFIED, AND FOUND TO BE OPERATING CORRECTLY, SUPPLYING WATER EVENLY TO ALL PLANTING AND/OR LAWN AREAS.

13.4. NEITHER THE FINAL ACCEPTANCE NOR ANY PROVISION IN THE CONTRACT DOCUMENTS SHALL RELIEVE THE CONTRACTOR OF RESPONSIBILITY FOR FAULTY MATERIALS OR WORKMANSHIP. REMEDY ANY DEFECTS WITHIN A PERIOD OF 7 DAYS (S) FROM THE DATE OF NOTIFICATION OF A DEFECT.

14. ABBREVIATIONS

GPM - GALLONS PER MINUTE
GPH - GALLONS PER HOUR
PSI - POUNDS PER SQUARE INCH

LATERAL PIPE SIZING REQUIREMENTS

MAXIMUM FLOW	MINIMUM PIPE SIZE
10 GPM	3/4"
16 GPM	1"
26 GPM	1-1/4"
35 GPM	1-1/2"
55 GPM	2"
80 GPM	2-1/2"
120 GPM	3"

PIPE SIZES ILLUSTRATED IN THE ABOVE CHART ARE MINIMUM ACCEPTABLE SIZES. PIPE SIZES INDICATED ON PLAN ARE FOR CONVENIENCE ONLY. FIELD SIZE ALL LATERAL PIPING TO KEEP ALL FRICTION LOSS VELOCITIES BELOW 5.0 FPS.

CALL 2 WORKING DAYS BEFORE YOU DIG
IT'S THE LAW! DIAL 811
811 Know what's below. Call before you dig.
SUNSHINE STATE ONE CALL OF FLORIDA, INC.

No.	Revisions	Date	By

Kimley»Horn

© 2023 KIMLEY-HORN AND ASSOCIATES, INC.
200 CENTRAL AVE, SUITE 600
ST. PETERSBURG, FL 33701
P: 727 547 3999
WWW.KIMLEY-HORN.COM REGISTRY NO. 35106

SCALE: AS NOTED
DESIGN: JLD
DRAWN: RJG
CHECKED: JLD

SCHEMATIC IRRIGATION NOTES

CITY OF ST. PETE BEACH
PUMP STATION 1 REHABILITATION
PINELLAS COUNY FLORIDA

DATE: DECEMBER 2023
PROJECT NO. 148404075
SHEET NUMBER IR-2

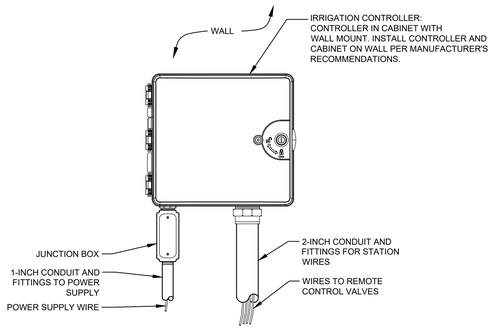

NOTES:
1. FOR EASE OF INSTALLATION INTO A CONTROLLER WITH MORE THAN 24 STATIONS, INSTALL A JUNCTION BOX AT THE BASE OF CONTROLLER AND TRANSITION LARGER VALVE AND COMMON WIRES FROM FIELD TO 18 AWG MULTI CONDUCTOR WIRE TO BE USED IN CONTROLLER.
2. USE STEEL CONDUIT FOR ABOVE GRADE AND SCH 40 PVC CONDUIT FOR BELOW GRADE CONDITIONS.
3. PROVIDE PROPER GROUNDING COMPONENTS TO ACHIEVE GROUND RESISTANCE OF 10 OHMS OR LESS.

1 IR-3 IRRIGATION CONTROLLER - WALL MOUNT
ELEVATION NTS

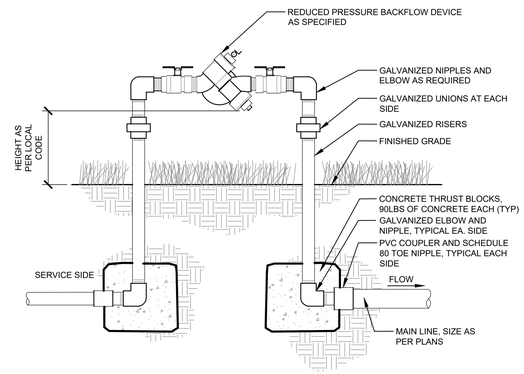

2 IR-3 BACKFLOW PREVENTER
SECTION NTS

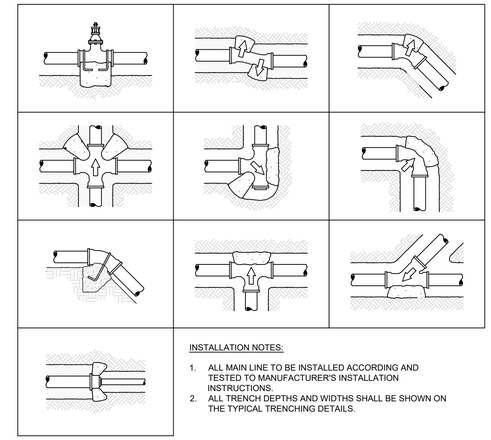

INSTALLATION NOTES:
1. ALL MAIN LINE TO BE INSTALLED ACCORDING AND TESTED TO MANUFACTURER'S INSTALLATION INSTRUCTIONS.
2. ALL TRENCH DEPTHS AND WIDTHS SHALL BE SHOWN ON THE TYPICAL TRENCHING DETAILS.

3 IR-3 TYPICAL THRUST BLOCK
SECTION NTS

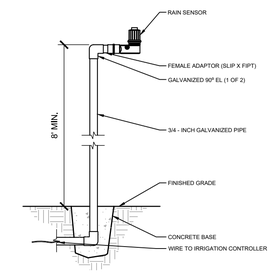

4 IR-3 RAIN SENSOR - POLE MOUNT
SECTION NTS

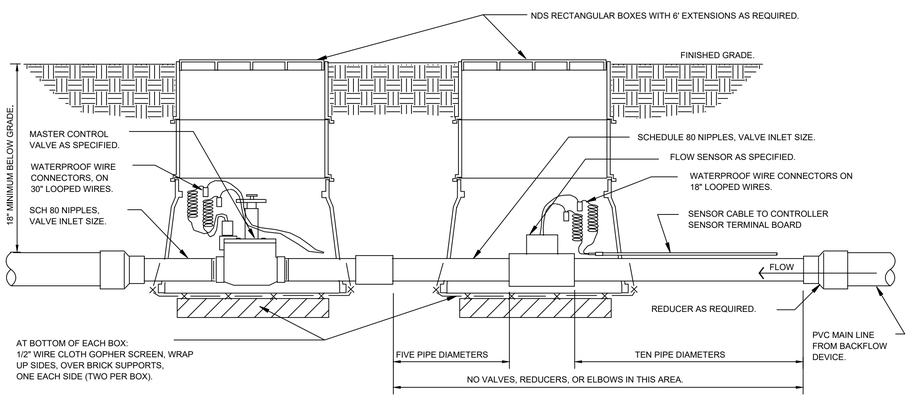

5 IR-3 MASTER CONTROL VALVE / FLOW SENSOR ASSEMBLY
SECTION NTS

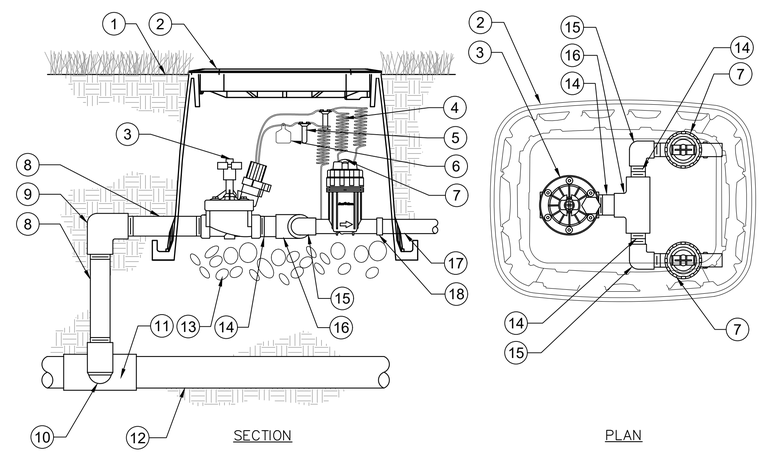

1. FINISH GRADE/TOP OF MULCH
2. VALVE BOX WITH LOCKING COVER
3. REMOTE CONTROL VALVE
4. 30-INCH LINEAR LENGTH OF WIRE, COILED
5. WATERPROOF CONNECTION
6. ID TAG
7. PRESSURE REGULATING QUICK CHECK BASKET FILTER
8. PVC SCH 80 NIPPLE (LENGTH AS REQUIRED)
9. PVC SCH 40 ELL
10. PVC SCH 80 NIPPLE (2-INCH LENGTH, HIDDEN) AND PVC SCH 40 ELL
11. PVC SCH 40 TEE OR ELL
12. MAINLINE PIPE
13. 6-INCH MINIMUM DEPTH OF 3/4-INCH WASHED GRAVEL
14. PVC SCH 80 NIPPLE, CLOSE
15. PVC SCH 40 ELL
16. PVC SCH 40 TEE
17. LATERAL PIPE
18. PVC SCH 40 FEMALE ADAPTOR

6 IR-3 DRIP ZONE VALVE KIT
SECTION / PLAN NTS

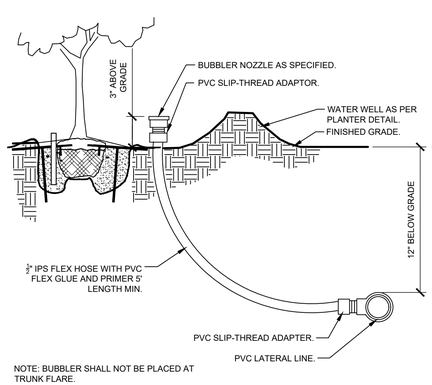

NOTE: BUBBLER SHALL NOT BE PLACED AT TRUNK FLARE.

7 IR-3 TYPICAL BUBBLER
SECTION NTS

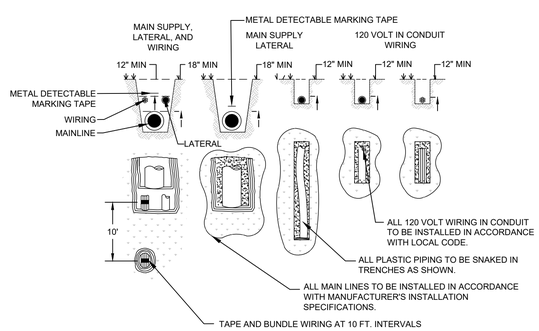

8 IR-3 TYPICAL TRENCHING
SECTION NTS

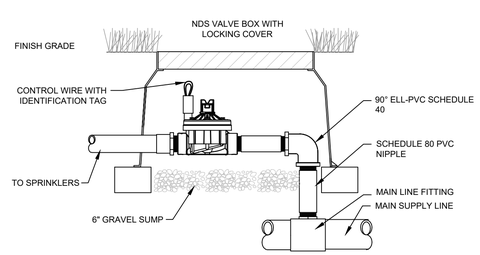

LINE BOTTOM OF VALVE PIT WITH LANDSCAPE FABRIC. MAINTAIN CLEAR SPACE BETWEEN BOTTOM OF VALVE PIT AND VALVE. DO NOT ALLOW BOX TO REST ON PIPE.

9 IR-3 TYPICAL CONTROL VALVE
SECTION NTS

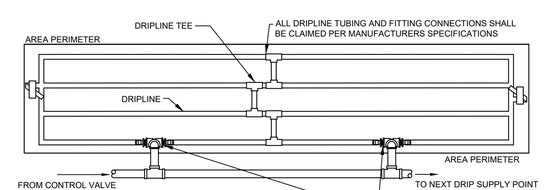

NOTE:
1. DRIP TUBING TO BE ROUTED IN THE PLANT MATERIAL BED WITH AT MAXIMUM LATERAL SPACING OF 16 INCHES.
2. DRIP TUBING TO BE INSTALLED IN A GRID PATTERN. DRIP TUBING SHALL NOT BE INSTALLED IN A LONG CONTINUOUS RUN.
3. CONTRACTOR TO REFER TO IRRIGATION PLAN FOR LOCATION OF CONTROL VALVES THAT UTILIZE MULTIPLE DRIPLINE SUPPLY CONNECTIONS.

10 IR-3 TYPICAL DRIPLINE
PLAN NTS

No.	Revisions	Date	By

Kimley»Horn
© 2023 KIMLEY-HORN AND ASSOCIATES, INC.
200 CENTRAL AVE., SUITE 600
ST. PETERSBURG, FL 33701
P: 727 547 3999
WWW.KIMLEY-HORN.COM REGISTRY NO. 35106

SCALE: AS NOTED
DESIGN: JLD
DRAWN: RJG
CHECKED: JLD

SCHEMATIC IRRIGATION DETAILS

CITY OF ST. PETE BEACH
PUMP STATION 1 REHABILITATION
PINELLAS COUNY FLORIDA

DATE: DECEMBER 2023
PROJECT NO. 148404075
SHEET NUMBER IR-3

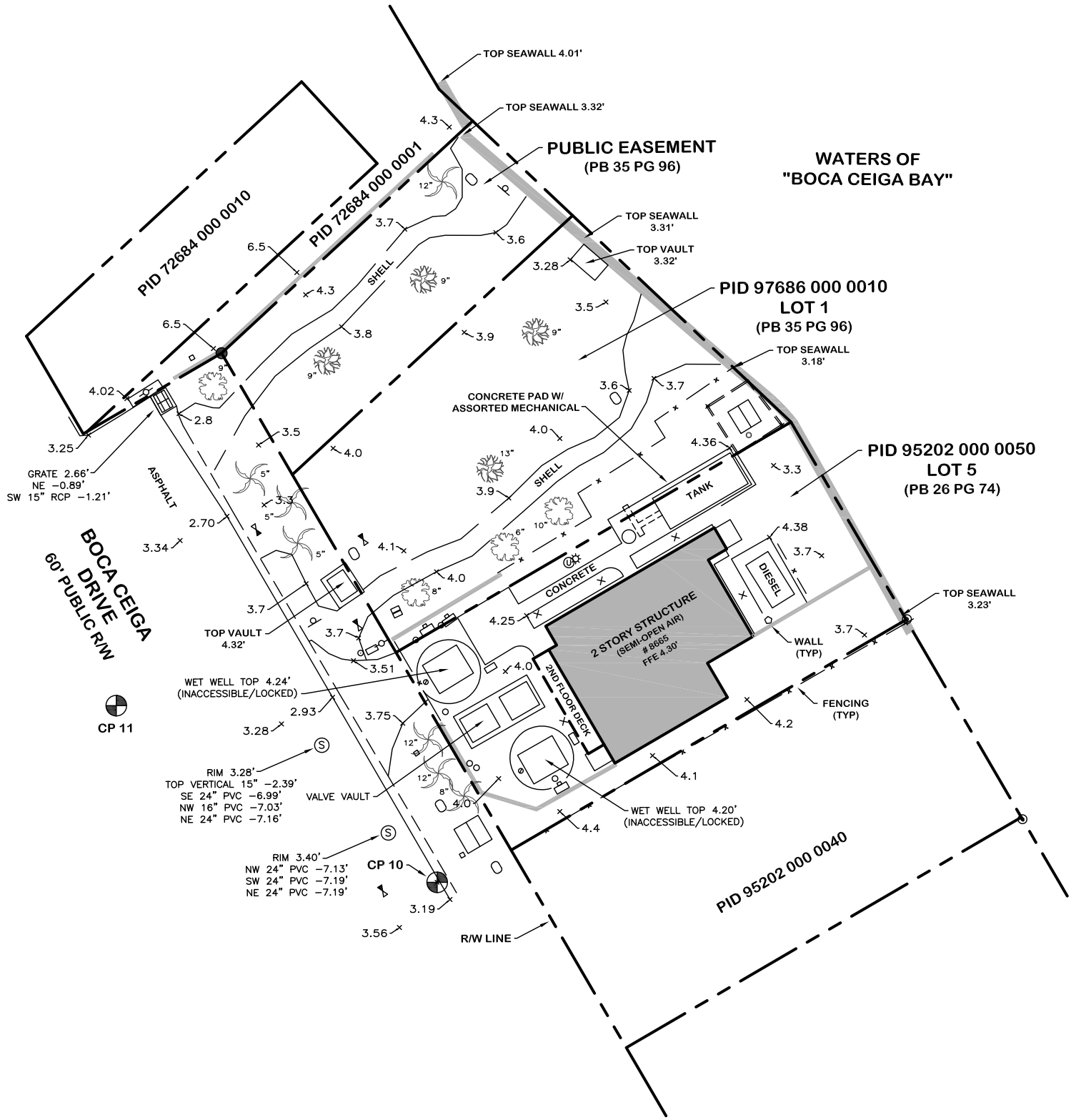

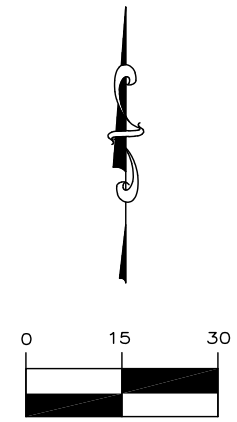

SITE CONTROL

DESIGNATION	NORTHING	EASTING	ELEVATION
CP 10 ND LB 7203	1243087.59	412194.71	3.168'
CP 11 IR LB 7203	1243126.21	412124.56	3.305'

LEGEND

	CONTROL POINT		WATER METER
R/W	RIGHT-OF-WAY		BOLLARD
PID	PARCEL IDENTIFICATION		CLEANOUT
FFE	FINISHED FLOOR ELEVATION		UTILITY ACCESS
PB	PLAT BOOK		UTILITY RISER
PG	PAGE		ELECTRIC METER
	IRON ROD FOUND		LIGHT POLE
	NAIL W/ DISC FOUND		ANTENNA
	GRATE INLET		VERTICAL PIPING
	SIGN		GROUNDING ROD
	SEWER VALVE		UTILITY MANHOLE
	RECLAIM VALVE		OAK
	SANITARY MANHOLE		PALM
	CONTROL PANEL		TREE
	BACKFLOW PREVENTER		
	TRANSFORMER		

GENERAL NOTES

1. THIS SURVEY IS REFERENCED TO A GRID PROJECTION OF THE STATE PLANE COORDINATE SYSTEM OF FLORIDA WEST ZONE (NAD 1983/2011 ADJUSTMENT).
2. THE FOLLOWING NGS VERTICAL CONTROL POINT WAS RECOVERED AND UTILIZED FOR THE ELEVATIONS SHOWN HEREON: "BLIND" NAVD 1988 ELEVATION 3.26'.
3. THIS SURVEY IS SUBJECT TO ADDITIONAL PERTINENT EASEMENTS, RIGHTS-OF-WAY AND RESTRICTIONS OF RECORD, IF ANY.
4. THIS SURVEY DRAWING WAS PREPARED FOR THE EXCLUSIVE USE OF THE PARTY OR PARTIES CERTIFIED TO FOR THE EXPRESS PURPOSE STATED HEREIN AND/OR CONTAINED IN THE CONTRACT BETWEEN HYATT SURVEY SERVICES, INC. AND THE CLIENT FOR THIS PROJECT. COPYING, DISTRIBUTING AND/OR USING THIS DRAWING IN WHOLE OR IN PART FOR ANY PURPOSE OTHER THAN ORIGINALLY INTENDED WITHOUT WRITTEN CONSENT FROM HYATT SURVEY SERVICES, INC. IS STRICTLY PROHIBITED AND RENDERS THE SURVEYOR'S CERTIFICATION, SIGNATURE AND SEAL NULL AND VOID. ANY QUESTIONS CONCERNING THE CONTENT OR PURPOSE OF THIS DRAWING SHOULD BE DIRECTED TO HYATT SURVEY SERVICES, INC.

PROJECT #	21-2683
SURVEY #	PS 1
SEC/TWN/RGE	25-31S-15E
SCALE	1" = 30'
SURVEYED	12/2021
SHEET 1 OF 1	

HYATT SURVEY SERVICES, INC.
LB No.: 7203 Geographic Data Specialists
2012 Lena Road Bradenton, Florida 34211
Phone: (941) 748-4693

TOPOGRAPHIC SURVEY
PUMP STATION 1 REHABILITATION
ST. PETE BEACH
BOCA CEIGA DRIVE & 87TH AVENUE
PINELLAS COUNTY, FLORIDA

THIS SURVEY IS NOT VALID WITHOUT THE ORIGINAL SIGNATURE AND RAISED SEAL OR DIGITAL SIGNATURE OF A FLORIDA LICENSED SURVEYOR AND MAPPER.

Russell P Hyatt

Digitally signed by Russell P Hyatt
Date: 2025.12.03 13:41:33 -05'00'

RUSSELL P. HYATT, PSM
FLORIDA SURVEYORS REGISTRATION NO. 5303

CITY COMMISSION MEETING
CITY OF ST. PETE BEACH
COMMISSION CHAMBERS

Agenda Report

Agenda Title Name: Resolution 2025-29: Live Local Act Property Tax Exemption

Action Request: Motion to approve Resolution 2025-29.

Strategic Objective: Operational Excellence

Date: December 16, 2025

Prepared By: Ralf Brookes, City Attorney

Through: Frances Robustelli, City Manager

Summary of Issue: The State of Florida's Live Local Act created a new property tax exemption for apartment complexes that offer certain income-restricted rental units. Cities are allowed to "opt-out" of providing this exemption, but only if a required annual housing report from the University of Florida (the Shimberg Report) shows that the area already has enough affordable units. This year, because of the Federal Government Shutdown, the 2025 Shimberg Report is delayed and will not be released until later in December—after the statutory deadline for cities to act. To avoid losing the ability to opt-out if the upcoming report shows our City is eligible, the City is adopting this Resolution conditionally. It will only take effect if the delayed Shimberg Report, once released, confirms that the City qualifies under state law.

Funding: Adoption of the opt-out Resolution will result in the city potentially receiving a slightly higher share of ad valorem tax monies than without the opt-out Resolution.

Attachments:

1. Resolution 2025-29 Live Local Act Property Tax Exemption

RESOLUTION NO. 2025-29

A RESOLUTION OF THE CITY OF ST. PETE BEACH, PINELLAS COUNTY, FLORIDA, PURSUANT TO SECTION 196.1978(3)(o), FLA. STAT., ELECTING TO NOT EXEMPT PROPERTY FROM AD VALOREM PROPERTY TAX UNDER SECTION 196.1978(3)(d)1.a., FLA. STAT., COMMONLY KNOWN AS THE "LIVE LOCAL ACT PROPERTY TAX EXEMPTION"; PROVIDING FOR INCORPORATION OF RECITALS, REQUIRED FINDINGS, DIRECTION TO THE MAYOR, DIRECTION TO THE CITY MANAGER, APPLICABILITY, SEVERABILITY, AND A CONDITIONAL EFFECTIVE DATE.

WHEREAS, Section 196.1978(3), Florida Statutes (the "Live Local Act Property Tax Exemption") requires the Pinellas County Property Appraiser to exempt certain rental properties from ad valorem taxes if such properties meet the statutory criteria; and

WHEREAS, beginning with the 2025 tax roll, §196.1978(3)(o), Fla. Stat., allows taxing authorities to "opt-out" of providing the Live Local Act Property Tax Exemption for units in multifamily projects used to house natural persons or families whose annual household income is between 80% and 120% of the median annual adjusted gross income for households within the metropolitan statistical area ("MSA"), or, if not within an MSA, within the county in which the person or family resides (the "80 to 120 Tax Exemption"), if the taxing authority finds that the latest Shimberg Center for Housing Studies Annual Report, prepared pursuant to §420.6075, Fla. Stat. ("Shimberg Annual Report"), identifies that the number of affordable and available units in the MSA or region is greater than the number of rental households in the MSA or region for natural persons or families who meet the income criteria; and

WHEREAS, the City of St. Pete Beach relies upon the annual Shimberg Annual Report to determine whether it is eligible to exercise the opt-out authority set forth in §196.1978(3)(o), Fla. Stat.; and

WHEREAS, due to the Federal Government Shutdown occurring in late 2025, the compilation, review, and release of the 2025 Shimberg Annual Report has been delayed and is not expected to be available until later in December 2025; and

WHEREAS, because the Report is not yet available, St. Pete Beach cannot presently determine whether it is eligible to opt-out of the Live Local Act Property Tax Exemption; and

WHEREAS, in order to ensure compliance with statutory deadlines and to preserve St. Pete Beach's ability to opt-out in the event the forthcoming Shimberg Annual Report shows that St. Pete Beach is eligible, the City Commission desires to adopt this Resolution conditionally, to become effective only if the Report supports the statutory findings required by §196.1978(3)(o), Fla. Stat.

NOW, THEREFORE, BE IT RESOLVED BY THE CITY OF ST. PETE BEACH, FLORIDA:

SECTION ONE. INCORPORATION OF RECITALS. The "WHEREAS" clauses set forth above are incorporated herein by reference and represent the legislative findings of the City Commission supporting the need for this Resolution.

SECTION TWO. OPT-OUT ELECTION; REQUIRED FINDINGS. The City Commission hereby states its intent to elect not to exempt properties eligible for the 80 to 120 Tax Exemption pursuant to §196.1978(3)(o), Fla. Stat., but only if and upon the condition that the 2025 Shimberg Annual Report, upon its release, demonstrates that the City of St. Pete Beach is eligible under Florida law to make such an election. If eligibility is confirmed by the findings of the Report, St. Pete Beach hereby requests that the Pinellas County Property Appraiser not grant any such exemptions for the 2025 tax roll.

SECTION THREE. DIRECTION TO THE MAYOR. The Mayor, or in the Mayor's absence the Vice Mayor, is authorized to execute this Resolution only upon the publication or release of the 2025 Shimberg Annual Report confirming St. Pete Beach' eligibility to opt-out pursuant to Section Two of this Resolution.

SECTION FOUR. DIRECTION TO CITY MANAGER. Upon confirmation of eligibility, the City Manager is directed to provide an executed copy of this Resolution to the Pinellas County Property Appraiser prior to the statutory deadline.

SECTION FIVE. APPLICABILITY. This Resolution applies solely to ad valorem property tax levies imposed by the City of St. Pete Beach.

SECTION SIX. SEVERABILITY. If any provision of this Resolution is held invalid by a court of competent jurisdiction, or if any portion becomes preempted by state law, the affected provision shall be deemed stricken and the remainder shall continue in full force and effect.

SECTION SEVEN. CONDITIONAL EFFECTIVE DATE. This Resolution shall only take effect if, and upon the date that, the 2025 Shimberg Annual Report establishes that St. Pete Beach is eligible under §196.1978(3)(o), Fla. Stat., to elect not to provide the Live Local Act Property Tax Exemption. If the Report does not establish eligibility, this Resolution shall be null and void without further action of the City Commission.

PASSED AND APPROVED BY THE CITY COMMISSION OF THE CITY OF ST. PETE BEACH, FLORIDA, THIS _____ DAY OF _____, 2025.

CITY COMMISSION, CITY OF ST. PETE BEACH, FLORIDA.

_____
Adrian Petrila, Mayor

ATTEST:

_____
Renee Rose, City Clerk

APPROVED AS TO FORM AND LEGAL SUFFICIENCY:

_____
Ralf Brookes, City Attorney

CITY COMMISSION MEETING
CITY OF ST. PETE BEACH
COMMISSION CHAMBERS

Agenda Report

Agenda Title Name: Approval of Settlement Agreement and Amended Development Order – Red, White & Booze, LLC

Action Request: Motion to approve the Settlement Agreement and Release with Red, White & Booze, LLC, Charles L. Collom, and Helen Collom, and approve the associated Amended Development Order for Conditional Use Permit No. 23034

Strategic Objective: Operational Excellence

Date: December 16, 2025

Prepared By: Ralf Brookes, City Attorney

Through: Frances Robustelli, City Manager

Summary of Issue:

The City of St. Pete Beach is a party to litigation involving Red, White & Booze, LLC and related parties. The proposed Settlement Agreement is contingent upon City Commission approval and includes provisions for amendments to the applicable Development Order. In conjunction with the settlement, staff has prepared an Amended Development Order for Conditional Use Permit No. 23034.

Funding: N/A

Attachments: