CITY COMMISSION MEETING
CITY OF ST. PETE BEACH
COMMISSION CHAMBERS

155 Corey Avenue
St. Pete Beach, FL 33706

Tuesday, June 23, 2026
6:00 PM

Call to Order
Pledge of Allegiance
Roll Call

REGULAR MEETING

1. Approval of the Agenda -

Action Request: Motion to approve the June 23, 2026 agenda.

2. Audience Comments -

If you wish to speak, please complete and submit a speaker's card to the City Clerk. When called, approach the podium and state your name and address for the record. Comments are limited to 3 minutes for both general and agenda items. Public comment on agenda items will be taken when that item is called. Any presentation intended as part of public comment must be provided to the City Clerk at least 24 hours before the meeting.

3. Consent -

a. Approval of the June 9, 2026 City Commission Work Session Minutes and Regular Meeting Minutes

b. Authorize the ratification of the tentative collective bargaining agreement (CBA) Article 24: Pay Plan (Wage Reopener) reached between City Administration and the International Association of Firefighters (IAFF) Local 4966 for the period October 1, 2026 – September 30, 2028.

c. Adopt Resolution 2026-20: Modifying and reapproving rules of procedure for the Historic Preservation Board, primarily to reduce the number of members required for conduct and approval of most business from four to three.

d. Authorize the City Manager to execute a Services Agreement with Free Agent Marine LLC for Commercial Diving Services in the amount not to exceed $50,000 annually.

e. Authorize the City Manager to execute a Services Agreement with See Dive LLC for Commercial Diving Services in the amount not to exceed $50,000

annually.

f. Authorize the City Manager to execute a Services Agreement with Dive-Tech International, Inc. for Commercial Diving Services in the amount not to exceed $50,000 annually.

g. Authorize the City Manager to execute the Agreement with RCM Utilities, LLC for Wastewater System Rehabilitation Services on an as-needed basis in an amount not to exceed annually appropriated funding.

h. Authorize the City Manager to execute the Agreement with Rowland (DE), LLC for Wastewater System Rehabilitation Services on an as-needed basis in an amount not to exceed annually appropriated funding.

i. Authorize the City Manager to execute the Agreement with SAK Construction, LLC for Wastewater System Rehabilitation Services on an as-needed basis in an amount not to exceed annually appropriated funding.

j. Authorize the City Manager to execute the Agreement with Flotech Environmental, LLC for Wastewater System Rehabilitation Services on an as-needed basis in an amount not to exceed annually appropriated funding.

k. Authorize the City Manager to execute the Agreement with Hinterland Group, LLC for Wastewater System Rehabilitation Services on an as-needed basis in an amount not to exceed annually appropriated funding.

l. Authorize the City Manager to execute the Agreement with PCS Civil, LLC for Civil On-Call Construction Services on an as-needed basis in an amount not to exceed annually appropriated funding.

m. Authorize the City Manager to execute the Agreement with Southern Road and Bridge, LLC for Civil On-Call Construction Services on an as-needed basis in an amount not to exceed annually appropriated funding.

n. Authorize the City Manager to execute the Agreement with Ajax Paving Industries of Florida, LLC for Civil On-Call Construction Services on an as-needed basis in an amount not to exceed annually appropriated funding.

o. Authorize the City Manager to execute the Agreement with BCS Construction Group for Civil On-Call Construction Services on an as-needed basis in an amount not to exceed annually appropriated funding.

p. Authorize the City Manager to execute the Agreement with Cathcart Construction Company Florida, LLC for Civil On-Call Construction Services on an as-needed basis in an amount not to exceed annually appropriated funding.

q. Authorize the City Manager to execute the Contract with Marolf Environmental for the Pump & Lift Station Rehabilitations capital improvement project in the amount not to exceed $2,950,000.00.

4. Ordinances -

a. Final Reading of Ordinance 2026-11: Adopting an amendment to the sign ordinance to prohibit stakes, poles, piers, and other sign structures within 50 feet of the mean high or visible water line along the Gulf, specifying exceptions and permit requirements, and detailing standards for type, number, dimensions, density, and illumination of signs, along with removal requirements.

AN ORDINANCE OF THE CITY OF ST. PETE BEACH, FLORIDA, AMENDING THE LAND DEVELOPMENT CODE RELATING TO SIGNS BY CREATING SUBSECTION 26.14.(w) TO PROHIBIT SIGNS, POSTS, AND POLES WITHIN FIFTY (50) FEET OF THE MEAN HIGH OR VISIBLE WATER LINE OF THE GULF; REQUIRING A PERMIT FOR INSTALLATION OF SIGNS ON THE BEACH; PROVIDING FOR RECITALS, CODIFICATION, CONFLICTS, SEVERABILITY, CORRECTION OF SCRIVENER'S ERRORS, CONSTRUCTION, PUBLICATION, AND AN EFFECTIVE DATE.

Action Options: Motion to [adopt/adopt with modification/deny/continue to [specify date certain]] Ordinance 2026-11.

5. Action Items -
    a. City Manager Annual Evaluation
6. Items for Discussion -
7. City Clerk, City Manager, City Attorney and City Commission Reports -
8. Adjournment -

APPEAL: In accordance with 286.0105, Florida Statute (Notices of meetings and hearings must advise that a record is required to appeal), if a person decides to appeal any decision made by this committee, board, agency, or commission with respect to any matter considered at this meeting or hearing, he or she will need a record of the proceedings, and that, for such purpose, he or she may need to ensure that a verbatim record of the proceedings is made, which record includes the testimony and evidence upon which the appeal is to be based.

AMERICANS WITH DISABILITIES ACT (ADA): In accordance with the Americans with Disabilities Act and Florida Statutes, if any person with a disability defined by the ADA needs special accommodation to participate in this proceeding, then not later than two business days prior to the proceeding, he or she should contact City Hall at (727) 367-2735.

PUBLIC COMMENT INSTRUCTIONS FOR THOSE NOT PHYSICALLY PRESENT:
The City has made accommodations for those who cannot be physically present or do not feel comfortable appearing in person. If a member of the public would like to provide comments for the meetings, they may do so in the following ways:

- Email the City Clerk by 12:00 p.m. on the day of the meeting at cityclerk@stpetebeach.org
- Leave a voicemail message by calling **727.363.9225** by 12:00 p.m. the day of the meeting

In your three (3) minute or less comment, please be sure to include your name and address for the record.

The public is cordially invited to attend this meeting.
All agenda material is available for review at City Hall or www.stpetebeach.org.

City Commission Work Session
June 9, 2026
3:00 p.m.

ELECTED OFFICIALS PRESENT:
Scott Tate, Mayor
Karen Marriott, Commissioner, District 1
Lisa Robinson, Vice Mayor, Commissioner, District 2
Al Causey, Commissioner, District 3
Jon Maldonado, Commissioner, District 4

STAFF PRESENT:
Frances Robustelli, City Manager
Ralf Brookes, City Attorney
Ginny Bodkin, Deputy City Clerk
Adam Poirrier, Assistant City Manager
Devon Schmidt, Finance Director
Candyce Galloway, Technology & Innovation Director

Mayor Tate called the meeting to order at 6:00 p.m., followed by the Pledge of Allegiance.

1. PRESENTATIONS

a. 2025-2026 Strategic Plan

Candyce Galloway, Director of Technology, explained that today's session would use the framework that has already been built and the priorities indicated in Commissioner surveys to discuss progress and measurement, benchmarking, organizational and culture shifts, and choose a path forward. Her presentation is part of the meeting record.

Ms. Galloway explained that staff has developed a simple framework based on Commission workshops and feedback, produced a two-year strategic roadmap, aligned strategic projects to the adopted strategic pillars, and begun developing KPIs and metrics to measure progress. The pillars identified were Community Prosperity, Operational Excellence, Resilience/Recovery/Sustainability, Economic Growth and Development, and Reliable Infrastructure. Survey results showed broad alignment among Commissioners, staff, and leadership around serving residents, fiscal responsibility, service excellence, infrastructure and recovery priorities, resident-first governance, and preservation of community character.

Ms. Galloway stated that the City is moving from broad themes and recovery-focused priorities toward long-term planning with clearer prioritization, measurable outcomes, and ongoing reporting. She described draft strategic dashboards, existing public transparency tools such as the CIP dashboard, and planned KPI-based reporting. Staff reported that approximately 73% of active projects remain concentrated in infrastructure and recovery-related pillars, reflecting continued recovery demands. She also summarized benchmarking of approximately 20 peer communities and stated that the City is already ahead of many peers in public project portfolio reporting, with the target being live dashboards, KPI tracking, and regular department-level reporting.

Ms. Galloway presented three potential paths for advancing the City's strategic planning efforts beyond the current two-year roadmap, asking for Commission guidance:

Option A – Full External Support
- Hire an outside consultant to lead the strategic planning process.
- Consultant would facilitate community engagement, surveys, focus groups, workshops, and development of a longer-term strategic vision.
- Provides dedicated expertise and a turnkey approach but comes with the highest cost.

Option B – Continue In-House
- City staff would continue refining and implementing the existing strategic plan using available resources and time.
- Maintains momentum and minimizes costs but may limit the pace of progress and lacks a defined plan for broader community engagement.

Option C – Hybrid Approach (Staff Recommendation)
- Continue managing the strategic planning process internally while using outside consultants for targeted

support.
- Consultants would assist with community surveys, focus groups, stakeholder engagement, workshops, and analysis.
- Intended to provide meaningful public input, third-party facilitation, and community-facing deliverables while maintaining staff ownership of the process.
- Staff recommended this option as a balanced approach that accelerates planning efforts and strengthens community involvement without fully outsourcing the process.

Following her presentation, Ms. Galloway asked for Commission guidance and direction. Commissioners generally agreed that strategic planning has value and that broader community input should be part of the process. However, there was significant discussion about the scope, cost, and necessity of hiring outside consultants. There was support for the hybrid approach (Option C) because it would provide an independent, unbiased process and help ensure the strategic plan reflects community priorities rather than solely the perspectives of staff or the current Commission. It was noted that community engagement is important if the plan is intended to guide the City beyond the tenure of current elected officials. At the same time, multiple questions were raised about the proposed $42,000 hybrid option and the larger costs associated with a fully outsourced approach. Concerns were raised about current budget constraints, ongoing hurricane recovery efforts, and whether staff could accomplish much of the work internally. Commissioner Robinson questioned whether the City should spend additional funds on strategic planning when infrastructure and recovery projects remain pressing priorities and suggested the City could develop and administer its own survey.

Discussion also focused on the value of community surveys. There was general support for obtaining input from residents who do not typically attend meetings or contact the City, but some questioned whether a survey of approximately 200 respondents would adequately represent the community. It was noted that professionally designed surveys can provide statistically valid results and may be the most cost-effective way to gather broad community feedback. By the conclusion of the discussion, there appeared to be little support for the full consultant-led approach or for the full $42,000 hybrid package. Instead, many favored a more limited version of the hybrid approach that focused primarily on a professionally administered community survey and related analysis while avoiding more costly workshops and facilitation services.

The Commission did not make a final decision on a strategic planning option. Instead, the consensus direction was for staff to:
- Reevaluate the proposed options.
- Consider a scaled-down version of the hybrid approach.
- Focus on cost-effective methods for obtaining community input, particularly through surveys.
- Return with revised recommendations and additional information for future consideration.

Staff indicated they would take the Commission’s feedback and develop refined options for future discussion.

b. <u>Budget Workshop #2: Overview of the landscape, Feedback on the Rankings of CIP, Revenue Strategy Direction, Strategy of Building the FY2027 Budget</u>

Devon Schmidt, Finance Director, opened the budget discussion by noting that staff is bringing the Commission into the budget development process early, seeking guidance on capital improvement priorities, revenue strategies, and overall fiscal year 2027 budget direction.

A major focus of her presentation was a “Save Our Homes from Excessive Property Taxes” legislation that passed both chambers on June 2, 2026 and will appear on the November ballot. If approved, it would significantly increase Florida's homestead exemption and reduce the growth cap on non-homestead property assessments. She explained that these changes could reduce the City's property tax revenue by approximately $1.1 million in FY 2027 and $1.6 million in FY 2028, while also making it more difficult to raise property tax revenues because any

millage rate above the rollback rate would require a supermajority vote of the Commission.

Ms. Schmidt reviewed how the City is tracking future redevelopment projects and their potential impact on taxable value and revenue generation. While redevelopment is expected to generate additional tax revenue over time, staff emphasized that these projections are long-term forecasts and should not be relied upon as immediate solutions to budget challenges. She further noted that the proposed legislation could restrict the use of property tax revenues to specific purposes such as public safety, infrastructure, debt service, and retirement obligations. As a result, administrative and quality-of-life services may need to rely more heavily on alternative funding sources, including fees, parking revenues, and cost allocation methods. Budget balancing strategies under consideration include expenditure reductions, fee adjustments, enterprise fund restructuring, millage rate changes, and potential reductions in capital project funding.

Commission discussion primarily focused on understanding the long-term financial implications of the proposed property tax changes. Commissioner Marriott asked how much future redevelopment revenue could offset the projected loss in property tax revenue and sought clarification on how the rollback rate would function if the homestead exemption increases. Ms. Schmidt explained that the rollback rate calculations will become clearer once official figures are received from the county. Mayor Tate asked for clarification regarding redevelopment revenue projections and the assumptions behind the estimated increase in taxable value from future hotel redevelopment projects. It was also pointed out that redevelopment revenue forecasts are highly uncertain because some major projects may take many years to complete and are still subject to legal and economic uncertainties. Rebuilding activity following the hurricanes may not generate substantial new taxable value for homesteaded properties because of existing tax protections. Commissioner Causey highlighted the larger fiscal picture, noting that while the City may lose approximately $1.6 million annually from the homestead exemption changes and gain roughly $2 million annually from redevelopment over time, those figures are small compared to the City's much larger infrastructure, stormwater, wastewater, and hurricane recovery needs, which are projected to require tens or even hundreds of millions of dollars in investment over the coming years. Major Commission concerns included the potential impacts of the state property tax proposal, the limits of redevelopment revenue as a funding solution, and the need to develop long-term strategies to address significant infrastructure and recovery costs.

City Manager Frances Robustelli introduced Public Services Director Camden Mills who would be reviewing Capital Improvement Projects and seeking Commission feedback on whether to continue funding projects or not.

Mr. Mills presented the City's capital project prioritization framework and preliminary project rankings developed to assist with FY 2027 budget planning. He explained that projects were evaluated using a scoring system of 100 points based on factors such as public safety, regulatory requirements, infrastructure condition, resiliency, operational impacts, and funding opportunities. He noted that the rankings are intended to provide a consistent decision-making framework and that lower-ranked projects may still represent important community needs. He reviewed the information included in the project ranking matrix, including project scores, funding sources, current budget allocations, projected FY 2026 expenditures, proposed FY 2027 appropriations, seven-year cost projections, grant funding opportunities, and whether projects represent one-time or recurring investments. Additional information was provided regarding estimated operating and maintenance costs, expected asset service lives, and total long-term project costs for major infrastructure initiatives. The presentation highlighted the City's highest-ranked projects, which are primarily associated with wastewater, stormwater, critical facility, and infrastructure improvement needs. There was a handout provided that was made part of the meeting record. Mr. Mills noted that the purpose of the workshop was to obtain feedback on the project rankings, identify Commission priorities, discuss potential project tradeoffs, and confirm projects that are considered essential due to safety, operational, or regulatory requirements. There was a question regarding the distinction between resiliency projects and traditional stormwater infrastructure projects. Mr. Mills explained that stormwater projects generally relate to rehabilitation and replacement of existing infrastructure, while resiliency projects typically involve new infrastructure or increased levels of service designed to address long-term flooding and climate adaptation needs. He also noted that several resiliency projects are based on prior planning studies and that the ongoing Watershed

Management Master Plan will provide updated recommendations and priorities for future capital investments.

Discussion centered the project ranking methodology and there was a request for additional detail regarding the distinction between stormwater infrastructure projects and broader resiliency initiatives. There was interest in understanding how resiliency project costs relate to stormwater, wastewater, shoreline protection, and other infrastructure improvements, particularly given the significant long-term costs associated with resiliency projects. Mr. Mills explained that stormwater projects generally focus on rehabilitation and replacement of existing infrastructure, while resiliency projects are intended to provide new infrastructure or enhanced levels of service to address future flooding and adaptation needs. Discussion also focused on the role of grants, FEMA reimbursements, insurance recoveries, and other external funding sources in project prioritization. Additional information was requested to show where projects may be offset by grant funding, insurance proceeds, or FEMA reimbursements to better evaluate the City's actual financial obligations. Mr. Mills clarified the status of various grants and noted that many hurricane-related facility repair projects are expected to be funded through insurance and FEMA reimbursement programs. Several of the highest-ranked projects, including Fire Station 22, wastewater collection system improvements, facility repairs, and elevator rehabilitation projects were discussed. Several items were addressed, such as project timelines, total project costs versus annual appropriations, recurring versus one-time expenditures, and the importance of considering long-term maintenance obligations when evaluating capital investments. Mr. Mills explained that some recurring infrastructure programs require larger investments in the near term to address deferred maintenance, with lower annual costs anticipated once systems reach a more sustainable condition. City Manager Robustelli explained that most grant, insurance, and FEMA funding is reimbursable, requiring the City to fund projects upfront and then seek reimbursement, which may take months or years to receive. It was noted that insurance and FEMA reimbursements associated with the 2024 storms will be incorporated into future budget presentations as revenue projections become more certain, and that the City is currently managing 86 FEMA-related projects. Discussion also focused on the relationship between project rankings and available funding. Staff confirmed that the highest-priority projects identified in the ranking system represent approximately $23.3 million in proposed FY 2027 expenditures.

Mr. Mills reviewed shoreline protection and seawall-related capital projects, including citywide seawall improvements, the Pass-a-Grille seawall replacement, and the Don CeSar neighborhood resiliency initiatives. He explained that seawall projects range from minor repairs to full replacements, with replacement projects generally requiring construction to current code elevation standards. Discussion focused on the costs and benefits of raising seawalls, the relationship between city-owned and private seawalls, long-term resiliency planning, and potential impacts on adjacent properties. There were differing perspectives regarding the timing and prioritization of seawall elevation projects, while highlighting the need to protect public infrastructure and maintain consistency with adopted City policies. Discussion included grant funding opportunities, noting that some projects are partially dependent on state or federal grant awards that have not yet been secured. Staff clarified funding assumptions, project scopes, and the distinction between existing infrastructure repairs and broader resiliency improvements. Additional discussion addressed the Don CeSar neighborhood adaptation project, including the use of planning studies, grant eligibility considerations, and the need for further refinement of project costs and recommendations. There was discussion regarding the subaqueous wastewater force main replacement project, questioning its ranking relative to other infrastructure priorities. Mr. Mills advised that the existing force main remains serviceable but is approaching the end of its projected useful life, and that current funding is primarily intended to continue procurement and project development activities. Commissioners discussed the potential impact of future regional wastewater system discussions on the project and expressed interest in maintaining flexibility while evaluating long-term wastewater service options. Discussion concluded with a review of the project prioritization methodology and the importance of appropriately ranking and evaluating critical infrastructure, wastewater, and resiliency projects as part of the City’s long-term capital improvement planning process.

Mayor Tate noted time constraints associated with completing the budget workshop before the regular meeting. There was consensus to adjourn the work session and continue the budget discussion following the regular Commission meeting.

Mayor Tate adjourned the meeting at 5:47 PM.

MINUTES APPROVED: JUNE 23, 2026

RENEE ROSE	SCOTT TATE
CITY CLERK	MAYOR

City Commission Meeting
June 9, 2026
6:00 p.m.

ELECTED OFFICIALS PRESENT:
Scott Tate, Mayor
Karen Marriott, Commissioner, District 1
Lisa Robinson, Vice Mayor, Commissioner, District 2
Al Causey, Commissioner, District 3
Jon Maldonado, Commissioner, District 4

STAFF PRESENT:
Frances Robustelli, City Manager
Ralf Brookes, City Attorney
Ginny Bodkin, Deputy City Clerk
Adam Poirrier, Assistant City Manager
Brandon Berry, Senior Planner
Devon Schmidt, Finance Director

Mayor Tate called the meeting to order at 6:00 p.m., followed by the Pledge of Allegiance.

1. APPROVAL OF THE AGENDA

City Manager Frances Robustelli requested to move item 5a, Authorization to Execute 8th Addendum, to after item 3a, as PSTA representatives were present. Member Causey requested to pull item 4a, Ordinance 2025-02, from the agenda to a future meeting.

Discussion followed regarding significant public feedback calling for greater community engagement before any action is taken on the beach ordinance. City Attorney Brookes noted that the City plans to hold a seminar on the Customary Historical Use Doctrine, which he will present on July 23, 2026. Commissioner Robinson highlighted the importance of not putting the cart before the horse when considering potential rules and regulations.

Motion: **Commissioner Causey moved, Vice Mayor Robinson seconded to move item 4a, First Reading Ordinance 2025-02, to a date to be determined or after a community engagement meeting. The motion carried 5-0.**

Motion: **Commissioner Marriott moved, Vice Mayor Robinson seconded, and the motion carried 5-0 to approve the June 9, 2026 City Commission Agenda, as amended.**

2. AUDIENCE COMMENTS

Kathy Garchow, Casablanca Ave., commented on the need for project-based accounting. She shared a presentation on the issues with the stormwater system in the DonCesar neighborhood due to its lower elevation. Proper slope and capacity are critical for flood prevention. Pump stations and force mains are an essential need.

John Kurzman, Bahia Honda Way, thanked the Commission for the decision to delay the first reading of the beach ordinance and spoke about customary use and a potential sign ordinance.

Kyle Fleming, Owner of Kyle Fleming Photography, spoke about potential restrictions on beach photography and requested that any regulations accommodate small-scale photographers who often receive short-notice bookings.

Deb Schechner, Boca Ciega Isle Dr., supported addressing customary use before further beach ordinance changes, raised concerns about a private property being used for parking and storage, and requested an update on the mothball investigation due to concerns about wildlife and public safety.

Dana Richardson Bahama Way S., thanked the Commission for its action and requested greater resident involvement in the beach ordinance development process, including opportunities for input comparable to those provided to other stakeholder groups.

3. CONSENT

a. Approval of the May 26, 2026 City Commission Meeting Minutes

Motion: **Commissioner Marriott moved, Vice Mayor Robinson seconded, and the motion carried 5-0 to approve the June 9, 2026 City Commission agenda.**

5. ACTION ITEMS (Moved)

a. Authorize the City Manager to execute the Eighth Addendum and Renewal with the Pinellas Suncoast Transit Authority for the Suncoast Beach Trolley Agreement for Fiscal Year 2026 transit service for $308,279.51.

Assistant City Manager Adam Poirrier introduced the eighth addendum to the City's agreement with PSTA for the Suncoast Beach Trolley program. He explained that the agreement funds the Suncoast Beach Trolley service, Route 90 commuter service connecting the beach via the Bayway, and paratransit services available to City residents. He introduced Darden Rice from PSTA.

Ms. Rice reaffirmed PSTA's commitment to its partnership with the City. She acknowledged communication and administrative issues related to the agreement renewal process and explained that PSTA has implemented new internal procedures and project management systems to improve oversight and coordination. To address the issue, PSTA agreed to honor the amount budgeted by the City for FY 2026 rather than the higher amount reflected in the draft agreement. PSTA also committed to working with City staff well in advance of the FY 2027 budget process to review service needs, discuss projected costs, and improve communication to avoid future discrepancies. The presentation concluded with PSTA expressing its desire to maintain a collaborative relationship with the City.

Commissioners thanked PSTA for reducing the FY 2026 contract amount to align with the City's budgeted funding. Discussion included transit ridership trends, funding sources, and service utilization. PSTA provided ridership data for the Suncoast Beach Trolley, Route 90, and SunRunner services, noting that beach trolley ridership has generally remained strong while Route 90 ridership has declined. PSTA also identified the City's highest-use transit stops, including the stop near City Hall, the St. Pete Beach Access/SunRunner terminal, the 75th Avenue transfer location, and the Tradewinds area. Discussion included an overview of PSTA's funding structure and the City's status as a non-member jurisdiction that contracts separately for transit services rather than contributing ad valorem taxes to PSTA. Discussion also included paratransit services available to St. Pete Beach residents, including annual usage levels and the relationship between fixed-route transit service and eligibility for PSTA Access transportation services. Additional questions focused on rider demographics, destinations, and the balance of resident and visitor use of transit services serving St. Pete Beach.

PUBLIC COMMENT

John Kurzman, Bahia Honda Way, supported continued trolley service but expressed concerns about the size of the SunRunner on Gulf Blvd, citing safety concerns and conflicts with bike lanes. He suggested limiting the SunRunner to areas north of St. Pete Beach and relying on the trolley for service along the southern beaches.

The question was raised whether the SunRunner vehicles are wider than the travel lanes on Gulf Blvd and concerns were expressed regarding buses remaining within their designated lanes. PSTA staff responded that SunRunner vehicles are standard transit width and stated that safety remains a top priority. PSTA representatives indicated they would further review the concerns raised regarding lane positioning and vehicle operations to ensure the continued safe movement of transit vehicles, motorists, bicyclists, and pedestrians. There were follow-up questions regarding SunRunner vehicle dimensions, mirror configurations, and safety concerns related to operating within the travel lanes on Gulf Boulevard. PSTA representatives stated that vehicle width measurements include mirrors and advised that they have reviewed concerns raised by operators regarding clearance around fixed objects and are evaluating potential adjustments while maintaining safety standards. PSTA also agreed to provide the City with additional ridership and performance data discussed during the presentation. Discussion included the value of public transit services, including beach trolley service and paratransit transportation for residents with disabilities, while acknowledging community concerns regarding costs. Discussion highlighted the importance of evaluating transit services and funding levels during the upcoming budget cycle. Commissioners

noted PSTA's willingness to reduce the FY 2026 contract amount to the level previously budgeted by the City and expressed support for approving the agreement while continuing broader discussions regarding future transit services and funding.

Motion: **Commissioner Marriott moved, Vice Mayor Robinson seconded, and the motion carried 5-0 to authorize the City Manager to execute the PSTA contract at the amended amount.**

4. ORDINANCES

a. ~~First Reading Ordinance 2025-02: Creating Chapter 95. Beaches of the City Code of Ordinances, and adopting and modifying standards pertaining primarily to behavior, conduct, development, permitting, and maintenance on and of the City's beaches~~

Removed for discussion at a future meeting.

b. First Reading Ordinance 2025-16: Amending Land Development Code Division 44; renaming the division "Marine Turtle and Coastal Wildlife Protections", updating technical standards, providing requirements for special events, specifying property modifications triggering compliance with lighting and screening standards, and setting penalties and enforcement entities.

AN ORDINANCE OF THE CITY OF ST. PETE BEACH, FLORIDA FOR THE PURPOSE OF RENAMING LAND DEVELOPMENT CODE DIVISION 44 – MARINE TURTLE PROTECTION TO DIVISION 44 - MARINE TURTLE AND COASTAL WILDLIFE PROTECTIONS; AMENDING SECTIONS 44.1. THROUGH 44.9., AND ADOPTING SECTIONS 44.10 THROUGH 44.14., TO UPDATE TECHNICAL STANDARDS, CLARIFY REQUIREMENTS FOR NEW AND EXISTING DEVELOPMENT AND SPECIAL EVENTS, MODIFY PENALTIES, COMPLIANCE AND ENFORCEMENT MEASURES, SPECIFY RESPONSIBLE PARTIES, AND UPDATE DEFINITIONS, TO BETTER SERVE THE PURPOSE AND INTENT OF THE DIVISION AND ALIGN WITH FLORIDA DEPARTMENT OF ENVIRONMENTAL PROTECTION AND FISH AND WILDLIFE COMMISSION BEST PRACTICES; PROVIDING FOR CODIFICATION; CONFLICTS; SEVERABILITY; CORRECTION OF SCRIVENER'S ERROR; CONSTRUCTION; PUBLICATION; AND AN EFFECTIVE DATE.

Attorney Brookes read Ordinance 2025-16 in title only.

Senior Planner Brandon Berry presented a proposed ordinance updating the City's marine turtle protection and beachfront lighting regulations. The ordinance updates the City's existing 2007 standards to align with the State of Florida's 2020 model lighting ordinance and was developed with input from the Beach Stewardship Committee, Planning Board, the Sea Turtle Conservancy, the National Wildlife Federation, the public, local hoteliers, and the Tampa Bay Beaches Chamber of Commerce. He explained that the ordinance was intentionally drafted to comply with Senate Bill 180 and focuses on lighting, maintenance, repair, and operational standards rather than imposing new development restrictions. The presentation outlined several proposed changes, including updated technical lighting standards, requirements for long-wavelength lighting, definitions for shielded and full-cutoff fixtures, standards for window tinting and visible light transmittance, regulations for lighting associated with pools and special events, and updated enforcement and penalty provisions. The ordinance would also require annual reporting, encourage the use of native vegetation for screening, and establish restrictions on transient lighting during marine turtle nesting season. He reviewed comments received from hoteliers and business representatives and explained modifications incorporated into the draft ordinance. Discussion included standards for turtle-friendly glass and window film, visible light transmittance requirements, fireworks restrictions during shorebird and turtle nesting seasons, enforcement responsibilities, and exemptions for beach weddings. Mr. Berry also noted that the ordinance had been intended to work in conjunction with a related ordinance that was continued and identified provisions that may require revision depending on future Commission action regarding the companion ordinance.

Commissioners discussed several provisions of the proposed ordinance, including lighting visibility standards, compliance triggers for redevelopment projects, transient and handheld lighting restrictions, enforcement procedures, screening vegetation requirements, window tinting standards, and fireworks regulations. Questions were raised regarding how visibility would be measured, applicability to condominiums and residential properties, and the need for additional clarity regarding enforcement and compliance requirements. There was interest in ensuring the ordinance does not create unintended consequences for residents and property owners, particularly regarding transient lighting, open doors and windows, and existing property conditions. Discussion also focused on whether future window tinting standards should automatically track state model ordinance updates or remain aligned with county requirements. Additional suggestions included clarifying grandfathering provisions for existing vegetation and specifying inspection expectations. It was noted that portions of the ordinance were closely connected to the companion ordinance that had been continued and suggested that both items be considered together. There was discussion that this needed additional outreach and input from beachfront condominium owners and residents before taking action.

Stacey Gallagher, Sea Turtle Conservancy, spoke in support of the proposed ordinance updates, noting that advances in research and lighting technology since 2007 justify revising the City's regulations. She commended provisions requiring long-wavelength lighting, updated lighting definitions, and protections against wildlife harassment from transient lighting. She also recommended reducing the allowable visible light transmittance standard for window treatments from 45% to 30% or less, citing research indicating improved effectiveness in reducing sea turtle disorientation. She thanked the City for its commitment to protecting sea turtles and coastal wildlife while updating its lighting standards.

PUBLIC COMMENT

Cindy Perry, Boca Ciega Isle Dr., representing St. Pete Audubon, provided information on black skimmers and their nesting behavior. She discussed protections for the species under state regulations and described how fireworks, drones, and other disturbances can disrupt nesting colonies, harm chicks, and reduce nesting success. She noted that St. Pete Beach hosts one of the state's largest black skimmer colonies and highlighted the importance of protecting nesting habitat during the breeding season.

Joe Widlansky, St. Petersburg, Sea Turtle Trackers, discussed sea turtle nesting challenges, highlighting the impacts of artificial lighting, beach activities, shark fishing, and other disturbances on nesting turtles and hatchlings. He supported continued enforcement of the City's lighting ordinance and encouraged greater public education regarding turtle-friendly lighting. Commissioners asked questions regarding false crawls, hatchling losses, shark fishing activity, and turtle-safe lighting options. Discussion included the need for continued outreach to visitors and beachfront properties regarding sea turtle protection measures.

Deb Schechner, Boca Ciega Isle Dr., spoke in support of turtle-safe red flashlights and suggested providing beach ordinance guidance to the Sheriff’s Office to improve enforcement awareness. She encouraged increased public and hotel guest education regarding sea turtle and shorebird nesting protections and noted the importance of minimizing disturbances to nesting wildlife.

Dana Richardson, Bahama Way S., Spoke in support of delaying consideration of the ordinance for further review. She encouraged expanded public education on sea turtle protection, questioned responsibility for beach maintenance during nesting season, and suggested additional measures to reduce obstacles for nesting turtles, including management of beach furniture and debris.

John Kurzman, Bahia Honda Way, spoke in support of additional public workshops on sea turtle protections and encouraged balancing wildlife protection with resident needs. He raised concerns regarding proposed lighting requirements, ordinance definitions, and potential impacts on homeowners, and suggested further review and clarification before adoption.

Kevin Reali, Tampa, worked with staff on the proposed beach ordinances and noted efforts to identify and correct legal inconsistencies in the current code. He recommended that related ordinance amendments be considered together to avoid conflicts and ensure consistency between provisions.

Commission discussion highlighted concerns raised during public comment regarding drone disturbances and the use of bright searchlights by fishermen near the beach, suggesting these issues may warrant future consideration. There were shared concerns expressed by residents, businesses, pedestrians, and motorists regarding the reduced visibility associated with amber street lighting along Gulf Boulevard. Discussion focused on potential safety impacts for drivers and pedestrians, particularly at crosswalks where the amber street lighting may reduce contrast with existing crossing signals. Discussion highlighted the importance of balancing wildlife protection measures with public safety needs and evaluating opportunities to improve visibility while maintaining compliance with turtle-friendly lighting standards.

Motion: **Vice Mayor Robinson moved, Commissioner Causey seconded, and the motion carried 5-0 to continue Ordinance 2025-16 to a date to be determined along with Ordinance 2025-02.**

5. ACTION ITEMS

~~a. Authorize the City Manager to execute the Eighth Addendum and Renewal with the Pinellas Suncoast Transit Authority for the Suncoast Beach Trolley Agreement for Fiscal Year 2026 transit service for $308,279.51.~~ Moved after 3. Consent Items.

6. ITEMS FOR DISCUSSION

1. **Continuation of budget workshop #2 Overview of the landscape, Feedback on the Rankings of CIP, Revenue Strategy Direction, Strategy of Building the FY2027 Budget** (Added)

At 7:57 PM Mayor Tate continued the discussion from the 3PM Commission Work Session as was moved during that meeting.

Public Service Director Camden Mills resumed his presentation with Moderate Ranked Projects.

- Projects 22-28 – There was discussion on pausing funding on #27 (Don CeSar & Boca Ciega Area Resiliency Adaptation) until the completion of the WSP Engineering Study. Finance Director Devon Schmidt confirmed that capital projects can be adjusted at mid-year or any time during the year. The final decision was to keep the funding allocated as is. Commissioner Causey requested more specificity on resiliency projects. Mr. Mills made note. No changes recommended in this section.

Road resurfacing was discussed including bringing patch back up to level on road. It would be beneficial to coordinate reclaimed water laterals with road resurfacing.

- Projects 31- 40 – No changes were recommended.
- Projects 40 - 49 - No changes were recommended.
- Projects 51 -57 - It is unknown if the $104,999 would cover repairs of the Merry Pier (#56). The City could explore leasing space. The City Manager noted that if the bait shack cannot be rebuilt, it will be $68-70K to demo. Project #59 (Fishing Piers Rehabilitation) can be reallocated mid-year if necessary. No changes were recommended.

Lowest Ranked Projects

- Projects 60 - 67 - Put off Project #60 (Wastewater Service Laterals Smoke Testing) one year at least.
- Projects 68 - 76 – Project #73 (Foot Shower and Drainage Improvements) move to 2031 and change the name.
- Project #76 to properly reflect city assets only. Project #71 (Horan Park Docks) is not proposed for 2027.
- Projects 78 – 81 - Move Project #80, Fire Station 23 Painting, to another year.

Following the project rank review, Ms. Schmidt reviewed the FEMA Public Assistance national workflow, explaining the reimbursement process from project submission through final closeout. She reported that the City currently has 86 FEMA-related projects associated with Hurricanes Helene and Milton and has received obligated funding for debris removal and debris monitoring projects. She noted that future budget presentations will include additional detail regarding project-specific FEMA reimbursements and funding status. She also reviewed recommendations received from the Finance and Budget Review Committee, including requests for a consolidated project ranking presentation and exploration of additional funding opportunities. Discussion then shifted to potential revenue strategies, including bed tax utilization for eligible capital projects, fire assessments, resiliency-related funding mechanisms, grants, and legislative appropriations. Discussion contemplated pausing further action on the proposed CRA pending the outcome of a statewide property tax ballot measure and requested additional information regarding the potential impacts of proposed assessments and fees on property owners before considering future action.

Assistant City Manager Adam Poirrier spoke on the potential use of a fire assessment fee as a funding mechanism to offset fire protection costs and free General Fund revenues for other capital needs. He explained that implementation would require a detailed nexus study to determine a fair allocation of costs between residential and commercial properties based on fire service demand and call volume. He noted that similar assessments in other Florida communities typically result in residential charges in the hundreds of dollars annually and require voter approval through a referendum. Discussion focused on the purpose of a fire assessment as a user-based funding model rather than a general tax increase, with commissioners noting that a study could identify whether certain property types generate a disproportionate demand for fire services. Mr. Poirrier advised that pursuing the assessment would require approximately $85,000 for a professional study and a multi-year public engagement and evaluation process. The Commission expressed support for budgeting funds to conduct the study and further evaluate the feasibility of a fire assessment fee.

City Manager Robustelli shared several potential revenue strategies identified by the Finance and Budget Review Committee. She explained that a resiliency fee would require a nexus study to determine an equitable funding model and could potentially be structured through utility billing or a similar assessment mechanism. Enterprise fund fee studies, grants, and resident services fees are already underway and will be presented to the Commission as part of the upcoming budget process. Discussion also included a potential parking-based street repair assessment, which would evaluate whether commercial properties could contribute toward roadway maintenance based on parking demand and usage. Additional discussion focused on public-private partnerships, philanthropic donations, naming opportunities, and the potential creation of a community foundation model similar to those used by other municipalities. Commissioners expressed general support for exploring partnership and philanthropic opportunities on a case-by-case basis as potential supplemental funding sources for community projects and amenities.

Finance Director Schmidt discussed the use of bonds, public-private partnerships, assessments, grants, and other revenue sources. She explained the differences between general obligation bonds, revenue-backed bonds, and public-private partnerships, noting that major infrastructure investments will likely require long-term financing tools. Discussion included the need to better define project costs through ongoing studies before pursuing bond financing and the importance of understanding associated timelines, legal requirements, and consulting costs. There was support for continuing to evaluate bonding options for future wastewater, stormwater, drainage, and resiliency projects, with recognition that additional project scoping and financial analysis are needed before proceeding. Staff were
directed to provide estimated costs and timelines associated with exploring bond financing options. Additional discussion addressed potential short-term rental registration fees, opportunities to increase tourism promotion through local and county partnerships, and the review of fees associated with commercial beach activities. Ms. Schmidt also provided an overview of budget development assumptions, including legislative uncertainty related to property taxes, inflationary pressures, insurance costs, rate studies, and maintaining current staffing levels.

Staff will incorporate Commission feedback into the preliminary FY 2027 budget and continue evaluating identified revenue strategies.

Motion: **Vice Mayor Robinson moved, Commissioner Maldonado moved to extend the meeting to 10:10 PM. The motion carried 4-1 with Commissioner Marriott voting no.**

7. CITY CLERK, CITY MANAGER, CITY ATTORNEY, AND CITY COMMISSION REPORTS

Ginny Bodkin, Deputy City Clerk – nothing to report.

Frances Robustelli, City Manager – nothing to report.

City Attorney Brookes – nothing to report.

Commissioner Maldonado – He thanked the outgoing Vina Del Mar Island Association board members and welcomed and congratulated the new board members.

Commissioner Causey – nothing to report.

Vice Mayor Robinson – She thanked Planning Manager Kristin Coman, Senior Planner Brandon Berry, and Community Development Director Laura Canary for their workshop on historic designation.

Commissioner Marriott – nothing to report.

Mayor Tate – He thanked staff for the hard work put into the budget presentations. He highlighted the July 4th celebration and announced that he will be in a dunk tank that evening.

Mayor Tate adjourned the meeting at 10:00 pm.

MINUTES APPROVED: JUNE 23, 2026

RENEE ROSE
CITY CLERK

SCOTT TATE
MAYOR

CITY COMMISSION MEETING
CITY OF ST. PETE BEACH
COMMISSION CHAMBERS

Agenda Report

Agenda Title Name: Authorize the ratification of the tentative collective bargaining agreement (CBA) Article 24: Pay Plan (Wage Reopener) reached between City Administration and the International Association of Firefighters (IAFF) Local 4966 for the period October 1, 2026 – September 30, 2028.

Action Request: Motion to authorize the ratification of the tentative collective bargaining agreement (CBA) Article 24: Pay Plan (Wage Reopener) reached between City Administration and the International Association of Firefighters (IAFF) Local 4966 for the period October 1, 2026 – September 30, 2028.

Strategic Objective: Operational Excellence

Date: June 23, 2026

Prepared By: Adam Poirrier, District Chief

Through: Frances Robustelli, City Manager

Summary of Issue:

Authorization is requested to ratify the tentative contract agreement Article 24: Pay Plan (Wage Reopener) reached between City administration and the IAFF for the period October 1, 2026 – September 30, 2028.

On September 22nd, 2025, the City Commission approved authorization to ratify the tentative agreement reached with the IAFF. Under the tentative agreement, members covered under the agreement shall be paid in accordance with the Pay Plan during the term of the CBA. Wages were set for FY26 with wage reopener discussions set for FY27 and FY28.

On February 23rd, 2026, and May 13th, 2026, wage reopener negotiations were conducted, leading to agreed-upon terms for FY27 (wages effective October 1, 2026) and FY28 (wages effective October 1, 2027):

- FY27 – All Positions would be brought to the 60th Percentile based on local departments utilized by the city in previous negotiations.
- FY28 – The Pay Plan will be increased based on the May 2027 U.S. Bureau of Labor Local CPI.

The agreed-upon terms were for members to progress to the next higher STEP on their anniversary date as illustrated in Appendix I Pay Plan, which was already approved in Article 24.

These changes are intended to maintain the City's competitiveness with nearby communities and ensure the ability to retain and attract top talent, leading to exceptional public safety.

IAFF Local 4966 members conducted a ratification vote on June 1st, 2026, and June 2nd, 2026, resulting in 17 votes to accept and 8 votes to reject (76% participation rate).

The cost of the pay plan changes and increases is approximately $196,185 and will be included in the proposed FY27 budget. Additionally, over 50% ($98,093) of the increase will be covered by the Advanced Life Support-First Responder contract with Pinellas County.

Funding: Expenditures will increase as stated in the Summary of Issue and will be included in the proposed FY27 budget. As mentioned, over 50% of anticipated cost increases will be covered by the Advanced Life Support-First Responder contract with Pinellas County.

Attachments:
1. IAFF_Article 24_City_V1_FY27
2. IAFF_Appendix I_City_V1_FY27

Version	L-4966 TA	City TA	Date
1			05/13/2026

ARTICLE 24: PAY PLAN

24.1 Annual Base Salary and Classifications.

A. Members covered by this Agreement shall be paid in accordance with the Pay Plan during the term of this Agreement. The Pay Plan for the period of this contract is set forth in Appendix I.

B. Firefighter/EMT status shall be considered to be the minimum requirement for employment with the City. Status in other classifications shall determine eligibility for manning in the other classifications.

Members assigned to other classifications shall be expected to retain their eligibility for their respective assignments. Should a member fail to retain eligibility in an assigned classification, the member shall be reassigned to another status for which the member is eligible in accordance with the provisions of Article 21, Seniority, Layoff and Recall, provided a position in another classification for which the member is eligible is available. Should a position not be available, the member shall be terminated or, at the discretion of the City, transferred to another department or division.

C. A firefighter is a member who meets the minimum standards established for a firefighter by the State of Florida.

D. A firefighter/EMT is a member who has successfully completed and passed an EMT training program recognized by the department and who has met such other qualifications as may be established by the State of Florida to be an EMT.

E. A firefighter/Paramedic is a member who has successfully completed and passed a paramedic training program recognized by the department and who has met such other qualifications as may be established by the State of Florida to be a paramedic.

F. A Lieutenant is a member who works in a supervisory position over shift personnel and will be classified as an EMT or Paramedic based on his current qualifications established by the department and the State of Florida for such certification.

24.2 Progression in the Pay Plan.

The City shall complete a performance evaluation on each employee annually on or before the employee's anniversary date. The annual performance evaluation shall determine the member's eligibility to progress in the Pay Plan. The City shall be entitled to change the method of the performance evaluation unilaterally. Progression of the Pay Plan during this contract period in a fiscal year (FY) will be as follows:

A. For FY 2026: Members will be placed in the new pay plan, illustrated in Appendix I Pay Plan, at the closest STEP that ensures a minimum of a 3% increase. Members will progress to the next higher STEP on their anniversary date.

~~B.~~ For FY 2027: ~~The contract will be reopened to address Article 24/Appendix I.~~Members will be placed in the new pay plan based on their current step as of 10/1/2026, illustrated in Appendix I Pay Plan. Members will progress to the next higher STEP on their anniversary date.

C. For FY 2028: ~~The contract will be reopened to address Article 24/Appendix I.~~The pay plan (max.

Version	L-4966 TA	City TA	Date
1			05/13/2026

Step) will be increased based on the May 2027 U.S. Bureau of Labor Local CPI. Members will be placed in the new pay plan based on their current step as of 10/1/2027. Members will progress to the next higher STEP on their anniversary date.

D. Employees have no expectation of any increase in their wages or benefits, including STEP increases, after the date of the termination of this Agreement absent a successor agreement or final action by the Legislative Body of the City pursuant to FS 447.403, providing for such increases or improvements.

E. Members shall only be awarded steps as outlined in the attached plan.

24.3 Extra Pay for Special Assignments or Certifications.

Employees shall be eligible for special pay based on State of Florida certification or special assignment by the Fire Chief as follows:

Certification	**Eligibility**	**Extra Pay**	**MAX/MIN Employees**
Engine and Truck Driver	When assigned	$1.00 per hour	N/A
Acting Lt.	When assigned	$2.00 per hour for hours worked in acting capacity	N/A
Acting Captain	When assigned	$2.50 per hour for hours worked in acting capacity	N/A
Acting District Chief	When assigned	$3.00 per hour for hours worked in acting capacity	N/A
Pump Operator (State of Florida Certification Required)	Must be a cleared department driver	$50.00 per month	Active driver for the department ONLY
Fire Officer I (State of Florida Certification Required)	Must be a cleared department acting officer	$50.00 per month	Active acting officers ONLY
Fire Officer II (State of Florida Certification Required)	Must be a cleared department acting captain and/or district chief	$50.00 per month	Active acting officers ONLY

A. Loss of Certification or removal from noted assignment will result in cessation of extra pay.

B. Employees are required to provide evidence satisfactory to the City of current certification and to notify the Chief immediately upon the loss of any certification.

Version	L-4966 TA	City TA	Date
1			05/13/2026

APPENDIX I: PAY PLAN

City of St. Pete Beach
IAFF Local 4966 Pay Plan

FY 2027	Current FY26	A	B	C	D	E	F	G	H	I
INSPECTOR	$50,857	$53,909	$56,746	$59,732	$62,876	$66,186	$69,669	$73,336	$77,196	$81,259
FF/EMT	$55,280	$58,612	$61,697	$64,944	$68,362	$71,960	$75,747	$79,734	$83,931	$88,348
FF/PM	$65,212	$69,714	$73,383	$77,245	$81,310	$85,590	$90,095	$94,837	$99,828	$105,082
LT/EMT	$75,612	$88,599	$93,263	$98,171	$103,338	$108,777	$114,502			
LT/PM	$81,428	$90,627	$95,397	$100,417	$105,703	$111,266	$117,122			

CITY COMMISSION MEETING
CITY OF ST. PETE BEACH
COMMISSION CHAMBERS

Agenda Report

Agenda Title Name: Adopt Resolution 2026-20: Modifying and reapproving rules of procedure for the Historic Preservation Board, primarily to reduce the number of members required for conduct and approval of most business from four to three.

Action Request: Motion to adopt Resolution 2026-20.

Strategic Objective: Operational Excellence; Community Prosperity

Date: June 23, 2026

Prepared By: Brandon Berry, Senior Planner

Through: Frances Robustelli, City Manager

Summary of Issue: The Historic Preservation Board is the only appointed board or committee that requires a four of five member vote to conduct business. Under the span of Board responsibilities, only variances to the floodplain management regulations for historic structures require a four member vote, with other actions, such as local historic designation or certificates of appropriateness for demolition, requiring three.

Staff is requesting modification to the Board's rules of procedure to allow for three members to constitute a quorum for consideration of any application except for requests to the floodplain management regulations, which will require four members. At least three members will be required to authorize any request, including recommendations made by the Board as a body, except for floodplain management variance requests, which will require an affirmative vote from four members.

Funding: N/A

Attachments: 1. Resolution 2026-20

RESOLUTION NO. 2026-20

A RESOLUTION OF THE CITY OF ST. PETE BEACH MODIFYING AND REAPPROVING RULES OF PROCEDURE FOR THE ST. PETE BEACH HISTORIC PRESERVATION BOARD ORIGINALLY ADOPTED UNDER RESOLUTION 2004-24; RELAXING THE REQUIREMENTS FOR THE BOARD TO CONDUCT SPECIFIED BUSINESS; AND PROVIDING FOR AN EFFECTIVE DATE.

WHEREAS, the City Commission of the City of St. Pete Beach supports preservation of the City's historic resources.

WHEREAS, in 2004, when the Historic Preservation Board was known as the Aesthetic and Historic Review Board, the Board adopted rules of procedure that, in part, required four of five members to be present to meet requirements for a quorum and be able to transact business.

WHEREAS, per Ordinance 2006-08, the City Commission is now the authority to amend, modify, and make effective Board rules and regulations.

WHEREAS, the requirement to have four members present to conduct business is stricter than required for any other Board of the City, and is not required for any action taken by the Board under other regulations contained within the City's codes, except for variances to the floodplain management regulations.

WHEREAS, the National Parks Service advises that a simple majority is the preferred method for consent and approving items, per correspondence with the Florida Bureau of Historic Preservation.

WHEREAS, in order to allow for the conduct of business on a monthly basis outside of rare and unusual circumstances, Staff requests the City Commission authorize the Board to conduct business in the manner specified in the resolution.

NOW, THEREFORE, THE CITY COMMISSION OF THE CITY OF ST. PETE BEACH FLORIDA, HEREBY RESOLVES:

SECTION 1. Recitals. The above recitals ("Whereas" clauses) are hereby adopted as legislative findings, purpose and intent of the City Commission.

SECTION 2. The City Commission of the City of St. Pete Beach modifies the rules of procedure for the Historic Preservation as contained in EXHIBIT A to this resolution.

SECTION 3. This resolution shall take effect immediately upon adoption.

PASSED AND APPROVED BY THE CITY COMMISSION OF THE CITY OF ST. PETE BEACH, FLORIDA, THIS _____ DAY OF _____, 2026.

Content that is underlined, other than Articles and their numerals, is proposed for addition.
Content that is ~~stricken~~ is proposed for deletion.

CITY COMMISSION, CITY OF ST. PETE BEACH, FLORIDA.

Scott Tate, Mayor

ATTEST:

Renee Rose, City Clerk

Approved as to form and legal sufficiency for the use and reliance of the City of St. Pete Beach only:

Vose Law Firm LLP, City Attorney

Content that is underlined, other than Articles and their numerals, is proposed for addition.
Content that is ~~stricken~~ is proposed for deletion.

HISTORIC PRESERVATION BOARD

ST. PETE BEACH, FLORIDA

RULES OF PROCEDURE

ARTICLE I - General Governing Rules

The ~~Aesthetic and~~ Historic Preservation ~~Review~~ Board (hereinafter referred to as the Board) shall be governed by the provisions of all applicable federal, state and municipal statutes; inclusive of Division 28 (Historic Preservation) of the Land Development Code of the City of St. Pete Beach, Florida, as amended; and the rules of procedure~~s~~ set forth herein. ~~No rule herein shall be changed or waived without a vote of five (5) members of the Board.~~ The Board may request amendments or modification of these rules of procedure by the City Commission, who may approve or deny the request via a simple majority vote. These rules of procedure may also be amended by the City Commission via a simple majority vote without request by the Board.

ARTICLE II - General Governing Rules

1. The Board shall elect a Chair and a Vice-Chair annually in a month of the Board's choosing. The Vice-Chair shall be acting Chair in the absence of the Chair. The Chair and Vice-Chair shall serve for one year. The Chair and the Vice-Chair may serve only three consecutive terms.

2. The Chair shall preside at all meetings and hearings of the Board and decide all points of order and procedure. The Chair shall appoint any committees that may be found necessary.

3. The City Clerk's Office shall maintain the minutes of each meeting, including attendance, the vote of each member upon each question and the nature of comment and discussion upon each issue considered. The Planning Department shall provide to the Board such other assistance as may be reasonably necessary to properly address its responsibilities.

4. The procedure for elections for the office of Chair and Vice-Chair shall be as follows:

    a. Nominations for the office of Chair shall be made by any member of the Board. Board members may nominate themselves if they choose.

    b. A vote of the majority of the Board is required in order to conclude the election. If a majority is not attained on the first ballot, the candidate with the least number of votes shall be eliminated, and another ballot shall be held. Additional ballots shall be held if necessary, with candidates being eliminated, until one candidate has attained a majority of the votes, and is elected.

Content that is underlined, other than Articles and their numerals, is proposed for addition.
Content that is ~~stricken~~ is proposed for deletion.

c. The same procedure shall be followed for the election of the Vice-Chair.

ARTICLE III - Vacancies

If a member of the board fails to attend three consecutive meetings or four meetings in any one calendar year, such shall be considered resignation from the Board. Upon such resignation, resignation by other means or other vacancies occurring in office, the Chair shall inform the City Commission as promptly as possible, so that the City Commission may appoint a replacement to fill the unexpired term.

ARTICLE IV - Meetings

1. Meetings of the Board shall be held on the first Thursday of each month at 2:30 P.M., or otherwise as set by the Board and at such times as requested by City Commission. The Planning Department shall inform all members of the Board at least forty-eight (48) hours in advance of any meeting.

2. A quorum shall consist of four (4) members for the transaction of ~~all business~~any business that involves action on a variance from the floodplain management regulations requested pursuant to Section 28.16 of the Land Development Code. For all other business, a quorum shall consist of three (3) members.

3. The issuance of a variance from the floodplain management regulations shall be approved upon affirmative vote of no fewer than four members of the Board. Any other approval, recommendation, or action taken by the Board shall be issued upon affirmative vote of no fewer than three members of the Board.

~~3.~~ 4. No City staff person, nor any Board member, shall appear for or represent any person or firm in any matter pending before the Board. No Board member shall hear or vote upon any matter in which he is directly interested in a personal or financial way.

~~4.~~ 5. All meetings shall be open to the public. The order of business at meetings shall be at the discretion of the Chair.

~~5.~~ 6. During a public hearing, supporters of, and opposition to, any proposed action shall each be allowed a maximum of fifteen (15) minutes to present their argument. The Chair may request representatives of each side to speak for the entire group. If more than one speaker represents a group, the fifteen (15) minutes shall be divided among the various speakers. In no case, however, shall any group be allowed more than the allotted time, no matter how many speakers represent the group, except that time may be extended by unanimous vote of the members of the Board present. Written comments received before the meeting are encouraged.

~~6.~~ 7. At the public hearing, the applicant or any other party may appear on his own behalf or be represented by agent or attorney. No application shall be considered if the applicant or his agent does not appear; in such cases a new application must be filed in order for the Board to reconsider the request.

Content that is underlined, other than Articles and their numerals, is proposed for addition.
Content that is ~~stricken~~ is proposed for deletion.

~~7.~~ 8. An applicant may request his application be postponed until the next scheduled meeting of the Board upon written request received in the office of the Director of Planning no later than forty-eight (48) hours prior to the scheduled hearing. A majority of the Board members present at the scheduled meeting must subsequently vote to approve the request for postponement. In cases where action of the Board is required prior to consideration of an application by any other Board of Authority (as defined by Chapter 22 of the Code of Ordinances), the Board may grant postponement only of the hearing required before the ~~Aesthetic and~~ Historic Preservation ~~Review~~ Board. It shall remain the responsibility of the applicant to seek postponement of any other hearings scheduled by any other Board of Authority. Postponement of the required hearing at the applicant's request shall not constitute action by the Board as required by any provision of the Code of Ordinances.

ARTICLE V - Presentation of Evidence

1. Requests should be orally presented to the Board by Applicant, or his Representative, along with any documentation necessary.

2. The Board is permitted to ask any pertinent questions of the Applicant or his Representative to aid in their understanding of the case. The public shall not be permitted to ask questions of the Applicant or his Representative.

3. After such presentation by the Applicant, the Chair shall provide reasonable opportunity to address the Board for any person present who wishes to comment on the application.

4. Those appearing in opposition to the application should offer oral evidence and any documentation to show why granting the request would not be in the interest of the public.

5. The Board is permitted to ask any pertinent questions of anyone commenting on the application to aid in the Board's understanding of the case. The public shall not be permitted to ask questions of any person commenting upon an application.

6. All presentations and remarks by Applicant and other parties commenting on the application shall be directed to the Board.

ARTICLE VI - Certified Local Government Requirements

In order to establish and maintain Certified Local Government status, the ~~Aesthetic and~~ Historic Preservation ~~Review~~ Board shall undertake the following actions, as required:

1. Provide the State Historic Preservation Office with prior written notice of all meetings at least thirty (30) days in advance.

2. Provide the State Historic Preservation Office with meeting minutes within thirty (30) days of each meeting.

3. Provide the State Historic Preservation Office with meeting attendance reports within thirty (30) days of each meeting.

Content that is underlined, other than Articles and their numerals, is proposed for addition.
Content that is ~~stricken~~ is proposed for deletion.

4. Notify the State Historic Preservation Office of any change in board membership within thirty (30) days of action.

5. Immediately notify the State Historic Preservation Office of all new historic designations or alterations to existing designations.

6. Submit proposed amendments to the City's Historic Preservation Ordinance (Section 28 of the Land Development Code) to the State Historic Preservation Office for review and comment at least thirty (30) days prior to adoption.

7. Submit an annual report by November 1 to the State Historic Preservation Office covering the period October 1 through September 30, in accordance with specified requirements for format and contents.

CITY COMMISSION MEETING
CITY OF ST. PETE BEACH
COMMISSION CHAMBERS

Agenda Report

Agenda Title Name: Authorize the City Manager to execute a Services Agreement with Free Agent Marine LLC for Commercial Diving Services in the amount not to exceed $50,000 annually.

Action Request: Motion to authorize the City Manager to execute a Services Agreement with Free Agent Marine LLC for Commercial Diving Services in the amount not to exceed $50,000 annually.

Strategic Objective: Reliable Infrastructure

Date: June 23, 2026

Prepared By: Camden Mills, Public Services Director

Through: Frances Robustelli, City Manager

Summary of Issue: The City publicly advertised a Request for Bid (RFB) for qualified full-service commercial diving Contractors with experience in a wide range of applications. Eleven (11) responsive sealed bids were received on April 8, 2026. Dive-Tech International Inc., Free Agent Marine LLC, and See Dive LLC, were determined to be the lowest responsive and responsible bidders meeting all City qualification requirements.

The contract provides not-to-exceed unit prices for a qualified dive team, and all related diving equipment required to assist the City of St. Pete Beach with the cleaning, inspection, repair and maintenance of tide check valves, stormwater outfalls, manatee grates, subaqueous pipelines, piers, piles, and bulkheads. Services include:

- Debris Removal from Valve, Pipe, Endwalls, and Pit
- Marine Growth Removal from Valve, Pipe, Endwalls, and Pit
- Maintenance of Manatee Grates
- Written and Video Reports of condition per cycle
- Repair and Replacement of in-line and outfall-end type Tidal Check Valves
- Hydraulic Dredging

Work will be issued by task order on an as-needed basis, in an amount not to exceed $50,000 per year, subject to budgeted funds.

The initial agreement term is three (3) years, with up to two (2) additional one (1) year renewal options upon mutual agreement and annual appropriation.

Funding: 403.5380.546000 – Stormwater R&M Equipment ($287,996.80 remaining balance)

401.5350.546000 – Wastewater R&M Equipment ($102,791.25 remaining balance)

Attachments: 1. Free Agent Marine LLC Agreement Signed

CITY OF ST. PETE BEACH, FLORIDA
SERVICES AGREEMENT

Commercial Diving Services

This is an Agreement (the "Agreement") entered into by and between the **CITY OF ST. PETE BEACH** (hereinafter "City") and (**FREE AGENT MARINE LLC**). (hereinafter "Contractor"). The City and Contractor together shall be referred to as the "parties."

WHEREAS, The City properly issued a Request for Bids, attached and incorporated hereto as Exhibit "B" and the City Commission authorized the selection of Contractor at its June 23, 2026, public hearing.

WHEREAS, City desires to purchase from Contractor the services described in this Agreement.

WHEREAS, Contractor is in the business of providing the services described herein, and has submitted an appropriate proposal to the City to provide the same.

WHEREAS, this Agreement has been properly approved by the appropriate authority of the City and the Contractor.

NOW, THEREFORE, upon the mutual covenants contained herein, and other good and valuable considerations, the sufficiency of which is hereby acknowledged, the parties hereto hereby agree to the following:

1. Recitals. The foregoing recitals are true and correct and incorporated herein by reference.

2. Standard Contract Addendum. The attached Standard Contract Addendum, which contains all the Florida Statutorily required provisions applicable to this Agreement, is attached hereto as Exhibit "A" and its provisions modify and supplement this Agreement.

3. Scope of Services. The Contractor must perform all work for the City required by the contract documents as set forth below:

   a. Contractor will furnish all labor, materials, and equipment necessary as indicated in the Request for Bids (Exhibit "B") in the amount of Not To Exceed $50,000.

   b. Contractor must supervise the workforce to ensure that all workers conduct themselves and perform their work in a safe and professional manner. Contractor must comply with all OSHA safety rules and regulations in the operation of equipment and in the performance of the work. Contractor must at all times have a competent field supervisor on the job site to enforce these policies and procedures at the Contractor's expense.

   c. Contractor will provide the City with seventy-two (72) hours written notice prior to the beginning of work under this Agreement and prior to any schedule change with the exception of changes caused by inclement weather.

   d. Contractor must comply with any and all Federal, State, and local laws and regulations

now in effect, or hereinafter enacted during the term of this Agreement, which are applicable to the Contractor, its employees, agents or subcontractors, if any, with respect to the work and services described herein. The Contractor further warrants that there has been no violation of copyrights or patent rights either in the United States of America or in foreign countries in connection with the work of the contract.

e. Contractor warrants to the City that all goods and materials furnished under the contract will be new unless otherwise specified and that contractor possesses good, clear, and marketable title to said goods and there are no pending liens, claims, or encumbrances whatsoever against said goods. All work not conforming to these requirements, including substitutions not properly approved and authorized may be considered defective. Contractor further warrants that all goods, materials and workmanship furnished, whether furnished by the Contractor or its subcontractors and suppliers, will comply with the specifications, drawings and other descriptions supplied or adopted. Last, Contractor warrants all material and workmanship for a minimum of (1) year from date of project completion and acceptancy by the City. If within one (1) year after acceptance by the City, or within such larger period of time as may be prescribed by law any of the work is found to be defective or not in accordance with the contract documents, the Contractor will, after receipt of a written notice from the City to do so, promptly correct the work.

4. Damages. Time is of the essence in the performance of this Agreement. City shall be entitled to liquidated damages in the amount of $500 per day, for each day after the date set forth in paragraph 10, that Contractor has failed to properly and completely deliver all goods or provide all service specified herein. The Contractor specifically acknowledges that the foregoing sum is reasonable and does not constitute a penalty.

5. Remedies.

   a. Damages. The City reserves the right to recover any ascertainable actual damages incurred as a result of the failure of the Contractor to perform in accordance with the requirements of this Agreement, or for losses sustained by the city resultant from the Contractor's failure to perform in accordance with the requirements of this Agreement.

   b. Correction of Work. If, in the judgment of the City, work provided by the Contractor does not conform to the requirements of this Agreement, or if the work exhibits poor workmanship, the city reserves the right to require that the Contractor correct all deficiencies in the work to bring the work into conformance without additional cost to the City, and/or replace any personnel who fail to perform in accordance with the requirements of this Agreement. The City is the sole judge of non-conformance and the quality of workmanship.

6. Waiver of Liens. Prior to final payment of the Contract Sum, a final waiver of lien must be submitted by all suppliers, subcontractors, and/or Contractors who worked on the project that is the subject of this Agreement.

7. Warranties.
   a. Warranty of Title. Contractor warrants to the City that all goods and materials furnished

under the contract will be new unless otherwise specified and that Contractor possesses good, clear, and marketable title to said goods and there are no pending liens, claims, or encumbrances whatsoever against said goods. All work not conforming to these requirements, including substitutions not properly approved and authorized may be considered defective.

b. Warranty of Specifications. The Contractor warrants that all goods, materials, workmanship furnished, whether by the Contractor or its subcontractors and suppliers, will comply with the specifications, drawings and other descriptions supplied or adopted.

c. Warranty of Merchantability. The Contractor warrants all material and workmanship for a minimum of one (1) year from date of project completion and acceptance by the City. If within one (1) year after acceptance by the city, or within such larger period of time as may be described by law any of the work is found to be defective or not in accordance with the contract documents, the Contractor must after receipt of a written notice from the City to do so, promptly correct the work unless the City has previously given the Contractor a written acceptance of such condition.

8. Term. This Agreement will remain in effect for a period of (3) three years with (2) two, (1) one-year extensions from the Effective Date.

9. Effective date. The "Effective Date" of this Agreement shall be the date this Agreement has been executed by all parties.

10. Termination. This Agreement may be canceled by the City when:
   a. Sufficient funds are not available to continue its full and faithful performance to the Agreement.
   b. Sub-standard or non-performance of Agreement.
   c. The City wishes to terminate the Agreement at any time and for any reason, upon giving thirty (30) days prior written notice to the Contractor.

11. Fiscal Non-funding. If funds for the requested services described herein are not appropriated via the annual budget adoption process, the City reserves the right to cancel the Agreement immediately upon written notice to the Contractor.

12. Non-Exclusivity. Contractor acknowledges that the City may enter into agreements with other consultants or may have its own employees complete the work for services similar to the services that are subject to this Agreement.

13. Compensation. Upon Contractor's satisfactory full performance of the services or in accordance with the payment schedule provided in the attached proposal, City shall pay Contractor, as full consideration for services provided in this Agreement.

14. Insurance. To the extent that this Agreement requires Contractor to provide any services of any kind, Contractor and all of Contractor's subcontractors shall maintain public liability insurance in a combined single limit for bodily injury and property damage in the amount of not less than $1,000,000.00, satisfactory to the City Manager, naming the City as an additionally named insured and providing coverage up through and including the final performance of any services provided

herein. Contractor and all of Contractor's subcontractors shall maintain in full force and effect a policy of worker's compensation insurance for all of Contractor's employees in accordance with applicable state and federal law. Said insurance coverage shall include employer's liability with a single limit of $100,000.00 per accident or occurrence. Contractor shall present City with a certificate for all the foregoing insurance, at the time of executing this Agreement and at such other times requested by the City.

The Contractor waives all rights against the City, its consultants, separate contractors, if any, and any of its subcontractors, agents and employees, for any and all damages caused to the extent covered by insurance described herein and obtained pursuant to this Section or other property insurance applicable to the services and product provided under this Agreement. The City shall require of the Contractor, Contractor's consultants, separate contractors, if any, and the subcontractors, sub-subcontractors, agents and employees of any of them, by appropriate agreements, written where legally required for validity, similar waivers each in favor of other parties enumerated herein. The policies shall provide such waiver of subrogation by endorsement otherwise. A waiver of subrogation shall be effective as to a person or entity even though that person or entity would otherwise have a duty of indemnification, contractual or otherwise, did not pay the insurance premium directly or indirectly, and whether or not the person or entity had an insurable interest in the property damaged.

15. Indemnification. In consideration of the payment of ten dollars as part of the compensation described herein, such sum being specifically found by Contractor to be sufficient consideration for this indemnification, Contractor shall indemnify, defend and hold the City harmless for itself, its past/present/future elected and appointed officials, its employees, agents and assigns, from and against any and all losses, claims, damages, suits, actions, liability or demands, including attorneys' fees and costs of litigation through all appellate proceedings, arising from the performance or non-performance of this Agreement, whether caused in part by the City or not, and in connection with violations of copyrighted or trademarked materials used by Contractor, loss of life, bodily or personal injury, or property damage, including loss of use thereof, directly or indirectly caused by, resulting from, arising out of or occurring in connection with the operations of the Contractor or its officers, employees, agents, subcontractors, or independent Contractors, excepting only such loss of life, bodily or personal injury, or property damage solely attributable to the gross negligence or willful misconduct of the City or its elected or appointed officials and employees. In any and all claims against the City, or any of their agents or employees by any employee of the Contractor any subcontractor, anyone directly or indirectly employed by any of them or anyone for whose acts any of them may be liable, the indemnification obligation under this paragraph is not limited in any way by any limitation in this amount or type of damages compensation or benefits payable by or for the Contractor or any subcontractor under Workers' Compensation Acts, Disability Benefit Acts or other Employee Benefit Acts. Nothing contained herein is intended nor may it be construed, to waive City's rights and immunities under the common law or Section 768.28, Florida Statutes, as amended from time to time; nor will anything included herein be construed as consent to be sued by any third parties in any matter arising out of this Agreement. To the extent considered necessary by the Contract Administrator and the City Attorney, any sums due Contractor under this Agreement may be retained by the City until all of the City's claims subject to this indemnification obligation have been settled or otherwise resolved, and any amount withheld is not subject to payment of interest by the City. The above provisions

will survive the termination or expiration of this Agreement and will pertain to any occurrence during the term of this Agreement, even though the claim may be made after the termination or expiration hereof.

16. Discriminatory Vendor List. Contractor hereby acknowledges its continuous duty to disclose to the City if the Contractor or any of its affiliates, as defined by Section 287.134 (1)(a), Florida Statutes, are placed on the Discriminatory Vendor List. Pursuant to Section 287-134 (2)(a), Florida Statutes: "An entity or affiliate who has been placed on the discriminatory vendor list may not submit a bid, proposal, or reply on a contract to a public entity; may not submit a bid or proposal, or reply on a contract with a public entity for the construction or repair of a public building or public work; may not submit bids, proposals, or replies on leases of real property to a public entity; may not be awarded or perform work as a contractor, supplier, subcontractor, or consultant under a contract with any public entity; and may not transact business with any public entity."

17. Independent Contractor. This Agreement does not create an employee/employer relationship between the parties. It is the intent of the parties that the Contractor is an independent contractor under this Agreement and not the City's employee for any purposes, including but not limited to, the application of the Fair Labor Standards Act minimum wage and overtime payments, Federal Insurance Contribution Act, the Social Security Act, the Federal Unemployment Tax Act, the provisions of the Internal Revenue Code, the State Worker's Compensation Act, and the State Unemployment Insurance law. The Contractor will retain sole and absolute discretion in the judgment of the manner and means of carrying out Contractor's activities and responsibilities hereunder provided, further that administrative procedures applicable to services rendered under this Agreement will be those of Contractor, which policies of Contractor will not conflict with City, State, or United States policies, rules, or regulations relating to the use of Contractor's funds provided for herein. The contractor agrees that it is a separate and independent enterprise from the City, that it had full opportunity to find other business, that it has made its own investment in it business, and that it will utilize a high level of skill necessary to perform the work. This Agreement must not be construed as creating any joint employment relationship between the Contractor and the City and the City will not be liable for any obligation incurred by Contractor, including but not limited to unpaid minimum wages and/or overtime premiums.

18. Audit Rights. The City reserves the right to audit the records of the Contractor for the commodities and/or serves provided under the contract at any time during the performance and term of the contract and for a period of five (5) years after completion and acceptance by the City. If required by the City, the Contractor agrees to submit to an audit by an independent certified public accountant selected by the City. The Contractor must allow the City to inspect, examine and review the records of the Contractor in relation to this Agreement at any an all times during normal business hours during the term of the Agreement.

19. Exhibits. The following Exhibits shall be attached, incorporated, and made a part of this Agreement:
    a. Standard Contract Addendum (Exhibit "A")
    b. Request for Bid/Proposal (Exhibit "B")
    c. Vendor Bid/Proposal (Exhibit "C")

d. Conditional Federal/Grant-Funded Contract Addendum (Exhibit "D")

20. Notices. All notices sent pursuant to this Agreement shall be given in writing via certified mail or overnight courier and shall be delivered to the following addresses:

As to Contractor:
Free Agent Marine LLC
4807 Londonderry Drive
Tampa, FL 34647

As to City:
City Manager
City of St. Pete Beach
155 Corey Avenue
St. Pete Beach, FL 33706

With Copy To:
mike@freeagentmarine.com

With Copy To:
attorney@stpetebeach.org

21. Conflicts and Severability. To the extent that any terms in the attached proposal conflict with the terms of this Agreement, the terms of this Agreement shall control and supersede such conflicting terms in the attached proposal, to the extent of such conflict. If any section, part of section, paragraph, clause, phrase, or word of this Agreement is declared invalid, the remaining provisions of this Agreement shall not be affected.

22. Amendments. This document and exhibits embody the entire Agreement of the parties. There are no promises, terms, conditions, or representations binding on either party hereto, other than those contained herein; and this document shall supersede all previous communications, representations, and/or agreements between the parties hereto, whether written or oral. This Agreement shall not be modified by any oral statement, communication, Agreement, course of conduct, or by anything other than a writing signed by the parties. This Agreement may be amended or modified only in writing signed by all parties hereto.

23. Jurisdiction, Venue, Attorney Fees. This Agreement shall be governed and construed according to the laws of Florida, and venue for any action arising herefrom shall be in Pinellas County, Florida. The prevailing party in any action to enforce or interpret this Agreement shall be entitled to reasonable attorney's fees incurred through all appellate proceedings.

24. Assignment. This Agreement shall be binding upon the parties, their successors, assigns, and legal representatives. Contractor shall not assign or otherwise transfer any of the rights or duties under this Agreement, without the express written consent of the City.

25. Counterparts. This Agreement may be executed and delivered in any number of counterparts, each of which so executed and delivered shall be deemed to be an original and all of which shall constitute one and the same instrument. Facsimile, documents executed, scanned and transmitted electronically and electronic signatures shall be deemed original signatures for purposes of this Agreement and all matters related thereto, with such facsimile, scanned and electronic signatures having the same legal effect as original signatures.

26. Authority. Contractor hereby acknowledges that the person executing this Agreement on behalf of Contractor has the full authority to do so and to bind Contractor to the terms hereof.

IN WITNESS WHEREOF, the Parties have executed this Agreement on the day and year set forth below.

Under penalties of perjury, and pursuant to Sec. 92.525, Fla. Stat., Contractor declares that Contractor has read the Section 15 of the Standard Contract Addendum, Exhibit "A", and that the facts stated in it are true.

Free Agent Marine LLC:

Signature: 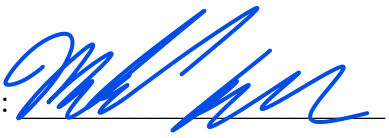

By: Michael Cardona

Its: Owner

Date: 05/22/2026

City of St. Pete Beach:

Signature: _____

By: Frances Robustelli

Its: City Manager

Date: _____

APPROVED AS TO FORM
AND LEGAL SUFFICIENCY:

_____
Ralf Brookes
City Attorney

ATTEST:

_____
Renee Rose
City Clerk

EXHIBIT "A"

Standard Contract Addendum

(Place Standard Form Addendum behind this page)

CITY OF ST. PETE BEACH, FLORIDA
STANDARD CONTRACT ADDENDUM

THIS STANDARD CONTRACT ADDENDUM is made and entered into this _____ day of _____, 2026, by and between the CITY OF ST. PETE BEACH, a Florida municipality, hereinafter referred to as the "City", and _____, hereinafter referred to as "Contractor", concerning that certain agreement dated the ____ day of _____, 2026 ("Agreement") and titled _____.

WITNESSETH:

WHEREAS, Section 119.0701, Fla. Stat., requires that certain public agency contracts must include certain statutorily required provisions concerning the contractor's compliance for Florida's Public Records Act; and

WHEREAS, Section 768.28, Fla. Stat., sets forth certain mandatory limitations on indemnification and liability for Florida public agencies; and

WHEREAS, Florida law requires that public agency contracts be subject to non-appropriation and thereby contingent upon appropriation during the public agency's statutorily mandated annual budget approval process; and

WHEREAS, Section 448.095, Fla. Stat., imposes certain obligations on public agencies with regard to the use of the E-Verify system by their contractors and subcontractors; and

WHEREAS, Section 287.133 and 287.135, Fla. Stat., provides restrictions on local governments contracting with companies that are on certain Scrutinized Companies lists or convicted vendor list; and

WHEREAS, additional terms required by Sections 282.3185(5) and (6) Fla. Stat. related to data management and Section 287.05701 Fla. Stat. related to social government and corporate activism are also added by virtue of this Addendum; and

WHEREAS, Section 286.101, Florida Statutes contains a list of "foreign countries of concern" including, the People's Republic of China, the Russian Federation, the Islamic Republic of Iran, the Democratic People's Republic of Korea, the Republic of Cuba, the Venezuelan regime of Nicolás Maduro, or the Syrian Arab Republic, including any agency of or any other entity under significant control of such "foreign country of concern". Any entity that does business with a state agency or political subdivision must disclose certain of their dealings with those "foreign countries of concern" to the Florida Department of Financial Services; and

WHEREAS, Section 787.06(13), Fla. Stat. provides that when a contract is executed, renewed, or extended between a nongovernmental entity and a governmental entity, the nongovernmental entity must provide the governmental entity with an affidavit signed by an

officer or a representative of the nongovernmental entity under penalty of perjury attesting that the nongovernmental entity does not use coercion for labor or services as defined in such statute;

NOW, THEREFORE, in consideration of the covenants set forth herein, the parties agree to this addendum as follows:

1. Amendment. This Addendum hereby amends and supplements the terms of the Agreement. In the event of a conflict between the terms of the Agreement and terms of the Addendum, the terms of the Addendum shall prevail.

2. Public Records Compliance. Contractor agrees that, to the extent that it may "act on behalf" of the City within the meaning of Section 119.0701(1)(a), Florida Statutes in providing its services under this Agreement, it shall:

(a) Keep and maintain public records required by the public agency to perform the service.

(b) Upon request from the public agency's custodian of public records, provide the public agency with a copy of the requested records or allow the records to be inspected or copied within a reasonable time at a cost that does not exceed the cost provided in this chapter or as otherwise provided by law.

(c) Ensure that public records that are exempt or confidential and exempt from public records disclosure requirements are not disclosed except as authorized by law for the duration of the contract term and following completion of the contract if the contractor does not transfer the records to the public agency.

(d) Upon completion of the contract, transfer, at no cost, to the public agency all public records in possession of the contractor or keep and maintain public records required by the public agency to perform the service. If the contractor transfers all public records to the public agency upon completion of the contract, the contractor shall destroy any duplicate public records that are exempt or confidential and exempt from public records disclosure requirements. If the contractor keeps and maintains public records upon completion of the contract, the contractor shall meet all applicable requirements for retaining public records. All records stored electronically must be provided to the public agency, upon request from the City's custodian of public records, in a format that is compatible with the information technology systems of the City.

(e) Pursuant to Section 119.0701(2)(a), Fla. Stat., **IF THE CONTRACTOR HAS QUESTIONS REGARDING THE APPLICATION OF CHAPTER 119, FLORIDA STATUTES, TO THE CONTRACTOR'S DUTY TO PROVIDE PUBLIC RECORDS RELATING TO THIS AGREEMENT, CONTACT THE CUSTODIAN OF PUBLIC RECORDS AT:**

Renee Rose
City Clerk/Public Records Custodian
cityclerk@stpetebeach.org

Phone: 727-363-9220
155 Corey Avenue
St. Pete Beach, FL 33706
Fax: 727-541-8040

3. Public Records Compliance Indemnification. Contractor agrees to indemnify and hold the City harmless against any and all claims, damage awards, and causes of action arising from the contractor's failure to comply with the public records disclosure requirements of Section 119.07(1), Florida Statutes, or by contractor's failure to maintain public records that are exempt or confidential and exempt from the public records disclosure requirements, including, but not limited to, any third party claims or awards for attorneys' fees and costs arising therefrom. Contractor authorizes the public agency to seek declaratory, injunctive, or other appropriate relief against Contractor in Pinellas County Circuit Court on an expedited basis to enforce the requirements of this section.

4. Compliance/Consistency with Section 768.28, Fla. Stat. Any indemnification or agreement to defend or hold harmless by City specified in the Agreement shall not be construed as a waiver of City's sovereign immunity, and shall be limited to such indemnification and liability limits consistent with the requirements of Section 768.28, Fla. Stat. and subject to the procedural requirements set forth therein. Any other purported indemnification by City in the Agreement in derogation hereof shall be void and of no force or effect.

5. Non-appropriation. City's performance and obligation to pay under this Agreement is contingent upon an appropriation during the City's annual budget approval process. If funds are not appropriated for a fiscal year, then the Contractor shall be notified as soon as is practical by memorandum from the City Manager or designee that funds have not been appropriated for continuation of the Agreement, and the Agreement shall expire at the end of the fiscal year for which funding has been appropriated. The termination of the Agreement at fiscal year end shall be without penalty or expense to the City subject to the City paying all invoices for services rendered during the period the Agreement was funded by appropriations.

6. E-Verify Compliance. By entering into this Agreement, the Contractor is obligated to comply with the provisions of Section 448.095, Fla. Stat. "Employment Eligibility," as amended from time to time. This includes but is not limited to register with and use the E-Verify System to verify the work authorization status of all newly hired employees, and requiring all subcontractors to provide an affidavit to Contractor attesting that the subcontractor does not employ, contract with, or subcontract with, an unauthorized alien. Contractor agrees to maintain a copy of such affidavit for the duration of this Agreement. Failure to comply with this paragraph will result in the termination of this Agreement as provided in Section 448.095, Fla. Stat., as amended and Contractor will not be awarded a public contract for at least one (1) year after the date on which the Agreement was terminated. Contractor will also be liable for any additional costs to the City as a result of the termination of this Agreement in accordance with this paragraph. Contractor affirmatively states, under penalty of perjury, that in accordance with Section 448.095, Fla. Stat., Contractor is registered with and uses the E-Verify system to verify the work authorization status of all newly hired employees, that in accordance with such statute, Contractor requires from each of its subcontractors an affidavit stating that the subcontractor does not employ, contract with, or

subcontract with an unauthorized alien, and that Contractor is otherwise in compliance with Sections 448.09 and 448.095, Fla. Stat.

7. Compliance/Consistency with Scrutinized Companies Provisions of Florida Statutes. Section 287.135(2)(a), Fla. Stat., prohibits a company from bidding on, submitting a proposal for, or entering into or renewing a contract for goods or services of any amount if, at the time of contracting or renewal, the company is on the Scrutinized Companies that Boycott Israel List, created pursuant to Section 215.4725, Fla. Stat., or is engaged in a boycott of Israel. Section 287.135(2)(b), Fla. Stat., further prohibits a company from bidding on, submitting a proposal for, or entering into or renewing a contract for goods or services over one million dollars ($1,000,000) if, at the time of contracting or renewal, the company is on either the Scrutinized Companies with Activities in Sudan List or the Scrutinized Companies with Activities in the Iran Petroleum Energy Sector List, both created pursuant to section 215.473, Fla. Stat., or the company is engaged in business operations in Cuba or Syria. Contractor hereby certifies that Contractor is not listed on any of the following: (i) the Scrutinized Companies that Boycott Israel List, (ii) Scrutinized Companies with Activities in Sudan List, or (iii) the Scrutinized Companies with Activities in the Iran Petroleum Energy Sector List. Contractor further hereby certifies that Contractor is not engaged in a boycott of Israel or engaged in business operations in Cuba or Syria. Contractor understands that pursuant to section 287.135, Fla. Stat., the submission of a false certification may subject Contractor to civil penalties, attorney's fees, and/or costs. Contractor further understands that any contract with City for goods or services of any amount may be terminated at the option of City if Contractor (i) is found to have submitted a false certification, (ii) has been placed on the Scrutinized Companies that Boycott Israel List, or (iii) is engaged in a boycott of Israel. And, in addition to the foregoing, if the amount of the contract is one million dollars ($1,000,000) or more, the contract may be terminated at the option of City if the company is found to have submitted a false certification, has been placed on the Scrutinized Companies with Activities in Sudan List or the Scrutinized Companies with Activities in the Iran Petroleum Energy Sector List, or has been engaged in business operations in Cuba or Syria.

8. Disclosure Requirements for "Foreign Countries of Concern". CONTRACTOR shall comply with the disclosure requirements set forth is Section 286.101 (3) (a), Fla. Stat., which requires "Any entity that applies to a state agency or political subdivision for a grant or proposes having a contract value of $100,000 or more shall disclose to the state agency or political subdivision any current or prior interest of, any contract with, or any grant or gift received from a "foreign country of concern" if such interest, contract, grant or gift received from a "foreign country of concern" if such interest, contract, grant or gift has a value of $50,000 or more and such interest existed at any time or such contract, grant or gift was received or in force at any time during the previous five (5) years. Such disclosure shall contain the name and mailing address of the disclosing entity, the amount of the gift or the value of the interest disclosed, the applicable "foreign country of concern" and, if applicable the date of termination of the contract or interest, the date of receipt of the grant or gift and the name of the agent or controlled entity that is the source or interest holder. Within one (1) year before applying for any grant or proposing any contract, such entity must provide a copy of such disclosure to the Department of Financial Services". Pursuant to Section 286.101(7), Fla. Stat.: "In addition to any fine assessed under [section 286.101(7)(a), F.S.], a final order determining a third or subsequent violation by an entity other than a state agency or political subdivision shall automatically disqualify the entity from

eligibility for any grant or contract funded by a state agency or any political subdivision until such ineligibility is lifted by the Administration Commission for good cause."

9. Venue and Jurisdiction. Notwithstanding any of other provision to the contrary, this Agreement and the parties' actions under this Agreement shall be governed by and construed under the laws of the State of Florida, without reference to conflict of law principles. As a material condition of this Agreement, each Party hereby irrevocably and unconditionally: i) consents to submit and does submit to the jurisdiction of the Circuit Court in and for Pinellas County, Florida for any actions, suits or proceedings arising out of or relating to this Agreement. Both parties waive any right to file an action, suit or proceeding in Federal Court or remove any action, suit or proceeding to Federal Court.

10. Attorneys' Fees and Costs. Notwithstanding any of other provision to the contrary, if litigation ensues regarding this Agreement, each party hereto shall bear its own attorneys' fee and costs.

11. Public Entities Crime or Convicted Vendor List. Contractor agrees and assumes a continuous duty to disclose to the City if the Contractor or any of its affiliates as defined by Section 287.133(1)(a), Florida Statutes are placed on the Convicted Vendor List or the Antitrust Violator Vendor List maintained by the Florida Department of Management Services.

12. Data Management; Notice of Breach. Contractor shall cooperate with the City and provide timely incident reporting, response activities/fact gathering, public and agency notification, severity level assessment, after-action reports, etc., which the City must report in accordance with Sections 282.3185(5) & (6), Florida Statutes in the event of a data breach.

13. Environmental and Social Government and Corporate Activism. The City has not given preference or requested documentation from the Contractor based on Contractor's social, political or ideological interest. Contractor agrees to similarly not request documentation or give preference to any subcontractor based on the subcontractor's social, political or ideological interests.

14. Taxes. The City shall not be liable for any taxes and assessments imposed by a federal, state or local governmental agency to the extent that the City is exempt from same by Florida law, including but not limited to any sales or use tax.

15. No coercion for labor or services. The Contractor swears under penalty of perjury that the Contractor does not use coercion for labor or services as defined as follows:

"Coercion" means:

1. Using or threatening to use physical force against any person;
2. Restraining, isolating, or confining or threatening to restrain, isolate, or confine any person without lawful authority and against her or his will;
3. Using lending or other credit methods to establish a debt by any person when labor or services are pledged as a security for the debt, if the value of the labor or services as reasonably assessed is not applied toward the liquidation of the debt, the length and nature of the labor or services are not respectively limited and defined;

4. Destroying, concealing, removing, confiscating, withholding, or possessing any actual or purported passport, visa, or other immigration document, or any other actual or purported government identification document, of any person;

5. Causing or threatening to cause financial harm to any person;

6. Enticing or luring any person by fraud or deceit; or

7. Providing a controlled substance as outlined in Schedule I or Schedule II of Sec. 893.03, Fla. Stat. to any person for the purpose of exploitation of that person.

16. Force Majeure. The City reserves the right to suspend, modify or terminate this contract in the event of an act of god or act of man beyond the control of the parties, including but not limited to a hurricane, tropical storm, tornado, or other destructive weather event, flooding, pandemic, plague, war, armed conflict, domestic or foreign terrorism, riot, labor condition, state or federal governmental action, and catastrophic Internet disturbance, making performance inadvisable, economically impracticable, illegal, or impossible.

17. Additional Terms. Notwithstanding any of other provision to the contrary, the parties agree as follows:

A. None.

IN WITNESS WHEREOF, the parties hereto have executed and delivered this instrument on the days and year indicated below and the signatories below to bind the parties set forth herein.

Under penalties of perjury, and pursuant to Sec. 92.525, Fla. Stat., Contractor declares that Contractor has read the foregoing Section 15 above and that the facts stated in it are true.

Contractor:

_____

Print Name: Michael Cardona

Title: Owner

Company: Free Agent Marine

ATTEST:

_____
Renee Rose, City Clerk

City of St. Pete Beach:

_____
Frances Robustelli, City Manager

EXHIBIT "B"

Request for Bid/Proposal

(Place Request for Bid/Proposal behind this page)

155 Corey Avenue
St. Pete Beach, FL 33706-1839
www.stpetebeach.org

ADDENDUM 2

Commercial Diving Services

Issued 3/27/2026

*Sealed bids must be received by **9:00 AM on 04/08/2026** electronically via Bonfire. Bids received after the deadline will not be accepted. They will be publicly opened and read at **9:30 AM on 04/08/2026**. All bidders are invited to attend this bid Opening.*

Addendum 2 includes:

Questions and Answers

Questions and Answers:

1. Can you advise company licensing requirements - specifically that a Licensed Specialty Marine Contractor registered through the Florida DBPR is required for Award of this contract? Not required.

2. ADCI Consensus Standards Edition 6.5 for commercial dive operations is the safe standard adopted by the USCG and many agencies for underwater work. Will this standard be enforced for the services outlined in this solicitation? All diving operations shall comply with OSHA Commercial Diving Operations (29 CFR 1910 Subpart T). Diving operations shall also conform to ADCI Consensus Standards (latest edition) or an equivalent nationally recognized commercial diving standard, such as USACE EM 385-1-1, where applicable.



155 Corey Avenue
St. Pete Beach, FL 33706-1839
www.stpetebeach.org

ADDENDUM 1

Commercial Diving Services

Issued 3/23/2026

*Sealed bids must be received by **9:00 AM on 04/08/2026** electronically via Bonfire. Bids received after the deadline will not be accepted. They will be publicly opened and read at **9:30 AM on 04/08/2026**. All bidders are invited to attend this bid Opening.*

Addendum 1 includes:

Pre-bid Minutes
Questions and Answers

Optional - Pre-Bid Meeting Minutes
RFB: Commercial Diving Services
March 18, 2026
9:30 AM

Staff Members Present:
Sara Spain, Procurement Manager
John Taylor, Assistant Finance Director
Camden Mills, Public Services Director
Brian Peckins, Assistant Public Services Director
Dejan Milosevic, Project Manager
Michael Weaver, Infrastructure Operations Manager
Brian Gelock, Public Services
Kenneth Kosbab, Public Services
Ariana Wilson-Romo, Exec. Assistant City Clerk's Office

Others Present:

Name	***Company***	***Contact***
Helize Vivier	Triton Commercial Diving LLC	Helize.vivier@tcddive.com
Nathan Balkit	AC Plus Marine	projects@acplusmarine.com
Troy Caras	Isla Maritime	tcaras@islamaritime.com
Kyle Adkins	Ballard Marine Construction	Kyle.adkins@ballardmc.com
Imre Budinszki	Dive Tech International	Dive-tech@att.net
Levi Osborn	Ballard Marine Construction	Levi.osborn@ballardmc.com
Alan Christian	EnviroScience Inc.	achristian@enviroscienceinc.com
Zach Rogers	In Depth Inc.	zach@indepthservicesinc.com
Aileen Caras	Isla Maritime	acaras@islamaritime.com
Paul Overby	Dive Tech International	jpoverby@dive-tech.com
Eric Shelley	Isla Maritime	eshelley@islamaritime.com
Miles Upcavage	Did not provide	Did not provide

The meeting was called to order at 9:33 AM.

All attendees were present via Teams.

Ms. Spain briefly reviewed important dates and times which are as follows:

- Receipt of questions due 3/25 at 10AM
- Bids due 4/8 by 9AM
- Bid opening 4/8 at 9:30AM

She requested that any questions be submitted in writing to purchasing@stpetebeach.org. Questions will be answered via an addendum that will be posted to the City website and Bonfire.

Public Services Director Camden Mills summarized that this project will be for a maintenance contract managed by the City's operations team, with a goal to have on-call service for commercial diving.

There being no questions, the meeting was adjourned at 9:38 AM.

Questions and Answers:

1. Does this project require that the bidder hold a FL State General Contractor License? NO

2. Please provide the direct link for bid submission.
https://stpetebeach.bonfirehub.com/portal/?tab=openOpportunities

3. Can you please provide exact locations of the areas where the scheduled work is to be completed. Please see attached maps.

4. Can you please provide engineered drawings and associated structures where the dive team will work on the grates, valves, pipelines, etc… Please see link below.

5. Can the City clarify whether a Florida Certified or Registered Contractor's License is required for this contract, specifically for repair or replacement of tidal check valves, or if this work is considered maintenance under this RFB? Not required. Work is considered maintenance.

6. Can the City confirm that hydraulic dredging under this contract is limited to maintenance removal of sediment and does not include excavation or alteration of original design grade requiring contractor licensure? Yes, dredging under this contract is limited to maintenance removal of sediment.

7. Can the City provide clarification on how many locations require access by boat or barge versus land-based access, and whether work will typically be grouped to minimize mobilizations? Please see maps linked below; Majority of locations are accessible by land. Work will be grouped to minimize mobilizations.

8. Can the City confirm whether remotely operated vehicles (ROV) or sonar-based inspection methods may be utilized as a supplement to diver inspections, where appropriate, to enhance safety, efficiency, and documentation quality? Yes, that's acceptable.

9. Can the City provide a detailed asset list or map identifying the locations, approximate depths, pipe diameters, and typical conditions of the tide check valves, manatee grates, and outfalls included in this contract? Additionally, are any prior inspection reports or videos available for reference? See attached.

Check Valve Asbuilts.zip

TCV Maint - Bid Specs.xlsx

ST. PETE BEACH

KEY SHEET

Legend

Page Number

St. Pete Beach
The Sunset Capital of Florida

N

0 1,000 2,000 3,000 4,000 Feet

1 2 3 4 5 6 7 8 9 10 11 12 13 14 15 16 17 18 19 20 21

Kimley»Horn

ST. PETE BEACH STORM SYSTEM

Service Area 5 - Page 1

APRIL 2023

- Clean Out
- Control Valve
- Discharge Point
- Fitting
- Inlet
- Manhole
- Pump Station
- Gravity Main
- Abandoned Pipe

St. Pete Beach
The Sunset Capital of Florida

N

0 55 110 220 330 440
Feet

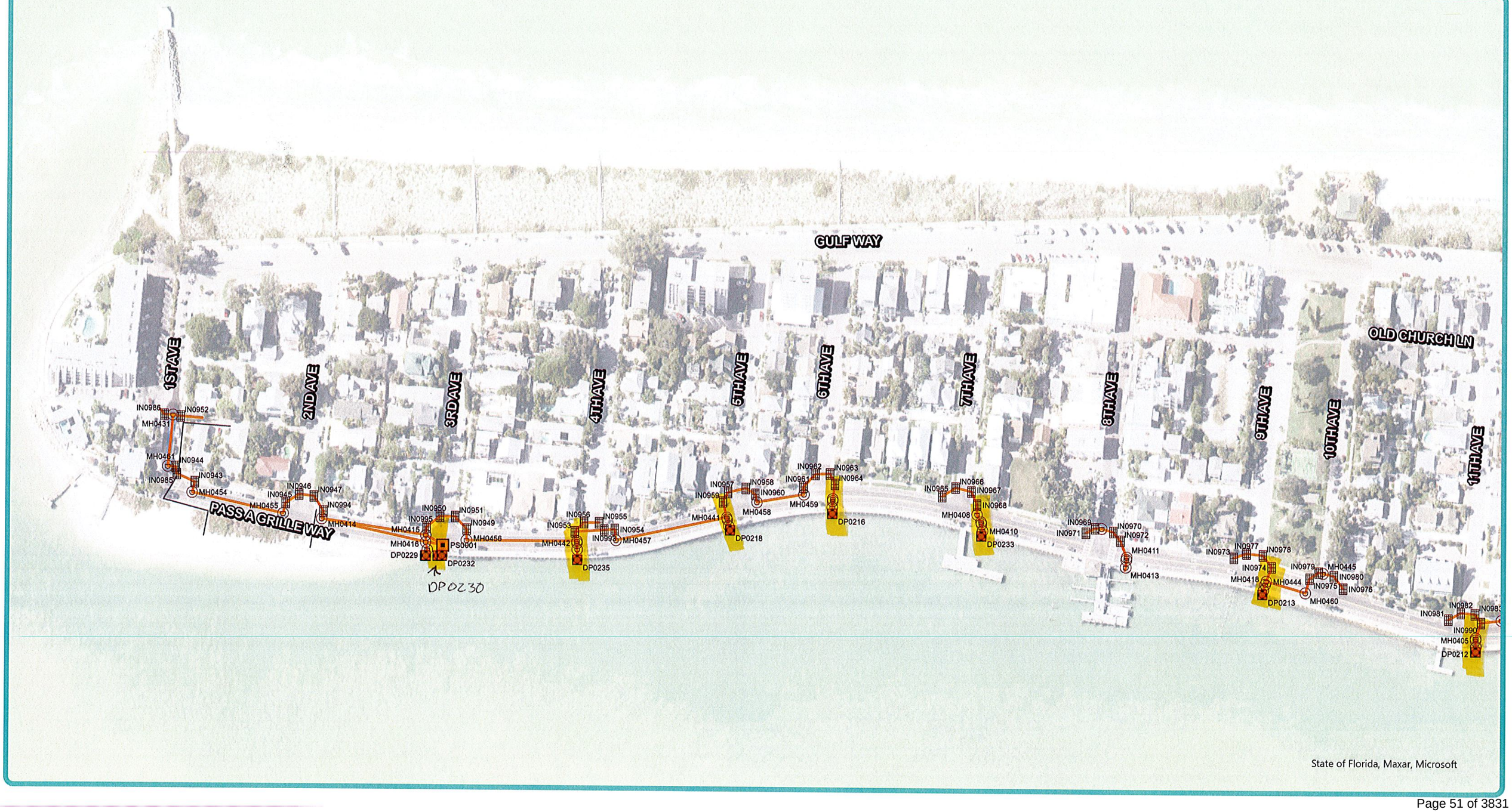

ST. PETE BEACH STORM SYSTEM

Service Area 4 - Page 2

APRIL 2023

- Clean Out
- Control Valve
- Discharge Point
- Fitting
- Inlet
- Manhole
- Pump Station
- Gravity Main
- Abandoned Pipe

St. Pete Beach
The Sunset Capital of Florida

N

0 55 110 220 330 440
Feet



ST. PETE BEACH STORM SYSTEM

Service Area 6 - Page 3

APRIL 2023

- Clean Out
- Control Valve
- Discharge Point
- Fitting
- Inlet
- Manhole
- Pump Station
- Gravity Main
- Abandoned Pipe

St. Pete Beach
The Sunset Capital of Florida

N

0 110 220 440 660 880
Feet



ST. PETE BEACH STORM SYSTEM

Service Area 3 - Page 4

APRIL 2023

- Clean Out
- Control Valve
- Discharge Point
- Fitting
- Inlet
- Manhole
- Pump Station
- Gravity Main
- Abandoned Pipe

St. Pete Beach
The Sunset Capital of Florida

N

0 55 110 220 330 440
Feet

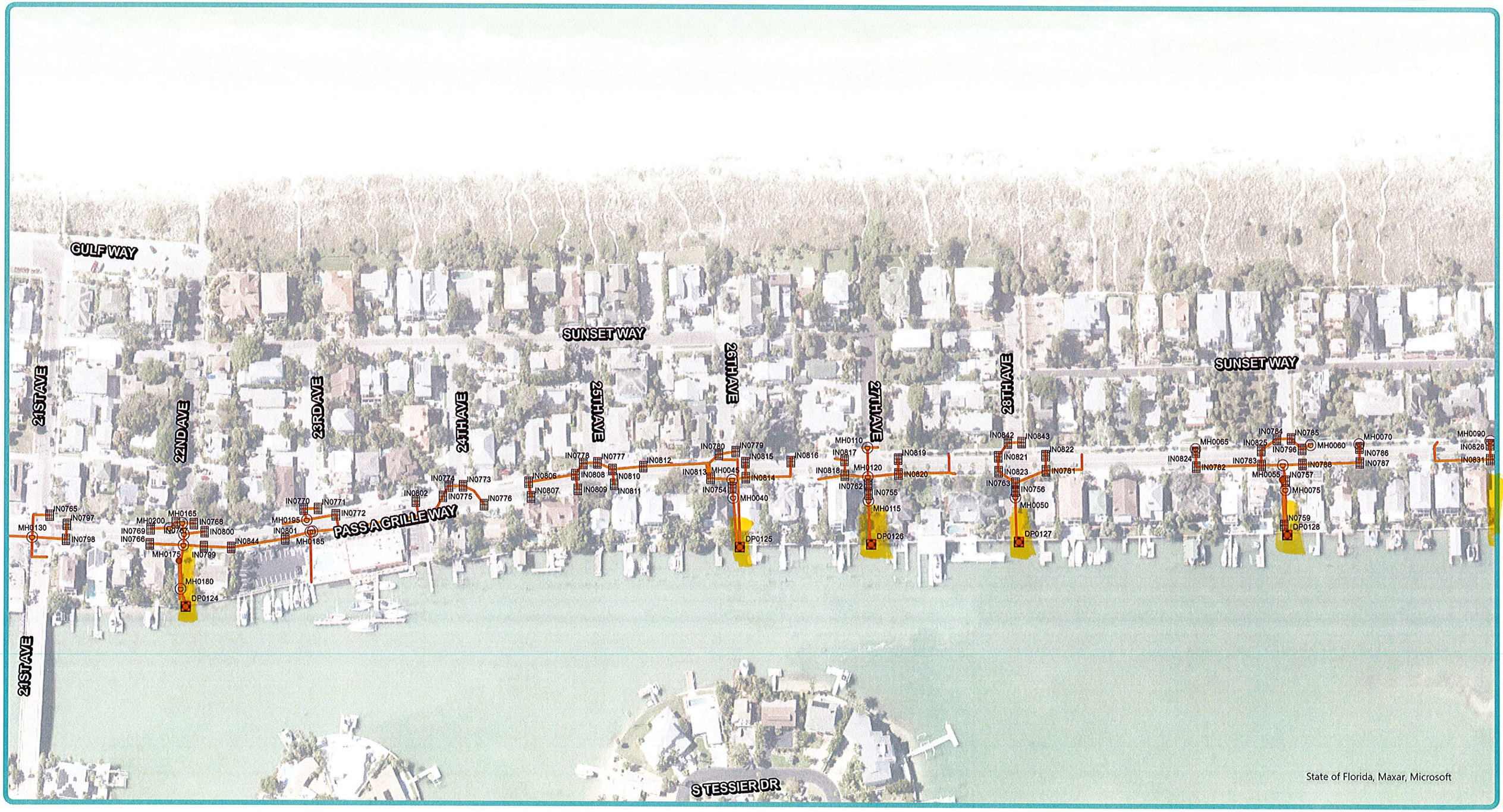

ST. PETE BEACH STORM SYSTEM

Service Area 3 - Page 5

APRIL 2023

- Clean Out
- Control Valve
- Discharge Point
- Fitting
- Inlet
- Manhole
- Pump Station
- Gravity Main
- Abandoned Pipe

St. Pete Beach
The Sunset Capital of Florida

N

0 110 220 440 660 880
Feet



ST. PETE BEACH STORM SYSTEM

Service Area 17 - Page 6

APRIL 2023

- Clean Out
- Control Valve
- Discharge Point
- Fitting
- Inlet
- Manhole
- Pump Station
- Gravity Main
- Abandoned Pipe

St. Pete Beach
The Sunset Capital of Florida

N

0 137.5275 550 825 1,100
Feet



ST. PETE BEACH STORM SYSTEM

Service Area 8 - Page 7

APRIL 2023

- Clean Out
- Control Valve
- Discharge Point
- Fitting
- Inlet
- Manhole
- Pump Station
- Gravity Main
- Abandoned Pipe

St. Pete Beach
The Sunset Capital of Florida

N

0 80 160 320 480 640
Feet



ST. PETE BEACH STORM SYSTEM

Service Area 7 - Page 8

APRIL 2023

- Clean Out
- Control Valve
- Discharge Point
- Fitting
- Inlet
- Manhole
- Pump Station
- Gravity Main
- Abandoned Pipe

St. Pete Beach
The Sunset Capital of Florida

N

0 110 220 440 660 880
Feet

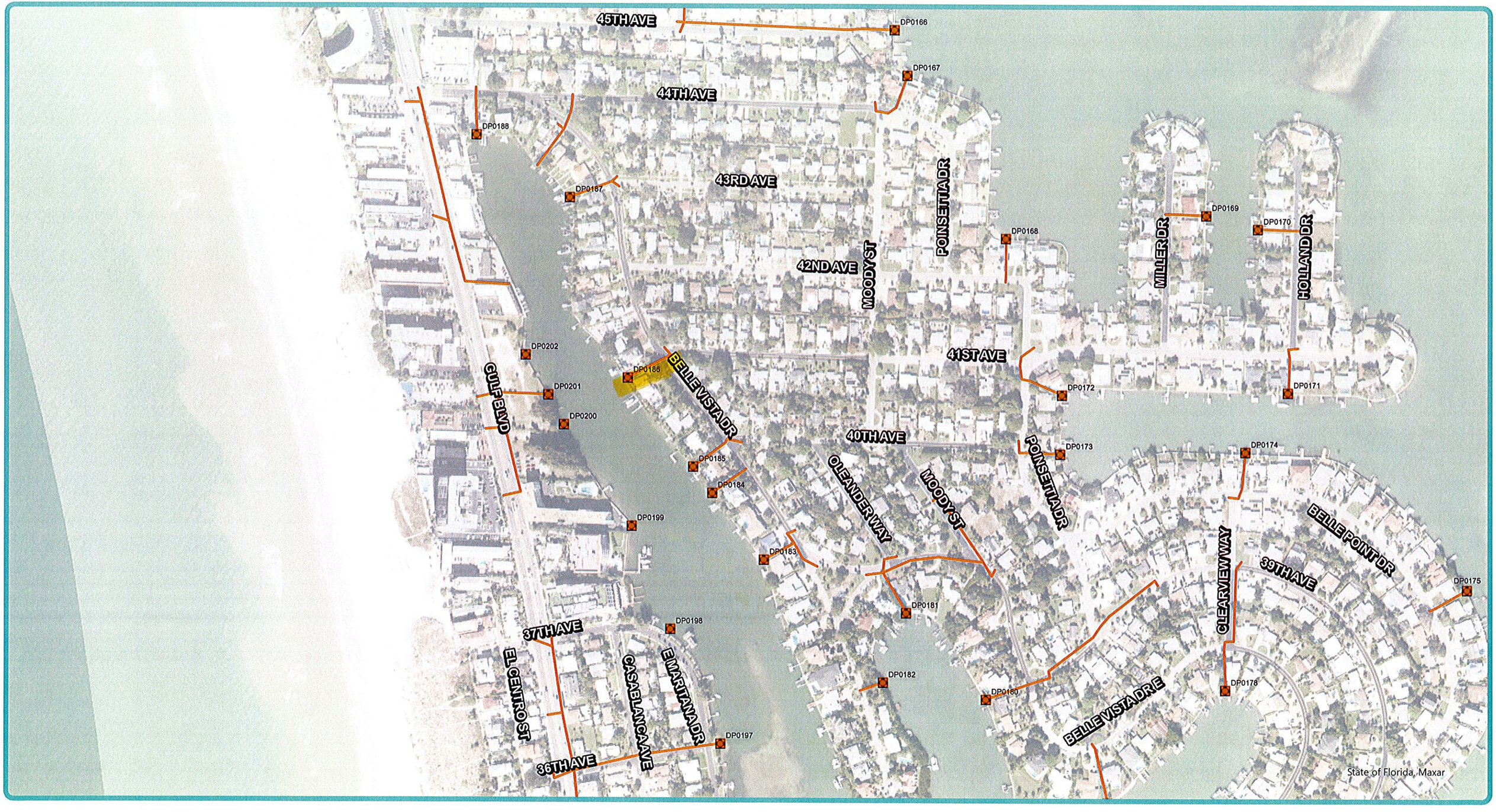

ST. PETE BEACH STORM SYSTEM

Service Area 16 - Page 9

APRIL 2023

- Clean Out
- Control Valve
- Discharge Point
- Fitting
- Inlet
- Manhole
- Pump Station
- Gravity Main
- Abandoned Pipe

St. Pete Beach
The Sunset Capital of Florida

N

0 80 160 320 480 640
Feet



ST. PETE BEACH STORM SYSTEM

Service Area 9 - Page 10

APRIL 2023

- Clean Out
- Control Valve
- Discharge Point
- Fitting
- Inlet
- Manhole
- Pump Station
- Gravity Main
- Abandoned Pipe

St. Pete Beach
The Sunset Capital of Florida

N

0 55 110 220 330 440
Feet



ST. PETE BEACH STORM SYSTEM

Service Area 2 - Page 11

APRIL 2023

- Clean Out
- Control Valve
- Discharge Point
- Fitting
- Inlet
- Manhole
- Pump Station
- Gravity Main
- Abandoned Pipe

St. Pete Beach
The Sunset Capital of Florida

N

0 80 160 320 480 640
Feet

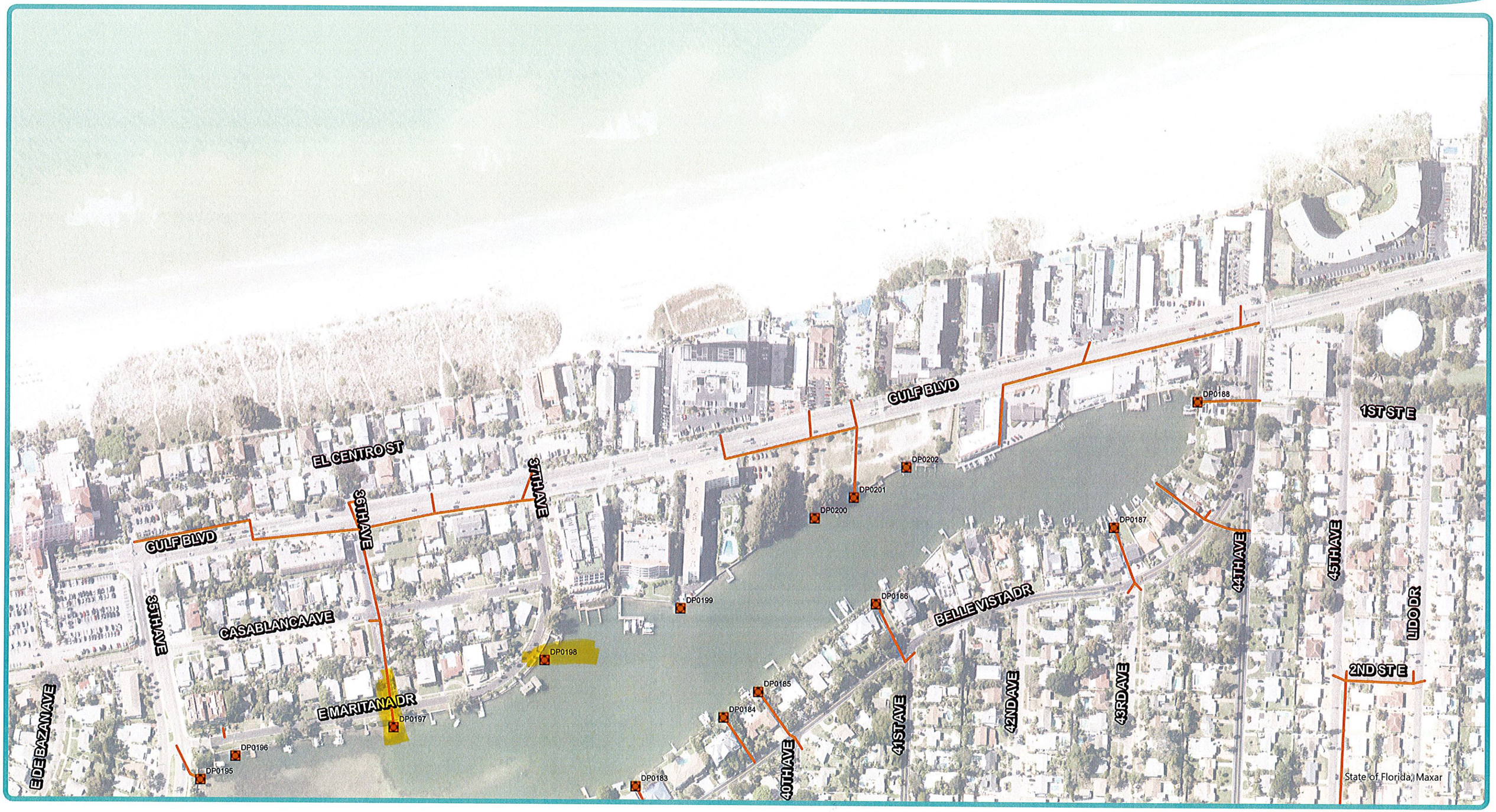

ST. PETE BEACH STORM SYSTEM

Service Area 14 - Page 17

APRIL 2023

Clean Out
Control Valve
Discharge Point
Fitting
Inlet
Manhole
Pump Station
Gravity Main
Abandoned Pipe

St. Pete Beach
The Sunset Capital of Florida

N

0 137.5275 550 825 1,100 Feet





City of St Pete Beach
Request for Bid

Commercial Diving Services

Bids due on or before
04/08/2026 at 9:00 AM
EST(Deadline) Electronically Via Bonfire Only

Table of Contents

I. CONTRACTOR'S BID SUBMITTAL 3
II. BID FORM 4
III. GENERAL CONTRACT TERMS 5
IV. REFERENCES & MINIMUM QUALIFICATIONS 25
V. PUBLIC ENTITY CRIMINAL AFFIDAVIT 26
VI. NON-COLLUSION AFFADAVIT 28
VII. SPECIFICATIONS 29

Event	Date	Time
Publication of Bid	03/11/2026	8:00 AM
Pre-Bid Meeting	03/18/2026	9:30 AM
Deadline for Question Submission	03/25/2026	10:00 AM
Bid Receiving Deadline	04/08/2026	9:00 AM
Bid Opening	04/08/2026	9:30 AM

I. CONTRACTOR'S BID SUBMITTAL

The company that is submitting a bid declares that it has extensive experience in **Commercial Diving Services.**

The undersigned, as Bidder, hereby declares that the only person or persons interested in the Bid as principal or principals are named herein, and that no person other than herein mentioned has any interest in the Bid or in the Agreement to be entered into; that this Bid or Agreement is made without connection with any other person, company, or parties making a Bid; and that it is in all respects fair and in good faith without collusion or fraud.

The Bidder further declares that they have examined the site of the work and informed themselves fully in regard to all conditions pertaining to the place where the work is to be done; that they have examined the Plans and Specifications for the work and Contract Documents relative thereto, and have read all special provisions furnished prior to the opening of bids; and that they have satisfied themselves relative to the materials to be supplied and work to be performed.

The Bidder proposes and agrees, if the Bid is accepted, to contract with the City of St. Pete Beach, Florida, in the form of an Agreement specified for **"Commercial Diving Services"** in St. Pete Beach, Florida, in full and complete accordance with the shown, noted, described, and reasonably intended requirements of the Plans, Specifications, and Contract Documents, to the full and entire satisfaction of the City of St. Pete Beach, Florida.

The successful bidder shall be required to utilize the template Agreement in this Request for Bids (RFB) and any questions regarding the Agreement must be addressed during the RFB process before submittal. The City reserves the right to respond or not respond to questions in the form of an addendum.

The Bidder proposes to furnish all materials, equipment, labor, and perform the work submitted in their bid schedule for the City of St. Pete Beach **" Commercial Diving Services".**

COMPANY: _____ DATE: _____

ADDRESS: _____ PHONE: _____

BIDDER: _____ NAME: _____
(SIGNATURE) *(PRINT NAME & TITLE)*

STATE OF FLORIDA
COUNTY OF _____

The foregoing instrument was sworn to (or affirmed), subscribed, and acknowledged before me **by means of ☐ physical presence or ☐ online notarization**, this _____ day of _____, 2026, by _____, who is personally known to me or has produced _____ as identification.

(SEAL)

_____
Notary Public – State of Florida

_____
(Print, Type, Stamp, or Commissioned Name of Notary Public)

SUBMIT BID TO:

Electronically via Bonfire Only

II. Bid Form

Pay Item	Description	Quantity	Unit	Unit Cost	Total Cost
Diver Team Labor					
	Three (3) Man Dive Team, Scheduled	40	Hour		$ -
	Three (3) Man Dive Team, Overtime	20	Hour		$ -
	Three (3) Man Dive Team, Unscheduled	40	Hour		$ -
	Additional Diver	8	Hour		$ -
	Additional Diver, Overtime	8	Hour		$ -
	Additional Diver, Unscheduled	8	Hour		$ -
	Written & Photo/Video Reports or Specialized Paperwork	10	Hour		$ -
	Emergency Call-Out Fee	1	Each		$ -
				Subtotal	**$ -**
Mobilization Rate, Per Occurrence					
	Mobilization Fee	5	Each		$ -
	Demobilization Fee	5	Each		$ -
				Subtotal	**$ -**
Equipment					
	Work Boat / Barge	20	Day		$ -
	Hydraulic Unit	20	Day		$ -
	4-inch Hydraulic Submersible Pump	20	Day		$ -
	Jet Pump	20	Day		$ -
	4,000 PSI Water Blaster	20	Day		$ -
	Digital Underwater Camera	20	Day		$ -
	Underwater Video with Digital Capture	20	Day		$ -
	Fuel Charge	20	Day		$ -
	Small Pneumatic Tool	20	Day		$ -
	Shallow Water Dive Package	20	Day		$ -
	Additional Equipment (Cost plus 15%)	1	LS		
				Subtotal	**$ -**
Materials					
	Additional Materials (Cost plus 15%)	1	LS		
				TOTAL	$ -

** Scheduled labor is six (6) hour minimum onsite. Overtime is after eight (8) hours including nights, weekends, and holidays.*

III. GENERAL CONTRACT TERMS

REQUEST FOR BID

The City of St. Pete Beach is submitting this RFB for bids on the Commercial Diving Services.

LOCATIONS

The City of St. Pete Beach is soliciting bids from qualified Commercial Diving Services for the City.

BID SUBMITTALS

Bid documents must include a signed/notarized Contractor's Bid Submittal, Bid Form, References, Contractor's license and insurance certificates, and Public Entity Criminal Affidavit. The Contractor shall submit one electronic bid via Bonfire.

BIDDER INFORMATION

The City is not responsible for any Addendums or other supplementary information that is not received due to non-submittal of the aforementioned information. Please refer back to the city website (http:// www.stpetebeach.org/news-and-links/city-projects.html) for additional project information as it becomes available. The City reserves the right to decide whether to answer addendums or not. The City is not required to provide any additional information.

PRE-BID MEETING

An optional pre-bid meeting will be held on **03/18/2026 at 9:30 AM EST** via Microsoft Teams Video conference/Teleconference. Please contact the City's Procurement Manager (purchasing@stpetebeach.org) for a meeting invitation and Microsoft Teams Meeting instructions.

WRITTEN REQUESTS FOR INTERPRETATIONS/CLARIFICATIONS

No oral interpretations will be made to any firms as to the meaning of the scope of work or any other contract documents included in this **RFB.** All questions pertaining to the terms and conditions or scope of work of this Request for Bid **(RFB)** must be sent in writing only via email to the City Procurement Manager (purchasing@stpetebeach.org) and shall be received no later than **10:00 EST on 03/25/2026**. Responses to questions may be handled as an Addendum if the response would provide clarification to the requirements of the **RFB**. All such Addenda shall become a part of the contract documents. The City will not be responsible for any other explanation or interpretation of the proposed **RFB** made or given prior to the award of the contract. The City will not respond to questions received after the specified deadline. The City reserves the right to respond to any and all questions but is not required to do so.

BID PACKAGES

Sealed bids will be accepted by the City until **04/08/2026** at **9:00 AM** EST (Deadline). No bids shall be accepted by the City after this deadline – NO EXCEPTIONS. Bid Packages must be electronically submitted via Bonfire Clearly marked as: "**Commercial Dive Services**." If a link is needed for either site, please contact the Procurement Manager (purchasing@stpetebeach.org.) All Bidders are invited to attend this bid opening.

CONTACT INFORMATION

Sara Spain – Procurement Manager
Mailing Address - 155 Corey Avenue, St. Pete Beach, Florida 33706
E-mail - purchasing@stpetebeach.org

SCOPE OF WORK

The City of St. Pete Beach is seeking a qualified full service commercial diving Contractor with experience in a wide range of applications. The Contractor shall provide a qualified dive team, and all related diving equipment required to assist the City of St. Pete Beach with the cleaning, inspection, repair and maintenance of tide check valves, stormwater outfalls, manatee grates, subaqueous pipelines, piers, piles, and bulkheads.

The City of St. Pete Beach has 35 tide check valves, and 25 manatee grates installed at stormwater outfalls throughout the City. Services shall include:

- Debris Removal from Valve, Pipe, Endwalls, and Pit
- Marine Growth Removal from Valve, Pipe, Endwalls, and Pit
- Maintenance of Manatee Grates, when present
- Written and Video Reports of condition per cycle
- Repair and Replacement of in-line and outfall-end type Tidal Check Valves
- Hydraulic Dredging

Services must comply with relevant standards and regulations, including OSHA diving regulations and any applicable environmental guidelines.

CONTRACTOR TO FURNISH

- A Qualified Dive Team
- All Related Diving Equipment
- Underwater Video with Digital Capture
- Shallow Water Dive Package
- Small Pneumatic Tool
- Work Boat / Barge
- Hydraulic Unit
- 4-inch Hydraulic Submersible Pump
- Jet Pump
- 4000 PSI Water Blaster
- Digital Camera

THE CITY OF ST. PETE BEACH TO FURNISH

- A Representative to Coordinate Activities
- A Representative to View Video Real Time and Direct the Crew
- Access to Work Site
- Permits (If required)
- Assist with Lock-Out Tag-Out procedures (training or supervision as needed)
- Procurement of Tidal Check Valves (as needed)

SCHEDULE

Maintenance, cleaning and inspection shall be scheduled per occurrence and may include the full asset inventory or a portion of that inventory for each cycle. Maintenance cycles are to be performed quarterly, or more frequently as-needed, based on City requirements.

Tidal check valve, manatee grate, and other miscellaneous outfall repairs shall be scheduled per occurrence, as-needed.

The Contractor must provide at least 72 hours' notice for scheduling changes. Emergency response for unscheduled maintenance requests must be available within 24 hours.

PERFORMANCE METRICS

The following performance metrics will be used to evaluate the Contractor's work:

- Timeliness of completing tasks as per the agreed schedule.
- Accuracy and thoroughness of written condition reports.
- Compliance with safety standards and regulations.
- Responsiveness to unscheduled maintenance requests.

All reports must be submitted in a digital format (PDF or Word) within ten (10) days of completing each maintenance cycle. Reports should include:

- Detailed descriptions of completed tasks.
- Photographic and video evidence.
- Identified issues and recommendations for future maintenance.

PENALTIES

Failure to adhere to the schedule or meet performance standards may result in penalties, including:

- 5% reduction in payment for delayed work (per day).
- Rework at Contractor's expense for substandard services.

EMERGENCY SERVICES

The Contractor must provide emergency maintenance services within 24 hours of the City's request. The bid form includes an emergency call-out fee to account for this service.

Once a contract is awarded, the selected vendor will be required to submit a detailed fee schedule outlining the main pay items for the project. This fee schedule will be reviewed at the pre-construction meeting and will be used to review pay applications and evaluate project progress.

DETAILED SPECIFICATIONS

LOCATIONS

The locations will cover all tide check valves, stormwater outfalls, manatee grates, subaqueous pipelines, piers, piles, and bulkheads Citywide that are City owned throughout the City of St. Pete Beach Florida.

Standard work hours shall be from 7:30 AM until 6:00 PM, Monday through Saturday. No work shall take place on Sundays or on official City holidays without prior approval by the City Manager or designee at least 1 week prior to the scheduled work. A list of current official City holidays can be found on the City's Human Resources website at http://www.stpetebeach.org/hr/holidays.html. Contractor will coordinate scheduling of work with the City's Project Manager and City's Inspector.

ADDITIONAL WORK DETAILS

Contractors or persons wishing to bid on this project are licensed, bondable and insured in accordance to the City's requirements. The Contractor will furnish all necessary labor, materials, tools, equipment and supplies to complete the scope of work. Bid must also include all costs for licenses, permits, and any material disposal fees.

Bidders shall bring questions, discrepancies, omissions, conflicts or doubt as to meaning of any part of Contract Documents to the attention of the City of St Pete Beach Procurement Manager at least ten (10) business days before bid submittal deadline. Clarification of intent of Contract Documents, if necessary, shall be made available to bidders in the form of an Addendum. Failure to request clarification of interpretation of Contract Documents shall not relieve bidders of their responsibilities to perform the work.

The City of St. Pete Beach reserves the right to reject any or all bids or parts of bids, or accept any bid or part thereof deemed to be in the best interests to the City of St. Pete Beach.

STATEMENT OF WORK

The Contractor shall furnish and pay the cost, including sales tax and all other applicable taxes, licenses, permits and fees, of all the necessary materials not furnished by the City and shall furnish and pay for all the superintendence, labor, tools, equipment, transportation, and perform all the work required for the execution of all services listed in the Bidder's Proposal and Bid Form attached hereto and in strict accordance with the Plans, Specifications, and requirements of the City of St. Pete Beach which are attached hereto and made a part hereof, and any amendments thereto and such supplemental Plans and Specifications which may hereafter be approved.

BEGINNING DATE

The Contractor shall, within ten (10) business days after receipt of the Notice of Award and before commencement of any operations hereunder, execute the Agreement. Additionally, the Contractor shall, within twenty (20) business days after receipt of the Notice of Award, provide all required documentation to the City. The Contractor must commence construction activities within thirty (30) business days of NTP to prepare and procure materials. Any change to the start date or the work schedule included with this bid must be submitted in writing to and approved by the City Manager or designee.

COMPLETION OF WORK

The work will be completed on an as-needed basis. Each location that needs to be surveyed, repaired and/or worked on will constitute it's own "job". The contract will be for (3) three years from time of execution (Date of last signature) of the contract with (2) additional (1) one year extensions if agreed upon by the City and vendor. .

EXAMINATION OF SITE

Bidders may visit specific areas with advanced notice.

ASSURANCES

The responding Contractor shall provide a statement of assurance that the Contractor is not presently in violation of any statutes or regulatory rules that might have an impact on the firm's operations. All applicable laws and regulations of the State of Florida, and ordinances and regulations of the City of St. Pete Beach will apply.

TRAFFIC CONTROL AND STAGING AREA

Contractor shall include all costs associated with vehicular and pedestrian traffic control and maintenance during the project. Contractor shall be responsible for providing a staging area. The location of this area must be approved by the City Manager or designee. The Contractor will be required to control the area including any additional fencing or barricades and Contractor will be responsible for the restoration of this and all other staging areas provided by the City.

ASSIGNMENT AND TRANSFER OF CONTRACT

The Contractor shall not assign or transfer this Agreement or any part thereof or any interest therein without consent in writing of the City and the Contractor's Surety, and any such assignment or transfer without such written consent shall be null and void.

SUBCONTRACTS

The Contractor shall not subcontract this Agreement or any part thereof or any interest therein without consent in writing of the City and the Contractor's Surety. Any Subcontractor approved by the City will be subject to the same standards and qualifications as stated in this Contract.

PERFORMANCE PAYMENT BOND

Not required for this contract.

LIQUIDATED DAMAGES

If the work embraced by this Contract is not completed on or before the date set for completion or any extension thereof, the actual damages for the delay will be impossible to determine and in lieu thereof, the Contractor shall pay to the City fixed, agreed, and liquidated damages in the amount of either Five-Hundred Dollars ($500) per day for each calendar day of delay until the work is satisfactorily completed.

PAYMENT

Payment shall be made to the Contractor for work performed under this Contract for the quantities of work as determined in accordance with Payments for Work Completed and Payments Withheld of this Contract. Payment for extra work will be made in accordance with the Changes in Work, Contract Amount, and Contract Time sections below.

CHANGES IN THE WORK

Without invalidating the Contract, the City may, at any time or from time to time, order additions, deletions or revisions in the work authorized by written Change Orders or directives. Upon receipt of a Change Order, the Contractor will proceed with the work involved. All such work shall be executed under the applicable conditions of the Contract documents. If any Change Order causes an increase or decrease in the Contract Amount or any extension or shortening of the Contract Time, an equitable adjustment will be made.

Additional Work performed by the Contractor without authorization of a Change Order will not entitle them to an increase in the Contract Amount or any extension of the Contract Time, except in the case of an emergency (subject to approval by City Manager or designee).

It is the Contractor's responsibility to notify their Surety of any changes affecting the general scope of the Work or change of the Contract Amount and the amount of the applicable bonds shall be adjusted accordingly, and an amended bond document furnished to the City. In the event the City directs the Contractor to make a change in the Work, and if the City and the Contractor do not arrive at a mutually acceptable increase or decrease in the Contract Amount, the contractor shall not use any such lack of mutual acceptance as a basis or cause to stop or otherwise delay the progress or the execution and completion of any of the work ordered, directed or required pursuant to the Contract Documents.

If the Contractor believes an event or situation has occurred which justifies a change in the Contract Amount or Contract Time, he shall deliver a written notice to the City Manager or designee. Each such written notice shall be delivered promptly and no later than fifteen (15) business days after the Contractor first discovered the occurrence. The Contractor shall be deemed to have waived the right to collect any and all costs incurred more than fifteen (15) business days prior to the date of delivery of the written notice and shall be deemed to have waived the right to seek an extension of the Contract Time with respect to any delay in the Progress Schedule which accrued more than fifteen (15) business days prior to the date of delivery of the written notice.

Any such notice shall include sufficient detail to explain the basis of entitlement to a claim for an adjustment to the Contract Amount of Contract Time. When requested by the City Manager or designee, the Contractor shall furnish any additional information and details as may be required to determine the facts or allegations involved, which shall be provided within fifteen (15) business days of the request unless a longer time period is allowed by the City Manager or designee.

The Contractor shall prepare bids detailing proposed adjustments to Contract Amount and/or Contract Time and submit them to the City Manager or designee within fifteen (15) business days of the City's issuance of a proposed Change Order or the Contractor's submitting a written notice of a change or claim for an adjustment to the Contract Amount or Contract Time. Contractor's bids shall be irrevocable for a period of at least sixty (60) business days after receipt by the City. Any delay in the submittal of a complete, adequate and acceptable bid will not justify an increase in Contract Amount or Contract Time. Contractor agrees that it shall give the City access to any and all of Contractor's and Subcontractors' books, records and other materials relating to proposed Change Orders and other claims for adjustment to Contract Amount or Contract Time.

CHANGE OF CONTRACT AMOUNT

The Contract Amount constitutes the total compensation payable to the Contractor for performing the Work. All duties, responsibilities and obligations assigned to or undertaken by the Contractor shall be at his expense without change in the Contract Amount. The Contract Amount may only be changed by written Change Order issued by the City. Any claim for an increase in the Contract Amount shall be in writing and delivered to the City Manager or designee within fifteen (15) business days of the occurrence of the event giving rise to the claim.

All claims for adjustment in the Contract Amount shall be determined by the City Manager or designee. However, no claim for an adjustment to the Contract Amount will be considered for unforeseeable causes that were beyond the fault or negligence of the Contractor or his Subcontractors or supplier such as acts of God, floods, riots, etc. This restriction does not restrict submission of claims for additional Contract Time due to events of this nature. Any change in the Contract Amount shall be incorporated in a Change Order.

Contractor bids or claims shall cover all aspects of the Work involved and shall be fully documented and itemized as to all costs, quantities and charges for overhead and profit. Amounts for Subcontractors or Suppliers at any tier shall be similarly supported. When determining Subcontractors' costs, the methods to

be used shall be those used for the Contractor's costs, except that the term "Subcontractor" shall replace the term "Contractor," context permitting.

Changes in Contract Amount for extensions in Contract Time shall exclude costs that are unaffected or do not relate to the extension in Contract Time, such as: (a) operating costs of construction equipment assigned to the Work on a continuing basis, (b) operating costs and owned/rental costs of construction equipment (crane used for specific lifts, concrete pump used for specific pours, etc.), and (c) fully paid site facilities, tools, etc.

The value of any Work covered by a Change Order or of any claim for an increase or decrease in the Contract Amount where the Work involved is covered by unit prices contained in the Contract Documents shall be determined by application of unit prices to the quantities of the items involved. If the quantities originally contemplated are so changed in a proposed Change Order, that application of the Unit Prices to the quantities proposed will cause substantial inequity to the City or the Contractor, the applicable unit price(s) shall be equitably adjusted by mutual agreement.

If the value of work covered by a Change Order cannot be established or mutually agreed to utilizing previously established unit rates, the value shall be determined by the City on the basis of an estimate of the out-of-pocket cost and percentages that are acceptable to the City for overhead and profit. The out-of-pocket cost shall only include those direct costs which are needed to perform the work such as labor (including payroll taxes, fringe benefits, labor burden and workers' insurance), materials, equipment, and other incidental out-of-pocket construction costs directly involved in the work, including but not limited to small tools, expendables and material costs but shall not include project management or project supervisory costs unless the Change Order includes an increase in the Contract time.

In such case, the Contractor will submit in the form prescribed by the City an itemized cost breakdown together with supporting data.

The amount of credit to be allowed by the Contractor to the City for any such change which results in a net decrease in cost, will be the amount of the actual net decrease as determined by the City. When both additions and credits are involved in any one change, the combined overhead and profit shall be figured on the basis of the net increase, if any.

To be eligible for consideration, the Contractor's written claim for a change in the Contract price, including claim(s) from sub-contractors, shall include an itemized cost breakdown with supporting data as described below:

A. <u>For labor</u>: Provide written documentation from the Contractor and Subcontractors or others as appropriate in the form of a detailed breakdown by each labor classification involved indicating the number of hours of Work involved and the hourly payroll rate applicable to each to substantiate the basis and amount of the direct labor cost. The direct labor cost may be increased to provide an allowance for indirect payroll costs (labor burden), such as payroll taxes, fringe benefits, and workers insurance after all premium discounts, rebates and other appropriate reductions have been taken.

B. <u>For material, supplies, equipment, furnishings, etc., to be installed or included in the Work</u>: Provide written documentation from the Contractor and Subcontractors, suppliers, etc., to substantiate the basis and amount of the various cost items involved. Material costs shall reflect the Contractor's reasonably anticipated net actual cost after consideration of trade discounts and volume rebates.

C. For construction equipment: Provide written documentation in the form of a detailed breakdown by each construction equipment category, indicating the applicable unit rates (i.e., dollar amount per hour, dollar amount per day etc.,) and the number of hours, days, etc. to substantiate the basis and amount of the construction equipment out-of-pocket costs.

CHANGE OF CONTRACT TIME

The Contract Time may only be changed by written Change Order. Any claim for an extension in the Contract Time shall be in writing and include an analysis of the Progress Schedule as further described in the Specifications and shall be delivered to the City Manager or designee within fifteen (15) business days of the occurrence of the event giving rise to the claim. All claims for adjustment in the Contract Time shall be determined by the City Manager or designee. Any change in the Contract Time resulting from any such claim shall be incorporated in a Change Order. The Contract Time may be extended for an amount equal to time lost due to unforeseeable causes beyond the control of the Contractor (and his Subcontractors and Suppliers) if he makes a claim therefrom. Such delays shall include, but not be restricted to, acts or neglect by any separate Contractor employed by the City; fires; floods; labor disputes; epidemics; or acts of God.

All time limits stated in the Contract Documents are of the essence to the Contract. The stated time limits are agreed to be adequate to complete the work, including the procurement, manufacture and delivery of all material and equipment required, and account for any and all potential impact, delays, disruptions and costs that may be expected.

CITY'S RIGHT TO DIRECT PURCHASE

The City has reserved the right to purchase certain items and materials for this project directly in an effort to save applicable sales tax in compliance with Florida Law.

The City will issue purchase orders directly to the vendors supplying the equipment being directly purchased by the City for this project. Each Purchase Order will be accompanied by the City's Certificate of Exemption and a Certificate of Entitlement. All direct purchase vendor invoices will be issued to the City of St. Pete Beach, and the City will issue payment to each direct purchase vendor from City funds. The City will take title to the equipment at time of delivery from the vendor and will issue a separate Certificate of Entitlement for each purchase order.

The Contractor shall assist the City with receipt of materials furnished by the City in accordance with these Special Provisions including, but not limited to, verifying correct quantities, verifying documents of orders in a timely manner, providing and obtaining all warranties and guarantees required by the Contract Documents, assist with inspection of the goods at the time of delivery and notify the City immediately of any deficiencies noted. It is understood that the owner assumes the risk of damage or loss during the time that the building materials are physically stored at the job site prior to their installation or incorporation into the project. The Contractor shall coordinate with the City regarding the delivery schedules, sequence of delivery, loading orientation, and other arrangements normally required by the Contractor for the particular material furnished.

As City Furnished Materials are delivered to the job site and accepted by the City, the City shall notify the Contractor who will assist the City to visually inspect all shipments from the suppliers. The City will approve the vendor's invoice for material delivered upon adequate inspection and recommendation of the Contractor. The City shall assure that each delivery of City Furnished Materials is accompanied by documentation adequate to identify the Purchase Order against which the purchase is made and Contract Documents including but not limited to Contract, Plans, Specifications, and approved Shop Drawings. This documentation may consist of a delivery ticket, bill of lading and an invoice from the supplier conforming

to the Purchase Order together with such additional information as the City may deem necessary.

PAYMENTS FOR WORK COMPLETED

Partial payments will be made as the work progresses (if applicable) at the end of each calendar month, or as soon thereafter as practicable on estimates made by the City Manager or designee and as approved by the City, provided that the Contractor is performing the overall job in a diligent manner. In making partial payments, there shall be retained five percent (5%) on the amount of each estimate until final completion and acceptance of all work covered by the Contract. Upon completion and acceptance of the work, the City Manager or designee shall issue a certificate that the work has been completed and accepted by them under the conditions of the Contract and shall make and approve the final estimate of the work. The entire balance found to be due the Contractor, including that retained by the City, should be paid to the Contractor. Such payment shall be conditioned, however, upon the submission by the Contractor of evidence satisfactory to the City that all claims for labor, material, and any other outstanding indebtedness in connection with the Contract have been paid. Such payment shall also be conditioned upon approval and acceptance of the construction and improvements by the City.

If after the work has been substantially completed, full completion thereof is materially delayed through no fault of the Contractor and the City Manager or designee so certifies, the City shall upon the Certificate of the City Manager or designee, and without terminating the Contract make payment for the balance due for that portion of the work fully completed and accepted. Such payment shall be made under the terms and conditions governing final payment, except that it shall not constitute a waiver of claim. If such delay occurs and payment is made under this clause, the Contractor shall nevertheless be prepared to complete the work in a timely manner upon the remedy or removal of such delay, and shall be bound under this Contract for the completion of such work unless this Contract is otherwise terminated. All payments will be made in accordance with the Local Government Prompt Payment Act, Chapter 218, Florida Statutes.

PAYMENTS WITHHELD

The City Manager or designee may withhold, or, on account of subsequently discovered evidence, nullify the whole or part of any estimate to such extent as may be necessary to protect the City from loss on account of:

a) Defective work not remedied

b) Claims and/or liens filed or reasonable evidence indicating probable filing of claims

c) Failure of the Contractor to make payments properly to Subcontractors or for material or labor

d) A reasonable doubt that the Contract can be completed for the balance then unpaid

e) Damage to another Contractor

f) Failure of the Contractor to keep their work progressing in accordance with their time schedule

FINAL PAYMENTS

Upon the completion and acceptance of the work, the City Manager or designee shall issue a certificate that designates that the whole work provided for in this Contract has been completed and accepted by him under the conditions and the terms thereof and shall make the final estimate of the work. After issuance of the certificate, the entire balance found to be due the Contractor, including said retained percentage by the City in accordance with existing state laws as may be retained lawfully by said City, shall pay excepting such

sums to the Contractor.

Before the approval of the final payment, the Contractor shall submit evidence satisfactory to the City that states that all payrolls, materials, bills and outstanding indebtedness in connection with this Contract have been paid.

LIENS

If at any time there shall be evidence of any lien or claim for which the City might become liable and which is chargeable to the Contractor, the City shall have the right to retain out of any payment then due or thereafter to become due, an amount sufficient for complete indemnification against such lien or claim. In the event the City has already paid to the Contractor all sums due under this contract or the balance remaining unpaid is insufficient to protect the City, the Contractor and his Surety shall be liable to the City for any loss so sustained.

RESPONSIBILITY OF THE CITY MANAGER OR DESIGNEE

The term "City Manager or designee" wherever used in the Contract shall be the City of St. Pete Beach or its duly authorized representative. Notices of any change in the City Manager or designee shall be given in writing by the City to the Contractor. The City Manager or designee shall have full authority to interpret the Plans and Specifications and shall determine the amount, quality, and acceptance of the work and supplies to be paid for under the Contract and every question relative to the fulfillment of the terms and provisions therein. It shall be the duty of the City Manager or designee to enforce the Plans and Specifications in a fair and unbiased manner. If a variation from any requirements is allowed the City Manager or designee shall grant the same in writing with the reasons for his action outlined, and such action will not invalidate or change the Contract in any other manner.

INTENT OF PLANS AND SPECIFICATIONS

The Contractor shall keep on the job a copy of the Plans and Specifications and shall at any time give the City Manager or designee access thereto. Anything mentioned in the Specifications and not shown on the Plans or shown on the Plans and not mentioned in the Specifications, shall be of like effect as if shown or mentioned in both. The Contractor shall not take advantage of any errors, discrepancies or omissions that may exist in the Plans and Specifications but shall immediately call them to the attention of the City Manager or designee whose interpretation or correction thereof shall be conclusive. Should a conflict occur between the General Specifications and any Supplemental Specifications and/or Plans, the latter shall govern.

LICENSES AND PERMITS

The Contractor shall obtain and pay for all necessary City licenses and work permits and shall faithfully comply with all laws, ordinances and regulations, (Federal, State or local) which may be applicable to the operations to be conducted hereunder, except for those permits obtained by the City. Notwithstanding the provisions above, the contractor is responsible for non-compliance of all permit requirements, including all fines resulting from Contractor's non-compliance of said requirements.

Chapter II, Section II-4, "Registration of Licenses Obtained From Other Municipalities:" "Persons, partnerships, corporations, or other business entities doing business with the City who are not required to obtain a City occupational license, but who must have either a State or County or Municipal occupational license from another municipality, shall register such occupational license with St. Pete Beach Community Development Department. The City may charge a fee for such registration." The Contractor shall be

responsible for obtaining all City, County, State and Federal permits required by those government agencies and must provide documentation of receipt of those permits prior to project commencement. This shall include a notice to commence work letter and the applicable fee, if required. Any sub-contractor hired by the contractor awarded the project, MUST also register their license with the City.

SUPERINTENDENCE

The Contractor shall constantly superintend all the work embraced in this Contract in person or by a responsible agent who shall have in writing, full authority to act for them and to carry out all the instructions given by the City Manager or designee.

LABOR PROVISIONS

The Contractor and his Subcontractors shall discharge, whenever ordered to do so by the City Manager or designee, any employee who is disorderly or whose conduct in the opinion of the City Manager or designee is detrimental to the prosecution of the work. No person whose age or physical condition is such as to make this employment dangerous to his/her health and safety or to the health and safety of others shall be employed on the work, and in no event shall any persons under the age of sixteen (16) years be employed.

INSURANCE

The Contractor shall procure and maintain at his/her own expense, during the life of the Contract, liability insurance as hereinafter specified. All such insurance shall be subject to the approval of the City for adequacy of protection and shall include a provision preventing cancellation without twenty (20) business days prior notice to the City in writing. The City shall be included as an additional insured on all liability insurance. The liability insurance required is as follows: Contractor's General Public Liability and Property Damage Insurance issued to the Contractor and protecting the Contractor from all claims for personal injury, including death, and all claims for destruction of or damage to property, arising out of or in connection with any operations under this Contract, whether such operations be by the Contractor or by any Subcontractor hired by the Contractor or anyone directly or indirectly employed by the Contractor or hired by the Contractor.

The successful Contractor shall supply and maintain insurance which defends, indemnifies and holds harmless the City of St. Pete Beach, its officers, employees and agents from and against any and all liability, damage claims, demands, costs, judgments, fees, attorney's fees or loss arising directly out of acts or omissions hereunder by the Contractor or third party under the direction or control of the Contractor. Such general and excess liability coverage shall be primary to any other coverage carried by the City of St Pete Beach. Contractor must furnish the City with Certificate of Insurance prior to commencement of work. An approved Certificate of Insurance furnished by the Contractor's carrier to guarantee the Contractor being insured with the City of St Pete Beach must be named as a certificate holder for this contract. The following minimum coverage:

- Commercial General Liability Insurance $1,000,000.00.
- Comprehensive General Liability Insurance of $1,000,000.00 each occurrence.
- Personal Injury for $1,000,000.00 each occurrence.
- Automobile Liability $1,000,000.00.
- General Workers Compensation Insurance as required by Florida law.
- Longshore Harbor Workers Compensation Insurance

PROTECTION OF WORK AND PROPERTY

The Contractor shall continuously maintain adequate protection of all their work and materials from damage or theft and shall protect the City's property and all adjacent property from injury or loss arising in connection with activities under their Contract. The Contractor shall make good any such damage, injury, or loss, except such as may be caused by agents or employees of the City.

The Contractor shall take, use, provide, and maintain all necessary precautions, safeguards, and protection to prevent accidents, or injury to persons or property on, about, or adjacent to the site of the work. Should the situation arise that physical security is needed the Contractor will provide security on off days and holidays. The Contractor shall be responsible for all charges incurred with such action.

The Contractor shall post danger signs warning against any hazards created by the work being done under their Contract. They shall designate a responsible member of their organization on the work, whose duty shall be the prevention of accidents, and the name of the person so designated shall be reported to the City Manager or designee and City in writing. In an emergency affecting the safety of life, or of the work or adjoining property, the Contractor, without special instruction or authorization from the City Manager or designee, or City, is hereby permitted to act, at their own discretion, to prevent such threatened loss or injury, and they must take such action if so instructed or authorized by the City Manager or designee. The Contractor shall also protect adjacent property as required by law.

PARKING

The Contractor shall arrange with City Manager or designee for temporary parking areas to accommodate construction personnel and construction equipment. Note that limited parking spaces are available in the City of St. Pete Beach. The Contractor will be asked to coordinate with the City's representative on site on a regular basis to minimize the impact on residents and visitors.

TRANSPORTATION, HANDLING AND STORAGE

The Contractor shall transport, handle, protect and store products in accordance with manufacturer's instructions and all environmental regulatory agencies.

VEHICLES

Business vehicles shall be identified on both sides with the name of the company.

ENVIRONMENTAL PROTECTION

It shall be the Contractor's responsibility to implement construction methods, best management practices, and erosion control methods that avoid water pollution as required by the State of Florida Department of Environmental Protection (FDEP), City of St. Pete Beach, and Pinellas County. Any Contractors in violation of the City of St. Pete Beach Regulations, Pinellas County Regulations, Florida Department of Environmental Protection Regulations, or any other regulatory agency regulations shall be the sole responsibility of the Contractor. The Contractor shall hold harmless the City of St. Pete Beach and the City Manager or designee from any fines and litigation resulting from the Contractor's actions. The Contractor shall pay all attorneys' fees, fines, penalties and any other such expenses resulting from the Contractor's actions. The Contractor shall provide all necessary measures to prevent any materials whatsoever from entering the waterway except for those materials, which are shown, on the plans as completed structures. The Contractor shall provide MSDS sheets to the City Manager or designee on all applicable materials before applying those materials. The Contractor shall secure the necessary education, certifications,

licenses and permits required by state and local agencies to operate and manage a construction site, including but not limited to, FDEP requirements related to Coastal Construction Control Line. The Contractor shall abide by all rules and regulations set forth and required by the City of St. Pete Beach's MS4 NPDES Permit.

TIMELY DEMAND FOR STAKES AND INSTRUCTIONS

The Contractor shall provide reasonable and necessary materials, opportunities, and assistance for setting stakes and making measurements, including the furnishing of a rodman, or a chainman at intermittent times during the construction period. They shall not proceed until they have received such stakes and instructions as may be necessary as the work progresses. The work shall be done in strict conformity with such stakes and instructions. The Contractor shall carefully preserve benchmarks, reference points and stakes, and in case of willful or careless destruction, they will be charged with the resulting expense and shall be responsible for any mistakes that may be caused by their unnecessary loss or disturbance.

WORKMANSHIP

The Contractor acknowledges that they have satisfied themselves as to the nature and location of the work; the general and local conditions including but not restricted to those bearing upon transportation, disposal, handling and storage of materials; availability of labor, water, electric power, roads; and uncertainties of weather, surface conditions, subsurface conditions, tides or similar physical conditions at the site, the character of equipment and facilities required to prosecute the work. Any failure by the Contractor to acquaint themselves with any aspect of the work or with any of the applicable conditions shall not relieve the Contractor from the responsibility to successfully perform the work under the Contract Documents, nor shall it be considered the basis for any claim for additional time or compensation.

UTILITIES

The Contractor shall anticipate all underground obstructions such as water lines, gas lines, sewer lines, utility lines, or any other public or private facilities and debris. In all cases where existing utility lines may be interfered with by the work, the Contractor shall give a minimum of thirty-six (36) hours' notice to the owners of such utilities, to permit them to relocate the lines prior to construction. No extra payment shall be allowed for the removal, replacement, repair or possible increased cost caused by underground obstructions. The location of existing structures and utilities provided in the plans are approximate only. Any damage to existing structures to remain or work of any kind shall be repaired or restored promptly by, and at the expense of the Contractor.

The Contractor shall at all times protect all desirable trees, plants, curbs, sidewalks, irrigation components, and structures not requiring removal to accomplish the work, whether or not they are shown on the plans. The Contractor must contact the City to obtain tree removal permits for the removal of any tree not identified for removal in the Project Plans.

In matters of restoration, all materials, construction, and workmanship shall be acceptable to, and approved by the City of St. Pete Beach and the City Manager or designee. No changes in size, shape, configuration, location, materials, or construction shall be made without prior written authorization from the City Manager or designee. Any demolition debris and other debris shall be hauled offsite and properly disposed of by the Contractor and shall be inclusive to the prices as stated in the BID SCHEDULE, unless otherwise stipulated as part of the project to remain.

No interruption of ingress and egress to private property shall be made unless the Contractor has made prior arrangements acceptable to the owner of the affected property. The City Manager or designee shall

notify affected residents/property owners of impending activity or inconvenience via door hanger.

The Contractor shall provide all traffic control devices utilized during construction and meet the requirements set forth in the Florida State Department of Transportation "Manual on Traffic Control and Safe Practices for Street and Highway Construction, Maintenance, and Utility Operations."

CLEANING UP

Upon completion or termination of the work the Contractor shall, as directed by the City Manager or designee, remove from the vicinity of the work all equipment and temporary structures, waste materials and rubbish resulting from his operations, leaving the premises in a neat and presentable condition. All debris generated by the Contractor will be removed before leaving the area. All areas will be raked to remove smaller debris. All surrounding sidewalks, parking lots and roadways will be cleared of any dust or debris generated by the Contractor. In the event of their failure to do so, the City at the expense of the Contractor may do the same, and their Surety shall be responsible.

DEFECTIVE WORK OR MATERIAL

The Contractor shall promptly remove from the premises all work and materials condemned by the City Manager or designee as failing to conform to the Contract, whether incorporated or not, and the Contractor shall promptly replace and re-execute his own work in accordance with the Contract and without expense to the City and shall bear the expense of making good all work of other Contractors destroyed or damaged by such removal or replacement.

If the Contractor does not remove such condemned work or materials within a reasonable time after notice, the City may remove them and store the materials at the expense of the Contractor. If the Contractor does not pay the expense of such removal within ten (10) business days' time thereafter, the City may, upon thirty (30) business days written notice sell such materials at auction or at private sale and shall account for the net proceeds thereof after deducting all the costs and expenses that should have been borne by the Contractor.

DISPUTE RESOLUTION

The Contract shall be construed under Florida law. The parties agree that all controversies, claims and other matters in question between the parties arising out of or relating to this Contract or its breach shall be resolved through mediation. Upon notice of any party to the Contract of a dispute, question or controversy, the parties shall agree to the appointment of a qualified mediator. A qualified mediator is a person who has received at least forty (40) hours of mediation training and has actual experience as a mediator in resolving contract disputes. If the dispute, question or controversy is not resolved through mediation within sixty (60) business days of a notice of the dispute between the parties, the City reserves the right to seek resolution through court action.

INDEMNIFICATION

In consideration of the payment of ten dollars ($10.00) as part of the above purchase price, Contractor shall indemnify, defend, and hold harmless the City, its officers and employees, from liabilities, damages, losses and costs, including but not limited to, reasonable attorney's fees, to the extent caused by the negligence, recklessness, or intentional wrongful misconduct of the responding firm and any persons employed or utilized by the responding firm in the performance of the Contract.

GENERAL WARRANTY

Neither the final certificate nor any provision in the Contract Documents nor partial or entire occupancy of the premises by the City shall constitute an acceptance of work not done in accordance with the Contract Documents or relieve the Contractor of liability in respect to any express warranties or responsibility for faulty materials or workmanship. The Contractor shall remedy any defects in the work and pay for any damage to other work resulting therefrom that shall appear within a period of eighteen (18) months from the date of final acceptance of the work, unless a longer period is specified. The City shall give notice of observed defects with reasonable promptness.

LAND OF CITY, USE OF, BY CONTRACTOR

The City shall provide the land upon which the work under this Contract is to be done, and will, so far as is convenient, permit the Contractor to use as much of the land as is required for the erection of temporary construction facilities and storage of materials, together with the right of access to same, but beyond this, the Contractor shall provide, at his/her cost and expense, any additional land required. It will be the responsibility of the Contractor to repair or restore to the satisfaction of the City, at their own expense, any damage to land used for the above stated activities or any other activities approved by the City.

OTHER WORK

Wherever work being done by the City or by other Contractors is contiguous to work covered by this Contract, the respective rights of the various interests involved shall be established by the City Manager or designee to secure the completion of the various portions of the work in general harmony.

OTHER CONTRACTS

The City may award other Contracts. The Contractor shall fully cooperate with such other Contractors and carefully fit his/her own work to that provided under other Contracts, as may be with the performance of work by any other Contractor or City.

COOPERATIVE PURCHASING

Pursuant to their own governing laws and subject to the agreement of the Contractor, governmental entities may make purchases under the terms and conditions contained in the executed Contract, if agreed to by Contractor. Such purchases are independent of the Contract between the City and the Contractor, and the City is not a party to these transactions. Agencies seeking to make purchases under this Contract are required to follow the requirements of Rule 60A-1.045(5), F.A.C.

DELAYS AND EXTENSION OF TIME

If the Contractor should be delayed at any time in the progress of the work by an act or neglect of the City or the City Manager or designee, or of any employee of either, or by any separate Contractor employed by the City, or by changes ordered in the work, or by strike, lockouts, fire, unusual delay in transportation, unavoidable casualties, or any cases beyond the Contractor's control, or by delay authorized by the City Manager or designee, or by any cause which the City Manager or designee shall decide to justify the delay, then the time of completion shall be extended for such reasonable time as the City Manager or designee may decide. No such extension shall be made for a delay that occurs more than five (5) business days before a claim is made in writing to the City Manager or designee. In the case of a continued cause of delay, only

one (1) claim is necessary. This section does not exclude the recovery of damages for delay by either party under other provisions in the Contract Documents.

CITY'S RIGHT TO TAKE OVER THE WORK

If the Contractor shall be adjudged bankrupt, or if they should make a general assignment for the benefit of its creditors, or if a receiver should be appointed to take over their affairs, or if they should fail to prosecute their work with due diligence and carry the work forward in accordance with its' work schedule and the time limits set forth in the Contract Documents, or if they should fail to substantially perform one or more of the provisions of the Contact Documents to be performed by them, the City may serve written notice on the Contractor and the Surety on its' performance bond, stating the City's intention to exercise one of the remedies hereinafter set forth and the grounds upon which the City bases its right to exercise such remedy. In any event, unless the matter complained of is satisfactorily cleared within ten (10) business days after the service of such notice, the City may, without prejudice to any other right or remedy exercise one of such remedies at once; having first obtained a certificate from the City Manager or designee that such sufficient cause exists to justify such action.

The City may terminate the services of the Contractor, which termination shall take effect immediately upon service of notice thereof on the Contractor and their Surety, whereupon the Surety shall have the right to take over and perform the Contract. If the Surety does not commence performance of the Contract within ten (10) ten days after service of the notice of termination, the City may itself take over the work, take possession of and use all materials, tools, equipment, and appliances on the premises and prosecute the work to completion by such means as it shall deem best. In the event of such termination of their service, the Contractor shall not be entitled to any further payment under their Contract until the work is completed and accepted. If the City takes over the work and the unpaid Contract balance exceeds the cost of completing the work, including compensation for damages or expenses incurred by the City through the default of the Contractor, the excess unpaid Contract balance shall be paid to the Contractor. If the City takes over the work and the unpaid Contract balance does not exceed the cost of completing the work, including compensation for damages or expenses incurred by the City through the default of the Contractor, the Contractor and his Surety shall pay the difference to the City. The City Manager or designee shall certify such cost, expenses, and damages.

The City may take control of the work and either make good the deficiencies of the Contractor itself or direct the activities of the Contractor in doing so, employing such additional help as the City deems advisable. In such event, the City shall be entitled to collect from the Contractor and his Surety, or to deduct from any payment then or thereafter due the Contractor, the costs incurred by it through the default of the Contractor, provided the City Manager or designee approves the amount thus charged to the Contractor.

The City may require the Surety on the Contractor's bond to take control of the work at once and see to it that all deficiencies of the Contractor are made good with due diligence. As between the City and the Surety, the entire cost of making good such deficiencies shall be borne by the Surety. If the Surety takes over the work, either upon termination of the services of the Contractor or upon instructions from the City to do so, the provisions of the Contract Documents shall govern in respect to the work done by the Surety, the Surety being substituted for the Contractor as to such provisions, including provisions as to the payment for the work and provisions of this section as to the right of the City to do the work itself or to take control of the work.

RIGHT OF OCCUPANCY

The City shall have the right, if necessary, to take possession of and to use any completed or partially

completed portions of the work, if such use be approved by the City Manager or designee even if the time for completing the entire work or such portions of the work has not expired and even if the work has not been finally accepted. Such possession and use shall not constitute an acceptance of such possession and use if it materially interferes with the Contractor's operations. The City shall also have the right to enter the premises with the Contractor for the purpose of doing work not covered by its Contract.

ACCEPTANCE

Final inspection and acceptance of the work shall be made for the City by the City Manager or designee. Such inspection shall be made as soon as practical after the Contractor has notified the City in writing that the work is ready for such inspection.

WAIVER

It is expressly understood and agreed that any waiver granted by the City Manager or designee of any term, provision, or covenants of the Contract shall not constitute a precedent or breach of the same or any other terms, provisions, or covenants of the Contract. Neither the acceptance of the work by the City nor the payment of all or any part of the sum due the Contractor hereunder shall constitute a waiver by the City of any claim which the City may have against the Contractor or Surety under this Contract or otherwise.

INSPECTION

The City Manager or designee and his representative shall, at all times, have access to the work during its construction and shall be furnished with every reasonable facility for ascertaining that the stock and materials used and employed, and the workmanship, are in accordance with the requirements and intentions of the Plans. All work done and all materials furnished shall be subject to their inspection and approval by the City Manager or his designee. If any work should be covered up without approval or consent of City Manager or designee, it must, if required by the City Manager or designee, be uncovered for examination at the Contractor's expense.

The City Manager or designee may order re-examination of questioned work and if so ordered, the Contractor must uncover the work. If such work were found in accordance with the Contract Documents, the City shall pay the cost of re-examination and replacement. If such work be found not in accordance with the Contract Documents, the Contractor shall pay such costs unless they show that the defect in the work was caused by another Contractor, and in that event, the City shall pay such cost.

The inspection of the work shall not relieve the Contractor of any of their obligations to fulfill their Contract as prescribed, and defective work shall be made good and unsuitable materials shall be rejected, notwithstanding that such defective work and materials have been previously overlooked and accepted on estimates for payment. All work shall be tested to the satisfaction of the City Manager or designee before acceptance.

BID REVIEW AND CONTRACT AWARD

Failure to submit all documents requested at the time of bid may deem the Contractor's bid ineligible for award. The City of St. Pete Beach reserves the right to reject any or all bids or parts of bids or accept any bid or part thereof deemed to be in the best interests to the City of St. Pete Beach. The City shall be the sole final judge of qualifications of the bidder to perform service and reserves the exclusive right to accept or reject any bids as it deems to be in the best interests of the City. The City may waive any informality.

LOCAL, STATE AND FEDERAL COMPLAINCE REQUIREMENTS

The laws of the State of Florida do apply to any purchase made under this Request for Bid. Proposers shall comply with all local, state, and federal directives, orders and laws as applicable to their bid and subsequent contracts include but not limited to Equal Employment Opportunity, Minority Business Enterprise, and OSHA as applicable to this contract.

Compliance with Fla. Stat. 448.095:

- Contractor agrees to comply with all applicable portions of Fla. Stat. 448.095. Contractor must use the U.S. Department of Homeland Security's E-Verify System, hhtps://e-verify.uscis.gov/emp, to verify the employment eligibility of all employees hired on or after January 1, 2021 during the term of this Agreement.

- Subcontractors (i) Contractor shall also require all subcontractors performing work under this Agreement to use the E-Verify system for any employees they may hire during the term of this Agreement. (ii) Subcontractors shall provide Contractor with an affidavit stating the subcontractor does not employ, contract with, or subcontract with an unauthorized alien, as defined by Fla. Stat. 448.095 (iii) Contractor shall provide a copy of such affidavit to the City upon receipt and shall maintain a copy for the duration of the Agreement.

- Contractor must provide evidence of compliance with Fla. Stat. 448.05 by January 1, 2021. Evidence may consist of, but is not limited to, providing notice of Contractor's E-Verify number.

- Failure to comply with this provision is a material breach of the Agreement, and the City may choose to terminate the Agreement at its sole discretion. Contractor may be liable for all costs associated with the City securing the same services, inclusive, but not limited to, higher costs for the same services and rebidding costs (if necessary). Any challenge to termination under this provision must be filed in the Circuit Court no later than 20 calendar days after the date of termination. If this agreement is terminated for a violation of the statue by the Contractor, the Contractor may not be awarded a public agreement for a period of 1 year after date of termination.

RESERVES THE RIGHT

The City reserves the right to accept or reject any and/or all bids, to waive irregularities and technicalities, and to request re-submission. If only one bid is received by the bid date and time listed, the bid may or may not be rejected by the City depending upon bid review and the needs of the City.

The City reserves the right to select a firm with or without additional interviews and may decide to select any of the firms submitting bids. The City reserves the right to award the contract to a responsible proposer submitting a responsible bid, with a resulting negotiated agreement which is most advantageous and in the best interest of the City.

Proposers, bidders, their agents, and associates shall not contact or solicit any City Commission member, City employee, or official regarding this RFB during any phase of the bidding process. Failure to comply with the provision may result in disqualification of the bidder, at the option of the City. Only that individual listed, or an approved designee, as the contact person for this RFB shall be contacted.

SUBMITTAL WITHDRAWAL

After submittals are opened, corrections or modifications to submittals are not permitted, but a responding firm may be permitted to withdraw an erroneous submittal prior to the award by the City Commission, if the following is established:

- That the responding firm acted in good faith in submitting the submittal;
- That in preparing the submittal there was an error of such magnitude that enforcement of the submittal would work severe hardship upon the respondent;
- That the error was not the result of gross negligence or willful inattention on the part of the respondent;
- That the error was discovered and communicated to the City within twenty-four (24) hours of submittal opening, along with a request for permission to withdraw the submittal; or
- The responding firm submits documentation and an explanation of how the error was made.

CONE OF SILENCE

Respondents to this solicitation or persons acting on their behalf may not contact, between the release of the solicitation and the end of the 72-hour period following the agency posting the notice of intended award, excluding Saturdays, Sundays, and state holidays, any employee or officer of the executive or legislative branch concerning any aspect of this solicitation, except in writing to the procurement officer or as provided in the solicitation documents. Violation of this provision may be grounds for rejecting a response.

TERMINATION

The resulting contract may be canceled by the City when:

- Sufficient funds are not available to continue its full and faithful performance of this contract.
- There is sub-standard or non-performance of contract.
- The City wishes to terminate at any time and for any reason, upon giving thirty (30) days prior written notice to the other party.

The resulting contract may be canceled by either party in the event of substantial failure to perform in accordance with the terms by the other party through no fault of the terminating party.

FISCAL NON-FUNDING

If funds for the requested services described herein are not appropriated via the annual budget adoption process, the City reserves the right to cancel this Agreement immediately upon written notice to the vendor.

PROJECT RECORDS

The awarded firm shall maintain auditable records concerning the procurement to account for all receipts and expenditures, and to document compliance with the Contract. These records shall be kept in accordance with generally accepted accounting methods, and the City of St. Pete Beach reserves the right to determine the record-keeping method in the event of non-conformity. These records shall be maintained for three (3) years after final payment has been made and shall be readily available to City personnel with reasonable notice, and to other persons in accordance with the Florida Public Disclosure Statutes. Additionally, the awarded firm shall abide by and comply with Florida Statutes regarding public records. Specifically, the firm shall be aware of the provisions found in Section 119.0701, Florida Statutes.

Upon completion of the project, all reports, studies, recommendations, forms, and other project specific information will need to be submitted in paper and in an electronic file format (.PDF, .JPEG) on CD or USB storage device.

IV. REFERENCES & MINIMUM QUALIFICATIONS

Provide at least three (3) or more professional business references with which you have contracted to provide similar services in the past five (5) years. Include the name of the person, its organization and telephone number, fax number, and e-mail address. Include any governmental agencies, with the same contact and descriptive information for which you have provided similar service within the past five (5) years.

Provide a brief description of the history and capabilities of the firm. Describe the types of projects or services the firm performs/has performed and the dollar value of each. Provide information regarding your firm's ability to complete this project. Demonstrate that the firm's personnel have experience with similar projects.

Identify all unresolved and ongoing claims and disputes against your firm in excess of $500,000. Include any claims against the principals of your firm or any claims your company may have against a third party. Provide a history of litigation, including the outcomes, for the past five (5) years.

The responding firm shall provide a statement of assurance that the firm is not presently in violations of any statutes or regulatory rules that might have an impact on the firm's operations. All applicable laws and regulations of the State of Florida and ordinances and regulations of the City of St. Pete Beach will apply.

Provide the overall bonding capacity for the company and provide a history of any claims against the bidder's previous bonds for the past five (5) years.

The City shall be the sole final judge of qualifications of bidder to perform service and reserves the exclusive right to accept or reject any bid as it deems to be in the best interests of the City. The City reserves the right to make such investigation, as it deems necessary, to determine the ability of any proposer to perform the work or service requested. Failure to comply with the requirements of this section may be grounds for rejecting a response.

V. PUBLIC ENTITY CRIMINAL AFFIDAVIT

SWORN STATEMENT – PUBLIC ENTITY CRIMES

PURSUANT TO § 287.133 (3)(a), FLORIDA STATUTES, ON PUBLIC ENTITY CRIMES
THE FORM MUST BE SIGNED AND SWORN TO IN THE PRESENCE OF A NOTARY PUBLIC OR OTHER OFFICIAL AUTHORIZED TO ADMINISTER OATHS.

1. This sworn statement is submitted to: City of St. Pete Beach

   by: _____
   (Print individual's name and title)

   for: _____
   (Print name of entity submitting sworn statement)

   at: _____
   (Business address)

   and (if applicable), its Federal Employer Identification Number (FEIN):

   _____
   (FEIN)

   or, if the entity has no FEIN, include the Social Security Number:

   _____
   (SSN)

   by the individual signing this sworn statement:

   _____
   (Signature)

2. I understand that a "public entity crime" as defined in § 287.133 (1)(g), Fla. Stat., means a violation of any State or Federal law by a person with respect to and directly related to the transaction of business with any public entity or with an agency or political subdivision of any other state or of the United States including, but not limited to, any bid or contract for goods or services, any lease for real property, or any contract for the construction or repair of a public building or public work, involving antitrust, fraud, theft, bribery, collusion, racketeering, conspiracy, or material misrepresentation.

3. I understand that "convicted" or "conviction" as defined in § 287.133 (1)(b), Fla. Stat., means a finding of guilt or a conviction of public entity crime with or without an adjudication of guilt in any Federal or State trial court of record relating to charges brought by indictment or information after July 1, 1989, as a result of a jury verdict, non-jury trial, or entry of a plea of guilty or nolo contendere.

4. I understand that an "affiliate" as defined in § 287.133 (1)(a), Fla. Stat., means:
   a. A predecessor or successor of a person convicted of a public entity crime or
   b. An entity under the control of any natural person who is active in the management of the entity and who has been convicted of a public entity crime. The term "affiliate" includes those officers, directors, executives, partners, shareholders, employees, members, and agents who are active in the management of an affiliate. The ownership by one (1) person of shares constituting a controlling interest in another person or a pooling of equipment or income among persons when not for fair market value under the arm's length agreement, shall be a prima facie case that one (1) person controls another person. A person who

knowingly enters into a joint venture with a person who has been convicted of a public crime in Florida during the preceding thirty-six (36) months shall be considered an affiliate.

5. I understand that a "person" as defined in Section 287.133 (1)(e), Fla. Stat., means any natural person or any entity organized under the laws of any state or of the United States with the legal power to enter into a binding contract and which bids or applies to bid on contracts let by a public entity, or which otherwise transacts or applies to transact business with a public entity. The term "person" includes those officers, directors, executives, partners, shareholders, employees, members, and agents who are active in management of an entity.

6. Based on information and belief, the **statement which I have marked below is true** in relation to the entity submitting this sworn statement (indicate which statement applies).

☐ Neither the entity submitting this sworn statement, nor any of its officers, directors, executives, partners, shareholders, employees, members, or agents who are active in the management of the entity nor any affiliate of the entity has been charged with and convicted of a public entity crime subsequent to July 1, 1989.

☐ The entity submitting this sworn statement or one (1) or more of its officers, directors, executives, partners, shareholders, employees, members, or agents who are active in the management of the entity or an affiliate of the entity has been charged with and convicted of a public entity crime subsequent to July 1, 1989.

☐ The entity submitting this sworn statement or one (1) or more of its officers, directors, executives, partners, shareholders, employees, members, or agents who are active in the management of the entity or an affiliate of the entity has been charged with and convicted of a public entity crime subsequent to July 1, 1989. However, there has been a subsequent proceeding before a Hearing Office of the State of Florida, Division of Administrative Hearings and the Final Order entered by the Hearing Officer determined that it was not in the public interest to place the entity submitting this sworn statement on the convicted vendor list (attach a copy of the final order).

I UNDERSTAND THAT THE SUBMISSION OF THIS FORM TO THE CONTRACTING OFFICE FOR THE PUBLIC ENTITY IDENTIFIED IN PARAGRAPH 1 ABOVE IS FOR THE PUBLIC ENTITY ONLY AND THAT THIS FORM IS VALID THROUGH DECEMBER 31 OF THE CALENDAR YEAR IN WHICH IT IS FILED. I ALSO UNDERSTAND THAT I AM REQUIRED TO INFORM THE PUBLIC ENTITY PRIOR TO ENTERING INTO A CONTRACT IN EXCESS OF THE THRESHOLD AMOUNT PROVIDED IN SECTION 287.017, FLORIDA STATUTES, FOR CATEGORY TWO OF ANY CHANGE IN THE INFORMATION CONTAINED IN THIS FORM.

STATE OF FLORIDA
COUNTY OF _____

The foregoing instrument was sworn to (or affirmed), subscribed, and acknowledged before me **by means of ☐ physical presence or ☐ online notarization**, this _____ day of _____, 2026, by _____, who is personally known to me or has produced _____ as identification.

(SEAL)

_____
Notary Public – State of Florida

_____
(Print, Type, Stamp, or Commissioned Name of Notary Public)

VI. NON-COLLUSION AFFADAVIT

STATE OF _____

COUNTY OF _____

I state that I_____of_____,

(Name and Title) (Name of Firm)

am authorized to make this affidavit on behalf of my firm and its owner, directors and officers. I am the person responsible in my firm for the price(s) and amount(s) of this Response, and the preparation of the Response. I state that:

1. The price(s) and amount(s) of this Response have been arrived at independently and without consultation, communication or agreement with any other Provider, potential provider, Proposal, or potential Proposal.

2. Neither the price(s) nor the amount(s) of this Response, and neither the approximate price(s) nor approximate amount(s) of this Response, have been disclosed to any other firm or person who is a Provider, potential Provider, Proposal, or potential Proposal, and they will not be disclosed before Proposal opening.

3. No attempt has been made or will be made to induce any firm or persons to refrain from submitting a Response for this contract, or to submit a price(s) higher that the prices in this Response, or to submit any intentionally high or noncompetitive price(s) or other form of complementary Response.

4. The Response of my firm is made in good faith and not pursuant to any agreement or discussion with, or inducement from, any firm or person to submit a complementary or other noncompetitive Response.

5. _____, its affiliates, subsidiaries, officers, director, and employees (Name of Firm) are not currently under investigation, by any governmental agency and have not in the last three years been convicted or found liable for any act prohibited by State or Federal law in any jurisdiction, involving conspiracy or collusion with respect to Proposal, on any public contract, except as follows:

I state that I and the named firm understand and acknowledge that the above representations are material and important, and will be relied on by the State of Florida for which this Response is submitted. I understand and my firm understands that any misstatement in this affidavit is, and shall be treated as, fraudulent concealment from the State of Florida of the true facts relating to the submission of responses for this contract.

Name of Organization: _____

Signed By: _____

Print Name: _____

The foregoing instrument was sworn to (or affirmed), subscribed, and acknowledged before me **by means of ☐ physical presence or ☐ online notarization**, this ____ day of _____, 2026, by _____, who is personally known to me or has produced _____ as identification.

(SEAL)

_____
Notary Public – State of Florida

_____
(Print, Type, Stamp, or Commissioned
Name of Notary Public)

VII. SPECIFICATIONS

No additional information other than what has been provided under “Scope of Work"

EXHIBIT "C"

Vendor Bid/Proposal

(Place Vendor's Bid/Proposal Behind this Page)

Free Agent Marine LLC

Commercial Diving Services Proposal

Project: St. Pete Beach Commercial Diving Services 2026

Submitted By: Free Agent Marine LLC

Contact: Michael Cardona

Email: mike@freeagentmarine.com

Phone: (813) 400-1600

Submission Date: April 8, 2026

TABLE OF CONTENTS

- **Cover: p. 1**
- **TOC: p. 2**
- **Executive Summary / Execution Plan: pp. 3–5**
- **Qualifications: pp. 5–6**
- **References: p. 7**
- **Compliance narrative page: p. 8**
- **City RFB package begins: p. 9**
- **Signed/notarized Contractor's Bid Submittal: p. 11**
- **Bid Form / Pricing: p. 12**
- **City contract terms (insurance + E-Verify clauses are here): pp. 13–32**
- **Public Entity Criminal Affidavit: pp. 34–35**
- **Non-Collusion Affidavit: p. 36**
- **Insurance certificates: pp. 38–40**
- **W-9: p. 41 (instructions follow on pp. 42–46)**
- **E-Verify proof: p. 47**

EXECUTIVE SUMMARY

Free Agent Marine LLC is pleased to submit this proposal to provide on-call commercial diving services for the City of St. Pete Beach.

Our team specializes in municipal marine infrastructure support, including culvert inspection and cleaning, underwater inspection and documentation, dredging, and confined space diving operations. We bring direct, relevant experience from completed projects throughout the Tampa Bay area, including culvert inspection and cleaning operations along Bayshore and penetration dives within below-grade municipal systems extending several hundred feet.

Free Agent Marine operates with a fully equipped surface-supplied dive system and maintains the capability to rapidly mobilize via shore-based dive command center or vessel-based operations, depending on site conditions. Our approach prioritizes safety, efficiency, and clear coordination with City personnel to ensure reliable and consistent service delivery.

All operations are conducted in strict compliance with ADCI Commercial Diving Standards, OSHA regulations, and industry best practices.

Free Agent Marine LLC is fully prepared to support the City's ongoing and emergency diving needs with a responsive, experienced, and safety-focused team.

EXECUTION PLAN

Free Agent Marine LLC will provide on-call commercial diving services utilizing a fully equipped dive team operating from either a shore-based dive command center or a marine vessel, depending on site conditions and access requirements.

Asset Workflow and Cycle Reporting.
Free Agent Marine LLC will execute quarterly (or as-directed) maintenance cycles by mobilizing a three-person dive team to each outfall location, completing debris and marine growth removal, functional inspection of tide check valves and manatee grates, and documenting condition with timestamped video and stills. Where the City directs repair or replacement of in-line or outfall-end tidal check valves, our crew will support removal/installation activities, verify post-install function, and submit a per-asset written/video report identifying observed defects, corrective actions performed, and recommendations for follow-on maintenance.

All operations will be executed in accordance with:

- ADCI Commercial Diving Standards
- OSHA regulations (29 CFR Part 1910 Subpart T)
- Industry best practices for municipal marine infrastructure

Our operational approach is built to ensure safe execution, efficient production, and clear coordination with City personnel.

Dive System & Equipment Configuration

Free Agent Marine will deploy a complete surface-supplied shallow water dive spread, including:

Air Supply System

- Diesel-powered air compressor (325 CFM) and/or high-pressure air bank
- Gasoline-powered air compressor (255 CFM) and/or high-pressure air bank
- High-pressure air cylinders (backup supply)
- 30-gallon volume tank
- High-pressure micro-particle filtration system with backup filters

Dive Umbilical & Communication

- Dual dive umbilicals with integrated strength member, hardline communications, and pneumofathometer
- Air manifold control system with interconnects
- Surface-to-diver communication systems (radio/intercom)

Support Equipment

- Dive ladder for safe access
- Full shallow water spares package
- Free Agent Marine safety manual and decompression tables
- OSHA-compliant first aid kit

Inspection, Cleaning & Work Capabilities

Free Agent Marine is equipped to perform inspection, cleaning, and maintenance operations including:

- Underwater video inspection with live feed capability
- High-output lighting for low-visibility environments
- 4,000 PSI hydro blasting for marine growth removal
- Pressure washing systems with specialty nozzles
- Submersible dredge/pump for sediment and debris removal

Documentation & Deliverables

Free Agent Marine will provide structured reporting to support City operations and engineering review, including:

- Real-time video monitoring when required
- Post-operation video and audio reports
- USB-based deliverables
- Optional still photo documentation

Operational Flexibility

Free Agent Marine's crew and equipment allow rapid adaptation to:

- Confined culvert environments
- Open water structures
- Sediment-heavy conditions
- Restricted or limited-access locations

Mobilization method (shore or vessel-based) will be selected to maximize efficiency, safety, and production output.

Safety & Supervision

All diving operations will be performed under strict safety protocols, including:

- ADCI Commercial Diving Standards
- OSHA compliance requirements
- Continuous surface-supplied air with full communication
- Designated dive supervisor present at all times

QUALIFICATIONS & EXPERIENCE

Relevant Experience

Free Agent Marine LLC has successfully performed commercial diving operations directly aligned with the requirements of this contract, including:

- Inspection and cleaning of culvert systems along Bayshore in the Tampa Bay area
- Removal of marine growth, sediment, and debris from drainage and water conveyance systems
- Underwater inspections with video documentation to support engineering evaluation and maintenance planning

Free Agent Marine has also performed penetration diving operations in confined and below-grade environments throughout the City of Tampa, including subsurface culvert and tunnel systems extending several hundred feet. These operations were conducted in low-visibility and restricted-access conditions, requiring advanced planning, continuous communication, and strict safety control.

Additional relevant project experience includes:

- Diver-assisted dredging and sediment removal
- Clearing waterways and obstructions beneath bridge structures
- Underwater burning and structural debris removal
- Confined space dredging and cleaning within vessels and semi-submersibles

- Marine growth removal in restricted and hazardous environments

Company Capabilities

Free Agent Marine LLC is a Florida-based commercial diving contractor specializing in underwater inspection, maintenance, dredging support, and marine construction operations.

Core service capabilities include:

- Culvert inspection and cleaning
- Underwater video documentation and reporting
- Diver-assisted dredging and debris removal
- Underwater burning and structural demolition
- Confined space and penetration diving operations

Typical project values range from $2,500 to $10,000+ per day, depending on scope, complexity, and duration.

Personnel Experience

Free Agent Marine personnel are trained and experienced in:

- Surface-supplied air diving systems
- Confined space and penetration diving
- Underwater inspection, documentation, and reporting
- Dredging and debris removal operations

Personnel experience includes municipal infrastructure work, marine construction support, and operations in confined and limited-access environments.

Claims, Litigation & Standing

- No unresolved claims exceeding $500,000
- No material litigation impacting operations within the past five (5) years
- Company is in good standing and fully capable of contract performance

PROJECT REFERENCES

Free Agent Marine LLC provides the following professional references for similar commercial diving services performed within the past five (5) years:

Reference 1

Organization: Kimmins
Contact: Matt Gilbert
Phone: 813-248-3878
Email: Mgilbert@kimmins.com
Project Location: City of Tampa, FL (Bayshore Area)
Date: 04/06/2026

Scope:
Performed culvert inspection and cleaning operations along Bayshore in the Tampa Bay area. Work included penetration dives within below-grade municipal systems spanning several hundred feet, inspection of confined culverts and drainage structures under low-visibility conditions, underwater video documentation, and removal of marine growth for municipal maintenance.

Reference 2

Organization: Pro Shot Concrete
Contact: Joshua Morris
Phone: 256-762-0035
Email: jmorris@proshotconcrete.com
Project Location: Tampa, FL (Westshore Bridge)
Date: 03/01/2025

Scope:
Performed diver-assisted dredging to expose sheet pile wall, underwater burning, and debris removal operations beneath bridge structures.

Reference 3

Organization: Bosarge Diving
Contact: Brandon Bosarge
Phone: 228-762-6361
Email: Office@bosargediving.com
Project Location: Pascagoula, MS
Date: 03/02/2021

Scope:
Conducted confined space penetration diving inside semi-submersible vessels, utilizing high-pressure hydro blasting and dredging to clean and restore sea chest systems.

COMPLIANCE DOCUMENTS

Free Agent Marine LLC has reviewed all bid requirements and confirms that all required compliance documentation has been completed and included with this submission.

Included Documents

- Completed Bid Form
- Pricing Sheet
- Addenda Acknowledgment
- Certificate of Insurance
- W-9 Form
- References & Qualifications
- Execution Plan
- Required Affidavits
- E-Verify Compliance Documentation

Insurance Compliance

Free Agent Marine maintains insurance coverage meeting or exceeding all contract requirements, including:

- Commercial General Liability
- Automobile Liability
- Workers' Compensation
- USL&H Coverage
- Maritime Employers Liability

A Certificate of Insurance is included listing:

- City of St. Pete Beach as Certificate Holder
- City of St. Pete Beach as Additional Insured

Regulatory Compliance

Free Agent Marine LLC certifies:

- Compliance with all federal, state, and local regulations
- Adherence to OSHA and ADCI standards
- Proper licensing for all work performed

Submission Integrity

Free Agent Marine LLC affirms that all information provided is accurate and complete. The company understands that incomplete submissions may result in disqualification.



City of St Pete Beach
Request for Bid

Commercial Diving Services

Bids due on or before
04/08/2026 at 9:00 AM
EST(Deadline) Electronically Via Bonfire Only

Table of Contents

I. CONTRACTOR'S BID SUBMITTAL 3
II. BID FORM 4
III. GENERAL CONTRACT TERMS ..... 5 IV. REFERENCES & MINIMUM QUALIFICATIONS 25
V. PUBLIC ENTITY CRIMINAL AFFIDAVIT 26
VI. NON-COLLUSION AFFADAVIT 28
VII. SPECIFICATIONS 29

Event	Date	Time
Publication of Bid	03/11/2026	8:00 AM
Pre-Bid Meeting	03/18/2026	9:30 AM
Deadline for Question Submission	03/25/2026	10:00 AM
Bid Receiving Deadline	04/08/2026	9:00 AM
Bid Opening	04/08/2026	9:30 AM

I. CONTRACTOR'S BID SUBMITTAL

The company that is submitting a bid declares that it has extensive experience in **Commercial Diving Services.**

The undersigned, as Bidder, hereby declares that the only person or persons interested in the Bid as principal or principals are named herein, and that no person other than herein mentioned has any interest in the Bid or in the Agreement to be entered into; that this Bid or Agreement is made without connection with any other person, company, or parties making a Bid; and that it is in all respects fair and in good faith without collusion or fraud.

The Bidder further declares that they have examined the site of the work and informed themselves fully in regard to all conditions pertaining to the place where the work is to be done; that they have examined the Plans and Specifications for the work and Contract Documents relative thereto, and have read all special provisions furnished prior to the opening of bids; and that they have satisfied themselves relative to the materials to be supplied and work to be performed.

The Bidder proposes and agrees, if the Bid is accepted, to contract with the City of St. Pete Beach, Florida, in the form of an Agreement specified for **"Commercial Diving Services"** in St. Pete Beach, Florida, in full and complete accordance with the shown, noted, described, and reasonably intended requirements of the Plans, Specifications, and Contract Documents, to the full and entire satisfaction of the City of St. Pete Beach, Florida.

The successful bidder shall be required to utilize the template Agreement in this Request for Bids (RFB) and any questions regarding the Agreement must be addressed during the RFB process before submittal. The City reserves the right to respond or not respond to questions in the form of an addendum.

The Bidder proposes to furnish all materials, equipment, labor, and perform the work submitted in their bid schedule for the City of St. Pete Beach **" Commercial Diving Services".**

COMPANY: Free Agent Marine LLC DATE: 04/07/2026

ADDRESS: 4807 Londonderry Drive PHONE: (813) 400-1600
Tampa FL, 33647

BIDDER: [signature] NAME: Michael Cardona Jr, Owner
(SIGNATURE) (PRINT NAME & TITLE)

STATE OF FLORIDA
COUNTY OF Pasco

The foregoing instrument was sworn to (or affirmed), subscribed, and acknowledged before me **by means of ☒ physical presence or ☐ online notarization**, this 7 day of April, 2026, by Mike Cardona, who is personally known to me or has produced Drivers License as identification.

(SEAL)

[signature]
Notary Public – State of Florida

BRIAN WATSON
MY COMMISSION # HH661449
EXPIRES: April 07, 2029

Brian Watson
(Print, Type, Stamp, or Commissioned Name of Notary Public)

SUBMIT BID TO:

Electronically via Bonfire Only

Bid Form

Pay Item	Description	Quantity	Unit	Unit Cost	Total Cost
Diver Team Labor					
	Three (3) Man Dive Team, Scheduled	40	Hour	$300.00	$ 12,000.00 -
	Three (3) Man Dive Team, Overtime	20	Hour	$350.00	$ 7,000.00 -
	Three (3) Man Dive Team, Unscheduled	40	Hour	$340.00	$ 13,600.00 -
	Additional Diver	8	Hour	$85.00	$ 680.00 -
	Additional Diver, Overtime	8	Hour	$120.00	$ 960.00 -
	Additional Diver, Unscheduled	8	Hour	$110.00	$ 880.00 -
	Written & Photo/Video Reports or Specialized Paperwork	10	Hour	$60.00	$ 600.00 -
	Emergency Call-Out Fee	1	Each	$500.00	$ 500.00 -
				Subtotal	**$ 36,220.00 -**
Mobilization Rate, Per Occurrence					
	Mobilization Fee	5	Each	$500.00	$2,500.00 -
	Demobilization Fee	5	Each	$500.00	$2,500.00 -
	Subtotal				**$5,000.00 -**
Equipment					
	Work Boat / Barge	20	Day	$200.00	$4,000.00 -
	Hydraulic Unit	20	Day	$140.00	$2,800.00 -
	4-inch Hydraulic Submersible Pump	20	Day	$135.00	$2,700.00 -
	Jet Pump	20	Day	$125.00	$2,500.00 -
	4,000 PSI Water Blaster	20	Day	$30.00	$600.00 -
	Digital Underwater Camera	20	Day	$50.00	$1,000.00 -
	Underwater Video with Digital Capture	20	Day	$50.00	$1,000.00 -
	Fuel Charge	20	Day	$100.00	$2,000.00 -
	Small Pneumatic Tool	20	Day	$20.00	$400.00 -
	Shallow Water Dive Package	20	Day	$225.00	$4,500.00 -
	Additional Equipment (Cost plus 15%)	1	LS	Cost + 15%	
	Subtotal **$21,500.00**				-
Materials					
	Additional Materials (Cost plus 15%)	1	LS	Cost + 15%	
	TOTAL				**$62,720.00 -**

** Scheduled labor is six (6) hour minimum onsite. Overtime is after eight (8) hours including nights, weekends, and holidays.*

4 v020222

GENERAL CONTRACT TERMS

REQUEST FOR BID

The City of St. Pete Beach is submitting this RFB for bids on the Commercial Diving Services.

LOCATIONS

The City of St. Pete Beach is soliciting bids from qualified Commercial Diving Services for the City.

BID SUBMITTALS

Bid documents must include a signed/notarized Contractor's Bid Submittal, Bid Form, References, Contractor's license and insurance certificates, and Public Entity Criminal Affidavit. The Contractor shall submit one electronic bid via Bonfire.

BIDDER INFORMATION

The City is not responsible for any Addendums or other supplementary information that is not received due to non-submittal of the aforementioned information. Please refer back to the city website (http:// www.stpetebeach.org/news-and-links/city-projects.html) for additional project information as it becomes available. The City reserves the right to decide whether to answer addendums or not. The City is not required to provide any additional information.

PRE-BID MEETING

An optional pre-bid meeting will be held on **03/18/2026 at 9:30 AM EST** via Microsoft Teams Video conference/Teleconference. Please contact the City's Procurement Manager (purchasing@stpetebeach.org) for a meeting invitation and Microsoft Teams Meeting instructions.

WRITTEN REQUESTS FOR INTERPRETATIONS/CLARIFICATIONS

No oral interpretations will be made to any firms as to the meaning of the scope of work or any other contract documents included in this **RFB.** All questions pertaining to the terms and conditions or scope of work of this Request for Bid **(RFB)** must be sent in writing only via email to the City Procurement Manager (purchasing@stpetebeach.org) and shall be received no later than **10:00 EST on 03/25/2026**. Responses to questions may be handled as an Addendum if the response would provide clarification to the requirements of the **RFB**. All such Addenda shall become a part of the contract documents. The City will not be responsible for any other explanation or interpretation of the proposed **RFB** made or given prior to the award of the contract. The City will not respond to questions received after the specified deadline. The City reserves the right to respond to any and all questions but is not required to do so.

BID PACKAGES

Sealed bids will be accepted by the City until **04/08/2026** at **9:00 AM** EST (Deadline). No bids shall be accepted by the City after this deadline – NO EXCEPTIONS. Bid Packages must be electronically submitted via Bonfire Clearly marked as: "**Commercial Dive Services**." If a link is needed for either site, please contact the Procurement Manager (purchasing@stpetebeach.org.) All Bidders are invited to attend this bid opening.

CONTACT INFORMATION

Sara Spain – Procurement Manager
Mailing Address - 155 Corey Avenue, St. Pete Beach, Florida 33706
E-mail - purchasing@stpetebeach.org

SCOPE OF WORK

The City of St. Pete Beach is seeking a qualified full service commercial diving Contractor with experience in a wide range of applications. The Contractor shall provide a qualified dive team, and all related diving equipment required to assist the City of St. Pete Beach with the cleaning, inspection, repair and maintenance of tide check valves, stormwater outfalls, manatee grates, subaqueous pipelines, piers, piles, and bulkheads.

The City of St. Pete Beach has 35 tide check valves, and 25 manatee grates installed at stormwater outfalls throughout the City. Services shall include:

- Debris Removal from Valve, Pipe, Endwalls, and Pit
- Marine Growth Removal from Valve, Pipe, Endwalls, and Pit
- Maintenance of Manatee Grates, when present
- Written and Video Reports of condition per cycle
- Repair and Replacement of in-line and outfall-end type Tidal Check Valves
- Hydraulic Dredging

Services must comply with relevant standards and regulations, including OSHA diving regulations and any applicable environmental guidelines.

CONTRACTOR TO FURNISH

- A Qualified Dive Team
- All Related Diving Equipment
- Underwater Video with Digital Capture
- Shallow Water Dive Package
- Small Pneumatic Tool
- Work Boat / Barge
- Hydraulic Unit
- 4-inch Hydraulic Submersible Pump
- Jet Pump
- 4000 PSI Water Blaster
- Digital Camera

THE CITY OF ST. PETE BEACH TO FURNISH

- A Representative to Coordinate Activities
- A Representative to View Video Real Time and Direct the Crew
- Access to Work Site
- Permits (If required)
- Assist with Lock-Out Tag-Out procedures (training or supervision as needed)
- Procurement of Tidal Check Valves (as needed)

SCHEDULE

Maintenance, cleaning and inspection shall be scheduled per occurrence and may include the full asset inventory or a portion of that inventory for each cycle. Maintenance cycles are to be performed quarterly, or more frequently as-needed, based on City requirements.

Tidal check valve, manatee grate, and other miscellaneous outfall repairs shall be scheduled per occurrence, as-needed.

The Contractor must provide at least 72 hours' notice for scheduling changes. Emergency response for unscheduled maintenance requests must be available within 24 hours.

PERFORMANCE METRICS

The following performance metrics will be used to evaluate the Contractor's work:

- Timeliness of completing tasks as per the agreed schedule.
- Accuracy and thoroughness of written condition reports.
- Compliance with safety standards and regulations.
- Responsiveness to unscheduled maintenance requests.

All reports must be submitted in a digital format (PDF or Word) within ten (10) days of completing each maintenance cycle. Reports should include:

- Detailed descriptions of completed tasks.
- Photographic and video evidence.
- Identified issues and recommendations for future maintenance.

PENALTIES

Failure to adhere to the schedule or meet performance standards may result in penalties, including:

- 5% reduction in payment for delayed work (per day).
- Rework at Contractor's expense for substandard services.

EMERGENCY SERVICES

The Contractor must provide emergency maintenance services within 24 hours of the City's request. The bid form includes an emergency call-out fee to account for this service.

Once a contract is awarded, the selected vendor will be required to submit a detailed fee schedule outlining the main pay items for the project. This fee schedule will be reviewed at the pre-construction meeting and will be used to review pay applications and evaluate project progress.

DETAILED SPECIFICATIONS

LOCATIONS

The locations will cover all tide check valves, stormwater outfalls, manatee grates, subaqueous pipelines, piers, piles, and bulkheads Citywide that are City owned throughout the City of St. Pete Beach Florida.

Standard work hours shall be from 7:30 AM until 6:00 PM, Monday through Saturday. No work shall take place on Sundays or on official City holidays without prior approval by the City Manager or designee at least 1 week prior to the scheduled work. A list of current official City holidays can be found on the City's Human Resources website at http://www.stpetebeach.org/hr/holidays.html.

Contractor will coordinate scheduling of work with the City's Project Manager and City's Inspector.

ADDITIONAL WORK DETAILS

Contractors or persons wishing to bid on this project are licensed, bondable and insured in accordance to the City's requirements. The Contractor will furnish all necessary labor, materials, tools, equipment and supplies to complete the scope of work. Bid must also include all costs for licenses, permits, and any material disposal fees.

Bidders shall bring questions, discrepancies, omissions, conflicts or doubt as to meaning of any part of Contract Documents to the attention of the City of St Pete Beach Procurement Manager at least ten (10) business days before bid submittal deadline. Clarification of intent of Contract Documents, if necessary, shall be made available to bidders in the form of an Addendum. Failure to request clarification of interpretation of Contract Documents shall not relieve bidders of their responsibilities to perform the work.

The City of St. Pete Beach reserves the right to reject any or all bids or parts of bids, or accept any bid or part thereof deemed to be in the best interests to the City of St. Pete Beach.

STATEMENT OF WORK

The Contractor shall furnish and pay the cost, including sales tax and all other applicable taxes, licenses, permits and fees, of all the necessary materials not furnished by the City and shall furnish and pay for all the superintendence, labor, tools, equipment, transportation, and perform all the work required for the execution of all services listed in the Bidder's Proposal and Bid Form attached hereto and in strict accordance with the Plans, Specifications, and requirements of the City of St. Pete Beach which are attached hereto and made a part hereof, and any amendments thereto and such supplemental Plans and Specifications which may hereafter be approved.

BEGINNING DATE

The Contractor shall, within ten (10) business days after receipt of the Notice of Award and before commencement of any operations hereunder, execute the Agreement. Additionally, the Contractor shall, within twenty (20) business days after receipt of the Notice of Award, provide all required documentation to the City. The Contractor must commence construction activities within thirty (30) business days of NTP to prepare and procure materials. Any change to the start date or the work schedule included with this bid must be submitted in writing to and approved by the City Manager or designee.

COMPLETION OF WORK

The work will be completed on an as-needed basis. Each location that needs to be surveyed, repaired and/or worked on will constitute it's own "job". The contract will be for (3) three years from time of execution (Date of last signature) of the contract with (2) additional (1) one year extensions if agreed upon by the City and vendor. .

EXAMINATION OF SITE

Bidders may visit specific areas with advanced notice.

ASSURANCES

The responding Contractor shall provide a statement of assurance that the Contractor is not presently in violation of any statutes or regulatory rules that might have an impact on the firm's operations. All applicable laws and regulations of the State of Florida, and ordinances and regulations of the City of St. Pete Beach will apply.

TRAFFIC CONTROL AND STAGING AREA

Contractor shall include all costs associated with vehicular and pedestrian traffic control and maintenance during the project. Contractor shall be responsible for providing a staging area. The location of this area must be approved by the City Manager or designee. The Contractor will be required to control the area including any additional fencing or barricades and Contractor will be responsible for the restoration of this and all other staging areas provided by the City.

ASSIGNMENT AND TRANSFER OF CONTRACT

The Contractor shall not assign or transfer this Agreement or any part thereof or any interest therein without consent in writing of the City and the Contractor's Surety, and any such assignment or transfer without such written consent shall be null and void.

SUBCONTRACTS

The Contractor shall not subcontract this Agreement or any part thereof or any interest therein without consent in writing of the City and the Contractor's Surety. Any Subcontractor approved by the City will be subject to the same standards and qualifications as stated in this Contract.

PERFORMANCE PAYMENT BOND

Not required for this contract.

LIQUIDATED DAMAGES

If the work embraced by this Contract is not completed on or before the date set for completion or any extension thereof, the actual damages for the delay will be impossible to determine and in lieu thereof, the Contractor shall pay to the City fixed, agreed, and liquidated damages in the amount of either Five-Hundred Dollars ($500) per day for each calendar day of delay until the work is satisfactorily completed.

PAYMENT

Payment shall be made to the Contractor for work performed under this Contract for the quantities of work as determined in accordance with Payments for Work Completed and Payments Withheld of this Contract. Payment for extra work will be made in accordance with the Changes in Work, Contract Amount, and Contract Time sections below.

CHANGES IN THE WORK

Without invalidating the Contract, the City may, at any time or from time to time, order additions, deletions or revisions in the work authorized by written Change Orders or directives. Upon receipt of a Change Order, the Contractor will proceed with the work involved. All such work shall be executed under the applicable conditions of the Contract documents. If any Change Order causes an increase or decrease in the Contract Amount or any extension or shortening of the Contract Time, an equitable adjustment will be made.

Additional Work performed by the Contractor without authorization of a Change Order will not entitle them to an increase in the Contract Amount or any extension of the Contract Time, except in the case of an emergency (subject to approval by City Manager or designee).

It is the Contractor's responsibility to notify their Surety of any changes affecting the general scope of the Work or change of the Contract Amount and the amount of the applicable bonds shall be adjusted accordingly, and an amended bond document furnished to the City. In the event the City directs the Contractor to make a change in the Work, and if the City and the Contractor do not arrive at a mutually acceptable increase or decrease in the Contract Amount, the contractor shall not use any such lack of mutual acceptance as a basis or cause to stop or otherwise delay the progress or the execution and completion of any of the work ordered, directed or required pursuant to the Contract Documents.

If the Contractor believes an event or situation has occurred which justifies a change in the Contract Amount or Contract Time, he shall deliver a written notice to the City Manager or designee. Each such written notice shall be delivered promptly and no later than fifteen (15) business days after the Contractor first discovered the occurrence. The Contractor shall be deemed to have waived the right to collect any and all costs incurred more than fifteen (15) business days prior to the date of delivery of the written notice and shall be deemed to have waived the right to seek an extension of the Contract Time with respect to any delay in the Progress Schedule which accrued more than fifteen (15) business days prior to the date of delivery of the written notice.

Any such notice shall include sufficient detail to explain the basis of entitlement to a claim for an adjustment to the Contract Amount of Contract Time. When requested by the City Manager or designee, the Contractor shall furnish any additional information and details as may be required to determine the facts or allegations involved, which shall be provided within fifteen (15) business days of the request unless a longer time period is allowed by the City Manager or designee.

The Contractor shall prepare bids detailing proposed adjustments to Contract Amount and/or Contract Time and submit them to the City Manager or designee within fifteen (15) business days of the City's issuance of a proposed Change Order or the Contractor's submitting a written notice of a change or claim for an adjustment to the Contract Amount or Contract Time. Contractor's bids shall be irrevocable for a period of at least sixty (60) business days after receipt by the City. Any delay in the submittal of a complete, adequate and acceptable bid will not justify an increase in Contract Amount or Contract Time. Contractor agrees that it shall give the City access to any and all of Contractor's and Subcontractors' books, records and other materials relating to proposed Change Orders and other claims for adjustment to Contract Amount or Contract Time.

CHANGE OF CONTRACT AMOUNT

The Contract Amount constitutes the total compensation payable to the Contractor for performing the Work. All duties, responsibilities and obligations assigned to or undertaken by the Contractor shall be at his expense without change in the Contract Amount. The Contract Amount may only be changed by written Change Order issued by the City. Any claim for an increase in the Contract Amount shall be in writing and delivered to the City Manager or designee within fifteen (15) business days of the occurrence of the event giving rise to the claim.

All claims for adjustment in the Contract Amount shall be determined by the City Manager or designee. However, no claim for an adjustment to the Contract Amount will be considered for unforeseeable causes that were beyond the fault or negligence of the Contractor or his Subcontractors or supplier such as acts of God, floods, riots, etc. This restriction does not restrict

submission of claims for additional Contract Time due to events of this nature. Any change in the Contract Amount shall be incorporated in a Change Order.

Contractor bids or claims shall cover all aspects of the Work involved and shall be fully documented and itemized as to all costs, quantities and charges for overhead and profit. Amounts for Subcontractors or Suppliers at any tier shall be similarly supported. When determining Subcontractors' costs, the methods to be used shall be those used for the Contractor's costs, except that the term "Subcontractor" shall replace the term "Contractor," context permitting.

Changes in Contract Amount for extensions in Contract Time shall exclude costs that are unaffected or do not relate to the extension in Contract Time, such as: (a) operating costs of construction equipment assigned to the Work on a continuing basis, (b) operating costs and owned/rental costs of construction equipment (crane used for specific lifts, concrete pump used for specific pours, etc.), and (c) fully paid site facilities, tools, etc.

The value of any Work covered by a Change Order or of any claim for an increase or decrease in the Contract Amount where the Work involved is covered by unit prices contained in the Contract Documents shall be determined by application of unit prices to the quantities of the items involved. If the quantities originally contemplated are so changed in a proposed Change Order, that application of the Unit Prices to the quantities proposed will cause substantial inequity to the City or the Contractor, the applicable unit price(s) shall be equitably adjusted by mutual agreement.

If the value of work covered by a Change Order cannot be established or mutually agreed to utilizing previously established unit rates, the value shall be determined by the City on the basis of an estimate of the out-of-pocket cost and percentages that are acceptable to the City for overhead and profit. The out-ofpocket cost shall only include those direct costs which are needed to perform the work such as labor (including payroll taxes, fringe benefits, labor burden and workers' insurance), materials, equipment, and other incidental out-of-pocket construction costs directly involved in the work, including but not limited to small tools, expendables and material costs but shall not include project management or project supervisory costs unless the Change Order includes an increase in the Contract time.

In such case, the Contractor will submit in the form prescribed by the City an itemized cost breakdown together with supporting data.

The amount of credit to be allowed by the Contractor to the City for any such change which results in a net decrease in cost, will be the amount of the actual net decrease as determined by the City. When both additions and credits are involved in any one change, the combined overhead and profit shall be figured on the basis of the net increase, if any.

To be eligible for consideration, the Contractor's written claim for a change in the Contract price, including claim(s) from sub-contractors, shall include an itemized cost breakdown with supporting data as described below:

A. <u>For labor</u>: Provide written documentation from the Contractor and Subcontractors or others as appropriate in the form of a detailed breakdown by each labor classification involved indicating the number of hours of Work involved and the hourly payroll rate applicable to each to substantiate the basis and amount of the direct labor cost. The direct labor cost may be increased to provide an allowance for indirect payroll costs (labor burden), such as payroll taxes, fringe benefits, and workers insurance after all premium discounts, rebates and other appropriate reductions have been taken.

B. For material, supplies, equipment, furnishings, etc., to be installed or included in the Work: Provide written documentation from the Contractor and Subcontractors, suppliers, etc., to substantiate the basis and amount of the various cost items involved. Material costs shall reflect the Contractor's reasonably anticipated net actual cost after consideration of trade discounts and volume rebates.

C. For construction equipment: Provide written documentation in the form of a detailed breakdown by each construction equipment category, indicating the applicable unit rates (i.e., dollar amount per hour, dollar amount per day etc.,) and the number of hours, days, etc. to substantiate the basis and amount of the construction equipment out-of-pocket costs.

CHANGE OF CONTRACT TIME

The Contract Time may only be changed by written Change Order. Any claim for an extension in the Contract Time shall be in writing and include an analysis of the Progress Schedule as further described in the Specifications and shall be delivered to the City Manager or designee within fifteen (15) business days of the occurrence of the event giving rise to the claim. All claims for adjustment in the Contract Time shall be determined by the City Manager or designee. Any change in the Contract Time resulting from any such claim shall be incorporated in a Change Order. The Contract Time may be extended for an amount equal to time lost due to unforeseeable causes beyond the control of the Contractor (and his Subcontractors and Suppliers) if he makes a claim therefrom. Such delays shall include, but not be restricted to, acts or neglect by any separate Contractor employed by the City; fires; floods; labor disputes; epidemics; or acts of God.

All time limits stated in the Contract Documents are of the essence to the Contract. The stated time limits are agreed to be adequate to complete the work, including the procurement, manufacture and delivery of all material and equipment required, and account for any and all potential impact, delays, disruptions and costs that may be expected.

CITY'S RIGHT TO DIRECT PURCHASE

The City has reserved the right to purchase certain items and materials for this project directly in an effort to save applicable sales tax in compliance with Florida Law.

The City will issue purchase orders directly to the vendors supplying the equipment being directly purchased by the City for this project. Each Purchase Order will be accompanied by the City's Certificate of Exemption and a Certificate of Entitlement. All direct purchase vendor invoices will be issued to the City of St. Pete Beach, and the City will issue payment to each direct purchase vendor from City funds. The City will take title to the equipment at time of delivery from the vendor and will issue a separate Certificate of Entitlement for each purchase order.

The Contractor shall assist the City with receipt of materials furnished by the City in accordance with these
Special Provisions including, but not limited to, verifying correct quantities, verifying documents of orders in a timely manner, providing and obtaining all warranties and guarantees required by the Contract Documents, assist with inspection of the goods at the time of delivery and notify the City immediately of any deficiencies noted. It is understood that the owner assumes the risk of damage or loss during the time that the building materials are physically stored at the job site prior to their installation or incorporation into the project. The Contractor shall coordinate with the City regarding the delivery schedules, sequence of delivery, loading orientation, and other arrangements normally required by the Contractor for the particular material furnished.

As City Furnished Materials are delivered to the job site and accepted by the City, the City shall notify the
Contractor who will assist the City to visually inspect all shipments from the suppliers. The City will approve the vendor's invoice for material delivered upon adequate inspection and recommendation of the Contractor. The City shall assure that each delivery of City Furnished Materials is accompanied by documentation adequate to identify the Purchase Order against which the purchase is made and Contract Documents including but not limited to Contract, Plans, Specifications, and approved Shop Drawings. This documentation may consist of a delivery ticket, bill of lading and an invoice from the supplier conforming to the Purchase Order together with such additional information as the City may deem necessary.

PAYMENTS FOR WORK COMPLETED

Partial payments will be made as the work progresses (if applicable) at the end of each calendar month, or as soon thereafter as practicable on estimates made by the City Manager or designee and as approved by the City, provided that the Contractor is performing the overall job in a diligent manner. In making partial payments, there shall be retained five percent (5%) on the amount of each estimate until final completion and acceptance of all work covered by the Contract. Upon completion and acceptance of the work, the City Manager or designee shall issue a certificate that the work has been completed and accepted by them under the conditions of the Contract and shall make and approve the final estimate of the work. The entire balance found to be due the Contractor, including that retained by the City, should be paid to the Contractor. Such payment shall be conditioned, however, upon the submission by the Contractor of evidence satisfactory to the City that all claims for labor, material, and any other outstanding indebtedness in connection with the Contract have been paid. Such payment shall also be conditioned upon approval and acceptance of the construction and improvements by the City.

If after the work has been substantially completed, full completion thereof is materially delayed through no fault of the Contractor and the City Manager or designee so certifies, the City shall upon the Certificate of the City Manager or designee, and without terminating the Contract make payment for the balance due for that portion of the work fully completed and accepted. Such payment shall be made under the terms and conditions governing final payment, except that it shall not constitute a waiver of claim. If such delay occurs and payment is made under this clause, the Contractor shall nevertheless be prepared to complete the work in a timely manner upon the remedy or removal of such delay, and shall be bound under this Contract for the completion of such work unless this Contract is otherwise terminated. All payments will be made in accordance with the Local Government Prompt Payment Act, Chapter 218, Florida Statutes.

PAYMENTS WITHHELD

The City Manager or designee may withhold, or, on account of subsequently discovered evidence, nullify the whole or part of any estimate to such extent as may be necessary to protect the City from loss on account of:

a) Defective work not remedied

b) Claims and/or liens filed or reasonable evidence indicating probable filing of claims

c) Failure of the Contractor to make payments properly to Subcontractors or for material or labor

d) A reasonable doubt that the Contract can be completed for the balance then unpaid

e) Damage to another Contractor

f) Failure of the Contractor to keep their work progressing in accordance with their time schedule

FINAL PAYMENTS

Upon the completion and acceptance of the work, the City Manager or designee shall issue a certificate that designates that the whole work provided for in this Contract has been completed and accepted by him under the conditions and the terms thereof and shall make the final estimate of the work. After issuance of the certificate, the entire balance found to be due the Contractor, including said retained percentage by the City in accordance with existing state laws as may be retained lawfully by said City, shall pay excepting such sums to the Contractor.

Before the approval of the final payment, the Contractor shall submit evidence satisfactory to the City that states that all payrolls, materials, bills and outstanding indebtedness in connection with this Contract have been paid.

LIENS

If at any time there shall be evidence of any lien or claim for which the City might become liable and which is chargeable to the Contractor, the City shall have the right to retain out of any payment then due or thereafter to become due, an amount sufficient for complete indemnification against such lien or claim. In the event the City has already paid to the Contractor all sums due under this contract or the balance remaining unpaid is insufficient to protect the City, the Contractor and his Surety shall be liable to the City for any loss so sustained.

RESPONSIBILITY OF THE CITY MANAGER OR DESIGNEE

The term "City Manager or designee" wherever used in the Contract shall be the City of St. Pete Beach or its duly authorized representative. Notices of any change in the City Manager or designee shall be given in writing by the City to the Contractor. The City Manager or designee shall have full authority to interpret the Plans and Specifications and shall determine the amount, quality, and acceptance of the work and supplies to be paid for under the Contract and every question relative to the fulfillment of the terms and provisions therein. It shall be the duty of the City Manager or designee to enforce the Plans and Specifications in a fair and unbiased manner. If a variation from any requirements is allowed the City
Manager or designee shall grant the same in writing with the reasons for his action outlined, and such action will not invalidate or change the Contract in any other manner.

INTENT OF PLANS AND SPECIFICATIONS

The Contractor shall keep on the job a copy of the Plans and Specifications and shall at any time give the City Manager or designee access thereto. Anything mentioned in the Specifications and not shown on the Plans or shown on the Plans and not mentioned in the Specifications, shall be of like effect as if shown or mentioned in both. The Contractor shall not take advantage of any errors, discrepancies or omissions that may exist in the Plans and Specifications but shall immediately call them to the attention of the City Manager or designee whose interpretation or correction thereof shall be conclusive. Should a conflict occur between the General Specifications and any Supplemental Specifications and/or Plans, the latter shall govern.

LICENSES AND PERMITS

The Contractor shall obtain and pay for all necessary City licenses and work permits and shall faithfully comply with all laws, ordinances and regulations, (Federal, State or local) which may be applicable to the operations to be conducted hereunder, except for those permits obtained by the City. Notwithstanding the provisions above, the contractor is responsible for non-compliance of all permit requirements, including all fines resulting from Contractor's non-compliance of said requirements.

Chapter II, Section II-4, "Registration of Licenses Obtained From Other Municipalities:" "Persons, partnerships, corporations, or other business entities doing business with the City who are not required to obtain a City occupational license, but who must have either a State or County or Municipal occupational license from another municipality, shall register such occupational license with St. Pete Beach Community Development Department. The City may charge a fee for such registration." The Contractor shall be responsible for obtaining all City, County, State and Federal permits required by those government agencies and must provide documentation of receipt of those permits prior to project commencement. This shall include a notice to commence work letter and the applicable fee, if required. Any sub-contractor hired by the contractor awarded the project, MUST also register their license with the City.

SUPERINTENDENCE

The Contractor shall constantly superintend all the work embraced in this Contract in person or by a responsible agent who shall have in writing, full authority to act for them and to carry out all the instructions given by the City Manager or designee.

LABOR PROVISIONS

The Contractor and his Subcontractors shall discharge, whenever ordered to do so by the City Manager or designee, any employee who is disorderly or whose conduct in the opinion of the City Manager or designee is detrimental to the prosecution of the work. No person whose age or physical condition is such as to make this employment dangerous to his/her health and safety or to the health and safety of others shall be employed on the work, and in no event shall any persons under the age of sixteen (16) years be employed.

INSURANCE

The Contractor shall procure and maintain at his/her own expense, during the life of the Contract, liability insurance as hereinafter specified. All such insurance shall be subject to the approval of the City for adequacy of protection and shall include a provision preventing cancellation without twenty (20) business days prior notice to the City in writing. The City shall be included as an additional insured on all liability insurance. The liability insurance required is as follows: Contractor's General Public Liability and Property Damage Insurance issued to the Contractor and protecting the Contractor from all claims for personal injury, including death, and all claims for destruction of or damage to property, arising out of or in connection with any operations under this Contract, whether such operations be by the Contractor or by any Subcontractor hired by the Contractor or anyone directly or indirectly employed by the Contractor or hired by the Contractor.

The successful Contractor shall supply and maintain insurance which defends, indemnifies and holds harmless the City of St. Pete Beach, its officers, employees and agents from and against any and all liability, damage claims, demands, costs, judgments, fees, attorney's fees or loss arising directly out of acts or omissions hereunder by the Contractor or third party under the direction or control of the Contractor. Such general and excess liability coverage shall be primary to any other

coverage carried by the City of St Pete Beach. Contractor must furnish the City with Certificate of Insurance prior to commencement of work. An approved Certificate of Insurance furnished by the Contractor's carrier to guarantee the Contractor being insured with the City of St Pete Beach must be named as a certificate holder for this contract. The following minimum coverage:

- Commercial General Liability Insurance $1,000,000.00.
- Comprehensive General Liability Insurance of $1,000,000.00 each occurrence.
- Personal Injury for $1,000,000.00 each occurrence.
- Automobile Liability $1,000,000.00.
- General Workers Compensation Insurance as required by Florida law.
- Longshore Harbor Workers Compensation Insurance

PROTECTION OF WORK AND PROPERTY

The Contractor shall continuously maintain adequate protection of all their work and materials from damage or theft and shall protect the City's property and all adjacent property from injury or loss arising in connection with activities under their Contract. The Contractor shall make good any such damage, injury, or loss, except such as may be caused by agents or employees of the City.

The Contractor shall take, use, provide, and maintain all necessary precautions, safeguards, and protection to prevent accidents, or injury to persons or property on, about, or adjacent to the site of the work. Should the situation arise that physical security is needed the Contractor will provide security on off days and holidays. The Contractor shall be responsible for all charges incurred with such action.

The Contractor shall post danger signs warning against any hazards created by the work being done under their Contract. They shall designate a responsible member of their organization on the work, whose duty shall be the prevention of accidents, and the name of the person so designated shall be reported to the City Manager or designee and City in writing. In an emergency affecting the safety of life, or of the work or adjoining property, the Contractor, without special instruction or authorization from the City Manager or designee, or City, is hereby permitted to act, at their own discretion, to prevent such threatened loss or injury, and they must take such action if so instructed or authorized by the City Manager or designee. The Contractor shall also protect adjacent property as required by law.

PARKING

The Contractor shall arrange with City Manager or designee for temporary parking areas to accommodate construction personnel and construction equipment. Note that limited parking spaces are available in the City of St. Pete Beach. The Contractor will be asked to coordinate with the City's representative on site on a regular basis to minimize the impact on residents and visitors.

TRANSPORTATION, HANDLING AND STORAGE

The Contractor shall transport, handle, protect and store products in accordance with manufacturer's instructions and all environmental regulatory agencies.

VEHICLES

Business vehicles shall be identified on both sides with the name of the company.

ENVIRONMENTAL PROTECTION

It shall be the Contractor's responsibility to implement construction methods, best management practices, and erosion control methods that avoid water pollution as required by the State of Florida Department of Environmental Protection (FDEP), City of St. Pete Beach, and Pinellas County. Any Contractors in violation of the City of St. Pete Beach Regulations, Pinellas County Regulations, Florida Department of Environmental Protection Regulations, or any other regulatory agency regulations shall be the sole responsibility of the Contractor. The Contractor shall hold harmless the City of St. Pete Beach and the City Manager or designee from any fines and litigation resulting from the Contractor's actions. The Contractor shall pay all attorneys' fees, fines, penalties and any other such expenses resulting from the Contractor's actions. The Contractor shall provide all necessary measures to prevent any materials whatsoever from entering the waterway except for those materials, which are shown, on the plans as completed structures. The Contractor shall provide MSDS sheets to the City Manager or designee on all applicable materials before applying those materials. The Contractor shall secure the necessary education, certifications, licenses and permits required by state and local agencies to operate and manage a construction site, including but not limited to, FDEP requirements related to Coastal Construction Control Line. The Contractor shall abide by all rules and regulations set forth and required by the City of St. Pete Beach's MS4 NPDES Permit.

TIMELY DEMAND FOR STAKES AND INSTRUCTIONS

The Contractor shall provide reasonable and necessary materials, opportunities, and assistance for setting stakes and making measurements, including the furnishing of a rodman, or a chainman at intermittent times during the construction period. They shall not proceed until they have received such stakes and instructions as may be necessary as the work progresses. The work shall be done in strict conformity with such stakes and instructions. The Contractor shall carefully preserve benchmarks, reference points and stakes, and in case of willful or careless destruction, they will be charged with the resulting expense and shall be responsible for any mistakes that may be caused by their unnecessary loss or disturbance.

WORKMANSHIP

The Contractor acknowledges that they have satisfied themselves as to the nature and location of the work; the general and local conditions including but not restricted to those bearing upon transportation, disposal, handling and storage of materials; availability of labor, water, electric power, roads; and uncertainties of weather, surface conditions, subsurface conditions, tides or similar physical conditions at the site, the character of equipment and facilities required to prosecute the work. Any failure by the Contractor to acquaint themselves with any aspect of the work or with any of the applicable conditions shall not relieve the Contractor from the responsibility to successfully perform the work under the Contract Documents, nor shall it be considered the basis for any claim for additional time or compensation.

UTILITIES

The Contractor shall anticipate all underground obstructions such as water lines, gas lines, sewer lines, utility lines, or any other public or private facilities and debris. In all cases where existing utility lines may be interfered with by the work, the Contractor shall give a minimum of thirty-six (36) hours' notice to the owners of such utilities, to permit them to relocate the lines prior to

construction. No extra payment shall be allowed for the removal, replacement, repair or possible increased cost caused by underground obstructions. The location of existing structures and utilities provided in the plans are approximate only. Any damage to existing structures to remain or work of any kind shall be repaired or restored promptly by, and at the expense of the Contractor.

The Contractor shall at all times protect all desirable trees, plants, curbs, sidewalks, irrigation components, and structures not requiring removal to accomplish the work, whether or not they are shown on the plans. The Contractor must contact the City to obtain tree removal permits for the removal of any tree not identified for removal in the Project Plans.

In matters of restoration, all materials, construction, and workmanship shall be acceptable to, and approved by the City of St. Pete Beach and the City Manager or designee. No changes in size, shape, configuration, location, materials, or construction shall be made without prior written authorization from the City Manager or designee. Any demolition debris and other debris shall be hauled offsite and properly disposed of by the Contractor and shall be inclusive to the prices as stated in the BID SCHEDULE, unless otherwise stipulated as part of the project to remain.

No interruption of ingress and egress to private property shall be made unless the Contractor has made prior arrangements acceptable to the owner of the affected property. The City Manager or designee shall notify affected residents/property owners of impending activity or inconvenience via door hanger.

The Contractor shall provide all traffic control devices utilized during construction and meet the requirements set forth in the Florida State Department of Transportation "Manual on Traffic Control and Safe Practices for Street and Highway Construction, Maintenance, and Utility Operations."

CLEANING UP

Upon completion or termination of the work the Contractor shall, as directed by the City Manager or designee, remove from the vicinity of the work all equipment and temporary structures, waste materials and rubbish resulting from his operations, leaving the premises in a neat and presentable condition. All debris generated by the Contractor will be removed before leaving the area. All areas will be raked to remove smaller debris. All surrounding sidewalks, parking lots and roadways will be cleared of any dust or debris generated by the Contractor. In the event of their failure to do so, the City at the expense of the Contractor may do the same, and their Surety shall be responsible.

DEFECTIVE WORK OR MATERIAL

The Contractor shall promptly remove from the premises all work and materials condemned by the City
Manager or designee as failing to conform to the Contract, whether incorporated or not, and the Contractor shall promptly replace and re-execute his own work in accordance with the Contract and without expense to the City and shall bear the expense of making good all work of other Contractors destroyed or damaged by such removal or replacement.

If the Contractor does not remove such condemned work or materials within a reasonable time after notice, the City may remove them and store the materials at the expense of the Contractor. If the Contractor does not pay the expense of such removal within ten (10) business days' time thereafter, the City may, upon thirty (30) business days written notice sell such materials at auction or at private sale and shall account for the net proceeds thereof after deducting all the costs and expenses that should have been borne by the Contractor.

DISPUTE RESOLUTION

The Contract shall be construed under Florida law. The parties agree that all controversies, claims and other matters in question between the parties arising out of or relating to this Contract or its breach shall be resolved through mediation. Upon notice of any party to the Contract of a dispute, question or controversy, the parties shall agree to the appointment of a qualified mediator. A qualified mediator is a person who has received at least forty (40) hours of mediation training and has actual experience as a mediator in resolving contract disputes. If the dispute, question or controversy is not resolved through mediation within sixty (60) business days of a notice of the dispute between the parties, the City reserves the right to seek resolution through court action.

INDEMNIFICATION

In consideration of the payment of ten dollars ($10.00) as part of the above purchase price, Contractor shall indemnify, defend, and hold harmless the City, its officers and employees, from liabilities, damages, losses and costs, including but not limited to, reasonable attorney's fees, to the extent caused by the negligence, recklessness, or intentional wrongful misconduct of the responding firm and any persons employed or utilized by the responding firm in the performance of the Contract.

GENERAL WARRANTY

Neither the final certificate nor any provision in the Contract Documents nor partial or entire occupancy of the premises by the City shall constitute an acceptance of work not done in accordance with the Contract Documents or relieve the Contractor of liability in respect to any express warranties or responsibility for faulty materials or workmanship. The Contractor shall remedy any defects in the work and pay for any damage to other work resulting therefrom that shall appear within a period of eighteen (18) months from the date of final acceptance of the work, unless a longer period is specified. The City shall give notice of observed defects with reasonable promptness.

LAND OF CITY, USE OF, BY CONTRACTOR

The City shall provide the land upon which the work under this Contract is to be done, and will, so far as is convenient, permit the Contractor to use as much of the land as is required for the erection of temporary construction facilities and storage of materials, together with the right of access to same, but beyond this, the Contractor shall provide, at his/her cost and expense, any additional land required. It will be the responsibility of the Contractor to repair or restore to the satisfaction of the City, at their own expense, any damage to land used for the above stated activities or any other activities approved by the City.

OTHER WORK

Wherever work being done by the City or by other Contractors is contiguous to work covered by this Contract, the respective rights of the various interests involved shall be established by the City Manager or designee to secure the completion of the various portions of the work in general harmony.

OTHER CONTRACTS

The City may award other Contracts. The Contractor shall fully cooperate with such other Contractors and carefully fit his/her own work to that provided under other Contracts, as may be with the performance of work by any other Contractor or City.

COOPERATIVE PURCHASING

Pursuant to their own governing laws and subject to the agreement of the Contractor, governmental entities may make purchases under the terms and conditions contained in the executed Contract, if agreed to by Contractor. Such purchases are independent of the Contract between the City and the Contractor, and the City is not a party to these transactions. Agencies seeking to make purchases under this Contract are required to follow the requirements of Rule 60A-1.045(5), F.A.C.

DELAYS AND EXTENSION OF TIME

If the Contractor should be delayed at any time in the progress of the work by an act or neglect of the City or the City Manager or designee, or of any employee of either, or by any separate Contractor employed by the City, or by changes ordered in the work, or by strike, lockouts, fire, unusual delay in transportation, unavoidable casualties, or any cases beyond the Contractor's control, or by delay authorized by the City Manager or designee, or by any cause which the City Manager or designee shall decide to justify the delay, then the time of completion shall be extended for such reasonable time as the City Manager or designee may decide. No such extension shall be made for a delay that occurs more than five (5) business days before a claim is made in writing to the City Manager or designee. In the case of a continued cause of delay, only one (1) claim is necessary. This section does not exclude the recovery of damages for delay by either party under other provisions in the Contract Documents.

CITY'S RIGHT TO TAKE OVER THE WORK

If the Contractor shall be adjudged bankrupt, or if they should make a general assignment for the benefit of its creditors, or if a receiver should be appointed to take over their affairs, or if they should fail to prosecute their work with due diligence and carry the work forward in accordance with its' work schedule and the time limits set forth in the Contract Documents, or if they should fail to substantially perform one or more of the provisions of the Contact Documents to be performed by them, the City may serve written notice on the Contractor and the Surety on its' performance bond, stating the City's intention to exercise one of the remedies hereinafter set forth and the grounds upon which the City bases its right to exercise such remedy. In any event, unless the matter complained of is satisfactorily cleared within ten (10) business days after the service of such notice, the City may, without prejudice to any other right or remedy exercise one of such remedies at once; having first obtained a certificate from the City Manager or designee that such sufficient cause exists to justify such action.

The City may terminate the services of the Contractor, which termination shall take effect immediately upon service of notice thereof on the Contractor and their Surety, whereupon the Surety shall have the right to take over and perform the Contract. If the Surety does not commence performance of the Contract within ten (10) ten days after service of the notice of termination, the City may itself take over the work, take possession of and use all materials, tools, equipment, and appliances on the premises and prosecute the work to completion by such means as it shall deem best. In the event of such termination of their service, the Contractor shall not be entitled to any further payment under their Contract until the work is completed and accepted. If the City takes over the work and the unpaid Contract balance exceeds the cost of completing the work, including compensation for damages or expenses incurred by the City through the default of the Contractor,

the excess unpaid Contract balance shall be paid to the Contractor. If the City takes over the work and the unpaid Contract balance does not exceed the cost of completing the work, including compensation for damages or expenses incurred by the City through the default of the Contractor, the Contractor and his Surety shall pay the difference to the City. The City Manager or designee shall certify such cost, expenses, and damages.

The City may take control of the work and either make good the deficiencies of the Contractor itself or direct the activities of the Contractor in doing so, employing such additional help as the City deems advisable. In such event, the City shall be entitled to collect from the Contractor and his Surety, or to deduct from any payment then or thereafter due the Contractor, the costs incurred by it through the default of the Contractor, provided the City Manager or designee approves the amount thus charged to the Contractor.

The City may require the Surety on the Contractor's bond to take control of the work at once and see to it that all deficiencies of the Contractor are made good with due diligence. As between the City and the Surety, the entire cost of making good such deficiencies shall be borne by the Surety. If the Surety takes over the work, either upon termination of the services of the Contractor or upon instructions from the City to do so, the provisions of the Contract Documents shall govern in respect to the work done by the Surety, the Surety being substituted for the Contractor as to such provisions, including provisions as to the payment for the work and provisions of this section as to the right of the City to do the work itself or to take control of the work.

RIGHT OF OCCUPANCY

The City shall have the right, if necessary, to take possession of and to use any completed or partially completed portions of the work, if such use be approved by the City Manager or designee even if the time for completing the entire work or such portions of the work has not expired and even if the work has not been finally accepted. Such possession and use shall not constitute an acceptance of such possession and use if it materially interferes with the Contractor's operations. The City shall also have the right to enter the premises with the Contractor for the purpose of doing work not covered by its Contract.

ACCEPTANCE

Final inspection and acceptance of the work shall be made for the City by the City Manager or designee. Such inspection shall be made as soon as practical after the Contractor has notified the City in writing that the work is ready for such inspection.

WAIVER

It is expressly understood and agreed that any waiver granted by the City Manager or designee of any term, provision, or covenants of the Contract shall not constitute a precedent or breach of the same or any other terms, provisions, or covenants of the Contract. Neither the acceptance of the work by the City nor the payment of all or any part of the sum due the Contractor hereunder shall constitute a waiver by the City of any claim which the City may have against the Contractor or Surety under this Contract or otherwise.

INSPECTION

The City Manager or designee and his representative shall, at all times, have access to the work during its construction and shall be furnished with every reasonable facility for ascertaining that the stock and materials used and employed, and the workmanship, are in accordance with the

requirements and intentions of the Plans. All work done and all materials furnished shall be subject to their inspection and approval by the City Manager or his designee. If any work should be covered up without approval or consent of City Manager or designee, it must, if required by the City Manager or designee, be uncovered for examination at the Contractor's expense.

The City Manager or designee may order re-examination of questioned work and if so ordered, the Contractor must uncover the work. If such work were found in accordance with the Contract Documents, the City shall pay the cost of re-examination and replacement. If such work be found not in accordance with the Contract Documents, the Contractor shall pay such costs unless they show that the defect in the work was caused by another Contractor, and in that event, the City shall pay such cost.

The inspection of the work shall not relieve the Contractor of any of their obligations to fulfill their Contract as prescribed, and defective work shall be made good and unsuitable materials shall be rejected, notwithstanding that such defective work and materials have been previously overlooked and accepted on estimates for payment. All work shall be tested to the satisfaction of the City Manager or designee before acceptance.

BID REVIEW AND CONTRACT AWARD

Failure to submit all documents requested at the time of bid may deem the Contractor's bid ineligible for award. The City of St. Pete Beach reserves the right to reject any or all bids or parts of bids or accept any bid or part thereof deemed to be in the best interests to the City of St. Pete Beach. The City shall be the sole final judge of qualifications of the bidder to perform service and reserves the exclusive right to accept or reject any bids as it deems to be in the best interests of the City. The City may waive any informality.

LOCAL, STATE AND FEDERAL COMPLAINCE REQUIREMENTS

The laws of the State of Florida do apply to any purchase made under this Request for Bid. Proposers shall comply with all local, state, and federal directives, orders and laws as applicable to their bid and subsequent contracts include but not limited to Equal Employment Opportunity, Minority Business Enterprise, and OSHA as applicable to this contract.

Compliance with Fla. Stat. 448.095:

- Contractor agrees to comply with all applicable portions of Fla. Stat. 448.095. Contractor must use the U.S. Department of Homeland Security's E-Verify System, hhtps://e-verify.uscis.gov/emp, to verify the employment eligibility of all employees hired on or after January 1, 2021 during the term of this Agreement.

- Subcontractors (i) Contractor shall also require all subcontractors performing work under this Agreement to use the E-Verify system for any employees they may hire during the term of this Agreement. (ii) Subcontractors shall provide Contractor with an affidavit stating the subcontractor does not employ, contract with, or subcontract with an unauthorized alien, as defined by Fla. Stat. 448.095 (iii) Contractor shall provide a copy of such affidavit to the City upon receipt and shall maintain a copy for the duration of the Agreement.

- Contractor must provide evidence of compliance with Fla. Stat. 448.05 by January 1, 2021. Evidence may consist of, but is not limited to, providing notice of Contractor's E-Verify number.

- Failure to comply with this provision is a material breach of the Agreement, and the City may choose to terminate the Agreement at its sole discretion. Contractor may be liable for all costs associated with the City securing the same services, inclusive, but not limited to, higher costs for the same services and rebidding costs (if necessary). Any challenge to termination under this provision must be filed in the Circuit Court no later than 20 calendar days after the date of termination. If this agreement is terminated for a violation of the statue by the Contractor, the Contractor may not be awarded a public agreement for a period of 1 year after date of termination.

RESERVES THE RIGHT

The City reserves the right to accept or reject any and/or all bids, to waive irregularities and technicalities, and to request re-submission. If only one bid is received by the bid date and time listed, the bid may or may not be rejected by the City depending upon bid review and the needs of the City.

The City reserves the right to select a firm with or without additional interviews and may decide to select any of the firms submitting bids. The City reserves the right to award the contract to a responsible proposer submitting a responsible bid, with a resulting negotiated agreement which is most advantageous and in the best interest of the City.

Proposers, bidders, their agents, and associates shall not contact or solicit any City Commission member, City employee, or official regarding this RFB during any phase of the bidding process. Failure to comply with the provision may result in disqualification of the bidder, at the option of the City. Only that individual listed, or an approved designee, as the contact person for this RFB shall be contacted.

SUBMITTAL WITHDRAWAL

After submittals are opened, corrections or modifications to submittals are not permitted, but a responding firm may be permitted to withdraw an erroneous submittal prior to the award by the City Commission, if the following is established:

- That the responding firm acted in good faith in submitting the submittal;
- That in preparing the submittal there was an error of such magnitude that enforcement of the submittal would work severe hardship upon the respondent;
- That the error was not the result of gross negligence or willful inattention on the part of the respondent;
- That the error was discovered and communicated to the City within twenty-four (24) hours of submittal opening, along with a request for permission to withdraw the submittal; or
- The responding firm submits documentation and an explanation of how the error was made.

CONE OF SILENCE

Respondents to this solicitation or persons acting on their behalf may not contact, between the release of the solicitation and the end of the 72-hour period following the agency posting the notice of intended award, excluding Saturdays, Sundays, and state holidays, any employee or officer of the executive or legislative branch concerning any aspect of this solicitation, except in writing to the

procurement officer or as provided in the solicitation documents. Violation of this provision may be grounds for rejecting a response.

TERMINATION

The resulting contract may be canceled by the City when:

- Sufficient funds are not available to continue its full and faithful performance of this contract.
- There is sub-standard or non-performance of contract.
- The City wishes to terminate at any time and for any reason, upon giving thirty (30) days prior written notice to the other party.

The resulting contract may be canceled by either party in the event of substantial failure to perform in accordance with the terms by the other party through no fault of the terminating party.

FISCAL NON-FUNDING

If funds for the requested services described herein are not appropriated via the annual budget adoption process, the City reserves the right to cancel this Agreement immediately upon written notice to the vendor.

PROJECT RECORDS

The awarded firm shall maintain auditable records concerning the procurement to account for all receipts and expenditures, and to document compliance with the Contract. These records shall be kept in accordance with generally accepted accounting methods, and the City of St. Pete Beach reserves the right to determine the record-keeping method in the event of non-conformity. These records shall be maintained for three (3) years after final payment has been made and shall be readily available to City personnel with reasonable notice, and to other persons in accordance with the Florida Public Disclosure Statutes. Additionally, the awarded firm shall abide by and comply with Florida Statutes regarding public records. Specifically, the firm shall be aware of the provisions found in Section 119.0701, Florida Statutes.

Upon completion of the project, all reports, studies, recommendations, forms, and other project specific information will need to be submitted in paper and in an electronic file format (.PDF, .JPEG) on CD or USB storage device.

REFERENCES & MINIMUM QUALIFICATIONS

Provide at least three (3) or more professional business references with which you have contracted to provide similar services in the past five (5) years. Include the name of the person, its organization and telephone number, fax number, and e-mail address. Include any governmental agencies, with the same contact and descriptive information for which you have provided similar service within the past five (5) years.

Provide a brief description of the history and capabilities of the firm. Describe the types of projects or services the firm performs/has performed and the dollar value of each. Provide information regarding your firm's ability to complete this project. Demonstrate that the firm's personnel have experience with similar projects.

Identify all unresolved and ongoing claims and disputes against your firm in excess of $500,000. Include any claims against the principals of your firm or any claims your company may have against a third party. Provide a history of litigation, including the outcomes, for the past five (5) years.

The responding firm shall provide a statement of assurance that the firm is not presently in violations of any statutes or regulatory rules that might have an impact on the firm's operations. All applicable laws and regulations of the State of Florida and ordinances and regulations of the City of St. Pete Beach will apply.

Provide the overall bonding capacity for the company and provide a history of any claims against the bidder's previous bonds for the past five (5) years.

The City shall be the sole final judge of qualifications of bidder to perform service and reserves the exclusive right to accept or reject any bid as it deems to be in the best interests of the City. The City reserves the right to make such investigation, as it deems necessary, to determine the ability of any proposer to perform the work or service requested. Failure to comply with the requirements of this section may be grounds for rejecting a response.

V. PUBLIC ENTITY CRIMINAL AFFIDAVIT

SWORN STATEMENT – PUBLIC ENTITY CRIMES

PURSUANT TO § 287.133 (3)(a), FLORIDA STATUTES, ON PUBLIC ENTITY CRIMES
THE FORM MUST BE SIGNED AND SWORN TO IN THE PRESENCE OF A NOTARY PUBLIC OR OTHER OFFICIAL AUTHORIZED TO ADMINISTER OATHS.

1. This sworn statement is submitted to: City of St. Pete Beach

by: Michael Cardona Jr, Owner
(Print individual's name and title)

for: Free Agent Marine LLC
(Print name of entity submitting sworn statement)

at: 4807 Londonderry Drive Tampa FL, 33647
(Business address)

and (if applicable), its Federal Employer Identification Number (FEIN):

88-2598669
(FEIN)

or, if the entity has no FEIN, include the Social Security Number:

(SSN)

by the individual signing this sworn statement:

Michael Cardona
(Signature)

2. I understand that a "public entity crime" as defined in § 287.133 (1)(g), Fla. Stat., means a violation of any State or Federal law by a person with respect to and directly related to the transaction of business with any public entity or with an agency or political subdivision of any other state or of the United States including, but not limited to, any bid or contract for goods or services, any lease for real property, or any contract for the construction or repair of a public building or public work, involving antitrust, fraud, theft, bribery, collusion, racketeering, conspiracy, or material misrepresentation.

3. I understand that "convicted" or "conviction" as defined in § 287.133 (1)(b), Fla. Stat., means a finding of guilt or a conviction of public entity crime with or without an adjudication of guilt in any Federal or State trial court of record relating to charges brought by indictment or information after July 1, 1989, as a result of a jury verdict, non-jury trial, or entry of a plea of guilty or nolo contendere.

4. I understand that an "affiliate" as defined in § 287.133 (1)(a), Fla. Stat., means:
   a. A predecessor or successor of a person convicted of a public entity crime or
   b. An entity under the control of any natural person who is active in the management of the entity and who has been convicted of a public entity crime. The term "affiliate" includes those officers, directors, executives, partners, shareholders, employees, members, and agents who are active in the management of an affiliate. The ownership by one (1) person of shares constituting a controlling interest in another person or a pooling of equipment or income among persons when not for fair market value under the arm's length agreement, shall be a prima facie case that one (1) person controls another person. A person who

knowingly enters into a joint venture with a person who has been convicted of a public crime in Florida during the preceding thirty-six (36) months shall be considered an affiliate.

5. I understand that a "person" as defined in Section 287.133 (1)(e), Fla. Stat., means any natural person or any entity organized under the laws of any state or of the United States with the legal power to enter into a binding contract and which bids or applies to bid on contracts let by a public entity, or which otherwise transacts or applies to transact business with a public entity. The term "person" includes those officers, directors, executives, partners, shareholders, employees, members, and agents who are active in management of an entity.

6. Based on information and belief, the **statement which I have marked below is true** in relation to the entity submitting this sworn statement (indicate which statement applies).

☑ Neither the entity submitting this sworn statement, nor any of its officers, directors, executives, partners, shareholders, employees, members, or agents who are active in the management of the entity nor any affiliate of the entity has been charged with and convicted of a public entity crime subsequent to July 1, 1989.

☐ The entity submitting this sworn statement or one (1) or more of its officers, directors, executives, partners, shareholders, employees, members, or agents who are active in the management of the entity or an affiliate of the entity has been charged with and convicted of a public entity crime subsequent to July 1, 1989.

☐ The entity submitting this sworn statement or one (1) or more of its officers, directors, executives, partners, shareholders, employees, members, or agents who are active in the management of the entity or an affiliate of the entity has been charged with and convicted of a public entity crime subsequent to July 1, 1989. However, there has been a subsequent proceeding before a Hearing Office of the State of Florida, Division of Administrative Hearings and the Final Order entered by the Hearing Officer determined that it was not in the public interest to place the entity submitting this sworn statement on the convicted vendor list (attach a copy of the final order).

I UNDERSTAND THAT THE SUBMISSION OF THIS FORM TO THE CONTRACTING OFFICE FOR THE PUBLIC ENTITY IDENTIFIED IN PARAGRAPH 1 ABOVE IS FOR THE PUBLIC ENTITY ONLY AND THAT THIS FORM IS VALID THROUGH DECEMBER 31 OF THE CALENDAR YEAR IN WHICH IT IS FILED. I ALSO UNDERSTAND THAT I AM REQUIRED TO INFORM THE PUBLIC ENTITY PRIOR TO ENTERING INTO A CONTRACT IN EXCESS OF THE THRESHOLD AMOUNT PROVIDED IN SECTION 287.017, FLORIDA STATUTES, FOR CATEGORY TWO OF ANY CHANGE IN THE INFORMATION CONTAINED IN THIS FORM.

STATE OF FLORIDA
COUNTY OF Pasco

The foregoing instrument was sworn to (or affirmed), subscribed, and acknowledged before me **by means of ☑ physical presence or ☐ online notarization**, this 7 day of April, 2026, by Mike Cooney, who is personally known to me or has produced Drivers License as identification.

(SEAL)

BRIAN WATSON
MY COMMISSION # HH661449
EXPIRES: April 07, 2029

Notary Public – State of Florida

Brian Watson
(Print, Type, Stamp, or Commissioned Name of Notary Public)

VI. NON-COLLUSION AFFADAVIT

STATE OF Florida
COUNTY OF Hillsborough

I state that I Michael Cardona Jr, Owner of Free Agent Marine LLC
(Name and Title) (Name of Firm)
am authorized to make this affidavit on behalf of my firm and its owner, directors and officers. I am the person responsible in my firm for the price(s) and amount(s) of this Response, and the preparation of the Response. I state that:

1. The price(s) and amount(s) of this Response have been arrived at independently and without consultation, communication or agreement with any other Provider, potential provider, Proposal, or potential Proposal.

2. Neither the price(s) nor the amount(s) of this Response, and neither the approximate price(s) nor approximate amount(s) of this Response, have been disclosed to any other firm or person who is a Provider, potential Provider, Proposal, or potential Proposal, and they will not be disclosed before Proposal opening.

3. No attempt has been made or will be made to induce any firm or persons to refrain from submitting a Response for this contract, or to submit a price(s) higher that the prices in this Response, or to submit any intentionally high or noncompetitive price(s) or other form of complementary Response.

4. The Response of my firm is made in good faith and not pursuant to any agreement or discussion with, or inducement from, any firm or person to submit a complementary or other noncompetitive Response.

5. Free Agent Marine LLC its affiliates, subsidiaries, officers, director, and employees (Name of Firm) are not currently under investigation, by any governmental agency and have not in the last three years been convicted or found liable for any act prohibited by State or Federal law in any jurisdiction, involving conspiracy or collusion with respect to Proposal, on any public contract, except as follows:

I state that I and the named firm understand and acknowledge that the above representations are material and important, and will be relied on by the State of Florida for which this Response is submitted. I understand and my firm understands that any misstatement in this affidavit is, and shall be treated as, fraudulent concealment from the State of Florida of the true facts relating to the submission of responses for this contract.

Name of Organization: Free Agent Marine LLC

Signed By: Michael Cardona

Print Name: Michael Cardona

The foregoing instrument was sworn to (or affirmed), subscribed, and acknowledged before me **by means of ☒ physical presence or ☐ online notarization**, this 7 day of April, 2026, by Mike Cardona, who is personally known to me or has produced Drivers License as identification.

(SEAL)

Notary Public – State of Florida

BRIAN WATSON
MY COMMISSION # HH661449
EXPIRES: April 07, 2029

Brian Watson
(Print, Type, Stamp, or Commissioned Name of Notary Public)

VII. SPECIFICATIONS

No additional information other than what has been provided under “Scope of Work"

ADDENDA ACKNOWLEDGMENT

Free Agent Marine LLC hereby acknowledges receipt and incorporation of the following addenda issued for this solicitation:

- **Addendum No. 1 – Issued March 23, 2026**
- **Addendum No. 2 – Issued March 27, 2026**

All provisions, clarifications, and requirements contained within the above-referenced addenda have been reviewed and are fully incorporated into this bid submission.

Submitted by:
Free Agent Marine LLC

Signature: _____*Michael Cardona jr*_____
Name: Michael Cardona
Title: Owner
Date: __04/07/2026_____

CERTIFICATE OF LIABILITY INSURANCE

DATE (MM/DD/YYYY): 4/7/2026

THIS CERTIFICATE IS ISSUED AS A MATTER OF INFORMATION ONLY AND CONFERS NO RIGHTS UPON THE CERTIFICATE HOLDER. THIS CERTIFICATE DOES NOT AFFIRMATIVELY OR NEGATIVELY AMEND, EXTEND OR ALTER THE COVERAGE AFFORDED BY THE POLICIES BELOW. THIS CERTIFICATE OF INSURANCE DOES NOT CONSTITUTE A CONTRACT BETWEEN THE ISSUING INSURER(S), AUTHORIZED REPRESENTATIVE OR PRODUCER, AND THE CERTIFICATE HOLDER.

IMPORTANT: If the certificate holder is an ADDITIONAL INSURED, the policy(ies) must be endorsed. If SUBROGATION IS WAIVED, subject to the terms and conditions of the policy, certain policies may require an endorsement. A statement on this certificate does not confer rights to the certificate holder in lieu of such endorsement(s).

PRODUCER Fisk Marine Insurance International, LLC 8110 Breakwater Drive New Orleans LA 70124	**CONTACT NAME:** Jodi Wibel **PHONE (A/C, No, Ext):** (504) 302-4400 **FAX (A/C, No):** (866) 543-4619 **E-MAIL ADDRESS:** jwibel@fiskusa.com
INSURED FREEAGE-01 Free Agent Marine LLC 4807 Londonberry Dr Tampa FL 33647	**INSURER(S) AFFORDING COVERAGE** / **NAIC #** **INSURER A :** American Interstate Insurance Company — 31895 **INSURER B :** STRATFORD INS CO — 40436 **INSURER C :** **INSURER D :** **INSURER E :** **INSURER F :**

COVERAGES **CERTIFICATE NUMBER:** 1001117350 **REVISION NUMBER:**

THIS IS TO CERTIFY THAT THE POLICIES OF INSURANCE LISTED BELOW HAVE BEEN ISSUED TO THE INSURED NAMED ABOVE FOR THE POLICY PERIOD INDICATED. NOTWITHSTANDING ANY REQUIREMENT, TERM OR CONDITION OF ANY CONTRACT OR OTHER DOCUMENT WITH RESPECT TO WHICH THIS CERTIFICATE MAY BE ISSUED OR MAY PERTAIN, THE INSURANCE AFFORDED BY THE POLICIES DESCRIBED HEREIN IS SUBJECT TO ALL THE TERMS, EXCLUSIONS AND CONDITIONS OF SUCH POLICIES. LIMITS SHOWN MAY HAVE BEEN REDUCED BY PAID CLAIMS.

INSR LTR	TYPE OF INSURANCE	ADDL INSR	SUBR WVD	POLICY NUMBER	POLICY EFF (MM/DD/YYYY)	POLICY EXP (MM/DD/YYYY)	LIMITS	
B	**GENERAL LIABILITY** X COMMERCIAL GENERAL LIABILITY CLAIMS-MADE X OCCUR X SRLL GEN'L AGGREGATE LIMIT APPLIES PER: X POLICY PRO-JECT LOC	Y	Y	VMP8000529	8/18/2025	8/18/2026	EACH OCCURRENCE DAMAGE TO RENTED PREMISES (Ea occurrence) MED EXP (Any one person) PERSONAL & ADV INJURY GENERAL AGGREGATE PRODUCTS - COMP/OP AGG	$ 1,000,000 $ 50,000 $ 5,000 $ 1,000,000 $ 2,000,000 $ 1,000,000
	AUTOMOBILE LIABILITY ANY AUTO ALL OWNED AUTOS SCHEDULED AUTOS HIRED AUTOS NON-OWNED AUTOS						COMBINED SINGLE LIMIT (Ea accident) BODILY INJURY (Per person) BODILY INJURY (Per accident) PROPERTY DAMAGE (Per accident)	$ $ $ $
	UMBRELLA LIAB OCCUR **EXCESS LIAB** CLAIMS-MADE DED RETENTION $						EACH OCCURRENCE AGGREGATE	$ $
A	**WORKERS COMPENSATION AND EMPLOYERS' LIABILITY** Y / N ANY PROPRIETOR/PARTNER/EXECUTIVE OFFICER/MEMBER EXCLUDED? N / A **(Mandatory in NH)** If yes, describe under DESCRIPTION OF OPERATIONS below	N / A	Y	AVWCFL3388942025	6/27/2025	6/27/2026	X WC STATU-TORY LIMITS X OTH-ER E.L. EACH ACCIDENT E.L. DISEASE - EA EMPLOYEE E.L. DISEASE - POLICY LIMIT	USL&H $ 1,000,000 $ 1,000,000 $ 1,000,000
A B	MEL Equipment			AVWCFL3388942025 VMP8000529	6/27/2025 8/18/2025	6/27/2026 8/18/2026	MEL Limit	1,000,000

DESCRIPTION OF OPERATIONS / LOCATIONS / VEHICLES (Attach ACORD 101, Additional Remarks Schedule, if more space is required)

General liability policy contains the following endorsements: Blanket additional assured and blanket waiver of subrogation as required by written contract, sudden and accidental pollution, ship repairer's legal liability, traveling workmen, primary/non-contributory endorsement, and modified bodily injury to divers up to 50ft. Workers comp policy includes blanket waiver of subrogation as required by written contract, USL&H, blanket alternate employer, voluntary compensation, OCSLA, GOM extension, TWM&C and MEL ($1MM limit).
City of St. Pete Beach is an Additional Insured respect to GL as required by written contract.
Commercial Diving Services – St. Pete Beach Commercial Diving Services 2026 Contract

CERTIFICATE HOLDER

City of St. Pete Beach
155 Corey Ave
St Pete Beach FL 33706

CANCELLATION

SHOULD ANY OF THE ABOVE DESCRIBED POLICIES BE CANCELLED BEFORE THE EXPIRATION DATE THEREOF, NOTICE WILL BE DELIVERED IN ACCORDANCE WITH THE POLICY PROVISIONS.

AUTHORIZED REPRESENTATIVE

© 1988-2010 ACORD CORPORATION. All rights reserved.

ACORD®

CERTIFICATE OF LIABILITY INSURANCE

DATE (MM/DD/YYYY)
04/08/2026

THIS CERTIFICATE IS ISSUED AS A MATTER OF INFORMATION ONLY AND CONFERS NO RIGHTS UPON THE CERTIFICATE HOLDER. THIS CERTIFICATE DOES NOT AFFIRMATIVELY OR NEGATIVELY AMEND, EXTEND OR ALTER THE COVERAGE AFFORDED BY THE POLICIES BELOW. THIS CERTIFICATE OF INSURANCE DOES NOT CONSTITUTE A CONTRACT BETWEEN THE ISSUING INSURER(S), AUTHORIZED REPRESENTATIVE OR PRODUCER, AND THE CERTIFICATE HOLDER.

IMPORTANT: If the certificate holder is an ADDITIONAL INSURED, the policy(ies) must have ADDITIONAL INSURED provisions or be endorsed. If SUBROGATION IS WAIVED, subject to the terms and conditions of the policy, certain policies may require an endorsement. A statement on this certificate does not confer rights to the certificate holder in lieu of such endorsement(s).

PRODUCER	CONTACT NAME: Progressive Commercial Lines Customer and Agent Servicing
Progressive Insurance PO Box 94739, Cleveland, OH 44101	PHONE (A/C, No, Ext): 1-800-444-4487 / FAX (A/C, No): E-MAIL ADDRESS: progressivecommercial@email.progressive.com

INSURED	INSURER(S) AFFORDING COVERAGE	NAIC #
Free Agent Marine LLC 4807 Londonberry DR Tampa, FL 33647	INSURER A : Progressive Express Insurance Company	10193
	INSURER B :	
	INSURER C :	
	INSURER D :	
	INSURER E :	
	INSURER F :	

COVERAGES **CERTIFICATE NUMBER:** 934969351044634782D040826T012744 **REVISION NUMBER:**

THIS IS TO CERTIFY THAT THE POLICIES OF INSURANCE LISTED BELOW HAVE BEEN ISSUED TO THE INSURED NAMED ABOVE FOR THE POLICY PERIOD INDICATED. NOTWITHSTANDING ANY REQUIREMENT, TERM OR CONDITION OF ANY CONTRACT OR OTHER DOCUMENT WITH RESPECT TO WHICH THIS CERTIFICATE MAY BE ISSUED OR MAY PERTAIN, THE INSURANCE AFFORDED BY THE POLICIES DESCRIBED HEREIN IS SUBJECT TO ALL THE TERMS, EXCLUSIONS AND CONDITIONS OF SUCH POLICIES. LIMITS SHOWN MAY HAVE BEEN REDUCED BY PAID CLAIMS.

INSR LTR	TYPE OF INSURANCE	ADDL INSD	SUBR WVD	POLICY NUMBER	POLICY EFF (MM/DD/YYYY)	POLICY EXP (MM/DD/YYYY)	LIMITS	
	COMMERCIAL GENERAL LIABILITY ☐ CLAIMS-MADE ☐ OCCUR GEN'L AGGREGATE LIMIT APPLIES PER: ☐ POLICY ☐ PRO-JECT ☐ LOC ☐ OTHER:						EACH OCCURRENCE	$
							DAMAGE TO RENTED PREMISES (Ea occurrence)	$
							MED EXP (Any one person)	$
							PERSONAL & ADV INJURY	$
							GENERAL AGGREGATE	$
							PRODUCTS - COMP/OP AGG	$
								$
A	**AUTOMOBILE LIABILITY** ☒ ANY AUTO ☐ OWNED AUTOS ONLY ☒ SCHEDULED AUTOS ☐ HIRED AUTOS ONLY ☐ NON-OWNED AUTOS ONLY	Y	N	972718516	08/31/2025	08/31/2026	COMBINED SINGLE LIMIT (Ea accident)	$ 1,000,000
							BODILY INJURY (Per person)	$
							BODILY INJURY (Per accident)	$
							PROPERTY DAMAGE (Per accident)	$
								$
	UMBRELLA LIAB ☐ OCCUR **EXCESS LIAB** ☐ CLAIMS-MADE ☐ DED ☐ RETENTION $						EACH OCCURRENCE	$
							AGGREGATE	$
								$
	WORKERS COMPENSATION AND EMPLOYERS' LIABILITY Y/N ANYPROPRIETOR/PARTNER/EXECUTIVE OFFICER/MEMBEREXCLUDED? ☐ **(Mandatory in NH)** If yes, describe under DESCRIPTION OF OPERATIONS below	N / A					☐ PER STATUTE ☐ OTH-ER	
							E.L. EACH ACCIDENT	$
							E.L. DISEASE - EA EMPLOYEE	$
							E.L. DISEASE - POLICY LIMIT	$
A	See ACORD 101 for additional coverage details.	Y	N	972718516	08/31/2025	08/31/2026	$	

DESCRIPTION OF OPERATIONS / LOCATIONS / VEHICLES (ACORD 101, Additional Remarks Schedule, may be attached if more space is required)

CERTIFICATE HOLDER

City of St. Pete Beach
155 Corey Ave
St. Pete Beach, FL 33706

CANCELLATION

SHOULD ANY OF THE ABOVE DESCRIBED POLICIES BE CANCELLED BEFORE THE EXPIRATION DATE THEREOF, NOTICE WILL BE DELIVERED IN ACCORDANCE WITH THE POLICY PROVISIONS.

AUTHORIZED REPRESENTATIVE

Mark Pont

© 1988-2015 ACORD CORPORATION. All rights reserved.

AGENCY CUSTOMER ID: _____

LOC #: _____

ADDITIONAL REMARKS SCHEDULE

AGENCY Progressive Insurance	**NAMED INSURED** Free Agent Marine LLC 4807 Londonberry DR Tampa, FL 33647
POLICY NUMBER 972718516	
CARRIER Progressive Express Insurance Company	**NAIC CODE** 10193
	EFFECTIVE DATE: 08/31/2025

ADDITIONAL REMARKS

THIS ADDITIONAL REMARKS FORM IS A SCHEDULE TO ACORD FORM,

FORM NUMBER: 25 **FORM TITLE:** Certificate of Liability Insurance

Additional Coverages

Insurance coverage(s)	Limits
Personal Injury Protection	$10,000 w/$0 Ded - Named Insured Only

Description of Location/Vehicles/Special Items

Scheduled autos only

2016 NISSAN TITAN XD 1N6BA1F42GN505618

Comprehensive	$500 Ded
Collision	$500 Ded

Additional Information

City of St. Pete Beach is listed as an Additional Insured.

ACORD 101 (2008/01)

© 2008 ACORD CORPORATION. All rights reserved.

The ACORD name and logo are registered marks of ACORD

Form **W-9**

(Rev. March 2024)

Department of the Treasury

Internal Revenue Service

Request for Taxpayer Identification Number and Certification

Go to *www.irs.gov/FormW9* for instructions and the latest information.

Give form to the requester. Do not send to the IRS.

Before you begin. For guidance related to the purpose of Form W-9, see *Purpose of Form*, below.

Print or type. See ***Specific Instructions*** on page 3

1 Name of entity/individual. An entry is required. (For a sole proprietor or disregarded entity, enter the owner's name on line 1, and enter the business/disregarded entity's name on line 2.)

Free Agent Marine LLC

2 Business name/disregarded entity name, if different from above.

3a Check the appropriate box for federal tax classification of the entity/individual whose name is entered on line 1. Check only **one** of the following seven boxes.

☐ Individual/sole proprietor ☐ C corporation ☒ S corporation ☐ Partnership ☐ Trust/estate

☒ LLC. Enter the tax classification (C = C corporation, S = S corporation, P = Partnership) S

Note: Check the "LLC" box above and, in the entry space, enter the appropriate code (C, S, or P) for the tax classification of the LLC, unless it is a disregarded entity. A disregarded entity should instead check the appropriate box for the tax classification of its owner.

☐ Other (see instructions)

4 Exemptions (codes apply only to certain entities, not individuals; see instructions on page 3):

Exempt payee code (if any)

Exemption from Foreign Account Tax Compliance Act (FATCA) reporting code (if any)

(Applies to accounts maintained outside the United States.)

3b If on line 3a you checked "Partnership" or "Trust/estate," or checked "LLC" and entered "P" as its tax classification, and you are providing this form to a partnership, trust, or estate in which you have an ownership interest, check this box if you have any foreign partners, owners, or beneficiaries. See instructions . . . . . ☐

5 Address (number, street, and apt. or suite no.). See instructions.

4807 Londonderry Drive

Requester's name and address (optional)

6 City, state, and ZIP code

Tampa, FL 33647

7 List account number(s) here (optional)

Part I Taxpayer Identification Number (TIN)

Enter your TIN in the appropriate box. The TIN provided must match the name given on line 1 to avoid backup withholding. For individuals, this is generally your social security number (SSN). However, for a resident alien, sole proprietor, or disregarded entity, see the instructions for Part I, later. For other entities, it is your employer identification number (EIN). If you do not have a number, see *How to get a TIN*, later.

Social security number

			-			-				

or

Employer identification number

8	8	-	2	5	9	8	6	6	9

Note: If the account is in more than one name, see the instructions for line 1. See also *What Name and Number To Give the Requester* for guidelines on whose number to enter.

Part II Certification

Under penalties of perjury, I certify that:

1. The number shown on this form is my correct taxpayer identification number (or I am waiting for a number to be issued to me); and
2. I am not subject to backup withholding because (a) I am exempt from backup withholding, or (b) I have not been notified by the Internal Revenue Service (IRS) that I am subject to backup withholding as a result of a failure to report all interest or dividends, or (c) the IRS has notified me that I am no longer subject to backup withholding; and
3. I am a U.S. citizen or other U.S. person (defined below); and
4. The FATCA code(s) entered on this form (if any) indicating that I am exempt from FATCA reporting is correct.

Certification instructions. You must cross out item 2 above if you have been notified by the IRS that you are currently subject to backup withholding because you have failed to report all interest and dividends on your tax return. For real estate transactions, item 2 does not apply. For mortgage interest paid, acquisition or abandonment of secured property, cancellation of debt, contributions to an individual retirement arrangement (IRA), and, generally, payments other than interest and dividends, you are not required to sign the certification, but you must provide your correct TIN. See the instructions for Part II, later.

Here **Signature of U.S. person** *Michael Cardona Jr* **Date** 01/30/2026

Sign

General Instructions

Section references are to the Internal Revenue Code unless otherwise noted.

Future developments. For the latest information about developments related to Form W-9 and its instructions, such as legislation enacted after they were published, go to *www.irs.gov/FormW9*.

What's New

Line 3a has been modified to clarify how a disregarded entity completes this line. An LLC that is a disregarded entity should check the appropriate box for the tax classification of its owner. Otherwise, it should check the "LLC" box and enter its appropriate tax classification.

New line 3b has been added to this form. A flow-through entity is required to complete this line to indicate that it has direct or indirect foreign partners, owners, or beneficiaries when it provides the Form W-9 to another flow-through entity in which it has an ownership interest. This change is intended to provide a flow-through entity with information regarding the status of its indirect foreign partners, owners, or beneficiaries, so that it can satisfy any applicable reporting requirements. For example, a partnership that has any indirect foreign partners may be required to complete Schedules K-2 and K-3. See the Partnership Instructions for Schedules K-2 and K-3 (Form 1065).

Purpose of Form

An individual or entity (Form W-9 requester) who is required to file an information return with the IRS is giving you this form because they must obtain your correct taxpayer identification number (TIN), which may be your social security number (SSN), individual taxpayer identification number (ITIN), adoption taxpayer identification number (ATIN), or employer identification number (EIN), to report on an information return the amount paid to you, or other amount reportable on an information return. Examples of information returns include, but are not limited to, the following.

- Form 1099-INT (interest earned or paid).
- Form 1099-DIV (dividends, including those from stocks or mutual funds).
- Form 1099-MISC (various types of income, prizes, awards, or gross proceeds).
- Form 1099-NEC (nonemployee compensation).
- Form 1099-B (stock or mutual fund sales and certain other transactions by brokers).
- Form 1099-S (proceeds from real estate transactions).
- Form 1099-K (merchant card and third-party network transactions).
- Form 1098 (home mortgage interest), 1098-E (student loan interest), and 1098-T (tuition).
- Form 1099-C (canceled debt).
- Form 1099-A (acquisition or abandonment of secured property).

Use Form W-9 only if you are a U.S. person (including a resident alien), to provide your correct TIN.

Caution: If you don't return Form W-9 to the requester with a TIN, you might be subject to backup withholding. See *What is backup withholding*, later.

By signing the filled-out form, you:

1. Certify that the TIN you are giving is correct (or you are waiting for a number to be issued);
2. Certify that you are not subject to backup withholding; or
3. Claim exemption from backup withholding if you are a U.S. exempt payee; and
4. Certify to your non-foreign status for purposes of withholding under chapter 3 or 4 of the Code (if applicable); and
5. Certify that FATCA code(s) entered on this form (if any) indicating that you are exempt from the FATCA reporting is correct. See *What Is FATCA Reporting*, later, for further information.

Note: If you are a U.S. person and a requester gives you a form other than Form W-9 to request your TIN, you must use the requester's form if it is substantially similar to this Form W-9.

Definition of a U.S. person. For federal tax purposes, you are considered a U.S. person if you are:

- An individual who is a U.S. citizen or U.S. resident alien;
- A partnership, corporation, company, or association created or organized in the United States or under the laws of the United States;
- An estate (other than a foreign estate); or
- A domestic trust (as defined in Regulations section 301.7701-7).

Establishing U.S. status for purposes of chapter 3 and chapter 4 withholding. Payments made to foreign persons, including certain distributions, allocations of income, or transfers of sales proceeds, may be subject to withholding under chapter 3 or chapter 4 of the Code (sections 1441–1474). Under those rules, if a Form W-9 or other certification of non-foreign status has not been received, a withholding agent, transferee, or partnership (payor) generally applies presumption rules that may require the payor to withhold applicable tax from the recipient, owner, transferor, or partner (payee). See Pub. 515, Withholding of Tax on Nonresident Aliens and Foreign Entities.

The following persons must provide Form W-9 to the payor for purposes of establishing its non-foreign status.

- In the case of a disregarded entity with a U.S. owner, the U.S. owner of the disregarded entity and not the disregarded entity.
- In the case of a grantor trust with a U.S. grantor or other U.S. owner, generally, the U.S. grantor or other U.S. owner of the grantor trust and not the grantor trust.
- In the case of a U.S. trust (other than a grantor trust), the U.S. trust and not the beneficiaries of the trust.

See Pub. 515 for more information on providing a Form W-9 or a certification of non-foreign status to avoid withholding.

Foreign person. If you are a foreign person or the U.S. branch of a foreign bank that has elected to be treated as a U.S. person (under Regulations section 1.1441-1(b)(2)(iv) or other applicable section for chapter 3 or 4 purposes), do not use Form W-9. Instead, use the appropriate Form W-8 or Form 8233 (see Pub. 515). If you are a qualified foreign pension fund under Regulations section 1.897(l)-1(d), or a partnership that is wholly owned by qualified foreign pension funds, that is treated as a non-foreign person for purposes of section 1445 withholding, do not use Form W-9. Instead, use Form W-8EXP (or other certification of non-foreign status).

Nonresident alien who becomes a resident alien. Generally, only a nonresident alien individual may use the terms of a tax treaty to reduce or eliminate U.S. tax on certain types of income. However, most tax treaties contain a provision known as a saving clause. Exceptions specified in the saving clause may permit an exemption from tax to continue for certain types of income even after the payee has otherwise become a U.S. resident alien for tax purposes.

If you are a U.S. resident alien who is relying on an exception contained in the saving clause of a tax treaty to claim an exemption from U.S. tax on certain types of income, you must attach a statement to Form W-9 that specifies the following five items.

1. The treaty country. Generally, this must be the same treaty under which you claimed exemption from tax as a nonresident alien.
2. The treaty article addressing the income.
3. The article number (or location) in the tax treaty that contains the saving clause and its exceptions.
4. The type and amount of income that qualifies for the exemption from tax.
5. Sufficient facts to justify the exemption from tax under the terms of the treaty article.

Example. Article 20 of the U.S.-China income tax treaty allows an exemption from tax for scholarship income received by a Chinese student temporarily present in the United States. Under U.S. law, this student will become a resident alien for tax purposes if their stay in the United States exceeds 5 calendar years. However, paragraph 2 of the first Protocol to the U.S.-China treaty (dated April 30, 1984) allows the provisions of Article 20 to continue to apply even after the Chinese student becomes a resident alien of the United States. A Chinese student who qualifies for this exception (under paragraph 2 of the first Protocol) and is relying on this exception to claim an exemption from tax on their scholarship or fellowship income would attach to Form W-9 a statement that includes the information described above to support that exemption.

If you are a nonresident alien or a foreign entity, give the requester the appropriate completed Form W-8 or Form 8233.

Backup Withholding

What is backup withholding? Persons making certain payments to you must under certain conditions withhold and pay to the IRS 24% of such payments. This is called "backup withholding." Payments that may be subject to backup withholding include, but are not limited to, interest, tax-exempt interest, dividends, broker and barter exchange transactions, rents, royalties, nonemployee pay, payments made in settlement of payment card and third-party network transactions, and certain payments from fishing boat operators. Real estate transactions are not subject to backup withholding.

You will not be subject to backup withholding on payments you receive if you give the requester your correct TIN, make the proper certifications, and report all your taxable interest and dividends on your tax return.

Payments you receive will be subject to backup withholding if:

1. You do not furnish your TIN to the requester;
2. You do not certify your TIN when required (see the instructions for Part II for details);
3. The IRS tells the requester that you furnished an incorrect TIN;
4. The IRS tells you that you are subject to backup withholding because you did not report all your interest and dividends on your tax return (for reportable interest and dividends only); or
5. You do not certify to the requester that you are not subject to backup withholding, as described in item 4 under "*By signing the filledout form*" above (for reportable interest and dividend accounts opened after 1983 only).

Certain payees and payments are exempt from backup withholding. See *Exempt payee code*, later, and the separate Instructions for the Requester of Form W-9 for more information.

See also *Establishing U.S. status for purposes of chapter 3 and chapter 4 withholding*, earlier.

What Is FATCA Reporting?

The Foreign Account Tax Compliance Act (FATCA) requires a participating foreign financial institution to report all U.S. account holders that are specified U.S. persons. Certain payees are exempt from FATCA reporting. See *Exemption from FATCA reporting code*, later, and the Instructions for the Requester of Form W-9 for more information.

Updating Your Information

You must provide updated information to any person to whom you claimed to be an exempt payee if you are no longer an exempt payee and anticipate receiving reportable payments in the future from this person. For example, you may need to provide updated information if you are a C corporation that elects to be an S corporation, or if you are no longer tax exempt. In addition, you must furnish a new Form W-9 if the name or TIN changes for the account, for example, if the grantor of a grantor trust dies.

Penalties

Failure to furnish TIN. If you fail to furnish your correct TIN to a requester, you are subject to a penalty of $50 for each such failure unless your failure is due to reasonable cause and not to willful neglect.

Civil penalty for false information with respect to withholding. If you make a false statement with no reasonable basis that results in no backup withholding, you are subject to a $500 penalty.

Criminal penalty for falsifying information. Willfully falsifying certifications or affirmations may subject you to criminal penalties including fines and/or imprisonment.

Misuse of TINs. If the requester discloses or uses TINs in violation of federal law, the requester may be subject to civil and criminal penalties.

Specific Instructions

Line 1

You must enter one of the following on this line; **do not** leave this line blank. The name should match the name on your tax return.

If this Form W-9 is for a joint account (other than an account maintained by a foreign financial institution (FFI)), list first, and then circle, the name of the person or entity whose number you entered in Part I of Form W-9. If you are providing Form W-9 to an FFI to document a joint account, each holder of the account that is a U.S. person must provide a Form W-9.

- **Individual.** Generally, enter the name shown on your tax return. If you have changed your last name without informing the Social Security Administration (SSA) of the name change, enter your first name, the last name as shown on your social security card, and your new last name. **Note for ITIN applicant:** Enter your individual name as it was entered on your Form W-7 application, line 1a. This should also be the same as the name you entered on the Form 1040 you filed with your application.
- **Sole proprietor.** Enter your individual name as shown on your Form 1040 on line 1. Enter your business, trade, or "doing business as" (DBA) name on line 2.
- **Partnership, C corporation, S corporation, or LLC, other than a disregarded entity.** Enter the entity's name as shown on the entity's tax return on line 1 and any business, trade, or DBA name on line 2.
- **Other entities.** Enter your name as shown on required U.S. federal tax documents on line 1. This name should match the name shown on the charter or other legal document creating the entity. Enter any business, trade, or DBA name on line 2.
- **Disregarded entity.** In general, a business entity that has a single owner, including an LLC, and is not a corporation, is disregarded as an entity separate from its owner (a disregarded entity). See Regulations section 301.7701-2(c)(2). A disregarded entity should check the appropriate box for the tax classification of its owner. Enter the owner's name on line 1. The name of the owner entered on line 1 should never be a disregarded entity. The name on line 1 should be the name shown on the income tax return on which the income should be reported. For example, if a foreign LLC that is treated as a disregarded entity for U.S. federal tax purposes has a single owner that is a U.S. person, the U.S. owner's name is required to be provided on line 1. If the direct owner of the entity is also a disregarded entity, enter the first owner that is not disregarded for federal tax purposes. Enter the disregarded entity's name on line 2. If the owner of the disregarded entity is a foreign person, the owner must complete an appropriate Form W-8 instead of a Form W-9. This is the case even if the foreign person has a U.S. TIN.

Line 2

If you have a business name, trade name, DBA name, or disregarded entity name, enter it on line 2.

Line 3a

Check the appropriate box on line 3a for the U.S. federal tax classification of the person whose name is entered on line 1. Check only one box on line 3a.

IF the entity/individual on line 1 is a(n) . . .	THEN check the box for . . .
• Corporation	Corporation.
• Individual or • Sole proprietorship	Individual/sole proprietor.

• LLC classified as a partnership for U.S. federal tax purposes or • LLC that has filed Form 8832 or 2553 electing to be taxed as a corporation	Limited liability company and enter the appropriate tax classification: P = Partnership, C = C corporation, or S = S corporation.
• Partnership	Partnership.
• Trust/estate	Trust/estate.

Line 3b

Check this box if you are a partnership (including an LLC classified as a partnership for U.S. federal tax purposes), trust, or estate that has any foreign partners, owners, or beneficiaries, and you are providing this form to a partnership, trust, or estate, in which you have an ownership interest. You must check the box on line 3b if you receive a Form W-8 (or documentary evidence) from any partner, owner, or beneficiary establishing foreign status or if you receive a Form W-9 from any partner, owner, or beneficiary that has checked the box on line 3b.

Note: A partnership that provides a Form W-9 and checks box 3b may be required to complete Schedules K-2 and K-3 (Form 1065). For more information, see the Partnership Instructions for Schedules K-2 and K-3 (Form 1065).

If you are required to complete line 3b but fail to do so, you may not receive the information necessary to file a correct information return with the IRS or furnish a correct payee statement to your partners or beneficiaries. See, for example, sections 6698, 6722, and 6724 for penalties that may apply.

Line 4 Exemptions

If you are exempt from backup withholding and/or FATCA reporting, enter in the appropriate space on line 4 any code(s) that may apply to you.

Exempt payee code.

- Generally, individuals (including sole proprietors) are not exempt from backup withholding.
- Except as provided below, corporations are exempt from backup withholding for certain payments, including interest and dividends.
- Corporations are not exempt from backup withholding for payments made in settlement of payment card or third-party network transactions.
- Corporations are not exempt from backup withholding with respect to attorneys' fees or gross proceeds paid to attorneys, and corporations that provide medical or health care services are not exempt with respect to payments reportable on Form 1099-MISC.

The following codes identify payees that are exempt from backup withholding. Enter the appropriate code in the space on line 4.

1—An organization exempt from tax under section 501(a), any IRA, or a custodial account under section 403(b)(7) if the account satisfies the requirements of section 401(f)(2).

2—The United States or any of its agencies or instrumentalities.

3—A state, the District of Columbia, a U.S. commonwealth or territory, or any of their political subdivisions or instrumentalities.

4—A foreign government or any of its political subdivisions, agencies, or instrumentalities.

5—A corporation.

6—A dealer in securities or commodities required to register in the United States, the District of Columbia, or a U.S. commonwealth or territory.

7—A futures commission merchant registered with the Commodity Futures Trading Commission.

8—A real estate investment trust.

9—An entity registered at all times during the tax year under the Investment Company Act of 1940.

10—A common trust fund operated by a bank under section 584(a).

11—A financial institution as defined under section 581. 12—A middleman known in the investment community as a nominee or custodian.

13—A trust exempt from tax under section 664 or described in section 4947.

The following chart shows types of payments that may be exempt from backup withholding. The chart applies to the exempt payees listed above, 1 through 13.

IF the payment is for . . .	THEN the payment is exempt for . . .
• Interest and dividend payments	All exempt payees except for 7.
• Broker transactions	Exempt payees 1 through 4 and 6 through 11 and all C corporations. S corporations must not enter an exempt payee code because they are exempt only for sales of noncovered securities acquired prior to 2012.
• Barter exchange transactions and patronage dividends	Exempt payees 1 through 4.
• Payments over $600 required to be reported and direct sales over $5,000[1]	Generally, exempt payees 1 through 5.[2]
• Payments made in settlement of payment card or third-party network transactions	Exempt payees 1 through 4.

[1] See Form 1099-MISC, Miscellaneous Information, and its instructions.

[2] However, the following payments made to a corporation and reportable on Form 1099-MISC are not exempt from backup withholding: medical and health care payments, attorneys' fees, gross proceeds paid to an attorney reportable under section 6045(f), and payments for services paid by a federal executive agency. **Exemption from FATCA reporting code.** The following codes identify payees that are exempt from reporting under FATCA. These codes apply to persons submitting this form for accounts maintained outside of the United States by certain foreign financial institutions. Therefore, if you are only submitting this form for an account you hold in the United States, you may leave this field blank. Consult with the person requesting this form if you are uncertain if the financial institution is subject to these requirements. A requester may indicate that a code is not required by providing you with a Form W-9 with "Not Applicable" (or any similar indication) entered on the line for a FATCA exemption code. A—An organization exempt from tax under section 501(a) or any individual retirement plan as defined in section 7701(a)(37).

B—The United States or any of its agencies or instrumentalities. C—A state, the District of Columbia, a U.S. commonwealth or territory, or any of their political subdivisions or instrumentalities.

D—A corporation the stock of which is regularly traded on one or more established securities markets, as described in Regulations section 1.1472-1(c)(1)(i).

E—A corporation that is a member of the same expanded affiliated group as a corporation described in Regulations section 1.1472-1(c)(1)(i).

F—A dealer in securities, commodities, or derivative financial instruments (including notional principal contracts, futures, forwards, and options) that is registered as such under the laws of the United States or any state.

G—A real estate investment trust.

H—A regulated investment company as defined in section 851 or an entity registered at all times during the tax year under the Investment Company Act of 1940.

I—A common trust fund as defined in section 584(a).

J—A bank as defined in section 581.

K—A broker.

L—A trust exempt from tax under section 664 or described in section 4947(a)(1).

M—A tax-exempt trust under a section 403(b) plan or section 457(g) plan.

Note: You may wish to consult with the financial institution requesting this form to determine whether the FATCA code and/or exempt payee code should be completed.

Line 5

Enter your address (number, street, and apartment or suite number). This is where the requester of this Form W-9 will mail your information returns. If this address differs from the one the requester already has on file, enter "NEW" at the top. If a new address is provided, there is still a chance the old address will be used until the payor changes your address in their records.

Line 6

Enter your city, state, and ZIP code.

Part I. Taxpayer Identification Number (TIN)

Enter your TIN in the appropriate box. If you are a resident alien and you do not have, and are not eligible to get, an SSN, your TIN is your IRS ITIN. Enter it in the entry space for the Social security number. If you do not have an ITIN, see *How to get a TIN* below.

If you are a sole proprietor and you have an EIN, you may enter either your SSN or EIN.

If you are a single-member LLC that is disregarded as an entity separate from its owner, enter the owner's SSN (or EIN, if the owner has one). If the LLC is classified as a corporation or partnership, enter the entity's EIN.

Note: See *What Name and Number To Give the Requester*, later, for further clarification of name and TIN combinations.

How to get a TIN. If you do not have a TIN, apply for one immediately. To apply for an SSN, get Form SS-5, Application for a Social Security Card, from your local SSA office or get this form online at *www.SSA.gov*. You may also get this form by calling 800-772-1213. Use Form W-7, Application for IRS Individual Taxpayer Identification Number, to apply for an ITIN, or Form SS-4, Application for Employer Identification Number, to apply for an EIN. You can apply for an EIN online by accessing the IRS website at *www.irs.gov/EIN*. Go to *www.irs.gov/Forms* to view, download, or print Form W-7 and/or Form SS-4. Or, you can go to *www.irs.gov/OrderForms* to place an order and have Form W-7 and/or Form SS-4 mailed to you within 15 business days.

If you are asked to complete Form W-9 but do not have a TIN, apply for a TIN and enter "Applied For" in the space for the TIN, sign and date the form, and give it to the requester. For interest and dividend payments, and certain payments made with respect to readily tradable instruments, you will generally have 60 days to get a TIN and give it to the requester before you are subject to backup withholding on payments. The 60-day rule does not apply to other types of payments. You will be subject to backup withholding on all such payments until you provide your TIN to the requester.

Note: Entering "Applied For" means that you have already applied for a TIN or that you intend to apply for one soon. See also *Establishing U.S. status for purposes of chapter 3 and chapter 4 withholding*, earlier, for when you may instead be subject to withholding under chapter 3 or 4 of the Code.

Caution: A disregarded U.S. entity that has a foreign owner must use the appropriate Form W-8.

Part II. Certification

To establish to the withholding agent that you are a U.S. person, or resident alien, sign Form W-9. You may be requested to sign by the withholding agent even if item 1, 4, or 5 below indicates otherwise.

For a joint account, only the person whose TIN is shown in Part I should sign (when required). In the case of a disregarded entity, the person identified on line 1 must sign. Exempt payees, see *Exempt payee code*, earlier.

Signature requirements. Complete the certification as indicated in items 1 through 5 below.

1. Interest, dividend, and barter exchange accounts opened before 1984 and broker accounts considered active during 1983. You must give your correct TIN, but you do not have to sign the certification.

2. Interest, dividend, broker, and barter exchange accounts opened after 1983 and broker accounts considered inactive during 1983. You must sign the certification or backup withholding will apply. If you are subject to backup withholding and you are merely providing your correct TIN to the requester, you must cross out item 2 in the certification before signing the form.

3. Real estate transactions. You must sign the certification. You may cross out item 2 of the certification.

4. Other payments. You must give your correct TIN, but you do not have to sign the certification unless you have been notified that you have previously given an incorrect TIN. "Other payments" include payments made in the course of the requester's trade or business for rents, royalties, goods (other than bills for merchandise), medical and health care services (including payments to corporations), payments to a nonemployee for services, payments made in settlement of payment card and third-party network transactions, payments to certain fishing boat crew members and fishermen, and gross proceeds paid to attorneys (including payments to corporations).

5. Mortgage interest paid by you, acquisition or abandonment of secured property, cancellation of debt, qualified tuition program payments (under section 529), ABLE accounts (under section 529A), IRA, Coverdell ESA, Archer MSA or HSA contributions or distributions, and pension distributions. You must give your correct TIN, but you do not have to sign the certification.

What Name and Number To Give the Requester

For this type of account:	Give name and SSN of:
1. Individual	The individual
2. Two or more individuals (joint account) other than an account maintained by an FFI	The actual owner of the account or, if combined funds, the first individual on the account[1]
3. Two or more U.S. persons (joint account maintained by an FFI)	Each holder of the account
4. Custodial account of a minor (Uniform Gift to Minors Act)	The minor[2]
5. a. The usual revocable savings trust (grantor is also trustee)	The grantor-trustee[1]
b. So-called trust account that is not a legal or valid trust under state law	The actual owner[1]
6. Sole proprietorship or disregarded entity owned by an individual	The owner[3]
7. Grantor trust filing under Optional Filing Method 1 (see Regulations section 1.671-4(b)(2)(i)(A))**	The grantor*
For this type of account:	**Give name and EIN of:**
8. Disregarded entity not owned by an individual	The owner
9. A valid trust, estate, or pension trust	Legal entity[4]
10. Corporation or LLC electing corporate status on Form 8832 or Form 2553	The corporation
11. Association, club, religious, charitable, educational, or other tax-exempt organization	The organization
12. Partnership or multi-member LLC	The partnership
13. A broker or registered nominee	The broker or nominee
14. Account with the Department of Agriculture in the name of a public entity (such as a state or local government, school district, or prison) that receives agricultural program payments	The public entity
15. Grantor trust filing Form 1041 or under the Optional Filing Method 2, requiring Form 1099 (see Regulations section 1.671-4(b)(2)(i)(B))**	The trust

[1] List first and circle the name of the person whose number you furnish. If only one person on a joint account has an SSN, that person's number must be furnished.

[2] Circle the minor's name and furnish the minor's SSN.

[3] You must show your individual name on line 1, and enter your business or DBA name, if any, on line 2. You may use either your SSN or EIN (if you have one), but the IRS encourages you to use your SSN.

[4] List first and circle the name of the trust, estate, or pension trust. (Do not furnish the TIN of the personal representative or trustee unless the legal entity itself is not designated in the account title.) * **Note:** The grantor must also provide a Form W-9 to the trustee of the trust.

** For more information on optional filing methods for grantor trusts, see the Instructions for Form 1041.

Note: If no name is circled when more than one name is listed, the number will be considered to be that of the first name listed.

Secure Your Tax Records From Identity Theft

Identity theft occurs when someone uses your personal information, such as your name, SSN, or other identifying information, without your permission to commit fraud or other crimes. An identity thief may use your SSN to get a job or may file a tax return using your SSN to receive a refund.

To reduce your risk:

- Protect your SSN,
- Ensure your employer is protecting your SSN, and
- Be careful when choosing a tax return preparer.

If your tax records are affected by identity theft and you receive a notice from the IRS, respond right away to the name and phone number printed on the IRS notice or letter.

If your tax records are not currently affected by identity theft but you think you are at risk due to a lost or stolen purse or wallet, questionable credit card activity, or a questionable credit report, contact the IRS Identity Theft Hotline at 800-908-4490 or submit Form 14039.

For more information, see Pub. 5027, Identity Theft Information for Taxpayers.

Victims of identity theft who are experiencing economic harm or a systemic problem, or are seeking help in resolving tax problems that have not been resolved through normal channels, may be eligible for Taxpayer Advocate Service (TAS) assistance. You can reach TAS by calling the TAS toll-free case intake line at 877-777-4778 or TTY/TDD 800-829-4059.

Protect yourself from suspicious emails or phishing schemes. Phishing is the creation and use of email and websites designed to mimic legitimate business emails and websites. The most common act is sending an email to a user falsely claiming to be an established legitimate enterprise in an attempt to scam the user into surrendering private information that will be used for identity theft.

The IRS does not initiate contacts with taxpayers via emails. Also, the IRS does not request personal detailed information through email or ask taxpayers for the PIN numbers, passwords, or similar secret access information for their credit card, bank, or other financial accounts. If you receive an unsolicited email claiming to be from the IRS, forward this message to *phishing@irs.gov*. You may also report misuse of the IRS name, logo, or other IRS property to the Treasury Inspector General for Tax Administration (TIGTA) at 800-366-4484. You can forward suspicious emails to the Federal Trade Commission at *spam@uce.gov* or report them at *www.ftc.gov/complaint*. You can contact the FTC at *www.ftc.gov/idtheft* or 877-IDTHEFT (877-438-4338). If you have been the victim of identity theft, see *www.IdentityTheft.gov* and Pub. 5027.

Go to *www.irs.gov/IdentityTheft* to learn more about identity theft and how to reduce your risk.

Privacy Act Notice

Section 6109 of the Internal Revenue Code requires you to provide your correct TIN to persons (including federal agencies) who are required to file information returns with the IRS to report interest, dividends, or certain other income paid to you; mortgage interest you paid; the acquisition or abandonment of secured property; the cancellation of debt; or contributions you made to an IRA, Archer MSA, or HSA. The person collecting this form uses the information on the form to file information returns with the IRS, reporting the above information. Routine uses of this information include giving it to the Department of Justice for civil and criminal litigation and to cities, states, the District of Columbia, and U.S. commonwealths and territories for use in administering their laws. The information may also be disclosed to other countries under a treaty, to federal and state agencies to enforce civil and criminal laws, or to federal law enforcement and intelligence agencies to combat terrorism. You must provide your TIN whether or not you are required to file a tax return. Under section 3406, payors must generally withhold a percentage of taxable interest, dividends, and certain other payments to a payee who does not give a TIN to the payor. Certain penalties may also apply for providing false or fraudulent information.

E-Verify proof

My Company Profile

Company Information

Company Name
Free Agent Marine LLC

Doing Business As (DBA) Name

Company ID
2998609

Enrollment Date
Apr 08, 2026

Employer Identification Number (EIN)
882598669

Unique Entity Identifier (UEI)
HCFEZ31F8XW7

DUNS Number
099580253

Total Number of Employees
1 to 4

NAICS Code
237

Sector
Construction

Subsector
Heavy and Civil Engineering Construction

EXHIBIT "D"

Conditional Federal/Grant-Funded Contract Addendum

(Place Conditional Federal/Grant-Funded Contract Addendum behind this page)

EXHIBIT "D"
CONDITIONAL FEDERAL/GRANT-FUNDED CONTRACT ADDENDUM

1. Applicability

1.1 This Exhibit applies only if activated under Section 25 of the Agreement or under a Task Order. If not activated, this Exhibit is reserved and has no operative effect.
1.2 If activated, this Exhibit supplements the Agreement and applies to the federally funded or grant-funded Work only. Contractor shall comply with all applicable requirements of the federal award, grant agreement, pass-through entity, program rules, and applicable law.
1.3 The City may provide additional award-specific clauses, certifications, forms, wage determinations, reporting requirements, or flow-down provisions. Contractor shall comply with such requirements as a condition of performing the affected Work and receiving payment from the applicable funding source.

2. Federal Award and Grant Information

Federal/Grant Program: [insert]
Federal Awarding Agency: [insert]
Pass-Through Entity: [insert, if applicable]
Assistance Listing Number: [insert, if applicable]
Federal Award Identification Number: [insert, if applicable]
Award or Disaster Declaration Date: [insert, if applicable]
Project Number: [insert]
Special Award Conditions: [insert or attach]

3. Remedies for Breach

For contracts exceeding the simplified acquisition threshold, Contractor acknowledges that the City may exercise all administrative, contractual, legal, and equitable remedies available under the Contract Documents and applicable law if Contractor violates or breaches contract terms. Remedies may include withholding payment, requiring correction, suspension of Work, termination, procurement from alternate sources, damages, sanctions, and any other appropriate remedy.

4. Termination for Cause and Convenience

For contracts in excess of $10,000, the City may terminate the federally funded or grant-funded Work for cause or convenience as provided in the Agreement. The notice of termination will identify the effective date and the manner of termination. Contractor shall be paid only for authorized Work satisfactorily performed before the effective date of termination, subject to documentation, offsets, allowable cost requirements, and applicable grant rules.

5. Equal Employment Opportunity

Except as otherwise provided under 41 C.F.R. Part 60, if the Work is a federally assisted construction contract as defined in 41 C.F.R. § 60-1.3, Contractor shall comply with the equal opportunity clause in 41 C.F.R. § 60-1.4(b), which is incorporated by reference as if fully set forth

RESERVED

herein, and shall include the required clause in covered subcontracts and purchase orders.

6. Davis-Bacon Act and Copeland Anti-Kickback Act

When required by federal program legislation, all prime construction contracts in excess of $2,000 must include compliance with the Davis-Bacon Act, 40 U.S.C. §§ 3141-3148, as supplemented by Department of Labor regulations at 29 C.F.R. Part 5. If Davis-Bacon applies, Contractor shall pay laborers and mechanics at rates not less than the applicable wage determination, pay wages not less than once per week, submit certified payrolls if required, and comply with all applicable labor standards.
If Davis-Bacon applies, Contractor shall also comply with the Copeland "Anti-Kickback" Act, 40 U.S.C. § 3145, as supplemented by 29 C.F.R. Part 3, and shall not induce any person employed in the construction, completion, or repair of public work to give up any part of compensation to which the person is entitled. Contractor shall report suspected or reported violations to the City.

7. Contract Work Hours and Safety Standards Act

Where applicable, for contracts in excess of $100,000 that involve the employment of mechanics or laborers, Contractor shall comply with 40 U.S.C. §§ 3702 and 3704, as supplemented by Department of Labor regulations at 29 C.F.R. Part 5. Contractor shall compute wages based on a standard 40-hour workweek and shall compensate covered workers at not less than one and one-half times the basic rate of pay for hours worked in excess of 40 hours in a workweek. No laborer or mechanic shall be required to work under unsanitary, hazardous, or dangerous conditions. These requirements do not apply to purchases of supplies, materials, or articles ordinarily available on the open market, or to contracts for transportation or transmission of intelligence.

8. Rights to Inventions

If the federal award meets the definition of "funding agreement" under 37 C.F.R. § 401.2(a), and the Work involves substitution of parties, assignment, or performance of experimental, developmental, or research work under that funding agreement, Contractor shall comply with 37 C.F.R. Part 401 and any implementing regulations issued by the awarding agency.

9. Clean Air Act and Federal Water Pollution Control Act

For contracts and subgrants exceeding $150,000, Contractor shall comply with all applicable standards, orders, and regulations issued pursuant to the Clean Air Act, 42 U.S.C. §§ 7401-7671q, and the Federal Water Pollution Control Act, 33 U.S.C. §§ 1251-1387. Contractor shall report each violation to the City, and the City will report violations as required to the federal awarding agency and the appropriate EPA regional office. Contractor shall include these requirements in each covered subcontract exceeding $150,000.

10. Debarment and Suspension

Contractor shall comply with Executive Orders 12549 and 12689 and 2 C.F.R. Part 180. Contractor shall not enter into covered transactions with parties listed on the governmentwide exclusions in the System for Award Management. Contractor shall verify that Contractor, its principals, and its affiliates are not excluded or disqualified and shall include this requirement in lower-tier covered

RESERVED

transactions.

11. Byrd Anti-Lobbying Amendment

For awards exceeding $100,000, Contractor shall comply with the Byrd Anti-Lobbying Amendment, 31 U.S.C. § 1352. Contractor shall certify that it has not and will not use federal appropriated funds to pay any person or organization for influencing or attempting to influence an officer or employee of an agency, a member of Congress, an officer or employee of Congress, or an employee of a member of Congress in connection with obtaining a federal contract, grant, or other covered award. Contractor shall disclose lobbying with non-federal funds as required and shall require each lower tier to make the same certification and disclosure.

12. Procurement of Recovered Materials

Contractor shall comply with 2 C.F.R. § 200.323 and Section 6002 of the Solid Waste Disposal Act, as amended by the Resource Conservation and Recovery Act, to the extent applicable. Contractor shall procure designated items containing the highest percentage of recovered materials practicable, consistent with competition and performance requirements, when the purchase price exceeds the applicable threshold or the value of the quantity acquired during the preceding fiscal year exceeded the applicable threshold. Contractor shall also procure solid waste management services in a manner that maximizes energy and resource recovery and shall support the City's affirmative procurement program where applicable.

13. Domestic Preferences for Procurements

As appropriate and to the extent consistent with law, Contractor shall comply with 2 C.F.R. § 200.322 by providing a preference for the purchase, acquisition, or use of goods, products, or materials produced in the United States, including iron, aluminum, steel, cement, and other manufactured products, when the Work is performed under a federal award.

14. Prohibition on Certain Telecommunications and Video Surveillance Equipment or Services

Contractor shall comply with 2 C.F.R. § 200.216 and shall not obligate or expend federal funds to procure, obtain, extend, renew, or enter into a contract to procure or obtain covered telecommunications equipment or services as a substantial or essential component of any system or as critical technology as part of any system. Contractor shall include this prohibition in applicable subcontracts and purchase orders.

15. Build America, Buy America

If the Work is an infrastructure project funded by a federal financial assistance program subject to the Build America, Buy America Act, Contractor shall comply with all applicable domestic content procurement preference requirements for iron, steel, manufactured products, and construction materials permanently incorporated into the project, unless a waiver applies. Contractor shall provide certifications, documentation, and product information required by the City, funding agency, or pass-through entity.

16. Small and Minority Businesses, Women's Business Enterprises, Veteran-Owned Businesses,

RESERVED

and Labor Surplus Area Firms

Contractor shall take the affirmative steps required by 2 C.F.R. § 200.321 to assure that small businesses, minority businesses, women's business enterprises, veteran-owned businesses, and labor surplus area firms are used when possible, including, as applicable, placing such businesses on solicitation lists, soliciting them when they are potential sources, dividing requirements when economically feasible, establishing delivery schedules that encourage participation, using appropriate assistance organizations, and requiring subcontractors to take the same affirmative steps.

17. Bonding Requirements for Federal Construction or Facility Improvement Contracts

For construction or facility improvement contracts or subcontracts exceeding the simplified acquisition threshold, Contractor shall comply with the bonding requirements in 2 C.F.R. § 200.326 when the federal award requires such bonding, including bid guarantee, performance bond, and payment bond requirements unless the federal agency or pass-through entity determines that the City's bonding policy and requirements adequately protect the federal interest.

18. Access to Records; Retention

Contractor shall provide the City, the federal awarding agency, the pass-through entity, the Comptroller General of the United States, and their authorized representatives access to any documents, papers, records, and other materials that are directly pertinent to the federal or grant-funded Work for the purpose of making audits, examinations, excerpts, and transcriptions. Contractor shall retain records for the period required by 2 C.F.R. Part 200, the award terms, the Agreement, and applicable law, whichever is longer.

19. No Obligation by Federal Government

The federal government is not a party to this Agreement or any Task Order and is not subject to any obligations or liabilities to the City, Contractor, or any other party arising from the Agreement or Work.

20. Program Fraud and False or Fraudulent Statements

Contractor acknowledges that 31 U.S.C. Chapter 38 and other federal laws concerning fraud, false claims, and false statements may apply to Contractor's actions pertaining to federally funded or grant-funded Work. Contractor shall not submit false, fictitious, fraudulent, or misleading claims, certifications, invoices, records, or statements.

21. Additional Award-Specific Terms

If the federal awarding agency, pass-through entity, grant agreement, disaster assistance program, or other funding source requires additional clauses, certifications, forms, reporting, wage determinations, environmental/historic preservation conditions, civil rights provisions, procurement certifications, or other requirements, such requirements are incorporated into the affected Task Order upon written notice by the City. Contractor shall execute additional documents reasonably required by the City to document compliance.

RESERVED

CITY COMMISSION MEETING
CITY OF ST. PETE BEACH
COMMISSION CHAMBERS

Agenda Report

Agenda Title Name: Authorize the City Manager to execute a Services Agreement with See Dive LLC for Commercial Diving Services in the amount not to exceed $50,000 annually.

Action Request: Motion to authorize the City Manager to execute a Services Agreement with See Dive LLC for Commercial Diving Services in the amount not to exceed $50,000 annually.

Strategic Objective: Reliable Infrastructure

Date: June 23, 2026

Prepared By: Camden Mills, Public Services Director

Through: Frances Robustelli, City Manager

Summary of Issue: The City publicly advertised a Request for Bid (RFB) for qualified full-service commercial diving Contractors with experience in a wide range of applications. Eleven (11) responsive sealed bids were received on April 8, 2026. Dive-Tech International Inc., Free Agent Marine LLC, and See Dive LLC, were determined to be the lowest responsive and responsible bidders meeting all City qualification requirements.

The contract provides not-to-exceed unit prices for a qualified dive team, and all related diving equipment required to assist the City of St. Pete Beach with the cleaning, inspection, repair and maintenance of tide check valves, stormwater outfalls, manatee grates, subaqueous pipelines, piers, piles, and bulkheads. Services include:

- Debris Removal from Valve, Pipe, Endwalls, and Pit
- Marine Growth Removal from Valve, Pipe, Endwalls, and Pit
- Maintenance of Manatee Grates
- Written and Video Reports of condition per cycle
- Repair and Replacement of in-line and outfall-end type Tidal Check Valves
- Hydraulic Dredging

Work will be issued by task order on an as-needed

basis, in an amount not to exceed $50,000 per year, subject to budgeted funds.

The initial agreement term is three (3) years, with up to two (2) additional one (1) year renewal options upon mutual agreement and annual appropriation.

Funding: 403.5380.546000 – Stormwater R&M Equipment ($287,996.80 remaining balance)

401.5350.546000 – Wastewater R&M Equipment ($102,791.25 remaining balance)

Attachments: 1. SEE DIVE LLC Agreement Signed

CITY OF ST. PETE BEACH, FLORIDA
SERVICES AGREEMENT

Commercial Diving Services

This is an Agreement (the "Agreement") entered into by and between the **CITY OF ST. PETE BEACH** (hereinafter "City") and (**SEE DIVE L.L.C. (D.B.A.) Underwater Asset Management**). (hereinafter "Contractor"). The City and Contractor together shall be referred to as the "parties."

WHEREAS, The City properly issued a Request for Bids, attached and incorporated hereto as Exhibit "B" and the City Commission authorized the selection of Contractor at its June 23, 2026, public hearing.

WHEREAS, City desires to purchase from Contractor the services described in this Agreement.

WHEREAS, Contractor is in the business of providing the services described herein, and has submitted an appropriate proposal to the City to provide the same.

WHEREAS, this Agreement has been properly approved by the appropriate authority of the City and the Contractor.

NOW, THEREFORE, upon the mutual covenants contained herein, and other good and valuable considerations, the sufficiency of which is hereby acknowledged, the parties hereto hereby agree to the following:

1. Recitals. The foregoing recitals are true and correct and incorporated herein by reference.

2. Standard Contract Addendum. The attached Standard Contract Addendum, which contains all the Florida Statutorily required provisions applicable to this Agreement, is attached hereto as Exhibit "A" and its provisions modify and supplement this Agreement.

3. Scope of Services. The Contractor must perform all work for the City required by the contract documents as set forth below:

a. Contractor will furnish all labor, materials, and equipment necessary as indicated in the Request for Bids (Exhibit "B") in the amount of Not To Exceed $50,000.

b. Contractor must supervise the workforce to ensure that all workers conduct themselves and perform their work in a safe and professional manner. Contractor must comply with all OSHA safety rules and regulations in the operation of equipment and in the performance of the work. Contractor must at all times have a competent field supervisor on the job site to enforce these policies and procedures at the Contractor's expense.

c. Contractor will provide the City with seventy-two (72) hours written notice prior to the beginning of work under this Agreement and prior to any schedule change with the exception of changes caused by inclement weather.

d. Contractor must comply with any and all Federal, State, and local laws and regulations now in effect, or hereinafter enacted during the term of this Agreement, which are applicable to the Contractor, its employees, agents or subcontractors, if any, with respect to the work and services described herein. The Contractor further warrants that there has been no violation of copyrights or patent rights either in the United States of America or in foreign countries in connection with the work of the contract.

e. Contractor warrants to the City that all goods and materials furnished under the contract will be new unless otherwise specified and that contractor possesses good, clear, and marketable title to said goods and there are no pending liens, claims, or encumbrances whatsoever against said goods. All work not conforming to these requirements, including substitutions not properly approved and authorized may be considered defective. Contractor further warrants that all goods, materials and workmanship furnished, whether furnished by the Contractor or its subcontractors and suppliers, will comply with the specifications, drawings and other descriptions supplied or adopted. Last, Contractor warrants all material and workmanship for a minimum of (1) year from date of project completion and acceptancy by the City. If within one (1) year after acceptance by the City, or within such larger period of time as may be prescribed by law any of the work is found to be defective or not in accordance with the contract documents, the Contractor will, after receipt of a written notice from the City to do so, promptly correct the work.

4. Damages. Time is of the essence in the performance of this Agreement. City shall be entitled to liquidated damages in the amount of $500 per day, for each day after the date set forth in paragraph 10, that Contractor has failed to properly and completely deliver all goods or provide all service specified herein. The Contractor specifically acknowledges that the foregoing sum is reasonable and does not constitute a penalty.

5. Remedies.

   a. Damages. The City reserves the right to recover any ascertainable actual damages incurred as a result of the failure of the Contractor to perform in accordance with the requirements of this Agreement, or for losses sustained by the city resultant from the Contractor's failure to perform in accordance with the requirements of this Agreement.

   b. Correction of Work. If, in the judgment of the City, work provided by the Contractor does not conform to the requirements of this Agreement, or if the work exhibits poor workmanship, the city reserves the right to require that the Contractor correct all deficiencies in the work to bring the work into conformance without additional cost to the City, and/or replace any personnel who fail to perform in accordance with the requirements of this Agreement. The City is the sole judge of non-conformance and the quality of workmanship.

6. Waiver of Liens. Prior to final payment of the Contract Sum, a final waiver of lien must be submitted by all suppliers, subcontractors, and/or Contractors who worked on the project that is the subject of this Agreement.

7. Warranties.

a. Warranty of Title. Contractor warrants to the City that all goods and materials furnished under the contract will be new unless otherwise specified and that Contractor possesses good, clear, and marketable title to said goods and there are no pending liens, claims, or encumbrances whatsoever against said goods. All work not conforming to these requirements, including substitutions not properly approved and authorized may be considered defective.

b. Warranty of Specifications. The Contractor warrants that all goods, materials, workmanship furnished, whether by the Contractor or its subcontractors and suppliers, will comply with the specifications, drawings and other descriptions supplied or adopted.

c. Warranty of Merchantability. The Contractor warrants all material and workmanship for a minimum of one (1) year from date of project completion and acceptance by the City. If within one (1) year after acceptance by the city, or within such larger period of time as may be described by law any of the work is found to be defective or not in accordance with the contract documents, the Contractor must after receipt of a written notice from the City to do so, promptly correct the work unless the City has previously given the Contractor a written acceptance of such condition.

8. Term. This Agreement will remain in effect for a period of (3) three years with (2) two, (1) one-year extensions from the Effective Date.

9. Effective date. The "Effective Date" of this Agreement shall be the date this Agreement has been executed by all parties.

10. Termination. This Agreement may be canceled by the City when:
   a. Sufficient funds are not available to continue its full and faithful performance to the Agreement.
   b. Sub-standard or non-performance of Agreement.
   c. The City wishes to terminate the Agreement at any time and for any reason, upon giving thirty (30) days prior written notice to the Contractor.

11. Fiscal Non-funding. If funds for the requested services described herein are not appropriated via the annual budget adoption process, the City reserves the right to cancel the Agreement immediately upon written notice to the Contractor.

12. Non-Exclusivity. Contractor acknowledges that the City may enter into agreements with other consultants or may have its own employees complete the work for services similar to the services that are subject to this Agreement.

13. Compensation. Upon Contractor's satisfactory full performance of the services or in accordance with the payment schedule provided in the attached proposal, City shall pay Contractor, as full consideration for services provided in this Agreement..

14. Insurance. To the extent that this Agreement requires Contractor to provide any services of any kind, Contractor and all of Contractor's subcontractors shall maintain public liability insurance in a combined single limit for bodily injury and property damage in the amount of not less than $1,000,000.00, satisfactory to the City Manager, naming the City as an additionally named insured

and providing coverage up through and including the final performance of any services provided herein. Contractor and all of Contractor's subcontractors shall maintain in full force and effect a policy of worker's compensation insurance for all of Contractor's employees in accordance with applicable state and federal law. Said insurance coverage shall include employer's liability with a single limit of $100,000.00 per accident or occurrence. Contractor shall present City with a certificate for all the foregoing insurance, at the time of executing this Agreement and at such other times requested by the City.

The Contractor waives all rights against the City, its consultants, separate contractors, if any, and any of its subcontractors, agents and employees, for any and all damages caused to the extent covered by insurance described herein and obtained pursuant to this Section or other property insurance applicable to the services and product provided under this Agreement. The City shall require of the Contractor, Contractor's consultants, separate contractors, if any, and the subcontractors, sub-subcontractors, agents and employees of any of them, by appropriate agreements, written where legally required for validity, similar waivers each in favor of other parties enumerated herein. The policies shall provide such waiver of subrogation by endorsement otherwise. A waiver of subrogation shall be effective as to a person or entity even though that person or entity would otherwise have a duty of indemnification, contractual or otherwise, did not pay the insurance premium directly or indirectly, and whether or not the person or entity had an insurable interest in the property damaged.

15. Indemnification. In consideration of the payment of ten dollars as part of the compensation described herein, such sum being specifically found by Contractor to be sufficient consideration for this indemnification, Contractor shall indemnify, defend and hold the City harmless for itself, its past/present/future elected and appointed officials, its employees, agents and assigns, from and against any and all losses, claims, damages, suits, actions, liability or demands, including attorneys' fees and costs of litigation through all appellate proceedings, arising from the performance or non-performance of this Agreement, whether caused in part by the City or not, and in connection with violations of copyrighted or trademarked materials used by Contractor, loss of life, bodily or personal injury, or property damage, including loss of use thereof, directly or indirectly caused by, resulting from, arising out of or occurring in connection with the operations of the Contractor or its officers, employees, agents, subcontractors, or independent Contractors, excepting only such loss of life, bodily or personal injury, or property damage solely attributable to the gross negligence or willful misconduct of the City or its elected or appointed officials and employees. In any and all claims against the City, or any of their agents or employees by any employee of the Contractor any subcontractor, anyone directly or indirectly employed by any of them or anyone for whose acts any of them may be liable, the indemnification obligation under this paragraph is not limited in any way by any limitation in this amount or type of damages compensation or benefits payable by or for the Contractor or any subcontractor under Workers' Compensation Acts, Disability Benefit Acts or other Employee Benefit Acts. Nothing contained herein is intended nor may it be construed, to waive City's rights and immunities under the common law or Section 768.28, Florida Statutes, as amended from time to time; nor will anything included herein be construed as consent to be sued by any third parties in any matter arising out of this Agreement. To the extent considered necessary by the Contract Administrator and the City Attorney, any sums due Contractor under this Agreement may be retained by the City until all of the City's claims subject to this indemnification obligation have been settled or otherwise resolved,

and any amount withheld is not subject to payment of interest by the City. The above provisions will survive the termination or expiration of this Agreement and will pertain to any occurrence during the term of this Agreement, even though the claim may be made after the termination or expiration hereof.

16. Discriminatory Vendor List. Contractor hereby acknowledges its continuous duty to disclose to the City if the Contractor or any of its affiliates, as defined by Section 287.134 (1)(a), Florida Statutes, are placed on the Discriminatory Vendor List. Pursuant to Section 287-134 (2)(a), Florida Statutes: "An entity or affiliate who has been placed on the discriminatory vendor list may not submit a bid, proposal, or reply on a contract to a public entity; may not submit a bid or proposal, or reply on a contract with a public entity for the construction or repair of a public building or public work; may not submit bids, proposals, or replies on leases of real property to a public entity; may not be awarded or perform work as a contractor, supplier, subcontractor, or consultant under a contract with any public entity; and may not transact business with any public entity."

17. Independent Contractor. This Agreement does not create an employee/employer relationship between the parties. It is the intent of the parties that the Contractor is an independent contractor under this Agreement and not the City's employee for any purposes, including but not limited to, the application of the Fair Labor Standards Act minimum wage and overtime payments, Federal Insurance Contribution Act, the Social Security Act, the Federal Unemployment Tax Act, the provisions of the Internal Revenue Code, the State Worker's Compensation Act, and the State Unemployment Insurance law. The Contractor will retain sole and absolute discretion in the judgment of the manner and means of carrying out Contractor's activities and responsibilities hereunder provided, further that administrative procedures applicable to services rendered under this Agreement will be those of Contractor, which policies of Contractor will not conflict with City, State, or United States policies, rules, or regulations relating to the use of Contractor's funds provided for herein. The contractor agrees that it is a separate and independent enterprise from the City, that it had full opportunity to find other business, that it has made its own investment in it business, and that it will utilize a high level of skill necessary to perform the work. This Agreement must not be construed as creating any joint employment relationship between the Contractor and the City and the City will not be liable for any obligation incurred by Contractor, including but not limited to unpaid minimum wages and/or overtime premiums.

18. Audit Rights. The City reserves the right to audit the records of the Contractor for the commodities and/or serves provided under the contract at any time during the performance and term of the contract and for a period of five (5) years after completion and acceptance by the City. If required by the City, the Contractor agrees to submit to an audit by an independent certified public accountant selected by the City. The Contractor must allow the City to inspect, examine and review the records of the Contractor in relation to this Agreement at any an all times during normal business hours during the term of the Agreement.

19. Exhibits. The following Exhibits shall be attached, incorporated, and made a part of this Agreement:

a. Standard Contract Addendum (Exhibit "A")
b. Request for Bid/Proposal (Exhibit "B")

c. Vendor Bid/Proposal (Exhibit "C")
d. Conditional Federal/Grant-Funded Contract Addendum (Exhibit "D")

20. Notices. All notices sent pursuant to this Agreement shall be given in writing via certified mail or overnight courier and shall be delivered to the following addresses:

As to Contractor:
See Dive LLC (DBA) Underwater
Asset Management
905 Candlebrook Ln.
Brooksville, FL 34601

As to City:
City Manager
City of St. Pete Beach
155 Corey Avenue
St. Pete Beach, FL 33706

With Copy To:
kevin@operationsuam.com

With Copy To:
attorney@stpetebeach.org

21. Conflicts and Severability. To the extent that any terms in the attached proposal conflict with the terms of this Agreement, the terms of this Agreement shall control and supersede such conflicting terms in the attached proposal, to the extent of such conflict. If any section, part of section, paragraph, clause, phrase, or word of this Agreement is declared invalid, the remaining provisions of this Agreement shall not be affected.

22. Amendments. This document and exhibits embody the entire Agreement of the parties. There are no promises, terms, conditions, or representations binding on either party hereto, other than those contained herein; and this document shall supersede all previous communications, representations, and/or agreements between the parties hereto, whether written or oral. This Agreement shall not be modified by any oral statement, communication, Agreement, course of conduct, or by anything other than a writing signed by the parties. This Agreement may be amended or modified only in writing signed by all parties hereto.

23. Jurisdiction, Venue, Attorney Fees. This Agreement shall be governed and construed according to the laws of Florida, and venue for any action arising herefrom shall be in Pinellas County, Florida. The prevailing party in any action to enforce or interpret this Agreement shall be entitled to reasonable attorney's fees incurred through all appellate proceedings.

24. Assignment. This Agreement shall be binding upon the parties, their successors, assigns, and legal representatives. Contractor shall not assign or otherwise transfer any of the rights or duties under this Agreement, without the express written consent of the City.

25. Counterparts. This Agreement may be executed and delivered in any number of counterparts, each of which so executed and delivered shall be deemed to be an original and all of which shall constitute one and the same instrument. Facsimile, documents executed, scanned and transmitted electronically and electronic signatures shall be deemed original signatures for purposes of this Agreement and all matters related thereto, with such facsimile, scanned and electronic signatures having the same legal effect as original signatures.

26. Authority. Contractor hereby acknowledges that the person executing this Agreement on

behalf of Contractor has the full authority to do so and to bind Contractor to the terms hereof.

IN WITNESS WHEREOF, the Parties have executed this Agreement on the day and year set forth below.

Under penalties of perjury, and pursuant to Sec. 92.525, Fla. Stat., Contractor declares that Contractor has read the Section 15 of the Standard Contract Addendum, Exhibit "A", and that the facts stated in it are true.

SEE DIVE L.L.C. (D.B.A.) Underwater Asset Management	**City of St. Pete Beach:**
Signature: Kevin Austin	Signature: _____
By: Kevin Austin	By: Frances Robustelli
Its: President	Its: City Manager
Date: 05/22/2026	Date: _____
APPROVED AS TO FORM AND LEGAL SUFFICIENCY:	ATTEST:
_____	_____
Ralf Brookes City Attorney	Renee Rose City Clerk

EXHIBIT "A"

Standard Contract Addendum

(Place Standard Form Addendum behind this page)

CITY OF ST. PETE BEACH, FLORIDA
STANDARD CONTRACT ADDENDUM

THIS STANDARD CONTRACT ADDENDUM is made and entered into this _____ day of _____, 2026, by and between the CITY OF ST. PETE BEACH, a Florida municipality, hereinafter referred to as the "City", and _____, hereinafter referred to as "Contractor", concerning that certain agreement dated the ____ day of _____, 2026 ("Agreement") and titled _____.

WITNESSETH:

WHEREAS, Section 119.0701, Fla. Stat., requires that certain public agency contracts must include certain statutorily required provisions concerning the contractor's compliance for Florida's Public Records Act; and

WHEREAS, Section 768.28, Fla. Stat., sets forth certain mandatory limitations on indemnification and liability for Florida public agencies; and

WHEREAS, Florida law requires that public agency contracts be subject to non-appropriation and thereby contingent upon appropriation during the public agency's statutorily mandated annual budget approval process; and

WHEREAS, Section 448.095, Fla. Stat., imposes certain obligations on public agencies with regard to the use of the E-Verify system by their contractors and subcontractors; and

WHEREAS, Section 287.133 and 287.135, Fla. Stat., provides restrictions on local governments contracting with companies that are on certain Scrutinized Companies lists or convicted vendor list; and

WHEREAS, additional terms required by Sections 282.3185(5) and (6) Fla. Stat. related to data management and Section 287.05701 Fla. Stat. related to social government and corporate activism are also added by virtue of this Addendum; and

WHEREAS, Section 286.101, Florida Statutes contains a list of "foreign countries of concern" including, the People's Republic of China, the Russian Federation, the Islamic Republic of Iran, the Democratic People's Republic of Korea, the Republic of Cuba, the Venezuelan regime of Nicolás Maduro, or the Syrian Arab Republic, including any agency of or any other entity under significant control of such "foreign country of concern". Any entity that does business with a state agency or political subdivision must disclose certain of their dealings with those "foreign countries of concern" to the Florida Department of Financial Services; and

WHEREAS, Section 787.06(13), Fla. Stat. provides that when a contract is executed, renewed, or extended between a nongovernmental entity and a governmental entity, the nongovernmental entity must provide the governmental entity with an affidavit signed by an

officer or a representative of the nongovernmental entity under penalty of perjury attesting that the nongovernmental entity does not use coercion for labor or services as defined in such statute;

NOW, THEREFORE, in consideration of the covenants set forth herein, the parties agree to this addendum as follows:

1. Amendment. This Addendum hereby amends and supplements the terms of the Agreement. In the event of a conflict between the terms of the Agreement and terms of the Addendum, the terms of the Addendum shall prevail.

2. Public Records Compliance. Contractor agrees that, to the extent that it may "act on behalf" of the City within the meaning of Section 119.0701(1)(a), Florida Statutes in providing its services under this Agreement, it shall:

(a) Keep and maintain public records required by the public agency to perform the service.

(b) Upon request from the public agency's custodian of public records, provide the public agency with a copy of the requested records or allow the records to be inspected or copied within a reasonable time at a cost that does not exceed the cost provided in this chapter or as otherwise provided by law.

(c) Ensure that public records that are exempt or confidential and exempt from public records disclosure requirements are not disclosed except as authorized by law for the duration of the contract term and following completion of the contract if the contractor does not transfer the records to the public agency.

(d) Upon completion of the contract, transfer, at no cost, to the public agency all public records in possession of the contractor or keep and maintain public records required by the public agency to perform the service. If the contractor transfers all public records to the public agency upon completion of the contract, the contractor shall destroy any duplicate public records that are exempt or confidential and exempt from public records disclosure requirements. If the contractor keeps and maintains public records upon completion of the contract, the contractor shall meet all applicable requirements for retaining public records. All records stored electronically must be provided to the public agency, upon request from the City's custodian of public records, in a format that is compatible with the information technology systems of the City.

(e) Pursuant to Section 119.0701(2)(a), Fla. Stat., **IF THE CONTRACTOR HAS QUESTIONS REGARDING THE APPLICATION OF CHAPTER 119, FLORIDA STATUTES, TO THE CONTRACTOR'S DUTY TO PROVIDE PUBLIC RECORDS RELATING TO THIS AGREEMENT, CONTACT THE CUSTODIAN OF PUBLIC RECORDS AT:**

Renee Rose
City Clerk/Public Records Custodian
cityclerk@stpetebeach.org

Phone: 727-363-9220
155 Corey Avenue
St. Pete Beach, FL 33706
Fax: 727-541-8040

3. Public Records Compliance Indemnification. Contractor agrees to indemnify and hold the City harmless against any and all claims, damage awards, and causes of action arising from the contractor's failure to comply with the public records disclosure requirements of Section 119.07(1), Florida Statutes, or by contractor's failure to maintain public records that are exempt or confidential and exempt from the public records disclosure requirements, including, but not limited to, any third party claims or awards for attorneys' fees and costs arising therefrom. Contractor authorizes the public agency to seek declaratory, injunctive, or other appropriate relief against Contractor in Pinellas County Circuit Court on an expedited basis to enforce the requirements of this section.

4. Compliance/Consistency with Section 768.28, Fla. Stat. Any indemnification or agreement to defend or hold harmless by City specified in the Agreement shall not be construed as a waiver of City's sovereign immunity, and shall be limited to such indemnification and liability limits consistent with the requirements of Section 768.28, Fla. Stat. and subject to the procedural requirements set forth therein. Any other purported indemnification by City in the Agreement in derogation hereof shall be void and of no force or effect.

5. Non-appropriation. City's performance and obligation to pay under this Agreement is contingent upon an appropriation during the City's annual budget approval process. If funds are not appropriated for a fiscal year, then the Contractor shall be notified as soon as is practical by memorandum from the City Manager or designee that funds have not been appropriated for continuation of the Agreement, and the Agreement shall expire at the end of the fiscal year for which funding has been appropriated. The termination of the Agreement at fiscal year end shall be without penalty or expense to the City subject to the City paying all invoices for services rendered during the period the Agreement was funded by appropriations.

6. E-Verify Compliance. By entering into this Agreement, the Contractor is obligated to comply with the provisions of Section 448.095, Fla. Stat. "Employment Eligibility," as amended from time to time. This includes but is not limited to register with and use the E-Verify System to verify the work authorization status of all newly hired employees, and requiring all subcontractors to provide an affidavit to Contractor attesting that the subcontractor does not employ, contract with, or subcontract with, an unauthorized alien. Contractor agrees to maintain a copy of such affidavit for the duration of this Agreement. Failure to comply with this paragraph will result in the termination of this Agreement as provided in Section 448.095, Fla. Stat., as amended and Contractor will not be awarded a public contract for at least one (1) year after the date on which the Agreement was terminated. Contractor will also be liable for any additional costs to the City as a result of the termination of this Agreement in accordance with this paragraph. Contractor affirmatively states, under penalty of perjury, that in accordance with Section 448.095, Fla. Stat., Contractor is registered with and uses the E-Verify system to verify the work authorization status of all newly hired employees, that in accordance with such statute, Contractor requires from each of its subcontractors an affidavit stating that the subcontractor does not employ, contract with, or

subcontract with an unauthorized alien, and that Contractor is otherwise in compliance with Sections 448.09 and 448.095, Fla. Stat.

7. Compliance/Consistency with Scrutinized Companies Provisions of Florida Statutes. Section 287.135(2)(a), Fla. Stat., prohibits a company from bidding on, submitting a proposal for, or entering into or renewing a contract for goods or services of any amount if, at the time of contracting or renewal, the company is on the Scrutinized Companies that Boycott Israel List, created pursuant to Section 215.4725, Fla. Stat., or is engaged in a boycott of Israel. Section 287.135(2)(b), Fla. Stat., further prohibits a company from bidding on, submitting a proposal for, or entering into or renewing a contract for goods or services over one million dollars ($1,000,000) if, at the time of contracting or renewal, the company is on either the Scrutinized Companies with Activities in Sudan List or the Scrutinized Companies with Activities in the Iran Petroleum Energy Sector List, both created pursuant to section 215.473, Fla. Stat., or the company is engaged in business operations in Cuba or Syria. Contractor hereby certifies that Contractor is not listed on any of the following: (i) the Scrutinized Companies that Boycott Israel List, (ii) Scrutinized Companies with Activities in Sudan List, or (iii) the Scrutinized Companies with Activities in the Iran Petroleum Energy Sector List. Contractor further hereby certifies that Contractor is not engaged in a boycott of Israel or engaged in business operations in Cuba or Syria. Contractor understands that pursuant to section 287.135, Fla. Stat., the submission of a false certification may subject Contractor to civil penalties, attorney's fees, and/or costs. Contractor further understands that any contract with City for goods or services of any amount may be terminated at the option of City if Contractor (i) is found to have submitted a false certification, (ii) has been placed on the Scrutinized Companies that Boycott Israel List, or (iii) is engaged in a boycott of Israel. And, in addition to the foregoing, if the amount of the contract is one million dollars ($1,000,000) or more, the contract may be terminated at the option of City if the company is found to have submitted a false certification, has been placed on the Scrutinized Companies with Activities in Sudan List or the Scrutinized Companies with Activities in the Iran Petroleum Energy Sector List, or has been engaged in business operations in Cuba or Syria.

8. Disclosure Requirements for "Foreign Countries of Concern". CONTRACTOR shall comply with the disclosure requirements set forth is Section 286.101 (3) (a), Fla. Stat., which requires "Any entity that applies to a state agency or political subdivision for a grant or proposes having a contract value of $100,000 or more shall disclose to the state agency or political subdivision any current or prior interest of, any contract with, or any grant or gift received from a "foreign country of concern" if such interest, contract, grant or gift received from a "foreign country of concern" if such interest, contract, grant or gift has a value of $50,000 or more and such interest existed at any time or such contract, grant or gift was received or in force at any time during the previous five (5) years. Such disclosure shall contain the name and mailing address of the disclosing entity, the amount of the gift or the value of the interest disclosed, the applicable "foreign country of concern" and, if applicable the date of termination of the contract or interest, the date of receipt of the grant or gift and the name of the agent or controlled entity that is the source or interest holder. Within one (1) year before applying for any grant or proposing any contract, such entity must provide a copy of such disclosure to the Department of Financial Services". Pursuant to Section 286.101(7), Fla. Stat.: "In addition to any fine assessed under [section 286.101(7)(a), F.S.], a final order determining a third or subsequent violation by an entity other than a state agency or political subdivision shall automatically disqualify the entity from

eligibility for any grant or contract funded by a state agency or any political subdivision until such ineligibility is lifted by the Administration Commission for good cause."

9. Venue and Jurisdiction. Notwithstanding any of other provision to the contrary, this Agreement and the parties' actions under this Agreement shall be governed by and construed under the laws of the State of Florida, without reference to conflict of law principles. As a material condition of this Agreement, each Party hereby irrevocably and unconditionally: i) consents to submit and does submit to the jurisdiction of the Circuit Court in and for Pinellas County, Florida for any actions, suits or proceedings arising out of or relating to this Agreement. Both parties waive any right to file an action, suit or proceeding in Federal Court or remove any action, suit or proceeding to Federal Court.

10. Attorneys' Fees and Costs. Notwithstanding any of other provision to the contrary, if litigation ensues regarding this Agreement, each party hereto shall bear its own attorneys' fee and costs.

11. Public Entities Crime or Convicted Vendor List. Contractor agrees and assumes a continuous duty to disclose to the City if the Contractor or any of its affiliates as defined by Section 287.133(1)(a), Florida Statutes are placed on the Convicted Vendor List or the Antitrust Violator Vendor List maintained by the Florida Department of Management Services.

12. Data Management; Notice of Breach. Contractor shall cooperate with the City and provide timely incident reporting, response activities/fact gathering, public and agency notification, severity level assessment, after-action reports, etc., which the City must report in accordance with Sections 282.3185(5) & (6), Florida Statutes in the event of a data breach.

13. Environmental and Social Government and Corporate Activism. The City has not given preference or requested documentation from the Contractor based on Contractor's social, political or ideological interest. Contractor agrees to similarly not request documentation or give preference to any subcontractor based on the subcontractor's social, political or ideological interests.

14. Taxes. The City shall not be liable for any taxes and assessments imposed by a federal, state or local governmental agency to the extent that the City is exempt from same by Florida law, including but not limited to any sales or use tax.

15. No coercion for labor or services. The Contractor swears under penalty of perjury that the Contractor does not use coercion for labor or services as defined as follows:

"Coercion" means:

1. Using or threatening to use physical force against any person;
2. Restraining, isolating, or confining or threatening to restrain, isolate, or confine any person without lawful authority and against her or his will;
3. Using lending or other credit methods to establish a debt by any person when labor or services are pledged as a security for the debt, if the value of the labor or services as reasonably assessed is not applied toward the liquidation of the debt, the length and nature of the labor or services are not respectively limited and defined;

4. Destroying, concealing, removing, confiscating, withholding, or possessing any actual or purported passport, visa, or other immigration document, or any other actual or purported government identification document, of any person;

5. Causing or threatening to cause financial harm to any person;

6. Enticing or luring any person by fraud or deceit; or

7. Providing a controlled substance as outlined in Schedule I or Schedule II of Sec. 893.03, Fla. Stat. to any person for the purpose of exploitation of that person.

16. Force Majeure. The City reserves the right to suspend, modify or terminate this contract in the event of an act of god or act of man beyond the control of the parties, including but not limited to a hurricane, tropical storm, tornado, or other destructive weather event, flooding, pandemic, plague, war, armed conflict, domestic or foreign terrorism, riot, labor condition, state or federal governmental action, and catastrophic Internet disturbance, making performance inadvisable, economically impracticable, illegal, or impossible.

17. Additional Terms. Notwithstanding any of other provision to the contrary, the parties agree as follows:

A. None.

IN WITNESS WHEREOF, the parties hereto have executed and delivered this instrument on the days and year indicated below and the signatories below to bind the parties set forth herein.

Under penalties of perjury, and pursuant to Sec. 92.525, Fla. Stat., Contractor declares that Contractor has read the foregoing Section 15 above and that the facts stated in it are true.

Contractor:

Kevin Austin

Print Name: Kevin Austin

Title: President

Company: SEE DIVE L.L.C.

ATTEST:

Renee Rose, City Clerk

City of St. Pete Beach:

Frances Robustelli, City Manager

EXHIBIT "B"

Request for Bid/Proposal

(Place Request for Bid/Proposal behind this page)

155 Corey Avenue
St. Pete Beach, FL 33706-1839
www.stpetebeach.org

ADDENDUM 2

Commercial Diving Services

Issued 3/27/2026

*Sealed bids must be received by **9:00 AM on 04/08/2026** electronically via Bonfire. Bids received after the deadline will not be accepted. They will be publicly opened and read at **9:30 AM on 04/08/2026**. All bidders are invited to attend this bid Opening.*

Addendum 2 includes:

Questions and Answers

Questions and Answers:

1. Can you advise company licensing requirements - specifically that a Licensed Specialty Marine Contractor registered through the Florida DBPR is required for Award of this contract? Not required.

2. ADCI Consensus Standards Edition 6.5 for commercial dive operations is the safe standard adopted by the USCG and many agencies for underwater work. Will this standard be enforced for the services outlined in this solicitation? All diving operations shall comply with OSHA Commercial Diving Operations (29 CFR 1910 Subpart T). Diving operations shall also conform to ADCI Consensus Standards (latest edition) or an equivalent nationally recognized commercial diving standard, such as USACE EM 385-1-1, where applicable.

155 Corey Avenue
St. Pete Beach, FL 33706-1839
www.stpetebeach.org

ADDENDUM 1

Commercial Diving Services

Issued 3/23/2026

*Sealed bids must be received by **9:00 AM on 04/08/2026** electronically via Bonfire. Bids received after the deadline will not be accepted. They will be publicly opened and read at **9:30 AM on 04/08/2026**. All bidders are invited to attend this bid Opening.*

Addendum 1 includes:

Pre-bid Minutes
Questions and Answers

Optional - Pre-Bid Meeting Minutes
RFB: Commercial Diving Services
March 18, 2026
9:30 AM

Staff Members Present:
Sara Spain, Procurement Manager
John Taylor, Assistant Finance Director
Camden Mills, Public Services Director
Brian Peckins, Assistant Public Services Director
Dejan Milosevic, Project Manager
Michael Weaver, Infrastructure Operations Manager
Brian Gelock, Public Services
Kenneth Kosbab, Public Services
Ariana Wilson-Romo, Exec. Assistant City Clerk's Office

Others Present:

Name	***Company***	***Contact***
Helize Vivier	Triton Commercial Diving LLC	Helize.vivier@tcddive.com
Nathan Balkit	AC Plus Marine	projects@acplusmarine.com
Troy Caras	Isla Maritime	tcaras@islamaritime.com
Kyle Adkins	Ballard Marine Construction	Kyle.adkins@ballardmc.com
Imre Budinszki	Dive Tech International	Dive-tech@att.net
Levi Osborn	Ballard Marine Construction	Levi.osborn@ballardmc.com
Alan Christian	EnviroScience Inc.	achristian@enviroscienceinc.com
Zach Rogers	In Depth Inc.	zach@indepthservicesinc.com
Aileen Caras	Isla Maritime	acaras@islamaritime.com
Paul Overby	Dive Tech International	jpoverby@dive-tech.com
Eric Shelley	Isla Maritime	eshelley@islamaritime.com
Miles Upcavage	Did not provide	Did not provide

The meeting was called to order at 9:33 AM.

All attendees were present via Teams.

Ms. Spain briefly reviewed important dates and times which are as follows:

- Receipt of questions due 3/25 at 10AM
- Bids due 4/8 by 9AM
- Bid opening 4/8 at 9:30AM

She requested that any questions be submitted in writing to purchasing@stpetebeach.org. Questions will be answered via an addendum that will be posted to the City website and Bonfire.

Public Services Director Camden Mills summarized that this project will be for a maintenance contract managed by the City's operations team, with a goal to have on-call service for commercial diving.

There being no questions, the meeting was adjourned at 9:38 AM.

Questions and Answers:

1. Does this project require that the bidder hold a FL State General Contractor License? NO

2. Please provide the direct link for bid submission.
https://stpetebeach.bonfirehub.com/portal/?tab=openOpportunities

3. Can you please provide exact locations of the areas where the scheduled work is to be completed. Please see attached maps.

4. Can you please provide engineered drawings and associated structures where the dive team will work on the grates, valves, pipelines, etc… Please see link below.

5. Can the City clarify whether a Florida Certified or Registered Contractor's License is required for this contract, specifically for repair or replacement of tidal check valves, or if this work is considered maintenance under this RFB? Not required. Work is considered maintenance.

6. Can the City confirm that hydraulic dredging under this contract is limited to maintenance removal of sediment and does not include excavation or alteration of original design grade requiring contractor licensure? Yes, dredging under this contract is limited to maintenance removal of sediment.

7. Can the City provide clarification on how many locations require access by boat or barge versus land-based access, and whether work will typically be grouped to minimize mobilizations? Please see maps linked below; Majority of locations are accessible by land. Work will be grouped to minimize mobilizations.

8. Can the City confirm whether remotely operated vehicles (ROV) or sonar-based inspection methods may be utilized as a supplement to diver inspections, where appropriate, to enhance safety, efficiency, and documentation quality? Yes, that's acceptable.

9. Can the City provide a detailed asset list or map identifying the locations, approximate depths, pipe diameters, and typical conditions of the tide check valves, manatee grates, and outfalls included in this contract? Additionally, are any prior inspection reports or videos available for reference? See attached.

Check Valve Asbuilts.zip

TCV Maint - Bid Specs.xlsx

ST. PETE BEACH

KEY SHEET

Legend

Page Number

St. Pete Beach
The Sunset Capital of Florida

N

0 1,000 2,000 3,000 4,000 Feet

1 2 3 4 5 6 7 8 9 10 11 12 13 14 15 16 17 18 19 20 21

Kimley»Horn

ST. PETE BEACH STORM SYSTEM

Service Area 5 - Page 1

APRIL 2023

- Clean Out
- Control Valve
- Discharge Point
- Fitting
- Inlet
- Manhole
- Pump Station
- Gravity Main
- Abandoned Pipe

St. Pete Beach
The Sunset Capital of Florida

N

0 55 110 220 330 440
Feet

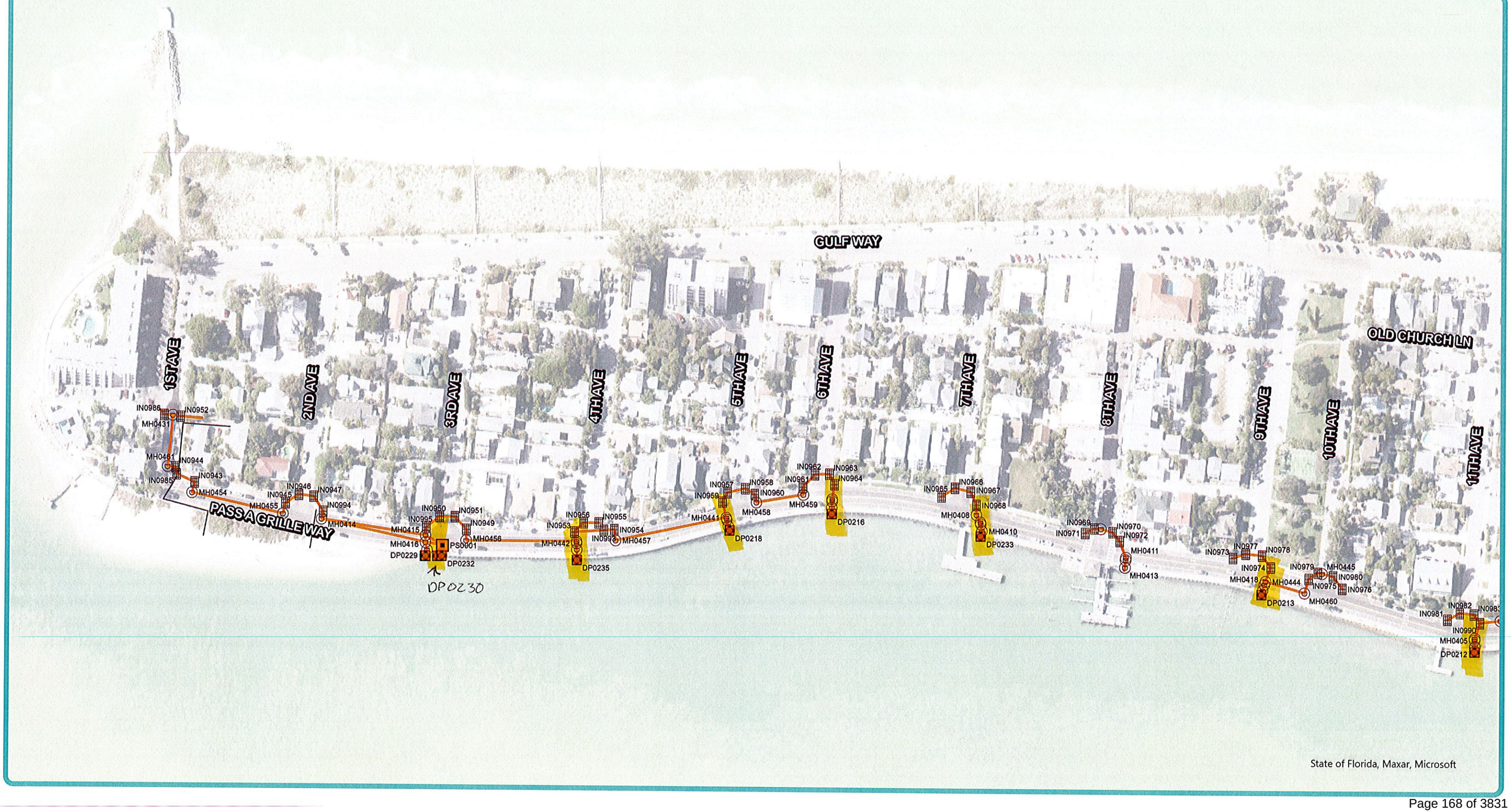

ST. PETE BEACH STORM SYSTEM

Service Area 4 - Page 2

APRIL 2023

- Clean Out
- Control Valve
- Discharge Point
- Fitting
- Inlet
- Manhole
- Pump Station
- Gravity Main
- Abandoned Pipe

St. Pete Beach
The Sunset Capital of Florida

N

0 55 110 220 330 440
Feet



ST. PETE BEACH STORM SYSTEM

Service Area 6 - Page 3

APRIL 2023

- Clean Out
- Control Valve
- Discharge Point
- Fitting
- Inlet
- Manhole
- Pump Station
- Gravity Main
- Abandoned Pipe

St. Pete Beach
The Sunset Capital of Florida

N

0 110 220 440 660 880
Feet



ST. PETE BEACH STORM SYSTEM

Service Area 3 - Page 4

APRIL 2023

- Clean Out
- Control Valve
- Discharge Point
- Fitting
- Inlet
- Manhole
- Pump Station
- Gravity Main
- Abandoned Pipe

St. Pete Beach
The Sunset Capital of Florida

N

0 55 110 220 330 440
Feet

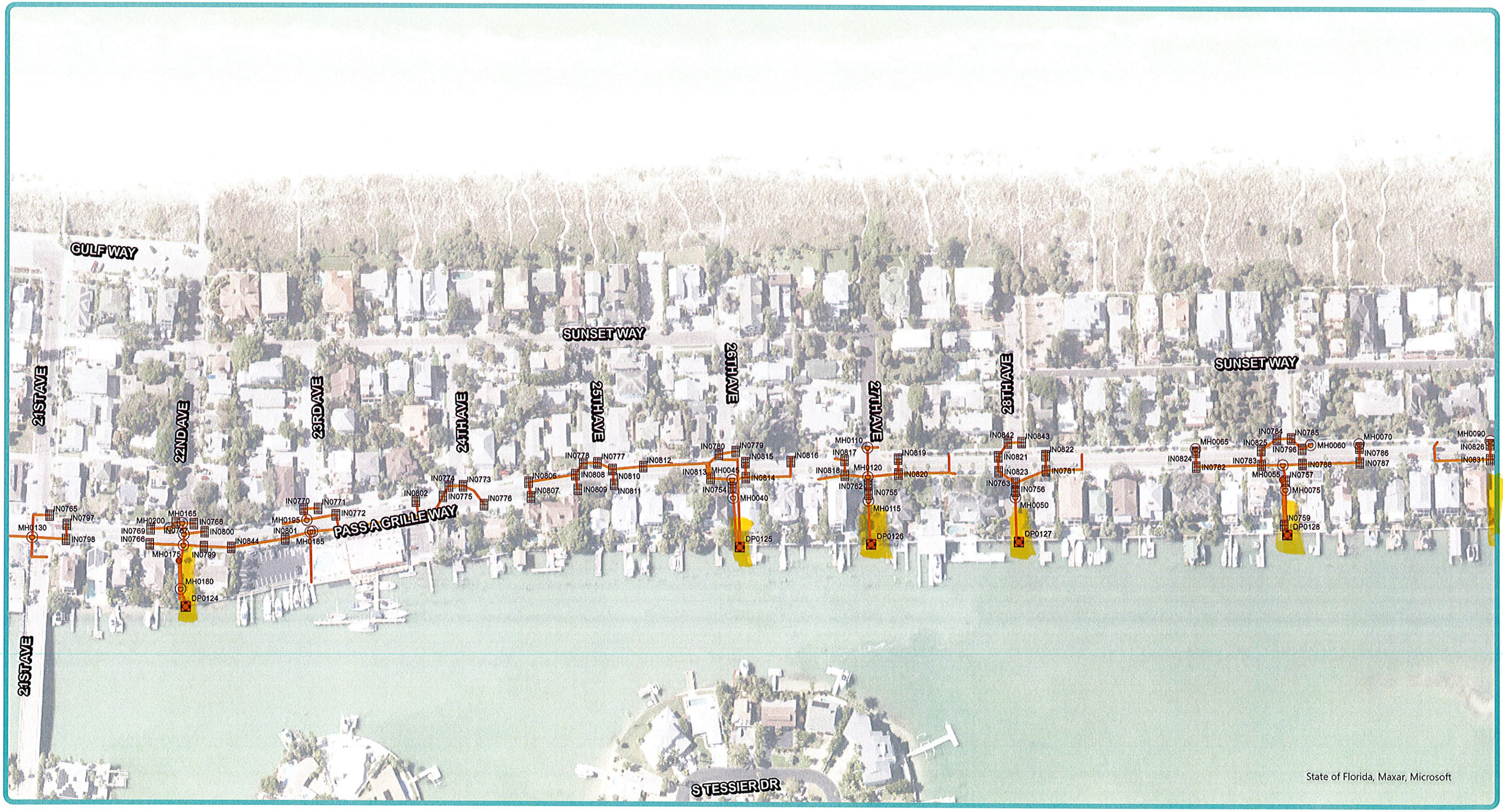

ST. PETE BEACH STORM SYSTEM

Service Area 3 - Page 5

APRIL 2023

- Clean Out
- Control Valve
- Discharge Point
- Fitting
- Inlet
- Manhole
- Pump Station
- Gravity Main
- Abandoned Pipe

St. Pete Beach
The Sunset Capital of Florida

N

0 110 220 440 660 880
Feet



ST. PETE BEACH STORM SYSTEM

Service Area 17 - Page 6

APRIL 2023

- Clean Out
- Control Valve
- Discharge Point
- Fitting
- Inlet
- Manhole
- Pump Station
- Gravity Main
- Abandoned Pipe

St. Pete Beach
The Sunset Capital of Florida

N

0 137.5275 550 825 1,100
Feet



ST. PETE BEACH STORM SYSTEM

Service Area 8 - Page 7

APRIL 2023

- Clean Out
- Control Valve
- Discharge Point
- Fitting
- Inlet
- Manhole
- Pump Station
- Gravity Main
- Abandoned Pipe

St. Pete Beach
The Sunset Capital of Florida

N

0 80 160 320 480 640
Feet



ST. PETE BEACH STORM SYSTEM

Service Area 7 - Page 8

APRIL 2023

- Clean Out
- Control Valve
- Discharge Point
- Fitting
- Inlet
- Manhole
- Pump Station
- Gravity Main
- Abandoned Pipe

St. Pete Beach
The Sunset Capital of Florida

N

0 110 220 440 660 880
Feet

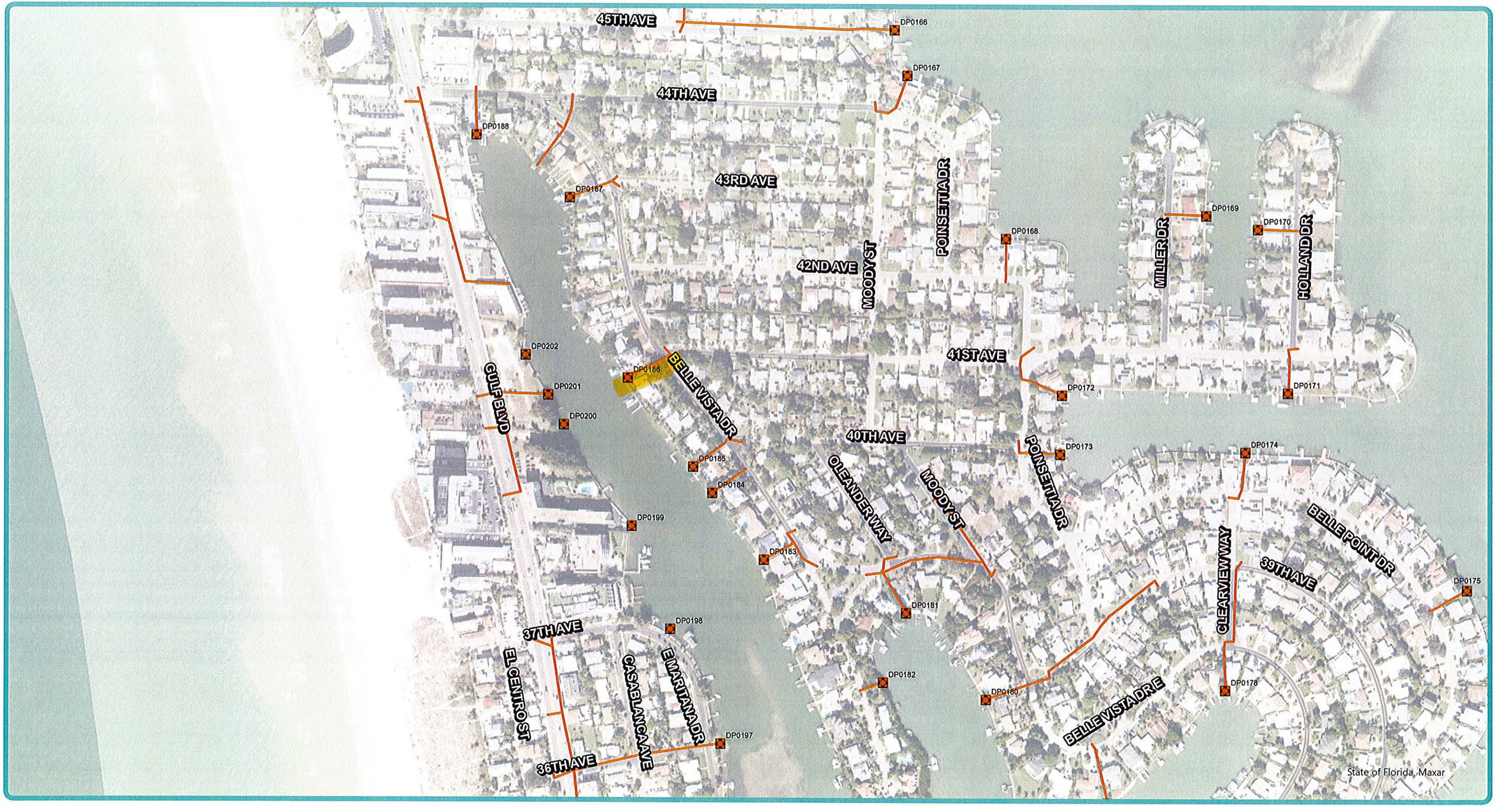

ST. PETE BEACH STORM SYSTEM

Service Area 16 - Page 9

APRIL 2023

- Clean Out
- Control Valve
- Discharge Point
- Fitting
- Inlet
- Manhole
- Pump Station
- Gravity Main
- Abandoned Pipe

St. Pete Beach
The Sunset Capital of Florida

N

0 80 160 320 480 640
Feet



ST. PETE BEACH STORM SYSTEM

Service Area 9 - Page 10

APRIL 2023

- Clean Out
- Control Valve
- Discharge Point
- Fitting
- Inlet
- Manhole
- Pump Station
- Gravity Main
- Abandoned Pipe

St. Pete Beach
The Sunset Capital of Florida

N

0 55 110 220 330 440
Feet



ST. PETE BEACH STORM SYSTEM

Service Area 2 - Page 11

APRIL 2023

- Clean Out
- Control Valve
- Discharge Point
- Fitting
- Inlet
- Manhole
- Pump Station
- Gravity Main
- Abandoned Pipe

St. Pete Beach
The Sunset Capital of Florida

N

0 80 160 320 480 640
Feet

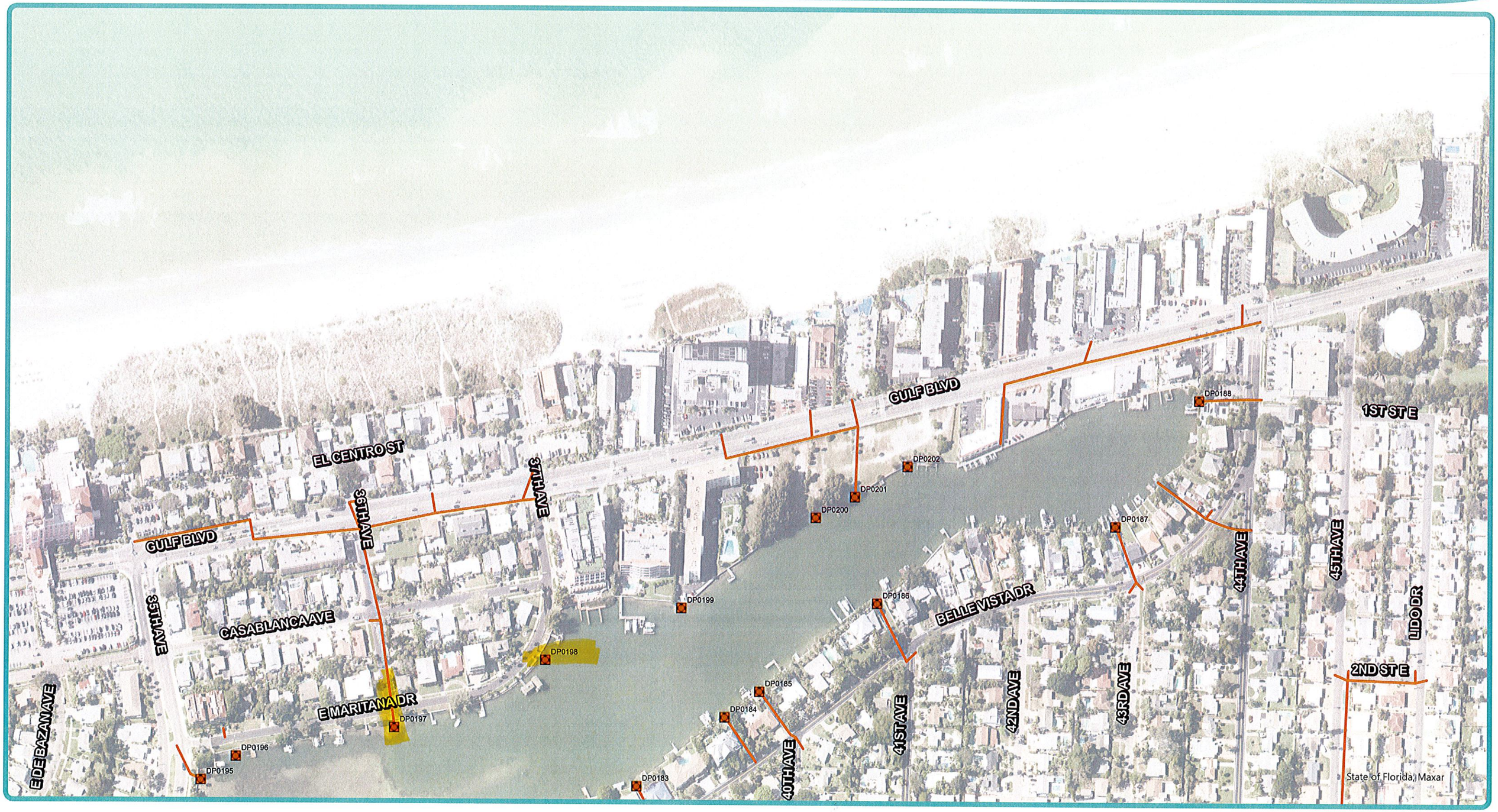

ST. PETE BEACH STORM SYSTEM

Service Area 14 - Page 17

APRIL 2023

Clean Out
Control Valve
Discharge Point
Fitting
Inlet
Manhole
Pump Station
Gravity Main
Abandoned Pipe

St. Pete Beach
The Sunset Capital of Florida

N

0 137.5275 550 825 1,100 Feet





City of St Pete Beach
Request for Bid

Commercial Diving Services

Bids due on or before
04/08/2026 at 9:00 AM
EST(Deadline) Electronically Via Bonfire Only

Table of Contents

I. CONTRACTOR'S BID SUBMITTAL 3
II. BID FORM 4
III. GENERAL CONTRACT TERMS 5
IV. REFERENCES & MINIMUM QUALIFICATIONS 25
V. PUBLIC ENTITY CRIMINAL AFFIDAVIT 26
VI. NON-COLLUSION AFFADAVIT 28
VII. SPECIFICATIONS 29

Event	Date	Time
Publication of Bid	03/11/2026	8:00 AM
Pre-Bid Meeting	03/18/2026	9:30 AM
Deadline for Question Submission	03/25/2026	10:00 AM
Bid Receiving Deadline	04/08/2026	9:00 AM
Bid Opening	04/08/2026	9:30 AM

I. CONTRACTOR'S BID SUBMITTAL

The company that is submitting a bid declares that it has extensive experience in **Commercial Diving Services.**

The undersigned, as Bidder, hereby declares that the only person or persons interested in the Bid as principal or principals are named herein, and that no person other than herein mentioned has any interest in the Bid or in the Agreement to be entered into; that this Bid or Agreement is made without connection with any other person, company, or parties making a Bid; and that it is in all respects fair and in good faith without collusion or fraud.

The Bidder further declares that they have examined the site of the work and informed themselves fully in regard to all conditions pertaining to the place where the work is to be done; that they have examined the Plans and Specifications for the work and Contract Documents relative thereto, and have read all special provisions furnished prior to the opening of bids; and that they have satisfied themselves relative to the materials to be supplied and work to be performed.

The Bidder proposes and agrees, if the Bid is accepted, to contract with the City of St. Pete Beach, Florida, in the form of an Agreement specified for **"Commercial Diving Services"** in St. Pete Beach, Florida, in full and complete accordance with the shown, noted, described, and reasonably intended requirements of the Plans, Specifications, and Contract Documents, to the full and entire satisfaction of the City of St. Pete Beach, Florida.

The successful bidder shall be required to utilize the template Agreement in this Request for Bids (RFB) and any questions regarding the Agreement must be addressed during the RFB process before submittal. The City reserves the right to respond or not respond to questions in the form of an addendum.

The Bidder proposes to furnish all materials, equipment, labor, and perform the work submitted in their bid schedule for the City of St. Pete Beach **" Commercial Diving Services".**

COMPANY: _____ DATE: _____

ADDRESS: _____ PHONE: _____

BIDDER: _____ NAME: _____
(SIGNATURE) *(PRINT NAME & TITLE)*

STATE OF FLORIDA
COUNTY OF _____

The foregoing instrument was sworn to (or affirmed), subscribed, and acknowledged before me **by means of ☐ physical presence or ☐ online notarization**, this _____ day of _____, 2026, by _____, who is personally known to me or has produced _____ as identification.

(SEAL)

_____
Notary Public – State of Florida

_____
(Print, Type, Stamp, or Commissioned Name of Notary Public)

SUBMIT BID TO:

Electronically via Bonfire Only

II. Bid Form

Pay Item	Description	Quantity	Unit	Unit Cost	Total Cost
Diver Team Labor					
	Three (3) Man Dive Team, Scheduled	40	Hour		$ -
	Three (3) Man Dive Team, Overtime	20	Hour		$ -
	Three (3) Man Dive Team, Unscheduled	40	Hour		$ -
	Additional Diver	8	Hour		$ -
	Additional Diver, Overtime	8	Hour		$ -
	Additional Diver, Unscheduled	8	Hour		$ -
	Written & Photo/Video Reports or Specialized Paperwork	10	Hour		$ -
	Emergency Call-Out Fee	1	Each		$ -
				Subtotal	**$ -**
Mobilization Rate, Per Occurrence					
	Mobilization Fee	5	Each		$ -
	Demobilization Fee	5	Each		$ -
				Subtotal	**$ -**
Equipment					
	Work Boat / Barge	20	Day		$ -
	Hydraulic Unit	20	Day		$ -
	4-inch Hydraulic Submersible Pump	20	Day		$ -
	Jet Pump	20	Day		$ -
	4,000 PSI Water Blaster	20	Day		$ -
	Digital Underwater Camera	20	Day		$ -
	Underwater Video with Digital Capture	20	Day		$ -
	Fuel Charge	20	Day		$ -
	Small Pneumatic Tool	20	Day		$ -
	Shallow Water Dive Package	20	Day		$ -
	Additional Equipment (Cost plus 15%)	1	LS		
				Subtotal	**$ -**
Materials					
	Additional Materials (Cost plus 15%)	1	LS		
				TOTAL	$ -

** Scheduled labor is six (6) hour minimum onsite. Overtime is after eight (8) hours including nights, weekends, and holidays.*

III. GENERAL CONTRACT TERMS

REQUEST FOR BID

The City of St. Pete Beach is submitting this RFB for bids on the Commercial Diving Services.

LOCATIONS

The City of St. Pete Beach is soliciting bids from qualified Commercial Diving Services for the City.

BID SUBMITTALS

Bid documents must include a signed/notarized Contractor's Bid Submittal, Bid Form, References, Contractor's license and insurance certificates, and Public Entity Criminal Affidavit. The Contractor shall submit one electronic bid via Bonfire.

BIDDER INFORMATION

The City is not responsible for any Addendums or other supplementary information that is not received due to non-submittal of the aforementioned information. Please refer back to the city website (http:// www.stpetebeach.org/news-and-links/city-projects.html) for additional project information as it becomes available. The City reserves the right to decide whether to answer addendums or not. The City is not required to provide any additional information.

PRE-BID MEETING

An optional pre-bid meeting will be held on **03/18/2026 at 9:30 AM EST** via Microsoft Teams Video conference/Teleconference. Please contact the City's Procurement Manager (purchasing@stpetebeach.org) for a meeting invitation and Microsoft Teams Meeting instructions.

WRITTEN REQUESTS FOR INTERPRETATIONS/CLARIFICATIONS

No oral interpretations will be made to any firms as to the meaning of the scope of work or any other contract documents included in this **RFB.** All questions pertaining to the terms and conditions or scope of work of this Request for Bid **(RFB)** must be sent in writing only via email to the City Procurement Manager (purchasing@stpetebeach.org) and shall be received no later than **10:00 EST on 03/25/2026**. Responses to questions may be handled as an Addendum if the response would provide clarification to the requirements of the **RFB**. All such Addenda shall become a part of the contract documents. The City will not be responsible for any other explanation or interpretation of the proposed **RFB** made or given prior to the award of the contract. The City will not respond to questions received after the specified deadline. The City reserves the right to respond to any and all questions but is not required to do so.

BID PACKAGES

Sealed bids will be accepted by the City until **04/08/2026** at **9:00 AM** EST (Deadline). No bids shall be accepted by the City after this deadline – NO EXCEPTIONS. Bid Packages must be electronically submitted via Bonfire Clearly marked as: "**Commercial Dive Services**." If a link is needed for either site, please contact the Procurement Manager (purchasing@stpetebeach.org.) All Bidders are invited to attend this bid opening.

CONTACT INFORMATION

Sara Spain – Procurement Manager
Mailing Address - 155 Corey Avenue, St. Pete Beach, Florida 33706
E-mail - purchasing@stpetebeach.org

SCOPE OF WORK

The City of St. Pete Beach is seeking a qualified full service commercial diving Contractor with experience in a wide range of applications. The Contractor shall provide a qualified dive team, and all related diving equipment required to assist the City of St. Pete Beach with the cleaning, inspection, repair and maintenance of tide check valves, stormwater outfalls, manatee grates, subaqueous pipelines, piers, piles, and bulkheads.

The City of St. Pete Beach has 35 tide check valves, and 25 manatee grates installed at stormwater outfalls throughout the City. Services shall include:

- Debris Removal from Valve, Pipe, Endwalls, and Pit
- Marine Growth Removal from Valve, Pipe, Endwalls, and Pit
- Maintenance of Manatee Grates, when present
- Written and Video Reports of condition per cycle
- Repair and Replacement of in-line and outfall-end type Tidal Check Valves
- Hydraulic Dredging

Services must comply with relevant standards and regulations, including OSHA diving regulations and any applicable environmental guidelines.

CONTRACTOR TO FURNISH

- A Qualified Dive Team
- All Related Diving Equipment
- Underwater Video with Digital Capture
- Shallow Water Dive Package
- Small Pneumatic Tool
- Work Boat / Barge
- Hydraulic Unit
- 4-inch Hydraulic Submersible Pump
- Jet Pump
- 4000 PSI Water Blaster
- Digital Camera

THE CITY OF ST. PETE BEACH TO FURNISH

- A Representative to Coordinate Activities
- A Representative to View Video Real Time and Direct the Crew
- Access to Work Site
- Permits (If required)
- Assist with Lock-Out Tag-Out procedures (training or supervision as needed)
- Procurement of Tidal Check Valves (as needed)

SCHEDULE

Maintenance, cleaning and inspection shall be scheduled per occurrence and may include the full asset inventory or a portion of that inventory for each cycle. Maintenance cycles are to be performed quarterly, or more frequently as-needed, based on City requirements.

Tidal check valve, manatee grate, and other miscellaneous outfall repairs shall be scheduled per occurrence, as-needed.

The Contractor must provide at least 72 hours' notice for scheduling changes. Emergency response for unscheduled maintenance requests must be available within 24 hours.

PERFORMANCE METRICS

The following performance metrics will be used to evaluate the Contractor's work:

- Timeliness of completing tasks as per the agreed schedule.
- Accuracy and thoroughness of written condition reports.
- Compliance with safety standards and regulations.
- Responsiveness to unscheduled maintenance requests.

All reports must be submitted in a digital format (PDF or Word) within ten (10) days of completing each maintenance cycle. Reports should include:

- Detailed descriptions of completed tasks.
- Photographic and video evidence.
- Identified issues and recommendations for future maintenance.

PENALTIES

Failure to adhere to the schedule or meet performance standards may result in penalties, including:

- 5% reduction in payment for delayed work (per day).
- Rework at Contractor's expense for substandard services.

EMERGENCY SERVICES

The Contractor must provide emergency maintenance services within 24 hours of the City's request. The bid form includes an emergency call-out fee to account for this service.

Once a contract is awarded, the selected vendor will be required to submit a detailed fee schedule outlining the main pay items for the project. This fee schedule will be reviewed at the pre-construction meeting and will be used to review pay applications and evaluate project progress.

DETAILED SPECIFICATIONS

LOCATIONS

The locations will cover all tide check valves, stormwater outfalls, manatee grates, subaqueous pipelines, piers, piles, and bulkheads Citywide that are City owned throughout the City of St. Pete Beach Florida.

Standard work hours shall be from 7:30 AM until 6:00 PM, Monday through Saturday. No work shall take place on Sundays or on official City holidays without prior approval by the City Manager or designee at least 1 week prior to the scheduled work. A list of current official City holidays can be found on the City's Human Resources website at http://www.stpetebeach.org/hr/holidays.html. Contractor will coordinate scheduling of work with the City's Project Manager and City's Inspector.

ADDITIONAL WORK DETAILS

Contractors or persons wishing to bid on this project are licensed, bondable and insured in accordance to the City's requirements. The Contractor will furnish all necessary labor, materials, tools, equipment and supplies to complete the scope of work. Bid must also include all costs for licenses, permits, and any material disposal fees.

Bidders shall bring questions, discrepancies, omissions, conflicts or doubt as to meaning of any part of Contract Documents to the attention of the City of St Pete Beach Procurement Manager at least ten (10) business days before bid submittal deadline. Clarification of intent of Contract Documents, if necessary, shall be made available to bidders in the form of an Addendum. Failure to request clarification of interpretation of Contract Documents shall not relieve bidders of their responsibilities to perform the work.

The City of St. Pete Beach reserves the right to reject any or all bids or parts of bids, or accept any bid or part thereof deemed to be in the best interests to the City of St. Pete Beach.

STATEMENT OF WORK

The Contractor shall furnish and pay the cost, including sales tax and all other applicable taxes, licenses, permits and fees, of all the necessary materials not furnished by the City and shall furnish and pay for all the superintendence, labor, tools, equipment, transportation, and perform all the work required for the execution of all services listed in the Bidder's Proposal and Bid Form attached hereto and in strict accordance with the Plans, Specifications, and requirements of the City of St. Pete Beach which are attached hereto and made a part hereof, and any amendments thereto and such supplemental Plans and Specifications which may hereafter be approved.

BEGINNING DATE

The Contractor shall, within ten (10) business days after receipt of the Notice of Award and before commencement of any operations hereunder, execute the Agreement. Additionally, the Contractor shall, within twenty (20) business days after receipt of the Notice of Award, provide all required documentation to the City. The Contractor must commence construction activities within thirty (30) business days of NTP to prepare and procure materials. Any change to the start date or the work schedule included with this bid must be submitted in writing to and approved by the City Manager or designee.

COMPLETION OF WORK

The work will be completed on an as-needed basis. Each location that needs to be surveyed, repaired and/or worked on will constitute it's own "job". The contract will be for (3) three years from time of execution (Date of last signature) of the contract with (2) additional (1) one year extensions if agreed upon by the City and vendor. .

EXAMINATION OF SITE

Bidders may visit specific areas with advanced notice.

ASSURANCES

The responding Contractor shall provide a statement of assurance that the Contractor is not presently in violation of any statutes or regulatory rules that might have an impact on the firm's operations. All applicable laws and regulations of the State of Florida, and ordinances and regulations of the City of St. Pete Beach will apply.

TRAFFIC CONTROL AND STAGING AREA

Contractor shall include all costs associated with vehicular and pedestrian traffic control and maintenance during the project. Contractor shall be responsible for providing a staging area. The location of this area must be approved by the City Manager or designee. The Contractor will be required to control the area including any additional fencing or barricades and Contractor will be responsible for the restoration of this and all other staging areas provided by the City.

ASSIGNMENT AND TRANSFER OF CONTRACT

The Contractor shall not assign or transfer this Agreement or any part thereof or any interest therein without consent in writing of the City and the Contractor's Surety, and any such assignment or transfer without such written consent shall be null and void.

SUBCONTRACTS

The Contractor shall not subcontract this Agreement or any part thereof or any interest therein without consent in writing of the City and the Contractor's Surety. Any Subcontractor approved by the City will be subject to the same standards and qualifications as stated in this Contract.

PERFORMANCE PAYMENT BOND

Not required for this contract.

LIQUIDATED DAMAGES

If the work embraced by this Contract is not completed on or before the date set for completion or any extension thereof, the actual damages for the delay will be impossible to determine and in lieu thereof, the Contractor shall pay to the City fixed, agreed, and liquidated damages in the amount of either Five-Hundred Dollars ($500) per day for each calendar day of delay until the work is satisfactorily completed.

PAYMENT

Payment shall be made to the Contractor for work performed under this Contract for the quantities of work as determined in accordance with Payments for Work Completed and Payments Withheld of this Contract. Payment for extra work will be made in accordance with the Changes in Work, Contract Amount, and Contract Time sections below.

CHANGES IN THE WORK

Without invalidating the Contract, the City may, at any time or from time to time, order additions, deletions or revisions in the work authorized by written Change Orders or directives. Upon receipt of a Change Order, the Contractor will proceed with the work involved. All such work shall be executed under the applicable conditions of the Contract documents. If any Change Order causes an increase or decrease in the Contract Amount or any extension or shortening of the Contract Time, an equitable adjustment will be made.

Additional Work performed by the Contractor without authorization of a Change Order will not entitle them to an increase in the Contract Amount or any extension of the Contract Time, except in the case of an emergency (subject to approval by City Manager or designee).

It is the Contractor's responsibility to notify their Surety of any changes affecting the general scope of the Work or change of the Contract Amount and the amount of the applicable bonds shall be adjusted accordingly, and an amended bond document furnished to the City. In the event the City directs the Contractor to make a change in the Work, and if the City and the Contractor do not arrive at a mutually acceptable increase or decrease in the Contract Amount, the contractor shall not use any such lack of mutual acceptance as a basis or cause to stop or otherwise delay the progress or the execution and completion of any of the work ordered, directed or required pursuant to the Contract Documents.

If the Contractor believes an event or situation has occurred which justifies a change in the Contract Amount or Contract Time, he shall deliver a written notice to the City Manager or designee. Each such written notice shall be delivered promptly and no later than fifteen (15) business days after the Contractor first discovered the occurrence. The Contractor shall be deemed to have waived the right to collect any and all costs incurred more than fifteen (15) business days prior to the date of delivery of the written notice and shall be deemed to have waived the right to seek an extension of the Contract Time with respect to any delay in the Progress Schedule which accrued more than fifteen (15) business days prior to the date of delivery of the written notice.

Any such notice shall include sufficient detail to explain the basis of entitlement to a claim for an adjustment to the Contract Amount of Contract Time. When requested by the City Manager or designee, the Contractor shall furnish any additional information and details as may be required to determine the facts or allegations involved, which shall be provided within fifteen (15) business days of the request unless a longer time period is allowed by the City Manager or designee.

The Contractor shall prepare bids detailing proposed adjustments to Contract Amount and/or Contract Time and submit them to the City Manager or designee within fifteen (15) business days of the City's issuance of a proposed Change Order or the Contractor's submitting a written notice of a change or claim for an adjustment to the Contract Amount or Contract Time. Contractor's bids shall be irrevocable for a period of at least sixty (60) business days after receipt by the City. Any delay in the submittal of a complete, adequate and acceptable bid will not justify an increase in Contract Amount or Contract Time. Contractor agrees that it shall give the City access to any and all of Contractor's and Subcontractors' books, records and other materials relating to proposed Change Orders and other claims for adjustment to Contract Amount or Contract Time.

CHANGE OF CONTRACT AMOUNT

The Contract Amount constitutes the total compensation payable to the Contractor for performing the Work. All duties, responsibilities and obligations assigned to or undertaken by the Contractor shall be at his expense without change in the Contract Amount. The Contract Amount may only be changed by written Change Order issued by the City. Any claim for an increase in the Contract Amount shall be in writing and delivered to the City Manager or designee within fifteen (15) business days of the occurrence of the event giving rise to the claim.

All claims for adjustment in the Contract Amount shall be determined by the City Manager or designee. However, no claim for an adjustment to the Contract Amount will be considered for unforeseeable causes that were beyond the fault or negligence of the Contractor or his Subcontractors or supplier such as acts of God, floods, riots, etc. This restriction does not restrict submission of claims for additional Contract Time due to events of this nature. Any change in the Contract Amount shall be incorporated in a Change Order.

Contractor bids or claims shall cover all aspects of the Work involved and shall be fully documented and itemized as to all costs, quantities and charges for overhead and profit. Amounts for Subcontractors or Suppliers at any tier shall be similarly supported. When determining Subcontractors' costs, the methods to

be used shall be those used for the Contractor's costs, except that the term "Subcontractor" shall replace the term "Contractor," context permitting.

Changes in Contract Amount for extensions in Contract Time shall exclude costs that are unaffected or do not relate to the extension in Contract Time, such as: (a) operating costs of construction equipment assigned to the Work on a continuing basis, (b) operating costs and owned/rental costs of construction equipment (crane used for specific lifts, concrete pump used for specific pours, etc.), and (c) fully paid site facilities, tools, etc.

The value of any Work covered by a Change Order or of any claim for an increase or decrease in the Contract Amount where the Work involved is covered by unit prices contained in the Contract Documents shall be determined by application of unit prices to the quantities of the items involved. If the quantities originally contemplated are so changed in a proposed Change Order, that application of the Unit Prices to the quantities proposed will cause substantial inequity to the City or the Contractor, the applicable unit price(s) shall be equitably adjusted by mutual agreement.

If the value of work covered by a Change Order cannot be established or mutually agreed to utilizing previously established unit rates, the value shall be determined by the City on the basis of an estimate of the out-of-pocket cost and percentages that are acceptable to the City for overhead and profit. The out-of-pocket cost shall only include those direct costs which are needed to perform the work such as labor (including payroll taxes, fringe benefits, labor burden and workers' insurance), materials, equipment, and other incidental out-of-pocket construction costs directly involved in the work, including but not limited to small tools, expendables and material costs but shall not include project management or project supervisory costs unless the Change Order includes an increase in the Contract time.

In such case, the Contractor will submit in the form prescribed by the City an itemized cost breakdown together with supporting data.

The amount of credit to be allowed by the Contractor to the City for any such change which results in a net decrease in cost, will be the amount of the actual net decrease as determined by the City. When both additions and credits are involved in any one change, the combined overhead and profit shall be figured on the basis of the net increase, if any.

To be eligible for consideration, the Contractor's written claim for a change in the Contract price, including claim(s) from sub-contractors, shall include an itemized cost breakdown with supporting data as described below:

A. <u>For labor</u>: Provide written documentation from the Contractor and Subcontractors or others as appropriate in the form of a detailed breakdown by each labor classification involved indicating the number of hours of Work involved and the hourly payroll rate applicable to each to substantiate the basis and amount of the direct labor cost. The direct labor cost may be increased to provide an allowance for indirect payroll costs (labor burden), such as payroll taxes, fringe benefits, and workers insurance after all premium discounts, rebates and other appropriate reductions have been taken.

B. <u>For material, supplies, equipment, furnishings, etc., to be installed or included in the Work</u>: Provide written documentation from the Contractor and Subcontractors, suppliers, etc., to substantiate the basis and amount of the various cost items involved. Material costs shall reflect the Contractor's reasonably anticipated net actual cost after consideration of trade discounts and volume rebates.

C. For construction equipment: Provide written documentation in the form of a detailed breakdown by each construction equipment category, indicating the applicable unit rates (i.e., dollar amount per hour, dollar amount per day etc.,) and the number of hours, days, etc. to substantiate the basis and amount of the construction equipment out-of-pocket costs.

CHANGE OF CONTRACT TIME

The Contract Time may only be changed by written Change Order. Any claim for an extension in the Contract Time shall be in writing and include an analysis of the Progress Schedule as further described in the Specifications and shall be delivered to the City Manager or designee within fifteen (15) business days of the occurrence of the event giving rise to the claim. All claims for adjustment in the Contract Time shall be determined by the City Manager or designee. Any change in the Contract Time resulting from any such claim shall be incorporated in a Change Order. The Contract Time may be extended for an amount equal to time lost due to unforeseeable causes beyond the control of the Contractor (and his Subcontractors and Suppliers) if he makes a claim therefrom. Such delays shall include, but not be restricted to, acts or neglect by any separate Contractor employed by the City; fires; floods; labor disputes; epidemics; or acts of God.

All time limits stated in the Contract Documents are of the essence to the Contract. The stated time limits are agreed to be adequate to complete the work, including the procurement, manufacture and delivery of all material and equipment required, and account for any and all potential impact, delays, disruptions and costs that may be expected.

CITY'S RIGHT TO DIRECT PURCHASE

The City has reserved the right to purchase certain items and materials for this project directly in an effort to save applicable sales tax in compliance with Florida Law.

The City will issue purchase orders directly to the vendors supplying the equipment being directly purchased by the City for this project. Each Purchase Order will be accompanied by the City's Certificate of Exemption and a Certificate of Entitlement. All direct purchase vendor invoices will be issued to the City of St. Pete Beach, and the City will issue payment to each direct purchase vendor from City funds. The City will take title to the equipment at time of delivery from the vendor and will issue a separate Certificate of Entitlement for each purchase order.

The Contractor shall assist the City with receipt of materials furnished by the City in accordance with these Special Provisions including, but not limited to, verifying correct quantities, verifying documents of orders in a timely manner, providing and obtaining all warranties and guarantees required by the Contract Documents, assist with inspection of the goods at the time of delivery and notify the City immediately of any deficiencies noted. It is understood that the owner assumes the risk of damage or loss during the time that the building materials are physically stored at the job site prior to their installation or incorporation into the project. The Contractor shall coordinate with the City regarding the delivery schedules, sequence of delivery, loading orientation, and other arrangements normally required by the Contractor for the particular material furnished.

As City Furnished Materials are delivered to the job site and accepted by the City, the City shall notify the Contractor who will assist the City to visually inspect all shipments from the suppliers. The City will approve the vendor's invoice for material delivered upon adequate inspection and recommendation of the Contractor. The City shall assure that each delivery of City Furnished Materials is accompanied by documentation adequate to identify the Purchase Order against which the purchase is made and Contract Documents including but not limited to Contract, Plans, Specifications, and approved Shop Drawings. This documentation may consist of a delivery ticket, bill of lading and an invoice from the supplier conforming

to the Purchase Order together with such additional information as the City may deem necessary.

PAYMENTS FOR WORK COMPLETED

Partial payments will be made as the work progresses (if applicable) at the end of each calendar month, or as soon thereafter as practicable on estimates made by the City Manager or designee and as approved by the City, provided that the Contractor is performing the overall job in a diligent manner. In making partial payments, there shall be retained five percent (5%) on the amount of each estimate until final completion and acceptance of all work covered by the Contract. Upon completion and acceptance of the work, the City Manager or designee shall issue a certificate that the work has been completed and accepted by them under the conditions of the Contract and shall make and approve the final estimate of the work. The entire balance found to be due the Contractor, including that retained by the City, should be paid to the Contractor. Such payment shall be conditioned, however, upon the submission by the Contractor of evidence satisfactory to the City that all claims for labor, material, and any other outstanding indebtedness in connection with the Contract have been paid. Such payment shall also be conditioned upon approval and acceptance of the construction and improvements by the City.

If after the work has been substantially completed, full completion thereof is materially delayed through no fault of the Contractor and the City Manager or designee so certifies, the City shall upon the Certificate of the City Manager or designee, and without terminating the Contract make payment for the balance due for that portion of the work fully completed and accepted. Such payment shall be made under the terms and conditions governing final payment, except that it shall not constitute a waiver of claim. If such delay occurs and payment is made under this clause, the Contractor shall nevertheless be prepared to complete the work in a timely manner upon the remedy or removal of such delay, and shall be bound under this Contract for the completion of such work unless this Contract is otherwise terminated. All payments will be made in accordance with the Local Government Prompt Payment Act, Chapter 218, Florida Statutes.

PAYMENTS WITHHELD

The City Manager or designee may withhold, or, on account of subsequently discovered evidence, nullify the whole or part of any estimate to such extent as may be necessary to protect the City from loss on account of:

a) Defective work not remedied

b) Claims and/or liens filed or reasonable evidence indicating probable filing of claims

c) Failure of the Contractor to make payments properly to Subcontractors or for material or labor

d) A reasonable doubt that the Contract can be completed for the balance then unpaid

e) Damage to another Contractor

f) Failure of the Contractor to keep their work progressing in accordance with their time schedule

FINAL PAYMENTS

Upon the completion and acceptance of the work, the City Manager or designee shall issue a certificate that designates that the whole work provided for in this Contract has been completed and accepted by him under the conditions and the terms thereof and shall make the final estimate of the work. After issuance of the certificate, the entire balance found to be due the Contractor, including said retained percentage by the City in accordance with existing state laws as may be retained lawfully by said City, shall pay excepting such

sums to the Contractor.

Before the approval of the final payment, the Contractor shall submit evidence satisfactory to the City that states that all payrolls, materials, bills and outstanding indebtedness in connection with this Contract have been paid.

LIENS

If at any time there shall be evidence of any lien or claim for which the City might become liable and which is chargeable to the Contractor, the City shall have the right to retain out of any payment then due or thereafter to become due, an amount sufficient for complete indemnification against such lien or claim. In the event the City has already paid to the Contractor all sums due under this contract or the balance remaining unpaid is insufficient to protect the City, the Contractor and his Surety shall be liable to the City for any loss so sustained.

RESPONSIBILITY OF THE CITY MANAGER OR DESIGNEE

The term "City Manager or designee" wherever used in the Contract shall be the City of St. Pete Beach or its duly authorized representative. Notices of any change in the City Manager or designee shall be given in writing by the City to the Contractor. The City Manager or designee shall have full authority to interpret the Plans and Specifications and shall determine the amount, quality, and acceptance of the work and supplies to be paid for under the Contract and every question relative to the fulfillment of the terms and provisions therein. It shall be the duty of the City Manager or designee to enforce the Plans and Specifications in a fair and unbiased manner. If a variation from any requirements is allowed the City Manager or designee shall grant the same in writing with the reasons for his action outlined, and such action will not invalidate or change the Contract in any other manner.

INTENT OF PLANS AND SPECIFICATIONS

The Contractor shall keep on the job a copy of the Plans and Specifications and shall at any time give the City Manager or designee access thereto. Anything mentioned in the Specifications and not shown on the Plans or shown on the Plans and not mentioned in the Specifications, shall be of like effect as if shown or mentioned in both. The Contractor shall not take advantage of any errors, discrepancies or omissions that may exist in the Plans and Specifications but shall immediately call them to the attention of the City Manager or designee whose interpretation or correction thereof shall be conclusive. Should a conflict occur between the General Specifications and any Supplemental Specifications and/or Plans, the latter shall govern.

LICENSES AND PERMITS

The Contractor shall obtain and pay for all necessary City licenses and work permits and shall faithfully comply with all laws, ordinances and regulations, (Federal, State or local) which may be applicable to the operations to be conducted hereunder, except for those permits obtained by the City. Notwithstanding the provisions above, the contractor is responsible for non-compliance of all permit requirements, including all fines resulting from Contractor's non-compliance of said requirements.

Chapter II, Section II-4, "Registration of Licenses Obtained From Other Municipalities:" "Persons, partnerships, corporations, or other business entities doing business with the City who are not required to obtain a City occupational license, but who must have either a State or County or Municipal occupational license from another municipality, shall register such occupational license with St. Pete Beach Community Development Department. The City may charge a fee for such registration." The Contractor shall be

responsible for obtaining all City, County, State and Federal permits required by those government agencies and must provide documentation of receipt of those permits prior to project commencement. This shall include a notice to commence work letter and the applicable fee, if required. Any sub-contractor hired by the contractor awarded the project, MUST also register their license with the City.

SUPERINTENDENCE

The Contractor shall constantly superintend all the work embraced in this Contract in person or by a responsible agent who shall have in writing, full authority to act for them and to carry out all the instructions given by the City Manager or designee.

LABOR PROVISIONS

The Contractor and his Subcontractors shall discharge, whenever ordered to do so by the City Manager or designee, any employee who is disorderly or whose conduct in the opinion of the City Manager or designee is detrimental to the prosecution of the work. No person whose age or physical condition is such as to make this employment dangerous to his/her health and safety or to the health and safety of others shall be employed on the work, and in no event shall any persons under the age of sixteen (16) years be employed.

INSURANCE

The Contractor shall procure and maintain at his/her own expense, during the life of the Contract, liability insurance as hereinafter specified. All such insurance shall be subject to the approval of the City for adequacy of protection and shall include a provision preventing cancellation without twenty (20) business days prior notice to the City in writing. The City shall be included as an additional insured on all liability insurance. The liability insurance required is as follows: Contractor's General Public Liability and Property Damage Insurance issued to the Contractor and protecting the Contractor from all claims for personal injury, including death, and all claims for destruction of or damage to property, arising out of or in connection with any operations under this Contract, whether such operations be by the Contractor or by any Subcontractor hired by the Contractor or anyone directly or indirectly employed by the Contractor or hired by the Contractor.

The successful Contractor shall supply and maintain insurance which defends, indemnifies and holds harmless the City of St. Pete Beach, its officers, employees and agents from and against any and all liability, damage claims, demands, costs, judgments, fees, attorney's fees or loss arising directly out of acts or omissions hereunder by the Contractor or third party under the direction or control of the Contractor. Such general and excess liability coverage shall be primary to any other coverage carried by the City of St Pete Beach. Contractor must furnish the City with Certificate of Insurance prior to commencement of work. An approved Certificate of Insurance furnished by the Contractor's carrier to guarantee the Contractor being insured with the City of St Pete Beach must be named as a certificate holder for this contract. The following minimum coverage:

- Commercial General Liability Insurance $1,000,000.00.
- Comprehensive General Liability Insurance of $1,000,000.00 each occurrence.
- Personal Injury for $1,000,000.00 each occurrence.
- Automobile Liability $1,000,000.00.
- General Workers Compensation Insurance as required by Florida law.
- Longshore Harbor Workers Compensation Insurance

PROTECTION OF WORK AND PROPERTY

The Contractor shall continuously maintain adequate protection of all their work and materials from damage or theft and shall protect the City's property and all adjacent property from injury or loss arising in connection with activities under their Contract. The Contractor shall make good any such damage, injury, or loss, except such as may be caused by agents or employees of the City.

The Contractor shall take, use, provide, and maintain all necessary precautions, safeguards, and protection to prevent accidents, or injury to persons or property on, about, or adjacent to the site of the work. Should the situation arise that physical security is needed the Contractor will provide security on off days and holidays. The Contractor shall be responsible for all charges incurred with such action.

The Contractor shall post danger signs warning against any hazards created by the work being done under their Contract. They shall designate a responsible member of their organization on the work, whose duty shall be the prevention of accidents, and the name of the person so designated shall be reported to the City Manager or designee and City in writing. In an emergency affecting the safety of life, or of the work or adjoining property, the Contractor, without special instruction or authorization from the City Manager or designee, or City, is hereby permitted to act, at their own discretion, to prevent such threatened loss or injury, and they must take such action if so instructed or authorized by the City Manager or designee. The Contractor shall also protect adjacent property as required by law.

PARKING

The Contractor shall arrange with City Manager or designee for temporary parking areas to accommodate construction personnel and construction equipment. Note that limited parking spaces are available in the City of St. Pete Beach. The Contractor will be asked to coordinate with the City's representative on site on a regular basis to minimize the impact on residents and visitors.

TRANSPORTATION, HANDLING AND STORAGE

The Contractor shall transport, handle, protect and store products in accordance with manufacturer's instructions and all environmental regulatory agencies.

VEHICLES

Business vehicles shall be identified on both sides with the name of the company.

ENVIRONMENTAL PROTECTION

It shall be the Contractor's responsibility to implement construction methods, best management practices, and erosion control methods that avoid water pollution as required by the State of Florida Department of Environmental Protection (FDEP), City of St. Pete Beach, and Pinellas County. Any Contractors in violation of the City of St. Pete Beach Regulations, Pinellas County Regulations, Florida Department of Environmental Protection Regulations, or any other regulatory agency regulations shall be the sole responsibility of the Contractor. The Contractor shall hold harmless the City of St. Pete Beach and the City Manager or designee from any fines and litigation resulting from the Contractor's actions. The Contractor shall pay all attorneys' fees, fines, penalties and any other such expenses resulting from the Contractor's actions. The Contractor shall provide all necessary measures to prevent any materials whatsoever from entering the waterway except for those materials, which are shown, on the plans as completed structures. The Contractor shall provide MSDS sheets to the City Manager or designee on all applicable materials before applying those materials. The Contractor shall secure the necessary education, certifications,

licenses and permits required by state and local agencies to operate and manage a construction site, including but not limited to, FDEP requirements related to Coastal Construction Control Line. The Contractor shall abide by all rules and regulations set forth and required by the City of St. Pete Beach's MS4 NPDES Permit.

TIMELY DEMAND FOR STAKES AND INSTRUCTIONS

The Contractor shall provide reasonable and necessary materials, opportunities, and assistance for setting stakes and making measurements, including the furnishing of a rodman, or a chainman at intermittent times during the construction period. They shall not proceed until they have received such stakes and instructions as may be necessary as the work progresses. The work shall be done in strict conformity with such stakes and instructions. The Contractor shall carefully preserve benchmarks, reference points and stakes, and in case of willful or careless destruction, they will be charged with the resulting expense and shall be responsible for any mistakes that may be caused by their unnecessary loss or disturbance.

WORKMANSHIP

The Contractor acknowledges that they have satisfied themselves as to the nature and location of the work; the general and local conditions including but not restricted to those bearing upon transportation, disposal, handling and storage of materials; availability of labor, water, electric power, roads; and uncertainties of weather, surface conditions, subsurface conditions, tides or similar physical conditions at the site, the character of equipment and facilities required to prosecute the work. Any failure by the Contractor to acquaint themselves with any aspect of the work or with any of the applicable conditions shall not relieve the Contractor from the responsibility to successfully perform the work under the Contract Documents, nor shall it be considered the basis for any claim for additional time or compensation.

UTILITIES

The Contractor shall anticipate all underground obstructions such as water lines, gas lines, sewer lines, utility lines, or any other public or private facilities and debris. In all cases where existing utility lines may be interfered with by the work, the Contractor shall give a minimum of thirty-six (36) hours' notice to the owners of such utilities, to permit them to relocate the lines prior to construction. No extra payment shall be allowed for the removal, replacement, repair or possible increased cost caused by underground obstructions. The location of existing structures and utilities provided in the plans are approximate only. Any damage to existing structures to remain or work of any kind shall be repaired or restored promptly by, and at the expense of the Contractor.

The Contractor shall at all times protect all desirable trees, plants, curbs, sidewalks, irrigation components, and structures not requiring removal to accomplish the work, whether or not they are shown on the plans. The Contractor must contact the City to obtain tree removal permits for the removal of any tree not identified for removal in the Project Plans.

In matters of restoration, all materials, construction, and workmanship shall be acceptable to, and approved by the City of St. Pete Beach and the City Manager or designee. No changes in size, shape, configuration, location, materials, or construction shall be made without prior written authorization from the City Manager or designee. Any demolition debris and other debris shall be hauled offsite and properly disposed of by the Contractor and shall be inclusive to the prices as stated in the BID SCHEDULE, unless otherwise stipulated as part of the project to remain.

No interruption of ingress and egress to private property shall be made unless the Contractor has made prior arrangements acceptable to the owner of the affected property. The City Manager or designee shall

notify affected residents/property owners of impending activity or inconvenience via door hanger.

The Contractor shall provide all traffic control devices utilized during construction and meet the requirements set forth in the Florida State Department of Transportation "Manual on Traffic Control and Safe Practices for Street and Highway Construction, Maintenance, and Utility Operations."

CLEANING UP

Upon completion or termination of the work the Contractor shall, as directed by the City Manager or designee, remove from the vicinity of the work all equipment and temporary structures, waste materials and rubbish resulting from his operations, leaving the premises in a neat and presentable condition. All debris generated by the Contractor will be removed before leaving the area. All areas will be raked to remove smaller debris. All surrounding sidewalks, parking lots and roadways will be cleared of any dust or debris generated by the Contractor. In the event of their failure to do so, the City at the expense of the Contractor may do the same, and their Surety shall be responsible.

DEFECTIVE WORK OR MATERIAL

The Contractor shall promptly remove from the premises all work and materials condemned by the City Manager or designee as failing to conform to the Contract, whether incorporated or not, and the Contractor shall promptly replace and re-execute his own work in accordance with the Contract and without expense to the City and shall bear the expense of making good all work of other Contractors destroyed or damaged by such removal or replacement.

If the Contractor does not remove such condemned work or materials within a reasonable time after notice, the City may remove them and store the materials at the expense of the Contractor. If the Contractor does not pay the expense of such removal within ten (10) business days' time thereafter, the City may, upon thirty (30) business days written notice sell such materials at auction or at private sale and shall account for the net proceeds thereof after deducting all the costs and expenses that should have been borne by the Contractor.

DISPUTE RESOLUTION

The Contract shall be construed under Florida law. The parties agree that all controversies, claims and other matters in question between the parties arising out of or relating to this Contract or its breach shall be resolved through mediation. Upon notice of any party to the Contract of a dispute, question or controversy, the parties shall agree to the appointment of a qualified mediator. A qualified mediator is a person who has received at least forty (40) hours of mediation training and has actual experience as a mediator in resolving contract disputes. If the dispute, question or controversy is not resolved through mediation within sixty (60) business days of a notice of the dispute between the parties, the City reserves the right to seek resolution through court action.

INDEMNIFICATION

In consideration of the payment of ten dollars ($10.00) as part of the above purchase price, Contractor shall indemnify, defend, and hold harmless the City, its officers and employees, from liabilities, damages, losses and costs, including but not limited to, reasonable attorney's fees, to the extent caused by the negligence, recklessness, or intentional wrongful misconduct of the responding firm and any persons employed or utilized by the responding firm in the performance of the Contract.

GENERAL WARRANTY

Neither the final certificate nor any provision in the Contract Documents nor partial or entire occupancy of the premises by the City shall constitute an acceptance of work not done in accordance with the Contract Documents or relieve the Contractor of liability in respect to any express warranties or responsibility for faulty materials or workmanship. The Contractor shall remedy any defects in the work and pay for any damage to other work resulting therefrom that shall appear within a period of eighteen (18) months from the date of final acceptance of the work, unless a longer period is specified. The City shall give notice of observed defects with reasonable promptness.

LAND OF CITY, USE OF, BY CONTRACTOR

The City shall provide the land upon which the work under this Contract is to be done, and will, so far as is convenient, permit the Contractor to use as much of the land as is required for the erection of temporary construction facilities and storage of materials, together with the right of access to same, but beyond this, the Contractor shall provide, at his/her cost and expense, any additional land required. It will be the responsibility of the Contractor to repair or restore to the satisfaction of the City, at their own expense, any damage to land used for the above stated activities or any other activities approved by the City.

OTHER WORK

Wherever work being done by the City or by other Contractors is contiguous to work covered by this Contract, the respective rights of the various interests involved shall be established by the City Manager or designee to secure the completion of the various portions of the work in general harmony.

OTHER CONTRACTS

The City may award other Contracts. The Contractor shall fully cooperate with such other Contractors and carefully fit his/her own work to that provided under other Contracts, as may be with the performance of work by any other Contractor or City.

COOPERATIVE PURCHASING

Pursuant to their own governing laws and subject to the agreement of the Contractor, governmental entities may make purchases under the terms and conditions contained in the executed Contract, if agreed to by Contractor. Such purchases are independent of the Contract between the City and the Contractor, and the City is not a party to these transactions. Agencies seeking to make purchases under this Contract are required to follow the requirements of Rule 60A-1.045(5), F.A.C.

DELAYS AND EXTENSION OF TIME

If the Contractor should be delayed at any time in the progress of the work by an act or neglect of the City or the City Manager or designee, or of any employee of either, or by any separate Contractor employed by the City, or by changes ordered in the work, or by strike, lockouts, fire, unusual delay in transportation, unavoidable casualties, or any cases beyond the Contractor's control, or by delay authorized by the City Manager or designee, or by any cause which the City Manager or designee shall decide to justify the delay, then the time of completion shall be extended for such reasonable time as the City Manager or designee may decide. No such extension shall be made for a delay that occurs more than five (5) business days before a claim is made in writing to the City Manager or designee. In the case of a continued cause of delay, only

one (1) claim is necessary. This section does not exclude the recovery of damages for delay by either party under other provisions in the Contract Documents.

CITY'S RIGHT TO TAKE OVER THE WORK

If the Contractor shall be adjudged bankrupt, or if they should make a general assignment for the benefit of its creditors, or if a receiver should be appointed to take over their affairs, or if they should fail to prosecute their work with due diligence and carry the work forward in accordance with its' work schedule and the time limits set forth in the Contract Documents, or if they should fail to substantially perform one or more of the provisions of the Contact Documents to be performed by them, the City may serve written notice on the Contractor and the Surety on its' performance bond, stating the City's intention to exercise one of the remedies hereinafter set forth and the grounds upon which the City bases its right to exercise such remedy. In any event, unless the matter complained of is satisfactorily cleared within ten (10) business days after the service of such notice, the City may, without prejudice to any other right or remedy exercise one of such remedies at once; having first obtained a certificate from the City Manager or designee that such sufficient cause exists to justify such action.

The City may terminate the services of the Contractor, which termination shall take effect immediately upon service of notice thereof on the Contractor and their Surety, whereupon the Surety shall have the right to take over and perform the Contract. If the Surety does not commence performance of the Contract within ten (10) ten days after service of the notice of termination, the City may itself take over the work, take possession of and use all materials, tools, equipment, and appliances on the premises and prosecute the work to completion by such means as it shall deem best. In the event of such termination of their service, the Contractor shall not be entitled to any further payment under their Contract until the work is completed and accepted. If the City takes over the work and the unpaid Contract balance exceeds the cost of completing the work, including compensation for damages or expenses incurred by the City through the default of the Contractor, the excess unpaid Contract balance shall be paid to the Contractor. If the City takes over the work and the unpaid Contract balance does not exceed the cost of completing the work, including compensation for damages or expenses incurred by the City through the default of the Contractor, the Contractor and his Surety shall pay the difference to the City. The City Manager or designee shall certify such cost, expenses, and damages.

The City may take control of the work and either make good the deficiencies of the Contractor itself or direct the activities of the Contractor in doing so, employing such additional help as the City deems advisable. In such event, the City shall be entitled to collect from the Contractor and his Surety, or to deduct from any payment then or thereafter due the Contractor, the costs incurred by it through the default of the Contractor, provided the City Manager or designee approves the amount thus charged to the Contractor.

The City may require the Surety on the Contractor's bond to take control of the work at once and see to it that all deficiencies of the Contractor are made good with due diligence. As between the City and the Surety, the entire cost of making good such deficiencies shall be borne by the Surety. If the Surety takes over the work, either upon termination of the services of the Contractor or upon instructions from the City to do so, the provisions of the Contract Documents shall govern in respect to the work done by the Surety, the Surety being substituted for the Contractor as to such provisions, including provisions as to the payment for the work and provisions of this section as to the right of the City to do the work itself or to take control of the work.

RIGHT OF OCCUPANCY

The City shall have the right, if necessary, to take possession of and to use any completed or partially

completed portions of the work, if such use be approved by the City Manager or designee even if the time for completing the entire work or such portions of the work has not expired and even if the work has not been finally accepted. Such possession and use shall not constitute an acceptance of such possession and use if it materially interferes with the Contractor's operations. The City shall also have the right to enter the premises with the Contractor for the purpose of doing work not covered by its Contract.

ACCEPTANCE

Final inspection and acceptance of the work shall be made for the City by the City Manager or designee. Such inspection shall be made as soon as practical after the Contractor has notified the City in writing that the work is ready for such inspection.

WAIVER

It is expressly understood and agreed that any waiver granted by the City Manager or designee of any term, provision, or covenants of the Contract shall not constitute a precedent or breach of the same or any other terms, provisions, or covenants of the Contract. Neither the acceptance of the work by the City nor the payment of all or any part of the sum due the Contractor hereunder shall constitute a waiver by the City of any claim which the City may have against the Contractor or Surety under this Contract or otherwise.

INSPECTION

The City Manager or designee and his representative shall, at all times, have access to the work during its construction and shall be furnished with every reasonable facility for ascertaining that the stock and materials used and employed, and the workmanship, are in accordance with the requirements and intentions of the Plans. All work done and all materials furnished shall be subject to their inspection and approval by the City Manager or his designee. If any work should be covered up without approval or consent of City Manager or designee, it must, if required by the City Manager or designee, be uncovered for examination at the Contractor's expense.

The City Manager or designee may order re-examination of questioned work and if so ordered, the Contractor must uncover the work. If such work were found in accordance with the Contract Documents, the City shall pay the cost of re-examination and replacement. If such work be found not in accordance with the Contract Documents, the Contractor shall pay such costs unless they show that the defect in the work was caused by another Contractor, and in that event, the City shall pay such cost.

The inspection of the work shall not relieve the Contractor of any of their obligations to fulfill their Contract as prescribed, and defective work shall be made good and unsuitable materials shall be rejected, notwithstanding that such defective work and materials have been previously overlooked and accepted on estimates for payment. All work shall be tested to the satisfaction of the City Manager or designee before acceptance.

BID REVIEW AND CONTRACT AWARD

Failure to submit all documents requested at the time of bid may deem the Contractor's bid ineligible for award. The City of St. Pete Beach reserves the right to reject any or all bids or parts of bids or accept any bid or part thereof deemed to be in the best interests to the City of St. Pete Beach. The City shall be the sole final judge of qualifications of the bidder to perform service and reserves the exclusive right to accept or reject any bids as it deems to be in the best interests of the City. The City may waive any informality.

LOCAL, STATE AND FEDERAL COMPLAINCE REQUIREMENTS

The laws of the State of Florida do apply to any purchase made under this Request for Bid. Proposers shall comply with all local, state, and federal directives, orders and laws as applicable to their bid and subsequent contracts include but not limited to Equal Employment Opportunity, Minority Business Enterprise, and OSHA as applicable to this contract.

Compliance with Fla. Stat. 448.095:

- Contractor agrees to comply with all applicable portions of Fla. Stat. 448.095. Contractor must use the U.S. Department of Homeland Security's E-Verify System, hhtps://e-verify.uscis.gov/emp, to verify the employment eligibility of all employees hired on or after January 1, 2021 during the term of this Agreement.

- Subcontractors (i) Contractor shall also require all subcontractors performing work under this Agreement to use the E-Verify system for any employees they may hire during the term of this Agreement. (ii) Subcontractors shall provide Contractor with an affidavit stating the subcontractor does not employ, contract with, or subcontract with an unauthorized alien, as defined by Fla. Stat. 448.095 (iii) Contractor shall provide a copy of such affidavit to the City upon receipt and shall maintain a copy for the duration of the Agreement.

- Contractor must provide evidence of compliance with Fla. Stat. 448.05 by January 1, 2021. Evidence may consist of, but is not limited to, providing notice of Contractor's E-Verify number.

- Failure to comply with this provision is a material breach of the Agreement, and the City may choose to terminate the Agreement at its sole discretion. Contractor may be liable for all costs associated with the City securing the same services, inclusive, but not limited to, higher costs for the same services and rebidding costs (if necessary). Any challenge to termination under this provision must be filed in the Circuit Court no later than 20 calendar days after the date of termination. If this agreement is terminated for a violation of the statue by the Contractor, the Contractor may not be awarded a public agreement for a period of 1 year after date of termination.

RESERVES THE RIGHT

The City reserves the right to accept or reject any and/or all bids, to waive irregularities and technicalities, and to request re-submission. If only one bid is received by the bid date and time listed, the bid may or may not be rejected by the City depending upon bid review and the needs of the City.

The City reserves the right to select a firm with or without additional interviews and may decide to select any of the firms submitting bids. The City reserves the right to award the contract to a responsible proposer submitting a responsible bid, with a resulting negotiated agreement which is most advantageous and in the best interest of the City.

Proposers, bidders, their agents, and associates shall not contact or solicit any City Commission member, City employee, or official regarding this RFB during any phase of the bidding process. Failure to comply with the provision may result in disqualification of the bidder, at the option of the City. Only that individual listed, or an approved designee, as the contact person for this RFB shall be contacted.

SUBMITTAL WITHDRAWAL

After submittals are opened, corrections or modifications to submittals are not permitted, but a responding firm may be permitted to withdraw an erroneous submittal prior to the award by the City Commission, if the following is established:

- That the responding firm acted in good faith in submitting the submittal;
- That in preparing the submittal there was an error of such magnitude that enforcement of the submittal would work severe hardship upon the respondent;
- That the error was not the result of gross negligence or willful inattention on the part of the respondent;
- That the error was discovered and communicated to the City within twenty-four (24) hours of submittal opening, along with a request for permission to withdraw the submittal; or
- The responding firm submits documentation and an explanation of how the error was made.

CONE OF SILENCE

Respondents to this solicitation or persons acting on their behalf may not contact, between the release of the solicitation and the end of the 72-hour period following the agency posting the notice of intended award, excluding Saturdays, Sundays, and state holidays, any employee or officer of the executive or legislative branch concerning any aspect of this solicitation, except in writing to the procurement officer or as provided in the solicitation documents. Violation of this provision may be grounds for rejecting a response.

TERMINATION

The resulting contract may be canceled by the City when:

- Sufficient funds are not available to continue its full and faithful performance of this contract.
- There is sub-standard or non-performance of contract.
- The City wishes to terminate at any time and for any reason, upon giving thirty (30) days prior written notice to the other party.

The resulting contract may be canceled by either party in the event of substantial failure to perform in accordance with the terms by the other party through no fault of the terminating party.

FISCAL NON-FUNDING

If funds for the requested services described herein are not appropriated via the annual budget adoption process, the City reserves the right to cancel this Agreement immediately upon written notice to the vendor.

PROJECT RECORDS

The awarded firm shall maintain auditable records concerning the procurement to account for all receipts and expenditures, and to document compliance with the Contract. These records shall be kept in accordance with generally accepted accounting methods, and the City of St. Pete Beach reserves the right to determine the record-keeping method in the event of non-conformity. These records shall be maintained for three (3) years after final payment has been made and shall be readily available to City personnel with reasonable notice, and to other persons in accordance with the Florida Public Disclosure Statutes. Additionally, the awarded firm shall abide by and comply with Florida Statutes regarding public records. Specifically, the firm shall be aware of the provisions found in Section 119.0701, Florida Statutes.

Upon completion of the project, all reports, studies, recommendations, forms, and other project specific information will need to be submitted in paper and in an electronic file format (.PDF, .JPEG) on CD or USB storage device.

IV. REFERENCES & MINIMUM QUALIFICATIONS

Provide at least three (3) or more professional business references with which you have contracted to provide similar services in the past five (5) years. Include the name of the person, its organization and telephone number, fax number, and e-mail address. Include any governmental agencies, with the same contact and descriptive information for which you have provided similar service within the past five (5) years.

Provide a brief description of the history and capabilities of the firm. Describe the types of projects or services the firm performs/has performed and the dollar value of each. Provide information regarding your firm's ability to complete this project. Demonstrate that the firm's personnel have experience with similar projects.

Identify all unresolved and ongoing claims and disputes against your firm in excess of $500,000. Include any claims against the principals of your firm or any claims your company may have against a third party. Provide a history of litigation, including the outcomes, for the past five (5) years.

The responding firm shall provide a statement of assurance that the firm is not presently in violations of any statutes or regulatory rules that might have an impact on the firm's operations. All applicable laws and regulations of the State of Florida and ordinances and regulations of the City of St. Pete Beach will apply.

Provide the overall bonding capacity for the company and provide a history of any claims against the bidder's previous bonds for the past five (5) years.

The City shall be the sole final judge of qualifications of bidder to perform service and reserves the exclusive right to accept or reject any bid as it deems to be in the best interests of the City. The City reserves the right to make such investigation, as it deems necessary, to determine the ability of any proposer to perform the work or service requested. Failure to comply with the requirements of this section may be grounds for rejecting a response.

V. PUBLIC ENTITY CRIMINAL AFFIDAVIT

SWORN STATEMENT – PUBLIC ENTITY CRIMES

PURSUANT TO § 287.133 (3)(a), FLORIDA STATUTES, ON PUBLIC ENTITY CRIMES
THE FORM MUST BE SIGNED AND SWORN TO IN THE PRESENCE OF A NOTARY PUBLIC OR OTHER OFFICIAL AUTHORIZED TO ADMINISTER OATHS.

1. This sworn statement is submitted to: City of St. Pete Beach

   by: _____
   (Print individual's name and title)

   for: _____
   (Print name of entity submitting sworn statement)

   at: _____
   (Business address)

   and (if applicable), its Federal Employer Identification Number (FEIN):

   _____
   (FEIN)

   or, if the entity has no FEIN, include the Social Security Number:

   _____
   (SSN)

   by the individual signing this sworn statement:

   _____
   (Signature)

2. I understand that a "public entity crime" as defined in § 287.133 (1)(g), Fla. Stat., means a violation of any State or Federal law by a person with respect to and directly related to the transaction of business with any public entity or with an agency or political subdivision of any other state or of the United States including, but not limited to, any bid or contract for goods or services, any lease for real property, or any contract for the construction or repair of a public building or public work, involving antitrust, fraud, theft, bribery, collusion, racketeering, conspiracy, or material misrepresentation.

3. I understand that "convicted" or "conviction" as defined in § 287.133 (1)(b), Fla. Stat., means a finding of guilt or a conviction of public entity crime with or without an adjudication of guilt in any Federal or State trial court of record relating to charges brought by indictment or information after July 1, 1989, as a result of a jury verdict, non-jury trial, or entry of a plea of guilty or nolo contendere.

4. I understand that an "affiliate" as defined in § 287.133 (1)(a), Fla. Stat., means:
   a. A predecessor or successor of a person convicted of a public entity crime or
   b. An entity under the control of any natural person who is active in the management of the entity and who has been convicted of a public entity crime. The term "affiliate" includes those officers, directors, executives, partners, shareholders, employees, members, and agents who are active in the management of an affiliate. The ownership by one (1) person of shares constituting a controlling interest in another person or a pooling of equipment or income among persons when not for fair market value under the arm's length agreement, shall be a prima facie case that one (1) person controls another person. A person who

knowingly enters into a joint venture with a person who has been convicted of a public crime in Florida during the preceding thirty-six (36) months shall be considered an affiliate.

5. I understand that a "person" as defined in Section 287.133 (1)(e), Fla. Stat., means any natural person or any entity organized under the laws of any state or of the United States with the legal power to enter into a binding contract and which bids or applies to bid on contracts let by a public entity, or which otherwise transacts or applies to transact business with a public entity. The term "person" includes those officers, directors, executives, partners, shareholders, employees, members, and agents who are active in management of an entity.

6. Based on information and belief, the **statement which I have marked below is true** in relation to the entity submitting this sworn statement (indicate which statement applies).

☐ Neither the entity submitting this sworn statement, nor any of its officers, directors, executives, partners, shareholders, employees, members, or agents who are active in the management of the entity nor any affiliate of the entity has been charged with and convicted of a public entity crime subsequent to July 1, 1989.

☐ The entity submitting this sworn statement or one (1) or more of its officers, directors, executives, partners, shareholders, employees, members, or agents who are active in the management of the entity or an affiliate of the entity has been charged with and convicted of a public entity crime subsequent to July 1, 1989.

☐ The entity submitting this sworn statement or one (1) or more of its officers, directors, executives, partners, shareholders, employees, members, or agents who are active in the management of the entity or an affiliate of the entity has been charged with and convicted of a public entity crime subsequent to July 1, 1989. However, there has been a subsequent proceeding before a Hearing Office of the State of Florida, Division of Administrative Hearings and the Final Order entered by the Hearing Officer determined that it was not in the public interest to place the entity submitting this sworn statement on the convicted vendor list (attach a copy of the final order).

I UNDERSTAND THAT THE SUBMISSION OF THIS FORM TO THE CONTRACTING OFFICE FOR THE PUBLIC ENTITY IDENTIFIED IN PARAGRAPH 1 ABOVE IS FOR THE PUBLIC ENTITY ONLY AND THAT THIS FORM IS VALID THROUGH DECEMBER 31 OF THE CALENDAR YEAR IN WHICH IT IS FILED. I ALSO UNDERSTAND THAT I AM REQUIRED TO INFORM THE PUBLIC ENTITY PRIOR TO ENTERING INTO A CONTRACT IN EXCESS OF THE THRESHOLD AMOUNT PROVIDED IN SECTION 287.017, FLORIDA STATUTES, FOR CATEGORY TWO OF ANY CHANGE IN THE INFORMATION CONTAINED IN THIS FORM.

STATE OF FLORIDA
COUNTY OF _____

The foregoing instrument was sworn to (or affirmed), subscribed, and acknowledged before me **by means of ☐ physical presence or ☐ online notarization**, this _____ day of _____, 2026, by _____, who is personally known to me or has produced _____ as identification.

(SEAL)

_____
Notary Public – State of Florida

_____
(Print, Type, Stamp, or Commissioned Name of Notary Public)

VI. NON-COLLUSION AFFADAVIT

STATE OF _____

COUNTY OF _____

I state that I_____of_____,

(Name and Title) (Name of Firm)

am authorized to make this affidavit on behalf of my firm and its owner, directors and officers. I am the person responsible in my firm for the price(s) and amount(s) of this Response, and the preparation of the Response. I state that:

1. The price(s) and amount(s) of this Response have been arrived at independently and without consultation, communication or agreement with any other Provider, potential provider, Proposal, or potential Proposal.

2. Neither the price(s) nor the amount(s) of this Response, and neither the approximate price(s) nor approximate amount(s) of this Response, have been disclosed to any other firm or person who is a Provider, potential Provider, Proposal, or potential Proposal, and they will not be disclosed before Proposal opening.

3. No attempt has been made or will be made to induce any firm or persons to refrain from submitting a Response for this contract, or to submit a price(s) higher that the prices in this Response, or to submit any intentionally high or noncompetitive price(s) or other form of complementary Response.

4. The Response of my firm is made in good faith and not pursuant to any agreement or discussion with, or inducement from, any firm or person to submit a complementary or other noncompetitive Response.

5. _____, its affiliates, subsidiaries, officers, director, and employees (Name of Firm) are not currently under investigation, by any governmental agency and have not in the last three years been convicted or found liable for any act prohibited by State or Federal law in any jurisdiction, involving conspiracy or collusion with respect to Proposal, on any public contract, except as follows:

I state that I and the named firm understand and acknowledge that the above representations are material and important, and will be relied on by the State of Florida for which this Response is submitted. I understand and my firm understands that any misstatement in this affidavit is, and shall be treated as, fraudulent concealment from the State of Florida of the true facts relating to the submission of responses for this contract.

Name of Organization: _____

Signed By: _____

Print Name: _____

The foregoing instrument was sworn to (or affirmed), subscribed, and acknowledged before me **by means of ☐ physical presence or ☐ online notarization**, this ____ day of _____, 2026, by _____, who is personally known to me or has produced _____ as identification.

(SEAL)

_____
Notary Public – State of Florida

_____
(Print, Type, Stamp, or Commissioned
Name of Notary Public)

VII. SPECIFICATIONS

No additional information other than what has been provided under “Scope of Work"

EXHIBIT "C"

Vendor Bid/Proposal

(Place Vendor's Bid/Proposal Behind this Page)

April 6, 2026

Subject: Commercial Diving Services RFB Submission – SEE DIVE L.L.C. (D.B.A.) Underwater Asset Management.

Underwater Asset Management is pleased to submit a bid in response to the City's Request for Bid for Commercial Diving Services.

Underwater Asset Management brings experience in underwater inspection, repair, and salvage operations, including vessel systems, structural inspections, and complex rigging support. Our team has experience supporting marine and municipal systems through underwater inspections, debris and marine growth removal, and repair of structural and mechanical components. We utilize live video feed and digital capture to provide clear documentation and support informed decision-making.

We understand the City's need for a reliable, responsive contractor to support ongoing maintenance of tide check valves, stormwater outfalls, and related infrastructure. Our approach emphasizes safety, efficiency, and clear communication, with all diving operations performed in accordance with OSHA Commercial Diving Operations (29 CFR 1910 Subpart T) and applicable industry standards.

Underwater Asset Management is prepared to support both scheduled maintenance activities and emergency response needs, and to coordinate closely with City staff to ensure work is completed effectively and in accordance with project requirements.

We appreciate the opportunity to submit and look forward to supporting the City of St. Pete Beach.

Sincerely,

Kevin Austin, President
Underwater Asset Management
727-258-1254
kevin@operationsuam.com

Landon Lamaire, Vice President
Underwater Asset Management
727-417-5855
landon@operationsuam.com

I. CONTRACTOR'S BID SUBMITTAL

The company that is submitting a bid declares that it has extensive experience in **Commercial Diving Services.**

The undersigned, as Bidder, hereby declares that the only person or persons interested in the Bid as principal or principals are named herein, and that no person other than herein mentioned has any interest in the Bid or in the Agreement to be entered into; that this Bid or Agreement is made without connection with any other person, company, or parties making a Bid; and that it is in all respects fair and in good faith without collusion or fraud.

The Bidder further declares that they have examined the site of the work and informed themselves fully in regard to all conditions pertaining to the place where the work is to be done; that they have examined the Plans and Specifications for the work and Contract Documents relative thereto, and have read all special provisions furnished prior to the opening of bids; and that they have satisfied themselves relative to the materials to be supplied and work to be performed.

The Bidder proposes and agrees, if the Bid is accepted, to contract with the City of St. Pete Beach, Florida, in the form of an Agreement specified for **"Commercial Diving Services"** in St. Pete Beach, Florida, in full and complete accordance with the shown, noted, described, and reasonably intended requirements of the Plans, Specifications, and Contract Documents, to the full and entire satisfaction of the City of St. Pete Beach, Florida.

The successful bidder shall be required to utilize the template Agreement in this Request for Bids (RFB) and any questions regarding the Agreement must be addressed during the RFB process before submittal. The City reserves the right to respond or not respond to questions in the form of an addendum.

The Bidder proposes to furnish all materials, equipment, labor, and perform the work submitted in their bid schedule for the City of St. Pete Beach **" Commercial Diving Services".**

COMPANY: SEE DIVE L.L.C. (D.B.A.) Underwater Asset Management DATE: 04/06/2026

ADDRESS: 905 Candlebrook Ln. Brooksville FL, 34601 PHONE: 727-258-1254

BIDDER: _____ NAME: Kevin Austin, President
(SIGNATURE) *(PRINT NAME & TITLE)*

STATE OF FLORIDA
COUNTY OF HERNANDO

The foregoing instrument was sworn to (or affirmed), subscribed, and acknowledged before me **by means of ☑ physical presence or ☐ online notarization**, this 6 day of April, 2026, by Kevin Austin, who is personally known to me or has produced FL DL A235-516-65-131-0 as identification.

(SEAL)

_____
Notary Public – State of Florida

ALBERT KATONA
MY COMMISSION # HH 783870
EXPIRES: March 26, 2030

Albert Katona
(Print, Type, Stamp, or Commissioned Name of Notary Public)

SUBMIT BID TO:

Electronically via Bonfire Only

II. Bid Form

Pay Item	Description	Quantity	Unit	Unit Cost	Total Cost
Diver Team Labor					
	Three (3) Man Dive Team, Scheduled	40	Hour	$330.00	$ 13,200.00 -
	Three (3) Man Dive Team, Overtime	20	Hour	$495.00	$ 9,900.00 -
	Three (3) Man Dive Team, Unscheduled	40	Hour	$495.00	$ 19,800.00 -
	Additional Diver	8	Hour	$110.00	$ 880.00 -
	Additional Diver, Overtime	8	Hour	$165.00	$ 1,320.00 -
	Additional Diver, Unscheduled	8	Hour	$165.00	$ 1,320.00 -
	Written & Photo/Video Reports or Specialized Paperwork	10	Hour	$50.00	$ 500.00 -
	Emergency Call-Out Fee	1	Each	$0.00	$ 0.00 -
				Subtotal	**$** 46,920.00 -
Mobilization Rate, Per Occurrence					
	Mobilization Fee	5	Each	$60.00	$ 300.00 -
	Demobilization Fee	5	Each	$60.00	$ 300.00 -
				Subtotal	**$** 600.00 -
Equipment					
	Work Boat / Barge	20	Day	$250.00	$ 5,000.00 -
	Hydraulic Unit	20	Day	$150.00	$ 3,000.00 -
	4-inch Hydraulic Submersible Pump	20	Day	Included	$ 0.00 -
	Jet Pump	20	Day	$50.00	$ 1,000.00 -
	4,000 PSI Water Blaster	20	Day	$50.00	$ 1,000.00 -
	Digital Underwater Camera	20	Day	$50.00	$ 1,000.00 -
	Underwater Video with Digital Capture	20	Day	$100.00	$ 2,000.00 -
	Fuel Charge	20	Day	$100.00	$ 2,000.00 -
	Small Pneumatic Tool	20	Day	$10.00	$ 200.00 -
	Shallow Water Dive Package	20	Day	Included	$ 0.00 -
	Additional Equipment (Cost plus 15%)	1	LS		
				Subtotal	**$** 15,200.00 -
Materials					
	Additional Materials (Cost plus 15%)	1	LS		
				TOTAL	$ 62,720 -

** Scheduled labor is six (6) hour minimum onsite. Overtime is after eight (8) hours including nights, weekends, and holidays.*

SEE DIVE L.L.C. (D.B.A.) Underwater Asset Management – Capabilities Summary

Underwater Asset Management provides specialized commercial diving services focused on inspection, maintenance, and repair of subaqueous infrastructure. The company delivers safe, efficient, and well-documented underwater services aligned with municipal and marine system requirements.

Core capabilities include:

- Provision of qualified commercial dive teams and all necessary diving equipment to perform work safely and efficiently
- In-depth underwater inspections of stormwater outfalls, tide check valves, manatee grates, pipelines, piers, and structural components
- Live video feed to the surface with digital capture, allowing real-time observation and permanent documentation
- Preparation of written inspection reports, including photographic and video documentation, condition assessments, and maintenance recommendations
- Heavy cleaning of subaqueous structures, including debris removal and marine growth removal from valves, pipes, and structural elements
- Repair and maintenance of subaqueous infrastructure, including assistance with component replacement and system functionality restoration.
- Ability to support scheduled maintenance cycles as well as respond to emergency service requests within required timeframes.

All diving operations are conducted in accordance with OSHA Commercial Diving Operations (29 CFR 1910 Subpart T) and applicable industry standards, including ADCI Consensus Standards or equivalent.

Approach to Commercial Diving Services

Underwater Asset Management will provide responsive, safety-focused commercial diving services to support the City of St. Pete Beach's ongoing maintenance and inspection needs for stormwater outfalls, tide check valves, manatee grates, and associated infrastructure.

Understanding of Services

The requested services represent a recurring, maintenance-based program requiring reliable execution, efficient mobilization, and clear documentation. Work includes routine inspection,

debris and marine growth removal, minor repairs, and support for system performance and longevity. Services will be performed on an as-needed basis, including scheduled maintenance cycles and emergency response.

Dive Operations and Safety Compliance

All diving operations will be conducted in full compliance with:

- OSHA Commercial Diving Operations (29 CFS 1910 Subpart T)
- ADCI Consensus Standards (latest edition) or equivalent nationally recognized standards

See Dive LLC emphasizes disciplined dive planning, hazard awareness, and clear communication between dive team members and surface support personnel to ensure safe and efficient operations.

Inspection and Documentation

Underwater inspections will be conducted using diver-based assessments supported by:

- Live video feed to the surface for real-time observation by City personnel
- High-resolution digital video and photographic capture
- Structured reporting identifying observed conditions, deficiencies, and recommended actions

This approach ensures transparency, supports informed decision-making, and creates a consistent record of asset condition over time.

Cleaning and Maintenance

Underwater Asset Management will perform heavy/routine cleaning and maintenance of subaqueous structures, including:

- Removal of debris from valves, pipes, and outfalls
- Removal of marine growth impacting function or inspection visibility
- Maintenance of manatee grates and associated structures

Work will be executed using appropriate tools and methods to restore functionality while minimizing disturbance to surrounding infrastructure.

Repair and Support Services

Where required, Underwater Asset Management will provide repair and maintenance services to support system integrity, including minor repairs and assistance with component replacement. Experience with rigging, underwater systems, and structural components allows the team to address a wide range of field conditions.

Mobilization and Efficiency

Based on the distribution of assets and typical access conditions, Underwater Asset Management will prioritize efficient scheduling and grouping of work locations to minimize mobilization costs and maximize productivity. The team is equipped to perform work from both land-based access points and vessel-supported operations as well as remote access locations not accessible by vehicle as needed.

Responsiveness and Emergency Services

Underwater Asset Management understands the importance of timely response for municipal infrastructure. The team is prepared to:

- Support scheduled maintenance cycles
- Respond to unscheduled service requests
- Provide emergency response within required timeframes

Relevant Project Experience

Underwater Asset Management brings direct experience performing similar work, including:

- Salvage and rigging operations for submerged assets (Stuart Materials—Dredge Miss Amanda) $38,607.00 (03/20/2026)
- Removal and replacement of underwater cathodic protection systems (E.N. Bisso—Tug Trinity) $82,400.00 (02/26/2026)
- Inspection of pier berths for structural condition and navigation safety (A.R. Savage – Pier Inspection Berth 150) $3,600.00 (03/26/2026)
- Inspection of running gear and hull for damage for transfer of ownership (A.R. Savage-M/V Sea Eagle) $3,700.00 (02/19/2026)

These projects demonstrate the team’s ability to perform inspection, maintenance, and complex underwater tasks in real-world conditions.

Statement of Assurance and Bonding Capacity

Underwater Asset Management affirms that it has the personnel, equipment, and operational capability to perform the services described in this Request for Bid in a safe, timely, and professional manner.

The company maintains all required insurance coverage and operates in compliance with applicable federal, state, and local regulations governing commercial diving operations.

Underwater Asset Management is capable of obtaining bonding, if required, and will provide any necessary performance or payment bonds upon request by the City.

Stuart Materials—Dredge Miss Amanda

Client: Stuart Materials

Project Type/Value: Marine Salvage and Recovery / $38,607

Location: Moore Haven, Florida

Project Description:

Underwater Asset Management was engaged to assess and support the recovery of a sunken dredge barge (Miss Amanda). The project required evaluation of site conditions, development of a safe and effective rigging plan, and execution support for the salvage operation.

Scope of Services

- Underwater assessment of sunken barge condition and positioning
- Development of rigging approach for recovery
- Installation and adjustment of rigging systems
- Assistance with controlled lift and removal using lift bags
- Coordination with topside crew during salvage operations

Key Challenges

- Limited visibility and complex underwater conditions
- Stabilization and controlled lifting of a submerged structure
- Ensuring safe rigging configuration under variable loads

Outcome

- Successful recovery of the submerged barge
- Safe execution of lift operations without incident
- Efficient coordination between dive team and surface crew

Relevance to This Project

Demonstrates Underwater Asset Management's ability to:

- Perform complex underwater operations
- Develop and execute rigging plans
- Operate safely in low-visibility, high-risk environments

E.N. Bisso—Tug Trinity

Client: E.N. Bisso

Project Type/Value: Underwater System Repair / $82,400

Location: Tampa, Florida

Project Description:

Underwater Asset Management performed removal and replacement of an impressed current cathodic protection (ICCP) system on the tug Trinity. The work required precision, technical knowledge, and careful coordination to maintain vessel integrity.

Scope of Services

- Removal of existing cathodic protection components
- Installation of new ICCP system components
- Inspection of mounting points and associated infrastructure
- Verification of proper installation and system functionality

Key Challenges

- Working within confined and sensitive vessel structures
- Maintaining system integrity during removal and replacement
- Ensuring proper alignment and installation of new components

Outcome

- Successful installation of updated cathodic protection system
- Improved corrosion protection for vessel infrastructure
- Work completed efficiently and safely

Relevance to This Project

Demonstrates Underwater Asset Management's ability to:

- Perform technical underwater repair and installation
- Work on critical infrastructure systems
- Execute precise, detail-oriented tasks

A.R. Savage—Pier Inspection Berth 150

Client: A.R. Savage

Project Type/Value: Underwater Inspection / $3,600

Location: Tampa, Florida

Project Description:

Underwater Asset Management conducted a detailed underwater inspection of a pier at Port Tampa Bay Berth 150 to evaluate structural condition and identify potential hazards to vessel operations.

Scope of Services

- Visual inspection of submerged structural components
- Identification of damage, deterioration, and obstructions
- Assessment of potential navigation hazards
- Documentation of findings for client review

Key Challenges

- Identify structural issues in low-visibility conditions
- Ensuring comprehensive coverage of berth area
- Communicating findings clearly for operation decision-making

Outcome

- Identification of key areas requiring attention
- Improved understanding of berth condition and safety risks
- Delivery of actionable inspection results

Relevance to This Project

Demonstrates Underwater Asset Management's ability to:

- Conduct thorough underwater inspections
- Identify hazards affecting infrastructure and navigation
- Provide clear, usable information to support maintenance decisions

Reference list for Underwater Asset Management:

A.R. Savage & Son:

Stephen Clouse

813-309-1033

savship@arsavage.com

Stewart Materials:

Roger Burns

863-307-7422

roger@stewartmaterials.com

E.N. Bisso:

Mike Hoffpauir

813-508-1255

mhoffpauir@enbisso.com

V. PUBLIC ENTITY CRIMINAL AFFIDAVIT

SWORN STATEMENT – PUBLIC ENTITY CRIMES

PURSUANT TO § 287.133 (3)(a), FLORIDA STATUTES, ON PUBLIC ENTITY CRIMES
THE FORM MUST BE SIGNED AND SWORN TO IN THE PRESENCE OF A NOTARY PUBLIC OR OTHER OFFICIAL AUTHORIZED TO ADMINISTER OATHS.

1. This sworn statement is submitted to: City of St. Pete Beach

by: Kevin Austin, President
(Print individual's name and title)

for: SEE DIVE L.L.C. (D.B.A.) Underwater Asset Management
(Print name of entity submitting sworn statement)

at: 905 Candlebrook LN Brooksville FL, 34601
(Business address)

and (if applicable), its Federal Employer Identification Number (FEIN):

86-2492372
(FEIN)

or, if the entity has no FEIN, include the Social Security Number:

(SSN)

by the individual signing this sworn statement:

(Signature)

2. I understand that a "public entity crime" as defined in § 287.133 (1)(g), Fla. Stat., means a violation of any State or Federal law by a person with respect to and directly related to the transaction of business with any public entity or with an agency or political subdivision of any other state or of the United States including, but not limited to, any bid or contract for goods or services, any lease for real property, or any contract for the construction or repair of a public building or public work, involving antitrust, fraud, theft, bribery, collusion, racketeering, conspiracy, or material misrepresentation.

3. I understand that "convicted" or "conviction" as defined in § 287.133 (1)(b), Fla. Stat., means a finding of guilt or a conviction of public entity crime with or without an adjudication of guilt in any Federal or State trial court of record relating to charges brought by indictment or information after July 1, 1989, as a result of a jury verdict, non-jury trial, or entry of a plea of guilty or nolo contendere.

4. I understand that an "affiliate" as defined in § 287.133 (1)(a), Fla. Stat., means:
   a. A predecessor or successor of a person convicted of a public entity crime or
   b. An entity under the control of any natural person who is active in the management of the entity and who has been convicted of a public entity crime. The term "affiliate" includes those officers, directors, executives, partners, shareholders, employees, members, and agents who are active in the management of an affiliate. The ownership by one (1) person of shares constituting a controlling interest in another person or a pooling of equipment or income among persons when not for fair market value under the arm's length agreement, shall be a prima facie case that one (1) person controls another person. A person who

knowingly enters into a joint venture with a person who has been convicted of a public crime in Florida during the preceding thirty-six (36) months shall be considered an affiliate.

5. I understand that a "person" as defined in Section 287.133 (1)(e), Fla. Stat., means any natural person or any entity organized under the laws of any state or of the United States with the legal power to enter into a binding contract and which bids or applies to bid on contracts let by a public entity, or which otherwise transacts or applies to transact business with a public entity. The term "person" includes those officers, directors, executives, partners, shareholders, employees, members, and agents who are active in management of an entity.

6. Based on information and belief, the **statement which I have marked below is true** in relation to the entity submitting this sworn statement (indicate which statement applies).

[X] Neither the entity submitting this sworn statement, nor any of its officers, directors, executives, partners, shareholders, employees, members, or agents who are active in the management of the entity nor any affiliate of the entity has been charged with and convicted of a public entity crime subsequent to July 1, 1989.

[ ] The entity submitting this sworn statement or one (1) or more of its officers, directors, executives, partners, shareholders, employees, members, or agents who are active in the management of the entity or an affiliate of the entity has been charged with and convicted of a public entity crime subsequent to July 1, 1989.

[ ] The entity submitting this sworn statement or one (1) or more of its officers, directors, executives, partners, shareholders, employees, members, or agents who are active in the management of the entity or an affiliate of the entity has been charged with and convicted of a public entity crime subsequent to July 1, 1989. However, there has been a subsequent proceeding before a Hearing Office of the State of Florida, Division of Administrative Hearings and the Final Order entered by the Hearing Officer determined that it was not in the public interest to place the entity submitting this sworn statement on the convicted vendor list (attach a copy of the final order).

I UNDERSTAND THAT THE SUBMISSION OF THIS FORM TO THE CONTRACTING OFFICE FOR THE PUBLIC ENTITY IDENTIFIED IN PARAGRAPH 1 ABOVE IS FOR THE PUBLIC ENTITY ONLY AND THAT THIS FORM IS VALID THROUGH DECEMBER 31 OF THE CALENDAR YEAR IN WHICH IT IS FILED. I ALSO UNDERSTAND THAT I AM REQUIRED TO INFORM THE PUBLIC ENTITY PRIOR TO ENTERING INTO A CONTRACT IN EXCESS OF THE THRESHOLD AMOUNT PROVIDED IN SECTION 287.017, FLORIDA STATUTES, FOR CATEGORY TWO OF ANY CHANGE IN THE INFORMATION CONTAINED IN THIS FORM.

STATE OF FLORIDA
COUNTY OF HERNANDO

The foregoing instrument was sworn to (or affirmed), subscribed, and acknowledged before me **by means of** ☑ **physical presence or** ☐ **online notarization**, this 6 day of April, 2026, by Kevin Austin, who is personally known to me or has produced FL DL A235-516-65-131-0 as identification.

(SEAL)

ALBERT KATONA
MY COMMISSION # HH 783870
EXPIRES: March 26, 2030

Albert Katona
Notary Public – State of Florida

Albert Katona
(Print, Type, Stamp, or Commissioned Name of Notary Public)

VI. NON-COLLUSION AFFADAVIT

STATE OF FLORIDA

COUNTY OF HERNANDO

I state that I Kevin Austin, President of SEE DIVE L.L.C. (D.B.A.) Underwater Asset Management,
(Name and Title) (Name of Firm)
am authorized to make this affidavit on behalf of my firm and its owner, directors and officers. I am the person responsible in my firm for the price(s) and amount(s) of this Response, and the preparation of the Response. I state that:

1. The price(s) and amount(s) of this Response have been arrived at independently and without consultation, communication or agreement with any other Provider, potential provider, Proposal, or potential Proposal.

2. Neither the price(s) nor the amount(s) of this Response, and neither the approximate price(s) nor approximate amount(s) of this Response, have been disclosed to any other firm or person who is a Provider, potential Provider, Proposal, or potential Proposal, and they will not be disclosed before Proposal opening.

3. No attempt has been made or will be made to induce any firm or persons to refrain from submitting a Response for this contract, or to submit a price(s) higher that the prices in this Response, or to submit any intentionally high or noncompetitive price(s) or other form of complementary Response.

4. The Response of my firm is made in good faith and not pursuant to any agreement or discussion with, or inducement from, any firm or person to submit a complementary or other noncompetitive Response.

5. Underwater Asset Management, its affiliates, subsidiaries, officers, director, and employees (Name of Firm) are not currently under investigation, by any governmental agency and have not in the last three years been convicted or found liable for any act prohibited by State or Federal law in any jurisdiction, involving conspiracy or collusion with respect to Proposal, on any public contract, except as follows:

I state that I and the named firm understand and acknowledge that the above representations are material and important, and will be relied on by the State of Florida for which this Response is submitted. I understand and my firm understands that any misstatement in this affidavit is, and shall be treated as, fraudulent concealment from the State of Florida of the true facts relating to the submission of responses for this contract.

Name of Organization: SEE DIVE L.L.C. (D.B.A.) Underwater Asset Management

Signed By: Kevin Austin

Print Name: Kevin Austin

The foregoing instrument was sworn to (or affirmed), subscribed, and acknowledged before me **by means of ☐ physical presence or ☐ online notarization**, this 6 day of April, 2026, by Kevin Austin, who is personally known to me or has produced FL DL A235-516-45-131-0 as identification.

(SEAL)

ALBERT KATONA
MY COMMISSION # HH 783870
EXPIRES: March 26, 2030

Albert Katona
Notary Public – State of Florida

Albert Katona
(Print, Type, Stamp, or Commissioned Name of Notary Public)

EXHIBIT "D"

Conditional Federal/Grant-Funded Contract Addendum

(Place Conditional Federal/Grant-Funded Contract Addendum behind this page)

EXHIBIT "D"
CONDITIONAL FEDERAL/GRANT-FUNDED CONTRACT ADDENDUM

1. Applicability

1.1 This Exhibit applies only if activated under Section 25 of the Agreement or under a Task Order. If not activated, this Exhibit is reserved and has no operative effect.
1.2 If activated, this Exhibit supplements the Agreement and applies to the federally funded or grant-funded Work only. Contractor shall comply with all applicable requirements of the federal award, grant agreement, pass-through entity, program rules, and applicable law.
1.3 The City may provide additional award-specific clauses, certifications, forms, wage determinations, reporting requirements, or flow-down provisions. Contractor shall comply with such requirements as a condition of performing the affected Work and receiving payment from the applicable funding source.

2. Federal Award and Grant Information

Federal/Grant Program: [insert]
Federal Awarding Agency: [insert]
Pass-Through Entity: [insert, if applicable]
Assistance Listing Number: [insert, if applicable]
Federal Award Identification Number: [insert, if applicable]
Award or Disaster Declaration Date: [insert, if applicable]
Project Number: [insert]
Special Award Conditions: [insert or attach]

3. Remedies for Breach

For contracts exceeding the simplified acquisition threshold, Contractor acknowledges that the City may exercise all administrative, contractual, legal, and equitable remedies available under the Contract Documents and applicable law if Contractor violates or breaches contract terms. Remedies may include withholding payment, requiring correction, suspension of Work, termination, procurement from alternate sources, damages, sanctions, and any other appropriate remedy.

4. Termination for Cause and Convenience

For contracts in excess of $10,000, the City may terminate the federally funded or grant-funded Work for cause or convenience as provided in the Agreement. The notice of termination will identify the effective date and the manner of termination. Contractor shall be paid only for authorized Work satisfactorily performed before the effective date of termination, subject to documentation, offsets, allowable cost requirements, and applicable grant rules.

5. Equal Employment Opportunity

Except as otherwise provided under 41 C.F.R. Part 60, if the Work is a federally assisted construction contract as defined in 41 C.F.R. § 60-1.3, Contractor shall comply with the equal opportunity clause in 41 C.F.R. § 60-1.4(b), which is incorporated by reference as if fully set forth

RESERVED

herein, and shall include the required clause in covered subcontracts and purchase orders.

6. Davis-Bacon Act and Copeland Anti-Kickback Act

When required by federal program legislation, all prime construction contracts in excess of $2,000 must include compliance with the Davis-Bacon Act, 40 U.S.C. §§ 3141-3148, as supplemented by Department of Labor regulations at 29 C.F.R. Part 5. If Davis-Bacon applies, Contractor shall pay laborers and mechanics at rates not less than the applicable wage determination, pay wages not less than once per week, submit certified payrolls if required, and comply with all applicable labor standards.
If Davis-Bacon applies, Contractor shall also comply with the Copeland "Anti-Kickback" Act, 40 U.S.C. § 3145, as supplemented by 29 C.F.R. Part 3, and shall not induce any person employed in the construction, completion, or repair of public work to give up any part of compensation to which the person is entitled. Contractor shall report suspected or reported violations to the City.

7. Contract Work Hours and Safety Standards Act

Where applicable, for contracts in excess of $100,000 that involve the employment of mechanics or laborers, Contractor shall comply with 40 U.S.C. §§ 3702 and 3704, as supplemented by Department of Labor regulations at 29 C.F.R. Part 5. Contractor shall compute wages based on a standard 40-hour workweek and shall compensate covered workers at not less than one and one-half times the basic rate of pay for hours worked in excess of 40 hours in a workweek. No laborer or mechanic shall be required to work under unsanitary, hazardous, or dangerous conditions. These requirements do not apply to purchases of supplies, materials, or articles ordinarily available on the open market, or to contracts for transportation or transmission of intelligence.

8. Rights to Inventions

If the federal award meets the definition of "funding agreement" under 37 C.F.R. § 401.2(a), and the Work involves substitution of parties, assignment, or performance of experimental, developmental, or research work under that funding agreement, Contractor shall comply with 37 C.F.R. Part 401 and any implementing regulations issued by the awarding agency.

9. Clean Air Act and Federal Water Pollution Control Act

For contracts and subgrants exceeding $150,000, Contractor shall comply with all applicable standards, orders, and regulations issued pursuant to the Clean Air Act, 42 U.S.C. §§ 7401-7671q, and the Federal Water Pollution Control Act, 33 U.S.C. §§ 1251-1387. Contractor shall report each violation to the City, and the City will report violations as required to the federal awarding agency and the appropriate EPA regional office. Contractor shall include these requirements in each covered subcontract exceeding $150,000.

10. Debarment and Suspension

Contractor shall comply with Executive Orders 12549 and 12689 and 2 C.F.R. Part 180. Contractor shall not enter into covered transactions with parties listed on the governmentwide exclusions in the System for Award Management. Contractor shall verify that Contractor, its principals, and its affiliates are not excluded or disqualified and shall include this requirement in lower-tier covered

RESERVED

transactions.

11. Byrd Anti-Lobbying Amendment

For awards exceeding $100,000, Contractor shall comply with the Byrd Anti-Lobbying Amendment, 31 U.S.C. § 1352. Contractor shall certify that it has not and will not use federal appropriated funds to pay any person or organization for influencing or attempting to influence an officer or employee of an agency, a member of Congress, an officer or employee of Congress, or an employee of a member of Congress in connection with obtaining a federal contract, grant, or other covered award. Contractor shall disclose lobbying with non-federal funds as required and shall require each lower tier to make the same certification and disclosure.

12. Procurement of Recovered Materials

Contractor shall comply with 2 C.F.R. § 200.323 and Section 6002 of the Solid Waste Disposal Act, as amended by the Resource Conservation and Recovery Act, to the extent applicable. Contractor shall procure designated items containing the highest percentage of recovered materials practicable, consistent with competition and performance requirements, when the purchase price exceeds the applicable threshold or the value of the quantity acquired during the preceding fiscal year exceeded the applicable threshold. Contractor shall also procure solid waste management services in a manner that maximizes energy and resource recovery and shall support the City's affirmative procurement program where applicable.

13. Domestic Preferences for Procurements

As appropriate and to the extent consistent with law, Contractor shall comply with 2 C.F.R. § 200.322 by providing a preference for the purchase, acquisition, or use of goods, products, or materials produced in the United States, including iron, aluminum, steel, cement, and other manufactured products, when the Work is performed under a federal award.

14. Prohibition on Certain Telecommunications and Video Surveillance Equipment or Services

Contractor shall comply with 2 C.F.R. § 200.216 and shall not obligate or expend federal funds to procure, obtain, extend, renew, or enter into a contract to procure or obtain covered telecommunications equipment or services as a substantial or essential component of any system or as critical technology as part of any system. Contractor shall include this prohibition in applicable subcontracts and purchase orders.

15. Build America, Buy America

If the Work is an infrastructure project funded by a federal financial assistance program subject to the Build America, Buy America Act, Contractor shall comply with all applicable domestic content procurement preference requirements for iron, steel, manufactured products, and construction materials permanently incorporated into the project, unless a waiver applies. Contractor shall provide certifications, documentation, and product information required by the City, funding agency, or pass-through entity.

16. Small and Minority Businesses, Women's Business Enterprises, Veteran-Owned Businesses,

RESERVED

and Labor Surplus Area Firms

Contractor shall take the affirmative steps required by 2 C.F.R. § 200.321 to assure that small businesses, minority businesses, women's business enterprises, veteran-owned businesses, and labor surplus area firms are used when possible, including, as applicable, placing such businesses on solicitation lists, soliciting them when they are potential sources, dividing requirements when economically feasible, establishing delivery schedules that encourage participation, using appropriate assistance organizations, and requiring subcontractors to take the same affirmative steps.

17. Bonding Requirements for Federal Construction or Facility Improvement Contracts

For construction or facility improvement contracts or subcontracts exceeding the simplified acquisition threshold, Contractor shall comply with the bonding requirements in 2 C.F.R. § 200.326 when the federal award requires such bonding, including bid guarantee, performance bond, and payment bond requirements unless the federal agency or pass-through entity determines that the City's bonding policy and requirements adequately protect the federal interest.

18. Access to Records; Retention

Contractor shall provide the City, the federal awarding agency, the pass-through entity, the Comptroller General of the United States, and their authorized representatives access to any documents, papers, records, and other materials that are directly pertinent to the federal or grant-funded Work for the purpose of making audits, examinations, excerpts, and transcriptions. Contractor shall retain records for the period required by 2 C.F.R. Part 200, the award terms, the Agreement, and applicable law, whichever is longer.

19. No Obligation by Federal Government

The federal government is not a party to this Agreement or any Task Order and is not subject to any obligations or liabilities to the City, Contractor, or any other party arising from the Agreement or Work.

20. Program Fraud and False or Fraudulent Statements

Contractor acknowledges that 31 U.S.C. Chapter 38 and other federal laws concerning fraud, false claims, and false statements may apply to Contractor's actions pertaining to federally funded or grant-funded Work. Contractor shall not submit false, fictitious, fraudulent, or misleading claims, certifications, invoices, records, or statements.

21. Additional Award-Specific Terms

If the federal awarding agency, pass-through entity, grant agreement, disaster assistance program, or other funding source requires additional clauses, certifications, forms, reporting, wage determinations, environmental/historic preservation conditions, civil rights provisions, procurement certifications, or other requirements, such requirements are incorporated into the affected Task Order upon written notice by the City. Contractor shall execute additional documents reasonably required by the City to document compliance.

RESERVED

CITY COMMISSION MEETING
CITY OF ST. PETE BEACH
COMMISSION CHAMBERS

Agenda Report

Agenda Title Name: Authorize the City Manager to execute a Services Agreement with Dive-Tech International, Inc. for Commercial Diving Services in the amount not to exceed $50,000 annually.

Action Request: Motion to authorize the City Manager to execute a Services Agreement with Dive-Tech International, Inc. for Commercial Diving Services in the amount not to exceed $50,000 annually.

Strategic Objective: Reliable Infrastructure

Date: June 23, 2026

Prepared By: Camden Mills, Public Services Director

Through: Frances Robustelli, City Manager

Summary of Issue: The City publicly advertised a Request for Bid (RFB) for qualified full-service commercial diving Contractors with experience in a wide range of applications. Eleven (11) responsive sealed bids were received on April 8, 2026. Dive-Tech International Inc., Free Agent Marine LLC, and See Dive LLC, were determined to be the lowest responsive and responsible bidders meeting all City qualification requirements.

The contract provides not-to-exceed unit prices for a qualified dive team, and all related diving equipment required to assist the City of St. Pete Beach with the cleaning, inspection, repair and maintenance of tide check valves, stormwater outfalls, manatee grates, subaqueous pipelines, piers, piles, and bulkheads. Services include:

- Debris Removal from Valve, Pipe, Endwalls, and Pit
- Marine Growth Removal from Valve, Pipe, Endwalls, and Pit
- Maintenance of Manatee Grates
- Written and Video Reports of condition per cycle
- Repair and Replacement of in-line and outfall-end type Tidal Check Valves
- Hydraulic Dredging

Work will be issued by task order on an as-needed basis, in an amount not to exceed $50,000 per year, subject to budgeted funds.

The initial agreement term is three (3) years, with up to two (2) additional one (1) year renewal options upon mutual agreement and annual appropriation.

Funding: 403.5380.546000 – Stormwater R&M Equipment ($287,996.80 remaining balance)

401.5350.546000 – Wastewater R&M Equipment ($102,791.25 remaining balance)

Attachments: 1. Dive-Tech International, Inc Agreement Signed

CITY OF ST. PETE BEACH, FLORIDA
SERVICES AGREEMENT

Commercial Diving Services

This is an Agreement (the "Agreement") entered into by and between the **CITY OF ST. PETE BEACH** (hereinafter "City") and (**DIVE-TECH INTERNATIONAL INC.**). (hereinafter "Contractor"). The City and Contractor together shall be referred to as the "parties."

WHEREAS, The City properly issued a Request for Bids, attached and incorporated hereto as Exhibit "B" and the City Commission authorized the selection of Contractor at its June 23, 2026, public hearing.

WHEREAS, City desires to purchase from Contractor the services described in this Agreement.

WHEREAS, Contractor is in the business of providing the services described herein, and has submitted an appropriate proposal to the City to provide the same.

WHEREAS, this Agreement has been properly approved by the appropriate authority of the City and the Contractor.

NOW, THEREFORE, upon the mutual covenants contained herein, and other good and valuable considerations, the sufficiency of which is hereby acknowledged, the parties hereto hereby agree to the following:

1. Recitals. The foregoing recitals are true and correct and incorporated herein by reference.

2. Standard Contract Addendum. The attached Standard Contract Addendum, which contains all the Florida Statutorily required provisions applicable to this Agreement, is attached hereto as Exhibit "A" and its provisions modify and supplement this Agreement.

3. Scope of Services. The Contractor must perform all work for the City required by the contract documents as set forth below:

   a. Contractor will furnish all labor, materials, and equipment necessary as indicated in the Request for Bids (Exhibit "B") in the amount of Not To Exceed $50,000.

   b. Contractor must supervise the workforce to ensure that all workers conduct themselves and perform their work in a safe and professional manner. Contractor must comply with all OSHA safety rules and regulations in the operation of equipment and in the performance of the work. Contractor must at all times have a competent field supervisor on the job site to enforce these policies and procedures at the Contractor's expense.

   c. Contractor will provide the City with seventy-two (72) hours written notice prior to the beginning of work under this Agreement and prior to any schedule change with the exception of changes caused by inclement weather.

   d. Contractor must comply with any and all Federal, State, and local laws and regulations

now in effect, or hereinafter enacted during the term of this Agreement, which are applicable to the Contractor, its employees, agents or subcontractors, if any, with respect to the work and services described herein. The Contractor further warrants that there has been no violation of copyrights or patent rights either in the United States of America or in foreign countries in connection with the work of the contract.

e. Contractor warrants to the City that all goods and materials furnished under the contract will be new unless otherwise specified and that contractor possesses good, clear, and marketable title to said goods and there are no pending liens, claims, or encumbrances whatsoever against said goods. All work not conforming to these requirements, including substitutions not properly approved and authorized may be considered defective. Contractor further warrants that all goods, materials and workmanship furnished, whether furnished by the Contractor or its subcontractors and suppliers, will comply with the specifications, drawings and other descriptions supplied or adopted. Last, Contractor warrants all material and workmanship for a minimum of (1) year from date of project completion and acceptancy by the City. If within one (1) year after acceptance by the City, or within such larger period of time as may be prescribed by law any of the work is found to be defective or not in accordance with the contract documents, the Contractor will, after receipt of a written notice from the City to do so, promptly correct the work.

4. Damages. Time is of the essence in the performance of this Agreement. City shall be entitled to liquidated damages in the amount of $500 per day, for each day after the date set forth in paragraph 10, that Contractor has failed to properly and completely deliver all goods or provide all service specified herein. The Contractor specifically acknowledges that the foregoing sum is reasonable and does not constitute a penalty.

5. Remedies.

   a. Damages. The City reserves the right to recover any ascertainable actual damages incurred as a result of the failure of the Contractor to perform in accordance with the requirements of this Agreement, or for losses sustained by the city resultant from the Contractor's failure to perform in accordance with the requirements of this Agreement.

   b. Correction of Work. If, in the judgment of the City, work provided by the Contractor does not conform to the requirements of this Agreement, or if the work exhibits poor workmanship, the city reserves the right to require that the Contractor correct all deficiencies in the work to bring the work into conformance without additional cost to the City, and/or replace any personnel who fail to perform in accordance with the requirements of this Agreement. The City is the sole judge of non-conformance and the quality of workmanship.

6. Waiver of Liens. Prior to final payment of the Contract Sum, a final waiver of lien must be submitted by all suppliers, subcontractors, and/or Contractors who worked on the project that is the subject of this Agreement.

7. Warranties.
   a. Warranty of Title. Contractor warrants to the City that all goods and materials furnished

under the contract will be new unless otherwise specified and that Contractor possesses good, clear, and marketable title to said goods and there are no pending liens, claims, or encumbrances whatsoever against said goods. All work not conforming to these requirements, including substitutions not properly approved and authorized may be considered defective.

b. Warranty of Specifications. The Contractor warrants that all goods, materials, workmanship furnished, whether by the Contractor or its subcontractors and suppliers, will comply with the specifications, drawings and other descriptions supplied or adopted.

c. Warranty of Merchantability. The Contractor warrants all material and workmanship for a minimum of one (1) year from date of project completion and acceptance by the City. If within one (1) year after acceptance by the city, or within such larger period of time as may be described by law any of the work is found to be defective or not in accordance with the contract documents, the Contractor must after receipt of a written notice from the City to do so, promptly correct the work unless the City has previously given the Contractor a written acceptance of such condition.

8. Term. This Agreement will remain in effect for a period of (3) three years with (2) two, (1) one-year extensions from the Effective Date.

9. Effective date. The "Effective Date" of this Agreement shall be the date this Agreement has been executed by all parties.

10. Termination. This Agreement may be canceled by the City when:
   a. Sufficient funds are not available to continue its full and faithful performance to the Agreement.
   b. Sub-standard or non-performance of Agreement.
   c. The City wishes to terminate the Agreement at any time and for any reason, upon giving thirty (30) days prior written notice to the Contractor.

11. Fiscal Non-funding. If funds for the requested services described herein are not appropriated via the annual budget adoption process, the City reserves the right to cancel the Agreement immediately upon written notice to the Contractor.

12. Non-Exclusivity. Contractor acknowledges that the City may enter into agreements with other consultants or may have its own employees complete the work for services similar to the services that are subject to this Agreement.

13. Compensation. Upon Contractor's satisfactory full performance of the services or in accordance with the payment schedule provided in the attached proposal, City shall pay Contractor, as full consideration for services provided in this Agreement.

14. Insurance. To the extent that this Agreement requires Contractor to provide any services of any kind, Contractor and all of Contractor's subcontractors shall maintain public liability insurance in a combined single limit for bodily injury and property damage in the amount of not less than $1,000,000.00, satisfactory to the City Manager, naming the City as an additionally named insured and providing coverage up through and including the final performance of any services provided

herein. Contractor and all of Contractor's subcontractors shall maintain in full force and effect a policy of worker's compensation insurance for all of Contractor's employees in accordance with applicable state and federal law. Said insurance coverage shall include employer's liability with a single limit of $100,000.00 per accident or occurrence. Contractor shall present City with a certificate for all the foregoing insurance, at the time of executing this Agreement and at such other times requested by the City.

The Contractor waives all rights against the City, its consultants, separate contractors, if any, and any of its subcontractors, agents and employees, for any and all damages caused to the extent covered by insurance described herein and obtained pursuant to this Section or other property insurance applicable to the services and product provided under this Agreement. The City shall require of the Contractor, Contractor's consultants, separate contractors, if any, and the subcontractors, sub-subcontractors, agents and employees of any of them, by appropriate agreements, written where legally required for validity, similar waivers each in favor of other parties enumerated herein. The policies shall provide such waiver of subrogation by endorsement otherwise. A waiver of subrogation shall be effective as to a person or entity even though that person or entity would otherwise have a duty of indemnification, contractual or otherwise, did not pay the insurance premium directly or indirectly, and whether or not the person or entity had an insurable interest in the property damaged.

15. Indemnification. In consideration of the payment of ten dollars as part of the compensation described herein, such sum being specifically found by Contractor to be sufficient consideration for this indemnification, Contractor shall indemnify, defend and hold the City harmless for itself, its past/present/future elected and appointed officials, its employees, agents and assigns, from and against any and all losses, claims, damages, suits, actions, liability or demands, including attorneys' fees and costs of litigation through all appellate proceedings, arising from the performance or non-performance of this Agreement, whether caused in part by the City or not, and in connection with violations of copyrighted or trademarked materials used by Contractor, loss of life, bodily or personal injury, or property damage, including loss of use thereof, directly or indirectly caused by, resulting from, arising out of or occurring in connection with the operations of the Contractor or its officers, employees, agents, subcontractors, or independent Contractors, excepting only such loss of life, bodily or personal injury, or property damage solely attributable to the gross negligence or willful misconduct of the City or its elected or appointed officials and employees. In any and all claims against the City, or any of their agents or employees by any employee of the Contractor any subcontractor, anyone directly or indirectly employed by any of them or anyone for whose acts any of them may be liable, the indemnification obligation under this paragraph is not limited in any way by any limitation in this amount or type of damages compensation or benefits payable by or for the Contractor or any subcontractor under Workers' Compensation Acts, Disability Benefit Acts or other Employee Benefit Acts. Nothing contained herein is intended nor may it be construed, to waive City's rights and immunities under the common law or Section 768.28, Florida Statutes, as amended from time to time; nor will anything included herein be construed as consent to be sued by any third parties in any matter arising out of this Agreement. To the extent considered necessary by the Contract Administrator and the City Attorney, any sums due Contractor under this Agreement may be retained by the City until all of the City's claims subject to this indemnification obligation have been settled or otherwise resolved, and any amount withheld is not subject to payment of interest by the City. The above provisions

will survive the termination or expiration of this Agreement and will pertain to any occurrence during the term of this Agreement, even though the claim may be made after the termination or expiration hereof.

16. Discriminatory Vendor List. Contractor hereby acknowledges its continuous duty to disclose to the City if the Contractor or any of its affiliates, as defined by Section 287.134 (1)(a), Florida Statutes, are placed on the Discriminatory Vendor List. Pursuant to Section 287-134 (2)(a), Florida Statutes: "An entity or affiliate who has been placed on the discriminatory vendor list may not submit a bid, proposal, or reply on a contract to a public entity; may not submit a bid or proposal, or reply on a contract with a public entity for the construction or repair of a public building or public work; may not submit bids, proposals, or replies on leases of real property to a public entity; may not be awarded or perform work as a contractor, supplier, subcontractor, or consultant under a contract with any public entity; and may not transact business with any public entity."

17. Independent Contractor. This Agreement does not create an employee/employer relationship between the parties. It is the intent of the parties that the Contractor is an independent contractor under this Agreement and not the City's employee for any purposes, including but not limited to, the application of the Fair Labor Standards Act minimum wage and overtime payments, Federal Insurance Contribution Act, the Social Security Act, the Federal Unemployment Tax Act, the provisions of the Internal Revenue Code, the State Worker's Compensation Act, and the State Unemployment Insurance law. The Contractor will retain sole and absolute discretion in the judgment of the manner and means of carrying out Contractor's activities and responsibilities hereunder provided, further that administrative procedures applicable to services rendered under this Agreement will be those of Contractor, which policies of Contractor will not conflict with City, State, or United States policies, rules, or regulations relating to the use of Contractor's funds provided for herein. The contractor agrees that it is a separate and independent enterprise from the City, that it had full opportunity to find other business, that it has made its own investment in it business, and that it will utilize a high level of skill necessary to perform the work. This Agreement must not be construed as creating any joint employment relationship between the Contractor and the City and the City will not be liable for any obligation incurred by Contractor, including but not limited to unpaid minimum wages and/or overtime premiums.

18. Audit Rights. The City reserves the right to audit the records of the Contractor for the commodities and/or serves provided under the contract at any time during the performance and term of the contract and for a period of five (5) years after completion and acceptance by the City. If required by the City, the Contractor agrees to submit to an audit by an independent certified public accountant selected by the City. The Contractor must allow the City to inspect, examine and review the records of the Contractor in relation to this Agreement at any an all times during normal business hours during the term of the Agreement.

19. Exhibits. The following Exhibits shall be attached, incorporated, and made a part of this Agreement:
    a. Standard Contract Addendum (Exhibit "A")
    b. Request for Bid/Proposal (Exhibit "B")
    c. Vendor Bid/Proposal (Exhibit "C")

d. Conditional Federal/Grant-Funded Contract Addendum (Exhibit "D")

20. Notices. All notices sent pursuant to this Agreement shall be given in writing via certified mail or overnight courier and shall be delivered to the following addresses:

As to Contractor:
Dive-Tech International, Inc.
PO Box 3177
Pinellas Park, FL 33780

As to City:
City Manager
City of St. Pete Beach
155 Corey Avenue
St. Pete Beach, FL 33706

With Copy To:
dive-tech@att.net

With Copy To:
attorney@stpetebeach.org

21. Conflicts and Severability. To the extent that any terms in the attached proposal conflict with the terms of this Agreement, the terms of this Agreement shall control and supersede such conflicting terms in the attached proposal, to the extent of such conflict. If any section, part of section, paragraph, clause, phrase, or word of this Agreement is declared invalid, the remaining provisions of this Agreement shall not be affected.

22. Amendments. This document and exhibits embody the entire Agreement of the parties. There are no promises, terms, conditions, or representations binding on either party hereto, other than those contained herein; and this document shall supersede all previous communications, representations, and/or agreements between the parties hereto, whether written or oral. This Agreement shall not be modified by any oral statement, communication, Agreement, course of conduct, or by anything other than a writing signed by the parties. This Agreement may be amended or modified only in writing signed by all parties hereto.

23. Jurisdiction, Venue, Attorney Fees. This Agreement shall be governed and construed according to the laws of Florida, and venue for any action arising herefrom shall be in Pinellas County, Florida. The prevailing party in any action to enforce or interpret this Agreement shall be entitled to reasonable attorney's fees incurred through all appellate proceedings.

24. Assignment. This Agreement shall be binding upon the parties, their successors, assigns, and legal representatives. Contractor shall not assign or otherwise transfer any of the rights or duties under this Agreement, without the express written consent of the City.

25. Counterparts. This Agreement may be executed and delivered in any number of counterparts, each of which so executed and delivered shall be deemed to be an original and all of which shall constitute one and the same instrument. Facsimile, documents executed, scanned and transmitted electronically and electronic signatures shall be deemed original signatures for purposes of this Agreement and all matters related thereto, with such facsimile, scanned and electronic signatures having the same legal effect as original signatures.

26. Authority. Contractor hereby acknowledges that the person executing this Agreement on behalf of Contractor has the full authority to do so and to bind Contractor to the terms hereof.

IN WITNESS WHEREOF, the Parties have executed this Agreement on the day and year set forth below.

Under penalties of perjury, and pursuant to Sec. 92.525, Fla. Stat., Contractor declares that Contractor has read the Section 15 of the Standard Contract Addendum, Exhibit "A", and that the facts stated in it are true.

Dive-Tech International, Inc.:

Signature: _____

By: James Paul Overby

Its: Vice-President

Date: 6-1-26

City of St. Pete Beach:

Signature: _____

By: Frances Robustelli

Its: City Manager

Date: _____

APPROVED AS TO FORM
AND LEGAL SUFFICIENCY:

_____
Ralf Brookes
City Attorney

ATTEST:

_____
Renee Rose
City Clerk

EXHIBIT "A"

Standard Contract Addendum

(Place Standard Form Addendum behind this page)

CITY OF ST. PETE BEACH, FLORIDA
STANDARD CONTRACT ADDENDUM

THIS STANDARD CONTRACT ADDENDUM is made and entered into this _____ day of _____, 2026, by and between the CITY OF ST. PETE BEACH, a Florida municipality, hereinafter referred to as the "City", and _____, hereinafter referred to as "Contractor", concerning that certain agreement dated the ____ day of _____, 2026 ("Agreement") and titled _____.

WITNESSETH:

WHEREAS, Section 119.0701, Fla. Stat., requires that certain public agency contracts must include certain statutorily required provisions concerning the contractor's compliance for Florida's Public Records Act; and

WHEREAS, Section 768.28, Fla. Stat., sets forth certain mandatory limitations on indemnification and liability for Florida public agencies; and

WHEREAS, Florida law requires that public agency contracts be subject to non-appropriation and thereby contingent upon appropriation during the public agency's statutorily mandated annual budget approval process; and

WHEREAS, Section 448.095, Fla. Stat., imposes certain obligations on public agencies with regard to the use of the E-Verify system by their contractors and subcontractors; and

WHEREAS, Section 287.133 and 287.135, Fla. Stat., provides restrictions on local governments contracting with companies that are on certain Scrutinized Companies lists or convicted vendor list; and

WHEREAS, additional terms required by Sections 282.3185(5) and (6) Fla. Stat. related to data management and Section 287.05701 Fla. Stat. related to social government and corporate activism are also added by virtue of this Addendum; and

WHEREAS, Section 286.101, Florida Statutes contains a list of "foreign countries of concern" including, the People's Republic of China, the Russian Federation, the Islamic Republic of Iran, the Democratic People's Republic of Korea, the Republic of Cuba, the Venezuelan regime of Nicolás Maduro, or the Syrian Arab Republic, including any agency of or any other entity under significant control of such "foreign country of concern". Any entity that does business with a state agency or political subdivision must disclose certain of their dealings with those "foreign countries of concern" to the Florida Department of Financial Services; and

WHEREAS, Section 787.06(13), Fla. Stat. provides that when a contract is executed, renewed, or extended between a nongovernmental entity and a governmental entity, the nongovernmental entity must provide the governmental entity with an affidavit signed by an

officer or a representative of the nongovernmental entity under penalty of perjury attesting that the nongovernmental entity does not use coercion for labor or services as defined in such statute;

NOW, THEREFORE, in consideration of the covenants set forth herein, the parties agree to this addendum as follows:

1. Amendment. This Addendum hereby amends and supplements the terms of the Agreement. In the event of a conflict between the terms of the Agreement and terms of the Addendum, the terms of the Addendum shall prevail.

2. Public Records Compliance. Contractor agrees that, to the extent that it may "act on behalf" of the City within the meaning of Section 119.0701(1)(a), Florida Statutes in providing its services under this Agreement, it shall:

(a) Keep and maintain public records required by the public agency to perform the service.

(b) Upon request from the public agency's custodian of public records, provide the public agency with a copy of the requested records or allow the records to be inspected or copied within a reasonable time at a cost that does not exceed the cost provided in this chapter or as otherwise provided by law.

(c) Ensure that public records that are exempt or confidential and exempt from public records disclosure requirements are not disclosed except as authorized by law for the duration of the contract term and following completion of the contract if the contractor does not transfer the records to the public agency.

(d) Upon completion of the contract, transfer, at no cost, to the public agency all public records in possession of the contractor or keep and maintain public records required by the public agency to perform the service. If the contractor transfers all public records to the public agency upon completion of the contract, the contractor shall destroy any duplicate public records that are exempt or confidential and exempt from public records disclosure requirements. If the contractor keeps and maintains public records upon completion of the contract, the contractor shall meet all applicable requirements for retaining public records. All records stored electronically must be provided to the public agency, upon request from the City's custodian of public records, in a format that is compatible with the information technology systems of the City.

(e) Pursuant to Section 119.0701(2)(a), Fla. Stat., **IF THE CONTRACTOR HAS QUESTIONS REGARDING THE APPLICATION OF CHAPTER 119, FLORIDA STATUTES, TO THE CONTRACTOR'S DUTY TO PROVIDE PUBLIC RECORDS RELATING TO THIS AGREEMENT, CONTACT THE CUSTODIAN OF PUBLIC RECORDS AT:**

Renee Rose
City Clerk/Public Records Custodian
cityclerk@stpetebeach.org

Phone: 727-363-9220
155 Corey Avenue
St. Pete Beach, FL 33706
Fax: 727-541-8040

3. Public Records Compliance Indemnification. Contractor agrees to indemnify and hold the City harmless against any and all claims, damage awards, and causes of action arising from the contractor's failure to comply with the public records disclosure requirements of Section 119.07(1), Florida Statutes, or by contractor's failure to maintain public records that are exempt or confidential and exempt from the public records disclosure requirements, including, but not limited to, any third party claims or awards for attorneys' fees and costs arising therefrom. Contractor authorizes the public agency to seek declaratory, injunctive, or other appropriate relief against Contractor in Pinellas County Circuit Court on an expedited basis to enforce the requirements of this section.

4. Compliance/Consistency with Section 768.28, Fla. Stat. Any indemnification or agreement to defend or hold harmless by City specified in the Agreement shall not be construed as a waiver of City's sovereign immunity, and shall be limited to such indemnification and liability limits consistent with the requirements of Section 768.28, Fla. Stat. and subject to the procedural requirements set forth therein. Any other purported indemnification by City in the Agreement in derogation hereof shall be void and of no force or effect.

5. Non-appropriation. City's performance and obligation to pay under this Agreement is contingent upon an appropriation during the City's annual budget approval process. If funds are not appropriated for a fiscal year, then the Contractor shall be notified as soon as is practical by memorandum from the City Manager or designee that funds have not been appropriated for continuation of the Agreement, and the Agreement shall expire at the end of the fiscal year for which funding has been appropriated. The termination of the Agreement at fiscal year end shall be without penalty or expense to the City subject to the City paying all invoices for services rendered during the period the Agreement was funded by appropriations.

6. E-Verify Compliance. By entering into this Agreement, the Contractor is obligated to comply with the provisions of Section 448.095, Fla. Stat. "Employment Eligibility," as amended from time to time. This includes but is not limited to register with and use the E-Verify System to verify the work authorization status of all newly hired employees, and requiring all subcontractors to provide an affidavit to Contractor attesting that the subcontractor does not employ, contract with, or subcontract with, an unauthorized alien. Contractor agrees to maintain a copy of such affidavit for the duration of this Agreement. Failure to comply with this paragraph will result in the termination of this Agreement as provided in Section 448.095, Fla. Stat., as amended and Contractor will not be awarded a public contract for at least one (1) year after the date on which the Agreement was terminated. Contractor will also be liable for any additional costs to the City as a result of the termination of this Agreement in accordance with this paragraph. Contractor affirmatively states, under penalty of perjury, that in accordance with Section 448.095, Fla. Stat., Contractor is registered with and uses the E-Verify system to verify the work authorization status of all newly hired employees, that in accordance with such statute, Contractor requires from each of its subcontractors an affidavit stating that the subcontractor does not employ, contract with, or

subcontract with an unauthorized alien, and that Contractor is otherwise in compliance with Sections 448.09 and 448.095, Fla. Stat.

7. Compliance/Consistency with Scrutinized Companies Provisions of Florida Statutes. Section 287.135(2)(a), Fla. Stat., prohibits a company from bidding on, submitting a proposal for, or entering into or renewing a contract for goods or services of any amount if, at the time of contracting or renewal, the company is on the Scrutinized Companies that Boycott Israel List, created pursuant to Section 215.4725, Fla. Stat., or is engaged in a boycott of Israel. Section 287.135(2)(b), Fla. Stat., further prohibits a company from bidding on, submitting a proposal for, or entering into or renewing a contract for goods or services over one million dollars ($1,000,000) if, at the time of contracting or renewal, the company is on either the Scrutinized Companies with Activities in Sudan List or the Scrutinized Companies with Activities in the Iran Petroleum Energy Sector List, both created pursuant to section 215.473, Fla. Stat., or the company is engaged in business operations in Cuba or Syria. Contractor hereby certifies that Contractor is not listed on any of the following: (i) the Scrutinized Companies that Boycott Israel List, (ii) Scrutinized Companies with Activities in Sudan List, or (iii) the Scrutinized Companies with Activities in the Iran Petroleum Energy Sector List. Contractor further hereby certifies that Contractor is not engaged in a boycott of Israel or engaged in business operations in Cuba or Syria. Contractor understands that pursuant to section 287.135, Fla. Stat., the submission of a false certification may subject Contractor to civil penalties, attorney's fees, and/or costs. Contractor further understands that any contract with City for goods or services of any amount may be terminated at the option of City if Contractor (i) is found to have submitted a false certification, (ii) has been placed on the Scrutinized Companies that Boycott Israel List, or (iii) is engaged in a boycott of Israel. And, in addition to the foregoing, if the amount of the contract is one million dollars ($1,000,000) or more, the contract may be terminated at the option of City if the company is found to have submitted a false certification, has been placed on the Scrutinized Companies with Activities in Sudan List or the Scrutinized Companies with Activities in the Iran Petroleum Energy Sector List, or has been engaged in business operations in Cuba or Syria.

8. Disclosure Requirements for "Foreign Countries of Concern". CONTRACTOR shall comply with the disclosure requirements set forth is Section 286.101 (3) (a), Fla. Stat., which requires "Any entity that applies to a state agency or political subdivision for a grant or proposes having a contract value of $100,000 or more shall disclose to the state agency or political subdivision any current or prior interest of, any contract with, or any grant or gift received from a "foreign country of concern" if such interest, contract, grant or gift received from a "foreign country of concern" if such interest, contract, grant or gift has a value of $50,000 or more and such interest existed at any time or such contract, grant or gift was received or in force at any time during the previous five (5) years. Such disclosure shall contain the name and mailing address of the disclosing entity, the amount of the gift or the value of the interest disclosed, the applicable "foreign country of concern" and, if applicable the date of termination of the contract or interest, the date of receipt of the grant or gift and the name of the agent or controlled entity that is the source or interest holder. Within one (1) year before applying for any grant or proposing any contract, such entity must provide a copy of such disclosure to the Department of Financial Services". Pursuant to Section 286.101(7), Fla. Stat.: "In addition to any fine assessed under [section 286.101(7)(a), F.S.], a final order determining a third or subsequent violation by an entity other than a state agency or political subdivision shall automatically disqualify the entity from

eligibility for any grant or contract funded by a state agency or any political subdivision until such ineligibility is lifted by the Administration Commission for good cause."

9. Venue and Jurisdiction. Notwithstanding any of other provision to the contrary, this Agreement and the parties' actions under this Agreement shall be governed by and construed under the laws of the State of Florida, without reference to conflict of law principles. As a material condition of this Agreement, each Party hereby irrevocably and unconditionally: i) consents to submit and does submit to the jurisdiction of the Circuit Court in and for Pinellas County, Florida for any actions, suits or proceedings arising out of or relating to this Agreement. Both parties waive any right to file an action, suit or proceeding in Federal Court or remove any action, suit or proceeding to Federal Court.

10. Attorneys' Fees and Costs. Notwithstanding any of other provision to the contrary, if litigation ensues regarding this Agreement, each party hereto shall bear its own attorneys' fee and costs.

11. Public Entities Crime or Convicted Vendor List. Contractor agrees and assumes a continuous duty to disclose to the City if the Contractor or any of its affiliates as defined by Section 287.133(1)(a), Florida Statutes are placed on the Convicted Vendor List or the Antitrust Violator Vendor List maintained by the Florida Department of Management Services.

12. Data Management; Notice of Breach. Contractor shall cooperate with the City and provide timely incident reporting, response activities/fact gathering, public and agency notification, severity level assessment, after-action reports, etc., which the City must report in accordance with Sections 282.3185(5) & (6), Florida Statutes in the event of a data breach.

13. Environmental and Social Government and Corporate Activism. The City has not given preference or requested documentation from the Contractor based on Contractor's social, political or ideological interest. Contractor agrees to similarly not request documentation or give preference to any subcontractor based on the subcontractor's social, political or ideological interests.

14. Taxes. The City shall not be liable for any taxes and assessments imposed by a federal, state or local governmental agency to the extent that the City is exempt from same by Florida law, including but not limited to any sales or use tax.

15. No coercion for labor or services. The Contractor swears under penalty of perjury that the Contractor does not use coercion for labor or services as defined as follows:

"Coercion" means:

1. Using or threatening to use physical force against any person;
2. Restraining, isolating, or confining or threatening to restrain, isolate, or confine any person without lawful authority and against her or his will;
3. Using lending or other credit methods to establish a debt by any person when labor or services are pledged as a security for the debt, if the value of the labor or services as reasonably assessed is not applied toward the liquidation of the debt, the length and nature of the labor or services are not respectively limited and defined;

4. Destroying, concealing, removing, confiscating, withholding, or possessing any actual or purported passport, visa, or other immigration document, or any other actual or purported government identification document, of any person;

5. Causing or threatening to cause financial harm to any person;

6. Enticing or luring any person by fraud or deceit; or

7. Providing a controlled substance as outlined in Schedule I or Schedule II of Sec. 893.03, Fla. Stat. to any person for the purpose of exploitation of that person.

16. Force Majeure. The City reserves the right to suspend, modify or terminate this contract in the event of an act of god or act of man beyond the control of the parties, including but not limited to a hurricane, tropical storm, tornado, or other destructive weather event, flooding, pandemic, plague, war, armed conflict, domestic or foreign terrorism, riot, labor condition, state or federal governmental action, and catastrophic Internet disturbance, making performance inadvisable, economically impracticable, illegal, or impossible.

17. Additional Terms. Notwithstanding any of other provision to the contrary, the parties agree as follows:

A. None.

IN WITNESS WHEREOF, the parties hereto have executed and delivered this instrument on the days and year indicated below and the signatories below to bind the parties set forth herein.

Under penalties of perjury, and pursuant to Sec. 92.525, Fla. Stat., Contractor declares that Contractor has read the foregoing Section 15 above and that the facts stated in it are true.

Contractor:

_____

Print Name: James Paul Overby

Title: Vice-President

Company: Dive-Tech International, Inc.

ATTEST:

_____

Renee Rose, City Clerk

City of St. Pete Beach:

_____

Frances Robustelli, City Manager

EXHIBIT "B"

Request for Bid/Proposal

(Place Request for Bid/Proposal behind this page)

155 Corey Avenue
St. Pete Beach, FL 33706-1839
www.stpetebeach.org

ADDENDUM 2

Commercial Diving Services

Issued 3/27/2026

*Sealed bids must be received by **9:00 AM on 04/08/2026** electronically via Bonfire. Bids received after the deadline will not be accepted. They will be publicly opened and read at **9:30 AM on 04/08/2026**. All bidders are invited to attend this bid Opening.*

Addendum 2 includes:

Questions and Answers

Questions and Answers:

1. Can you advise company licensing requirements - specifically that a Licensed Specialty Marine Contractor registered through the Florida DBPR is required for Award of this contract? Not required.

2. ADCI Consensus Standards Edition 6.5 for commercial dive operations is the safe standard adopted by the USCG and many agencies for underwater work. Will this standard be enforced for the services outlined in this solicitation? All diving operations shall comply with OSHA Commercial Diving Operations (29 CFR 1910 Subpart T). Diving operations shall also conform to ADCI Consensus Standards (latest edition) or an equivalent nationally recognized commercial diving standard, such as USACE EM 385-1-1, where applicable.



155 Corey Avenue
St. Pete Beach, FL 33706-1839
www.stpetebeach.org

ADDENDUM 1

Commercial Diving Services

Issued 3/23/2026

*Sealed bids must be received by **9:00 AM on 04/08/2026** electronically via Bonfire. Bids received after the deadline will not be accepted. They will be publicly opened and read at **9:30 AM on 04/08/2026**. All bidders are invited to attend this bid Opening.*

Addendum 1 includes:

Pre-bid Minutes
Questions and Answers

Optional - Pre-Bid Meeting Minutes
RFB: Commercial Diving Services
March 18, 2026
9:30 AM

Staff Members Present:
Sara Spain, Procurement Manager
John Taylor, Assistant Finance Director
Camden Mills, Public Services Director
Brian Peckins, Assistant Public Services Director
Dejan Milosevic, Project Manager
Michael Weaver, Infrastructure Operations Manager
Brian Gelock, Public Services
Kenneth Kosbab, Public Services
Ariana Wilson-Romo, Exec. Assistant City Clerk's Office

Others Present:

Name	***Company***	***Contact***
Helize Vivier	Triton Commercial Diving LLC	Helize.vivier@tcddive.com
Nathan Balkit	AC Plus Marine	projects@acplusmarine.com
Troy Caras	Isla Maritime	tcaras@islamaritime.com
Kyle Adkins	Ballard Marine Construction	Kyle.adkins@ballardmc.com
Imre Budinszki	Dive Tech International	Dive-tech@att.net
Levi Osborn	Ballard Marine Construction	Levi.osborn@ballardmc.com
Alan Christian	EnviroScience Inc.	achristian@enviroscienceinc.com
Zach Rogers	In Depth Inc.	zach@indepthservicesinc.com
Aileen Caras	Isla Maritime	acaras@islamaritime.com
Paul Overby	Dive Tech International	jpoverby@dive-tech.com
Eric Shelley	Isla Maritime	eshelley@islamaritime.com
Miles Upcavage	Did not provide	Did not provide

The meeting was called to order at 9:33 AM.

All attendees were present via Teams.

Ms. Spain briefly reviewed important dates and times which are as follows:

- Receipt of questions due 3/25 at 10AM
- Bids due 4/8 by 9AM
- Bid opening 4/8 at 9:30AM

She requested that any questions be submitted in writing to purchasing@stpetebeach.org. Questions will be answered via an addendum that will be posted to the City website and Bonfire.

Public Services Director Camden Mills summarized that this project will be for a maintenance contract managed by the City's operations team, with a goal to have on-call service for commercial diving.

There being no questions, the meeting was adjourned at 9:38 AM.

Questions and Answers:

1. Does this project require that the bidder hold a FL State General Contractor License? NO

2. Please provide the direct link for bid submission.
https://stpetebeach.bonfirehub.com/portal/?tab=openOpportunities

3. Can you please provide exact locations of the areas where the scheduled work is to be completed. Please see attached maps.

4. Can you please provide engineered drawings and associated structures where the dive team will work on the grates, valves, pipelines, etc… Please see link below.

5. Can the City clarify whether a Florida Certified or Registered Contractor's License is required for this contract, specifically for repair or replacement of tidal check valves, or if this work is considered maintenance under this RFB? Not required. Work is considered maintenance.

6. Can the City confirm that hydraulic dredging under this contract is limited to maintenance removal of sediment and does not include excavation or alteration of original design grade requiring contractor licensure? Yes, dredging under this contract is limited to maintenance removal of sediment.

7. Can the City provide clarification on how many locations require access by boat or barge versus land-based access, and whether work will typically be grouped to minimize mobilizations? Please see maps linked below; Majority of locations are accessible by land. Work will be grouped to minimize mobilizations.

8. Can the City confirm whether remotely operated vehicles (ROV) or sonar-based inspection methods may be utilized as a supplement to diver inspections, where appropriate, to enhance safety, efficiency, and documentation quality? Yes, that's acceptable.

9. Can the City provide a detailed asset list or map identifying the locations, approximate depths, pipe diameters, and typical conditions of the tide check valves, manatee grates, and outfalls included in this contract? Additionally, are any prior inspection reports or videos available for reference? See attached.

Check Valve Asbuilts.zip

TCV Maint - Bid Specs.xlsx

ST. PETE BEACH

KEY SHEET

Legend

Page Number

St. Pete Beach
The Sunset Capital of Florida

N

0 1,000 2,000 3,000 4,000 Feet

1 2 3 4 5 6 7 8 9 10 11 12 13 14 15 16 17 18 19 20 21

Kimley»Horn

ST. PETE BEACH STORM SYSTEM

Service Area 5 - Page 1

APRIL 2023

- Clean Out
- Control Valve
- Discharge Point
- Fitting
- Inlet
- Manhole
- Pump Station
- Gravity Main
- Abandoned Pipe

St. Pete Beach
The Sunset Capital of Florida

N

0 55 110 220 330 440
Feet

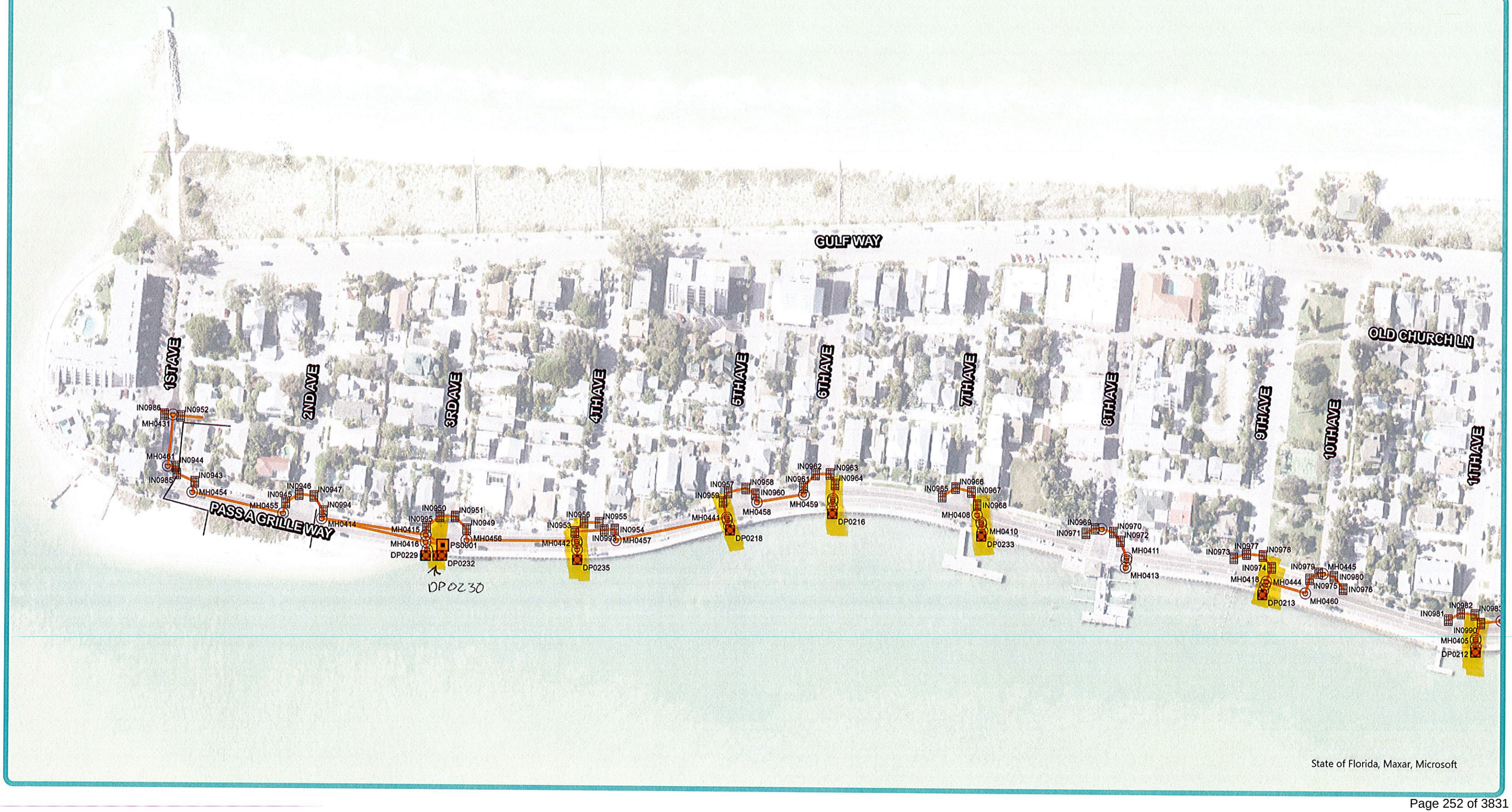

ST. PETE BEACH STORM SYSTEM

Service Area 4 - Page 2

APRIL 2023

- Clean Out
- Control Valve
- Discharge Point
- Fitting
- Inlet
- Manhole
- Pump Station
- Gravity Main
- Abandoned Pipe

St. Pete Beach
The Sunset Capital of Florida

N

0 55 110 220 330 440
Feet



ST. PETE BEACH STORM SYSTEM

Service Area 6 - Page 3

APRIL 2023

- Clean Out
- Control Valve
- Discharge Point
- Fitting
- Inlet
- Manhole
- Pump Station
- Gravity Main
- Abandoned Pipe

St. Pete Beach
The Sunset Capital of Florida

N

0 110 220 440 660 880
Feet



ST. PETE BEACH STORM SYSTEM

Service Area 3 - Page 4

APRIL 2023

- Clean Out
- Control Valve
- Discharge Point
- Fitting
- Inlet
- Manhole
- Pump Station
- Gravity Main
- Abandoned Pipe

St. Pete Beach
The Sunset Capital of Florida

N

0 55 110 220 330 440
Feet

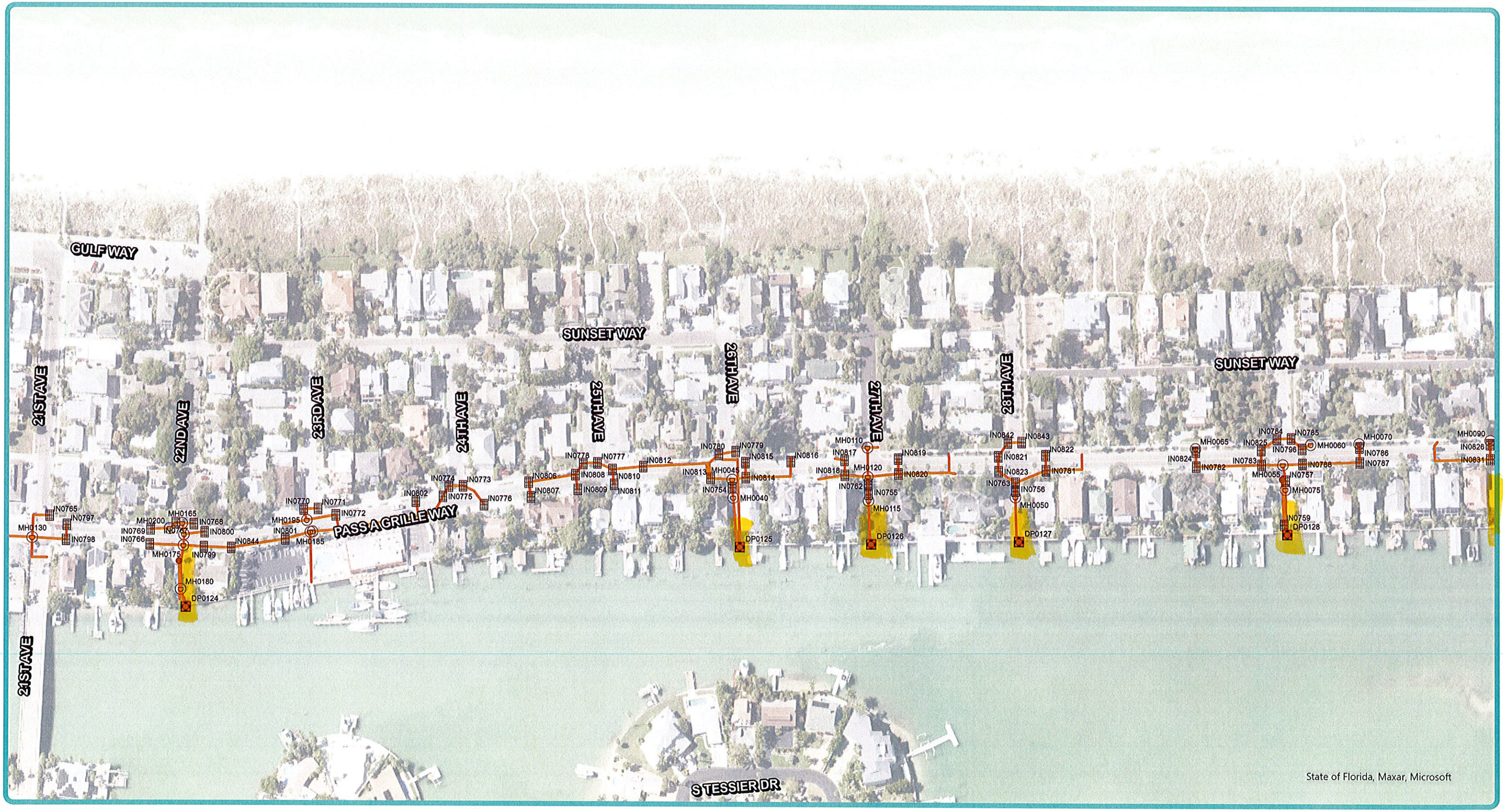

ST. PETE BEACH STORM SYSTEM

Service Area 3 - Page 5

APRIL 2023

- Clean Out
- Control Valve
- Discharge Point
- Fitting
- Inlet
- Manhole
- Pump Station
- Gravity Main
- Abandoned Pipe

St. Pete Beach
The Sunset Capital of Florida

N

0 110 220 440 660 880
Feet



ST. PETE BEACH STORM SYSTEM

Service Area 17 - Page 6

APRIL 2023

- Clean Out
- Control Valve
- Discharge Point
- Fitting
- Inlet
- Manhole
- Pump Station
- Gravity Main
- Abandoned Pipe

St. Pete Beach
The Sunset Capital of Florida

N

0 137.5275 550 825 1,100
Feet



ST. PETE BEACH STORM SYSTEM

Service Area 8 - Page 7

APRIL 2023

- Clean Out
- Control Valve
- Discharge Point
- Fitting
- Inlet
- Manhole
- Pump Station
- Gravity Main
- Abandoned Pipe

St. Pete Beach
The Sunset Capital of Florida

N

0 80 160 320 480 640
Feet



ST. PETE BEACH STORM SYSTEM

Service Area 7 - Page 8

APRIL 2023

- Clean Out
- Control Valve
- Discharge Point
- Fitting
- Inlet
- Manhole
- Pump Station
- Gravity Main
- Abandoned Pipe

St. Pete Beach
The Sunset Capital of Florida

N

0 110 220 440 660 880
Feet

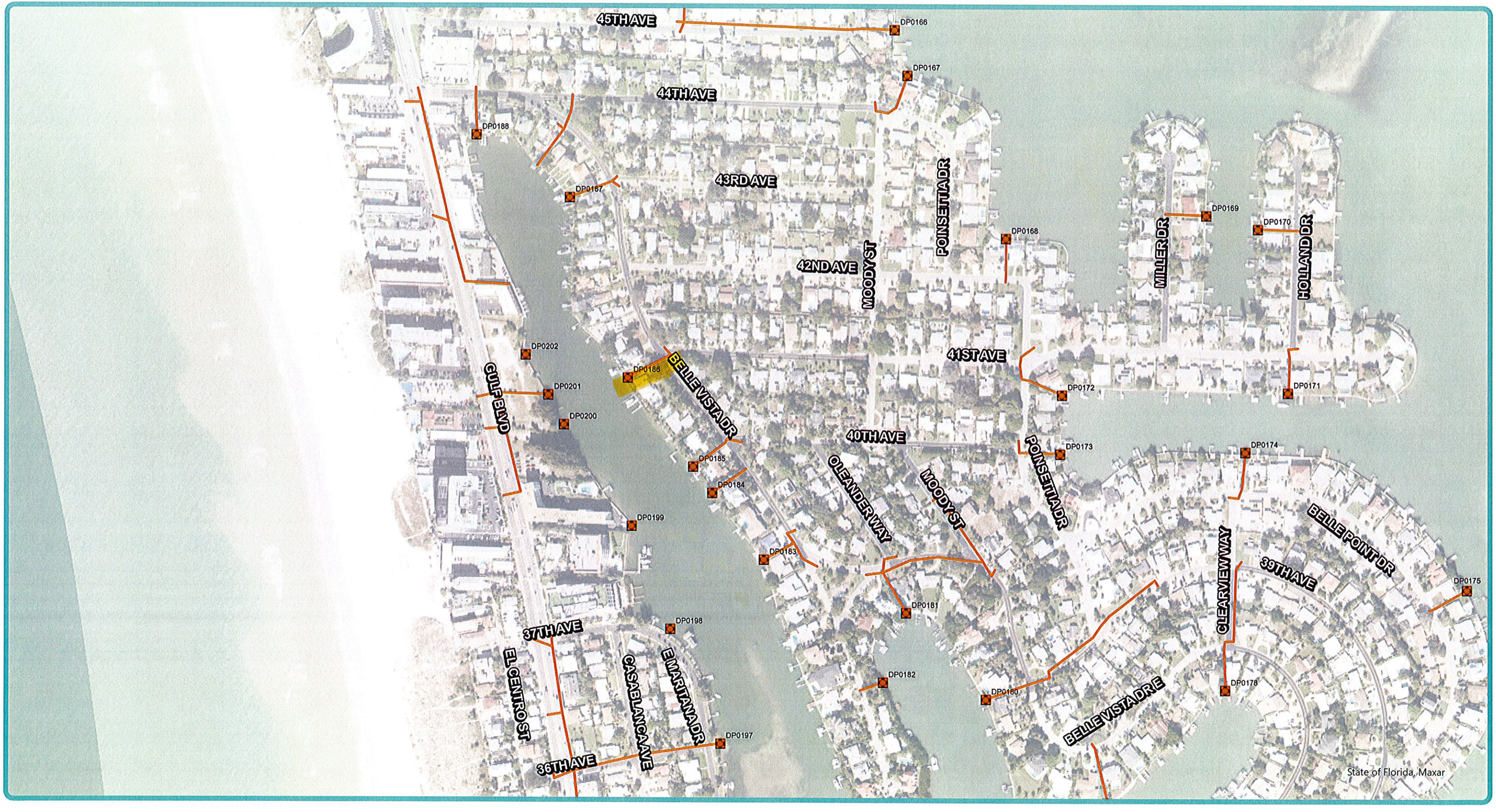

ST. PETE BEACH STORM SYSTEM

Service Area 16 - Page 9

APRIL 2023

- Clean Out
- Control Valve
- Discharge Point
- Fitting
- Inlet
- Manhole
- Pump Station
- Gravity Main
- Abandoned Pipe

St. Pete Beach
The Sunset Capital of Florida

N

0 80 160 320 480 640
Feet



ST. PETE BEACH STORM SYSTEM

Service Area 9 - Page 10

APRIL 2023

- Clean Out
- Control Valve
- Discharge Point
- Fitting
- Inlet
- Manhole
- Pump Station
- Gravity Main
- Abandoned Pipe

St. Pete Beach
The Sunset Capital of Florida

N

0 55 110 220 330 440
Feet



ST. PETE BEACH STORM SYSTEM

Service Area 2 - Page 11

APRIL 2023

- Clean Out
- Control Valve
- Discharge Point
- Fitting
- Inlet
- Manhole
- Pump Station
- Gravity Main
- Abandoned Pipe

St. Pete Beach
The Sunset Capital of Florida

N

0 80 160 320 480 640
Feet

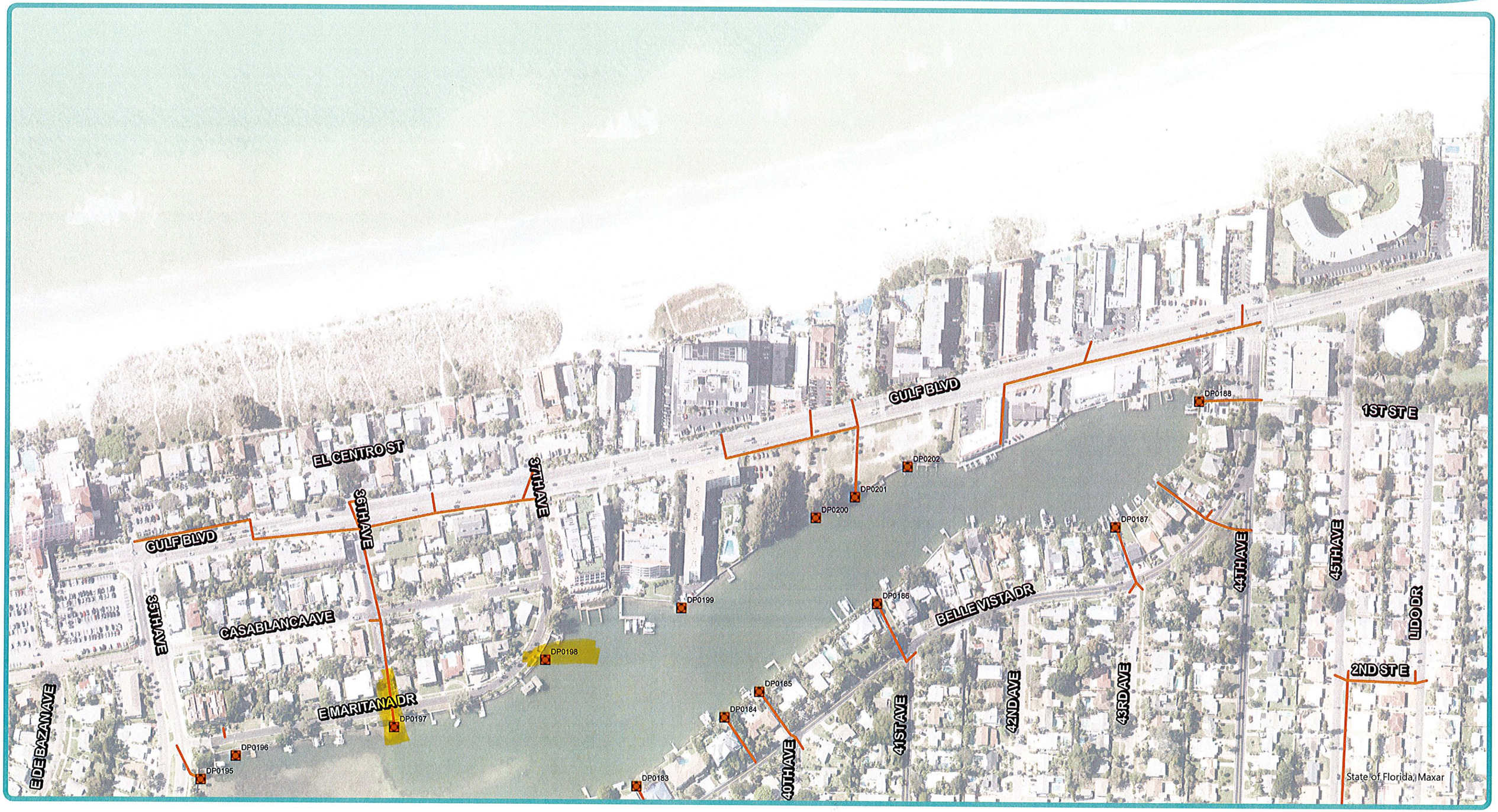

ST. PETE BEACH STORM SYSTEM

Service Area 14 - Page 17

APRIL 2023

Clean Out
Control Valve
Discharge Point
Fitting
Inlet
Manhole
Pump Station
Gravity Main
Abandoned Pipe

St. Pete Beach
The Sunset Capital of Florida

N

0 137.5275 550 825 1,100 Feet





City of St Pete Beach
Request for Bid

Commercial Diving Services

Bids due on or before
04/08/2026 at 9:00 AM
EST(Deadline) Electronically Via Bonfire Only

Table of Contents

I. CONTRACTOR'S BID SUBMITTAL 3
II. BID FORM 4
III. GENERAL CONTRACT TERMS 5
IV. REFERENCES & MINIMUM QUALIFICATIONS 25
V. PUBLIC ENTITY CRIMINAL AFFIDAVIT 26
VI. NON-COLLUSION AFFADAVIT 28
VII. SPECIFICATIONS 29

Event	Date	Time
Publication of Bid	03/11/2026	8:00 AM
Pre-Bid Meeting	03/18/2026	9:30 AM
Deadline for Question Submission	03/25/2026	10:00 AM
Bid Receiving Deadline	04/08/2026	9:00 AM
Bid Opening	04/08/2026	9:30 AM

I. CONTRACTOR'S BID SUBMITTAL

The company that is submitting a bid declares that it has extensive experience in **Commercial Diving Services.**

The undersigned, as Bidder, hereby declares that the only person or persons interested in the Bid as principal or principals are named herein, and that no person other than herein mentioned has any interest in the Bid or in the Agreement to be entered into; that this Bid or Agreement is made without connection with any other person, company, or parties making a Bid; and that it is in all respects fair and in good faith without collusion or fraud.

The Bidder further declares that they have examined the site of the work and informed themselves fully in regard to all conditions pertaining to the place where the work is to be done; that they have examined the Plans and Specifications for the work and Contract Documents relative thereto, and have read all special provisions furnished prior to the opening of bids; and that they have satisfied themselves relative to the materials to be supplied and work to be performed.

The Bidder proposes and agrees, if the Bid is accepted, to contract with the City of St. Pete Beach, Florida, in the form of an Agreement specified for **"Commercial Diving Services"** in St. Pete Beach, Florida, in full and complete accordance with the shown, noted, described, and reasonably intended requirements of the Plans, Specifications, and Contract Documents, to the full and entire satisfaction of the City of St. Pete Beach, Florida.

The successful bidder shall be required to utilize the template Agreement in this Request for Bids (RFB) and any questions regarding the Agreement must be addressed during the RFB process before submittal. The City reserves the right to respond or not respond to questions in the form of an addendum.

The Bidder proposes to furnish all materials, equipment, labor, and perform the work submitted in their bid schedule for the City of St. Pete Beach **" Commercial Diving Services".**

COMPANY: _____ DATE: _____

ADDRESS: _____ PHONE: _____

BIDDER: _____ NAME: _____
(SIGNATURE) *(PRINT NAME & TITLE)*

STATE OF FLORIDA
COUNTY OF _____

The foregoing instrument was sworn to (or affirmed), subscribed, and acknowledged before me **by means of ☐ physical presence or ☐ online notarization**, this _____ day of _____, 2026, by _____, who is personally known to me or has produced _____ as identification.

(SEAL)

_____
Notary Public – State of Florida

_____
(Print, Type, Stamp, or Commissioned Name of Notary Public)

SUBMIT BID TO:

Electronically via Bonfire Only

II. Bid Form

Pay Item	Description	Quantity	Unit	Unit Cost	Total Cost
Diver Team Labor					
	Three (3) Man Dive Team, Scheduled	40	Hour		$ -
	Three (3) Man Dive Team, Overtime	20	Hour		$ -
	Three (3) Man Dive Team, Unscheduled	40	Hour		$ -
	Additional Diver	8	Hour		$ -
	Additional Diver, Overtime	8	Hour		$ -
	Additional Diver, Unscheduled	8	Hour		$ -
	Written & Photo/Video Reports or Specialized Paperwork	10	Hour		$ -
	Emergency Call-Out Fee	1	Each		$ -
				Subtotal	**$ -**
Mobilization Rate, Per Occurrence					
	Mobilization Fee	5	Each		$ -
	Demobilization Fee	5	Each		$ -
				Subtotal	**$ -**
Equipment					
	Work Boat / Barge	20	Day		$ -
	Hydraulic Unit	20	Day		$ -
	4-inch Hydraulic Submersible Pump	20	Day		$ -
	Jet Pump	20	Day		$ -
	4,000 PSI Water Blaster	20	Day		$ -
	Digital Underwater Camera	20	Day		$ -
	Underwater Video with Digital Capture	20	Day		$ -
	Fuel Charge	20	Day		$ -
	Small Pneumatic Tool	20	Day		$ -
	Shallow Water Dive Package	20	Day		$ -
	Additional Equipment (Cost plus 15%)	1	LS		
				Subtotal	**$ -**
Materials					
	Additional Materials (Cost plus 15%)	1	LS		
				TOTAL	$ -

** Scheduled labor is six (6) hour minimum onsite. Overtime is after eight (8) hours including nights, weekends, and holidays.*

III. GENERAL CONTRACT TERMS

REQUEST FOR BID

The City of St. Pete Beach is submitting this RFB for bids on the Commercial Diving Services.

LOCATIONS

The City of St. Pete Beach is soliciting bids from qualified Commercial Diving Services for the City.

BID SUBMITTALS

Bid documents must include a signed/notarized Contractor's Bid Submittal, Bid Form, References, Contractor's license and insurance certificates, and Public Entity Criminal Affidavit. The Contractor shall submit one electronic bid via Bonfire.

BIDDER INFORMATION

The City is not responsible for any Addendums or other supplementary information that is not received due to non-submittal of the aforementioned information. Please refer back to the city website (http:// www.stpetebeach.org/news-and-links/city-projects.html) for additional project information as it becomes available. The City reserves the right to decide whether to answer addendums or not. The City is not required to provide any additional information.

PRE-BID MEETING

An optional pre-bid meeting will be held on **03/18/2026 at 9:30 AM EST** via Microsoft Teams Video conference/Teleconference. Please contact the City's Procurement Manager (purchasing@stpetebeach.org) for a meeting invitation and Microsoft Teams Meeting instructions.

WRITTEN REQUESTS FOR INTERPRETATIONS/CLARIFICATIONS

No oral interpretations will be made to any firms as to the meaning of the scope of work or any other contract documents included in this **RFB.** All questions pertaining to the terms and conditions or scope of work of this Request for Bid **(RFB)** must be sent in writing only via email to the City Procurement Manager (purchasing@stpetebeach.org) and shall be received no later than **10:00 EST on 03/25/2026**. Responses to questions may be handled as an Addendum if the response would provide clarification to the requirements of the **RFB**. All such Addenda shall become a part of the contract documents. The City will not be responsible for any other explanation or interpretation of the proposed **RFB** made or given prior to the award of the contract. The City will not respond to questions received after the specified deadline. The City reserves the right to respond to any and all questions but is not required to do so.

BID PACKAGES

Sealed bids will be accepted by the City until **04/08/2026** at **9:00 AM** EST (Deadline). No bids shall be accepted by the City after this deadline – NO EXCEPTIONS. Bid Packages must be electronically submitted via Bonfire Clearly marked as: "**Commercial Dive Services**." If a link is needed for either site, please contact the Procurement Manager (purchasing@stpetebeach.org.) All Bidders are invited to attend this bid opening.

CONTACT INFORMATION

Sara Spain – Procurement Manager
Mailing Address - 155 Corey Avenue, St. Pete Beach, Florida 33706
E-mail - purchasing@stpetebeach.org

SCOPE OF WORK

The City of St. Pete Beach is seeking a qualified full service commercial diving Contractor with experience in a wide range of applications. The Contractor shall provide a qualified dive team, and all related diving equipment required to assist the City of St. Pete Beach with the cleaning, inspection, repair and maintenance of tide check valves, stormwater outfalls, manatee grates, subaqueous pipelines, piers, piles, and bulkheads.

The City of St. Pete Beach has 35 tide check valves, and 25 manatee grates installed at stormwater outfalls throughout the City. Services shall include:

- Debris Removal from Valve, Pipe, Endwalls, and Pit
- Marine Growth Removal from Valve, Pipe, Endwalls, and Pit
- Maintenance of Manatee Grates, when present
- Written and Video Reports of condition per cycle
- Repair and Replacement of in-line and outfall-end type Tidal Check Valves
- Hydraulic Dredging

Services must comply with relevant standards and regulations, including OSHA diving regulations and any applicable environmental guidelines.

CONTRACTOR TO FURNISH

- A Qualified Dive Team
- All Related Diving Equipment
- Underwater Video with Digital Capture
- Shallow Water Dive Package
- Small Pneumatic Tool
- Work Boat / Barge
- Hydraulic Unit
- 4-inch Hydraulic Submersible Pump
- Jet Pump
- 4000 PSI Water Blaster
- Digital Camera

THE CITY OF ST. PETE BEACH TO FURNISH

- A Representative to Coordinate Activities
- A Representative to View Video Real Time and Direct the Crew
- Access to Work Site
- Permits (If required)
- Assist with Lock-Out Tag-Out procedures (training or supervision as needed)
- Procurement of Tidal Check Valves (as needed)

SCHEDULE

Maintenance, cleaning and inspection shall be scheduled per occurrence and may include the full asset inventory or a portion of that inventory for each cycle. Maintenance cycles are to be performed quarterly, or more frequently as-needed, based on City requirements.

Tidal check valve, manatee grate, and other miscellaneous outfall repairs shall be scheduled per occurrence, as-needed.

The Contractor must provide at least 72 hours' notice for scheduling changes. Emergency response for unscheduled maintenance requests must be available within 24 hours.

PERFORMANCE METRICS

The following performance metrics will be used to evaluate the Contractor's work:

- Timeliness of completing tasks as per the agreed schedule.
- Accuracy and thoroughness of written condition reports.
- Compliance with safety standards and regulations.
- Responsiveness to unscheduled maintenance requests.

All reports must be submitted in a digital format (PDF or Word) within ten (10) days of completing each maintenance cycle. Reports should include:

- Detailed descriptions of completed tasks.
- Photographic and video evidence.
- Identified issues and recommendations for future maintenance.

PENALTIES

Failure to adhere to the schedule or meet performance standards may result in penalties, including:

- 5% reduction in payment for delayed work (per day).
- Rework at Contractor's expense for substandard services.

EMERGENCY SERVICES

The Contractor must provide emergency maintenance services within 24 hours of the City's request. The bid form includes an emergency call-out fee to account for this service.

Once a contract is awarded, the selected vendor will be required to submit a detailed fee schedule outlining the main pay items for the project. This fee schedule will be reviewed at the pre-construction meeting and will be used to review pay applications and evaluate project progress.

DETAILED SPECIFICATIONS

LOCATIONS

The locations will cover all tide check valves, stormwater outfalls, manatee grates, subaqueous pipelines, piers, piles, and bulkheads Citywide that are City owned throughout the City of St. Pete Beach Florida.

Standard work hours shall be from 7:30 AM until 6:00 PM, Monday through Saturday. No work shall take place on Sundays or on official City holidays without prior approval by the City Manager or designee at least 1 week prior to the scheduled work. A list of current official City holidays can be found on the City's Human Resources website at http://www.stpetebeach.org/hr/holidays.html. Contractor will coordinate scheduling of work with the City's Project Manager and City's Inspector.

ADDITIONAL WORK DETAILS

Contractors or persons wishing to bid on this project are licensed, bondable and insured in accordance to the City's requirements. The Contractor will furnish all necessary labor, materials, tools, equipment and supplies to complete the scope of work. Bid must also include all costs for licenses, permits, and any material disposal fees.

Bidders shall bring questions, discrepancies, omissions, conflicts or doubt as to meaning of any part of Contract Documents to the attention of the City of St Pete Beach Procurement Manager at least ten (10) business days before bid submittal deadline. Clarification of intent of Contract Documents, if necessary, shall be made available to bidders in the form of an Addendum. Failure to request clarification of interpretation of Contract Documents shall not relieve bidders of their responsibilities to perform the work.

The City of St. Pete Beach reserves the right to reject any or all bids or parts of bids, or accept any bid or part thereof deemed to be in the best interests to the City of St. Pete Beach.

STATEMENT OF WORK

The Contractor shall furnish and pay the cost, including sales tax and all other applicable taxes, licenses, permits and fees, of all the necessary materials not furnished by the City and shall furnish and pay for all the superintendence, labor, tools, equipment, transportation, and perform all the work required for the execution of all services listed in the Bidder's Proposal and Bid Form attached hereto and in strict accordance with the Plans, Specifications, and requirements of the City of St. Pete Beach which are attached hereto and made a part hereof, and any amendments thereto and such supplemental Plans and Specifications which may hereafter be approved.

BEGINNING DATE

The Contractor shall, within ten (10) business days after receipt of the Notice of Award and before commencement of any operations hereunder, execute the Agreement. Additionally, the Contractor shall, within twenty (20) business days after receipt of the Notice of Award, provide all required documentation to the City. The Contractor must commence construction activities within thirty (30) business days of NTP to prepare and procure materials. Any change to the start date or the work schedule included with this bid must be submitted in writing to and approved by the City Manager or designee.

COMPLETION OF WORK

The work will be completed on an as-needed basis. Each location that needs to be surveyed, repaired and/or worked on will constitute it's own "job". The contract will be for (3) three years from time of execution (Date of last signature) of the contract with (2) additional (1) one year extensions if agreed upon by the City and vendor. .

EXAMINATION OF SITE

Bidders may visit specific areas with advanced notice.

ASSURANCES

The responding Contractor shall provide a statement of assurance that the Contractor is not presently in violation of any statutes or regulatory rules that might have an impact on the firm's operations. All applicable laws and regulations of the State of Florida, and ordinances and regulations of the City of St. Pete Beach will apply.

TRAFFIC CONTROL AND STAGING AREA

Contractor shall include all costs associated with vehicular and pedestrian traffic control and maintenance during the project. Contractor shall be responsible for providing a staging area. The location of this area must be approved by the City Manager or designee. The Contractor will be required to control the area including any additional fencing or barricades and Contractor will be responsible for the restoration of this and all other staging areas provided by the City.

ASSIGNMENT AND TRANSFER OF CONTRACT

The Contractor shall not assign or transfer this Agreement or any part thereof or any interest therein without consent in writing of the City and the Contractor's Surety, and any such assignment or transfer without such written consent shall be null and void.

SUBCONTRACTS

The Contractor shall not subcontract this Agreement or any part thereof or any interest therein without consent in writing of the City and the Contractor's Surety. Any Subcontractor approved by the City will be subject to the same standards and qualifications as stated in this Contract.

PERFORMANCE PAYMENT BOND

Not required for this contract.

LIQUIDATED DAMAGES

If the work embraced by this Contract is not completed on or before the date set for completion or any extension thereof, the actual damages for the delay will be impossible to determine and in lieu thereof, the Contractor shall pay to the City fixed, agreed, and liquidated damages in the amount of either Five-Hundred Dollars ($500) per day for each calendar day of delay until the work is satisfactorily completed.

PAYMENT

Payment shall be made to the Contractor for work performed under this Contract for the quantities of work as determined in accordance with Payments for Work Completed and Payments Withheld of this Contract. Payment for extra work will be made in accordance with the Changes in Work, Contract Amount, and Contract Time sections below.

CHANGES IN THE WORK

Without invalidating the Contract, the City may, at any time or from time to time, order additions, deletions or revisions in the work authorized by written Change Orders or directives. Upon receipt of a Change Order, the Contractor will proceed with the work involved. All such work shall be executed under the applicable conditions of the Contract documents. If any Change Order causes an increase or decrease in the Contract Amount or any extension or shortening of the Contract Time, an equitable adjustment will be made.

Additional Work performed by the Contractor without authorization of a Change Order will not entitle them to an increase in the Contract Amount or any extension of the Contract Time, except in the case of an emergency (subject to approval by City Manager or designee).

It is the Contractor's responsibility to notify their Surety of any changes affecting the general scope of the Work or change of the Contract Amount and the amount of the applicable bonds shall be adjusted accordingly, and an amended bond document furnished to the City. In the event the City directs the Contractor to make a change in the Work, and if the City and the Contractor do not arrive at a mutually acceptable increase or decrease in the Contract Amount, the contractor shall not use any such lack of mutual acceptance as a basis or cause to stop or otherwise delay the progress or the execution and completion of any of the work ordered, directed or required pursuant to the Contract Documents.

If the Contractor believes an event or situation has occurred which justifies a change in the Contract Amount or Contract Time, he shall deliver a written notice to the City Manager or designee. Each such written notice shall be delivered promptly and no later than fifteen (15) business days after the Contractor first discovered the occurrence. The Contractor shall be deemed to have waived the right to collect any and all costs incurred more than fifteen (15) business days prior to the date of delivery of the written notice and shall be deemed to have waived the right to seek an extension of the Contract Time with respect to any delay in the Progress Schedule which accrued more than fifteen (15) business days prior to the date of delivery of the written notice.

Any such notice shall include sufficient detail to explain the basis of entitlement to a claim for an adjustment to the Contract Amount of Contract Time. When requested by the City Manager or designee, the Contractor shall furnish any additional information and details as may be required to determine the facts or allegations involved, which shall be provided within fifteen (15) business days of the request unless a longer time period is allowed by the City Manager or designee.

The Contractor shall prepare bids detailing proposed adjustments to Contract Amount and/or Contract Time and submit them to the City Manager or designee within fifteen (15) business days of the City's issuance of a proposed Change Order or the Contractor's submitting a written notice of a change or claim for an adjustment to the Contract Amount or Contract Time. Contractor's bids shall be irrevocable for a period of at least sixty (60) business days after receipt by the City. Any delay in the submittal of a complete, adequate and acceptable bid will not justify an increase in Contract Amount or Contract Time. Contractor agrees that it shall give the City access to any and all of Contractor's and Subcontractors' books, records and other materials relating to proposed Change Orders and other claims for adjustment to Contract Amount or Contract Time.

CHANGE OF CONTRACT AMOUNT

The Contract Amount constitutes the total compensation payable to the Contractor for performing the Work. All duties, responsibilities and obligations assigned to or undertaken by the Contractor shall be at his expense without change in the Contract Amount. The Contract Amount may only be changed by written Change Order issued by the City. Any claim for an increase in the Contract Amount shall be in writing and delivered to the City Manager or designee within fifteen (15) business days of the occurrence of the event giving rise to the claim.

All claims for adjustment in the Contract Amount shall be determined by the City Manager or designee. However, no claim for an adjustment to the Contract Amount will be considered for unforeseeable causes that were beyond the fault or negligence of the Contractor or his Subcontractors or supplier such as acts of God, floods, riots, etc. This restriction does not restrict submission of claims for additional Contract Time due to events of this nature. Any change in the Contract Amount shall be incorporated in a Change Order.

Contractor bids or claims shall cover all aspects of the Work involved and shall be fully documented and itemized as to all costs, quantities and charges for overhead and profit. Amounts for Subcontractors or Suppliers at any tier shall be similarly supported. When determining Subcontractors' costs, the methods to

be used shall be those used for the Contractor's costs, except that the term "Subcontractor" shall replace the term "Contractor," context permitting.

Changes in Contract Amount for extensions in Contract Time shall exclude costs that are unaffected or do not relate to the extension in Contract Time, such as: (a) operating costs of construction equipment assigned to the Work on a continuing basis, (b) operating costs and owned/rental costs of construction equipment (crane used for specific lifts, concrete pump used for specific pours, etc.), and (c) fully paid site facilities, tools, etc.

The value of any Work covered by a Change Order or of any claim for an increase or decrease in the Contract Amount where the Work involved is covered by unit prices contained in the Contract Documents shall be determined by application of unit prices to the quantities of the items involved. If the quantities originally contemplated are so changed in a proposed Change Order, that application of the Unit Prices to the quantities proposed will cause substantial inequity to the City or the Contractor, the applicable unit price(s) shall be equitably adjusted by mutual agreement.

If the value of work covered by a Change Order cannot be established or mutually agreed to utilizing previously established unit rates, the value shall be determined by the City on the basis of an estimate of the out-of-pocket cost and percentages that are acceptable to the City for overhead and profit. The out-of-pocket cost shall only include those direct costs which are needed to perform the work such as labor (including payroll taxes, fringe benefits, labor burden and workers' insurance), materials, equipment, and other incidental out-of-pocket construction costs directly involved in the work, including but not limited to small tools, expendables and material costs but shall not include project management or project supervisory costs unless the Change Order includes an increase in the Contract time.

In such case, the Contractor will submit in the form prescribed by the City an itemized cost breakdown together with supporting data.

The amount of credit to be allowed by the Contractor to the City for any such change which results in a net decrease in cost, will be the amount of the actual net decrease as determined by the City. When both additions and credits are involved in any one change, the combined overhead and profit shall be figured on the basis of the net increase, if any.

To be eligible for consideration, the Contractor's written claim for a change in the Contract price, including claim(s) from sub-contractors, shall include an itemized cost breakdown with supporting data as described below:

A. For labor: Provide written documentation from the Contractor and Subcontractors or others as appropriate in the form of a detailed breakdown by each labor classification involved indicating the number of hours of Work involved and the hourly payroll rate applicable to each to substantiate the basis and amount of the direct labor cost. The direct labor cost may be increased to provide an allowance for indirect payroll costs (labor burden), such as payroll taxes, fringe benefits, and workers insurance after all premium discounts, rebates and other appropriate reductions have been taken.

B. For material, supplies, equipment, furnishings, etc., to be installed or included in the Work: Provide written documentation from the Contractor and Subcontractors, suppliers, etc., to substantiate the basis and amount of the various cost items involved. Material costs shall reflect the Contractor's reasonably anticipated net actual cost after consideration of trade discounts and volume rebates.

C. For construction equipment: Provide written documentation in the form of a detailed breakdown by each construction equipment category, indicating the applicable unit rates (i.e., dollar amount per hour, dollar amount per day etc.,) and the number of hours, days, etc. to substantiate the basis and amount of the construction equipment out-of-pocket costs.

CHANGE OF CONTRACT TIME

The Contract Time may only be changed by written Change Order. Any claim for an extension in the Contract Time shall be in writing and include an analysis of the Progress Schedule as further described in the Specifications and shall be delivered to the City Manager or designee within fifteen (15) business days of the occurrence of the event giving rise to the claim. All claims for adjustment in the Contract Time shall be determined by the City Manager or designee. Any change in the Contract Time resulting from any such claim shall be incorporated in a Change Order. The Contract Time may be extended for an amount equal to time lost due to unforeseeable causes beyond the control of the Contractor (and his Subcontractors and Suppliers) if he makes a claim therefrom. Such delays shall include, but not be restricted to, acts or neglect by any separate Contractor employed by the City; fires; floods; labor disputes; epidemics; or acts of God.

All time limits stated in the Contract Documents are of the essence to the Contract. The stated time limits are agreed to be adequate to complete the work, including the procurement, manufacture and delivery of all material and equipment required, and account for any and all potential impact, delays, disruptions and costs that may be expected.

CITY'S RIGHT TO DIRECT PURCHASE

The City has reserved the right to purchase certain items and materials for this project directly in an effort to save applicable sales tax in compliance with Florida Law.

The City will issue purchase orders directly to the vendors supplying the equipment being directly purchased by the City for this project. Each Purchase Order will be accompanied by the City's Certificate of Exemption and a Certificate of Entitlement. All direct purchase vendor invoices will be issued to the City of St. Pete Beach, and the City will issue payment to each direct purchase vendor from City funds. The City will take title to the equipment at time of delivery from the vendor and will issue a separate Certificate of Entitlement for each purchase order.

The Contractor shall assist the City with receipt of materials furnished by the City in accordance with these Special Provisions including, but not limited to, verifying correct quantities, verifying documents of orders in a timely manner, providing and obtaining all warranties and guarantees required by the Contract Documents, assist with inspection of the goods at the time of delivery and notify the City immediately of any deficiencies noted. It is understood that the owner assumes the risk of damage or loss during the time that the building materials are physically stored at the job site prior to their installation or incorporation into the project. The Contractor shall coordinate with the City regarding the delivery schedules, sequence of delivery, loading orientation, and other arrangements normally required by the Contractor for the particular material furnished.

As City Furnished Materials are delivered to the job site and accepted by the City, the City shall notify the Contractor who will assist the City to visually inspect all shipments from the suppliers. The City will approve the vendor's invoice for material delivered upon adequate inspection and recommendation of the Contractor. The City shall assure that each delivery of City Furnished Materials is accompanied by documentation adequate to identify the Purchase Order against which the purchase is made and Contract Documents including but not limited to Contract, Plans, Specifications, and approved Shop Drawings. This documentation may consist of a delivery ticket, bill of lading and an invoice from the supplier conforming

to the Purchase Order together with such additional information as the City may deem necessary.

PAYMENTS FOR WORK COMPLETED

Partial payments will be made as the work progresses (if applicable) at the end of each calendar month, or as soon thereafter as practicable on estimates made by the City Manager or designee and as approved by the City, provided that the Contractor is performing the overall job in a diligent manner. In making partial payments, there shall be retained five percent (5%) on the amount of each estimate until final completion and acceptance of all work covered by the Contract. Upon completion and acceptance of the work, the City Manager or designee shall issue a certificate that the work has been completed and accepted by them under the conditions of the Contract and shall make and approve the final estimate of the work. The entire balance found to be due the Contractor, including that retained by the City, should be paid to the Contractor. Such payment shall be conditioned, however, upon the submission by the Contractor of evidence satisfactory to the City that all claims for labor, material, and any other outstanding indebtedness in connection with the Contract have been paid. Such payment shall also be conditioned upon approval and acceptance of the construction and improvements by the City.

If after the work has been substantially completed, full completion thereof is materially delayed through no fault of the Contractor and the City Manager or designee so certifies, the City shall upon the Certificate of the City Manager or designee, and without terminating the Contract make payment for the balance due for that portion of the work fully completed and accepted. Such payment shall be made under the terms and conditions governing final payment, except that it shall not constitute a waiver of claim. If such delay occurs and payment is made under this clause, the Contractor shall nevertheless be prepared to complete the work in a timely manner upon the remedy or removal of such delay, and shall be bound under this Contract for the completion of such work unless this Contract is otherwise terminated. All payments will be made in accordance with the Local Government Prompt Payment Act, Chapter 218, Florida Statutes.

PAYMENTS WITHHELD

The City Manager or designee may withhold, or, on account of subsequently discovered evidence, nullify the whole or part of any estimate to such extent as may be necessary to protect the City from loss on account of:

a) Defective work not remedied

b) Claims and/or liens filed or reasonable evidence indicating probable filing of claims

c) Failure of the Contractor to make payments properly to Subcontractors or for material or labor

d) A reasonable doubt that the Contract can be completed for the balance then unpaid

e) Damage to another Contractor

f) Failure of the Contractor to keep their work progressing in accordance with their time schedule

FINAL PAYMENTS

Upon the completion and acceptance of the work, the City Manager or designee shall issue a certificate that designates that the whole work provided for in this Contract has been completed and accepted by him under the conditions and the terms thereof and shall make the final estimate of the work. After issuance of the certificate, the entire balance found to be due the Contractor, including said retained percentage by the City in accordance with existing state laws as may be retained lawfully by said City, shall pay excepting such

sums to the Contractor.

Before the approval of the final payment, the Contractor shall submit evidence satisfactory to the City that states that all payrolls, materials, bills and outstanding indebtedness in connection with this Contract have been paid.

LIENS

If at any time there shall be evidence of any lien or claim for which the City might become liable and which is chargeable to the Contractor, the City shall have the right to retain out of any payment then due or thereafter to become due, an amount sufficient for complete indemnification against such lien or claim. In the event the City has already paid to the Contractor all sums due under this contract or the balance remaining unpaid is insufficient to protect the City, the Contractor and his Surety shall be liable to the City for any loss so sustained.

RESPONSIBILITY OF THE CITY MANAGER OR DESIGNEE

The term "City Manager or designee" wherever used in the Contract shall be the City of St. Pete Beach or its duly authorized representative. Notices of any change in the City Manager or designee shall be given in writing by the City to the Contractor. The City Manager or designee shall have full authority to interpret the Plans and Specifications and shall determine the amount, quality, and acceptance of the work and supplies to be paid for under the Contract and every question relative to the fulfillment of the terms and provisions therein. It shall be the duty of the City Manager or designee to enforce the Plans and Specifications in a fair and unbiased manner. If a variation from any requirements is allowed the City Manager or designee shall grant the same in writing with the reasons for his action outlined, and such action will not invalidate or change the Contract in any other manner.

INTENT OF PLANS AND SPECIFICATIONS

The Contractor shall keep on the job a copy of the Plans and Specifications and shall at any time give the City Manager or designee access thereto. Anything mentioned in the Specifications and not shown on the Plans or shown on the Plans and not mentioned in the Specifications, shall be of like effect as if shown or mentioned in both. The Contractor shall not take advantage of any errors, discrepancies or omissions that may exist in the Plans and Specifications but shall immediately call them to the attention of the City Manager or designee whose interpretation or correction thereof shall be conclusive. Should a conflict occur between the General Specifications and any Supplemental Specifications and/or Plans, the latter shall govern.

LICENSES AND PERMITS

The Contractor shall obtain and pay for all necessary City licenses and work permits and shall faithfully comply with all laws, ordinances and regulations, (Federal, State or local) which may be applicable to the operations to be conducted hereunder, except for those permits obtained by the City. Notwithstanding the provisions above, the contractor is responsible for non-compliance of all permit requirements, including all fines resulting from Contractor's non-compliance of said requirements.

Chapter II, Section II-4, "Registration of Licenses Obtained From Other Municipalities:" "Persons, partnerships, corporations, or other business entities doing business with the City who are not required to obtain a City occupational license, but who must have either a State or County or Municipal occupational license from another municipality, shall register such occupational license with St. Pete Beach Community Development Department. The City may charge a fee for such registration." The Contractor shall be

responsible for obtaining all City, County, State and Federal permits required by those government agencies and must provide documentation of receipt of those permits prior to project commencement. This shall include a notice to commence work letter and the applicable fee, if required. Any sub-contractor hired by the contractor awarded the project, MUST also register their license with the City.

SUPERINTENDENCE

The Contractor shall constantly superintend all the work embraced in this Contract in person or by a responsible agent who shall have in writing, full authority to act for them and to carry out all the instructions given by the City Manager or designee.

LABOR PROVISIONS

The Contractor and his Subcontractors shall discharge, whenever ordered to do so by the City Manager or designee, any employee who is disorderly or whose conduct in the opinion of the City Manager or designee is detrimental to the prosecution of the work. No person whose age or physical condition is such as to make this employment dangerous to his/her health and safety or to the health and safety of others shall be employed on the work, and in no event shall any persons under the age of sixteen (16) years be employed.

INSURANCE

The Contractor shall procure and maintain at his/her own expense, during the life of the Contract, liability insurance as hereinafter specified. All such insurance shall be subject to the approval of the City for adequacy of protection and shall include a provision preventing cancellation without twenty (20) business days prior notice to the City in writing. The City shall be included as an additional insured on all liability insurance. The liability insurance required is as follows: Contractor's General Public Liability and Property Damage Insurance issued to the Contractor and protecting the Contractor from all claims for personal injury, including death, and all claims for destruction of or damage to property, arising out of or in connection with any operations under this Contract, whether such operations be by the Contractor or by any Subcontractor hired by the Contractor or anyone directly or indirectly employed by the Contractor or hired by the Contractor.

The successful Contractor shall supply and maintain insurance which defends, indemnifies and holds harmless the City of St. Pete Beach, its officers, employees and agents from and against any and all liability, damage claims, demands, costs, judgments, fees, attorney's fees or loss arising directly out of acts or omissions hereunder by the Contractor or third party under the direction or control of the Contractor. Such general and excess liability coverage shall be primary to any other coverage carried by the City of St Pete Beach. Contractor must furnish the City with Certificate of Insurance prior to commencement of work. An approved Certificate of Insurance furnished by the Contractor's carrier to guarantee the Contractor being insured with the City of St Pete Beach must be named as a certificate holder for this contract. The following minimum coverage:

- Commercial General Liability Insurance $1,000,000.00.
- Comprehensive General Liability Insurance of $1,000,000.00 each occurrence.
- Personal Injury for $1,000,000.00 each occurrence.
- Automobile Liability $1,000,000.00.
- General Workers Compensation Insurance as required by Florida law.
- Longshore Harbor Workers Compensation Insurance

PROTECTION OF WORK AND PROPERTY

The Contractor shall continuously maintain adequate protection of all their work and materials from damage or theft and shall protect the City's property and all adjacent property from injury or loss arising in connection with activities under their Contract. The Contractor shall make good any such damage, injury, or loss, except such as may be caused by agents or employees of the City.

The Contractor shall take, use, provide, and maintain all necessary precautions, safeguards, and protection to prevent accidents, or injury to persons or property on, about, or adjacent to the site of the work. Should the situation arise that physical security is needed the Contractor will provide security on off days and holidays. The Contractor shall be responsible for all charges incurred with such action.

The Contractor shall post danger signs warning against any hazards created by the work being done under their Contract. They shall designate a responsible member of their organization on the work, whose duty shall be the prevention of accidents, and the name of the person so designated shall be reported to the City Manager or designee and City in writing. In an emergency affecting the safety of life, or of the work or adjoining property, the Contractor, without special instruction or authorization from the City Manager or designee, or City, is hereby permitted to act, at their own discretion, to prevent such threatened loss or injury, and they must take such action if so instructed or authorized by the City Manager or designee. The Contractor shall also protect adjacent property as required by law.

PARKING

The Contractor shall arrange with City Manager or designee for temporary parking areas to accommodate construction personnel and construction equipment. Note that limited parking spaces are available in the City of St. Pete Beach. The Contractor will be asked to coordinate with the City's representative on site on a regular basis to minimize the impact on residents and visitors.

TRANSPORTATION, HANDLING AND STORAGE

The Contractor shall transport, handle, protect and store products in accordance with manufacturer's instructions and all environmental regulatory agencies.

VEHICLES

Business vehicles shall be identified on both sides with the name of the company.

ENVIRONMENTAL PROTECTION

It shall be the Contractor's responsibility to implement construction methods, best management practices, and erosion control methods that avoid water pollution as required by the State of Florida Department of Environmental Protection (FDEP), City of St. Pete Beach, and Pinellas County. Any Contractors in violation of the City of St. Pete Beach Regulations, Pinellas County Regulations, Florida Department of Environmental Protection Regulations, or any other regulatory agency regulations shall be the sole responsibility of the Contractor. The Contractor shall hold harmless the City of St. Pete Beach and the City Manager or designee from any fines and litigation resulting from the Contractor's actions. The Contractor shall pay all attorneys' fees, fines, penalties and any other such expenses resulting from the Contractor's actions. The Contractor shall provide all necessary measures to prevent any materials whatsoever from entering the waterway except for those materials, which are shown, on the plans as completed structures. The Contractor shall provide MSDS sheets to the City Manager or designee on all applicable materials before applying those materials. The Contractor shall secure the necessary education, certifications,

licenses and permits required by state and local agencies to operate and manage a construction site, including but not limited to, FDEP requirements related to Coastal Construction Control Line. The Contractor shall abide by all rules and regulations set forth and required by the City of St. Pete Beach's MS4 NPDES Permit.

TIMELY DEMAND FOR STAKES AND INSTRUCTIONS

The Contractor shall provide reasonable and necessary materials, opportunities, and assistance for setting stakes and making measurements, including the furnishing of a rodman, or a chainman at intermittent times during the construction period. They shall not proceed until they have received such stakes and instructions as may be necessary as the work progresses. The work shall be done in strict conformity with such stakes and instructions. The Contractor shall carefully preserve benchmarks, reference points and stakes, and in case of willful or careless destruction, they will be charged with the resulting expense and shall be responsible for any mistakes that may be caused by their unnecessary loss or disturbance.

WORKMANSHIP

The Contractor acknowledges that they have satisfied themselves as to the nature and location of the work; the general and local conditions including but not restricted to those bearing upon transportation, disposal, handling and storage of materials; availability of labor, water, electric power, roads; and uncertainties of weather, surface conditions, subsurface conditions, tides or similar physical conditions at the site, the character of equipment and facilities required to prosecute the work. Any failure by the Contractor to acquaint themselves with any aspect of the work or with any of the applicable conditions shall not relieve the Contractor from the responsibility to successfully perform the work under the Contract Documents, nor shall it be considered the basis for any claim for additional time or compensation.

UTILITIES

The Contractor shall anticipate all underground obstructions such as water lines, gas lines, sewer lines, utility lines, or any other public or private facilities and debris. In all cases where existing utility lines may be interfered with by the work, the Contractor shall give a minimum of thirty-six (36) hours' notice to the owners of such utilities, to permit them to relocate the lines prior to construction. No extra payment shall be allowed for the removal, replacement, repair or possible increased cost caused by underground obstructions. The location of existing structures and utilities provided in the plans are approximate only. Any damage to existing structures to remain or work of any kind shall be repaired or restored promptly by, and at the expense of the Contractor.

The Contractor shall at all times protect all desirable trees, plants, curbs, sidewalks, irrigation components, and structures not requiring removal to accomplish the work, whether or not they are shown on the plans. The Contractor must contact the City to obtain tree removal permits for the removal of any tree not identified for removal in the Project Plans.

In matters of restoration, all materials, construction, and workmanship shall be acceptable to, and approved by the City of St. Pete Beach and the City Manager or designee. No changes in size, shape, configuration, location, materials, or construction shall be made without prior written authorization from the City Manager or designee. Any demolition debris and other debris shall be hauled offsite and properly disposed of by the Contractor and shall be inclusive to the prices as stated in the BID SCHEDULE, unless otherwise stipulated as part of the project to remain.

No interruption of ingress and egress to private property shall be made unless the Contractor has made prior arrangements acceptable to the owner of the affected property. The City Manager or designee shall

notify affected residents/property owners of impending activity or inconvenience via door hanger.

The Contractor shall provide all traffic control devices utilized during construction and meet the requirements set forth in the Florida State Department of Transportation "Manual on Traffic Control and Safe Practices for Street and Highway Construction, Maintenance, and Utility Operations."

CLEANING UP

Upon completion or termination of the work the Contractor shall, as directed by the City Manager or designee, remove from the vicinity of the work all equipment and temporary structures, waste materials and rubbish resulting from his operations, leaving the premises in a neat and presentable condition. All debris generated by the Contractor will be removed before leaving the area. All areas will be raked to remove smaller debris. All surrounding sidewalks, parking lots and roadways will be cleared of any dust or debris generated by the Contractor. In the event of their failure to do so, the City at the expense of the Contractor may do the same, and their Surety shall be responsible.

DEFECTIVE WORK OR MATERIAL

The Contractor shall promptly remove from the premises all work and materials condemned by the City Manager or designee as failing to conform to the Contract, whether incorporated or not, and the Contractor shall promptly replace and re-execute his own work in accordance with the Contract and without expense to the City and shall bear the expense of making good all work of other Contractors destroyed or damaged by such removal or replacement.

If the Contractor does not remove such condemned work or materials within a reasonable time after notice, the City may remove them and store the materials at the expense of the Contractor. If the Contractor does not pay the expense of such removal within ten (10) business days' time thereafter, the City may, upon thirty (30) business days written notice sell such materials at auction or at private sale and shall account for the net proceeds thereof after deducting all the costs and expenses that should have been borne by the Contractor.

DISPUTE RESOLUTION

The Contract shall be construed under Florida law. The parties agree that all controversies, claims and other matters in question between the parties arising out of or relating to this Contract or its breach shall be resolved through mediation. Upon notice of any party to the Contract of a dispute, question or controversy, the parties shall agree to the appointment of a qualified mediator. A qualified mediator is a person who has received at least forty (40) hours of mediation training and has actual experience as a mediator in resolving contract disputes. If the dispute, question or controversy is not resolved through mediation within sixty (60) business days of a notice of the dispute between the parties, the City reserves the right to seek resolution through court action.

INDEMNIFICATION

In consideration of the payment of ten dollars ($10.00) as part of the above purchase price, Contractor shall indemnify, defend, and hold harmless the City, its officers and employees, from liabilities, damages, losses and costs, including but not limited to, reasonable attorney's fees, to the extent caused by the negligence, recklessness, or intentional wrongful misconduct of the responding firm and any persons employed or utilized by the responding firm in the performance of the Contract.

GENERAL WARRANTY

Neither the final certificate nor any provision in the Contract Documents nor partial or entire occupancy of the premises by the City shall constitute an acceptance of work not done in accordance with the Contract Documents or relieve the Contractor of liability in respect to any express warranties or responsibility for faulty materials or workmanship. The Contractor shall remedy any defects in the work and pay for any damage to other work resulting therefrom that shall appear within a period of eighteen (18) months from the date of final acceptance of the work, unless a longer period is specified. The City shall give notice of observed defects with reasonable promptness.

LAND OF CITY, USE OF, BY CONTRACTOR

The City shall provide the land upon which the work under this Contract is to be done, and will, so far as is convenient, permit the Contractor to use as much of the land as is required for the erection of temporary construction facilities and storage of materials, together with the right of access to same, but beyond this, the Contractor shall provide, at his/her cost and expense, any additional land required. It will be the responsibility of the Contractor to repair or restore to the satisfaction of the City, at their own expense, any damage to land used for the above stated activities or any other activities approved by the City.

OTHER WORK

Wherever work being done by the City or by other Contractors is contiguous to work covered by this Contract, the respective rights of the various interests involved shall be established by the City Manager or designee to secure the completion of the various portions of the work in general harmony.

OTHER CONTRACTS

The City may award other Contracts. The Contractor shall fully cooperate with such other Contractors and carefully fit his/her own work to that provided under other Contracts, as may be with the performance of work by any other Contractor or City.

COOPERATIVE PURCHASING

Pursuant to their own governing laws and subject to the agreement of the Contractor, governmental entities may make purchases under the terms and conditions contained in the executed Contract, if agreed to by Contractor. Such purchases are independent of the Contract between the City and the Contractor, and the City is not a party to these transactions. Agencies seeking to make purchases under this Contract are required to follow the requirements of Rule 60A-1.045(5), F.A.C.

DELAYS AND EXTENSION OF TIME

If the Contractor should be delayed at any time in the progress of the work by an act or neglect of the City or the City Manager or designee, or of any employee of either, or by any separate Contractor employed by the City, or by changes ordered in the work, or by strike, lockouts, fire, unusual delay in transportation, unavoidable casualties, or any cases beyond the Contractor's control, or by delay authorized by the City Manager or designee, or by any cause which the City Manager or designee shall decide to justify the delay, then the time of completion shall be extended for such reasonable time as the City Manager or designee may decide. No such extension shall be made for a delay that occurs more than five (5) business days before a claim is made in writing to the City Manager or designee. In the case of a continued cause of delay, only

one (1) claim is necessary. This section does not exclude the recovery of damages for delay by either party under other provisions in the Contract Documents.

CITY'S RIGHT TO TAKE OVER THE WORK

If the Contractor shall be adjudged bankrupt, or if they should make a general assignment for the benefit of its creditors, or if a receiver should be appointed to take over their affairs, or if they should fail to prosecute their work with due diligence and carry the work forward in accordance with its' work schedule and the time limits set forth in the Contract Documents, or if they should fail to substantially perform one or more of the provisions of the Contact Documents to be performed by them, the City may serve written notice on the Contractor and the Surety on its' performance bond, stating the City's intention to exercise one of the remedies hereinafter set forth and the grounds upon which the City bases its right to exercise such remedy. In any event, unless the matter complained of is satisfactorily cleared within ten (10) business days after the service of such notice, the City may, without prejudice to any other right or remedy exercise one of such remedies at once; having first obtained a certificate from the City Manager or designee that such sufficient cause exists to justify such action.

The City may terminate the services of the Contractor, which termination shall take effect immediately upon service of notice thereof on the Contractor and their Surety, whereupon the Surety shall have the right to take over and perform the Contract. If the Surety does not commence performance of the Contract within ten (10) ten days after service of the notice of termination, the City may itself take over the work, take possession of and use all materials, tools, equipment, and appliances on the premises and prosecute the work to completion by such means as it shall deem best. In the event of such termination of their service, the Contractor shall not be entitled to any further payment under their Contract until the work is completed and accepted. If the City takes over the work and the unpaid Contract balance exceeds the cost of completing the work, including compensation for damages or expenses incurred by the City through the default of the Contractor, the excess unpaid Contract balance shall be paid to the Contractor. If the City takes over the work and the unpaid Contract balance does not exceed the cost of completing the work, including compensation for damages or expenses incurred by the City through the default of the Contractor, the Contractor and his Surety shall pay the difference to the City. The City Manager or designee shall certify such cost, expenses, and damages.

The City may take control of the work and either make good the deficiencies of the Contractor itself or direct the activities of the Contractor in doing so, employing such additional help as the City deems advisable. In such event, the City shall be entitled to collect from the Contractor and his Surety, or to deduct from any payment then or thereafter due the Contractor, the costs incurred by it through the default of the Contractor, provided the City Manager or designee approves the amount thus charged to the Contractor.

The City may require the Surety on the Contractor's bond to take control of the work at once and see to it that all deficiencies of the Contractor are made good with due diligence. As between the City and the Surety, the entire cost of making good such deficiencies shall be borne by the Surety. If the Surety takes over the work, either upon termination of the services of the Contractor or upon instructions from the City to do so, the provisions of the Contract Documents shall govern in respect to the work done by the Surety, the Surety being substituted for the Contractor as to such provisions, including provisions as to the payment for the work and provisions of this section as to the right of the City to do the work itself or to take control of the work.

RIGHT OF OCCUPANCY

The City shall have the right, if necessary, to take possession of and to use any completed or partially

completed portions of the work, if such use be approved by the City Manager or designee even if the time for completing the entire work or such portions of the work has not expired and even if the work has not been finally accepted. Such possession and use shall not constitute an acceptance of such possession and use if it materially interferes with the Contractor's operations. The City shall also have the right to enter the premises with the Contractor for the purpose of doing work not covered by its Contract.

ACCEPTANCE

Final inspection and acceptance of the work shall be made for the City by the City Manager or designee. Such inspection shall be made as soon as practical after the Contractor has notified the City in writing that the work is ready for such inspection.

WAIVER

It is expressly understood and agreed that any waiver granted by the City Manager or designee of any term, provision, or covenants of the Contract shall not constitute a precedent or breach of the same or any other terms, provisions, or covenants of the Contract. Neither the acceptance of the work by the City nor the payment of all or any part of the sum due the Contractor hereunder shall constitute a waiver by the City of any claim which the City may have against the Contractor or Surety under this Contract or otherwise.

INSPECTION

The City Manager or designee and his representative shall, at all times, have access to the work during its construction and shall be furnished with every reasonable facility for ascertaining that the stock and materials used and employed, and the workmanship, are in accordance with the requirements and intentions of the Plans. All work done and all materials furnished shall be subject to their inspection and approval by the City Manager or his designee. If any work should be covered up without approval or consent of City Manager or designee, it must, if required by the City Manager or designee, be uncovered for examination at the Contractor's expense.

The City Manager or designee may order re-examination of questioned work and if so ordered, the Contractor must uncover the work. If such work were found in accordance with the Contract Documents, the City shall pay the cost of re-examination and replacement. If such work be found not in accordance with the Contract Documents, the Contractor shall pay such costs unless they show that the defect in the work was caused by another Contractor, and in that event, the City shall pay such cost.

The inspection of the work shall not relieve the Contractor of any of their obligations to fulfill their Contract as prescribed, and defective work shall be made good and unsuitable materials shall be rejected, notwithstanding that such defective work and materials have been previously overlooked and accepted on estimates for payment. All work shall be tested to the satisfaction of the City Manager or designee before acceptance.

BID REVIEW AND CONTRACT AWARD

Failure to submit all documents requested at the time of bid may deem the Contractor's bid ineligible for award. The City of St. Pete Beach reserves the right to reject any or all bids or parts of bids or accept any bid or part thereof deemed to be in the best interests to the City of St. Pete Beach. The City shall be the sole final judge of qualifications of the bidder to perform service and reserves the exclusive right to accept or reject any bids as it deems to be in the best interests of the City. The City may waive any informality.

LOCAL, STATE AND FEDERAL COMPLAINCE REQUIREMENTS

The laws of the State of Florida do apply to any purchase made under this Request for Bid. Proposers shall comply with all local, state, and federal directives, orders and laws as applicable to their bid and subsequent contracts include but not limited to Equal Employment Opportunity, Minority Business Enterprise, and OSHA as applicable to this contract.

Compliance with Fla. Stat. 448.095:

- Contractor agrees to comply with all applicable portions of Fla. Stat. 448.095. Contractor must use the U.S. Department of Homeland Security's E-Verify System, hhtps://e-verify.uscis.gov/emp, to verify the employment eligibility of all employees hired on or after January 1, 2021 during the term of this Agreement.

- Subcontractors (i) Contractor shall also require all subcontractors performing work under this Agreement to use the E-Verify system for any employees they may hire during the term of this Agreement. (ii) Subcontractors shall provide Contractor with an affidavit stating the subcontractor does not employ, contract with, or subcontract with an unauthorized alien, as defined by Fla. Stat. 448.095 (iii) Contractor shall provide a copy of such affidavit to the City upon receipt and shall maintain a copy for the duration of the Agreement.

- Contractor must provide evidence of compliance with Fla. Stat. 448.05 by January 1, 2021. Evidence may consist of, but is not limited to, providing notice of Contractor's E-Verify number.

- Failure to comply with this provision is a material breach of the Agreement, and the City may choose to terminate the Agreement at its sole discretion. Contractor may be liable for all costs associated with the City securing the same services, inclusive, but not limited to, higher costs for the same services and rebidding costs (if necessary). Any challenge to termination under this provision must be filed in the Circuit Court no later than 20 calendar days after the date of termination. If this agreement is terminated for a violation of the statue by the Contractor, the Contractor may not be awarded a public agreement for a period of 1 year after date of termination.

RESERVES THE RIGHT

The City reserves the right to accept or reject any and/or all bids, to waive irregularities and technicalities, and to request re-submission. If only one bid is received by the bid date and time listed, the bid may or may not be rejected by the City depending upon bid review and the needs of the City.

The City reserves the right to select a firm with or without additional interviews and may decide to select any of the firms submitting bids. The City reserves the right to award the contract to a responsible proposer submitting a responsible bid, with a resulting negotiated agreement which is most advantageous and in the best interest of the City.

Proposers, bidders, their agents, and associates shall not contact or solicit any City Commission member, City employee, or official regarding this RFB during any phase of the bidding process. Failure to comply with the provision may result in disqualification of the bidder, at the option of the City. Only that individual listed, or an approved designee, as the contact person for this RFB shall be contacted.

SUBMITTAL WITHDRAWAL

After submittals are opened, corrections or modifications to submittals are not permitted, but a responding firm may be permitted to withdraw an erroneous submittal prior to the award by the City Commission, if the following is established:

- That the responding firm acted in good faith in submitting the submittal;
- That in preparing the submittal there was an error of such magnitude that enforcement of the submittal would work severe hardship upon the respondent;
- That the error was not the result of gross negligence or willful inattention on the part of the respondent;
- That the error was discovered and communicated to the City within twenty-four (24) hours of submittal opening, along with a request for permission to withdraw the submittal; or
- The responding firm submits documentation and an explanation of how the error was made.

CONE OF SILENCE

Respondents to this solicitation or persons acting on their behalf may not contact, between the release of the solicitation and the end of the 72-hour period following the agency posting the notice of intended award, excluding Saturdays, Sundays, and state holidays, any employee or officer of the executive or legislative branch concerning any aspect of this solicitation, except in writing to the procurement officer or as provided in the solicitation documents. Violation of this provision may be grounds for rejecting a response.

TERMINATION

The resulting contract may be canceled by the City when:

- Sufficient funds are not available to continue its full and faithful performance of this contract.
- There is sub-standard or non-performance of contract.
- The City wishes to terminate at any time and for any reason, upon giving thirty (30) days prior written notice to the other party.

The resulting contract may be canceled by either party in the event of substantial failure to perform in accordance with the terms by the other party through no fault of the terminating party.

FISCAL NON-FUNDING

If funds for the requested services described herein are not appropriated via the annual budget adoption process, the City reserves the right to cancel this Agreement immediately upon written notice to the vendor.

PROJECT RECORDS

The awarded firm shall maintain auditable records concerning the procurement to account for all receipts and expenditures, and to document compliance with the Contract. These records shall be kept in accordance with generally accepted accounting methods, and the City of St. Pete Beach reserves the right to determine the record-keeping method in the event of non-conformity. These records shall be maintained for three (3) years after final payment has been made and shall be readily available to City personnel with reasonable notice, and to other persons in accordance with the Florida Public Disclosure Statutes. Additionally, the awarded firm shall abide by and comply with Florida Statutes regarding public records. Specifically, the firm shall be aware of the provisions found in Section 119.0701, Florida Statutes.

Upon completion of the project, all reports, studies, recommendations, forms, and other project specific information will need to be submitted in paper and in an electronic file format (.PDF, .JPEG) on CD or USB storage device.

IV. REFERENCES & MINIMUM QUALIFICATIONS

Provide at least three (3) or more professional business references with which you have contracted to provide similar services in the past five (5) years. Include the name of the person, its organization and telephone number, fax number, and e-mail address. Include any governmental agencies, with the same contact and descriptive information for which you have provided similar service within the past five (5) years.

Provide a brief description of the history and capabilities of the firm. Describe the types of projects or services the firm performs/has performed and the dollar value of each. Provide information regarding your firm's ability to complete this project. Demonstrate that the firm's personnel have experience with similar projects.

Identify all unresolved and ongoing claims and disputes against your firm in excess of $500,000. Include any claims against the principals of your firm or any claims your company may have against a third party. Provide a history of litigation, including the outcomes, for the past five (5) years.

The responding firm shall provide a statement of assurance that the firm is not presently in violations of any statutes or regulatory rules that might have an impact on the firm's operations. All applicable laws and regulations of the State of Florida and ordinances and regulations of the City of St. Pete Beach will apply.

Provide the overall bonding capacity for the company and provide a history of any claims against the bidder's previous bonds for the past five (5) years.

The City shall be the sole final judge of qualifications of bidder to perform service and reserves the exclusive right to accept or reject any bid as it deems to be in the best interests of the City. The City reserves the right to make such investigation, as it deems necessary, to determine the ability of any proposer to perform the work or service requested. Failure to comply with the requirements of this section may be grounds for rejecting a response.

V. PUBLIC ENTITY CRIMINAL AFFIDAVIT

SWORN STATEMENT – PUBLIC ENTITY CRIMES

PURSUANT TO § 287.133 (3)(a), FLORIDA STATUTES, ON PUBLIC ENTITY CRIMES
THE FORM MUST BE SIGNED AND SWORN TO IN THE PRESENCE OF A NOTARY PUBLIC OR OTHER OFFICIAL AUTHORIZED TO ADMINISTER OATHS.

1. This sworn statement is submitted to: City of St. Pete Beach

   by: _____
   (Print individual's name and title)

   for: _____
   (Print name of entity submitting sworn statement)

   at: _____
   (Business address)

   and (if applicable), its Federal Employer Identification Number (FEIN):

   _____
   (FEIN)

   or, if the entity has no FEIN, include the Social Security Number:

   _____
   (SSN)

   by the individual signing this sworn statement:

   _____
   (Signature)

2. I understand that a "public entity crime" as defined in § 287.133 (1)(g), Fla. Stat., means a violation of any State or Federal law by a person with respect to and directly related to the transaction of business with any public entity or with an agency or political subdivision of any other state or of the United States including, but not limited to, any bid or contract for goods or services, any lease for real property, or any contract for the construction or repair of a public building or public work, involving antitrust, fraud, theft, bribery, collusion, racketeering, conspiracy, or material misrepresentation.

3. I understand that "convicted" or "conviction" as defined in § 287.133 (1)(b), Fla. Stat., means a finding of guilt or a conviction of public entity crime with or without an adjudication of guilt in any Federal or State trial court of record relating to charges brought by indictment or information after July 1, 1989, as a result of a jury verdict, non-jury trial, or entry of a plea of guilty or nolo contendere.

4. I understand that an "affiliate" as defined in § 287.133 (1)(a), Fla. Stat., means:
   a. A predecessor or successor of a person convicted of a public entity crime or
   b. An entity under the control of any natural person who is active in the management of the entity and who has been convicted of a public entity crime. The term "affiliate" includes those officers, directors, executives, partners, shareholders, employees, members, and agents who are active in the management of an affiliate. The ownership by one (1) person of shares constituting a controlling interest in another person or a pooling of equipment or income among persons when not for fair market value under the arm's length agreement, shall be a prima facie case that one (1) person controls another person. A person who

knowingly enters into a joint venture with a person who has been convicted of a public crime in Florida during the preceding thirty-six (36) months shall be considered an affiliate.

5. I understand that a "person" as defined in Section 287.133 (1)(e), Fla. Stat., means any natural person or any entity organized under the laws of any state or of the United States with the legal power to enter into a binding contract and which bids or applies to bid on contracts let by a public entity, or which otherwise transacts or applies to transact business with a public entity. The term "person" includes those officers, directors, executives, partners, shareholders, employees, members, and agents who are active in management of an entity.

6. Based on information and belief, the **statement which I have marked below is true** in relation to the entity submitting this sworn statement (indicate which statement applies).

☐ Neither the entity submitting this sworn statement, nor any of its officers, directors, executives, partners, shareholders, employees, members, or agents who are active in the management of the entity nor any affiliate of the entity has been charged with and convicted of a public entity crime subsequent to July 1, 1989.

☐ The entity submitting this sworn statement or one (1) or more of its officers, directors, executives, partners, shareholders, employees, members, or agents who are active in the management of the entity or an affiliate of the entity has been charged with and convicted of a public entity crime subsequent to July 1, 1989.

☐ The entity submitting this sworn statement or one (1) or more of its officers, directors, executives, partners, shareholders, employees, members, or agents who are active in the management of the entity or an affiliate of the entity has been charged with and convicted of a public entity crime subsequent to July 1, 1989. However, there has been a subsequent proceeding before a Hearing Office of the State of Florida, Division of Administrative Hearings and the Final Order entered by the Hearing Officer determined that it was not in the public interest to place the entity submitting this sworn statement on the convicted vendor list (attach a copy of the final order).

I UNDERSTAND THAT THE SUBMISSION OF THIS FORM TO THE CONTRACTING OFFICE FOR THE PUBLIC ENTITY IDENTIFIED IN PARAGRAPH 1 ABOVE IS FOR THE PUBLIC ENTITY ONLY AND THAT THIS FORM IS VALID THROUGH DECEMBER 31 OF THE CALENDAR YEAR IN WHICH IT IS FILED. I ALSO UNDERSTAND THAT I AM REQUIRED TO INFORM THE PUBLIC ENTITY PRIOR TO ENTERING INTO A CONTRACT IN EXCESS OF THE THRESHOLD AMOUNT PROVIDED IN SECTION 287.017, FLORIDA STATUTES, FOR CATEGORY TWO OF ANY CHANGE IN THE INFORMATION CONTAINED IN THIS FORM.

STATE OF FLORIDA
COUNTY OF _____

The foregoing instrument was sworn to (or affirmed), subscribed, and acknowledged before me **by means of ☐ physical presence or ☐ online notarization**, this _____ day of _____, 2026, by _____, who is personally known to me or has produced _____ as identification.

(SEAL)

_____
Notary Public – State of Florida

_____
(Print, Type, Stamp, or Commissioned Name of Notary Public)

VI. NON-COLLUSION AFFADAVIT

STATE OF _____

COUNTY OF _____

I state that I_____of_____,

(Name and Title) (Name of Firm)

am authorized to make this affidavit on behalf of my firm and its owner, directors and officers. I am the person responsible in my firm for the price(s) and amount(s) of this Response, and the preparation of the Response. I state that:

1. The price(s) and amount(s) of this Response have been arrived at independently and without consultation, communication or agreement with any other Provider, potential provider, Proposal, or potential Proposal.

2. Neither the price(s) nor the amount(s) of this Response, and neither the approximate price(s) nor approximate amount(s) of this Response, have been disclosed to any other firm or person who is a Provider, potential Provider, Proposal, or potential Proposal, and they will not be disclosed before Proposal opening.

3. No attempt has been made or will be made to induce any firm or persons to refrain from submitting a Response for this contract, or to submit a price(s) higher that the prices in this Response, or to submit any intentionally high or noncompetitive price(s) or other form of complementary Response.

4. The Response of my firm is made in good faith and not pursuant to any agreement or discussion with, or inducement from, any firm or person to submit a complementary or other noncompetitive Response.

5. _____, its affiliates, subsidiaries, officers, director, and employees (Name of Firm) are not currently under investigation, by any governmental agency and have not in the last three years been convicted or found liable for any act prohibited by State or Federal law in any jurisdiction, involving conspiracy or collusion with respect to Proposal, on any public contract, except as follows:

I state that I and the named firm understand and acknowledge that the above representations are material and important, and will be relied on by the State of Florida for which this Response is submitted. I understand and my firm understands that any misstatement in this affidavit is, and shall be treated as, fraudulent concealment from the State of Florida of the true facts relating to the submission of responses for this contract.

Name of Organization: _____

Signed By: _____

Print Name: _____

The foregoing instrument was sworn to (or affirmed), subscribed, and acknowledged before me **by means of ☐ physical presence or ☐ online notarization**, this ____ day of _____, 2026, by _____, who is personally known to me or has produced _____ as identification.

(SEAL)

_____
Notary Public – State of Florida

_____
(Print, Type, Stamp, or Commissioned
Name of Notary Public)

VII. SPECIFICATIONS

No additional information other than what has been provided under “Scope of Work"

EXHIBIT "C"

Vendor Bid/Proposal

(Place Vendor's Bid/Proposal Behind this Page)

St. Pete Beach

The Sunset Capital of Florida

City of St Pete Beach
Request for Bid

Commercial Diving Services

Bids due on or before
04/08/2026 at 9:00 AM
EST(Deadline) Electronically Via Bonfire Only

Table of Contents

I. CONTRACTOR'S BID SUBMITTAL 3
II. BID FORM 4
III. GENERAL CONTRACT TERMS 5
IV. REFERENCES & MINIMUM QUALIFICATIONS 25
V. PUBLIC ENTITY CRIMINAL AFFIDAVIT 26
VI. NON-COLLUSION AFFADAVIT 28
VII. SPECIFICATIONS 29

Event	Date	Time
Publication of Bid	03/11/2026	8:00 AM
Pre-Bid Meeting	03/18/2026	9:30 AM
Deadline for Question Submission	03/25/2026	10:00 AM
Bid Receiving Deadline	04/08/2026	9:00 AM
Bid Opening	04/08/2026	9:30 AM

I. CONTRACTOR'S BID SUBMITTAL

The company that is submitting a bid declares that it has extensive experience in **Commercial Diving Services.**

The undersigned, as Bidder, hereby declares that the only person or persons interested in the Bid as principal or principals are named herein, and that no person other than herein mentioned has any interest in the Bid or in the Agreement to be entered into; that this Bid or Agreement is made without connection with any other person, company, or parties making a Bid; and that it is in all respects fair and in good faith without collusion or fraud.

The Bidder further declares that they have examined the site of the work and informed themselves fully in regard to all conditions pertaining to the place where the work is to be done; that they have examined the Plans and Specifications for the work and Contract Documents relative thereto, and have read all special provisions furnished prior to the opening of bids; and that they have satisfied themselves relative to the materials to be supplied and work to be performed.

The Bidder proposes and agrees, if the Bid is accepted, to contract with the City of St. Pete Beach, Florida, in the form of an Agreement specified for **"Commercial Diving Services"** in St. Pete Beach, Florida, in full and complete accordance with the shown, noted, described, and reasonably intended requirements of the Plans, Specifications, and Contract Documents, to the full and entire satisfaction of the City of St. Pete Beach, Florida.

The successful bidder shall be required to utilize the template Agreement in this Request for Bids (RFB) and any questions regarding the Agreement must be addressed during the RFB process before submittal. The City reserves the right to respond or not respond to questions in the form of an addendum.

The Bidder proposes to furnish all materials, equipment, labor, and perform the work submitted in their bid schedule for the City of St. Pete Beach **" Commercial Diving Services".**

COMPANY: Dive-Tech International, Inc DATE: 4/6/2026

ADDRESS: Post Office Box 3177 Pinellas Park FL 33780 PHONE: 727-541-1102

BIDDER: _____ NAME: Jame "Paul" Overby
(SIGNATURE) (PRINT NAME & TITLE)

STATE OF FLORIDA
COUNTY OF Pinellas

The foregoing instrument was sworn to (or affirmed), subscribed, and acknowledged before me **by means of ☒physical presence or ☐ online notarization,** this 6th day of April, 2026, by James Paul Overby, who is personally known to me or has produced Drivers license as identification.

(SEAL)

KRISTINE D. TAYLOR
Commission # HH 581075
Expires September 2, 2028

Kristine D. Taylor
Notary Public – State of Florida

(Print, Type, Stamp, or Commissioned Name of Notary Public)

SUBMIT BID TO:

Electronically via Bonfire Only

II. Bid Form

Pay Item	Description	Quantity	Unit	Unit Cost	Total Cost
Diver Team Labor					
	Three (3) Man Dive Team, Scheduled	40	Hour	$270.00	$ 10,800.00 -
	Three (3) Man Dive Team, Overtime	20	Hour	$405.00	$ 8,100.00 -
	Three (3) Man Dive Team, Unscheduled	40	Hour	$270.00	$ 10,800.00 -
	Additional Diver	8	Hour	$90.00	$ 720.00 -
	Additional Diver, Overtime	8	Hour	$135.00	$ 1,080.00 -
	Additional Diver, Unscheduled	8	Hour	$90.00	$ 720.00 -
	Written & Photo/Video Reports or Specialized Paperwork	10	Hour	$85/hour	$ 850.00 -
	Emergency Call-Out Fee	1	Each	$0.00	$ 0.00 -
				Subtotal	$ 33,070.00 -
Mobilization Rate, Per Occurrence					
	Mobilization Fee	5	Each	$575.00	$ 2,875.00 -
	Demobilization Fee	5	Each	$525.00	$ 2,625.00 -
				Subtotal	$5,500.00 -
Equipment					
	Work Boat / Barge	20	Day	$325.00	$ 6,500.00 -
	Hydraulic Unit	20	Day	$250.00	$ 5,000.00 -
	4-inch Hydraulic Submersible Pump	20	Day	$95.00	$ 1,900.00 -
	Jet Pump	20	Day	$125.00	$ 2,500.00 -
	4,000 PSI Water Blaster	20	Day	$150.00	$ 3,000.00 -
	Digital Underwater Camera	20	Day	$150.00	$ 3,000.00 -
	Underwater Video with Digital Capture	20	Day	$450.00	$ 9,000.00 -
	Fuel Charge	20	Day	$75.00	$ 1,500.00 -
	Small Pneumatic Tool	20	Day	$35.00	$ 700.00 -
	Shallow Water Dive Package	20	Day	$150.00	$ 3,000.00 -
	Additional Equipment (Cost plus 15%)	1	LS		
				Subtotal	$ 36,100.00 -
Materials					
	Additional Materials (Cost plus 15%)	1	LS		
				TOTAL	$ 74,670.00 -

** Scheduled labor is six (6) hour minimum onsite. Overtime is after eight (8) hours including nights, weekends, and holidays.*

III. GENERAL CONTRACT TERMS

REQUEST FOR BID

The City of St. Pete Beach is submitting this RFB for bids on the Commercial Diving Services.

LOCATIONS

The City of St. Pete Beach is soliciting bids from qualified Commercial Diving Services for the City.

BID SUBMITTALS

Bid documents must include a signed/notarized Contractor's Bid Submittal, Bid Form, References, Contractor's license and insurance certificates, and Public Entity Criminal Affidavit. The Contractor shall submit one electronic bid via Bonfire.

BIDDER INFORMATION

The City is not responsible for any Addendums or other supplementary information that is not received due to non-submittal of the aforementioned information. Please refer back to the city website (http:// www.stpetebeach.org/news-and-links/city-projects.html) for additional project information as it becomes available. The City reserves the right to decide whether to answer addendums or not. The City is not required to provide any additional information.

PRE-BID MEETING

An optional pre-bid meeting will be held on **03/18/2026 at 9:30 AM EST** via Microsoft Teams Video conference/Teleconference. Please contact the City's Procurement Manager (purchasing@stpetebeach.org) for a meeting invitation and Microsoft Teams Meeting instructions.

WRITTEN REQUESTS FOR INTERPRETATIONS/CLARIFICATIONS

No oral interpretations will be made to any firms as to the meaning of the scope of work or any other contract documents included in this **RFB.** All questions pertaining to the terms and conditions or scope of work of this Request for Bid **(RFB)** must be sent in writing only via email to the City Procurement Manager (purchasing@stpetebeach.org) and shall be received no later than **10:00 EST on 03/25/2026**. Responses to questions may be handled as an Addendum if the response would provide clarification to the requirements of the **RFB**. All such Addenda shall become a part of the contract documents. The City will not be responsible for any other explanation or interpretation of the proposed **RFB** made or given prior to the award of the contract. The City will not respond to questions received after the specified deadline. The City reserves the right to respond to any and all questions but is not required to do so.

BID PACKAGES

Sealed bids will be accepted by the City until **04/08/2026** at **9:00 AM** EST (Deadline). No bids shall be accepted by the City after this deadline – NO EXCEPTIONS. Bid Packages must be electronically submitted via Bonfire Clearly marked as: "**Commercial Dive Services**." If a link is needed for either site, please contact the Procurement Manager (purchasing@stpetebeach.org.) All Bidders are invited to attend this bid opening.

CONTACT INFORMATION

Sara Spain – Procurement Manager
Mailing Address - 155 Corey Avenue, St. Pete Beach, Florida 33706
E-mail - purchasing@stpetebeach.org

SCOPE OF WORK

The City of St. Pete Beach is seeking a qualified full service commercial diving Contractor with experience in a wide range of applications. The Contractor shall provide a qualified dive team, and all related diving equipment required to assist the City of St. Pete Beach with the cleaning, inspection, repair and maintenance of tide check valves, stormwater outfalls, manatee grates, subaqueous pipelines, piers, piles, and bulkheads.

The City of St. Pete Beach has 35 tide check valves, and 25 manatee grates installed at stormwater outfalls throughout the City. Services shall include:

- Debris Removal from Valve, Pipe, Endwalls, and Pit
- Marine Growth Removal from Valve, Pipe, Endwalls, and Pit
- Maintenance of Manatee Grates, when present
- Written and Video Reports of condition per cycle
- Repair and Replacement of in-line and outfall-end type Tidal Check Valves
- Hydraulic Dredging

Services must comply with relevant standards and regulations, including OSHA diving regulations and any applicable environmental guidelines.

CONTRACTOR TO FURNISH

- A Qualified Dive Team
- All Related Diving Equipment
- Underwater Video with Digital Capture
- Shallow Water Dive Package
- Small Pneumatic Tool
- Work Boat / Barge
- Hydraulic Unit
- 4-inch Hydraulic Submersible Pump
- Jet Pump
- 4000 PSI Water Blaster
- Digital Camera

THE CITY OF ST. PETE BEACH TO FURNISH

- A Representative to Coordinate Activities
- A Representative to View Video Real Time and Direct the Crew
- Access to Work Site
- Permits (If required)
- Assist with Lock-Out Tag-Out procedures (training or supervision as needed)
- Procurement of Tidal Check Valves (as needed)

SCHEDULE

Maintenance, cleaning and inspection shall be scheduled per occurrence and may include the full asset inventory or a portion of that inventory for each cycle. Maintenance cycles are to be performed quarterly, or more frequently as-needed, based on City requirements.

Tidal check valve, manatee grate, and other miscellaneous outfall repairs shall be scheduled per occurrence, as-needed.

The Contractor must provide at least 72 hours' notice for scheduling changes. Emergency response for unscheduled maintenance requests must be available within 24 hours.

PERFORMANCE METRICS

The following performance metrics will be used to evaluate the Contractor's work:

- Timeliness of completing tasks as per the agreed schedule.
- Accuracy and thoroughness of written condition reports.
- Compliance with safety standards and regulations.
- Responsiveness to unscheduled maintenance requests.

All reports must be submitted in a digital format (PDF or Word) within ten (10) days of completing each maintenance cycle. Reports should include:

- Detailed descriptions of completed tasks.
- Photographic and video evidence.
- Identified issues and recommendations for future maintenance.

PENALTIES

Failure to adhere to the schedule or meet performance standards may result in penalties, including:

- 5% reduction in payment for delayed work (per day).
- Rework at Contractor's expense for substandard services.

EMERGENCY SERVICES

The Contractor must provide emergency maintenance services within 24 hours of the City's request. The bid form includes an emergency call-out fee to account for this service.

Once a contract is awarded, the selected vendor will be required to submit a detailed fee schedule outlining the main pay items for the project. This fee schedule will be reviewed at the pre-construction meeting and will be used to review pay applications and evaluate project progress.

DETAILED SPECIFICATIONS

LOCATIONS

The locations will cover all tide check valves, stormwater outfalls, manatee grates, subaqueous pipelines, piers, piles, and bulkheads Citywide that are City owned throughout the City of St. Pete Beach Florida.

Standard work hours shall be from 7:30 AM until 6:00 PM, Monday through Saturday. No work shall take place on Sundays or on official City holidays without prior approval by the City Manager or designee at least 1 week prior to the scheduled work. A list of current official City holidays can be found on the City's Human Resources website at http://www.stpetebeach.org/hr/holidays.html. Contractor will coordinate scheduling of work with the City's Project Manager and City's Inspector.

ADDITIONAL WORK DETAILS

Contractors or persons wishing to bid on this project are licensed, bondable and insured in accordance to the City's requirements. The Contractor will furnish all necessary labor, materials, tools, equipment and supplies to complete the scope of work. Bid must also include all costs for licenses, permits, and any material disposal fees.

Bidders shall bring questions, discrepancies, omissions, conflicts or doubt as to meaning of any part of Contract Documents to the attention of the City of St Pete Beach Procurement Manager at least ten (10) business days before bid submittal deadline. Clarification of intent of Contract Documents, if necessary, shall be made available to bidders in the form of an Addendum. Failure to request clarification of interpretation of Contract Documents shall not relieve bidders of their responsibilities to perform the work.

The City of St. Pete Beach reserves the right to reject any or all bids or parts of bids, or accept any bid or part thereof deemed to be in the best interests to the City of St. Pete Beach.

STATEMENT OF WORK

The Contractor shall furnish and pay the cost, including sales tax and all other applicable taxes, licenses, permits and fees, of all the necessary materials not furnished by the City and shall furnish and pay for all the superintendence, labor, tools, equipment, transportation, and perform all the work required for the execution of all services listed in the Bidder's Proposal and Bid Form attached hereto and in strict accordance with the Plans, Specifications, and requirements of the City of St. Pete Beach which are attached hereto and made a part hereof, and any amendments thereto and such supplemental Plans and Specifications which may hereafter be approved.

BEGINNING DATE

The Contractor shall, within ten (10) business days after receipt of the Notice of Award and before commencement of any operations hereunder, execute the Agreement. Additionally, the Contractor shall, within twenty (20) business days after receipt of the Notice of Award, provide all required documentation to the City. The Contractor must commence construction activities within thirty (30) business days of NTP to prepare and procure materials. Any change to the start date or the work schedule included with this bid must be submitted in writing to and approved by the City Manager or designee.

COMPLETION OF WORK

The work will be completed on an as-needed basis. Each location that needs to be surveyed, repaired and/or worked on will constitute it's own "job". The contract will be for (3) three years from time of execution (Date of last signature) of the contract with (2) additional (1) one year extensions if agreed upon by the City and vendor. .

EXAMINATION OF SITE

Bidders may visit specific areas with advanced notice.

ASSURANCES

The responding Contractor shall provide a statement of assurance that the Contractor is not presently in violation of any statutes or regulatory rules that might have an impact on the firm's operations. All applicable laws and regulations of the State of Florida, and ordinances and regulations of the City of St. Pete Beach will apply.

TRAFFIC CONTROL AND STAGING AREA

Contractor shall include all costs associated with vehicular and pedestrian traffic control and maintenance during the project. Contractor shall be responsible for providing a staging area. The location of this area must be approved by the City Manager or designee. The Contractor will be required to control the area including any additional fencing or barricades and Contractor will be responsible for the restoration of this and all other staging areas provided by the City.

ASSIGNMENT AND TRANSFER OF CONTRACT

The Contractor shall not assign or transfer this Agreement or any part thereof or any interest therein without consent in writing of the City and the Contractor's Surety, and any such assignment or transfer without such written consent shall be null and void.

SUBCONTRACTS

The Contractor shall not subcontract this Agreement or any part thereof or any interest therein without consent in writing of the City and the Contractor's Surety. Any Subcontractor approved by the City will be subject to the same standards and qualifications as stated in this Contract.

PERFORMANCE PAYMENT BOND

Not required for this contract.

LIQUIDATED DAMAGES

If the work embraced by this Contract is not completed on or before the date set for completion or any extension thereof, the actual damages for the delay will be impossible to determine and in lieu thereof, the Contractor shall pay to the City fixed, agreed, and liquidated damages in the amount of either Five-Hundred Dollars ($500) per day for each calendar day of delay until the work is satisfactorily completed.

PAYMENT

Payment shall be made to the Contractor for work performed under this Contract for the quantities of work as determined in accordance with Payments for Work Completed and Payments Withheld of this Contract. Payment for extra work will be made in accordance with the Changes in Work, Contract Amount, and Contract Time sections below.

CHANGES IN THE WORK

Without invalidating the Contract, the City may, at any time or from time to time, order additions, deletions or revisions in the work authorized by written Change Orders or directives. Upon receipt of a Change Order, the Contractor will proceed with the work involved. All such work shall be executed under the applicable conditions of the Contract documents. If any Change Order causes an increase or decrease in the Contract Amount or any extension or shortening of the Contract Time, an equitable adjustment will be made.

Additional Work performed by the Contractor without authorization of a Change Order will not entitle them to an increase in the Contract Amount or any extension of the Contract Time, except in the case of an emergency (subject to approval by City Manager or designee).

It is the Contractor's responsibility to notify their Surety of any changes affecting the general scope of the Work or change of the Contract Amount and the amount of the applicable bonds shall be adjusted accordingly, and an amended bond document furnished to the City. In the event the City directs the Contractor to make a change in the Work, and if the City and the Contractor do not arrive at a mutually acceptable increase or decrease in the Contract Amount, the contractor shall not use any such lack of mutual acceptance as a basis or cause to stop or otherwise delay the progress or the execution and completion of any of the work ordered, directed or required pursuant to the Contract Documents.

If the Contractor believes an event or situation has occurred which justifies a change in the Contract Amount or Contract Time, he shall deliver a written notice to the City Manager or designee. Each such written notice shall be delivered promptly and no later than fifteen (15) business days after the Contractor first discovered the occurrence. The Contractor shall be deemed to have waived the right to collect any and all costs incurred more than fifteen (15) business days prior to the date of delivery of the written notice and shall be deemed to have waived the right to seek an extension of the Contract Time with respect to any delay in the Progress Schedule which accrued more than fifteen (15) business days prior to the date of delivery of the written notice.

Any such notice shall include sufficient detail to explain the basis of entitlement to a claim for an adjustment to the Contract Amount of Contract Time. When requested by the City Manager or designee, the Contractor shall furnish any additional information and details as may be required to determine the facts or allegations involved, which shall be provided within fifteen (15) business days of the request unless a longer time period is allowed by the City Manager or designee.

The Contractor shall prepare bids detailing proposed adjustments to Contract Amount and/or Contract Time and submit them to the City Manager or designee within fifteen (15) business days of the City's issuance of a proposed Change Order or the Contractor's submitting a written notice of a change or claim for an adjustment to the Contract Amount or Contract Time. Contractor's bids shall be irrevocable for a period of at least sixty (60) business days after receipt by the City. Any delay in the submittal of a complete, adequate and acceptable bid will not justify an increase in Contract Amount or Contract Time. Contractor agrees that it shall give the City access to any and all of Contractor's and Subcontractors' books, records and other materials relating to proposed Change Orders and other claims for adjustment to Contract Amount or Contract Time.

CHANGE OF CONTRACT AMOUNT

The Contract Amount constitutes the total compensation payable to the Contractor for performing the Work. All duties, responsibilities and obligations assigned to or undertaken by the Contractor shall be at his expense without change in the Contract Amount. The Contract Amount may only be changed by written Change Order issued by the City. Any claim for an increase in the Contract Amount shall be in writing and delivered to the City Manager or designee within fifteen (15) business days of the occurrence of the event giving rise to the claim.

All claims for adjustment in the Contract Amount shall be determined by the City Manager or designee. However, no claim for an adjustment to the Contract Amount will be considered for unforeseeable causes that were beyond the fault or negligence of the Contractor or his Subcontractors or supplier such as acts of God, floods, riots, etc. This restriction does not restrict submission of claims for additional Contract Time due to events of this nature. Any change in the Contract Amount shall be incorporated in a Change Order.

Contractor bids or claims shall cover all aspects of the Work involved and shall be fully documented and itemized as to all costs, quantities and charges for overhead and profit. Amounts for Subcontractors or Suppliers at any tier shall be similarly supported. When determining Subcontractors' costs, the methods to

be used shall be those used for the Contractor's costs, except that the term "Subcontractor" shall replace the term "Contractor," context permitting.

Changes in Contract Amount for extensions in Contract Time shall exclude costs that are unaffected or do not relate to the extension in Contract Time, such as: (a) operating costs of construction equipment assigned to the Work on a continuing basis, (b) operating costs and owned/rental costs of construction equipment (crane used for specific lifts, concrete pump used for specific pours, etc.), and (c) fully paid site facilities, tools, etc.

The value of any Work covered by a Change Order or of any claim for an increase or decrease in the Contract Amount where the Work involved is covered by unit prices contained in the Contract Documents shall be determined by application of unit prices to the quantities of the items involved. If the quantities originally contemplated are so changed in a proposed Change Order, that application of the Unit Prices to the quantities proposed will cause substantial inequity to the City or the Contractor, the applicable unit price(s) shall be equitably adjusted by mutual agreement.

If the value of work covered by a Change Order cannot be established or mutually agreed to utilizing previously established unit rates, the value shall be determined by the City on the basis of an estimate of the out-of-pocket cost and percentages that are acceptable to the City for overhead and profit. The out-of-pocket cost shall only include those direct costs which are needed to perform the work such as labor (including payroll taxes, fringe benefits, labor burden and workers' insurance), materials, equipment, and other incidental out-of-pocket construction costs directly involved in the work, including but not limited to small tools, expendables and material costs but shall not include project management or project supervisory costs unless the Change Order includes an increase in the Contract time.

In such case, the Contractor will submit in the form prescribed by the City an itemized cost breakdown together with supporting data.

The amount of credit to be allowed by the Contractor to the City for any such change which results in a net decrease in cost, will be the amount of the actual net decrease as determined by the City. When both additions and credits are involved in any one change, the combined overhead and profit shall be figured on the basis of the net increase, if any.

To be eligible for consideration, the Contractor's written claim for a change in the Contract price, including claim(s) from sub-contractors, shall include an itemized cost breakdown with supporting data as described below:

A. For labor: Provide written documentation from the Contractor and Subcontractors or others as appropriate in the form of a detailed breakdown by each labor classification involved indicating the number of hours of Work involved and the hourly payroll rate applicable to each to substantiate the basis and amount of the direct labor cost. The direct labor cost may be increased to provide an allowance for indirect payroll costs (labor burden), such as payroll taxes, fringe benefits, and workers insurance after all premium discounts, rebates and other appropriate reductions have been taken.

B. For material, supplies, equipment, furnishings, etc., to be installed or included in the Work: Provide written documentation from the Contractor and Subcontractors, suppliers, etc., to substantiate the basis and amount of the various cost items involved. Material costs shall reflect the Contractor's reasonably anticipated net actual cost after consideration of trade discounts and volume rebates.

C. For construction equipment: Provide written documentation in the form of a detailed breakdown by each construction equipment category, indicating the applicable unit rates (i.e., dollar amount per hour, dollar amount per day etc.,) and the number of hours, days, etc. to substantiate the basis and amount of the construction equipment out-of-pocket costs.

CHANGE OF CONTRACT TIME

The Contract Time may only be changed by written Change Order. Any claim for an extension in the Contract Time shall be in writing and include an analysis of the Progress Schedule as further described in the Specifications and shall be delivered to the City Manager or designee within fifteen (15) business days of the occurrence of the event giving rise to the claim. All claims for adjustment in the Contract Time shall be determined by the City Manager or designee. Any change in the Contract Time resulting from any such claim shall be incorporated in a Change Order. The Contract Time may be extended for an amount equal to time lost due to unforeseeable causes beyond the control of the Contractor (and his Subcontractors and Suppliers) if he makes a claim therefrom. Such delays shall include, but not be restricted to, acts or neglect by any separate Contractor employed by the City; fires; floods; labor disputes; epidemics; or acts of God.

All time limits stated in the Contract Documents are of the essence to the Contract. The stated time limits are agreed to be adequate to complete the work, including the procurement, manufacture and delivery of all material and equipment required, and account for any and all potential impact, delays, disruptions and costs that may be expected.

CITY'S RIGHT TO DIRECT PURCHASE

The City has reserved the right to purchase certain items and materials for this project directly in an effort to save applicable sales tax in compliance with Florida Law.

The City will issue purchase orders directly to the vendors supplying the equipment being directly purchased by the City for this project. Each Purchase Order will be accompanied by the City's Certificate of Exemption and a Certificate of Entitlement. All direct purchase vendor invoices will be issued to the City of St. Pete Beach, and the City will issue payment to each direct purchase vendor from City funds. The City will take title to the equipment at time of delivery from the vendor and will issue a separate Certificate of Entitlement for each purchase order.

The Contractor shall assist the City with receipt of materials furnished by the City in accordance with these Special Provisions including, but not limited to, verifying correct quantities, verifying documents of orders in a timely manner, providing and obtaining all warranties and guarantees required by the Contract Documents, assist with inspection of the goods at the time of delivery and notify the City immediately of any deficiencies noted. It is understood that the owner assumes the risk of damage or loss during the time that the building materials are physically stored at the job site prior to their installation or incorporation into the project. The Contractor shall coordinate with the City regarding the delivery schedules, sequence of delivery, loading orientation, and other arrangements normally required by the Contractor for the particular material furnished.

As City Furnished Materials are delivered to the job site and accepted by the City, the City shall notify the Contractor who will assist the City to visually inspect all shipments from the suppliers. The City will approve the vendor's invoice for material delivered upon adequate inspection and recommendation of the Contractor. The City shall assure that each delivery of City Furnished Materials is accompanied by documentation adequate to identify the Purchase Order against which the purchase is made and Contract Documents including but not limited to Contract, Plans, Specifications, and approved Shop Drawings. This documentation may consist of a delivery ticket, bill of lading and an invoice from the supplier conforming

to the Purchase Order together with such additional information as the City may deem necessary.

PAYMENTS FOR WORK COMPLETED

Partial payments will be made as the work progresses (if applicable) at the end of each calendar month, or as soon thereafter as practicable on estimates made by the City Manager or designee and as approved by the City, provided that the Contractor is performing the overall job in a diligent manner. In making partial payments, there shall be retained five percent (5%) on the amount of each estimate until final completion and acceptance of all work covered by the Contract. Upon completion and acceptance of the work, the City Manager or designee shall issue a certificate that the work has been completed and accepted by them under the conditions of the Contract and shall make and approve the final estimate of the work. The entire balance found to be due the Contractor, including that retained by the City, should be paid to the Contractor. Such payment shall be conditioned, however, upon the submission by the Contractor of evidence satisfactory to the City that all claims for labor, material, and any other outstanding indebtedness in connection with the Contract have been paid. Such payment shall also be conditioned upon approval and acceptance of the construction and improvements by the City.

If after the work has been substantially completed, full completion thereof is materially delayed through no fault of the Contractor and the City Manager or designee so certifies, the City shall upon the Certificate of the City Manager or designee, and without terminating the Contract make payment for the balance due for that portion of the work fully completed and accepted. Such payment shall be made under the terms and conditions governing final payment, except that it shall not constitute a waiver of claim. If such delay occurs and payment is made under this clause, the Contractor shall nevertheless be prepared to complete the work in a timely manner upon the remedy or removal of such delay, and shall be bound under this Contract for the completion of such work unless this Contract is otherwise terminated. All payments will be made in accordance with the Local Government Prompt Payment Act, Chapter 218, Florida Statutes.

PAYMENTS WITHHELD

The City Manager or designee may withhold, or, on account of subsequently discovered evidence, nullify the whole or part of any estimate to such extent as may be necessary to protect the City from loss on account of:

a) Defective work not remedied

b) Claims and/or liens filed or reasonable evidence indicating probable filing of claims

c) Failure of the Contractor to make payments properly to Subcontractors or for material or labor

d) A reasonable doubt that the Contract can be completed for the balance then unpaid

e) Damage to another Contractor

f) Failure of the Contractor to keep their work progressing in accordance with their time schedule

FINAL PAYMENTS

Upon the completion and acceptance of the work, the City Manager or designee shall issue a certificate that designates that the whole work provided for in this Contract has been completed and accepted by him under the conditions and the terms thereof and shall make the final estimate of the work. After issuance of the certificate, the entire balance found to be due the Contractor, including said retained percentage by the City in accordance with existing state laws as may be retained lawfully by said City, shall pay excepting such

sums to the Contractor.

Before the approval of the final payment, the Contractor shall submit evidence satisfactory to the City that states that all payrolls, materials, bills and outstanding indebtedness in connection with this Contract have been paid.

LIENS

If at any time there shall be evidence of any lien or claim for which the City might become liable and which is chargeable to the Contractor, the City shall have the right to retain out of any payment then due or thereafter to become due, an amount sufficient for complete indemnification against such lien or claim. In the event the City has already paid to the Contractor all sums due under this contract or the balance remaining unpaid is insufficient to protect the City, the Contractor and his Surety shall be liable to the City for any loss so sustained.

RESPONSIBILITY OF THE CITY MANAGER OR DESIGNEE

The term "City Manager or designee" wherever used in the Contract shall be the City of St. Pete Beach or its duly authorized representative. Notices of any change in the City Manager or designee shall be given in writing by the City to the Contractor. The City Manager or designee shall have full authority to interpret the Plans and Specifications and shall determine the amount, quality, and acceptance of the work and supplies to be paid for under the Contract and every question relative to the fulfillment of the terms and provisions therein. It shall be the duty of the City Manager or designee to enforce the Plans and Specifications in a fair and unbiased manner. If a variation from any requirements is allowed the City Manager or designee shall grant the same in writing with the reasons for his action outlined, and such action will not invalidate or change the Contract in any other manner.

INTENT OF PLANS AND SPECIFICATIONS

The Contractor shall keep on the job a copy of the Plans and Specifications and shall at any time give the City Manager or designee access thereto. Anything mentioned in the Specifications and not shown on the Plans or shown on the Plans and not mentioned in the Specifications, shall be of like effect as if shown or mentioned in both. The Contractor shall not take advantage of any errors, discrepancies or omissions that may exist in the Plans and Specifications but shall immediately call them to the attention of the City Manager or designee whose interpretation or correction thereof shall be conclusive. Should a conflict occur between the General Specifications and any Supplemental Specifications and/or Plans, the latter shall govern.

LICENSES AND PERMITS

The Contractor shall obtain and pay for all necessary City licenses and work permits and shall faithfully comply with all laws, ordinances and regulations, (Federal, State or local) which may be applicable to the operations to be conducted hereunder, except for those permits obtained by the City. Notwithstanding the provisions above, the contractor is responsible for non-compliance of all permit requirements, including all fines resulting from Contractor's non-compliance of said requirements.

Chapter II, Section II-4, "Registration of Licenses Obtained From Other Municipalities:" "Persons, partnerships, corporations, or other business entities doing business with the City who are not required to obtain a City occupational license, but who must have either a State or County or Municipal occupational license from another municipality, shall register such occupational license with St. Pete Beach Community Development Department. The City may charge a fee for such registration." The Contractor shall be

responsible for obtaining all City, County, State and Federal permits required by those government agencies and must provide documentation of receipt of those permits prior to project commencement. This shall include a notice to commence work letter and the applicable fee, if required. Any sub-contractor hired by the contractor awarded the project, MUST also register their license with the City.

SUPERINTENDENCE

The Contractor shall constantly superintend all the work embraced in this Contract in person or by a responsible agent who shall have in writing, full authority to act for them and to carry out all the instructions given by the City Manager or designee.

LABOR PROVISIONS

The Contractor and his Subcontractors shall discharge, whenever ordered to do so by the City Manager or designee, any employee who is disorderly or whose conduct in the opinion of the City Manager or designee is detrimental to the prosecution of the work. No person whose age or physical condition is such as to make this employment dangerous to his/her health and safety or to the health and safety of others shall be employed on the work, and in no event shall any persons under the age of sixteen (16) years be employed.

INSURANCE

The Contractor shall procure and maintain at his/her own expense, during the life of the Contract, liability insurance as hereinafter specified. All such insurance shall be subject to the approval of the City for adequacy of protection and shall include a provision preventing cancellation without twenty (20) business days prior notice to the City in writing. The City shall be included as an additional insured on all liability insurance. The liability insurance required is as follows: Contractor's General Public Liability and Property Damage Insurance issued to the Contractor and protecting the Contractor from all claims for personal injury, including death, and all claims for destruction of or damage to property, arising out of or in connection with any operations under this Contract, whether such operations be by the Contractor or by any Subcontractor hired by the Contractor or anyone directly or indirectly employed by the Contractor or hired by the Contractor.

The successful Contractor shall supply and maintain insurance which defends, indemnifies and holds harmless the City of St. Pete Beach, its officers, employees and agents from and against any and all liability, damage claims, demands, costs, judgments, fees, attorney's fees or loss arising directly out of acts or omissions hereunder by the Contractor or third party under the direction or control of the Contractor. Such general and excess liability coverage shall be primary to any other coverage carried by the City of St Pete Beach. Contractor must furnish the City with Certificate of Insurance prior to commencement of work. An approved Certificate of Insurance furnished by the Contractor's carrier to guarantee the Contractor being insured with the City of St Pete Beach must be named as a certificate holder for this contract. The following minimum coverage:

- Commercial General Liability Insurance $1,000,000.00.
- Comprehensive General Liability Insurance of $1,000,000.00 each occurrence.
- Personal Injury for $1,000,000.00 each occurrence.
- Automobile Liability $1,000,000.00.
- General Workers Compensation Insurance as required by Florida law.
- Longshore Harbor Workers Compensation Insurance

PROTECTION OF WORK AND PROPERTY

The Contractor shall continuously maintain adequate protection of all their work and materials from damage or theft and shall protect the City's property and all adjacent property from injury or loss arising in connection with activities under their Contract. The Contractor shall make good any such damage, injury, or loss, except such as may be caused by agents or employees of the City.

The Contractor shall take, use, provide, and maintain all necessary precautions, safeguards, and protection to prevent accidents, or injury to persons or property on, about, or adjacent to the site of the work. Should the situation arise that physical security is needed the Contractor will provide security on off days and holidays. The Contractor shall be responsible for all charges incurred with such action.

The Contractor shall post danger signs warning against any hazards created by the work being done under their Contract. They shall designate a responsible member of their organization on the work, whose duty shall be the prevention of accidents, and the name of the person so designated shall be reported to the City Manager or designee and City in writing. In an emergency affecting the safety of life, or of the work or adjoining property, the Contractor, without special instruction or authorization from the City Manager or designee, or City, is hereby permitted to act, at their own discretion, to prevent such threatened loss or injury, and they must take such action if so instructed or authorized by the City Manager or designee. The Contractor shall also protect adjacent property as required by law.

PARKING

The Contractor shall arrange with City Manager or designee for temporary parking areas to accommodate construction personnel and construction equipment. Note that limited parking spaces are available in the City of St. Pete Beach. The Contractor will be asked to coordinate with the City's representative on site on a regular basis to minimize the impact on residents and visitors.

TRANSPORTATION, HANDLING AND STORAGE

The Contractor shall transport, handle, protect and store products in accordance with manufacturer's instructions and all environmental regulatory agencies.

VEHICLES

Business vehicles shall be identified on both sides with the name of the company.

ENVIRONMENTAL PROTECTION

It shall be the Contractor's responsibility to implement construction methods, best management practices, and erosion control methods that avoid water pollution as required by the State of Florida Department of Environmental Protection (FDEP), City of St. Pete Beach, and Pinellas County. Any Contractors in violation of the City of St. Pete Beach Regulations, Pinellas County Regulations, Florida Department of Environmental Protection Regulations, or any other regulatory agency regulations shall be the sole responsibility of the Contractor. The Contractor shall hold harmless the City of St. Pete Beach and the City Manager or designee from any fines and litigation resulting from the Contractor's actions. The Contractor shall pay all attorneys' fees, fines, penalties and any other such expenses resulting from the Contractor's actions. The Contractor shall provide all necessary measures to prevent any materials whatsoever from entering the waterway except for those materials, which are shown, on the plans as completed structures. The Contractor shall provide MSDS sheets to the City Manager or designee on all applicable materials before applying those materials. The Contractor shall secure the necessary education, certifications,

licenses and permits required by state and local agencies to operate and manage a construction site, including but not limited to, FDEP requirements related to Coastal Construction Control Line. The Contractor shall abide by all rules and regulations set forth and required by the City of St. Pete Beach's MS4 NPDES Permit.

TIMELY DEMAND FOR STAKES AND INSTRUCTIONS

The Contractor shall provide reasonable and necessary materials, opportunities, and assistance for setting stakes and making measurements, including the furnishing of a rodman, or a chainman at intermittent times during the construction period. They shall not proceed until they have received such stakes and instructions as may be necessary as the work progresses. The work shall be done in strict conformity with such stakes and instructions. The Contractor shall carefully preserve benchmarks, reference points and stakes, and in case of willful or careless destruction, they will be charged with the resulting expense and shall be responsible for any mistakes that may be caused by their unnecessary loss or disturbance.

WORKMANSHIP

The Contractor acknowledges that they have satisfied themselves as to the nature and location of the work; the general and local conditions including but not restricted to those bearing upon transportation, disposal, handling and storage of materials; availability of labor, water, electric power, roads; and uncertainties of weather, surface conditions, subsurface conditions, tides or similar physical conditions at the site, the character of equipment and facilities required to prosecute the work. Any failure by the Contractor to acquaint themselves with any aspect of the work or with any of the applicable conditions shall not relieve the Contractor from the responsibility to successfully perform the work under the Contract Documents, nor shall it be considered the basis for any claim for additional time or compensation.

UTILITIES

The Contractor shall anticipate all underground obstructions such as water lines, gas lines, sewer lines, utility lines, or any other public or private facilities and debris. In all cases where existing utility lines may be interfered with by the work, the Contractor shall give a minimum of thirty-six (36) hours' notice to the owners of such utilities, to permit them to relocate the lines prior to construction. No extra payment shall be allowed for the removal, replacement, repair or possible increased cost caused by underground obstructions. The location of existing structures and utilities provided in the plans are approximate only. Any damage to existing structures to remain or work of any kind shall be repaired or restored promptly by, and at the expense of the Contractor.

The Contractor shall at all times protect all desirable trees, plants, curbs, sidewalks, irrigation components, and structures not requiring removal to accomplish the work, whether or not they are shown on the plans. The Contractor must contact the City to obtain tree removal permits for the removal of any tree not identified for removal in the Project Plans.

In matters of restoration, all materials, construction, and workmanship shall be acceptable to, and approved by the City of St. Pete Beach and the City Manager or designee. No changes in size, shape, configuration, location, materials, or construction shall be made without prior written authorization from the City Manager or designee. Any demolition debris and other debris shall be hauled offsite and properly disposed of by the Contractor and shall be inclusive to the prices as stated in the BID SCHEDULE, unless otherwise stipulated as part of the project to remain.

No interruption of ingress and egress to private property shall be made unless the Contractor has made prior arrangements acceptable to the owner of the affected property. The City Manager or designee shall

notify affected residents/property owners of impending activity or inconvenience via door hanger.

The Contractor shall provide all traffic control devices utilized during construction and meet the requirements set forth in the Florida State Department of Transportation "Manual on Traffic Control and Safe Practices for Street and Highway Construction, Maintenance, and Utility Operations."

CLEANING UP

Upon completion or termination of the work the Contractor shall, as directed by the City Manager or designee, remove from the vicinity of the work all equipment and temporary structures, waste materials and rubbish resulting from his operations, leaving the premises in a neat and presentable condition. All debris generated by the Contractor will be removed before leaving the area. All areas will be raked to remove smaller debris. All surrounding sidewalks, parking lots and roadways will be cleared of any dust or debris generated by the Contractor. In the event of their failure to do so, the City at the expense of the Contractor may do the same, and their Surety shall be responsible.

DEFECTIVE WORK OR MATERIAL

The Contractor shall promptly remove from the premises all work and materials condemned by the City Manager or designee as failing to conform to the Contract, whether incorporated or not, and the Contractor shall promptly replace and re-execute his own work in accordance with the Contract and without expense to the City and shall bear the expense of making good all work of other Contractors destroyed or damaged by such removal or replacement.

If the Contractor does not remove such condemned work or materials within a reasonable time after notice, the City may remove them and store the materials at the expense of the Contractor. If the Contractor does not pay the expense of such removal within ten (10) business days' time thereafter, the City may, upon thirty (30) business days written notice sell such materials at auction or at private sale and shall account for the net proceeds thereof after deducting all the costs and expenses that should have been borne by the Contractor.

DISPUTE RESOLUTION

The Contract shall be construed under Florida law. The parties agree that all controversies, claims and other matters in question between the parties arising out of or relating to this Contract or its breach shall be resolved through mediation. Upon notice of any party to the Contract of a dispute, question or controversy, the parties shall agree to the appointment of a qualified mediator. A qualified mediator is a person who has received at least forty (40) hours of mediation training and has actual experience as a mediator in resolving contract disputes. If the dispute, question or controversy is not resolved through mediation within sixty (60) business days of a notice of the dispute between the parties, the City reserves the right to seek resolution through court action.

INDEMNIFICATION

In consideration of the payment of ten dollars ($10.00) as part of the above purchase price, Contractor shall indemnify, defend, and hold harmless the City, its officers and employees, from liabilities, damages, losses and costs, including but not limited to, reasonable attorney's fees, to the extent caused by the negligence, recklessness, or intentional wrongful misconduct of the responding firm and any persons employed or utilized by the responding firm in the performance of the Contract.

GENERAL WARRANTY

Neither the final certificate nor any provision in the Contract Documents nor partial or entire occupancy of the premises by the City shall constitute an acceptance of work not done in accordance with the Contract Documents or relieve the Contractor of liability in respect to any express warranties or responsibility for faulty materials or workmanship. The Contractor shall remedy any defects in the work and pay for any damage to other work resulting therefrom that shall appear within a period of eighteen (18) months from the date of final acceptance of the work, unless a longer period is specified. The City shall give notice of observed defects with reasonable promptness.

LAND OF CITY, USE OF, BY CONTRACTOR

The City shall provide the land upon which the work under this Contract is to be done, and will, so far as is convenient, permit the Contractor to use as much of the land as is required for the erection of temporary construction facilities and storage of materials, together with the right of access to same, but beyond this, the Contractor shall provide, at his/her cost and expense, any additional land required. It will be the responsibility of the Contractor to repair or restore to the satisfaction of the City, at their own expense, any damage to land used for the above stated activities or any other activities approved by the City.

OTHER WORK

Wherever work being done by the City or by other Contractors is contiguous to work covered by this Contract, the respective rights of the various interests involved shall be established by the City Manager or designee to secure the completion of the various portions of the work in general harmony.

OTHER CONTRACTS

The City may award other Contracts. The Contractor shall fully cooperate with such other Contractors and carefully fit his/her own work to that provided under other Contracts, as may be with the performance of work by any other Contractor or City.

COOPERATIVE PURCHASING

Pursuant to their own governing laws and subject to the agreement of the Contractor, governmental entities may make purchases under the terms and conditions contained in the executed Contract, if agreed to by Contractor. Such purchases are independent of the Contract between the City and the Contractor, and the City is not a party to these transactions. Agencies seeking to make purchases under this Contract are required to follow the requirements of Rule 60A-1.045(5), F.A.C.

DELAYS AND EXTENSION OF TIME

If the Contractor should be delayed at any time in the progress of the work by an act or neglect of the City or the City Manager or designee, or of any employee of either, or by any separate Contractor employed by the City, or by changes ordered in the work, or by strike, lockouts, fire, unusual delay in transportation, unavoidable casualties, or any cases beyond the Contractor's control, or by delay authorized by the City Manager or designee, or by any cause which the City Manager or designee shall decide to justify the delay, then the time of completion shall be extended for such reasonable time as the City Manager or designee may decide. No such extension shall be made for a delay that occurs more than five (5) business days before a claim is made in writing to the City Manager or designee. In the case of a continued cause of delay, only

one (1) claim is necessary. This section does not exclude the recovery of damages for delay by either party under other provisions in the Contract Documents.

CITY'S RIGHT TO TAKE OVER THE WORK

If the Contractor shall be adjudged bankrupt, or if they should make a general assignment for the benefit of its creditors, or if a receiver should be appointed to take over their affairs, or if they should fail to prosecute their work with due diligence and carry the work forward in accordance with its' work schedule and the time limits set forth in the Contract Documents, or if they should fail to substantially perform one or more of the provisions of the Contact Documents to be performed by them, the City may serve written notice on the Contractor and the Surety on its' performance bond, stating the City's intention to exercise one of the remedies hereinafter set forth and the grounds upon which the City bases its right to exercise such remedy. In any event, unless the matter complained of is satisfactorily cleared within ten (10) business days after the service of such notice, the City may, without prejudice to any other right or remedy exercise one of such remedies at once; having first obtained a certificate from the City Manager or designee that such sufficient cause exists to justify such action.

The City may terminate the services of the Contractor, which termination shall take effect immediately upon service of notice thereof on the Contractor and their Surety, whereupon the Surety shall have the right to take over and perform the Contract. If the Surety does not commence performance of the Contract within ten (10) ten days after service of the notice of termination, the City may itself take over the work, take possession of and use all materials, tools, equipment, and appliances on the premises and prosecute the work to completion by such means as it shall deem best. In the event of such termination of their service, the Contractor shall not be entitled to any further payment under their Contract until the work is completed and accepted. If the City takes over the work and the unpaid Contract balance exceeds the cost of completing the work, including compensation for damages or expenses incurred by the City through the default of the Contractor, the excess unpaid Contract balance shall be paid to the Contractor. If the City takes over the work and the unpaid Contract balance does not exceed the cost of completing the work, including compensation for damages or expenses incurred by the City through the default of the Contractor, the Contractor and his Surety shall pay the difference to the City. The City Manager or designee shall certify such cost, expenses, and damages.

The City may take control of the work and either make good the deficiencies of the Contractor itself or direct the activities of the Contractor in doing so, employing such additional help as the City deems advisable. In such event, the City shall be entitled to collect from the Contractor and his Surety, or to deduct from any payment then or thereafter due the Contractor, the costs incurred by it through the default of the Contractor, provided the City Manager or designee approves the amount thus charged to the Contractor.

The City may require the Surety on the Contractor's bond to take control of the work at once and see to it that all deficiencies of the Contractor are made good with due diligence. As between the City and the Surety, the entire cost of making good such deficiencies shall be borne by the Surety. If the Surety takes over the work, either upon termination of the services of the Contractor or upon instructions from the City to do so, the provisions of the Contract Documents shall govern in respect to the work done by the Surety, the Surety being substituted for the Contractor as to such provisions, including provisions as to the payment for the work and provisions of this section as to the right of the City to do the work itself or to take control of the work.

RIGHT OF OCCUPANCY

The City shall have the right, if necessary, to take possession of and to use any completed or partially

completed portions of the work, if such use be approved by the City Manager or designee even if the time for completing the entire work or such portions of the work has not expired and even if the work has not been finally accepted. Such possession and use shall not constitute an acceptance of such possession and use if it materially interferes with the Contractor's operations. The City shall also have the right to enter the premises with the Contractor for the purpose of doing work not covered by its Contract.

ACCEPTANCE

Final inspection and acceptance of the work shall be made for the City by the City Manager or designee. Such inspection shall be made as soon as practical after the Contractor has notified the City in writing that the work is ready for such inspection.

WAIVER

It is expressly understood and agreed that any waiver granted by the City Manager or designee of any term, provision, or covenants of the Contract shall not constitute a precedent or breach of the same or any other terms, provisions, or covenants of the Contract. Neither the acceptance of the work by the City nor the payment of all or any part of the sum due the Contractor hereunder shall constitute a waiver by the City of any claim which the City may have against the Contractor or Surety under this Contract or otherwise.

INSPECTION

The City Manager or designee and his representative shall, at all times, have access to the work during its construction and shall be furnished with every reasonable facility for ascertaining that the stock and materials used and employed, and the workmanship, are in accordance with the requirements and intentions of the Plans. All work done and all materials furnished shall be subject to their inspection and approval by the City Manager or his designee. If any work should be covered up without approval or consent of City Manager or designee, it must, if required by the City Manager or designee, be uncovered for examination at the Contractor's expense.

The City Manager or designee may order re-examination of questioned work and if so ordered, the Contractor must uncover the work. If such work were found in accordance with the Contract Documents, the City shall pay the cost of re-examination and replacement. If such work be found not in accordance with the Contract Documents, the Contractor shall pay such costs unless they show that the defect in the work was caused by another Contractor, and in that event, the City shall pay such cost.

The inspection of the work shall not relieve the Contractor of any of their obligations to fulfill their Contract as prescribed, and defective work shall be made good and unsuitable materials shall be rejected, notwithstanding that such defective work and materials have been previously overlooked and accepted on estimates for payment. All work shall be tested to the satisfaction of the City Manager or designee before acceptance.

BID REVIEW AND CONTRACT AWARD

Failure to submit all documents requested at the time of bid may deem the Contractor's bid ineligible for award. The City of St. Pete Beach reserves the right to reject any or all bids or parts of bids or accept any bid or part thereof deemed to be in the best interests to the City of St. Pete Beach. The City shall be the sole final judge of qualifications of the bidder to perform service and reserves the exclusive right to accept or reject any bids as it deems to be in the best interests of the City. The City may waive any informality.

LOCAL, STATE AND FEDERAL COMPLAINCE REQUIREMENTS

The laws of the State of Florida do apply to any purchase made under this Request for Bid. Proposers shall comply with all local, state, and federal directives, orders and laws as applicable to their bid and subsequent contracts include but not limited to Equal Employment Opportunity, Minority Business Enterprise, and OSHA as applicable to this contract.

Compliance with Fla. Stat. 448.095:

- Contractor agrees to comply with all applicable portions of Fla. Stat. 448.095. Contractor must use the U.S. Department of Homeland Security's E-Verify System, hhtps://e-verify.uscis.gov/emp, to verify the employment eligibility of all employees hired on or after January 1, 2021 during the term of this Agreement.

- Subcontractors (i) Contractor shall also require all subcontractors performing work under this Agreement to use the E-Verify system for any employees they may hire during the term of this Agreement. (ii) Subcontractors shall provide Contractor with an affidavit stating the subcontractor does not employ, contract with, or subcontract with an unauthorized alien, as defined by Fla. Stat. 448.095 (iii) Contractor shall provide a copy of such affidavit to the City upon receipt and shall maintain a copy for the duration of the Agreement.

- Contractor must provide evidence of compliance with Fla. Stat. 448.05 by January 1, 2021. Evidence may consist of, but is not limited to, providing notice of Contractor's E-Verify number.

- Failure to comply with this provision is a material breach of the Agreement, and the City may choose to terminate the Agreement at its sole discretion. Contractor may be liable for all costs associated with the City securing the same services, inclusive, but not limited to, higher costs for the same services and rebidding costs (if necessary). Any challenge to termination under this provision must be filed in the Circuit Court no later than 20 calendar days after the date of termination. If this agreement is terminated for a violation of the statue by the Contractor, the Contractor may not be awarded a public agreement for a period of 1 year after date of termination.

RESERVES THE RIGHT

The City reserves the right to accept or reject any and/or all bids, to waive irregularities and technicalities, and to request re-submission. If only one bid is received by the bid date and time listed, the bid may or may not be rejected by the City depending upon bid review and the needs of the City.

The City reserves the right to select a firm with or without additional interviews and may decide to select any of the firms submitting bids. The City reserves the right to award the contract to a responsible proposer submitting a responsible bid, with a resulting negotiated agreement which is most advantageous and in the best interest of the City.

Proposers, bidders, their agents, and associates shall not contact or solicit any City Commission member, City employee, or official regarding this RFB during any phase of the bidding process. Failure to comply with the provision may result in disqualification of the bidder, at the option of the City. Only that individual listed, or an approved designee, as the contact person for this RFB shall be contacted.

SUBMITTAL WITHDRAWAL

After submittals are opened, corrections or modifications to submittals are not permitted, but a responding firm may be permitted to withdraw an erroneous submittal prior to the award by the City Commission, if the following is established:

- That the responding firm acted in good faith in submitting the submittal;
- That in preparing the submittal there was an error of such magnitude that enforcement of the submittal would work severe hardship upon the respondent;
- That the error was not the result of gross negligence or willful inattention on the part of the respondent;
- That the error was discovered and communicated to the City within twenty-four (24) hours of submittal opening, along with a request for permission to withdraw the submittal; or
- The responding firm submits documentation and an explanation of how the error was made.

CONE OF SILENCE

Respondents to this solicitation or persons acting on their behalf may not contact, between the release of the solicitation and the end of the 72-hour period following the agency posting the notice of intended award, excluding Saturdays, Sundays, and state holidays, any employee or officer of the executive or legislative branch concerning any aspect of this solicitation, except in writing to the procurement officer or as provided in the solicitation documents. Violation of this provision may be grounds for rejecting a response.

TERMINATION

The resulting contract may be canceled by the City when:

- Sufficient funds are not available to continue its full and faithful performance of this contract.
- There is sub-standard or non-performance of contract.
- The City wishes to terminate at any time and for any reason, upon giving thirty (30) days prior written notice to the other party.

The resulting contract may be canceled by either party in the event of substantial failure to perform in accordance with the terms by the other party through no fault of the terminating party.

FISCAL NON-FUNDING

If funds for the requested services described herein are not appropriated via the annual budget adoption process, the City reserves the right to cancel this Agreement immediately upon written notice to the vendor.

PROJECT RECORDS

The awarded firm shall maintain auditable records concerning the procurement to account for all receipts and expenditures, and to document compliance with the Contract. These records shall be kept in accordance with generally accepted accounting methods, and the City of St. Pete Beach reserves the right to determine the record-keeping method in the event of non-conformity. These records shall be maintained for three (3) years after final payment has been made and shall be readily available to City personnel with reasonable notice, and to other persons in accordance with the Florida Public Disclosure Statutes. Additionally, the awarded firm shall abide by and comply with Florida Statutes regarding public records. Specifically, the firm shall be aware of the provisions found in Section 119.0701, Florida Statutes.

Upon completion of the project, all reports, studies, recommendations, forms, and other project specific information will need to be submitted in paper and in an electronic file format (.PDF, .JPEG) on CD or USB storage device.

IV. REFERENCES & MINIMUM QUALIFICATIONS

Provide at least three (3) or more professional business references with which you have contracted to provide similar services in the past five (5) years. Include the name of the person, its organization and telephone number, fax number, and e-mail address. Include any governmental agencies, with the same contact and descriptive information for which you have provided similar service within the past five (5) years.

Provide a brief description of the history and capabilities of the firm. Describe the types of projects or services the firm performs/has performed and the dollar value of each. Provide information regarding your firm's ability to complete this project. Demonstrate that the firm's personnel have experience with similar projects.

Identify all unresolved and ongoing claims and disputes against your firm in excess of $500,000. Include any claims against the principals of your firm or any claims your company may have against a third party. Provide a history of litigation, including the outcomes, for the past five (5) years.

The responding firm shall provide a statement of assurance that the firm is not presently in violations of any statutes or regulatory rules that might have an impact on the firm's operations. All applicable laws and regulations of the State of Florida and ordinances and regulations of the City of St. Pete Beach will apply.

Provide the overall bonding capacity for the company and provide a history of any claims against the bidder's previous bonds for the past five (5) years.

The City shall be the sole final judge of qualifications of bidder to perform service and reserves the exclusive right to accept or reject any bid as it deems to be in the best interests of the City. The City reserves the right to make such investigation, as it deems necessary, to determine the ability of any proposer to perform the work or service requested. Failure to comply with the requirements of this section may be grounds for rejecting a response.

V. PUBLIC ENTITY CRIMINAL AFFIDAVIT

SWORN STATEMENT – PUBLIC ENTITY CRIMES

PURSUANT TO § 287.133 (3)(a), FLORIDA STATUTES, ON PUBLIC ENTITY CRIMES
THE FORM MUST BE SIGNED AND SWORN TO IN THE PRESENCE OF A NOTARY PUBLIC OR OTHER OFFICIAL AUTHORIZED TO ADMINISTER OATHS.

1. This sworn statement is submitted to: City of St. Pete Beach

by: James "Paul" Overby
(Print individual's name and title)

for: Dive-Tech International, Inc.
(Print name of entity submitting sworn statement)

at: Post Office Box 3177 Pinellas Park , FL 33780
(Business address)

and (if applicable), its Federal Employer Identification Number (FEIN):

59-3499327
(FEIN)

or, if the entity has no FEIN, include the Social Security Number:

N/A
(SSN)

by the individual signing this sworn statement:

(Signature)

2. I understand that a "public entity crime" as defined in § 287.133 (1)(g), Fla. Stat., means a violation of any State or Federal law by a person with respect to and directly related to the transaction of business with any public entity or with an agency or political subdivision of any other state or of the United States including, but not limited to, any bid or contract for goods or services, any lease for real property, or any contract for the construction or repair of a public building or public work, involving antitrust, fraud, theft, bribery, collusion, racketeering, conspiracy, or material misrepresentation.

3. I understand that "convicted" or "conviction" as defined in § 287.133 (1)(b), Fla. Stat., means a finding of guilt or a conviction of public entity crime with or without an adjudication of guilt in any Federal or State trial court of record relating to charges brought by indictment or information after July 1, 1989, as a result of a jury verdict, non-jury trial, or entry of a plea of guilty or nolo contendere.

4. I understand that an "affiliate" as defined in § 287.133 (1)(a), Fla. Stat., means:
   a. A predecessor or successor of a person convicted of a public entity crime or
   b. An entity under the control of any natural person who is active in the management of the entity and who has been convicted of a public entity crime. The term "affiliate" includes those officers, directors, executives, partners, shareholders, employees, members, and agents who are active in the management of an affiliate. The ownership by one (1) person of shares constituting a controlling interest in another person or a pooling of equipment or income among persons when not for fair market value under the arm's length agreement, shall be a prima facie case that one (1) person controls another person. A person who

knowingly enters into a joint venture with a person who has been convicted of a public crime in Florida during the preceding thirty-six (36) months shall be considered an affiliate.

5. I understand that a "person" as defined in Section 287.133 (1)(e), Fla. Stat., means any natural person or any entity organized under the laws of any state or of the United States with the legal power to enter into a binding contract and which bids or applies to bid on contracts let by a public entity, or which otherwise transacts or applies to transact business with a public entity. The term "person" includes those officers, directors, executives, partners, shareholders, employees, members, and agents who are active in management of an entity.

6. Based on information and belief, the **statement which I have marked below is true** in relation to the entity submitting this sworn statement (indicate which statement applies).

☒ Neither the entity submitting this sworn statement, nor any of its officers, directors, executives, partners, shareholders, employees, members, or agents who are active in the management of the entity nor any affiliate of the entity has been charged with and convicted of a public entity crime subsequent to July 1, 1989.

☐ The entity submitting this sworn statement or one (1) or more of its officers, directors, executives, partners, shareholders, employees, members, or agents who are active in the management of the entity or an affiliate of the entity has been charged with and convicted of a public entity crime subsequent to July 1, 1989.

☐ The entity submitting this sworn statement or one (1) or more of its officers, directors, executives, partners, shareholders, employees, members, or agents who are active in the management of the entity or an affiliate of the entity has been charged with and convicted of a public entity crime subsequent to July 1, 1989. However, there has been a subsequent proceeding before a Hearing Office of the State of Florida, Division of Administrative Hearings and the Final Order entered by the Hearing Officer determined that it was not in the public interest to place the entity submitting this sworn statement on the convicted vendor list (attach a copy of the final order).

I UNDERSTAND THAT THE SUBMISSION OF THIS FORM TO THE CONTRACTING OFFICE FOR THE PUBLIC ENTITY IDENTIFIED IN PARAGRAPH 1 ABOVE IS FOR THE PUBLIC ENTITY ONLY AND THAT THIS FORM IS VALID THROUGH DECEMBER 31 OF THE CALENDAR YEAR IN WHICH IT IS FILED. I ALSO UNDERSTAND THAT I AM REQUIRED TO INFORM THE PUBLIC ENTITY PRIOR TO ENTERING INTO A CONTRACT IN EXCESS OF THE THRESHOLD AMOUNT PROVIDED IN SECTION 287.017, FLORIDA STATUTES, FOR CATEGORY TWO OF ANY CHANGE IN THE INFORMATION CONTAINED IN THIS FORM.

STATE OF FLORIDA
COUNTY OF Pinellas

The foregoing instrument was sworn to (or affirmed), subscribed, and acknowledged before me **by means of ☒ physical presence or ☐ online notarization**, this 6th day of April, 2026, by James Paul Orerby, who is personally known to me or has produced Drivers license as identification.

(SEAL)

KRISTINE D. TAYLOR
Commission # HH 581075
Expires September 2, 2028

Notary Public – State of Florida

Kristine D. Taylor
(Print, Type, Stamp, or Commissioned Name of Notary Public)

VI. NON-COLLUSION AFFADAVIT

STATE OF Florida

COUNTY OF Pinellas

I state that I James "Paul" Overby (Name and Title) of Dive-Tech International, Inc. (Name of Firm), am authorized to make this affidavit on behalf of my firm and its owner, directors and officers. I am the person responsible in my firm for the price(s) and amount(s) of this Response, and the preparation of the Response. I state that:

1. The price(s) and amount(s) of this Response have been arrived at independently and without consultation, communication or agreement with any other Provider, potential provider, Proposal, or potential Proposal.

2. Neither the price(s) nor the amount(s) of this Response, and neither the approximate price(s) nor approximate amount(s) of this Response, have been disclosed to any other firm or person who is a Provider, potential Provider, Proposal, or potential Proposal, and they will not be disclosed before Proposal opening.

3. No attempt has been made or will be made to induce any firm or persons to refrain from submitting a Response for this contract, or to submit a price(s) higher that the prices in this Response, or to submit any intentionally high or noncompetitive price(s) or other form of complementary Response.

4. The Response of my firm is made in good faith and not pursuant to any agreement or discussion with, or inducement from, any firm or person to submit a complementary or other noncompetitive Response.

5. Dive-Tech International, Inc., its affiliates, subsidiaries, officers, director, and employees (Name of Firm) are not currently under investigation, by any governmental agency and have not in the last three years been convicted or found liable for any act prohibited by State or Federal law in any jurisdiction, involving conspiracy or collusion with respect to Proposal, on any public contract, except as follows:

I state that I and the named firm understand and acknowledge that the above representations are material and important, and will be relied on by the State of Florida for which this Response is submitted. I understand and my firm understands that any misstatement in this affidavit is, and shall be treated as, fraudulent concealment from the State of Florida of the true facts relating to the submission of responses for this contract.

Name of Organization: Dive-Tech International, Inc

Signed By: [signature]

Print Name: James "Paul Overby

The foregoing instrument was sworn to (or affirmed), subscribed, and acknowledged before me by means of ☒ physical presence or ☐ online notarization, this 6th day of April, 2026, by James Paul Overby, who is personally known to me or has produced Drivers license as identification.

(SEAL)

KRISTINE D. TAYLOR
Commission # HH 581075
Expires September 2, 2028

[signature]
Notary Public – State of Florida

Kristine D. Taylor
(Print, Type, Stamp, or Commissioned Name of Notary Public)

VII. SPECIFICATIONS

No additional information other than what has been provided under "Scope of Work"

6200 80th Avenue North
Pinellas Park, FL 33781

DIVE-TECH INTERNATIONAL, INC.

Telephone: 727-541-1102
Email: dive-tech@att.net

REFERENCES & MINIMUM REQUIREMENTS

Organization	Contact	Description
Moffatt & Nichol Attention: 501 Kennedy Blvd. Suite 1910 Tampa, FL 33602	Mr. Isaac Canner Telephone: (813) 981-5187 icanner@MoffattNichol.com	Engineering Evaluations
Ferrovial Services, Inc. 2245 White Field Industrial Way Sarasota, FL 34243	Mr. Russell Hammonds Telephone: (727) 946-6179 rhammonds@wwebber.com	Bridge Repairs Steel and Concrete
Structural Preservation Systems, LLC 9735 International Court North St. Petersburg, FL 33716	Mr. Steve Bouwer Telephone: (847) 346-2952 sbouwer@structural.net	Underwater Welding, Engineering Evaluation
Tampa Electric Company Peoples Gas System 1800 9th Avenue North St. Petersburg, FL 33713	Mr. Willie Sands Telephone: 813-917-2917 wcsands@tecoenergy.com	Locate, Inspect, and Repair Gas Lines
Pinellas Park Water Management District 6460 35th Street North Pinellas Park, FL 33781-6221	Mr. Randal Roberts Telephone: 727-528-8022 Randy@ppwmd.com	Infrastructure Repairs

Response's to References & Minimal Requirements

Paragraph 3:
There are no claims resolved or ongoing against Dive-Tech International, Inc.

Paragraph 4:
This statement is an assurance that Dive-Tech International, Inc. is not in any violation of any statues or regulatory rules that might have impact on our operations.

Dive-Tech International, Inc.

Firm Overview

Dive-Tech International, Inc., (DTI), was established in 1980 to service marine construction and inspection needs on the West Coast of Florida. Through the late 1980's and early 1990's DTI expanded into working at power plants for utility work and other types of water borne facilities. Through recruiting, training, and improved resources, DTI has grown into a full service commercial diving and inspection company. DTI is servicing the Eastern, Mid-United States, as well as, the Caribbean.

Dive-Tech International, Inc. has performed underwater inspections of several facilities in and around the Tampa Bay region. Along with basic inspection methods, DTI has advanced into more specialized underwater assessment methods. These methods include underwater ultrasonic testing, concrete coring, underwater video recordings with digital capture, coating inspections, as well as the use of a remotely operated vehicle, (ROV).

With the use of these methods, Dive-Tech International, Inc. has successfully inspected and repaired several facilities in the Tampa Bay area. Some of these inspections include:

- Replaced valve and sluice gates at the David L. Tippin Water Treatment Facility
- Leak inspection of the clear well joints using dye and an underwater video system at the David L. Tippin Water Treatment Facility
- Inspection and evaluation of the Tampa Port Authorities Terminal #6 and Mosaic's Big Bend Terminal
- Provided engineering firm with core samples of the spillway components at the Lake Manatee Dam
- Design and install repairs to a mooring dolphin at Berth 256
- Inspection of multiple SWFMD water control structures

Dive-Tech International, Inc. is a full service commercial diving company, a Certified Small Business Enterprise, (SBE), as well as a member of the Association of Diving Contractors, (ADC), and ISNetworld, (ISN). Additionally, we are fully insured and comply with 29 CFR 1910 Subpart T (O.S.H.A.), 46 CFR 197 Subpart B (U.S.C.G.) as well as DTI's own Safe Practices Manual.

NAICS 561 990
DUNS 147436349

CERTIFICATE OF LIABILITY INSURANCE

DATE (MM/DD/YYYY): 2/20/2026

THIS CERTIFICATE IS ISSUED AS A MATTER OF INFORMATION ONLY AND CONFERS NO RIGHTS UPON THE CERTIFICATE HOLDER. THIS CERTIFICATE DOES NOT AFFIRMATIVELY OR NEGATIVELY AMEND, EXTEND OR ALTER THE COVERAGE AFFORDED BY THE POLICIES BELOW. THIS CERTIFICATE OF INSURANCE DOES NOT CONSTITUTE A CONTRACT BETWEEN THE ISSUING INSURER(S), AUTHORIZED REPRESENTATIVE OR PRODUCER, AND THE CERTIFICATE HOLDER.

IMPORTANT: If the certificate holder is an ADDITIONAL INSURED, the policy(ies) must have ADDITIONAL INSURED provisions or be endorsed. If SUBROGATION IS WAIVED, subject to the terms and conditions of the policy, certain policies may require an endorsement. A statement on this certificate does not confer rights to the certificate holder in lieu of such endorsement(s).

PRODUCER Gulf Coast Underwriters 11073 Countryway Blvd Tampa, FL 33626	**CONTACT NAME:** Scott McEwan		
	PHONE (A/C, No, Ext): 813-864-4GCU	**FAX (A/C, No):** 813-864-4429	
	E-MAIL ADDRESS: anna@gcuins.com		
	INSURER(S) AFFORDING COVERAGE		**NAIC #**
	INSURER A : Underwriters at Lloyds, London		22068
INSURED Dive Tech International, Inc. P.O. Box 3177 Pinellas Park, FL 33780	**INSURER B :** National Specialty Comp		01415
	INSURER C : American Interstate Ins Co		31895
	INSURER D : Underwriters at Lloyds, London		15792
	INSURER E :		
	INSURER F :		

COVERAGES **CERTIFICATE NUMBER:** **REVISION NUMBER:**

THIS IS TO CERTIFY THAT THE POLICIES OF INSURANCE LISTED BELOW HAVE BEEN ISSUED TO THE INSURED NAMED ABOVE FOR THE POLICY PERIOD INDICATED. NOTWITHSTANDING ANY REQUIREMENT, TERM OR CONDITION OF ANY CONTRACT OR OTHER DOCUMENT WITH RESPECT TO WHICH THIS CERTIFICATE MAY BE ISSUED OR MAY PERTAIN, THE INSURANCE AFFORDED BY THE POLICIES DESCRIBED HEREIN IS SUBJECT TO ALL THE TERMS, EXCLUSIONS AND CONDITIONS OF SUCH POLICIES. LIMITS SHOWN MAY HAVE BEEN REDUCED BY PAID CLAIMS.

INSR LTR	TYPE OF INSURANCE	ADDL INSD	SUBR WVD	POLICY NUMBER	POLICY EFF (MM/DD/YYYY)	POLICY EXP (MM/DD/YYYY)	LIMITS		
A	✔ **COMMERCIAL GENERAL LIABILITY** ☐ CLAIMS-MADE ✔ OCCUR ☐ ☐ GEN'L AGGREGATE LIMIT APPLIES PER: ☐ POLICY ☐ PRO-JECT ☐ LOC ☐ OTHER:	Y	Y	F03-MK-123477-26	03/01/2026	03/01/2027	EACH OCCURRENCE	$	1,000,000
							DAMAGE TO RENTED PREMISES (Ea occurrence)	$	50,000
							MED EXP (Any one person)	$	10,000
							PERSONAL & ADV INJURY	$	1,000,000
							GENERAL AGGREGATE	$	2,000,000
							PRODUCTS - COMP/OP AGG	$	1,000,000
							Deductible	$	5,000
B	**AUTOMOBILE LIABILITY** ✔ ANY AUTO ☐ OWNED AUTOS ONLY ☐ SCHEDULED AUTOS ✔ HIRED AUTOS ONLY ✔ NON-OWNED AUTOS ONLY ☐	Y	Y	GMI-0139-05	09/25/2025	09/25/2026	COMBINED SINGLE LIMIT (Ea accident)	$	1,000,000
							BODILY INJURY (Per person)	$	
							BODILY INJURY (Per accident)	$	
							PROPERTY DAMAGE (Per accident)	$	
								$	
D	☐ **UMBRELLA LIAB** ✔ OCCUR ✔ **EXCESS LIAB** ☐ CLAIMS-MADE ☐ DED ☐ RETENTION $	Y	Y	B1586MU123477-26	03/01/2026	03/01/2027	EACH OCCURRENCE	$	4,000,000
							AGGREGATE	$	4,000,000
								$	
C	**WORKERS COMPENSATION AND EMPLOYERS' LIABILITY** Y / N ANYPROPRIETOR/PARTNER/EXECUTIVE OFFICER/MEMBER EXCLUDED? Y **(Mandatory in NH)** If yes, describe under DESCRIPTION OF OPERATIONS below	N / A	Y	AVWCFL3351642026 (Includes USL&H/MEL/ and Jones Act)	03/01/2026	03/01/2027	☐ PER STATUTE ✔ OTH-ER		
							E.L. EACH ACCIDENT	$	1,000,000
							E.L. DISEASE - EA EMPLOYEE	$	1,000,000
							E.L. DISEASE - POLICY LIMIT	$	1,000,000
A	Marine P & I Liability	Y	Y	F03-MK-123477-26	03/01/2026	03/01/2026	P & I		1,000,000
C	MEL		Y	AVWCFL3351642026	03/01/2026	03/01/2027	MEL		1,000,000

DESCRIPTION OF OPERATIONS / LOCATIONS / VEHICLES (ACORD 101, Additional Remarks Schedule, may be attached if more space is required)

Coverage Explanation: GL policy includes Action Over and In-Rem coverages and is primary & non-contributory & includes blanket additional insurance and waiver of subrogation endorsement. Work Comp includes Alternate Employer endorsement. Excess policy includes Waiver of Subrogation, and increases the per occurrence GL and Marine P & I, auto and work comp limit to $5,000,000. Marine P & I also includes blanket waiver of subrogation and blanket additional insured endorsement.

CERTIFICATE HOLDER

City of St Pete Beach
155 Corey Avenue
St Pete Beach, FL 33706

CANCELLATION

SHOULD ANY OF THE ABOVE DESCRIBED POLICIES BE CANCELLED BEFORE THE EXPIRATION DATE THEREOF, NOTICE WILL BE DELIVERED IN ACCORDANCE WITH THE POLICY PROVISIONS.

AUTHORIZED REPRESENTATIVE



© 1988-2015 ACORD CORPORATION. All rights reserved.

AGENCY CUSTOMER ID: DIVET-1

LOC #:

ADDITIONAL REMARKS SCHEDULE

AGENCY		NAMED INSURED
Gulf Coast Underwriters		Dive Tech International, Inc. P.O. Box 3177 Pinellas Park, FL 33780
POLICY NUMBER GMI-0139-00		
CARRIER National Specialty Comp	NAIC CODE 22068	EFFECTIVE DATE: 09/25/2020

ADDITIONAL REMARKS

THIS ADDITIONAL REMARKS FORM IS A SCHEDULE TO ACORD FORM,

FORM NUMBER: _____ **FORM TITLE:** _____

Vehicle Schedule:
2006 Chevy - Silverado 1GCHK23U96F170161
2004 Chevy - Silverado 1GCHC29U54E100485
2008 Toyota - Tundra 5TBBV54108S518332
2001 CHEVY - SILVERADO 1GCHK23U91F162764
2019 Express - Trailer 5GLBE1211KC000511
2019 Express - enclosed Trl 5GLBE1210KC000595
2020 Express - enclosed Trl 5GLBE1218LC000197
2016 Lark Trl - enclosed Trl 5RTBE0819GD051215
1991 Magic Tilt - 2 axle 1M5EMVY24M1033160
1998 Performance - Trl 5HVBU12112L120340
2015 Utility - Trailer 4S9CMUB1506344112
2015 TNT - Trailer 1T9BB2426DT890996
2016 Karavan - 18 Foot 5KTBS1914GF012268
2026 CGT Trailer - 1Z91B3027TP704351

© 2008 ACORD CORPORATION. All rights reserved.
The ACORD name and logo are registered marks of ACORD

ATTACHMENT "B"

DIVE-TECH INTERNATIONAL, INC.
CONTRACTOR OWNED EQUIPMENT RENTAL RATES FOR 2026

Most of the diving equipment used is included in our labor costs: exceptions listed below. The list is comprised of equipment with a purchase value of $ 500.00 or more.

Equipment	Per Day		Equipment	Per Day
Digital Camera	150.00		4000 PSI Water Blaster	150.00
Underwater Video System with Digital Capture	450.00		CP-9 Rotary Rock Drill	100.00
Small Pneumatic Tools	35.00		6" Hydraulic Dredge System	700.00
Small Hand Tools	35.00		6" Hydraulic Sludge Pump (Pump Only)	390.00
Surface Torch	45.00		6" Hose (25')	12.50
Magnetic Drill	45.00		50' Turbidity Barrier	50.00
Underwater Welding Rig	125.00		Jet Pump	125.00
Underwater Burning Rig	125.00		1" Pneumatic Impact	100.00
D. C. Welding Machine	150.00		Radio Detection Equipment	300.00
Underwater Ultrasonic Testing Equipment	325.00		Remotely Operated Vehicle (ROV)	500.00
Hydraulic Unit	250.00		Dive Compressor	50.00
Hydraulic Hose (Per 50' Sections)	15.00		Water Reservoir & Pump	50.00
Hydraulic Grinder	125.00		Lift Barrels	15.00
Hydraulic Cutter Head	150.00		Small Generator	75.00
Hydraulic Drill	150.00		Chiller Unit	150.00
Hydraulic Impact	150.00		Dry Suit (1)	200.00
Hydraulic Core Drill	350.00		Proton Magnetometer	200.00
Underwater Hydraulic Chainsaw (Timber)	200.00		2" X 20' Polyester Slings (2)	50.00
Underwater Hydraulic Cut Off Saw (Concrete)	300.00		Potable Water Dive System	450.00
4" Hydraulic Submersible Pump	95.00		Additional Vehicle	75.00
4" Hose Suction (50')/Discharge (50')	15.00		Work Boat	325.00
600' Dive Umbilical (2)	175.00		Large Work Boat (plus fuel)	450.00
Hot Water Unit	200.00		20' X10' Work Barge	150.00
Shallow Water Dive Package	150.00		5' X 10' Section of Barge	75.00

CONSUMABLES

Material Description	Price		Material Description	Price
Oxygen (Cylinder)	Requires Quote		Chain Saw Bar or Chain Saw Chain	Requires Quote
Acetylene (Cylinder)	Requires Quote		Sand/Cement Bags (Each)	Requires Quote
Splash Zone Epoxy (Per Kit)	Requires Quote		Hydraulic Cement (Per Bucket)	Requires Quote
Underwater Cutting Rods (Each)	Requires Quote		Titanium Burr Bit (Each)	Requires Quote
Buoy Assemblies – (Upper and Lower Buoys) - Each	30.00		CP9 Drill Bits (Each)	Requires Quote

NOTE: Any other equipment the Corporation (Client) may authorize the Contractor to furnish will be rented from a Vendor. The charge(s) will be passed through with a 15% mark-up
NOTE: All consumables and supplies will be invoiced at cost plus 15%

EXHIBIT "D"

Conditional Federal/Grant-Funded Contract Addendum

(Place Conditional Federal/Grant-Funded Contract Addendum behind this page)

EXHIBIT "D"
CONDITIONAL FEDERAL/GRANT-FUNDED CONTRACT ADDENDUM

1. Applicability

1.1 This Exhibit applies only if activated under Section 25 of the Agreement or under a Task Order. If not activated, this Exhibit is reserved and has no operative effect.
1.2 If activated, this Exhibit supplements the Agreement and applies to the federally funded or grant-funded Work only. Contractor shall comply with all applicable requirements of the federal award, grant agreement, pass-through entity, program rules, and applicable law.
1.3 The City may provide additional award-specific clauses, certifications, forms, wage determinations, reporting requirements, or flow-down provisions. Contractor shall comply with such requirements as a condition of performing the affected Work and receiving payment from the applicable funding source.

2. Federal Award and Grant Information

Federal/Grant Program: [insert]
Federal Awarding Agency: [insert]
Pass-Through Entity: [insert, if applicable]
Assistance Listing Number: [insert, if applicable]
Federal Award Identification Number: [insert, if applicable]
Award or Disaster Declaration Date: [insert, if applicable]
Project Number: [insert]
Special Award Conditions: [insert or attach]

3. Remedies for Breach

For contracts exceeding the simplified acquisition threshold, Contractor acknowledges that the City may exercise all administrative, contractual, legal, and equitable remedies available under the Contract Documents and applicable law if Contractor violates or breaches contract terms. Remedies may include withholding payment, requiring correction, suspension of Work, termination, procurement from alternate sources, damages, sanctions, and any other appropriate remedy.

4. Termination for Cause and Convenience

For contracts in excess of $10,000, the City may terminate the federally funded or grant-funded Work for cause or convenience as provided in the Agreement. The notice of termination will identify the effective date and the manner of termination. Contractor shall be paid only for authorized Work satisfactorily performed before the effective date of termination, subject to documentation, offsets, allowable cost requirements, and applicable grant rules.

5. Equal Employment Opportunity

Except as otherwise provided under 41 C.F.R. Part 60, if the Work is a federally assisted construction contract as defined in 41 C.F.R. § 60-1.3, Contractor shall comply with the equal opportunity clause in 41 C.F.R. § 60-1.4(b), which is incorporated by reference as if fully set forth

RESERVED

herein, and shall include the required clause in covered subcontracts and purchase orders.

6. Davis-Bacon Act and Copeland Anti-Kickback Act

When required by federal program legislation, all prime construction contracts in excess of $2,000 must include compliance with the Davis-Bacon Act, 40 U.S.C. §§ 3141-3148, as supplemented by Department of Labor regulations at 29 C.F.R. Part 5. If Davis-Bacon applies, Contractor shall pay laborers and mechanics at rates not less than the applicable wage determination, pay wages not less than once per week, submit certified payrolls if required, and comply with all applicable labor standards.
If Davis-Bacon applies, Contractor shall also comply with the Copeland "Anti-Kickback" Act, 40 U.S.C. § 3145, as supplemented by 29 C.F.R. Part 3, and shall not induce any person employed in the construction, completion, or repair of public work to give up any part of compensation to which the person is entitled. Contractor shall report suspected or reported violations to the City.

7. Contract Work Hours and Safety Standards Act

Where applicable, for contracts in excess of $100,000 that involve the employment of mechanics or laborers, Contractor shall comply with 40 U.S.C. §§ 3702 and 3704, as supplemented by Department of Labor regulations at 29 C.F.R. Part 5. Contractor shall compute wages based on a standard 40-hour workweek and shall compensate covered workers at not less than one and one-half times the basic rate of pay for hours worked in excess of 40 hours in a workweek. No laborer or mechanic shall be required to work under unsanitary, hazardous, or dangerous conditions. These requirements do not apply to purchases of supplies, materials, or articles ordinarily available on the open market, or to contracts for transportation or transmission of intelligence.

8. Rights to Inventions

If the federal award meets the definition of "funding agreement" under 37 C.F.R. § 401.2(a), and the Work involves substitution of parties, assignment, or performance of experimental, developmental, or research work under that funding agreement, Contractor shall comply with 37 C.F.R. Part 401 and any implementing regulations issued by the awarding agency.

9. Clean Air Act and Federal Water Pollution Control Act

For contracts and subgrants exceeding $150,000, Contractor shall comply with all applicable standards, orders, and regulations issued pursuant to the Clean Air Act, 42 U.S.C. §§ 7401-7671q, and the Federal Water Pollution Control Act, 33 U.S.C. §§ 1251-1387. Contractor shall report each violation to the City, and the City will report violations as required to the federal awarding agency and the appropriate EPA regional office. Contractor shall include these requirements in each covered subcontract exceeding $150,000.

10. Debarment and Suspension

Contractor shall comply with Executive Orders 12549 and 12689 and 2 C.F.R. Part 180. Contractor shall not enter into covered transactions with parties listed on the governmentwide exclusions in the System for Award Management. Contractor shall verify that Contractor, its principals, and its affiliates are not excluded or disqualified and shall include this requirement in lower-tier covered

RESERVED

transactions.

11. Byrd Anti-Lobbying Amendment

For awards exceeding $100,000, Contractor shall comply with the Byrd Anti-Lobbying Amendment, 31 U.S.C. § 1352. Contractor shall certify that it has not and will not use federal appropriated funds to pay any person or organization for influencing or attempting to influence an officer or employee of an agency, a member of Congress, an officer or employee of Congress, or an employee of a member of Congress in connection with obtaining a federal contract, grant, or other covered award. Contractor shall disclose lobbying with non-federal funds as required and shall require each lower tier to make the same certification and disclosure.

12. Procurement of Recovered Materials

Contractor shall comply with 2 C.F.R. § 200.323 and Section 6002 of the Solid Waste Disposal Act, as amended by the Resource Conservation and Recovery Act, to the extent applicable. Contractor shall procure designated items containing the highest percentage of recovered materials practicable, consistent with competition and performance requirements, when the purchase price exceeds the applicable threshold or the value of the quantity acquired during the preceding fiscal year exceeded the applicable threshold. Contractor shall also procure solid waste management services in a manner that maximizes energy and resource recovery and shall support the City's affirmative procurement program where applicable.

13. Domestic Preferences for Procurements

As appropriate and to the extent consistent with law, Contractor shall comply with 2 C.F.R. § 200.322 by providing a preference for the purchase, acquisition, or use of goods, products, or materials produced in the United States, including iron, aluminum, steel, cement, and other manufactured products, when the Work is performed under a federal award.

14. Prohibition on Certain Telecommunications and Video Surveillance Equipment or Services

Contractor shall comply with 2 C.F.R. § 200.216 and shall not obligate or expend federal funds to procure, obtain, extend, renew, or enter into a contract to procure or obtain covered telecommunications equipment or services as a substantial or essential component of any system or as critical technology as part of any system. Contractor shall include this prohibition in applicable subcontracts and purchase orders.

15. Build America, Buy America

If the Work is an infrastructure project funded by a federal financial assistance program subject to the Build America, Buy America Act, Contractor shall comply with all applicable domestic content procurement preference requirements for iron, steel, manufactured products, and construction materials permanently incorporated into the project, unless a waiver applies. Contractor shall provide certifications, documentation, and product information required by the City, funding agency, or pass-through entity.

16. Small and Minority Businesses, Women's Business Enterprises, Veteran-Owned Businesses,

RESERVED

and Labor Surplus Area Firms

Contractor shall take the affirmative steps required by 2 C.F.R. § 200.321 to assure that small businesses, minority businesses, women's business enterprises, veteran-owned businesses, and labor surplus area firms are used when possible, including, as applicable, placing such businesses on solicitation lists, soliciting them when they are potential sources, dividing requirements when economically feasible, establishing delivery schedules that encourage participation, using appropriate assistance organizations, and requiring subcontractors to take the same affirmative steps.

17. Bonding Requirements for Federal Construction or Facility Improvement Contracts

For construction or facility improvement contracts or subcontracts exceeding the simplified acquisition threshold, Contractor shall comply with the bonding requirements in 2 C.F.R. § 200.326 when the federal award requires such bonding, including bid guarantee, performance bond, and payment bond requirements unless the federal agency or pass-through entity determines that the City's bonding policy and requirements adequately protect the federal interest.

18. Access to Records; Retention

Contractor shall provide the City, the federal awarding agency, the pass-through entity, the Comptroller General of the United States, and their authorized representatives access to any documents, papers, records, and other materials that are directly pertinent to the federal or grant-funded Work for the purpose of making audits, examinations, excerpts, and transcriptions. Contractor shall retain records for the period required by 2 C.F.R. Part 200, the award terms, the Agreement, and applicable law, whichever is longer.

19. No Obligation by Federal Government

The federal government is not a party to this Agreement or any Task Order and is not subject to any obligations or liabilities to the City, Contractor, or any other party arising from the Agreement or Work.

20. Program Fraud and False or Fraudulent Statements

Contractor acknowledges that 31 U.S.C. Chapter 38 and other federal laws concerning fraud, false claims, and false statements may apply to Contractor's actions pertaining to federally funded or grant-funded Work. Contractor shall not submit false, fictitious, fraudulent, or misleading claims, certifications, invoices, records, or statements.

21. Additional Award-Specific Terms

If the federal awarding agency, pass-through entity, grant agreement, disaster assistance program, or other funding source requires additional clauses, certifications, forms, reporting, wage determinations, environmental/historic preservation conditions, civil rights provisions, procurement certifications, or other requirements, such requirements are incorporated into the affected Task Order upon written notice by the City. Contractor shall execute additional documents reasonably required by the City to document compliance.

RESERVED

CITY COMMISSION MEETING
CITY OF ST. PETE BEACH
COMMISSION CHAMBERS

Agenda Report

Agenda Title Name: Authorize the City Manager to execute the Agreement with RCM Utilities, LLC for Wastewater System Rehabilitation Services on an as-needed basis in an amount not to exceed annually appropriated funding.

Action Request: Motion to authorize the City Manager to execute the Agreement with RCM Utilities, LLC for Wastewater System Rehabilitation Services on an as-needed basis in an amount not to exceed annually appropriated funding.

Strategic Objective: Reliable Infrastructure

Date: June 23, 2026

Prepared By: Camden Mills, Public Services Director

Through: Frances Robustelli, City Manager

Summary of Issue: The City publicly advertised a Request for Proposals (RFP) for Wastewater System Rehabilitation Services, including manhole rehabilitation, pipe lining, and point repairs. Fifteen (15) responsive proposals were received on April 8, 2026. Following evaluation, the City's selection committee recommended award to Flotech Environmental LLC, Hinterland Group, LLC, RCM Utilities, LLC, Rowland (DE), LLC, and SAK Construction, LLC based on the following criteria:

- Qualifications and Experience
- References and Past Performance
- Capacity to Perform the Work
- Cost

The contract provides not-to-exceed unit prices for wastewater system manhole rehabilitation, cured-in-place pipe (CIPP) lining, and point repairs on an as-needed basis, allowing the City to efficiently address defects identified through routine inspections, CCTV assessments, emergency response activities, regulatory requirements, and ongoing asset management programs.

Work will be authorized by task order on an as-needed basis in an amount not to exceed annually budgeted funding. The initial contract term is three (3) years with the option for two (2) additional one (1) year renewals upon mutual agreement and annual appropriation of funds.

Approval of this agreement will provide the City with qualified contractors to perform wastewater rehabilitation services that reduce inflow and infiltration, improve system reliability, extend asset service life, and support the City's wastewater capital improvement and maintenance programs.

Funding: 401.5350.565000 Wastewater Capital Improvements (remaining balance $2,746,041.85)

401.5350.546007 – Wastewater Repairs
(remaining balance $279,990.50)

Attachments: 1. RCM Services Agreement Signed

CITY OF ST. PETE BEACH, FLORIDA
SERVICES AGREEMENT

Wastewater System Rehabilitation Services

This is an Agreement (the "Agreement") entered into by and between the **CITY OF ST. PETE BEACH** (hereinafter "City") and **RCM Utilities, LLC.** (hereinafter "Contractor"). The City and Contractor together shall be referred to as the "parties."

WHEREAS, The City properly issued a Request for Proposals, attached and incorporated hereto as Exhibit "B" and the City Commission authorized the selection of Contractor at its 06/23/2026, public hearing.

WHEREAS, City desires to purchase from Contractor the services described in this Agreement.

WHEREAS, Contractor is in the business of providing the services described herein, and has submitted an appropriate proposal to the City to provide the same.

WHEREAS, this Agreement has been properly approved by the appropriate authority of the City and the Contractor.

NOW, THEREFORE, upon the mutual covenants contained herein, and other good and valuable considerations, the sufficiency of which is hereby acknowledged, the parties hereto hereby agree to the following:

1. Recitals. The foregoing recitals are true and correct and incorporated herein by reference.

2. Standard Contract Addendum. The attached Standard Contract Addendum, which contains all the Florida Statutorily required provisions applicable to this Agreement, is attached hereto as Exhibit "A" and its provisions modify and supplement this Agreement.

3. Scope of Services. The Contractor must perform all work for the City required by the contract documents as set forth below:

a. Contractor will furnish all labor, materials, and equipment necessary as indicated in the Request for Bids (Exhibit "B") in the amount of Not To Exceed the Annual Budgeted amount. Funding will be awarded by Task Orders.

b. Contractor must supervise the workforce to ensure that all workers conduct themselves and perform their work in a safe and professional manner. Contractor must comply with all OSHA safety rules and regulations in the operation of equipment and in the performance of the work. Contractor must at all times have a competent field supervisor on the job site to enforce these policies and procedures at the Contractor's expense.

c. Contractor will provide the City with seventy-two (72) hours written notice prior to the beginning of work under this Agreement and prior to any schedule change with the exception of changes caused by inclement weather.

d. Contractor must comply with any and all Federal, State, and local laws and regulations

now in effect, or hereinafter enacted during the term of this Agreement, which are applicable to the Contractor, its employees, agents or subcontractors, if any, with respect to the work and services described herein. The Contractor further warrants that there has been no violation of copyrights or patent rights either in the United States of America or in foreign countries in connection with the work of the contract.

e. Contractor warrants to the City that all goods and materials furnished under the contract will be new unless otherwise specified and that contractor possesses good, clear, and marketable title to said goods and there are no pending liens, claims, or encumbrances whatsoever against said goods. All work not conforming to these requirements, including substitutions not properly approved and authorized may be considered defective. Contractor further warrants that all goods, materials and workmanship furnished, whether furnished by the Contractor or its subcontractors and suppliers, will comply with the specifications, drawings and other descriptions supplied or adopted. Last, Contractor warrants all material and workmanship for a minimum of (1) year from date of project completion and acceptancy by the City. If within one (1) year after acceptance by the City, or within such larger period of time as may be prescribed by law any of the work is found to be defective or not in accordance with the contract documents, the Contractor will, after receipt of a written notice from the City to do so, promptly correct the work.

4. Damages. Time is of the essence in the performance of this Agreement. City shall be entitled to liquidated damages in the amount of $500 per day, for each day after the date set forth in paragraph 10, that Contractor has failed to properly and completely deliver all goods or provide all service specified herein. The Contractor specifically acknowledges that the foregoing sum is reasonable and does not constitute a penalty.

5. Remedies.

   a. Damages. The City reserves the right to recover any ascertainable actual damages incurred as a result of the failure of the Contractor to perform in accordance with the requirements of this Agreement, or for losses sustained by the city resultant from the Contractor's failure to perform in accordance with the requirements of this Agreement.

   b. Correction of Work. If, in the judgment of the City, work provided by the Contractor does not conform to the requirements of this Agreement, or if the work exhibits poor workmanship, the city reserves the right to require that the Contractor correct all deficiencies in the work to bring the work into conformance without additional cost to the City, and/or replace any personnel who fail to perform in accordance with the requirements of this Agreement. The City is the sole judge of non-conformance and the quality of workmanship.

6. Waiver of Liens. Prior to final payment of the Contract Sum, a final waiver of lien must be submitted by all suppliers, subcontractors, and/or Contractors who worked on the project that is the subject of this Agreement.

7. Warranties.
   a. Warranty of Title. Contractor warrants to the City that all goods and materials furnished

under the contract will be new unless otherwise specified and that Contractor possesses good, clear, and marketable title to said goods and there are no pending liens, claims, or encumbrances whatsoever against said goods. All work not conforming to these requirements, including substitutions not properly approved and authorized may be considered defective.

b. Warranty of Specifications. The Contractor warrants that all goods, materials, workmanship furnished, whether by the Contractor or its subcontractors and suppliers, will comply with the specifications, drawings and other descriptions supplied or adopted.

c. Warranty of Merchantability. The Contractor warrants all material and workmanship for a minimum of one (1) year from date of project completion and acceptance by the City. If within one (1) year after acceptance by the city, or within such larger period of time as may be described by law any of the work is found to be defective or not in accordance with the contract documents, the Contractor must after receipt of a written notice from the City to do so, promptly correct the work unless the City has previously given the Contractor a written acceptance of such condition.

8. Term. This Agreement will remain in effect for a period of (3) three years with (2) two, (1) one-year extensions from the Effective Date.

9. Effective date. The "Effective Date" of this Agreement shall be the date this Agreement has been executed by all parties.

10. Termination. This Agreement may be canceled by the City when:
   a. Sufficient funds are not available to continue its full and faithful performance to the Agreement.
   b. Sub-standard or non-performance of Agreement.
   c. The City wishes to terminate the Agreement at any time and for any reason, upon giving thirty (30) days prior written notice to the Contractor.

11. Fiscal Non-funding. If funds for the requested services described herein are not appropriated via the annual budget adoption process, the City reserves the right to cancel the Agreement immediately upon written notice to the Contractor.

12. Non-Exclusivity. Contractor acknowledges that the City may enter into agreements with other consultants or may have its own employees complete the work for services similar to the services that are subject to this Agreement.

13. Compensation. Upon Contractor's satisfactory full performance of the services or in accordance with the payment schedule provided in the attached proposal, City shall pay Contractor, as full consideration for services provided in this Agreement.

14. Insurance. To the extent that this Agreement requires Contractor to provide any services of any kind, Contractor and all of Contractor's subcontractors shall maintain public liability insurance in a combined single limit for bodily injury and property damage in the amount of not less than $1,000,000.00, satisfactory to the City Manager, naming the City as an additionally named insured and providing coverage up through and including the final performance of any services provided

herein. Contractor and all of Contractor's subcontractors shall maintain in full force and effect a policy of worker's compensation insurance for all of Contractor's employees in accordance with applicable state and federal law. Said insurance coverage shall include employer's liability with a single limit of $100,000.00 per accident or occurrence. Contractor shall present City with a certificate for all the foregoing insurance, at the time of executing this Agreement and at such other times requested by the City.

The Contractor waives all rights against the City, its consultants, separate contractors, if any, and any of its subcontractors, agents and employees, for any and all damages caused to the extent covered by insurance described herein and obtained pursuant to this Section or other property insurance applicable to the services and product provided under this Agreement. The City shall require of the Contractor, Contractor's consultants, separate contractors, if any, and the subcontractors, sub-subcontractors, agents and employees of any of them, by appropriate agreements, written where legally required for validity, similar waivers each in favor of other parties enumerated herein. The policies shall provide such waiver of subrogation by endorsement otherwise. A waiver of subrogation shall be effective as to a person or entity even though that person or entity would otherwise have a duty of indemnification, contractual or otherwise, did not pay the insurance premium directly or indirectly, and whether or not the person or entity had an insurable interest in the property damaged.

15. Indemnification. In consideration of the payment of ten dollars as part of the compensation described herein, such sum being specifically found by Contractor to be sufficient consideration for this indemnification, Contractor shall indemnify, defend and hold the City harmless for itself, its past/present/future elected and appointed officials, its employees, agents and assigns, from and against any and all losses, claims, damages, suits, actions, liability or demands, including attorneys' fees and costs of litigation through all appellate proceedings, arising from the performance or non-performance of this Agreement, whether caused in part by the City or not, and in connection with violations of copyrighted or trademarked materials used by Contractor, loss of life, bodily or personal injury, or property damage, including loss of use thereof, directly or indirectly caused by, resulting from, arising out of or occurring in connection with the operations of the Contractor or its officers, employees, agents, subcontractors, or independent Contractors, excepting only such loss of life, bodily or personal injury, or property damage solely attributable to the gross negligence or willful misconduct of the City or its elected or appointed officials and employees. In any and all claims against the City, or any of their agents or employees by any employee of the Contractor any subcontractor, anyone directly or indirectly employed by any of them or anyone for whose acts any of them may be liable, the indemnification obligation under this paragraph is not limited in any way by any limitation in this amount or type of damages compensation or benefits payable by or for the Contractor or any subcontractor under Workers' Compensation Acts, Disability Benefit Acts or other Employee Benefit Acts. Nothing contained herein is intended nor may it be construed, to waive City's rights and immunities under the common law or Section 768.28, Florida Statutes, as amended from time to time; nor will anything included herein be construed as consent to be sued by any third parties in any matter arising out of this Agreement. To the extent considered necessary by the Contract Administrator and the City Attorney, any sums due Contractor under this Agreement may be retained by the City until all of the City's claims subject to this indemnification obligation have been settled or otherwise resolved, and any amount withheld is not subject to payment of interest by the City. The above provisions

will survive the termination or expiration of this Agreement and will pertain to any occurrence during the term of this Agreement, even though the claim may be made after the termination or expiration hereof.

16. Discriminatory Vendor List. Contractor hereby acknowledges its continuous duty to disclose to the City if the Contractor or any of its affiliates, as defined by Section 287.134 (1)(a), Florida Statutes, are placed on the Discriminatory Vendor List. Pursuant to Section 287-134 (2)(a), Florida Statutes: "An entity or affiliate who has been placed on the discriminatory vendor list may not submit a bid, proposal, or reply on a contract to a public entity; may not submit a bid or proposal, or reply on a contract with a public entity for the construction or repair of a public building or public work; may not submit bids, proposals, or replies on leases of real property to a public entity; may not be awarded or perform work as a contractor, supplier, subcontractor, or consultant under a contract with any public entity; and may not transact business with any public entity."

17. Independent Contractor. This Agreement does not create an employee/employer relationship between the parties. It is the intent of the parties that the Contractor is an independent contractor under this Agreement and not the City's employee for any purposes, including but not limited to, the application of the Fair Labor Standards Act minimum wage and overtime payments, Federal Insurance Contribution Act, the Social Security Act, the Federal Unemployment Tax Act, the provisions of the Internal Revenue Code, the State Worker's Compensation Act, and the State Unemployment Insurance law. The Contractor will retain sole and absolute discretion in the judgment of the manner and means of carrying out Contractor's activities and responsibilities hereunder provided, further that administrative procedures applicable to services rendered under this Agreement will be those of Contractor, which policies of Contractor will not conflict with City, State, or United States policies, rules, or regulations relating to the use of Contractor's funds provided for herein. The contractor agrees that it is a separate and independent enterprise from the City, that it had full opportunity to find other business, that it has made its own investment in it business, and that it will utilize a high level of skill necessary to perform the work. This Agreement must not be construed as creating any joint employment relationship between the Contractor and the City and the City will not be liable for any obligation incurred by Contractor, including but not limited to unpaid minimum wages and/or overtime premiums.

18. Audit Rights. The City reserves the right to audit the records of the Contractor for the commodities and/or serves provided under the contract at any time during the performance and term of the contract and for a period of five (5) years after completion and acceptance by the City. If required by the City, the Contractor agrees to submit to an audit by an independent certified public accountant selected by the City. The Contractor must allow the City to inspect, examine and review the records of the Contractor in relation to this Agreement at any an all times during normal business hours during the term of the Agreement.

19. Exhibits. The following Exhibits shall be attached, incorporated, and made a part of this Agreement:

a. Standard Contract Addendum (Exhibit "A")
b. Request for Bid/Proposal (Exhibit "B")
c. Vendor Bid/Proposal (Exhibit "C")

d. Conditional Federal/Grant-Funded Contract Addendum (Exhibit "D")

20. Notices. All notices sent pursuant to this Agreement shall be given in writing via certified mail or overnight courier and shall be delivered to the following addresses:

As to Contractor:
RCM Utilities, LLC.
1451 Pine Grove Road
Eustis, FL 32726

As to City:
City Manager
City of St. Pete Beach
155 Corey Avenue
St. Pete Beach, FL 33706

With Copy To:
melissa@rcmutilities.com

With Copy To:
attorney@stpetebeach.org

21. Conflicts and Severability. To the extent that any terms in the attached proposal conflict with the terms of this Agreement, the terms of this Agreement shall control and supersede such conflicting terms in the attached proposal, to the extent of such conflict. If any section, part of section, paragraph, clause, phrase, or word of this Agreement is declared invalid, the remaining provisions of this Agreement shall not be affected.

22. Amendments. This document and exhibits embody the entire Agreement of the parties. There are no promises, terms, conditions, or representations binding on either party hereto, other than those contained herein; and this document shall supersede all previous communications, representations, and/or agreements between the parties hereto, whether written or oral. This Agreement shall not be modified by any oral statement, communication, Agreement, course of conduct, or by anything other than a writing signed by the parties. This Agreement may be amended or modified only in writing signed by all parties hereto.

23. Jurisdiction, Venue, Attorney Fees. This Agreement shall be governed and construed according to the laws of Florida, and venue for any action arising herefrom shall be in Pinellas County, Florida. The prevailing party in any action to enforce or interpret this Agreement shall be entitled to reasonable attorney's fees incurred through all appellate proceedings.

24. Assignment. This Agreement shall be binding upon the parties, their successors, assigns, and legal representatives. Contractor shall not assign or otherwise transfer any of the rights or duties under this Agreement, without the express written consent of the City.

25. Counterparts. This Agreement may be executed and delivered in any number of counterparts, each of which so executed and delivered shall be deemed to be an original and all of which shall constitute one and the same instrument. Facsimile, documents executed, scanned and transmitted electronically and electronic signatures shall be deemed original signatures for purposes of this Agreement and all matters related thereto, with such facsimile, scanned and electronic signatures having the same legal effect as original signatures.

26. Authority. Contractor hereby acknowledges that the person executing this Agreement on behalf of Contractor has the full authority to do so and to bind Contractor to the terms hereof.

IN WITNESS WHEREOF, the Parties have executed this Agreement on the day and year set forth below.

Under penalties of perjury, and pursuant to Sec. 92.525, Fla. Stat., Contractor declares that Contractor has read the Section 15 of the Standard Contract Addendum, Exhibit "A", and that the facts stated in it are true.

RCM Utilities LLC:	**City of St. Pete Beach:**
Signature: F. Allen Bates III	Signature: _____
By: Francis A. Bates, III	By: Frances Robustelli
Its: Vice President	Its: City Manager
Date: 06/02/2026	Date: _____
APPROVED AS TO FORM AND LEGAL SUFFICIENCY:	ATTEST:
_____	_____
Ralf Brookes City Attorney	Renee Rose City Clerk

EXHIBIT "A"

Standard Contract Addendum

(Place Standard Contract Addendum behind this page)

CITY OF ST. PETE BEACH, FLORIDA
STANDARD CONTRACT ADDENDUM

THIS STANDARD CONTRACT ADDENDUM is made and entered into this 2 day of June, 2026, by and between the CITY OF ST. PETE BEACH, a Florida municipality, hereinafter referred to as the "City", and **RCM Utilities, LLC**, hereinafter referred to as "Contractor", concerning that certain agreement dated the 2 day of June, 2026 ("Agreement") and titled _____.

WITNESSETH:

WHEREAS, Section 119.0701, Fla. Stat., requires that certain public agency contracts must include certain statutorily required provisions concerning the contractor's compliance for Florida's Public Records Act; and

WHEREAS, Section 768.28, Fla. Stat., sets forth certain mandatory limitations on indemnification and liability for Florida public agencies; and

WHEREAS, Florida law requires that public agency contracts be subject to non-appropriation and thereby contingent upon appropriation during the public agency's statutorily mandated annual budget approval process; and

WHEREAS, Section 448.095, Fla. Stat., imposes certain obligations on public agencies with regard to the use of the E-Verify system by their contractors and subcontractors; and

WHEREAS, Section 287.133 and 287.135, Fla. Stat., provides restrictions on local governments contracting with companies that are on certain Scrutinized Companies lists or convicted vendor list; and

WHEREAS, additional terms required by Sections 282.3185(5) and (6) Fla. Stat. related to data management and Section 287.05701 Fla. Stat. related to social government and corporate activism are also added by virtue of this Addendum; and

WHEREAS, Section 286.101, Florida Statutes contains a list of "foreign countries of concern" including, the People's Republic of China, the Russian Federation, the Islamic Republic of Iran, the Democratic People's Republic of Korea, the Republic of Cuba, the Venezuelan regime of Nicolás Maduro, or the Syrian Arab Republic, including any agency of or any other entity under significant control of such "foreign country of concern". Any entity that does business with a state agency or political subdivision must disclose certain of their dealings with those "foreign countries of concern" to the Florida Department of Financial Services; and

WHEREAS, Section 787.06(13), Fla. Stat. provides that when a contract is executed, renewed, or extended between a nongovernmental entity and a governmental entity, the nongovernmental entity must provide the governmental entity with an affidavit signed by an

officer or a representative of the nongovernmental entity under penalty of perjury attesting that the nongovernmental entity does not use coercion for labor or services as defined in such statute;

NOW, THEREFORE, in consideration of the covenants set forth herein, the parties agree to this addendum as follows:

1. Amendment. This Addendum hereby amends and supplements the terms of the Agreement. In the event of a conflict between the terms of the Agreement and terms of the Addendum, the terms of the Addendum shall prevail.

2. Public Records Compliance. Contractor agrees that, to the extent that it may "act on behalf" of the City within the meaning of Section 119.0701(1)(a), Florida Statutes in providing its services under this Agreement, it shall:

(a) Keep and maintain public records required by the public agency to perform the service.

(b) Upon request from the public agency's custodian of public records, provide the public agency with a copy of the requested records or allow the records to be inspected or copied within a reasonable time at a cost that does not exceed the cost provided in this chapter or as otherwise provided by law.

(c) Ensure that public records that are exempt or confidential and exempt from public records disclosure requirements are not disclosed except as authorized by law for the duration of the contract term and following completion of the contract if the contractor does not transfer the records to the public agency.

(d) Upon completion of the contract, transfer, at no cost, to the public agency all public records in possession of the contractor or keep and maintain public records required by the public agency to perform the service. If the contractor transfers all public records to the public agency upon completion of the contract, the contractor shall destroy any duplicate public records that are exempt or confidential and exempt from public records disclosure requirements. If the contractor keeps and maintains public records upon completion of the contract, the contractor shall meet all applicable requirements for retaining public records. All records stored electronically must be provided to the public agency, upon request from the City's custodian of public records, in a format that is compatible with the information technology systems of the City.

(e) Pursuant to Section 119.0701(2)(a), Fla. Stat., **IF THE CONTRACTOR HAS QUESTIONS REGARDING THE APPLICATION OF CHAPTER 119, FLORIDA STATUTES, TO THE CONTRACTOR'S DUTY TO PROVIDE PUBLIC RECORDS RELATING TO THIS AGREEMENT, CONTACT THE CUSTODIAN OF PUBLIC RECORDS AT:**

Renee Rose
City Clerk/Public Records Custodian
cityclerk@stpetebeach.org

Phone: 727-363-9220
155 Corey Avenue
St. Pete Beach, FL 33706
Fax: 727-541-8040

3. Public Records Compliance Indemnification. Contractor agrees to indemnify and hold the City harmless against any and all claims, damage awards, and causes of action arising from the contractor's failure to comply with the public records disclosure requirements of Section 119.07(1), Florida Statutes, or by contractor's failure to maintain public records that are exempt or confidential and exempt from the public records disclosure requirements, including, but not limited to, any third party claims or awards for attorneys' fees and costs arising therefrom. Contractor authorizes the public agency to seek declaratory, injunctive, or other appropriate relief against Contractor in Pinellas County Circuit Court on an expedited basis to enforce the requirements of this section.

4. Compliance/Consistency with Section 768.28, Fla. Stat. Any indemnification or agreement to defend or hold harmless by City specified in the Agreement shall not be construed as a waiver of City's sovereign immunity, and shall be limited to such indemnification and liability limits consistent with the requirements of Section 768.28, Fla. Stat. and subject to the procedural requirements set forth therein. Any other purported indemnification by City in the Agreement in derogation hereof shall be void and of no force or effect.

5. Non-appropriation. City's performance and obligation to pay under this Agreement is contingent upon an appropriation during the City's annual budget approval process. If funds are not appropriated for a fiscal year, then the Contractor shall be notified as soon as is practical by memorandum from the City Manager or designee that funds have not been appropriated for continuation of the Agreement, and the Agreement shall expire at the end of the fiscal year for which funding has been appropriated. The termination of the Agreement at fiscal year end shall be without penalty or expense to the City subject to the City paying all invoices for services rendered during the period the Agreement was funded by appropriations.

6. E-Verify Compliance. By entering into this Agreement, the Contractor is obligated to comply with the provisions of Section 448.095, Fla. Stat. "Employment Eligibility," as amended from time to time. This includes but is not limited to register with and use the E-Verify System to verify the work authorization status of all newly hired employees, and requiring all subcontractors to provide an affidavit to Contractor attesting that the subcontractor does not employ, contract with, or subcontract with, an unauthorized alien. Contractor agrees to maintain a copy of such affidavit for the duration of this Agreement. Failure to comply with this paragraph will result in the termination of this Agreement as provided in Section 448.095, Fla. Stat., as amended and Contractor will not be awarded a public contract for at least one (1) year after the date on which the Agreement was terminated. Contractor will also be liable for any additional costs to the City as a result of the termination of this Agreement in accordance with this paragraph. Contractor affirmatively states, under penalty of perjury, that in accordance with Section 448.095, Fla. Stat., Contractor is registered with and uses the E-Verify system to verify the work authorization status of all newly hired employees, that in accordance with such statute, Contractor requires from each of its subcontractors an affidavit stating that the subcontractor does not employ, contract with, or

subcontract with an unauthorized alien, and that Contractor is otherwise in compliance with Sections 448.09 and 448.095, Fla. Stat.

7. Compliance/Consistency with Scrutinized Companies Provisions of Florida Statutes. Section 287.135(2)(a), Fla. Stat., prohibits a company from bidding on, submitting a proposal for, or entering into or renewing a contract for goods or services of any amount if, at the time of contracting or renewal, the company is on the Scrutinized Companies that Boycott Israel List, created pursuant to Section 215.4725, Fla. Stat., or is engaged in a boycott of Israel. Section 287.135(2)(b), Fla. Stat., further prohibits a company from bidding on, submitting a proposal for, or entering into or renewing a contract for goods or services over one million dollars ($1,000,000) if, at the time of contracting or renewal, the company is on either the Scrutinized Companies with Activities in Sudan List or the Scrutinized Companies with Activities in the Iran Petroleum Energy Sector List, both created pursuant to section 215.473, Fla. Stat., or the company is engaged in business operations in Cuba or Syria. Contractor hereby certifies that Contractor is not listed on any of the following: (i) the Scrutinized Companies that Boycott Israel List, (ii) Scrutinized Companies with Activities in Sudan List, or (iii) the Scrutinized Companies with Activities in the Iran Petroleum Energy Sector List. Contractor further hereby certifies that Contractor is not engaged in a boycott of Israel or engaged in business operations in Cuba or Syria. Contractor understands that pursuant to section 287.135, Fla. Stat., the submission of a false certification may subject Contractor to civil penalties, attorney's fees, and/or costs. Contractor further understands that any contract with City for goods or services of any amount may be terminated at the option of City if Contractor (i) is found to have submitted a false certification, (ii) has been placed on the Scrutinized Companies that Boycott Israel List, or (iii) is engaged in a boycott of Israel. And, in addition to the foregoing, if the amount of the contract is one million dollars ($1,000,000) or more, the contract may be terminated at the option of City if the company is found to have submitted a false certification, has been placed on the Scrutinized Companies with Activities in Sudan List or the Scrutinized Companies with Activities in the Iran Petroleum Energy Sector List, or has been engaged in business operations in Cuba or Syria.

8. Disclosure Requirements for "Foreign Countries of Concern". CONTRACTOR shall comply with the disclosure requirements set forth is Section 286.101 (3) (a), Fla. Stat., which requires "Any entity that applies to a state agency or political subdivision for a grant or proposes having a contract value of $100,000 or more shall disclose to the state agency or political subdivision any current or prior interest of, any contract with, or any grant or gift received from a "foreign country of concern" if such interest, contract, grant or gift received from a "foreign country of concern" if such interest, contract, grant or gift has a value of $50,000 or more and such interest existed at any time or such contract, grant or gift was received or in force at any time during the previous five (5) years. Such disclosure shall contain the name and mailing address of the disclosing entity, the amount of the gift or the value of the interest disclosed, the applicable "foreign country of concern" and, if applicable the date of termination of the contract or interest, the date of receipt of the grant or gift and the name of the agent or controlled entity that is the source or interest holder. Within one (1) year before applying for any grant or proposing any contract, such entity must provide a copy of such disclosure to the Department of Financial Services". Pursuant to Section 286.101(7), Fla. Stat.: "In addition to any fine assessed under [section 286.101(7)(a), F.S.], a final order determining a third or subsequent violation by an entity other than a state agency or political subdivision shall automatically disqualify the entity from

eligibility for any grant or contract funded by a state agency or any political subdivision until such ineligibility is lifted by the Administration Commission for good cause."

9. Venue and Jurisdiction. Notwithstanding any of other provision to the contrary, this Agreement and the parties' actions under this Agreement shall be governed by and construed under the laws of the State of Florida, without reference to conflict of law principles. As a material condition of this Agreement, each Party hereby irrevocably and unconditionally: i) consents to submit and does submit to the jurisdiction of the Circuit Court in and for Pinellas County, Florida for any actions, suits or proceedings arising out of or relating to this Agreement. Both parties waive any right to file an action, suit or proceeding in Federal Court or remove any action, suit or proceeding to Federal Court.

10. Attorneys' Fees and Costs. Notwithstanding any of other provision to the contrary, if litigation ensues regarding this Agreement, each party hereto shall bear its own attorneys' fee and costs.

11. Public Entities Crime or Convicted Vendor List. Contractor agrees and assumes a continuous duty to disclose to the City if the Contractor or any of its affiliates as defined by Section 287.133(1)(a), Florida Statutes are placed on the Convicted Vendor List or the Antitrust Violator Vendor List maintained by the Florida Department of Management Services.

12. Data Management; Notice of Breach. Contractor shall cooperate with the City and provide timely incident reporting, response activities/fact gathering, public and agency notification, severity level assessment, after-action reports, etc., which the City must report in accordance with Sections 282.3185(5) & (6), Florida Statutes in the event of a data breach.

13. Environmental and Social Government and Corporate Activism. The City has not given preference or requested documentation from the Contractor based on Contractor's social, political or ideological interest. Contractor agrees to similarly not request documentation or give preference to any subcontractor based on the subcontractor's social, political or ideological interests.

14. Taxes. The City shall not be liable for any taxes and assessments imposed by a federal, state or local governmental agency to the extent that the City is exempt from same by Florida law, including but not limited to any sales or use tax.

15. No coercion for labor or services. The Contractor swears under penalty of perjury that the Contractor does not use coercion for labor or services as defined as follows:

"Coercion" means:

1. Using or threatening to use physical force against any person;
2. Restraining, isolating, or confining or threatening to restrain, isolate, or confine any person without lawful authority and against her or his will;
3. Using lending or other credit methods to establish a debt by any person when labor or services are pledged as a security for the debt, if the value of the labor or services as reasonably assessed is not applied toward the liquidation of the debt, the length and nature of the labor or services are not respectively limited and defined;

4. Destroying, concealing, removing, confiscating, withholding, or possessing any actual or purported passport, visa, or other immigration document, or any other actual or purported government identification document, of any person;

5. Causing or threatening to cause financial harm to any person;

6. Enticing or luring any person by fraud or deceit; or

7. Providing a controlled substance as outlined in Schedule I or Schedule II of Sec. 893.03, Fla. Stat. to any person for the purpose of exploitation of that person.

16. Force Majeure. The City reserves the right to suspend, modify or terminate this contract in the event of an act of god or act of man beyond the control of the parties, including but not limited to a hurricane, tropical storm, tornado, or other destructive weather event, flooding, pandemic, plague, war, armed conflict, domestic or foreign terrorism, riot, labor condition, state or federal governmental action, and catastrophic Internet disturbance, making performance inadvisable, economically impracticable, illegal, or impossible.

17. Additional Terms. Notwithstanding any of other provision to the contrary, the parties agree as follows:

A. None.

IN WITNESS WHEREOF, the parties hereto have executed and delivered this instrument on the days and year indicated below and the signatories below to bind the parties set forth herein.

Under penalties of perjury, and pursuant to Sec. 92.525, Fla. Stat., Contractor declares that Contractor has read the foregoing Section 15 above and that the facts stated in it are true.

Contractor:

F. Allen Bates III

Print Name: **Francis Allen Bates III**

Title: **Vice President**

Company: **RCM Utilities, LLC**

ATTEST:

Renee Rose, City Clerk

City of St. Pete Beach:

Frances Robustelli, City Manager

EXHIBIT "B"

Request for Bid/Proposal

(Place Request for Bid/Proposal behind this page)

City of St Pete Beach
Request for Proposal

Wastewater System Rehabilitation Services

Timeline	Date	Time
Publication of Bid	03/11/2026	8:00 AM
Pre-Bid Meeting	03/18/2026	11:00 AM
Deadline for Question Submission	03/25/2026	10:00 AM
Submittal Deadline electronically via Bonfire	04/08/2026	9:00 AM
Submittal Opening	04/08/2026	10:00 AM

Submittals are due on or before
04/08/2026 at 9:00 AM EST
Electronically Via Bonfire Only

TABLE OF CONTENTS

I. INVITATION 3
II. STATEMENT OF WORK AND TECHNICAL SPECIFICATIONS 4
III. BID FORM 5
IV. GENERAL CONTRACT TERMS 6
V. REFERENCES & MINIMUM QUALIFICATIONS 17
VI. CONTRACTOR'S PROPOSAL SUBMITTAL 18
VII. PUBLIC ENTITY CRIMINAL AFFIDAVIT 19
VIII. NON-COLLUSION AFFADAVIT 21

I. INVITATION

The City of St Pete Beach has issued this Request for Proposal (RFP) to solicit competitive bids and proposals from Proposers for Wastewater System Rehabilitation Services, including manhole rehabilitation, pipe lining and point repairs.

The proposed work will be located within the City of St. Pete Beach in Pinellas County, FL, throughout the entire wastewater collection and transmission system. Each asset to be rehabilitated and the type of rehabilitation required will be identified in each individual Work Order with the location shown on corresponding geographical exhibits.

The successful proposer shall furnish all labor, superintendence, materials, power, light, heat, fuel, water, tools, appliances, equipment, supplies, shop drawings, working drawings and other means of construction necessary or proper for performing and completing the work. The Contractor is responsible for obtaining all required permits necessary for the work, including all applications and review fees, other than those permits which may have already been obtained. The Contractor shall perform and complete the work in a speedy and efficient manner consistent with safety of life and property and to the city's satisfaction, and in strict accordance with the Contract Documents. The Contractor shall repair or restore all structures and property damaged or disturbed during performance of the work.

The types of projects include:

- **Wastewater System Manhole Rehabilitation (Manhole Project):**
  The Contractor shall furnish all labor, material, equipment, and services necessary for manhole rehabilitation. The work shall be completed at various locations through the City's wastewater service area and shall include, but is not limited to, maintenance of traffic, temporary by-pass pumping and/or diversion of wastewater, cleaning, removal and disposal of all sand, rubble, deposits, and other accumulated debris, re-building manhole bench and channels, ring (frame) and cover adjustment and replacement, pavement restoration, inflow/infiltration elimination, surface preparation, cementitious and polymer coatings installation, internal chimney sealing, manhole cover insert installation, testing, project site cleanup and restoration, and all other incidentals as required and directed by the Engineer to complete the work.
- **Wastewater System Pipe Lining (Lining Project):**
  The Contractor shall furnish all labor, material, equipment, and services necessary for wastewater pipe rehabilitation using Cured-In-Place-Pipe (CIPP) lining. The work shall be completed at various locations through the City's wastewater service area and shall include, but is not limited to, maintenance of traffic, temporary by-pass pumping and/or diversion of wastewater, cleaning, removal and disposal of all sand, rubble, deposits, and other accumulated debris, CIPP liner installation, reconnection of service laterals, testing of CIPP liners, project site cleanup and restoration, and all other incidentals as required and directed by the Engineer to complete the work.
- **Wastewater System Point Repairs (Point Repair Project):**
  The Contractor shall furnish all labor, material, equipment, and services necessary for wastewater point repairs. The work shall be completed at various locations throughout the City's wastewater service area and shall include, but is not limited to, maintenance of traffic, temporary by-pass pumping and/or diversion of wastewater, dewatering, directional drilling, jack and boring, remove unsuitable materials below trench grade, sanitary sewer gravity and force main installation, force main and gravity main connections, remove out of service gravity and force mains, install manhole connections, grout out of service pipe, install valves and associated appurtenances, project site cleanup and restoration, and all other incidentals as required and directed by the Engineer to complete the work.

CONTACT INFORMATION
Procurement Manager – Sara Spain
Email – purchasing@stpetebeach.org

II. STATEMENT OF WORK AND TECHNICAL SPECIFICATIONS

See attached Technical Specifications Word document.

III. BID FORM

See attached Bid Form Excel document.

IV. GENERAL CONTRACT TERMS

REQUEST FOR PROPOSALS
Wastewater System Rehabilitation Services

REQUEST FOR PROPOSAL SUMMARY
The City of St Pete Beach has issued this Request for Proposal (RFP) to solicit competitive bids and proposals from Proposers for Wastewater System Rehabilitation Services, including manhole rehabilitation, pipe lining and point repairs.

The successful bidder shall provide all labor, materials, equipment, tools, consumables, transportation, and incidentals to provide Public Services capital improvement projects construction services on an 'as needed' basis for the City of St Pete Beach.

The "City" intends to **award multiple contracts** to vendors who can provide the best value for services. Vendors may submit proposals for all, some, or only one of the categories. **It is not mandatory to submit a proposal for every item listed**. A bidder may bid on any, all, or none of the items. The "City" reserves the right to select multiple vendors to optimize cost-efficiency and capability across different segments of the project. Proposals will be evaluated based on capability, cost, and capacity to perform the specific line items requested.

PROPOSAL SUBMITTALS
Proposal documents must include a signed/notarized Contractor's Proposal Submittal, Bid Form, References, Contractor's license and insurance certificates, and Public Entity Criminal Affidavit. The Contractor shall submit electronic proposals only. Bidders must submit electronically only through Bonfire platform. When bidding electronically, only one copy should be submitted.

Proposals shall include the following:

- A signed and notarized Proposer's Contract Proposal.
- Current proof of insurance certificate.
- A list of references and minimum qualifications as outlined in Section V.
- One copy of bid electronically submitted to Bonfire platform.

The City is not responsible for any Addendums or other supplementary information that is not received due to non-submittal of the aforementioned information. Please refer back to the city website (http://www.stpetebeach.org/news-and-links/city-projects.html) for additional project information as it becomes available. The City reserves the right to decide whether to answer addendums or not. The City is not required to provide any additional information.

Proposers or persons wishing to submit a proposal on this project shall be licensed, and insured in accordance with the City's requirements

The City of St. Pete Beach reserves the right to reject any or all proposals or parts of proposals, or accept any proposal or part thereof deemed to be in the best interests to the City of St. Pete Beach.

Electronic proposals must be submitted by **9:00 AM on April 08, 2026 (Deadline),** clearly marked as: **"Wastewater System Rehabilitation Services."**

PRE-PROPOSAL MEETING
An optional pre-proposal meeting will be held on **March 18, 2026 at 11:00 AM EST** via Microsoft Teams conference/Teleconference. Please contact the City's Procurement Manager (purchasing@stpetebeach.org) for a meeting invitation and instructions.

WRITTEN REQUESTS FOR INTERPRETATIONS/CLARIFICATIONS
No oral interpretations will be made to any firms as to the meaning of the scope of work or any other contract documents included in this **RFP.** All questions pertaining to the terms and conditions or scope of work of this Request for Proposal **(RFP)** must be sent in writing via email only to the City Procurement Manager (purchasing@stpetebeach.org) and shall be received no later than **10:00 AM EST on March 25, 2026.** Responses to questions may be handled as an Addendum if the response would provide clarification to the requirements of the **RFP**. All such Addenda shall become a part of the contract documents. The City will not be responsible for any other explanation or interpretation of the proposed **RFP** made or given prior to the award of the contract. The City will not respond to questions received after the specified deadline. The City reserves the right to respond to any and all questions but is not required to do so. If the Proposer discovered the opportunity through the online platform (Bonfire), do not submit questions through these platforms. **Only questions emailed directly to the City Procurement Manager will be answered.**

BEGINNING DATE
The Proposer shall, within ten (10) business days after receipt of the Notice of Award and before commencement of any operations hereunder, execute the Agreement. Additionally, the Proposer shall, within twenty (20) business days after receipt of the Notice of Award, provide all required documentation to the City.

COMPLETION OF WORK
The work will be completed on an as-needed basis. Each location that needs to be surveyed, repaired and/or worked on will constitute it's own "job". This will be a three (3) year initial contract with the option to be extended for two (2) additional one (1) year periods upon mutual consent of both parties. It is the intent of the City of St Pete Beach to award these services to more than one Contractor/Vendor.

COSTS INCURRED BY PROPOSERS
All expenses involved with the preparation and submission of proposals to the City, or any work performed in connection therewith, shall be borne solely by the Proposers. No payment will be made for any responses received or for any other effort required of or made by; the Proposer's prior to contract commencement.

ORAL PRESENTATION
The City may require an oral presentation of the proposal at the Evaluation Committee's discretion. This could also include a formal interview of any and all members of the Proposer's contract management staff.

CONFLICT OF INTEREST
The Proposer represents that it presently has no interest and shall acquire no interest, either direct or indirect, which would conflict in any manner with the performance or services required hereunder, as provided for in FL Stat. 112.311. The Proposer further represents that no person having any interest shall be employed for said performance.

The Proposer shall promptly notify the City's representative, in writing, by certified mail, of all potential conflicts of interest for any prospective business association, interest, or other circumstance, which may influence or appear to influence the contractor's judgment or quality of services being provided hereunder. Such written notification shall identify the prospective business association, interest or circumstance, the nature of work that the Proposer may undertake and request an opinion of the city as to whether the association, interest or circumstance would, in the opinion of the City, constitute a conflict of interest if entered into by the Proposer. The City agrees to notify the Proposer of its opinion by certified mail within thirty days of receipt of notification by the Proposer.

LATE PROPOSAL OR MODIFICATIONS
Modifications in writing received prior to the time set for the proposal submittal will be accepted. Proposal modifications received after the time set for the proposal submittal will not be considered.

RELATED PARTIES AND MULTIPLE PROPOSALS
Where two (2) or more related parties each submit a proposal or multiple proposals are received from (1) Proposer, for any such contract, such proposals shall be judged non-responsive. Related parties mean Proposers or the principles thereof, which have a direct or indirect ownership interest in another Proposer for the same contract or in which a parent company or the principles thereof where one (1) Proposer has a direct ownership interest in another Proposer for the same contract.

RIGHT TO AUDIT
The City of St. Pete Beach reserves the privilege of auditing a Proposer's record as such records relate to purchases or work between the City and said Proposer. Records should be maintained for three years from contract date.

VARIANCE FROM STANDARD TERMS & CONDITIONS
All standard terms and conditions stated throughout the RFP apply to this contract except as specifically stated. This should be fully understood by Proposers prior to submitting a proposal.

ASSIGNMENT
The Proposer shall perform this contract. No assignment or subcontracting shall be allowed without prior written consent of the City. If a Proposer intends to subcontract a portion of this work, the Proposer must disclose that intent in the proposal. In the event of a corporate acquisition and/or merger, the Contractor shall provide written notice to the City within thirty (30) business days of Proposer's notice of such action or upon the occurrence of said action, whichever occurs first. The right to terminate this contract, which shall not be unreasonably exercised by the City shall include but not be limited to, instances in which a corporate acquisition and/or merger represent a conflict of interest or are contrary to any local, state, or federal laws. Action by the City awarding a proposal to a firm that has disclosed its intent to assign or subcontract in its response to the RFP, without exception shall constitute approval for purpose of this Agreement.

LOBBYING Lobbying of Evaluation Committee members, City employees, or elected officials regarding request for proposals, request for qualifications, bids or contracts, during the pendency of bid award or bid protest, by the bidder/proposer/protestor or any member of the bidder's/proposer's/protestor's staff, an agent of the bidder/proposer/protestor, or any person employed by any legal entity affiliated with representing an organization that is responding to the request for proposal, request for qualification, bid or contract, or has a pending bid protest is strictly prohibited either upon advertisement or on a date established by the City and shall be prohibited until either an award is final or the protest is finally resolved by the City Manager or Procurement Manager; provided, however, nothing herein shall prohibit a prospective bidder/proposer from contacting City departments to address situations such as clarification and/or questions related to the procurement process. For purposes of this provision, lobbying activities shall include but not be limited to, influencing or attempting to influence action or non-action in connection with any requests for proposal, request for qualification, bid or contract through direct or indirect oral or written communication or an attempt to obtain goodwill of persons and/or entities specified in this provision. Such actions may cause any request for proposal, request for qualification, bid or contract to be rejected.

ADDITIONAL REQUIREMENTS
The City reserves the right, by change order, to unilaterally add or delete locations/services, either collectively or individually, at the City's sole option, at any time after award has been made as may be deemed necessary or in the best interest of the City. In such case, the Proposer will be required to provide or reduce services to this contract in accordance with the terms, conditions, and specifications.

SERVICES AGREEMENT
A written agreement incorporating the RFP and the successful proposal will be prepared by the City, signed by the successful Proposer, and presented to the City Commission for approval and signature.

INTEGRITY OF REQUEST FOR PROPOSAL DOCUMENTS
Proposers shall use the original RFP forms provided within the RFP and enter information in the spaces where a response is requested. Proposers may use an attachment as an addendum to the RFP forms if sufficient space is not available on the original form for the Proposer to enter a complete response. Any modifications or alterations to the original RFP documents by the Proposer, whether intentional or otherwise, will constitute grounds for rejection of the RFP. Any such modifications or alterations a Proposer wishes to propose must clearly be stated in the Proposer's RFP response and presented in the form of an addendum to the original RFP documents.

RESPONSIBILITY OF THE CITY MANAGER OR DESIGNEE
The term "City Manager or designee" wherever used in this Contract shall be the City of St. Pete Beach or its duly authorized representative. Notices of any change in the City Manager or designee shall be given in writing by the City to the Contractor. The City Manager or designee shall have full authority to interpret the contract and requirements and shall determine acceptance of the work under this Contract and every question relative to the fulfillment of the terms and provisions therein. It shall be the duty of the City Manager or designee to enforce the contract terms in a fair and unbiased manner.
If a variation from any requirements is allowed, the City Manager or designee shall grant the same in writing with the reasons for his action outlined, and such action will not invalidate or change the Contract in any other manner.

EXAMINATION OF SITE
Proposer shall carefully examine project site and be familiar with the work required for the project, investigate all site conditions that may affect execution of work as detailed in the construction documents. Contact the City's Procurement Manager or their designee for changes or alterations before proceeding.

ASSURANCES
The responding Proposer shall provide a statement of assurance that the Proposer is not presently in violation of any statutes or regulatory rules that might have an impact on the firm's operations. All applicable laws and regulations of the State of Florida, and ordinances and regulations of the City of St. Pete Beach will apply.

ASSIGNMENT AND TRANSFER OF CONTRACT
The Proposer shall not assign or transfer this Agreement or any part thereof or any interest therein without consent in writing of the City and the Proposer's Surety, and any such assignment or transfer without such written consent shall be null and void.

SUBCONTRACTS
The Proposer shall not subcontract this Agreement or any part thereof or any interest therein without consent in writing of the City and the Proposer's Surety. Any Subcontractor approved by the City will be subject to the same standards and qualifications as stated in this Contract.

PAYMENT
Payment shall be made to the Proposer for work performed under this Contract for the quantities of work as determined in accordance with Payments for Work Completed and Payments Withheld of this Contract. Payment for extra work will be made in accordance with the Changes in Work, Contract Amount, and Contract Time sections below.

PERIOD OF PERFORMANCE
The target completion for the base Scope of Services is January 2027, corresponding to delivery of the Design-Build Readiness Package. The City reserves the right, at its sole discretion and subject to funding

availability, to amend this Agreement to extend the Consultant's services through final (100%) design. Any additional services shall be authorized by written amendment and negotiated in accordance with the Consultants' Competitive Negotiation Act (Section 287.055, Florida Statutes).

CHANGES IN THE WORK

Without invalidating the Contract, the City may, at any time or from time to time, order additions, deletions or revisions in the work authorized by written Change Orders or directives. Upon receipt of a Change Order, the Proposer will proceed with the work involved. All such work shall be executed under the applicable conditions of the Contract documents. If any Change Order causes an increase or decrease in the Contract Amount or any extension or shortening of the Contract Time, an equitable adjustment will be made.

Additional Work performed by the Proposer without authorization of a Change Order will not entitle them to an increase in the Contract Amount or any extension of the Contract Time, except in the case of an emergency (subject to approval by City Manager or designee).

It is the Proposer's responsibility to notify their Surety of any changes affecting the general scope of the Work or change of the Contract Amount and the amount of the applicable bonds shall be adjusted accordingly, and an amended bond document furnished to the City. In the event the City directs the Proposer to make a change in the Work, and if the City and the Proposer do not arrive at a mutually acceptable increase or decrease in the Contract Amount, the Proposer shall not use any such lack of mutual acceptance as a basis or cause to stop or otherwise delay the progress or the execution and completion of any of the work ordered, directed or required pursuant to the Contract Documents.

If the Proposer believes an event or situation has occurred which justifies a change in the Contract Amount or Contract Time, they shall deliver a written notice to the City Manager or designee. Each such written notice shall be delivered promptly and no later than fifteen (15) business days after the Proposer first discovered the occurrence. The Proposer shall be deemed to have waived the right to collect any and all costs incurred more than fifteen (15) business days prior to the date of delivery of the written notice and shall be deemed to have waived the right to seek an extension of the Contract Time with respect to any delay in the Progress Schedule which accrued more than fifteen (15) business days prior to the date of delivery of the written notice.

Any such notice shall include sufficient detail to explain the basis of entitlement to a claim for an adjustment to the Contract Amount of Contract Time. When requested by the City Manager or designee, the Proposer shall furnish any additional information and details as may be required to determine the facts or allegations involved, which shall be provided within fifteen (15) business days of the request unless a longer time period is allowed by the City Manager or designee.

The Proposer shall prepare proposals detailing proposed adjustments to Contract Amount and/or Contract Time and submit them to the City Manager or designee within fifteen (15) business days of the City's issuance of a proposed Change Order or the Proposer's submitting a written notice of a change or claim for an adjustment to the Contract Amount or Contract Time. Proposer's proposals shall be irrevocable for a period of at least sixty (60) business days after receipt by the City. Any delay in the submittal of a complete, adequate and acceptable proposal will not justify an increase in Contract Amount or Contract Time. Proposer agrees that it shall give the City access to any and all of Proposer's and Subcontractors' books, records and other materials relating to proposed Change Orders and other claims for adjustment to Contract Amount or Contract Time.

CHANGE OF CONTRACT AMOUNT

The Contract Amount constitutes the total compensation payable to the Proposer for performing the Work. All duties, responsibilities and obligations assigned to or undertaken by the Proposer shall be at his expense

without change in the Contract Amount. The Contract Amount may only be changed by written Change Order issued by the City. Any claim for an increase in the Contract Amount shall be in writing and delivered to the City Manager or designee within fifteen (15) business days of the occurrence of the event giving rise to the claim.

All claims for adjustment in the Contract Amount shall be determined by the City Manager or designee. However, no claim for an adjustment to the Contract Amount will be considered for unforeseeable causes that were beyond the fault or negligence of the Proposer or his Subcontractors or supplier such as acts of God, floods, riots, etc. This restriction does not restrict submission of claims for additional Contract Time due to events of this nature. Any change in the Contract Amount shall be incorporated in a Change Order.

Proposer proposals or claims shall cover all aspects of the Work involved and shall be fully documented and itemized as to all costs, quantities and charges for overhead and profit. Amounts for Subcontractors or Suppliers at any tier shall be similarly supported. When determining Subcontractors' costs, the methods to be used shall be those used for the Proposer's costs, except that the term "Subcontractor" shall replace the term "Proposer," context permitting.

The value of any Work covered by a Change Order or of any claim for an increase or decrease in the Contract Amount where the Work involved is covered by unit prices contained in the Contract Documents shall be determined by application of unit prices to the quantities of the items involved. If the quantities originally contemplated are so changed in a proposed Change Order, that application of the Unit Prices to the quantities proposed will cause substantial inequity to the City or the Proposer, the applicable unit price(s) shall be equitably adjusted by mutual agreement.

If the value of work covered by a Change Order cannot be established or mutually agreed to utilizing previously established unit rates, the value shall be determined by the City on the basis of an estimate of the out-of-pocket cost and percentages that are acceptable to the City for overhead and profit.

In such case, the Proposer will submit in the form prescribed by the City an itemized cost breakdown together with supporting data.

The amount of credit to be allowed by the Proposer to the City for any such change which results in a net decrease in cost, will be the amount of the actual net decrease as determined by the City. When both additions and credits are involved in any one change, the combined overhead and profit shall be figured on the basis of the net increase, if any.

CHANGE OF CONTRACT TIME

The Contract Time may only be changed by written Change Order. Any claim for an extension in the Contract Time shall be in writing and include an analysis of the Progress Schedule as further described in the Specifications and shall be delivered to the City Manager or designee within fifteen (15) business days of the occurrence of the event giving rise to the claim. All claims for adjustment in the Contract Time shall be determined by the City Manager or designee. Any change in the Contract Time resulting from any such claim shall be incorporated in a Change Order. The Contract Time may be extended for an amount equal to time lost due to unforeseeable causes beyond the control of the Proposer (and his Subcontractors and Suppliers) if he makes a claim therefrom. Such delays shall include, but not be restricted to, acts or neglect by any separate Proposer employed by the City; fires; floods; labor disputes; epidemics; or acts of God.

All time limits stated in the Contract Documents are of the essence to the Contract. The stated time limits are agreed to be adequate to complete the work, including the procurement, manufacture and delivery of all material and equipment required, and account for any and all potential impact, delays, disruptions and costs that may be expected.

PAYMENTS FOR WORK COMPLETED
All payments under this agreement shall comply with the requirements of Florida Statutes, Section 215.422, commonly referred to as the "Prompt Payment Law." This includes timely processing of invoices and adherence to statutory interest provisions for late payments. The Contractor shall submit detailed invoices for services rendered under this agreement. Each invoice must include: Purchase Order or Contract Number, Description of services provided, Dates of service, Total amount due. Payment will be made within 45 days of receipt of a proper invoice and acceptance of deliverables, as required by Florida law. If payment is not made within the statutory timeframe, interest penalties will apply in accordance with Section 215.422, Florida Statutes. Payments will be issued via electronic funds transfer (EFT) unless otherwise agreed in writing. Contractor must provide accurate banking information to facilitate EFT.

PAYMENTS WITHHELD
The City Manager or designee may withhold, or, on account of subsequently discovered evidence, nullify the whole or part of any estimate to such extent as may be necessary to protect the City from loss on account of:

a) Defective work not remedied

b) Claims and/or liens filed or reasonable evidence indicating probable filing of claims

c) Failure of the Proposer to make payments properly to Subcontractors or for labor

d) A reasonable doubt that the Contract can be completed for the balance then unpaid

e) Damage to another Proposer

f) Failure of the Proposer to keep their work progressing in accordance with their time schedule

FINAL PAYMENTS
Upon the completion and acceptance of the work, the City Manager or designee shall issue a certificate that designates that the whole work provided for in this Contract has been completed and accepted by him under the conditions and the terms thereof and shall make the final estimate of the work. After issuance of the certificate, the entire balance found to be due the Proposer, including said retained percentage by the City in accordance with existing state laws as may be retained lawfully by said City, shall pay excepting such sums to the Proposer.

Before the approval of the final payment, the Proposer shall submit evidence satisfactory to the City that states that all payrolls, materials, bills and outstanding indebtedness in connection with this Contract have been paid.

LIENS
If at any time there shall be evidence of any lien or claim for which the City might become liable and which is chargeable to the Proposer, the City shall have the right to retain out of any payment then due or thereafter to become due, an amount sufficient for complete indemnification against such lien or claim. In the event the City has already paid to the Proposer all sums due under this contract or the balance remaining unpaid is insufficient to protect the City, the Proposer and his Surety shall be liable to the City for any loss so sustained.

RESPONSIBILITY OF THE CITY MANAGER OR DESIGNEE
The term "City Manager or designee" wherever used in the Contract shall be the City of St. Pete Beach or its duly authorized representative. Notices of any change in the City Manager or designee shall be given in writing by the City to the Proposer. The City Manager or designee shall have full authority to interpret the Plans and Specifications and shall determine the amount, quality, and acceptance of the work and supplies

to be paid for under the Contract and every question relative to the fulfillment of the terms and provisions therein. It shall be the duty of the City Manager or designee to enforce the Plans and Specifications in a fair and unbiased manner. If a variation from any requirements is allowed the City Manager or designee shall grant the same in writing with the reasons for his action outlined, and such action will not invalidate or change the Contract in any other manner.

LICENSES AND PERMITS

The Proposer shall obtain and pay for all necessary City licenses and work permits and shall faithfully comply with all laws, ordinances and regulations, (Federal, State or local) which may be applicable to the operations to be conducted hereunder, except for those permits obtained by the City. Notwithstanding the provisions above, the Proposer is responsible for non-compliance of all permit requirements, including all fines resulting from Proposer's non-compliance of said requirements.

Chapter II, Section II-4, "Registration of Licenses Obtained From Other Municipalities:" "Persons, partnerships, corporations, or other business entities doing business with the City who are not required to obtain a City occupational license, but who must have either a State or County or Municipal occupational license from another municipality, shall register such occupational license with St. Pete Beach Community Development Department. The City may charge a fee for such registration." The Proposer shall be responsible for obtaining all City, County, State and Federal permits required by those government agencies and must provide documentation of receipt of those permits prior to project commencement. This shall include a notice to commence work letter and the applicable fee, if required. Any sub-contractor hired by the Proposer awarded the project, MUST also register their license with the City.

LABOR PROVISIONS

The Proposer and his Subcontractors shall discharge, whenever ordered to do so by the City Manager or designee, any employee who is disorderly or whose conduct in the opinion of the City Manager or designee is detrimental to the prosecution of the work. No person whose age or physical condition is such as to make this employment dangerous to his/her health and safety or to the health and safety of others shall be employed on the work, and in no event shall any persons under the age of sixteen (16) years be employed. The State of Florida prevailing wage law requires that the Proposer shall fully comply with all provisions contained in Section 215.19, "Schedule of Prevailing Wage Rates for Specified Public Construction." The wage rates set forth by such determination shall apply to this project.

INSURANCE

The Proposer shall procure and maintain at his/her own expense, during the life of the Contract, liability insurance as hereinafter specified. All such insurance shall be subject to the approval of the City for adequacy of protection and shall include a provision preventing cancellation without twenty (20) business days prior notice to the City in writing. The City shall be included as an additional insured on all liability insurance. The liability insurance required is as follows: Proposer's General Public Liability and Property Damage Insurance issued to the Proposer and protecting the Proposer from all claims for personal injury, including death, and all claims for destruction of or damage to property, arising out of or in connection with any operations under this Contract, whether such operations be by the Proposer or by any Subcontractor hired by the Proposer or anyone directly or indirectly employed by the Proposer or hired by the Proposer.

The successful Proposer shall supply and maintain insurance which defends, indemnifies and holds harmless the City of St. Pete Beach, its officers, employees and agents from and against any and all liability, damage claims, demands, costs, judgments, fees, attorney's fees or loss arising directly out of acts or omissions hereunder by the Proposer or third party under the direction or control of the Proposer. Such general and excess liability coverage shall be primary to any other coverage carried by the City of St Pete Beach. Proposer must furnish the City with Certificate of Insurance prior to commencement of work. An

approved Certificate of Insurance furnished by the Proposer's carrier to guarantee the Proposer being insured with the City of St Pete Beach must be named as a certificate holder for this contract. The following minimum coverage:

- Professional Liability Insurance $2,000,000 each occurrence.
- Commercial General Liability Insurance $1,000,000.00.
- Comprehensive General Liability Insurance of $1,000,000.00 each occurrence.
- Personal Injury for $1,000,000.00 each occurrence.
- Automobile Liability $1,000,000.00.
- General Workers Compensation Insurance as required by Florida law.
- Longshore Harbor Workers Compensation Insurance

PROTECTION OF WORK AND PROPERTY
The Proposer shall continuously maintain adequate protection of all their work and materials from damage or theft and shall protect the City's property and all adjacent property from injury or loss arising in connection with activities under their Contract. The Proposer shall make good any such damage, injury, or loss, except such as may be caused by agents or employees of the City.

The Proposer shall take, use, provide, and maintain all necessary precautions, safeguards, and protection to prevent accidents, or injury to persons or property on, about, or adjacent to the site of the work. Should the situation arise that physical security is needed the Proposer will provide security on off days and holidays. The Proposer shall be responsible for all charges incurred with such action.

The Proposer shall post danger signs warning against any hazards created by the work being done under their Contract. They shall designate a responsible member of their organization on the work, whose duty shall be the prevention of accidents, and the name of the person so designated shall be reported to the City Manager or designee and City in writing. In an emergency affecting the safety of life, or of the work or adjoining property, the Proposer, without special instruction or authorization from the City Manager or designee, or City, is hereby permitted to act, at their own discretion, to prevent such threatened loss or injury, and they must take such action if so instructed or authorized by the City Manager or designee. The Proposer shall also protect adjacent property as required by law.

PROPOSAL REVIEW AND CONTRACT AWARD
Failure to submit all documents requested at the time of proposal may deem the Proposer's proposal ineligible for award. The City of St. Pete Beach reserves the right to reject any or all proposals or parts of proposals. The contract shall be awarded by written notice to the responsible and responsive Contractor whose proposal is determined in writing to be the most advantageous to the City, taking into consideration the price and other criteria set forth in this request for proposals. The City may waive any informality.

LOCAL, STATE AND FEDERAL COMPLAINCE REQUIREMENTS
The laws of the State of Florida do apply to any purchase made under this Request for Proposal. Proposers shall comply with all local, state, and federal directives, orders and laws as applicable to their proposal and subsequent contracts include but not limited to Equal Employment Opportunity, Minority Business Enterprise, and OSHA as applicable to this contract.

Compliance with Fla. Stat. 448.095:

- Proposer agrees to comply with all applicable portions of Fla. Stat. 448.095. Proposer must use the

U.S. Department of Homeland Security's E-Verify System, hhtps://e-verify.uscis.gov/emp, to verify the employment eligibility of all employees hired on or after January 1, 2021 during the term of this Agreement.

- Subcontractors (i) Proposer shall also require all subcontractors performing work under this Agreement to use the E-Verify system for any employees they may hire during the term of this Agreement. (ii) Subcontractors shall provide Proposer with an affidavit stating the subcontractor does not employ, contract with, or subcontract with an unauthorized alien, as defined by Fla. Stat. 448.095 (iii) Proposer shall provide a copy of such affidavit to the City upon receipt and shall maintain a copy for the duration of the Agreement.

- Proposer must provide evidence of compliance with Fla. Stat. 448.05 by January 1, 2021. Evidence may consist of, but is not limited to, providing notice of Proposer's E-Verify number.

- Failure to comply with this provision is a material breach of the Agreement, and the City may choose to terminate the Agreement at its sole discretion. Proposer may be liable for all costs associated with the City securing the same services, inclusive, but not limited to, higher costs for the same services and proposal costs (if necessary). Any challenge to termination under this provision must be filed in the Circuit Court no later than 20 calendar days after the date of termination. If this agreement is terminated for a violation of the statute by the Proposer, the Proposer may not be awarded a public agreement for a period of 1 year after date of termination.

RESERVES THE RIGHT

The City reserves the right to accept or reject any and/or all proposals, to waive irregularities and technicalities, and to request re-submission. If only one proposal is received by the proposal date and time listed, the proposal may or may not be rejected by the City depending upon proposal review and the needs of the City.

The City reserves the right to select a firm with or without additional interviews and may decide to select any of the firms submitting proposals. The City reserves the right to award the contract to a responsible proposer submitting a responsible proposal, with a resulting negotiated agreement which is most advantageous and in the best interest of the City.

Proposers, Proposers, their agents, and associates shall not contact or solicit any City Commission member, City employee, or official regarding this RFP during any phase of the proposalding process. Failure to comply with the provision may result in disqualification of the Proposer, at the option of the City. Only that individual listed, or an approved designee, as the contact person for this RFP shall be contacted.

SUBMITTAL WITHDRAWAL

After submittals are opened, corrections or modifications to submittals are not permitted, but a responding firm may be permitted to withdraw an erroneous submittal prior to the award by the City Commission, if the following is established:

- That the responding firm acted in good faith in submitting the submittal;
- That in preparing the submittal there was an error of such magnitude that enforcement of the submittal would work severe hardship upon the respondent;
- That the error was not the result of gross negligence or willful inattention on the part of the respondent;
- That the error was discovered and communicated to the City within twenty-four (24) hours of submittal opening, along with a request for permission to withdraw the submittal; or
- The responding firm submits documentation and an explanation of how the error was made.

CONE OF SILENCE
Respondents to this solicitation or persons acting on their behalf may not contact, between the release of the solicitation and the end of the 72-hour period following the agency posting the notice of intended award, excluding Saturdays, Sundays, and state holidays, any employee or officer of the executive or legislative branch concerning any aspect of this solicitation, except in writing to the procurement officer or as provided in the solicitation documents. Violation of this provision may be grounds for rejecting a response.

TERMINATION
The resulting contract may be canceled by the City when:

- Sufficient funds are not available to continue its full and faithful performance of this contract.
- There is sub-standard or non-performance of contract.
- The City wishes to terminate at any time and for any reason, upon giving thirty (30) days prior written notice to the other party.

The resulting contract may be canceled by either party in the event of substantial failure to perform in accordance with the terms by the other party through no fault of the terminating party.

FISCAL NON-FUNDING

If funds for the requested services described herein are not appropriated via the annual budget adoption process, the City reserves the right to cancel this Agreement immediately upon written notice to the vendor.

PROJECT RECORDS
The awarded firm shall maintain auditable records concerning the procurement to account for all receipts and expenditures, and to document compliance with the Contract. These records shall be kept in accordance with generally accepted accounting methods, and the City of St. Pete Beach reserves the right to determine the record-keeping method in the event of non-conformity. These records shall be maintained for three (3) years after final payment has been made and shall be readily available to City personnel with reasonable notice, and to other persons in accordance with the Florida Public Disclosure Statutes. Additionally, the awarded firm shall abide by and comply with Florida Statutes regarding public records. Specifically, the firm shall be aware of the provisions found in Section 119.0701, Florida Statutes.

Upon completion of the project, all reports, studies, recommendations, forms, and other project specific information will need to be submitted in paper and in an electronic file format (.PDF, .JPEG) on CD or USB storage device.

V. REFERENCES & MINIMUM QUALIFICATIONS

Provide at least three (3) or more professional, business references with which you have contracted to provide similar services in the past five (5) years. Include the name of the person, its organization, telephone number, fax number, and e-mail address. Include any governmental agencies, with the same contact and descriptive information for which you have provided similar service within the past five (5) years.

Provide a brief description of the history and capabilities of the firm. Describe the types of projects or services the firm performs/has performed and the dollar value of each. Provide information regarding your firm's ability to complete this project. Demonstrate that the firm's personnel have experience with similar projects.

Identify all unresolved and ongoing claims and disputes against your firm in excess of $500,000. Include any claims against the principals of your firm or any claims your company may have against a third party. Provide a history of litigation, including the outcomes, for the past five (5) years.

The responding firm shall provide a statement of assurance that the firm is not presently in violations of any statutes or regulatory rules that might have an impact on the firm's operations. All applicable laws and regulations of the State of Florida and ordinances and regulations of the City of St. Pete Beach will apply.

Provide the overall bonding capacity for the company and provide a history of any claims against the Proposer's previous bonds for the past five (5) years.

The City shall be the sole final judge of qualifications of Proposer to perform service and reserves the exclusive right to accept or reject any proposal as it deems to be in the best interests of the City. The City reserves the right to make such investigation, as it deems necessary, to determine the ability of any proposer to perform the work or service requested. Failure to comply with the requirements of this section may be grounds for rejecting a response.

VI. CONTRACTOR'S PROPOSAL SUBMITTAL

The company that is submitting a proposal declares that it has extensive experience in Wastewater System Rehabilitation Services, including manhole rehabilitation, pipe lining and point repairs.

The undersigned, as Proposer, hereby declares that the only person or persons interested in the Proposal as principal or principals are named herein, and that no person other than herein mentioned has any interest in the Proposal or in the Agreement to be entered into; that this Proposal or Agreement is made without connection with any other person, company, or parties making a Proposal; and that it is in all respects fair and in good faith without collusion or fraud.

The Proposer further declares that they have examined the site of the work and informed themselves fully in regard to all conditions pertaining to the place where the work is to be done; that they have examined the Plans and Specifications for the work and Contract Documents relative thereto, and have read all special provisions furnished prior to the opening of proposals; and that they have satisfied themselves relative to the materials to be supplied and work to be performed.

The Proposer proposes and agrees, if the Proposal is accepted, to contract with the City of St. Pete Beach, Florida, in the form of an Agreement specified for **"Wastewater System Rehabilitation Services"** in St. Pete Beach, Florida, in full and complete accordance with the shown, noted, described, and reasonably intended requirements of the Plans, Specifications, and Contract Documents, to the full and entire satisfaction of the City of St. Pete Beach, Florida.

The successful Proposer shall be required to utilize the template Agreement in this Request for Proposals (RFP) and any questions regarding the Agreement must be addressed during the RFP process before submittal. The City reserves the right to respond or not respond to questions in the form of an addendum.

The Proposer proposes to furnish all materials, equipment, labor, and perform the work submitted in their proposal schedule for the City of St. Pete Beach **"Wastewater System Rehabilitation Services."**

COMPANY:_____ DATE: _____

ADDRESS:_____ PHONE:_____

PROPOSER: _____ NAME: _____

(SIGNATURE) (PRINT NAME & TITLE)

STATE OF FLORIDA
COUNTY OF _____

The foregoing instrument was sworn to (or affirmed), subscribed, and acknowledged before me by means of ☐ physical presence or ☐ online notarization, this _____ day of _____, 2026, by_____, who is personally known to me or has produced _____ as identification.

(SEAL)

_____
Notary Public – State of Florida

_____
(Print, Type, Stamp, or Commissioned Name of Notary Public)

SUBMIT PROPOSAL TO: Electronically via Bonfire only

VII. PUBLIC ENTITY CRIMINAL AFFIDAVIT

SWORN STATEMENT – PUBLIC ENTITY CRIMES

PURSUANT TO § 287.133 (3)(a), FLORIDA STATUTES, ON PUBLIC ENTITY CRIMES
THE FORM MUST BE SIGNED AND SWORN TO IN THE PRESENCE OF A NOTARY PUBLIC OR OTHER OFFICIAL AUTHORIZED TO ADMINISTER OATHS.

1. This sworn statement is submitted to: City of St. Pete Beach

   by: _____
   (Print individual's name and title)

   for: _____
   (Print name of entity submitting sworn statement)

   at: _____
   (Business address)

   and (if applicable), its Federal Employer Identification Number (FEIN):

   _____
   (FEIN)
   or, if the entity has no FEIN, include the Social Security Number:

   _____
   (SSN)

   by the individual signing this sworn statement: _____
   (Signature)

2. I understand that a "public entity crime" as defined in § 287.133 (1)(g), Fla. Stat., means a violation of any State or Federal law by a person with respect to and directly related to the transaction of business with any public entity or with an agency or political subdivision of any other state or of the United States including, but not limited to, any proposal or contract for goods or services, any lease for real property, or any contract for the construction or repair of a public building or public work, involving antitrust, fraud, theft, bribery, collusion, racketeering, conspiracy, or material misrepresentation.

3. I understand that "convicted" or "conviction" as defined in § 287.133 (1)(b), Fla. Stat., means a finding of guilt or a conviction of public entity crime with or without an adjudication of guilt in any Federal or State trial court of record relating to charges brought by indictment or information after July 1, 1989, as a result of a jury verdict, non-jury trial, or entry of a plea of guilty or nolo contendere.

4. I understand that an "affiliate" as defined in § 287.133 (1)(a), Fla. Stat., means:
   a. A predecessor or successor of a person convicted of a public entity crime or
   b. An entity under the control of any natural person who is active in the management of the entity and who has been convicted of a public entity crime. The term "affiliate" includes those officers, directors, executives, partners, shareholders, employees, members, and agents who are active in the management of an affiliate. The ownership by one (1) person of shares constituting a controlling interest in another person or a pooling of equipment or income among persons when not for fair market value under the arm's length agreement, shall be a prima facie case that one (1) person controls another person. A person who knowingly enters into a joint venture with a person who has been convicted of a public crime in Florida during the preceding thirty-six (36) months shall be considered an

affiliate.

5. I understand that a "person" as defined in Section 287.133 (1)(e), Fla. Stat., means any natural person or any entity organized under the laws of any state or of the United States with the legal power to enter into a binding contract and which proposals or applies to proposal on contracts let by a public entity, or which otherwise transacts or applies to transact business with a public entity. The term "person" includes those officers, directors, executives, partners, shareholders, employees, members, and agents who are active in management of an entity.

6. Based on information and belief, the **statement which I have marked below is true** in relation to the entity submitting this sworn statement (indicate which statement applies).

☐ Neither the entity submitting this sworn statement, nor any of its officers, directors, executives, partners, shareholders, employees, members, or agents who are active in the management of the entity nor any affiliate of the entity has been charged with and convicted of a public entity crime subsequent to July 1, 1989.

☐The entity submitting this sworn statement or one (1) or more of its officers, directors, executives, partners, shareholders, employees, members, or agents who are active in the management of the entity or an affiliate of the entity has been charged with and convicted of a public entity crime subsequent to July 1, 1989.

☐The entity submitting this sworn statement or one (1) or more of its officers, directors, executives, partners, shareholders, employees, members, or agents who are active in the management of the entity or an affiliate of the entity has been charged with and convicted of a public entity crime subsequent to July 1, 1989. However, there has been a subsequent proceeding before a Hearing Office of the State of Florida, Division of Administrative Hearings and the Final Order entered by the Hearing Officer determined that it was not in the public interest to place the entity submitting this sworn statement on the convicted vendor list (attach a copy of the final order).

I UNDERSTAND THAT THE SUBMISSION OF THIS FORM TO THE CONTRACTING OFFICE FOR THE PUBLIC ENTITY IDENTIFIED IN PARAGRAPH 1 ABOVE IS FOR THE PUBLIC ENTITY ONLY AND THAT THIS FORM IS VALID THROUGH DECEMBER 31 OF THE CALENDAR YEAR IN WHICH IT IS FILED. I ALSO UNDERSTAND THAT I AM REQUIRED TO INFORM THE PUBLIC ENTITY PRIOR TO ENTERING INTO A CONTRACT IN EXCESS OF THE THRESHOLD AMOUNT PROVIDED IN SECTION 287.017, FLORIDA STATUTES, FOR CATEGORY TWO OF ANY CHANGE IN THE INFORMATION CONTAINED IN THIS FORM.

STATE OF FLORIDA
COUNTY OF _____

The foregoing instrument was sworn to (or affirmed), subscribed, and acknowledged before me by means of ☐ physical presence or ☐ online notarization, this _____ day of _____, 2026, by_____, who is personally known to me or has produced _____ as identification.

(SEAL)

_____
Notary Public – State of Florida

_____
(Print, Type, Stamp, or Commissioned
Name of Notary Public)

VIII. NON-COLLUSION AFFADAVIT

STATE OF _____ COUNTY OF _____

I state that **I**_____ of _____,
(Name and Title) (Name of Firm)

I am authorized to make this affidavit on behalf of my firm and its owner, directors and officers. I am the person responsible in my firm for the price(s) and amount(s) of this Response, and the preparation of the Response. I state that:

1. The price(s) and amount(s) of this Response have been arrived at independently and without consultation, communication or agreement with any other Provider, potential provider, Proposal, or potential Proposal.

2. Neither the price(s) nor the amount(s) of this Response, and neither the approximate price(s) nor approximate amount(s) of this Response, have been disclosed to any other firm or person who is a Provider, potential Provider, Proposal, or potential Proposal, and they will not be disclosed before Proposal opening.

3. No attempt has been made or will be made to induce any firm or persons to refrain from submitting a Response for this contract, or to submit a price(s) higher that the prices in this Response, or to submit any intentionally high or noncompetitive price(s) or other form of complementary Response.

4. The Response of my firm is made in good faith and not pursuant to any agreement or discussion with, or inducement from, any firm or person to submit a complementary or other noncompetitive Response.

5. _____, its affiliates, subsidiaries, officers, director, and employees (Name of Firm) are not currently under investigation, by any governmental agency and have not in the last three years been convicted or found liable for any act prohibited by State or Federal law in any jurisdiction, involving conspiracy or collusion with respect to Proposal, on any public contract, except as follows:

I state that I and the named firm understand and acknowledge that the above representations are material and important, and will be relied on by the State of Florida for which this Response is submitted. I understand and my firm understands that any misstatement in this affidavit is, and shall be treated as, fraudulent concealment from the State of Florida of the true facts relating to the submission of responses for this contract.

Name of Organization:_____ Signed By: _____

Print Name:_____

The foregoing instrument was sworn to (or affirmed), subscribed, and acknowledged before me by means of ☐ physical presence or ☐ online notarization, this _____ day of _____, 2026, by _____, who is personally known to me or has produced _____ as identification.

(SEAL)

_____
Notary Public – State of Florida

_____
(Print, Type, Stamp, or Commissioned
Name of Notary Public)

CONTRACT DOCUMENTS

TECHNICAL SPECIFICATIONS

FOR

St. Pete Beach
The Sunset Capital of Florida
PUBLIC SERVICES

CITY OF ST. PETE BEACH

SOLICITATION NAME:

Wastewater System Rehabilitation Services

MANHOLE REHABILITATION

PIPE LINING

POINT REPAIRS

TABLE OF CONTENTS

SECTION 1 – GENERAL

1.01 LOCATION OF THE WORK SITE AND ACCESS

1.02 SCOPE OF WORK

1.03 PROJECT SUMMARY

1.04 CONTRACT DRAWINGS AND SPECIFICATIONS

1.05 FIELD ENGINEERING

1.06 SAFEGUARDING SURVEY MARKS

1.07 INSPECTION AUTHORITY

1.08 PROJECT SCHEDULE

1.09 MATERIALS AND EQUIPMENT

1.10 MANUFACTURER

1.11 SAMPLES

1.12 EQUIVALENT QUALITY

1.13 MATERIAL AND EQUIPMENT DELIVERY AND STORAGE

1.14 SERVICE OF MANUFACTURER'S REPRESENTATIVE

1.15 CONTAMINANTS CONTAINMENT/DISPOSITION

1.16 PREVENTION, CONTROL, AND ABATEMENT OF EROSION AND WATER POLLUTION

1.17 MAINTENANCE OF STORM DRAINAGE SYSTEM

1.18 SPILL OR DISCHARGE OF WASTEWATER OR RECLAIMED WATER

1.19 SEQUENCE OF OPERATION

1.20 WORK IN STREETS AND HIGHWAYS

1.21 WORK IN PRIVATE PROPERTY

1.22 PERMITS

1.23 FIELD OFFICE AND APPURTENANT STRUCTURES

1.24 CONTRACTOR'S SIGN

1.25 MOBILIZATION

1.26 WATER PURCHASE

1.27 TRAFFIC CONTROL

1.28 TREE PROTECTION

1.29 TREE REMOVAL AND REPLACEMENT

1.30 UTILITIES

1.31 NEIGHBORHOOD NOTIFICATION

1.32 SHOP, FIELD, AND LABORATORY TESTING

1.33 SALVAGED MATERIALS

SECTION 2 – PAY ITEM DESCRIPTIONS

2.01 SCOPE

2.02 ESTIMATED QUANTITIES

2.03 WORK OUTSIDE AUTHORIZED LIMITS

2.04 MEASUREMENT STANDARDS

2.05 AREA MEASUREMENTS

2.06 LUMP SUM ITEMS

2.07 PAY ITEM DESCRIPTIONS

WASTEWATER SYSTEM MANHOLE REHABILITATION
WASTEWATER SYSTEM PIPE LINING
WASTEWATER SYSTEM POINT REPAIRS

SECTION 3 – SUBMITTALS

3.01 GENERAL

3.02 CONTRACTOR RESPONSIBILITIES

3.03 SUBMITTAL NUMBERING

3.04 SUBMITTAL REVIEW

SECTION 4 – AS BUILTS

4.01 MINIMUM AS-BUILT DRAWING STANDARDS FOR ALL AS-BUILT DRAWINGS

4.02 AS-BUILT DRAWINGS PREPARATION

4.03 AS-BUILT DRAWINGS SUBMITTAL

SECTION 5 – CONCRETE, MASONRY, AND REINFORCING STEEL

5.01 GENERAL

5.02 PORTLAND CEMENT CONCRETE

5.03 REINFORCING STEEL

5.04 FIBROUS CONCRETE REINFORCEMENT

5.05 PLACEMENT OF REINFORCEMENT

5.06 PLACEMENT OF CONCRETE

5.07 CURING OF CONCRETE

5.08 FINISHING OF CONCRETE

5.09 CONCRETE BRICK

5.10 CLAY BRICK

5.11 MASONRY BLOCK

5.12 MORTAR

5.13 GROUT

SECTION 6 – EXCAVATION AND BACKFILL

6.01 GENERAL

6.02 TRENCH SAFETY

6.03 WORK IN WETLANDS, MANGROVES, AND PRESERVATION AREAS

6.04 CLEARING AND GRUBBING

6.05 ROADWAY EXCAVATION

6.06 TRENCH EXCAVATION

6.07 STRUCTURE EXCAVATION

6.08 EXCAVATION OF UNSUITABLE MATERIAL

6.09 SHEETING, SHIELDING, AND SLOPING

6.10 DEWATERING

6.11 BORROW MATERIAL

6.12 BEDDING MATERIAL

6.13 STRUCTURAL SLAB BEDDING

6.14 BACKFILL MATERIAL

6.15 BACKFILL COMPACTION

6.16 BACKFILLING OF TRENCH

6.17 BACKFILLING STRUCTURES

6.18 BACKFILLING UNDER ROADWAYS

6.19 DISPOSING OF LEFTOVER MATERIAL

6.20 ADJACENT FACILITIES

6.21 TEMPORARY SUPPORTS

6.22 FLOWABLE FILL

SECTION 7 – SURFACE RESTORATION

7.01 GENERAL

7.02 ROADWAY RESTORATION

7.03 TEMPORARY PAVEMENT

7.04 SHELL BASE

7.05 LIMEROCK BASE

7.06 CRUSHED (RECLAIMED) CONCRETE BASE

7.07 ASPHALTIC CONCRETE PAVEMENT

7.08 BRICK PAVEMENT

7.09 CURB AND GUTTER

7.10 CONCRETE SIDEWALK

7.11 HEXAGON BLOCK SIDEWALK

7.12 DRIVEWAY AND PARKING LOT

7.13 DRIVEWAY - ASPHALT

7.14 DRIVEWAY - CONCRETE

7.15 DRIVEWAY - PEAGRAVEL

7.16 DRIVEWAY - SHELL

7.17 GRASS

7.18 EXPANSION JOINT MATERIAL

SECTION 8 – PAINTING

8.01 GENERAL

8.02 SUBMITTALS

8.03 PAINTING SCHEDULES AND SYSTEMS

8.04 EXECUTION

SECTION 9 – PIPING MATERIALS: DUCTILE IRON PIPE AND FITTINGS

9.01 GENERAL

9.02 PIPE

9.03 FITTINGS

9.04 JOINTS – BURIED PIPE AND FITTINGS

9.05 JOINTS – EXPOSED PIPE AND FITTINGS

9.06 DETECTION

9.07 ZINC/EPOXY/FLUOROPOLYMER PROTECTIVE COATING

SECTION 10 – PIPING MATERIALS: PVC PRESSURE PIPE

10.01 GENERAL

10.02 PIPE

10.03 FITTINGS

10.04 JOINTS

10.05 DETECTION

10.06 MARKINGS AND COLOR CODING

10.07 HARNESSING

10.08 INSPECTION AND TESTING

SECTION 11 – PIPING MATERIALS: HDPE PRESSURE PIPE

11.01 SCOPE OF WORK

11.02 QUALIFICATIONS

11.03 POLYETHYLENE PRESSURE PIPE

11.04 JOINTS

11.05 DETECTION

11.06 IDENTIFICATION

11.07 INSTALLING POLYETHYLENE PRESSURE PIPE AND FITTINGS

11.08 INSPECTION AND TESTING

SECTION 12 – PRESSURE PIPE CONSTRUCTION

12.01 GENERAL

12.02 DATA TO BE SUBMITTED

12.03 MATERIALS

12.04 CONNECTIONS TO EXISTING MAINS

12.05 CONSTRUCTION OPERATIONS

12.06 LAYING AND JOINTING PRESSURE PIPELINES

12.07 PIPELINE CLEANING

12.08 TESTING AND DISINFECTION OF PRESSURE PIPELINES

12.09 SURFACE RESTORATION AND MISCELLANEOUS

SECTION 13 – DIRECTIONAL BORING OF PIPE

13.01 GENERAL

13.02 TESTING

13.03 QUALIFICATIONS

13.04 SUBMITTALS

13.05 MATERIALS

13.06 SITE CONDITIONS

13.07 DAMAGE RESTORATION & REMEDIATION

13.08 QUALIFICATIONS FOR REJECTION OF DIRECTIONAL BORE

13.09 PRODUCT LOCATING AND TRACKING

13.10 PRODUCT BORE HOLE DIAMETER

13.11 EQUIPMENT REQUIREMENTS

13.12 THRUST / PULLBACK REQUIREMENTS

13.13 INSTALLATION PROCESS

13.14 PIPELINE TESTING

SECTION 14 – JACKING AND BORING

14.01 SCOPE OF WORK

14.02 OPERATIONS ON THE CITY OF ST. PETE BEACH OR STATE OF FLORIDA PROPERTY

14.03 SHOP DRAWINGS

14.04 SUBMITTALS

14.05 CASING PIPE

14.06 CARRIER PIPE

14.07 CASING SPACERS

14.08 TUNNEL LINER PLATES

14.09 CASING END SEALS

14.10 CONSTRUCTION

14.11 INSTALLING CARRIER PIPE IN CASING PIPE

14.12 TESTING

SECTION 15 – FLUSHING, TESTING, AND DISINFECTION

15.01 WORK INCLUDED

15.02 REFERENCES

15.03 SUBMITTALS

15.04 QUALITY ASSURANCE

15.05 REGULATORY REQUIREMENTS

15.06 DISINFECTION CHEMICALS

15.07 FLUSHING AND PRESSURE TESTING – PIPING

15.08 DISINFECTION FOR WATER MAIN INSTALLATION

15.09 BACTERIOLOGICAL SAMPLING FOR WATER MAIN INSTALLATION

15.10 QUALITY CONTROL

15.11 CONNECTIONS TO EXISTING MAINS

SECTION 16 – SANITARY SEWER BYPASS PUMPING

16.01 SCOPE OF WORK

16.02 PUBLIC IMPACTS

16.03 SUBMITTALS

16.04 EQUIPMENT

16.05 SITE CONDITIONS

16.06 ON-SITE MONITORING

16.07 OPERATIONS

16.08 DAMAGE RESTORATION & REMEDIATION

SECTION 17 – VALVES AND APPURTENANCES

17.01 GENERAL

17.02 TOOLS

17.03 GATE VALVES

17.04 PRESSURE SUSTAINING AND CHECK VALVE

17.05 BALL VALVES FOR PVC PIPE

17.06 BUTTERFLY VALVES

17.07 PLUG VALVES

17.08 VALVE ACTUATORS

17.09 AIR RELEASE VALVES

17.10 VALVE BOXES

17.11 CORPORATION COCKS

17.12 FLANGE ADAPTER COUPLINGS

17.13 FLEXIBLE COUPLINGS

17.14 HOSE BIBS

17.15 SLOW CLOSING AIR AND VACUUM VALVES

17.16 SURGE ANTICIPATOR VALVES

17.17 CHECK VALVES

17.18 HYDRANTS

17.19 RESTRAINING CLAMPS

17.20 TAPPING SLEEVES AND GATE VALVES

17.21 SINGLE ACTING ALTITUDE VALVES

17.22 INSTALLATION

17.23 HYDRANT INSTALLATION

17.24 SHOP PAINTING

17.25 FIELD PAINTING

17.26 INSPECTION AND TESTING

SECTION 18 – SANITARY SEWER CONSTRUCTION

18.01 GENERAL

18.02 DATA TO BE SUBMITTED

18.03 MATERIALS

18.04 CONNECTIONS TO EXISTING SANITARY SEWERS

18.05 CONSTRUCTION OPERATIONS

18.06 MANHOLE CONSTRUCTION

18.07 LAYING AND JOINTING PIPELINES

18.08 TESTING OF SEWER PIPELINES

18.09 SANITARY SEWER PIPE REPAIRS

SECTION 19 – CEMENTITIOUS REHABILITATION – NOT APPLICABLE

SECTION 20 – CCTV INSPECTION AND PIPE CLEANING

20.01 SCOPE OF SERVICES AND WORK PHASING FOR SYSTEM CCTV INSPECTION AND PIPE CLEANING

20.02 COMPLIANCE AND ACCEPTANCE

20.03 CLEANING EQUIPMENT

20.04 REFERENCES DOCUMENTS

20.05 GENERAL EXECUTION

20.06 SUBMITTALS

20.07 OWNER RIGHTS

20.08 EMERGENCY RESPONSE

20.09 SEQUENCE OF INSPECTION AND CLEANING

SECTION 21 – CURED-IN-PLACE PIPE LINER (CIPP)

21.01 GENERAL

21.02 REFERENCE DOCUMENTS

21.03 QUALIFICATION REQUIREMENTS

21.04 SUBMITTALS

21.05 MATERIALS

21.06 STRUCTURAL REQUIREMENTS

21.07 INSTALLATION

21.08 CIPP MAIN LINER TERMINATION AND CONNECTION IN MANHOLES

21.09 SERVICE RECONNECTION

21.10 INSTALLATION RESPONSIBILITIES FOR INCIDENTAL ITEMS

21.11 QUALITY ASSURANCE PROCEDURES

SECTION 22 – PRECAST POLYMER CONCRETE STRUCTURES – NOT APPLICABLE

SECTION 23 – FIBERGLASS WET WELL OR MANHOLE LINER

23.01 GENERAL

23.02 MATERIALS

23.03 WET WELL FABRICATION

23.04 FRP MANHOLE LINER DESIGN

23.05 PHYSICAL REQUIREMENTS

23.06 TEST METHODS

23.07 INSTALLATION

23.08 SHIPPING AND HANDLING

SECTION 24 – SUBMERSIBLE SEWAGE PUMPS – NOT APPLICABLE

SECTION 25 – PUMP STATION CONTROLS – NOT APPLICABLE TO

SECTION 26 – ELECTRICAL – NOT APPLICABLE

SECTION 27 – VARIABLE FREQUENCY DRIVES – NOT APPLICABLE

SECTION 28 – ODOR CONTROL SYSTEMS – NOT APPLICABLE

SECTION 29 – PRECAST CONCRETE BUILDING – NOT APPLICABLE

SECTION 30 – DIESEL DRIVEN GENERATOR WITH WEATHERPROOF ENCLOSURE – NOT APPLICABLE

SECTION 31 – MISCELLANEOUS EQUIPMENT – NOT APPLICABLE

SECTION 32 – STATE REVOLVING FUND (SRF) REQUIREMENTS – NOT APPLICABLE

SECTION 33 – FRAC-OUT PLAN FOR SUBAQUEOUS CROSSINGS

33.01 GENERAL

33.02 BEST MANAGEMENT PRACTICES (BMPs)

33.03 FRAC-OUT PLAN

33.04 RELEASE PROCEDURE

33.05 DRILLING MUD CONTAINMENT PLAN

SECTION 34 – MANHOLE INSPECTION

34.01 SCOPE OF SERVICES AND WORK PHASING

34.02 REQUIREMENTS

34.03 QUALITY ASSURANCE

34.04 SHOP DRAWINGS AND SUBMITTALS

34.05 NOTIFICATION

34.06 EXECUTION

34.07 MANDATORY INSPECTION HEADER INFORMATION

34.08 MANHOLE COMPONENT OBSERVATIONS

34.09 MANHOLE INTERIOR INSPECTION

34.10 CONNECTING PIPE DETAILS

34.11 MANHOLE SKETCH, MAP, UPDATE, AND NOTES

34.12 NOTIFICATION OF EMERGENCY CONDITIONS

34.13 COMPLETION

34.14 PHOTOGRAPH REQUIREMENTS

34.15 MANHOLE NUMBERING, FORMS, AND DEFECT CODES

34.16 SITE RESTORATION

34.17 DELIVERABLES

SECTION 35 – CHEMICAL SEALING OF HOST PIPE AND SERVICE CONNECTIONS

35.01 GENERAL

35.02 PRODUCTS

35.03 SUBMITTALS

35.04 EQUIPMENT

35.05 EXECUTION

SECTION 36 – REMOVAL OF PROTRUDING SERVICE CONNECTIONS

36.01 GENERAL

36.02 PRODUCTS

36.03 EXECUTION

SECTION 37 – WASTEWATER STRUCTURE REHABILITATION

37.01 GENERAL

37.02 GOVERNING STANDARDS

37.03 DEFINITIONS

37.04 QUALIFICATIONS

37.05 SUBMITTALS

37.06 QUALITY ASSURANCE/ QUALITY CONTROL

37.07 CONTAINMENT AND SITE CONDITIONS

37.08 WARRANTY

37.09 MATERIALS

37.10 REPAIR & PREPARATION

37.11 COATING MATERIAL APPLICATION

37.12 COATING SYSTEM SPECIFICATION SHEETS

END OF SECTION

THIS PAGE INTENTIONALLY LEFT BLANK

SECTION 1 - GENERAL

1.01 LOCATION OF THE WORK SITE AND ACCESS

Access to the work sites shall be over streets and walkways. Any damage to existing pavement surface and base or other surface improvements outside the Contract Pay Limits, attributable to the Contractor's activities, shall be restored to like-new condition by the Contractor at the Contractor's expense.

The proposed work will be located within the City of St. Pete Beach in Pinellas County, FL, throughout the entire wastewater collection and transmission system. Each asset to be rehabilitated and the type of rehabilitation required will be identified in each individual Work Order with the location shown on corresponding geographical exhibits.

1.02 SCOPE OF WORK

The Contractor shall furnish all labor, superintendence, materials, power, light, heat, fuel, water, tools, appliances, equipment, supplies, shop drawings, working drawings and other means of construction necessary or proper for performing and completing the work. The Contractor is responsible for obtaining all required permits necessary for the work, including all applications and review fees, other than those permits which may have already been obtained. The Contractor shall perform and complete the work in a speedy and efficient manner consistent with safety of life and property and to the city’s satisfaction, and in strict accordance with the Contract Documents. The Contractor shall repair or restore all structures and property damaged or disturbed during performance of the work.

The cost of incidental work described in this General Section, for which there are no specific Contract Items, shall be considered as part of the general cost of doing the work and shall be included in the prices for the various Contract Items. No additional payment will be made.

The Contractor shall be solely responsible for the means and methods of construction and the adequacy of his workmanship, materials, and equipment.

1.03 PROJECT SUMMARY

Wastewater System Manhole Rehabilitation (Manhole Project)

The Contractor shall furnish all labor, material, equipment, and services necessary for manhole rehabilitation. The work shall be completed at various locations through the City’s wastewater service area and shall include, but is not limited to, maintenance of traffic, temporary by-pass pumping and/or diversion of wastewater, cleaning, removal and disposal of all sand, rubble, deposits, and other accumulated debris, re-building manhole bench and channels, ring (frame) and cover adjustment and replacement, pavement restoration, inflow/infiltration elimination, surface preparation, cementitious and polymer coatings installation, internal chimney sealing, manhole cover insert installation, testing, project site cleanup and restoration, and all other incidentals as required and directed by the Engineer to complete the work.

Wastewater System Pipe Lining (Lining Project)

The Contractor shall furnish all labor, material, equipment, and services necessary for wastewater pipe rehabilitation using Cured-In-Place-Pipe (CIPP) lining. The work shall be completed at various locations through the City's wastewater service area and shall include, but is not limited to, maintenance of traffic, temporary by-pass pumping and/or diversion of wastewater, cleaning, removal and disposal of all sand, rubble, deposits, and other accumulated debris, CIPP liner installation, reconnection of service laterals, testing of CIPP liners, project site cleanup and restoration, and all other incidentals as required and directed by the Engineer to complete the work.

Wastewater System Point Repairs (Point Repair Project)

The Contractor shall furnish all labor, material, equipment, and services necessary for wastewater point repairs. The work shall be completed at various locations throughout the City's wastewater service area and shall include, but is not limited to, maintenance of traffic, temporary by-pass pumping and/or diversion of wastewater, dewatering, directional drilling, jack and boring, remove unsuitable materials below trench grade, sanitary sewer gravity and force main installation, force main and gravity main connections, remove out of service gravity and force mains, install manhole connections, grout out of service pipe, install valves and associated appurtenances, project site cleanup and restoration, and all other incidentals as required and directed by the Engineer to complete the work.

1.04 CONTRACT DRAWINGS AND SPECIFICATIONS

Where the Contract Drawings and Specifications are not in agreement, the Contract Drawings shall govern. The Contractor shall furnish all labor, equipment, and materials to construct the Project and all miscellaneous and appurtenant work complete in place as specifically described and included under said each Contract Pay Item as shown, specified, or directed by the Engineer in accordance with the obvious or expressed intent of the Contract.

The Technical Specifications for the Project that reference FDOT-SSRBC (Florida Department of Transportation - Standard Specifications for Road and Bridge Construction) pertain to the most recent edition at the date of issuance of these Specifications.

1.04.01 COPIES FURNISHED TO CONTRACTOR

The Contractor shall furnish each of the subcontractors, manufacturers, and material men such copies of the Contract Documents as may be required for their work. Additional copies of the Contract Drawings and Specifications, when requested, may be furnished to the Contractor at cost of reproduction.

1.04.02 SUPPLEMNTARY DRAWINGS

When, in the opinion of the City, it becomes necessary to explain more fully the work to be done or to illustrate the work further or to show any changes which may be required, drawings known as Supplementary Drawings, with specifications pertaining thereto, will be prepared by the Engineer and the City and provided to the Contractor.

1.04.03 CONTRACTOR TO CHECK CONTRACT DRAWINGS AND DATA

The Contractor shall verify all dimensions, quantities and details shown on the Contract Drawings, Supplementary Drawings, Schedules, Specifications or other data received from the City or the Engineer and shall notify the City and Engineer of all errors, omissions, conflicts, and discrepancies found therein. Failure to discover or correct errors, conflicts or discrepancies shall not relieve the Contractor of full responsibility for unsatisfactory work, faulty construction or improper operation resulting therefrom nor from rectifying such conditions at the Contractor's own expense. The Contractor shall assume all responsibility for the making of estimates of the size, kind, and quality of materials and equipment included in work to be done under the Contract with approval by the City.

1.05 FIELD ENGINEERING

The Contractor shall establish and provide all vertical and horizontal control points for this Project including benchmarks. The Contractor shall provide the field layout surveying necessary to properly construct the work as indicated on the Contract Drawings.

All field layout surveying shall be performed under the supervision of a Professional Land Surveyor (Chapter 472, Florida Statutes). The Contractor shall submit the name and registration number of Surveyor as directed by the Engineer. The Engineer reserves the right to check all survey staking and to require adjustments or re-staking by the Contractor in the event that conflicts, or errors are detected.

Water pressure pipelines that are 8-inch or less diameter shall be installed with the required cover using horizontal control stakes provided by the Contractor. Sanitary sewer and sanitary pressure pipelines greater than 8-inch diameter shall be installed using an approved method for line and grade control. Methods for line and grade control shall be submitted to the Engineer for review and acceptance, as specified for shop drawings. Sketches shall be provided by the Contractor showing vertical adjustment necessary for pressure pipelines to adequately clear storm drains and other utilities.

1.06 SAFEGUARDING SURVEY MARKS

The Contractor shall safeguard all existing property monuments, benchmarks, and other survey marks adjacent to and within the Project limits and shall bear the cost of re-establishing them if disturbed or destroyed.

1.07 INSPECTION AUTHORITY

The City or Engineer has ultimate responsibility for contract administration and inspection for this Project. The City or Engineer may assign field inspection responsibilities to a Design Professional and/or City Inspector. Each step of construction is subject to review and acceptance by the City or Engineer prior to proceeding with a subsequent step.

During the progress of the Work and up to the date of final acceptance, the Contractor shall at all times afford representatives of the City, the County, the State, the Department of Environmental

Protection, the Department of Transportation, the Department of Labor, or any other agency with jurisdiction, every reasonable, safe, and proper facility for observation of the work done or being done at the site, and also the manufacture or preparation of materials and equipment at the place of such manufacture or preparation.

The Project line of authority will be presented at the Preconstruction Conference.

1.08 PROJECT SCHEDULE

The Contractor shall submit an electronic version in PDF form within 30 days following the Preconstruction Conference of each Work Order.

Scheduling and progress reporting shall be accomplished using a bar chart to provide a clear and concise comparison of progress.

1.09 MATERIALS AND EQUIPMENT

All materials, appliances, and types of construction shall be in accordance with the Technical Specifications and shall, in no event, be less than that necessary to conform to the requirements of any applicable laws, ordinances, and codes.

All materials and equipment to be incorporated into the Work shall be new, unused, and correctly designed. They shall be of standard first grade quality, produced by expert workmen, and be intended for the use for which they are offered. Materials or equipment which, in the opinion of the Engineer, are inferior or of a lower grade than indicated, specified, or required, will not be accepted.

Projects funded by the State Revolving Fund must comply with the requirements of the American Iron and Steel Requirement unless otherwise specified in the Contract Documents and approved by the Engineer.

1.10 MANUFACTURER

The names of proposed manufacturers, manufacturers' representatives, suppliers, and dealers who are to furnish materials, equipment, or other fittings, shall be submitted by the Contractor to the Engineer for review and acceptance. Such acceptance must be obtained before Shop Drawings will be accepted for review. All transactions with the manufacturer and subcontractors shall be through the Contractor.
Any two or more pieces of material or equipment of the same kind, type, or classification and being used for identical types of service, shall be made by the same manufacturer.

Projects funded by the State Revolving Fund must comply with the requirements of the American Iron and Steel Requirement unless otherwise specified in the Contract Documents and approved by the Engineer.

1.11 SAMPLES

The Contractor shall, when required, submit to the Engineer for review and acceptance, typical samples of material and appliances. The samples shall be properly identified by tags and shall be

submitted sufficiently in advance of the time when they are to be incorporated into the Work so that rejections thereof will not cause delay. A letter of transmittal from the Contractor requesting approval shall accompany all such samples.

1.12 EQUIVALENT QUALITY

In the Contract Documents, whenever an article, material, apparatus, equipment, or process is called for by trade name or by name of a patentee, manufacturer, or dealer, or by reference to catalog of a manufacturer or dealer, it shall be understood as intending to mean and specify the article, material, apparatus, equipment, or process designated, or any equal thereto in quality, finish, design, efficiency, and durability, and equally serviceable for the purposes for which it is intended.

Whenever material or equipment is submitted for review as being equal to that specified, the submittal shall include sufficient information and data to demonstrate that the material or equipment conforms to the Contract requirements. The decision as to whether such material or equipment is equal to that specified shall be made by the Engineer.

Upon rejection of any material or equipment submitted as the equivalent of that specifically named in the Contract, the Contractor shall immediately proceed to furnish the designated material or equipment.

Neither the acceptance by the Engineer of alternate material or equipment as being equivalent to that specified, nor the furnishing of the material or equipment specified, shall in any way relieve the Contractor of responsibility for failure of the material or equipment, due to faulty design, material, or workmanship, to perform the functions required of them by the Contract Documents.

1.13 MATERIAL AND EQUIPMENT DELIVERY AND STORAGE

The Contractor shall deliver materials in ample quantities to ensure the most speedy and uninterrupted progress of the work to complete the work within the allotted time. The Contractor shall also coordinate deliveries to avoid delay in, or impediment of, the progress of the work of any related contractor. The Contractor shall provide space for storage of materials and equipment.

Pipe strung along roads and rights-of-way shall be placed in a manner that will not endanger or restrict pedestrian or vehicular traffic. Pipe strings shall not be allowed outside right-of-way limits.

1.14 SERVICE OF MANUFACTURER'S REPRESENTATIVE

The Contract amount shall include but is not limited to the cost of furnishing a competent and experienced representative of the equipment manufacturer who shall assist the Contractor, when required, to install, adjust, test, and place in operation the equipment in conformity with the Contract Documents. After the equipment is placed in operation, the representative shall make all adjustments and tests required by the Engineer to prove that the installed equipment is in proper and satisfactory operating condition. The representative shall instruct personnel as may be designated by the Engineer in the proper operation and maintenance of such equipment.

1.15 CONTAMINANTS CONTAINMENT/DISPOSITION

Prior to the installation of well points for dewatering, the Contractor shall visually inspect the work area for indications of existing ground water monitoring, wells, or metal caps at grade. The Contractor shall review the work area for monitoring wells or abandoned fuel tanks and shall notify the Engineer in writing if any of the above items exist.

During dewatering activities, contractor to test water for contaminants before discharge. If the water is odorous, contaminated, or discolored (excluding tannic acid or iron), the Contractor shall stop the dewatering activities and shall notify the Engineer in writing of such, and request direction.

When work activities encounter or expose any abnormal condition that may indicate the existence of a hazardous or toxic waste, work activities shall stop in the vicinity of the abnormal condition and the Contractor shall notify the Engineer immediately. The presence of tanks or barrels; discolored earth, metal, wood, or groundwater; visible fumes; abnormal odors; excessively hot earth; smoke; or other conditions that appear abnormal, may be signs of hazardous or toxic wastes and shall be treated with extraordinary caution.

Every effort shall be made by the Contractor to minimize the spread of any hazardous or toxic waste into uncontaminated areas.

The Contractor's operations shall not resume until directed in writing by the Engineer.

Disposition of the hazardous or toxic waste will be made in accordance with the requirements and regulations of any City, County, State, or Federal agency having jurisdiction.

1.16 PREVENTION, CONTROL, AND ABATEMENT OF EROSION AND WATER POLLUTION

The Contractor shall be responsible for prevention, control, and abatement of erosion, siltation, and water pollution resulting from construction of the Project until final acceptance of the Project.

The Contractor shall implement all appropriate turbidity management practices at the point of discharge into a storm sewer, gutter, or other conveyance to ensure that state water quality standards are not violated at the point where the storm drain, gutter, or other conveyance discharges into a surface water.

All necessary provisions shall be taken to ensure compliance with the water quality standards of the State of Florida. Attention is called to Chapter 62-302, Florida Administrative Code, and in particular, the requirements that turbidity shall not exceed 29 NTUs above background level. Adequate silt containment procedures and equipment shall be used to control turbidity, at no additional cost to the City.

1.17 MAINTENANCE OF STORM DRAINAGE SYSTEM

The Contractor shall be responsible at all times to maintain the operation of existing stormwater facilities, or, when existing stormwater facilities are removed, to provide equivalent capacity alternate forms of stormwater removal adequate to prevent upstream flooding in excess of existing conditions. This responsibility shall include but is not limited to the installation of temporary

connections, bypass pumping, or other temporary means necessary until the new drainage system is fully operational.

1.18 SPILL OR DISCHARGE OF WASTEWATER OR RECLAIMED WATER

The discharge of wastewater or effluent (reclaimed water) into waters of the State and/or into canals, ditches, and ponds that are connected to waters of the State is prohibited. Any spill or discharge of wastewater or reclaimed water shall be immediately reported to the Engineer, the City's Project Manager, and the City's Emergency Dispatch Center. Contact information will be provided for all necessary City personnel and the Engineer at the Preconstruction Conference. In the event of a spill or discharge, the Contractor shall immediately control, contain, and stop the spill or discharge and shall repair any damage to the City's facilities.

The Contractor shall be responsible for any penalties and costs charged to the City by the FDEP and for all costs incurred by the City as a result of the Contractor's actions or as a result of the Contractor's negligence. The fines, and anticipated costs, which may be incurred by the City as a result of the Contractor's actions or negligence, shall be paid to the City within 30 days, or the costs incurred will be deducted from the total Contract amount.

1.19 SEQUENCE OF OPERATION

1.19.01 PIPELINE WORK

It is the intent of the City that all pipeline work associated with the Project be installed to completion in a timely and orderly manner to minimize inconvenience to the Public. Pipe and pipe materials shall not be stored or strung in residential areas more than 3 weeks in advance of pipe installation unless otherwise approved by the Engineer.

The Contractor shall include in the Project Schedule a Sequence of Operations including, but not limited to, the following components:

A. Pipe and pipe material storage
B. Bypass Pumping
C. Backfilling
D. Testing and repairs
E. Disinfection
F. Surface Restoration and Cleanup

1.19.02 PUMP/LIFT STATION WORK

It is essential that any Project work conducted at Pump/Lift Station sites be sequenced to minimize obstruction of normal daily operations of the Pump/Lift Station.

The Contractor shall include in the Project Schedule a Sequence of Operations including, but not limited to, the following components:

A. Equipment and material storage
B. Bypass Pumping

C. Testing and repairs
D. Surface Restoration and Cleanup

1.19.03 MISCELLANEOUS

Utility Companies may be present on the work site adjusting their facilities and installing new facilities. The Contractor's work shall be scheduled in such a manner as to minimize conflicts with various utility companies.

The Contractor shall clean up the site for each phase of work in accordance with the Contract Documents and confine work and personnel to designated areas in accordance with the Specifications. Before proceeding to a subsequent phase of work, unless otherwise approved by the Engineer.

1.19.04 NO TIME EXTENSION

If the Engineer orders construction, or a phase of construction, to be stopped due to the Contractor's neglect to adhere to the Sequence of Operations as outlined herein, the Stop Work Order shall not constitute a basis for extension of time.

1.20 WORK IN STREETS AND HIGHWAYS

All work within streets and highways shall be subject to the regulations and requirements of the City of St. Pete Beach, FDOT, and all other agencies with jurisdiction of the streets and highways in the work limits.

Methods and materials of construction used in restoration within such streets and highways shall conform to the requirements, inspection, and acceptance of the duly authorized representatives of the appropriate agency having jurisdiction. Restoration Work shall include but not be limited to: removal and replacement of pavement, sidewalk, curb, and gutter; replacement of storm sewer facilities; excavation and backfilling; and storage of materials and equipment.

1.21 WORK IN PRIVATE PROPERTY

The Contractor shall not trespass upon or in any way disturb private property without first obtaining written permission from the City to do so. In the event that, in the opinion of the Contractor, obtaining a temporary construction easement outside the limits of the right-of-way, of City-owned property, or of the easement(s) obtained by the City is necessary or desirable, it shall be the sole responsibility of the Contractor to obtain such easement from the owner of the property. If such easement is obtained by the Contractor, it shall contain provision to hold the City harmless from any operations of the Contractor within the easement limits. The Contractor shall not conduct construction operations on private property outside the limits of the right-of-way, of City-owned property, or of the easement(s) obtained by the City unless a copy of the Temporary Construction Easement Agreement is filed with the Engineer. It shall be the Contractor's responsibility to work equipment around poles, trees, or other obstructions and to do so at his own expense. The Contractor shall ensure all employees have a badge or visible identification during any time that they on the project site or within private property. This identification must be worn so that it is readily recognized and readable to the public.

Upon completion of work in easements, the Contractor shall, at no additional expense, restore the property, including all fences or other structures disturbed by his operations, to the full satisfaction of the City and shall obtain from the City a written release stating that restoration has been satisfactorily made. A copy of the completed written release shall be furnished to the City prior to payment. All items within the street right-of-way or sewer easement shall be removed, or removed and replaced, or restored as directed by the City.

1.22 PERMITS

Construction projects performed for the City will require licenses and permits in the same manner as private construction projects within the City.

The Contractor shall secure, at his expense, all licenses and permits, and shall comply with all applicable laws, regulations, and codes as required by the State of Florida and/or the City of St. Pete Beach whether performed by the Contractor or by others. The Contractor must be registered to complete such work within Pinellas County.

1.23 FIELD OFFICE AND APPURTENANT STRUCTURES

No field office or appurtenant structures by the Contractor, any subcontractor, or any material supplier, will be allowed on the Project site.

Space on City property or rights-of-way proposed to be used for storage and a field office for the Contractor shall be approved by the Engineer prior to installation providing such uses will not interfere in any manner with the construction of the work or the operation of existing facilities.

1.24 CONTRACTOR'S SIGN

No sign by the Contractor, any subcontractor, or any material supplier, will be allowed on the Project site.

1.25 MOBILIZATION

Mobilization shall include but is not limited to all preparatory work and operations necessary to begin the Project, including moving of personnel, equipment, traffic control, and all else necessary to commence work. The cost of bonds, insurance, shop drawings, and preconstruction expenses shall also be included.

If a separate Pay Item is included for mobilization, payment will be as specified for that Pay Item. If no Pay Item is included, costs for mobilization shall be included with the costs for the major Work items included in the Proposal.

1.26 WATER PURCHASE

Water used in connection with this Project must be coordinated with Pinellas County. Reclaimed water used in connection with this Project must be coordinated with the City.

1.27 TRAFFIC CONTROL

The Contractor shall provide required traffic controls under City observation. The Contractor shall notify the City's Project Manager a minimum of 2 working days prior to any construction affecting traffic flow. A Maintenance of Traffic plan drawing shall be submitted for review by the Engineer prior to each lane closure or opening during construction. All traffic control devices utilized during construction shall be provided by the Contractor and meet the requirements set forth in the latest revision of U.S. Department of Transportation Federal Highway Administration's "Manual on Uniform Traffic Control Devices for Streets and Highways" and the Florida State Department of Transportation's "Standard Plans for Road and Bridge Construction." Failure or refusal, on the part of the Contractor, to install, maintain and/or position traffic control devices promptly, fully, and in an acceptable manner, shall be sufficient cause for the City, after 24-hour notice, to perform the traffic control with its own organization, or to contract with any other individual, firm, or corporation to perform the required traffic control. All costs and expenses incurred thereby shall be charged against the defaulting Contractor, and the amount thereof deducted from any money due, or which may become due him, or shall be charged against the Contract Bond. Any Work performed as described by this paragraph, shall not relieve the Contractor in any way of his responsibility for the Work performed by him.

Traffic shall be performed so that vehicular traffic shall be maintained on with at least one 10-foot wide lane in each direction at all times. An acceptable detour route shall be developed by the Contractor to redirect traffic when and where necessary, with the approval of the Transportation Special Events Division. Temporary lanes shall be constructed with a minimum 1-inch thick asphaltic concrete surface over a 6-inch thick limerock base compacted to 98% of the maximum density in accordance with AASHTO T-180.

Failure of the Contractor to comply with any of the above traffic control requirements may result in issuance of a stop work order until the violation is corrected.

All maintenance of traffic in the FDOT right-of-way shall be in accordance with FDOT requirements.

1.28 TREE PROTECTION

Particular care shall be taken by the Contractor to protect trees during construction by erecting approved barricades to prevent unnecessary damage to trunk and roots during construction. Such barriers shall protect the area within the dripline.

The Contractor shall prune all branches that interfere with construction in accordance with American Forestry Association Standards. Roots over 2-inch diameter shall be preserved wherever possible. If root pruning is required, roots shall be cut cleanly.

Temporary soil deposits, concrete block, concrete wash, or solvents shall not be placed within the dripline. The grade within the dripline shall be preserved. If adjacent grade is altered, protective measures such as those described in the Florida State Division of Forestry "Tree Protection Manual for Builders and Developers" shall be constructed to protect the tree(s) from deleterious effects of the grade change.

1.29 TREE REMOVAL AND REPLACEMENT

The Contractor shall obtain any necessary tree removal permit, shall furnish and replace trees as required, and shall perform this Work in a manner conforming to all applicable provisions of said regulations or permit.

The cost of tree removal and obtaining the tree removal permits shall be included in the cost of the appropriate associated Contract Pay Item under which the Work is to be performed. The Contractor shall remove trees as required and approved by the Engineer whether or not said trees are shown on the Contract Drawings. Trees that must be removed, except for Australian pine, Brazilian pepper, punk, and other exempt species, shall be replaced as directed. Replacement trees shall be of native species at least 8-feet tall and at least 3-inch caliper diameter.

1.30 UTILITIES

Prior to construction, the Contractor shall familiarize himself with the location of all existing utilities and facilities within the Project Site. The Contractor must take the necessary precautions for the protection of any utility encountered on the Project or the restoration of any utility damaged during the work.

If excavation is required, The Contractor shall notify, at least 48 hours before breaking ground, all public or private service corporations having wire, poles, pipes, conduit, manholes, or other structures that may be affected by this operation, including all structures which are affected and not shown on these plans. Utility companies shall be contacted by calling the utility notification center "Sunshine 811" at 1-800-432-4770. Owners which are not members of the state's One Call service must be called directly. The City will furnish to the Contractor the available records of City utilities. The Contractor shall locate and mark all City utilities for his reference and for use by utility companies. The Contractor shall act as the City's agent for locating and marking City underground utilities within the Project limits, in accordance with the Florida Underground Facilities Damage Prevention and Safety Act (FS 556).

In all cases where existing utility lines may be interfered with by the work, the Contractor shall give a minimum of 48 hours' notice (excluding Saturdays, Sundays, and legal holidays) to the owners of such utilities to permit them to relocate the lines prior to construction. Existing utilities have been shown on the Contract Drawings insofar as information is reasonably available. However, it will be the Contractor's responsibility to preserve all existing utilities whether shown on the Contract Drawings or not. All maintenance, repair, and replacement of existing utilities shall be in accordance with the rules and regulations of the various utility companies having jurisdiction. All existing storm sewers, driveway drains, surface drainpipes and other property, removed or damaged during construction shall be repaired and reconnected by the Contractor as directed by the City at no additional cost to the City.

1.31 NEIGHBORHOOD NOTIFICATION

Not less than 7 days prior to the commencement of Work in the right-of-way, the Contractor shall notify all residents and businesses along the construction route with a printed door hanger notice indicating the scheduled date of construction, the type of construction, and the Contractor's and Superintendent's contact information. The door hanger text and a list of residents and businesses to

which the notification has been delivered shall be compiled and submitted to the Engineer prior to the Contractor commencing Work.

1.32 SHOP, FIELD, AND LABORATORY TESTING

The Engineer may require testing by certified personnel of certain materials to be incorporated in the Work, such as: soils density, pavement, concrete pipe and appurtenances, and welds.

In the event any such testing is required by the Engineer, a detailed description will be found in these Technical Specifications concerned with the specific item of Work.

Where reference is made for design mixes, tests of materials, or work performed, or where in the opinion of the Engineer, tests are required to ascertain compliance with the Specifications, the Contractor shall have such tests made by an approved testing laboratory. No additional payment will be made for these tests.

1.33 SALVAGED MATERIALS

The Contractor shall not proceed with demolition of existing materials or equipment without review and acceptance from the Engineer for the method of disposal.

All materials which are not returned to the City yard shall be disposed in an approved disposal site. The Engineer may request confirmation of the site's approval for disposal of the specific materials.

Salvaged materials shall be loaded on Contractor trucks and returned to the Public Services yard at 7581 Boca Ciega Drive, St. Pete Beach, Florida. The City will designate the specific location at the yard for placement of salvaged materials by the Contractor.

The following materials shall be removed and returned by the Contractor: pumps and pump rails, and all other materials as directed by the Engineer.

END OF SECTION

SECTION 2 - PAY ITEM DESCRIPTIONS

2.01 SCOPE

The scope of this section of the Contract Documents is to further define the items included in each Pay Item in the Bid Form section of the Contract Documents. Payment will be made based on the specified items included in the description in this section for each Pay Item.

All contract prices included in the Bid Form section will be full compensation for all shop drawings, working drawings, labor, materials, tools, equipment and incidentals necessary to complete the construction as shown on the Contract Drawings and/or as specified in the Contract Documents to be performed under this Contract. Actual quantities of each item bid on a unit price basis will be determined upon completion of the construction in the manner set up for each item in this section of the Specifications. Payment for all items listed in the Bid Form will constitute full compensation for all work shown and/or specified to be performed under this Contract.

2.02 ESTIMATED QUANTITIES

The quantities shown are approximate and are given only as a basis of calculation upon which the award of the Contract is to be made. The City does not assume any responsibility for the final quantities, nor shall the Contractor claim misunderstanding because of such estimate of quantities. Final payment will be made only for satisfactorily completed quantity of each item.

2.03 WORK OUTSIDE AUTHORIZED LIMITS

No payment will be made for work constructed outside the authorized limits of work.

2.04 MEASUREMENT STANDARDS

Unless otherwise specified for the particular items involved, all measurements of distance shall be taken horizontally or vertically.

2.05 AREA MEASUREMENTS

In the measurement of items to be paid for on the basis of area of finished work, the lengths and/or widths to be used in the calculations shall be the final dimensions measured along the surface of the completed work within the neat lines shown or designated.

2.06 LUMP SUM ITEMS

Where payment for items is shown to be paid for on a lump sum basis, no separate payment will be made for any item of work required to complete the lump sum items. Lump sum contracts shall be complete, tested and fully operable prior to request for final payment. Contractor may be required to provide a break-down of the lump sum totals.

2.07 PAY ITEM DESCRIPTIONS

Separate payment will be made for the items of work described herein and listed on the Bid Form. Any related work not specifically listed but required for satisfactory completion of the work shall be considered to be included in the scope of the appropriate listed work items.

No separate payment will be made for the incidental items not included in the Pay Item descriptions. The cost to complete such work shall be included in the applicable Pay Item unit cost. Final payments shall not be requested by the Contractor or made by the City until as-built (record) drawings have been submitted and approved by the City. Incidental items include, but are not limited to:

1. Shop Drawings, Working Drawings.
2. Clearing, grubbing and grading except as hereinafter specified.
3. Trench excavation, including necessary pavement removal and rock removal, except as otherwise specified.
4. Dewatering and disposal of surplus water.
5. Structural fill, backfill, and grading.
6. Replacement of unpaved roadways, and shrubbery plots.
7. Foundation and borrow materials, except as hereinafter specified.
8. Testing and placing system in operation.
9. Any material and equipment required to be installed and utilized for the tests.
10. Pipe, structures, pavement replacement, driveways and/or appurtenances included within the limits of lump sum work, unless otherwise shown.
11. Maintaining the existing quality of service during construction.
12. Appurtenant work as required for a complete and operable system.
13. Seeding and hydro mulching.
14. As-built Record Drawings, clean up, and miscellaneous work.

WASTEWATER SYSTEM MANHOLE REHABILITATION

PAY ITEM NO. 1 – MOBILIZATION

The work specified in this item consists of the preparatory work and operations in mobilizing for beginning work on the project This item includes, but is not limited to, those operations necessary for the movement of personnel, equipment, supplies and incidentals to and from the project site as a single occurrence per work site, and for the establishment of Subcontractor's temporary offices, buildings, safety equipment, first aid supplies, sanitary and other facilities, as required by these Specifications, special provisions, and State and local laws and regulations. The costs of bonds, permits and any required insurance, and any other preconstruction expense necessary for the start of the work, excluding the cost of construction materials, shall also be included in this item. Labor and equipment travel time from/to the site is included in this pay item.

The Contractor will be required to respond to the request of the Engineer or designated representative within ten (10) calendar days of notification. The Scope of Work will be developed by Project manager and will be executed in accordance with the terms and conditions of this contract.

The quantity of mobilization to be paid for under this item shall be measured as one unit each (EA) per job assignment. One (1) mobilization will be allowed for each job assignment, project, or work order no matter how many times the equipment must be relocated by loading, transporting, and unloading, or under its own power to complete the job assignment or project. Payment for mobilization shall not exceed 10 percent (10%) of the total Contract cost unless the Contractor can prove to the City that his actual mobilization cost exceeds 10 percent (10%).

PAY ITEMS NO. 2 – 14 – MAINTENANCE OF TRAFFIC

This work consists of maintaining traffic within the limits of the project for the duration of the construction period, including any temporary suspensions of the work. All Maintenance of Traffic (MOT) shall comply with FDOT Standard Plans Index 102 Series for Maintenance of Traffic. These pay items shall include labor and equipment to furnishing, installing and maintaining of traffic control and safety devices during construction; the construction and maintenance of any necessary detour facilities; providing necessary facilities for access to residences, businesses, pedestrian, schools, etc., control of dust and any other special requirements for safe and expeditious movement of traffic as may be called for on the plans. MOT shall include all of such facilities, devices and operations as are required for the safety and convenience of the public, as well as for minimizing public nuisance. The Contractor, however, shall not obstruct nor create a hazard to any traffic during the performance of the work and shall be responsible for repair of any damage to existing pavement or facilities caused by his operations. Traffic Control Devices include all types of barricades, arrow boards, signs, temporary pavement markers, lights, concrete barriers and permanent striping. All travel, equipment, labor overhead or any other associated expenses in transportation and setting out the MOT will be included in the price. All MOT line items for Multi-Lane work shall include all costs for items associated with the appropriate FDOT

Index (no separate payment for signs, barricades, etc. included with index will be allowed).

Maintenance of Traffic (MOT) shall be measured as units of work, each/day (EA/DY), hourly (HR) or by linear foot (LF) accordingly completed and priced on an individual project basis. The lump sum price for each assignment will be based on the specific MOT requirements for the assignment. The Contractor shall provide the Engineer with a proposal for the MOT that includes a breakdown of the costs, which are included in the lump sum price, and receive written acceptance from the Engineer prior to the installation of the MOT.

PAY ITEM	DESCRIPTION	UNITS
2	Flagmen (Per-Flagmen)	HR
3	Multi Lane, Lane Closures (FDOT Index No. 613)	EA/DY
4	Multi Lane, Intersection (FDOT Index No. 615)	EA/DY
5	Arrow Boards - 5' Minimum Horizontal Size	EA/DY
6	Variable Message Board	EA/DY
7	Concrete Barrier (FDOT Index No. 100)	EA/DY
8	Low Profile Barrier (FDOT Index No. 120)	EA/DY
9	Signs in Work Zones	EA/DY
10	6" Solid line Thermo Plastic - Permanent	LF
11	24" Stop Bar, Solid, Thermo Plastic, Perm.	LF
12	6" Skip line (6'-10' Skip) Thermo Plastic-Perm.	LF
13	Barricades Type III, with Warning Lights	EA/DY
14	Barricades Type I or II, with Warning Lights	EA/DY

PAY ITEM NO. 15 – REPAIR MANHOLE BENCH AND CHANNEL

Payment will be made per each manhole regardless of manhole diameter or depth. Payment shall include all materials, labor, equipment, and supplies necessary for the Repair of Manhole Bench and Channel, and specifically includes, but is not limited to, placement of temporary plugs, removal and disposal of all sand, rubble, deposits, and other accumulated debris, removal of deficient, deteriorated or unsound bench and channel materials, minor infiltration elimination in walls and base beneath the bench and channel, repair or replacement of bench and channels, cleaning, disposal of debris, restoration, and all other appurtenant work.

Separate Pay Items are provided for Traffic Control, Pump-Around Pumping Operation, and "Severe" Manhole Infiltration Elimination used in conjunction with this Work.

PAY ITEMS NO. 16 & 17 – REPAIR CHIMNEY, ADJUST/REPLACE MH CASTING

Payment will be made per each manhole regardless of manhole casting diameter or depth. Payment shall include all materials, labor, equipment, and supplies necessary for repair of chimney, and adjustment or replacement of manhole casting, and specifically includes, but is not limited to, locating and uncovering manhole, excavation, saw cutting, removal and disposal of existing asphalt pavement as needed, removal of existing manhole frame and cover casting, removal of deficient, deteriorated or unsound chimney materials, minor infiltration elimination, repair or replacement of chimney, reinstalling the existing manhole casting, delivering and

installing a new manhole casting of the same nominal size as the existing casting, backfill, restoration of surface to match existing conditions, cleaning, disposal of debris, and all other appurtenant work. Compensation for the Contractor to furnish new manhole castings will be made under separate Pay Items. The City may elect to furnish new manhole castings for the Contractor to install. The cost of City furnished manhole castings will be deducted from the Contract Price.

PAY ITEM	DESCRIPTION	UNITS
16	Repair Chimney, Asjust/Replace MH Casting - Unpaved	EA
17	Repair Chimney, Asjust/Replace MH Casting - Asphalt Pavement	EA

PAY ITEM NO. 18 – REBUILD CORBEL/CHIMNEY FOR TYPE B MANHOLE CASTING

Payment will be made per each manhole regardless of manhole casting diameter or depth. Payment shall include all materials, labor, equipment, and supplies necessary to rebuild and enlarge corbel/chimney for Type B manhole casting, and specifically includes, but is not limited to, additional pavement removal and excavation, removal of chimney/corbel materials and rebuilding chimney to match larger Type B manhole casting diameter, additional backfill, additional surface restoration, disposal of additional debris, and all other appurtenant work. This Pay Item is applicable only in conjunction with, and in addition to, the Work as listed under Pay Items 16 and 17.

PAY ITEMS NO. 19 & 20 – FURNISH MANHOLE CASTING

Payment will be made per each manhole casting for the applicable casting types listed in the Proposal. Payment shall include all materials, labor, equipment, and supplies necessary to furnish Type B manhole castings (nominal 34-inch diameter) or Type E manhole castings (nominal 23-inch diameter), and specifically includes, but is not limited to, purchasing and delivering the manhole casting materials to designated Work locations for use to replace existing manhole castings.

PAY ITEM	DESCRIPTION	UNITS
19	Furnish Manhole Casting – Type B	EA
20	Furnish Manhole Casting – Type E	EA

PAY ITEM NO. 21 – SEVERE MANHOLE INFILTRATION ELIMINATION

Payment will be made per each manhole regardless of the manhole diameter, depth, or the number of infiltration points sealed in each manhole. Payment shall include all materials, labor, equipment, and supplies necessary, and specifically includes, but is not limited to, surface preparation, drilling of grout holes into or through the manhole wall and floor, grout pipe penetrations, grout injection, removal of grout pipe and sealing grout holes, testing, restoration, and all other appurtenant work as specified.

PAY ITEM NO. 22 – CHEMICAL SEALING - GROUT

Payment will be made per gallon. This Pay item is applicable only in conjunction with Pay Item No. 21. Payment shall include all materials, equipment and labor for chemically sealing excessive infiltration defects for "Severe" Manhole Infiltration Elimination prior to manhole repairs.

PAY ITEMS NO. 23 & 24 – INTERNAL CHIMNEY SEALANT

Payment will be made per each manhole for the applicable manhole casting types listed in the Bid Form. Payment shall include all materials, labor, equipment, and supplies necessary for the installation of the internal chimney sealant for Type B manhole castings (nominal 34-inch diameter) or Type E manhole castings (nominal 23-inch diameter), and specifically includes, but is not limited to, cleaning, surface preparation, "Minor" infiltration elimination, applying the chimney sealant, testing, restoration, and all other appurtenant work.

PAY ITEM	DESCRIPTION	UNITS
23	Internal Chimney Sealant – Type B Manhole Casting	EA
24	Internal Chimney Sealant – Type E Manhole Casting	EA

PAY ITEM NO. 25 – ADDITIONAL ACCESS COST FOR MANHOLE COATING

Payment will be made per each Work location. A Work location shall be limited to the additional access costs for manhole coating Work to be performed on single or multiple proximate access structures or manholes regardless of the number of manholes coated. Measurement will be for a manhole coating installation where the manhole(s) is not readily accessible by standard equipment, e.g., when located in rear easements. Payment shall include all additional labor, equipment, materials and supplies to complete the manhole coating installation in locations with limited access.

PAY ITEMS NO. 26 – 33 – BYPASS PUMPING SETUP & OPERATION

This item provides for set up and operation of by-pass sewage pumping equipment and temporary piping as required and as described in the Standard Technical Specifications. This Pay Item is applicable on projects or repairs that have high flow or require an over night by pass operation.

The quantity to be measured for payment under this Pay Item will be the actual number of by-pass pumping set ups and operations, per part of day, required by the Engineer in the work. The minimum measurement for this pay item is eight (8) hours or 0.333 days and is measured from the time that the sewage is actually by-passed. This eight (8) hour minimum (0.333 days) includes full compensation for set up and operation for up to the first eight (8) hour period. Additional time will be in tenths of the day or twenty-four (24) hour period. The quantities determined shall be paid per day (DAY) or portion of day of by-pass pumping set up and operation.

PAY ITEM	DESCRIPTION	UNITS
26	Bypass Pumping, Set up, 6" - 10" diameter	EA
27	Bypass Pumping, Set up, 12" - 14" diameter	EA

28	Bypass Pumping, Set up, 15" - 21" diameter	EA
29	Bypass Pumping, Set up, 24" diameter	EA
30	Bypass Pumping, Operation, 6" - 10" diameter	DAY
31	Bypass Pumping, Operation, 12" - 14" diameter	DAY
32	Bypass Pumping, Operation, 15" - 21" diameter	DAY
33	Bypass Pumping, Operation, 24" diameter	DAY

PAY ITEMS NO. 34-36 – PURE CALCIUM ALUMINATE CEMENTITIOUS MH COATING, INITIAL

Payment will be made per each manhole for the applicable manhole diameters listed below, regardless of the overall manhole depth. Measurement will be from the bottom of the manhole to at least 3 vertical feet above the lowest pipe invert, or to the bottom of the cover frame if less than 3 vertical feet, and will be the average of minimum/maximum manhole diameter measured 12-inches above outgoing pipe rounded to the nearest foot. Payment shall include all materials, labor, equipment, and supplies necessary for installation, and specifically includes, but is not limited to, temporary plugs, cleaning, removal and disposal of all sand, rubble, deposits, and other accumulated debris, removal of steps, surface preparation, "Minor" infiltration elimination, sealing of all manhole wall penetrations, coating the lower 3 vertical feet of the manhole (includes invert, channel, bench, piping, CIPP liner interface, wall, and cone/corbel/chimney as applicable), testing, restoration, and all other appurtenant work as specified.

Separate Pay Items are provided for Maintenance of Traffic, Bypass Pumping Operation, and "Severe" Manhole Infiltration Elimination used in conjunction with this Work.

PAY ITEM	DESCRIPTION	UNITS
34	Pure Calcium Aluminate Cementitious MH Coating – 48” Diameter, Initial	EA
35	Pure Calcium Aluminate Cementitious MH Coating – 60” Diameter, Initial	EA
36	Pure Calcium Aluminate Cementitious MH Coating – 72” Diameter, Initial	EA

PAY ITEMS NO. 37-39 – PURE CALCIUM ALUMINATE CEMENTITIOUS MH COATING, ADDITIONAL

Payment will be made per vertical foot for the applicable manhole diameters listed below, regardless of the overall manhole depth. Measurement will be from the lowest pipe invert to the bottom of the cover frame minus the 3 vertical feet paid for under Pay Items 34 through 36. This Pay Item is applicable only in conjunction with, and includes the same Work as listed in Pay Items 34 through 36.

PAY ITEM	DESCRIPTION	UNITS
37	Pure Calcium Aluminate Cementitious MH Coating – 48” Diameter, Additional	VF
38	Pure Calcium Aluminate Cementitious MH Coating –	VF

	60” Diameter, Additional	
39	Pure Calcium Aluminate Cementitious MH Coating – 72” Diameter, Additional	VF

PAY ITEMS NO. 40-42 – REINFORCED POLYMER MH COATING, INITIAL

Payment will be made per each manhole for the applicable manhole diameters listed below, regardless of the overall manhole depth. Measurement will be from the bottom of the manhole to at least 3 vertical feet above the lowest pipe invert, or to the bottom of the cover frame if less than 3 vertical feet, and will be the average of minimum/maximum manhole diameter measured 12-inches above outgoing pipe rounded to the nearest foot. Payment shall include all materials, labor, equipment, and supplies necessary for installation, and specifically includes, but is not limited to, temporary plugs, cleaning, removal and disposal of all sand, rubble, deposits, and other accumulated debris, removal of steps, surface preparation, "Minor" infiltration elimination, sealing of all manhole wall penetrations, coating the lower 3 vertical feet of the manhole (includes invert, channel, bench, piping, CIPP liner interface, wall, and cone/corbel/chimney as applicable), testing, restoration, and all other appurtenant work as specified.

Separate Pay Items are provided for Maintenance of Traffic, Bypass Pumping Operation, and "Severe" Manhole Infiltration Elimination used in conjunction with this Work.

PAY ITEM	DESCRIPTION	UNITS
40	Reinforced Polymer MH Coating – 48” Diameter, Initial	EA
41	Reinforced Polymer MH Coating – 60” Diameter, Initial	EA
42	Reinforced Polymer MH Coating – 72” Diameter, Initial	EA

PAY ITEMS NO. 43-45 – REINFORCED POLYMER MH COATING, ADDITIONAL

Payment will be made per vertical foot for the applicable manhole diameters listed below, regardless of the overall manhole depth. Measurement will be from the lowest pipe invert to the bottom of the cover frame minus the 3 vertical feet paid for under Pay Items 40 through 42. This Pay Item is applicable only in conjunction with, and includes the same Work as listed in Pay Items 40 through 42.

PAY ITEM	DESCRIPTION	UNITS
43	Polymer MH Coating – 48” Diameter, Additional	VF
44	Polymer MH Coating – 60” Diameter, Additional	VF
45	Polymer MH Coating – 72” Diameter, Additional	VF

PAY ITEMS NO. 46-48 – CONCRETE CURB REPLACEMENT

Payment for all work included in this Pay Item will be made at the applicable Contract unit price bid per linear foot for removal of existing curbing and for furnishing and placing curb and gutter as shown on the Contract Drawings and listed on the Bid Form. Measurement will be per actual number of linear feet of curbing installed. Payment shall represent full compensation for removal of existing curb and all labor, material and equipment for compacting subgrade, forming,

furnishing, placing the concrete, and finishing as specified and all incidentals necessary for completion of this Pay Item.

PAY ITEM	DESCRIPTION	UNITS
46	Concrete Curb Replacement – Type D	LF
47	Concrete Curb Replacement – Type F	LF
48	Concrete Curb Replacement – Miami Curb	LF

PAY ITEMS NO. 49 & 50 – CONCRETE SIDEWALK REPLACEMENT

Payment will be made per square yard for the applicable sidewalk thickness listed below, regardless of the overall length. Measurement will be for complete sections. Payment shall include all materials, labor, equipment, and supplies necessary for concrete sidewalk replacement, and specifically includes, but is not limited to, excavation, saw cutting and removal of existing sidewalk, installation of replacement sidewalk to match cross section and slope of adjacent sidewalk, expansion joint material, contraction joints, backfill, restoration, cleaning, disposal of debris, and all other appurtenant work as specified.

PAY ITEM	DESCRIPTION	UNITS
49	Concrete Sidewalk Replacement – 4” Thick	SY
50	Concrete Sidewalk Replacement – 6” Thick	SY

PAY ITEMS NO. 51 & 52 – CONCRETE DRIVEWAY REPLACEMENT

Payment will be made per square yard for the applicable driveway thickness listed below, regardless of the overall length. Measurement will be for complete section. Payment shall include all materials, labor, equipment, and supplies necessary for concrete driveway replacement, and specifically includes, but is not limited to, excavation, saw cutting and removal of existing driveway, installation of replacement driveway to match cross section and slope of existing driveway, expansion joint material, contraction joints, backfill, restoration, cleaning, disposal of debris, and all other appurtenant work as specified.

PAY ITEM	DESCRIPTION	UNITS
51	Concrete Driveway Replacement – 4” Thick	SY
52	Concrete Driveway Replacement – 6” Thick	SY

PAY ITEM NO. 53 – INFLOW DISH

Payment for all work included under this Pay Item will be made at the Contract unit price bid for furnishing and installing each inflow dish as shown on the Contract Drawings and listed on the Bid Form. Payment will be made for each inflow dish installed and will represent full compensation for all labor, material, excavation, including rock, bedding, backfill, compaction, sheeting, testing and equipment required to complete this Pay Item. Included in this Pay Item, but not limited to, are all 304 stainless steel inflow dishes, as shown in the Contract Drawings. Submittal shall include a complete bill of materials for all equipment, showing dimensions and materials of construction of

all components, verifying that product will meet the standards specified in the Technical Specifications and Contract Drawings.

WASTEWATER SYSTEM PIPE LINING

PAY ITEM NO. 1 – MOBILIZATION

The work specified in this item consists of the preparatory work and operations in mobilizing for beginning work on the project This item includes, but is not limited to, those operations necessary for the movement of personnel, equipment, supplies and incidentals to and from the project site as a single occurrence per work site, and for the establishment of Subcontractor's temporary offices, buildings, safety equipment, first aid supplies, sanitary and other facilities, as required by these Specifications, special provisions, and State and local laws and regulations. The costs of bonds, permits and any required insurance, and any other preconstruction expense necessary for the start of the work, excluding the cost of construction materials, shall also be included in this item. Labor and equipment travel time from/to the site is included in this pay item.

The Contractor will be required to respond to the request of the Engineer, or designated representative within ten (10) calendar days of notification. The Scope of Work will be developed by Project manager and will be executed in accordance with the terms and conditions of this contract.

The quantity of mobilization to be paid for under this item shall be measured as one unit each (EA) per job assignment. One (1) mobilization will be allowed for each job assignment, project, or work order no matter how many times the equipment must be relocated by loading, transporting and unloading, or under its own power to complete the job assignment or project. Payment for mobilization shall not exceed 10 percent (10%) of the total Contract cost unless the Contractor can prove to the City that his actual mobilization cost exceeds 10 percent (10%).

PAY ITEMS NO. 2 – 14 – MAINTENANCE OF TRAFFIC

This work consists of maintaining traffic within the limits of the project for the duration of the construction period, including any temporary suspensions of the work. All Maintenance of Traffic (MOT) shall comply with FDOT Standard Plans Index 102 Series for Maintenance of Traffic. These pay items shall include labor and equipment to furnishing, installing and maintaining of traffic control and safety devices during construction; the construction and maintenance of any necessary detour facilities; providing necessary facilities for access to residences, businesses, pedestrian, schools, etc., control of dust and any other special requirements for safe and expeditious movement of traffic as may be called for on the plans. MOT shall include all of such facilities, devices and operations as are required for the safety and convenience of the public, as well as for minimizing public nuisance. The Contractor, however, shall not obstruct nor create a hazard to any traffic during the performance of the work and shall be responsible for repair of any damage to existing pavement or facilities caused by his operations. Traffic Control Devices include all types of barricades, arrow boards, signs, temporary pavement markers, lights, concrete barriers and permanent striping. All travel, equipment, labor overhead or any other associated expenses in transportation and setting out the MOT will be included in the price. All MOT line items for Multi-Lane work shall include all costs for items associated with the appropriate FDOT Index (no separate payment for signs, barricades, etc. included with index will be allowed).

Maintenance of Traffic (MOT) shall be measured as units of work, each/day (EA/DY), hourly (HR) or by linear foot (LF) accordingly completed and priced on an individual project basis. The lump sum price for each assignment will be based on the specific MOT requirements for the assignment. The Contractor shall provide the Engineer with a proposal for the MOT that includes a breakdown of the costs, which are included in the lump sum price, and receive written acceptance from the Engineer prior to the installation of the MOT.

PAY ITEM	DESCRIPTION	UNITS
2	Flagmen (Per-Flagmen)	HR
3	Multi Lane, Lane Closures (FDOT Index No. 613)	EA/DY
4	Multi Lane, Intersection (FDOT Index No. 615)	EA/DY
5	Arrow Boards - 5' Minimum Horizontal Size	EA/DY
6	Variable Message Board	EA/DY
7	Concrete Barrier (FDOT Index No. 100)	EA/DY
8	Low Profile Barrier (FDOT Index No. 120)	EA/DY
9	Signs in Work Zones	EA/DY
10	6" Solid line Thermo Plastic - Permanent	LF
11	24" Stop Bar, Solid, Thermo Plastic, Perm.	LF
12	6" Skip line (6'-10' Skip) Thermo Plastic-Perm.	LF
13	Barricades Type III, with Warning Lights	EA/DY
14	Barricades Type I or II, with Warning Lights	EA/DY

PAY ITEMS NO. 15 – 22 – CIPP MAIN LINER

Payment will be made per linear foot for the applicable pipe diameters and minimum thicknesses listed below, regardless of the depth or overall length. Measurement will be from the upstream manhole to the downstream manhole centerlines. Payment shall include all materials, labor, equipment, and supplies necessary for the CIPP Main Liner installation, and specifically includes, but is not limited to, pre-rehabilitation CCTV inspection, liner sampling and storage of samples for testing, sealing liner connections at manholes, matching existing manhole lining to the CIPP liner, matching existing flow channels and surfacing to the liner to minimize turbulence, cleaning, removal and disposal of all sand, rubble, deposits, and other accumulated debris after liner installation, post-rehabilitation CCTV inspection video and log, restoration, and all other appurtenant work as specified.

PAY ITEM	DESCRIPTION	UNITS
15	CIPP Main Liner 6” Diameter – 6.0 mm Thickness	LF
16	CIPP Main Liner 8” Diameter – 6.0 mm Thickness	LF
17	CIPP Main Liner 10” Diameter – 6.0 mm Thickness	LF
18	CIPP Main Liner 12” Diameter – 6.0 mm Thickness	LF
19	CIPP Main Liner 15” Diameter – 7.5 mm Thickness	LF
20	CIPP Main Liner 18” Diameter – 9.0 mm Thickness	LF
21	CIPP Main Liner 21” Diameter – 9.0 mm Thickness	LF
22	CIPP Main Liner 24” Diameter – 10.5 mm Thickness	LF

PAY ITEMS NO. 23 – 30 – CIPP MAIN LINER THICKNESS VARIANCE

Payment for CI PP Main Liner Thickness Variance will be made per linear foot for the applicable pipe diameters listed in the Proposal, regardless of depth or overall length. Liner thickness may be varied due to field conditions requiring a change in the specified minimum thickness. The per linear foot price for CIPP Main Liner Thickness Variance will be added to, or deducted from, the per linear foot price of the Main Liner for the applicable pipe diameter listed in the Bid Form (Pay Items 15 through 22). The Main Liner per linear foot price will be adjusted for each 1.5 mm thickness variance increment. Liner thickness shall be in accordance with Technical Specification Section headed "Cured-In-Place-Pipe (CIPP) " unless otherwise approved by the Engineer in writing.

PAY ITEM	DESCRIPTION	UNITS
23	CIPP Main Liner 6” Diameter – Thickness Variance + 1.5 mm	LF
24	CIPP Main Liner 8” Diameter – Thickness Variance + 1.5 mm	LF
25	CIPP Main Liner 10” Diameter – Thickness Variance + 1.5 mm	LF
26	CIPP Main Liner 12” Diameter – Thickness Variance + 1.5 mm	LF
27	CIPP Main Liner 15” Diameter – Thickness Variance + 1.5 mm	LF
28	CIPP Main Liner 18” Diameter – Thickness Variance + 1.5 mm	LF
29	CIPP Main Liner 21” Diameter – Thickness Variance + 1.5 mm	LF
30	CIPP Main Liner 24” Diameter – Thickness Variance + 1.5 mm	LF

PAY ITEMS NO. 31 – 38 – BYPASS PUMPING SETUP & OPERATION

This item provides for set up and operation of by-pass sewage pumping equipment and temporary piping as required and as described in the Standard Technical Specifications. This Pay Item is applicable on projects or repairs that have high flow or require an over night by pass operation.

The quantity to be measured for payment under this Pay Item will be the actual number of by-pass pumping set ups and operations, per part of day, required by the Engineer in the work. The minimum measurement for this pay item is eight (8) hours or 0.333 days and is measured from the time that the sewage is actually by-passed. This eight (8) hour minimum (0.333 days) includes full compensation for set up and operation for up to the first eight (8) hour period. Additional time will be in tenths of the day or twenty-four (24) hour period. The quantities determined shall be paid per day (DAY) or portion of day of by-pass pumping set up and operation.

PAY ITEM	DESCRIPTION	UNITS
31	Bypass Pumping, Set up, 6" - 10" diameter	EA
32	Bypass Pumping, Set up, 12" - 14" diameter	EA
33	Bypass Pumping, Set up, 15" - 21" diameter	EA
34	Bypass Pumping, Set up, 24" diameter	EA
35	Bypass Pumping, Operation, 6" - 10" diameter	DAY
36	Bypass Pumping, Operation, 12" - 14" diameter	DAY
37	Bypass Pumping, Operation, 15" - 21" diameter	DAY
38	Bypass Pumping, Operation, 24" diameter	DAY

PAY ITEMS NO. 39-42 – NORMAL CLEANING

Payment for Normal Cleaning will be made per linear foot for the applicable pipe diameters listed in the Bid Form, regardless of depth or overall length. Measurement will be from the upstream manhole to the downstream manhole centerlines and based on the average debris depth. Payment shall include all materials, labor, equipment, and supplies necessary for Normal Cleaning, and specifically includes, but is not limited to, the complete removal and disposal of all accumulated debris within the pipe including sludge, dirt, rocks, sand, rubble, and other materials and obstructions, restoration, and all other appurtenant work as specified. Separate Pay Items are provided for Specialty Cleaning.

PAY ITEM	DESCRIPTION	UNITS
39	Normal Cleaning – 6” and 8” Diameter	LF
40	Normal Cleaning – 10” and 12” Diameter	LF
41	Normal Cleaning – 15” and 18” Diameter	LF
42	Normal Cleaning – 21” and 24” Diameter	LF

PAY ITEMS NO. 43-46 – SPECIALTY CLEANING

Payment will be made per linear foot for the applicable pipe diameters listed in the Bid Form, regardless of depth or overall length. Measurement will be based on a minimum of 50 linear feet of pipe, or the actual length of the Specialty Cleaning performed, but not necessarily for the entire pipe segment length. Specialty Cleaning of only joints within a pipe segment, or portion thereof, shall count as 2.5 feet of equivalent pipe length (For Example: 400 feet of 8" pipe with 5 ft joints, clean all joints =80 joints x 2.5 ft =200 feet of specialty cleaning). Equivalent joint length shall not be counted in addition to the length of a pipe segment, or portion thereof, where continuous Specialty Cleaning has been performed. Payment shall include all materials, labor, equipment, and supplies necessary for Specialty Cleaning of wastewater pipe, and specifically includes, but is not limited to, the complete removal and disposal of all accumulated debris within the pipe including grease, roots, joint sealant, tuberculation, and other adherent deposits through the use of special equipment, restoration, and all other appurtenant work as specified. Specialty Cleaning is in addition to Normal Cleaning as described in Pay Items 39 through 42.

PAY ITEM	DESCRIPTION	UNITS
43	Normal Cleaning – 6” and 8” Diameter	LF
44	Normal Cleaning – 10” and 12” Diameter	LF

45	Normal Cleaning – 15” and 18” Diameter	LF
46	Normal Cleaning – 21” and 24” Diameter	LF

PAY ITEMS NO. 47-49 – CHEMICAL SEALING OF HOST PIPE

Payment will be made per each host pipe for the applicable pipe diameters listed in the Bid Form, regardless of depth, overall length, or the number of infiltration points sealed. Measurement will be for a host pipe between manholes. Payment shall include all materials, labor, equipment and supplies necessary for the Chemical Sealing of Host Pipe, and specifically includes, but is not limited to, sealing excessive infiltration at pipe joints and other defects, disposal of debris, post-rehabilitation CCTV inspection video and log, restoration, and all other appurtenant work as specified. A separate Pay Item is provided Chemical Sealing - Grout material.

PAY ITEM	DESCRIPTION	UNITS
47	Chemical Sealing of Host Pipe – 10” Diameter and Less	EA
48	Chemical Sealing of Host Pipe – 12” and 15” Diameter	EA
49	Chemical Sealing of Host Pipe – 18” to 24” Diameter	EA

PAY ITEM NO. 50 – CHEMICAL SEALING - GROUT

Payment will be made per gallon. This Pay item is applicable only in conjunction with Pay Items 47 through 49. Payment shall include all materials, equipment and labor for chemically sealing excessive infiltration at pipe joints and other defects at specified locations for Chemical Sealing of Host Pipe prior to CIPP liner installation.

PAY ITEM NO. 51 – REMOVAL & SEALING OF PROTRUDING SERVICE CONNECTIONS

Payment will be made per each service regardless of the connection diameter or main pipe diameter. Payment shall include all materials, labor, equipment and supplies necessary for the Removal & Sealing of Protruding Connections, and specifically includes, but is not limited to, removing protruding lateral by internal cutting or other remote methods, grouting the main/lateral connection, disposal of debris, post-rehabilitation CCTV inspection video and log, restoration, and all other appurtenant work as specified.

PAY ITEM NO. 52 – ADDITIONAL ACCESS COST MAIN LINER

Payment for Additional Access Cost Main Liner will be made per each access. Measurement will be for a liner installation where both the upstream and downstream manhole are not readily accessible by standard equipment, e.g., when located in rear easements. Payment shall include all additional labor, equipment, materials and supplies to complete the CIPP Main Liner installation in locations with limited access. The Contractor shall attempt to schedule and stage the Work to permit the lining of multiple, contiguous pipe segments from an accessible manhole where feasible.

PAY ITEM NO. 53 – SERVICE RECONNECTION

Payment will be made per each service regardless of the connection diameter or host pipe diameter, and regardless of depth or overall length of the host pipe. Payment shall include all materials, labor, equipment, and supplies necessary for the service reconnection, and specifically includes, but is not limited to, reconnecting service lateral by internal cutting or other remote methods, grouting the annular space between the liner and host pipe at the lateral connection and the first 18-inches of the service lateral, post-rehabilitation CCTV inspection video and log, disposal of debris, restoration, and all other appurtenant work as specified. No additional payment will be made for service reconnections made by excavation.

PAY ITEM NO. 54 – CIPP LINER TESTING

Payment will be made per each test. Measurement will be for a set of tests completed for a liner installation and accepted by the Engineer. Payment shall include all materials, labor, equipment, supplies, and expenses necessary for CIPP Liner Testing, and specifically includes, but is not limited to, preparing samples, laboratory testing, submitting the results to the Engineer, and all other appurtenant work as specified. The cost to obtain and store samples for testing, and any retesting of samples is not included in this Pay Item.

WASTEWATER SYSTEM POINT REPAIRS

PAY ITEM NO. 1 – MOBILIZATION FOR ROUTINE RESPONSE

The work specified in this item consists of the preparatory work and operations in mobilizing for beginning work on the project This item includes, but is not limited to, those operations necessary for the movement of personnel, equipment, supplies and incidentals to and from the project site as a single occurrence per work site, and for the establishment of Subcontractor's temporary offices, buildings, safety equipment, first aid supplies, sanitary and other facilities, as required by these Specifications, special provisions, and State and local laws and regulations. The costs of bonds, permits and any required insurance, and any other preconstruction expense necessary for the start of the work, excluding the cost of construction materials, shall also be included in this item. Labor and equipment travel time from/to the site is included in this pay item.

For routine work, as identified by the Engineer or his designee, the Contractor will be required to respond to the request of the Engineer, or designated representative within ten (10) calendar days of notification. The Scope of Work will be developed by Project manager and will be executed in accordance with the terms and conditions of this contract.

The quantity of mobilization to be paid for under this item shall be measured as one unit each (EA) per job assignment. One (1) mobilization will be allowed for each job assignment, project, or work order no matter how many times the equipment must be relocated by loading, transporting and unloading, or under its own power to complete the job assignment or project.

PAY ITEM NO. 2 – MOBILIZATION FOR EMERGENCY RESPONSE

The work specified in this item consists of the preparatory work and operations in mobilizing for beginning work on the project This item includes, but is not limited to, those operations necessary for the movement of personnel, equipment, supplies and incidentals to and from the project site as a single occurrence per work site, and for the establishment of Subcontractor's temporary offices, buildings, safety equipment, first aid supplies, sanitary and other facilities, as required by these Specifications, special provisions, and State and local laws and regulations. The costs of bonds, permits and any required insurance, and any other preconstruction expense necessary for the start of the work, excluding the cost of construction materials, shall also be included in this item. Labor and equipment travel time from/to the site is included in this pay item.

For emergency work, as identified by the Engineer or his designee, the Contractor will be required to respond to the request of the Engineer, or designated representative within ten (10) calendar days of notification. The Scope of Work will be developed by Project manager and will be executed in accordance with the terms and conditions of this contract.

The quantity of mobilization to be paid for under this item shall be measured as one unit each (EA) per job assignment. One (1) mobilization will be allowed for each job assignment, project, or work order no matter how many times the equipment must be relocated by loading, transporting and unloading, or under its own power to complete the job assignment or project.

PAY ITEMS NO. 3 – 15 – MAINTENANCE OF TRAFFIC

This work consists of maintaining traffic within the limits of the project for the duration of the construction period, including any temporary suspensions of the work. All Maintenance of Traffic (MOT) shall comply with FDOT Standard Plans Index 102 Series for Maintenance of Traffic. These pay items shall include labor and equipment to furnishing, installing and maintaining of traffic control and safety devices during construction; the construction and maintenance of any necessary detour facilities; providing necessary facilities for access to residences, businesses, pedestrian, schools, etc., control of dust and any other special requirements for safe and expeditious movement of traffic as may be called for on the plans. MOT shall include all of such facilities, devices and operations as are required for the safety and convenience of the public, as well as for minimizing public nuisance. The Contractor, however, shall not obstruct nor create a hazard to any traffic during the performance of the work and shall be responsible for repair of any damage to existing pavement or facilities caused by his operations. Traffic Control Devices include all types of barricades, arrow boards, signs, temporary pavement markers, lights, concrete barriers and permanent striping. All travel, equipment, labor overhead or any other associated expenses in transportation and setting out the MOT will be included in the price. All MOT line items for Multi-Lane work shall include all costs for items associated with the appropriate FDOT Index (no separate payment for signs, barricades, etc. included with index will be allowed).

Maintenance of Traffic (MOT) shall be measured as units of work, each/day (EA/DY), hourly (HR) or by linear foot (LF) accordingly completed and priced on an individual project basis. The lump sum price for each assignment will be based on the specific MOT requirements for the assignment. The Contractor shall provide the Engineer with a proposal for the MOT that includes a breakdown of the costs, which are included in the lump sum price, and receive written acceptance from the Engineer prior to the installation of the MOT.

PAY ITEM	DESCRIPTION	UNITS
3	Flagmen (Per-Flagmen)	HR
4	Multi Lane, Lane Closures (FDOT Index No. 613)	EA/DY
5	Multi Lane, Intersection (FDOT Index No. 615)	EA/DY
6	Arrow Boards - 5' Minimum Horizontal Size	EA/DY
7	Variable Message Board	EA/DY
8	Concrete Barrier (FDOT Index No. 100)	EA/DY
9	Low Profile Barrier (FDOT Index No. 120)	EA/DY
10	Signs in Work Zones	EA/DY
11	6" Solid line Thermo Plastic - Permanent	LF
12	24" Stop Bar, Solid, Thermo Plastic, Perm.	LF
13	6" Skip line (6'-10' Skip) Thermo Plastic-Perm.	LF
14	Barricades Type III, with Warning Lights	EA/DY
15	Barricades Type I or II, with Warning Lights	EA/DY

PAY ITEM NO. 16 – AS-BUILT SURVEY

Payment for all work included, but is not limited to, under this Pay Item shall represent full

compensation in accordance with the lump sum price bid for as-built record drawings or any other required certifications to put the proposed system in service. All items are subject to approval by the Engineer.

The quantity to be paid for under this pay item shall per as-built survey completed by a professional surveyor based on the linear foot of sewer main installed.

PAY ITEM NO. 17 – EXCAVATION, UNSUITABLE MATERIAL

The work specified in this item describes the removal of soil unsuitable for a proper foundation, encountered at trench grade. The unsuitable soil shall be removed and disposed of the full width of the trench and to the depth required by the Engineer and replaced with approved bedding material. The backfill shall be thoroughly compacted and shaped to form the pipe bed.

The quantity to be paid for under this Item shall be the volume in cubic yards (CY), computed by the average end area method, of the unsuitable material removed within the limits of depth shown on the Plans or as directed by the Engineer or his representative.

PAY ITEMS NO. 18 & 19 – SHEETING AND BRACING, ADDITIONAL

The quantities to be paid for under this item shall be the number of square feet of sheeting installed in addition to 6’ of depth. The quantities to be paid for under this item shall be based on the square feet of sheeting installed and accepted.

PAY ITEM	DESCRIPTION	UNITS
18	Sheeting & Bracing (Left in Place)	SF
19	Sheeting & Bracing, Pipe Trenches (Removed)	SF

PAY ITEMS NO. 20 - 25 – WELL POINT DEWATERING INITIAL

Measurement and payment of this pay item is based on the set up of dewatering equipment as required by the Contractor and allowed or directed by the Engineer to perform contracted work in accordance with the Technical Specifications. The work shall include all labor, equipment and materials, testing, and any required incidentals necessary to completely install, monitor and operate the dewatering system including the placement of up to twenty (20) well points to the various depths listed in the proposal per job assignment. The dewatering system shall stabilize the excavation and remain in operation until backfilling operations are complete. This pay item shall include the maintenance, repairs, pumps, fueling, oiling greasing, and other operational support procedures and supplies required for the operation of the system.

Well point dewatering is an authorized pay item only when the installation is below 6 feet in depth and site conditions warrant or on emergency response work where site conditions warrant as directed by the City representative.

The quantities to be paid for under this item shall be based on the depth of each (EA) dewatering

system per job assignment, installed and accepted.

PAY ITEM	DESCRIPTION	UNITS
20	Well Point Dewatering Initial – 6'-8' Deep	EA
21	Well Point Dewatering Initial – 8'-10' Deep	EA
22	Well Point Dewatering Initial – 10'-12' Deep	EA
23	Well Point Dewatering Initial – 12'-14' Deep	EA
24	Well Point Dewatering Initial – 14'-16' Deep	EA
25	Well Point Dewatering Initial – >16' Deep	EA

PAY ITEMS NO. 26 – 31 – WELL POINT DEWATERING ADDITIONAL

This item provides all labor, materials and equipment for the placement and operation of additional well points over and above the twenty (20) well points paid for under Pay Items 20-25. The work includes connection of the well points to the dewatering pumping equipment.

The quantity to be paid under this item will be the actual number of each (EA) well points placed and operated in the work as directed by Engineer for the various depths listed in the proposal less the twenty (20) paid for under Pay Items 20-25.

PAY ITEM	DESCRIPTION	UNITS
26	Well Point Dewatering Additional – 6'-8' Deep	EA
27	Well Point Dewatering Additional – 8'-10' Deep	EA
28	Well Point Dewatering Additional – 10'-12' Deep	EA
29	Well Point Dewatering Additional – 12'-14' Deep	EA
30	Well Point Dewatering Additional – 14'-16' Deep	EA
31	Well Point Dewatering Additional – >16' Deep	EA

PAY ITEMS NO. 32 – 35 – JACK & BORE

The work consists of furnishing all labor, equipment and materials and installing the crossing listed on the Bid Form by the jack and bore method in accordance with the specifications. The unit price shall include all costs necessary to install the crossing at the specified depth and size, including survey layout (based upon property monuments established by others), protection of property, materials, dewatering, pavement cutting, launching and receiving pits, exploratory pits, restrained joints, carrier pipe, tracer wire, tracer wire testing, casing pipe, casing spacers, casing end seals, fitting material including joints and jointing material, bracing, utility crossings, barricades, clearing, grubbing and stripping of the right-of-way, trenching, bedding and backfilling, protection of existing utilities; pigging, flushing and cleaning, pressure testing and As-built documentation. Surface restoration if specified or directed, will be paid for under other Pay Items.

The quantity for furnishing and installing the pipe or casing shall be made on a per linear foot basis as measured horizontally above the centerline of the casing including the length of four (4) feet beyond the edge of pavement or back of the concrete curb from each side of the road or driveway.

PAY ITEM	DESCRIPTION	UNITS
32	Jack & Bore 12” x 0.188” Steel Casing (6” GS)	LF
33	Jack & Bore 16” x 0.219” Steel Casing (8” GS)	LF
34	Jack & Bore 20” x 0.250” Steel Casing (10” GS)	LF
35	Jack & Bore 24” x 0.281” Steel Casing (12” GS)	LF

PAY ITEMS NO. 36 – 41 – DIRECTIONAL DRILL

The work consists of furnishing and installing underground sewer mains using the horizontal directional drilling (HDD) method of installation. This work shall include all services, equipment, materials, labor, installation of two 14 gauge minimum tracer wires, tracer wire testing, appurtenances, DI/HDPE mechanical joint adapters, pipe and joint restraints for connections to fittings, materials above or below ground along pipeline alignment; joints and jointing materials, bentonite clay slurry seal, launching and receiving pits, exploratory pits; bracing, bedding and backfill, disposal of spoil; pressure testing; pigging, flushing, cleaning erosion protection and control, surface grading, and all other related and necessary materials for the complete and proper installation, testing, and restoration of underground sewer mains

Measurement for payment for furnishing and installing HDD pipe for drill depths up to 20-foot-deep shall be made on a per linear foot (LF) basis as measured horizontally on the ground above the pipe centerline through valves and fittings for all pipe. Measurement for payment for finishing and installation HDD pipe for drill depths greater than 20-foot depth shall be made on a per linear foot (LF) basis of the actual length of pipe installed.

PAY ITEM	DESCRIPTION	UNITS
36	2” Directional Drill HDPE DR 9, IPS	LF
37	4” Directional Drill HDPE DR 11, DIPS	LF
38	6” Directional Drill HDPE DR 11, DIPS	LF
39	8” Directional Drill HDPE DR 11, DIPS	LF
40	10” Directional Drill HDPE DR 11, DIPS	LF
41	12” Directional Drill HDPE DR 11, DIPS	LF

PAY ITEMS NO. 42 – 146 – GRAVITY SANITARY SEWER

The work consists of furnishing all labor, equipment and materials for installing pipe as shown on the plans or directed by the Engineer. All ductile iron pipe shall have polyethylene encasement. The unit price shall include all costs necessary to install the pipe including survey layout (based upon property monuments established by others), clearing and grubbing, excavation, sheeting/shoring for excavation up to 6-ft deep, bracing, dewatering for excavations up to 6-ft deep, structural fill, material, polyethylene wrap on ductile iron pipe, testing, pavement cutting, trenching, utility crossings, barricades, clearing of the right-of-way, protection of property, backfilling, field layout, etc. Restoration will be paid for under separate pay items. Work performed for Point Repairs of gravity sewer pipes will be paid for under separate pay items.

The quantities of pipe to be paid for under this item shall be the length in linear feet of pipe measured along the centerline of the pipe through manholes in place, completed, tested, and accepted.

PAY ITEM	DESCRIPTION	UNITS
42	6" PVC Pipe, C-900 DR 18 (Gravity Sewer) 0' - 6' Depth	LF
43	6" PVC Pipe, C-900 DR 18 (Gravity Sewer) 6' - 8' Depth	LF
44	6" PVC Pipe, C-900 DR 18 (Gravity Sewer) 8' - 10' Depth	LF
45	6" PVC Pipe, C-900 DR 18 (Gravity Sewer) 10' - 12' Depth	LF
46	6" PVC Pipe, C-900 DR 18 (Gravity Sewer) 12' - 14' Depth	LF
47	6" PVC Pipe, C-900 DR 18 (Gravity Sewer) 14' - 16' Depth	LF
48	6" PVC Pipe, C-900 DR 18 (Gravity Sewer) 16' - 18' Depth	LF
49	8" DI Pipe, CL 350 (Gravity Sewer) 0' - 6' Depth	LF
50	8" DI Pipe, CL 350 (Gravity Sewer) 6' - 8' Depth	LF
51	8" DI Pipe, CL 350 (Gravity Sewer) 8' - 10' Depth	LF
52	8" DI Pipe, CL 350 (Gravity Sewer) 10' - 12' Depth	LF
53	8" DI Pipe, CL 350 (Gravity Sewer) 12' - 14' Depth	LF
54	8" DI Pipe, CL 350 (Gravity Sewer) 14' - 16' Depth	LF
55	8" DI Pipe, CL 350 (Gravity Sewer) 16' - 18' Depth	LF
56	8" PVC Pipe, C-900 DR 18 (Gravity Sewer) 0' - 6' Depth	LF
57	8" PVC Pipe, C-900 DR 18 (Gravity Sewer) 6' - 8' Depth	LF
58	8" PVC Pipe, C-900 DR 18 (Gravity Sewer) 8' - 10' Depth	LF
59	8" PVC Pipe, C-900 DR 18 (Gravity Sewer) 10' - 12' Depth	LF
60	8" PVC Pipe, C-900 DR 18 (Gravity Sewer) 12' - 14' Depth	LF
61	8" PVC Pipe, C-900 DR 18 (Gravity Sewer) 14' - 16' Depth	LF
62	8" PVC Pipe, C-900 DR 18 (Gravity Sewer) 16' - 18' Depth	LF
63	10" DI Pipe, CL 350 (Gravity Sewer) 0' - 6' Depth	LF

64	10" DI Pipe, CL 350 (Gravity Sewer) 6' - 8' Depth	LF
65	10" DI Pipe, CL 350 (Gravity Sewer) 8' - 10' Depth	LF
66	10" DI Pipe, CL 350 (Gravity Sewer) 10' - 12' Depth	LF
67	10" DI Pipe, CL 350 (Gravity Sewer) 12' - 14' Depth	LF
68	10" DI Pipe, CL 350 (Gravity Sewer) 14' - 16' Depth	LF
69	10" DI Pipe, CL 350 (Gravity Sewer) 16' - 18' Depth	LF
70	10" PVC Pipe, C-900 DR 18 (Gravity Sewer) 0' -6' Depth	LF
71	10" PVC Pipe, C-900 DR 18 (Gravity Sewer) 6' - 8' Depth	LF
72	10" PVC Pipe, C-900 DR 18 (Gravity Sewer) 8' - 10' Depth	LF
73	10" PVC Pipe, C-900 DR 18 (Gravity Sewer) 10' - 12' Depth	LF
74	10" PVC Pipe, C-900 DR 18 (Gravity Sewer) 12' - 14' Depth	LF
75	10" PVC Pipe, C-900 DR 18 (Gravity Sewer) 14' - 16' Depth	LF
76	10" PVC Pipe, C-900 DR 18 (Gravity Sewer) 16' - 18' Depth	LF
77	12" DI Pipe, CL 350 (Gravity Sewer) 0' - 6' Depth	LF
78	12" DI Pipe, CL 350 (Gravity Sewer) 6' - 8' Depth	LF
79	12" DI Pipe, CL 350 (Gravity Sewer) 8' - 10' Depth	LF
80	12" DI Pipe, CL 350 (Gravity Sewer) 10' - 12' Depth	LF
81	12" DI Pipe, CL 350 (Gravity Sewer) 12' - 14' Depth	LF
82	12" DI Pipe, CL 350 (Gravity Sewer) 14' - 16' Depth	LF
83	12" DI Pipe, CL 350 (Gravity Sewer) 16' - 18' Depth	LF
84	12" PVC Pipe, C-900 DR 18 (Gravity Sewer) 0' ' 6' Depth	LF
85	12" PVC Pipe, C-900 DR 18 (Gravity Sewer) 6' - 8' Depth	LF
86	12" PVC Pipe, C-900 DR 18 (Gravity Sewer) 8' - 10' Depth	LF
87	12" PVC Pipe, C-900 DR 18 (Gravity Sewer) 10' - 12' Depth	LF

88	12" PVC Pipe, C-900 DR 18 (Gravity Sewer) 12' - 14' Depth	LF
89	12" PVC Pipe, C-900 DR 18 (Gravity Sewer) 14' - 16' Depth	LF
90	12" PVC Pipe, C-900 DR 18 (Gravity Sewer) 16' - 18' Depth	LF
91	16" DI Pipe, CL 350 (Gravity Sewer) 0' - 6' Depth	LF
92	16" DI Pipe, CL 350 (Gravity Sewer) 6' - 8' Depth	LF
93	16" DI Pipe, CL 350 (Gravity Sewer) 8' - 10' Depth	LF
94	16" DI Pipe, CL 350 (Gravity Sewer) 10' - 12' Depth	LF
95	16" DI Pipe, CL 350 (Gravity Sewer) 12' - 14' Depth	LF
96	16" DI Pipe, CL 350 (Gravity Sewer) 14' - 16' Depth	LF
97	16" DI Pipe, CL 350 (Gravity Sewer) 16' - 18' Depth	LF
98	16" PVC Pipe, C-905 DR 18 (Gravity Sewer) 0' - 6' Depth	LF
99	16" PVC Pipe, C-905 DR 18 (Gravity Sewer) 6' - 8' Depth	LF
100	16" PVC Pipe, C-905 DR 18 (Gravity Sewer) 8' - 10' Depth	LF
101	16" PVC Pipe, C-905 DR 18 (Gravity Sewer) 10' - 12' Depth	LF
102	16" PVC Pipe, C-905 DR 18 (Gravity Sewer) 12' - 14' Depth	LF
103	16" PVC Pipe, C-905 DR 18 (Gravity Sewer) 14' - 16' Depth	LF
104	16" PVC Pipe, C-905 DR 18 (Gravity Sewer) 16' - 18' Depth	LF
105	18" DI Pipe, CL 350 (Gravity Sewer) 0' - 6' Depth	LF
106	18" DI Pipe, CL 350 (Gravity Sewer) 6' - 8' Depth	LF
107	18" DI Pipe, CL 350 (Gravity Sewer) 8' - 10' Depth	LF
108	18" DI Pipe, CL 350 (Gravity Sewer) 10' - 12' Depth	LF
109	18" DI Pipe, CL 350 (Gravity Sewer) 12' - 14' Depth	LF
110	18" DI Pipe, CL 350 (Gravity Sewer) 14' - 16' Depth	LF
111	18" DI Pipe, CL 350 (Gravity Sewer) 16' - 18' Depth	LF
112	18" PVC Pipe, C-905 DR 21 (Gravity Sewer) 0' - 6' Depth	LF

113	18" PVC Pipe, C-905 DR 21 (Gravity Sewer) 6' - 8' Depth	LF
114	18" PVC Pipe, C-905 DR 21 (Gravity Sewer) 8' - 10' Depth	LF
115	18" PVC Pipe, C-905 DR 21 (Gravity Sewer) 10' - 12' Depth	LF
116	18 PVC Pipe, C-905 DR 21 (Gravity Sewer) 12' - 14' Depth	LF
117	18" PVC Pipe, C-905 DR 21 (Gravity Sewer) 14' - 16' Depth	LF
118	18" PVC Pipe, C-905 DR 21 (Gravity Sewer) 16' - 18' Depth	LF
119	21" DI Pipe, CL 350 (Gravity Sewer) 0' - 6' Depth	LF
120	21" DI Pipe, CL 350 (Gravity Sewer) 6' - 8' Depth	LF
121	21" DI Pipe, CL 350 (Gravity Sewer) 8' - 10' Depth	LF
122	21" DI Pipe, CL 350 (Gravity Sewer) 10' - 12' Depth	LF
123	21" DI Pipe, CL 350 (Gravity Sewer) 12' - 14' Depth	LF
124	21" DI Pipe, CL 350 (Gravity Sewer) 14' - 16' Depth	LF
125	21" DI Pipe, CL 350 (Gravity Sewer) 16' - 18' Depth	LF
126	21" PVC Pipe, C-905 DR 21 (Gravity Sewer) 0' - 6' Depth	LF
127	21" PVC Pipe, C-905 DR 21 (Gravity Sewer) 6' - 8' Depth	LF
128	21" PVC Pipe, C-905 DR 21 (Gravity Sewer) 8' - 10' Depth	LF
129	21" PVC Pipe, C-905 DR 21 (Gravity Sewer) 10' - 12' Depth	LF
130	21" PVC Pipe, C-905 DR 21 (Gravity Sewer) 12' - 14' Depth	LF
131	21" PVC Pipe, C-905 DR 21 (Gravity Sewer) 14' - 16' Depth	LF
132	21" PVC Pipe, C-905 DR 21 (Gravity Sewer) 16' - 18' Depth	LF
133	24" DI Pipe, CL 350 (Gravity Sewer) 0' - 6' Depth	LF
134	24" DI Pipe, CL 350 (Gravity Sewer) 6' - 8' Depth	LF
135	24" DI Pipe, CL 350 (Gravity Sewer) 8' - 10' Depth	LF
136	24" DI Pipe, CL 350 (Gravity Sewer) 10' - 12' Depth	LF

137	24" DI Pipe, CL 350 (Gravity Sewer) 12' - 14' Depth	LF
138	24" DI Pipe, CL 350 (Gravity Sewer) 14' - 16' Depth	LF
139	24" DI Pipe, CL 350 (Gravity Sewer) 16' - 18' Depth	LF
140	24" PVC Pipe, C-905 DR 21 (Gravity Sewer) 0' - 6' Depth	LF
141	24" PVC Pipe, C-905 DR 21 (Gravity Sewer) 6' - 8' Depth	LF
142	24" PVC Pipe, C-905 DR 21 (Gravity Sewer) 8' - 10' Depth	LF
143	24" PVC Pipe, C-905 DR 21 (Gravity Sewer) 10' - 12' Depth	LF
144	24" PVC Pipe, C-905 DR 21 (Gravity Sewer) 12' - 14' Depth	LF
145	24" PVC Pipe, C-905 DR 21 (Gravity Sewer) 14' - 16' Depth	LF
146	24" PVC Pipe, C-905 DR 21 (Gravity Sewer) 16' - 18' Depth	LF

PAY ITEM NO. 147 – INSTALL PVC CLEANOUT

The work consists of furnishing all labor, equipment, and materials for installation of a new PVC riser pipe and cleanout at the ROW line (or other location as directed by the Engineer) on existing sewer lateral. The existing sewer lateral material may be PVC, Vitrified Clay, or DIP pipe. The unit price shall include all costs necessary to install riser pipe and cleanout including survey layout (based upon property monuments established by others), material, polyethylene wrap on ductile iron pipe, fittings, pipe cutting, wye unit on main, installation of riser pipe and cleanout, pavement cutting, trenching, dewatering for excavations up to 6-ft deep, sheeting for excavations up to 6-ft deep, bracing, utility crossings, barricades, clearing of the right-of-way, protection of property, backfilling, field layout, restoration, sodding, etc. The pay item shall include cleanout installation up to ten (10) feet in depth.

The quantities of pipe to be paid for under this item shall be each measured and inspected in place, completed, and accepted.

PAY ITEM NO. 148 – REPLACE PVC CLEAN OUT WITH MANHOLE STRUCTURE

The work consists of furnishing all labor, equipment, and materials for the replacement of an existing PVC clean out with a concrete manhole. The unit price shall include all costs necessary to replace clean out including survey layout (based on property monuments established by others), material, fittings, pipe cutting, concrete manhole installation, pavement cutting, trenching, dewatering for excavations up to 6-ft deep, bracing, utility crossings, barricades, clearing of the right-of-way, protection of property, backfilling, field layout, restoration, sodding, etc. The pay item shall include the removal of clean outs and installation of manholes up to four (4) feet in depth.

The quantities of manholes to be paid for under this item shall be each measured and inspected in place, completed, and accepted.

PAY ITEMS NO. 149 – 153 – REMOVE PIPE (GRAVITY SEWER)

The work consists of furnishing all labor and equipment to remove and dispose of out of service mains. Unless otherwise indicted by the Engineer or his representative, the pipe removed becomes the property of the Contractor. The unit price shall include all costs necessary to remove the pipe (including fittings, valves, reverse deadmen, etc.) including pavement cutting, trenching, replacement of base material, dewatering for excavations up to 6- ft deep, sheeting for excavations up to 6-ft deep, bracing, utility crossings, barricades, clearing of the right-of-way, protection of property, backfilling, restoration of pavement and grass, etc.

The quantities of pipe removal to be paid for under this Item shall be the length in linear feet (LF) of pipe measured along the centerline of the pipe through valves and fittings actually removed.

PAY ITEM	DESCRIPTION	UNITS
149	Remove Pipe 2” or 4” (Gravity Sewer)	LF
150	Remove Pipe 6” or 8” (Gravity Sewer)	LF
151	Remove Pipe 10” or 12” (Gravity Sewer)	LF
152	Remove Pipe 15”, 16”, or 18” (Gravity Sewer)	LF
153	Remove Pipe 21” or 24” (Gravity Sewer)	LF

PAY ITEMS NO. 154 – 167 – INSTALL OR ADJUST SERVICE LATERAL

The work consists of furnishing all labor, equipment, by-pass operations, customer coordination and materials for installation of a new or relocating a sanitary sewer service lateral found to be in conflict with proposed improvement or as directed by the Engineer. The unit price shall include all costs necessary to install up 30 linear feet of service pipe including survey layout (based upon property monuments established by others), material, polyethylene wrap on ductile iron pipe, fittings, pipe cutting, wye unit on main, installation of riser pipe and cleanout at the ROW line, pavement cutting, trenching, dewatering for excavations up to 6-ft deep, sheeting for excavations up to 6-ft deep, bracing, utility crossings, barricades, clearing of the right-of-way, protection of property, backfilling, field layout, etc. Service pipe lengths in excess of 30 feet will be paid for as Gravity Sewer Pipe (Pay Items 41-145). Restoration will be paid for under separate pay items.

The quantities of pipe to be paid for under this item shall be each measured and inspected in place, completed, and accepted.

PAY ITEM	DESCRIPTION	UNITS
154	4" Pipe - Install or Adjust Service Lateral 0'-6' Deep	EA
155	4" Pipe - Install or Adjust Service Lateral 6'-8' Deep	EA
156	4" Pipe - Install or Adjust Service Lateral 8'-10' Deep	EA
157	4" Pipe - Install or Adjust Service Lateral 10'-12' Deep	EA

158	4" Pipe - Install or Adjust Service Lateral 12'-14' Deep	EA
159	4" Pipe - Install or Adjust Service Lateral 14'-16' Deep	EA
160	4" Pipe - Install or Adjust Service Lateral 16'-18' Deep	EA
161	6" Pipe - Install or Adjust Service Lateral 0'-6' Deep	EA
162	6" Pipe - Install or Adjust Service Lateral 6'-8' Deep	EA
163	6" Pipe - Install or Adjust Service Lateral 8'-10' Deep	EA
164	6" Pipe - Install or Adjust Service Lateral 10'-12' Deep	EA
165	6" Pipe - Install or Adjust Service Lateral 12'-14' Deep	EA
166	6" Pipe - Install or Adjust Service Lateral 14'-16' Deep	EA
167	6" Pipe - Install or Adjust Service Lateral 16'-18' Deep	EA

PAY ITEMS NO. 168 – 177 – SEWER LINE MANHOLE CONNECTION

The work consists of all labor, equipment, investigative digging, and materials for repair of an existing connection into manhole wall or to install a new connection. All core drills shall be of sufficient diameter to accommodate pipe connection. Manhole connections may be either gravity sewer or sewer forcemain. All connections shall include a water stop or boot connection. Payment shall also include core drills, masonry or concrete patching, fiberglass and interior surface patching, shoring, dewatering for excavations up to 6-ft deep, backfill, refill, compaction operations, and compaction testing or re-testing. All sewer forcemain connections shall include installation of a drop bowl, paid for under Pay Items 177-186. The work does not include excavation or surface restoration which, if required, will be paid for, or is part of the work, under other Pay Items.

The quantities of connections into manholes to be paid under this item shall be each measured in place, completed, inspected, and accepted.

PAY ITEM	DESCRIPTION	UNITS
168	2" Sewer Line Manhole Connection	EA
169	4" Sewer Line Manhole Connection	EA
170	6" Sewer Line Manhole Connection	EA
171	8" Sewer Line Manhole Connection	EA
172	10" Sewer Line Manhole Connection	EA
173	12" Sewer Line Manhole Connection	EA
174	16" Sewer Line Manhole Connection	EA
175	18" Sewer Line Manhole Connection	EA
176	21” Sewer Line Manhole Connection	EA
177	24” Sewer Line Manhole Connection	EA

PAY ITEMS NO. 178 – 187 – INSIDE DROP CONNECTION

This item provides for all labor, equipment and material to install a PVC drop connection inside an existing manhole. This work includes all interior piping, drop bowl and any masonry or concrete

and coatings patching required to complete a repair connection or install a new drop connection to an existing manhole in accordance with Technical Specifications.

The quantity to be measured for payment under this Pay Item will be the actual number each (EA) of manhole inside drop connections completed and accepted.

PAY ITEM	DESCRIPTION	UNITS
178	2" Inside Drop Connection	EA
179	4" Inside Drop Connection	EA
180	6" Inside Drop Connection	EA
181	8" Inside Drop Connection	EA
182	10" Inside Drop Connection	EA
183	12" Inside Drop Connection	EA
184	15"/16" Inside Drop Connection	EA
185	18" Inside Drop Connection	EA
186	21" Inside Drop Connection	EA
187	24" Inside Drop Connection	EA

PAY ITEM NO. 188 – GROUTING OUT OF SERVICE PIPE (FORCE MAIN)

This item provides for all labor, equipment and material to install chemical grout or flowable fill into an existing pipe to be abandoned. Prior to grout filling the line, the Contractor shall verify that no live services remain connected to the line. The underground conduit (pipe, waterline, sewer line, storm drain line, etc.) be completely filled with a low strength cement grout (or flowable fill). In order to achieve this, the grout to be pumped into the line shall have a consistency that will permit forced flow into the entire length of line. Blocking the line by intermediate excavation and gravity flow concrete or grout is NOT acceptable. The existing line to be grout filled shall be exposed and plugged with concrete bulkheads or plugs at both ends. The grout shall be pumped through the pipe until the grout is visible at the other end of the underground conduit. No more than 15 psi shall be used to pump the grout mixture, and care should be used to avoid grout filling adjoining voids.

The quantities of pipe to be paid for under this Item shall be the volume in cubic yards of the inside pipe area times the length of pipe. No payment will be made for material that escapes the pipe or ends enclosures.

PAY ITEMS NO. 189 – 191 – DISCONNECT & PLUG PIPE

The work consists of furnishing all labor, equipment and materials to disconnect and cap/plug sewer mains that will remain in or out of service. The unit price shall include all nuts, bolts, gaskets, caps/plugs, restraint devices, thrust blocks, cutting existing pipe, removal of valve boxes, blow-off assemblies, scheduling and notification of service interruptions and all other operations required to disconnect and cap/plug the water mains.

The quantity of disconnect and cap/plug water mains to be paid for under this item shall be the

number each (EA) measured in place, completed and accepted.

PAY ITEM	DESCRIPTION	UNITS
189	Disconnect & Plug 2" or 4" Pipe	EA
190	Disconnect & Plug 6" or 8" Pipe	EA
191	Disconnect & Plug 10" or 12" Pipe	EA

PAY ITEMS NO. 192 – 202 – SANITARY SEWER FORCE MAIN

The work consists of furnishing all labor, equipment and materials and installing sanitary forcemain pipe by the open-cut method in accordance with the specifications.

The unit price shall include all costs necessary to install the pipe up to 6 feet in depth, including: survey layout (based upon property monuments established by others); protection of property; protection of existing utilities, mailboxes and service connections; erosion protection (silt fence, hay bales, floating turbidity barriers, or other means, as required); materials, pavement cutting, extra pipe fitting material including joints/jointing material/restraints; shoring, sheeting for excavations up to 6-ft deep; bracing; utility crossings; barricades; clearing; grubbing and stripping of the right-of-way; trenching, bedding and backfilling; pigging; flushing and cleaning; pressure testing. Fittings shall be included in the cost of 2” pipe. Dual tracer wire and tracer wire testing shall be included in the price for PVC pipe items. Polyethylene encasement shall be included in the bid price for DI pipe items. Restoration will be paid for under separate pay items.

Additional payment will be made for extra depth installation over six feet under a separate pay item. Well point dewatering is an authorized pay item only when the installation is below 6 feet in depth and site conditions warrant; all dewatering up to 6 feet in depth is included in this pay item.

The quantities of pipe to be paid for under this Item shall be the length in linear feet of pipe measured along the centerline of the pipe in place, completed, tested, and accepted.

PAY ITEM	DESCRIPTION	UNITS
192	2" PVC Restrained Joint Pipe & Fittings FM, SDR 21	LF
193	4" PVC Pipe, C-900 DR 18 (Force Main)	LF
194	4" PVC Restrained Joint Pipe & Fittings FM, C-900 DR 18	LF
195	6" PVC Pipe, C-900 DR 18 (Force Main)	LF
196	6" PVC Restrained Joint Pipe & Fittings FM, C-900 DR 18	LF
197	8" PVC Pipe, C-900 DR 18 (Force Main)	LF
198	8" PVC Restrained Joint Pipe & Fittings FM, C-900 DR 18	LF
199	10" PVC Pipe, C-900 DR 18 (Force Main)	LF
200	10" PVC Restrained Joint Pipe & Fittings FM, C-900 DR 18	LF

201	12" PVC Pipe, C-900 DR 18 (Force Main)	LF
202	12" PVC Restrained Joint Pipe & Fittings FM, C-900 DR 18	LF

PAY ITEMS NO. 203 – 208 – RESTRAINED JOINTS

The work specified in this item describes measurement and payment for furnishing all labor, equipment and materials and installing restrained joint hardware including mechanical joint restrainers, bell restrainers and PVC restrainers complete including bolts, gaskets, rods, special flanges, color coded polyethylene encasement , testing, acceptance, and ready for service. Restrained joints for pipe associated with fittings per the design of new pipe shall be paid for under separate pay item. This item shall only be used to restrain existing in-service pipelines or to install additional restraints above the amount specified, as directed by the Engineer or his representative.
`

The quantities of retrained joints to be paid for under this item shall be the number of each (EA) measured in place and accepted. No restrained joint hardware or any part of a restrained joint hardware shall be included for payment under more than one Item.

PAY ITEM	DESCRIPTION	UNITS
203	2" Restrained Joints	EA
204	4" Restrained Joints	EA
205	6" Restrained Joints	EA
206	8" Restrained Joints	EA
207	10" Restrained Joints	EA
208	12" Restrained Joints	EA

PAY ITEMS NO. 209 – 211 - FORCE MAIN OVER DEPTH EXCAVATION

The work consists of furnishing all labor and equipment to excavate additional depth greater than 6 feet depth for installation of sewer forcemain pipe by the open-cut method in accordance with the specifications. The unit price shall include all costs necessary to excavate additional depth over 6 feet including: survey layout (based upon property monuments established by others); protection of property, existing utilities, mailboxes and service connections; erosion protection (silt fence, hay bales, floating turbidity barriers, or other means, as required); materials; pavement cutting; bracing; utility crossings; barricades; clearing; grubbing and stripping of the right-of-way; trenching, bedding; and backfilling. Well point dewatering and sheeting are authorized pay items when the installation is below 6 feet in depth and site conditions warrant.

Measurement for payment for excavating each additional foot of depth to install pipe or appurtenances shall be made on a per linear foot (LF) basis for each additional vertical foot of depth over 6 feet as measured horizontally above the pipe centerline through valves and fittings.

PAY ITEM	DESCRIPTION	UNITS
209	2"-4" Forcemain Pipe and Appurtenances - Over Depth Excavation	LF

210	6"-8" Forcemain Pipe and Appurtenances - Over Depth Excavation	LF
211	10"-12" Forcemain Pipe and Appurtenances - Over Depth Excavation	LF

PAY ITEMS NO. 212 – 214 – REMOVE OUT OF SERVICE PIPE (FORCE MAIN)

The work consists of furnishing all labor and equipment to remove and dispose of out of service mains. Unless otherwise indicted by the Engineer or his representative, the pipe removed becomes the property of the Contractor. The unit price shall include all costs necessary to remove the pipe (including fittings, valves, reverse deadmen, etc) including pavement cutting, trenching, replacement of base material, dewatering for excavations up to 6-ft deep, sheeting for excavations up to 6-ft deep, bracing, utility crossings, barricades, clearing of the right-of-way, protection of property, backfilling, etc. Restoration will be paid for under separate pay items.

The quantities of pipe removal to be paid for under this Item shall be the length in linear feet (LF) of pipe measured along the centerline of the pipe through valves and fittings actually removed.

PAY ITEM	DESCRIPTION	UNITS
212	Remove Out of Service Pipe 2" or 4" (Force Main)	LF
213	Remove Out of Service Pipe 6" or 8" (Force Main)	LF
214	Remove Out of Service Pipe 10" or 12" (Force Main)	LF

PAY ITEMS NO. 215 – 220 – SLEEVED CONNECTION

The work consists of furnishing all labor, equipment and materials for installing sleeve connections not included in other items. The unit price shall include notification of shutdown to property owners, establishing alignment, moving and aligning old and new pipe, cleaning and cutting old pipe, sterilization, restraint jointing materials, color-coded polyethylene encasement, and all other operations required to make the connection. All connections shall include the cost of the sleeve or coupling, joint restraints and removal & disposal of up to twenty feet of existing main. Valves, pipe, additional joint restraints on existing main and fittings for connections shall be paid for under separate pay items.

The quantities of sleeve connection to be paid for under this item shall be the number each measured in place, completed, tested, and accepted

PAY ITEM	DESCRIPTION	UNITS
215	2" Sleeved Connection	EA
216	4" Sleeved Connection	EA
217	6" Sleeved Connection	EA
218	8" Sleeved Connection	EA
219	10" Sleeved Connection	EA
220	12" Sleeved Connection	EA

PAY ITEMS NO. 221 – 223 – REVERSE DEADMAN

The work covered by this item consists of reverse deadman installation for mains up to 12 inch in diameter. The installation shall include the corresponding size restrained joint as shown in the standard detail. This pay item includes: the furnishing of all materials and for the proper installation of the reverse deadman in strict accordance with the appropriate pipe specifications, excavation, erosion protection and control, backfill, dewatering for excavations up to 6-ft deep, sheeting for excavations up to 6-ft deep, shoring, surface grading, disposal of water, appropriate sized joint restraint, and concrete, all tools, equipment, labor, and materials necessary to install the reverse deadman as shown, specified or required for the proper completion of the work. Concrete shall cure for 72 hours or as determined by concrete mix design before applying force.

The quantities of reverse dead-man construction to be paid under this item shall be each measured in place, inspected, cured, and accepted.

PAY ITEM	DESCRIPTION	UNITS
221	Reverse Deadman for 2" or 4" Pipe	EA
222	Reverse Deadman for 6" or 8" Pipe	EA
223	Reverse Deadman for 10" or 12" Pipe	EA

PAY ITEM NO. 224 – DUCTILE IRON FITTINGS

The work consists of furnishing all labor, equipment and materials for installing ductile iron fittings not included in other items. All fittings shall include and be installed with joint restraints. The unit price includes furnishing and installing all fittings and materials above or below ground along the pipeline alignment; joints, joint restrainers, and jointing materials; bracing, shoring, and sheeting; dewatering, clearing, grubbing, and stripping; trenching, bedding and backfill; constructing the specified protection and adjusting of existing above ground and underground utilities and service connections; disposal of spoil; color coded polyethylene encasement; pressure testing; erosion protection and control, and all other related and necessary materials, work and equipment required to construct a complete, operable pipeline. The cost of furnishing and installing joint restraints shall be included in the unit price for Ductile Iron Fittings.

The quantities of ductile iron fittings to be paid for under this Item shall be the weight of the fitting required as established weight per fitting, including bolts, in tons (2,000 pounds) measured in place, completed, tested, and accepted. The weight of gaskets, jointing materials, etc., shall not be included in the computation of ductile iron fitting tonnage.

PAY ITEMS NO. 225 & 226 – 2” SS 316 AIR RELEASE VALVE ASSEMBLIES

The work consists of installing 2” SS 316 air release assemblies on sanitary sewer force mains. The unit bid price shall include installing the air release assembly, testing, excavation, backfill, bracing, shoring, sheeting for excavations up to 6-ft deep, dewatering for excavations up to 6-ft deep, surface grading, erosion protection and control, furnishing and installing tap saddle, tap, corporation stop, ball corporation, curb stop, automatic air release valve, enclosure, testing, miscellaneous brass nipples and fittings, and incidental items required to install a new assembly

as shown on the standard detail. All assemblies shall include tracer wire access, drainage gravel and miscellaneous nipples and fittings as shown in the standard details, filter fabric, valve identification tags, paint reference stripe on curb, painting of valve cover and meter boxes.

Measurement shall be on an individual basis for each (EA) assembly installed and accepted.

PAY ITEM	DESCRIPTION	UNITS
225	2" SS 316 Air Release Assembly (Underground)	EA
226	2" SS 316 Air Release Assembly (Aboveground)	EA

PAY ITEMS NO. 227 – 232 – RESILIENT WEDGE GATE VALVE

The work consists of furnishing all labor, equipment and materials for installing a valve not included in other items. The unit bid price includes furnishing and installing valves, valve boxes and covers, color coded polyethylene encasement, tracer wire access, filter fabric, valve identification tags, paint reference stripe on curb, painting of valve cover, concrete valve box pad, extension stems, joint restraints, pressure testing, excavation, backfill, dewatering for excavations up to 6-ft deep, sheeting for excavations up to 6-ft deep, shoring, surface grading and incidental construction associated with these items.

The quantities of valves to be paid for under this Item shall be the number each measured in place, completed, tested, and accepted.

PAY ITEM	DESCRIPTION	UNITS
227	2" RWGV (Resilient Wedge Gate Valve) & Box	EA
228	4" RWGV & Box C 515	EA
229	6" RWGV & Box C 515	EA
230	8" RWGV & Box C 515	EA
231	10" RWGV & Box C 515	EA
232	12" RWGV & Box C 515	EA

PAY ITEMS NO. 233 & 234 – ADJUST VALVE BOX TO FINISHED GRADE

The work consists of furnishing all labor, equipment, and materials for the vertical adjustment of an existing valve box and cover to match proposed finish grade. The unit price shall include placement of the valve cover to finish grade as shown on plans or directed by the Engineer.

the quantity of valve box and cover adjustments to be paid for under this item shall be the number each measured in place, on grade, inspected, and accepted.

PAY ITEM	DESCRIPTION	UNITS
233	Adjust Valve Box to Finished Grade (In Pavement)	EA
234	Adjust Valve Box to Finished Grade (Outside of Pavement)	EA

PAY ITEMS NO. 235 – 239 – LINE STOPS

The work consists of furnishing all labor, equipment and materials, including but not limited to dewatering for excavations up to 6-ft deep, excavation, sheeting for excavations up to 6-ft deep, shoring, preliminary measurements of the pipe prior to ordering the saddle, installing concrete cradle and support, line stop tapping sleeve, valve, and performing line stop installation with and for the duration of the new valve installation, pressure testing of tap saddle/sleeve, polyethylene wrap, and valve box for constructing a line stop on an existing sewer main and the adjustment of its valve box to finish grade. If a by-pass line stop installation is required, the by-pass piping will be paid for under line items for piping.

The quantities of Line Stops to be paid for under this Item shall be the number each measured in place, completed, tested, and accepted.

PAY ITEM	DESCRIPTION	UNITS
235	4" Line Stop	EA
236	6" Line Stop	EA
237	8" Line Stop	EA
238	10" Line Stop	EA
239	12" Line Stop	EA

PAY ITEMS NO. 240 – 259 – TAPPLING SLEEVE/SADDLE VALVE & BOX

The work consists of the installation of tapping saddle or sleeve and associated valves. The quantity to be paid for under this item is the number of connections acceptably installed. Cut in tee and valve may be required in some locations due to utility conflicts and will be paid for as equal sized tap. The unit bid price includes all materials and installation from the point of connection to the main line including scheduling and notification of service interruptions, furnishing and installing tapping saddle, color coded polyethylene encasement, valves, taps, fittings, piping, joint restraints, valve boxes and covers, concrete valve box pads, valve extension stems, tracer wire access, valve identification tags, filter fabric, paint reference stripe on curb, painting of valve box cover, excavation, erosion protection and control, backfill, dewatering for excavations up to 6-ft deep, sheeting for excavations up to 6-ft deep, shoring, surface grading, disposal of water, pressure testing and all other related, necessary, and incidental materials, work and equipment required to complete the connection. All joints shall be restrained.

The quantities of valves/taps to be paid for under this Item shall be the number each measured in place, completed, tested, and accepted.

PAY ITEM	DESCRIPTION	UNITS
240	4" x 2" Tapping Saddle Valve & Box	EA
241	4" x 4" Tapping Sleeve Valve & Box	EA
242	6" x 2" Tapping Saddle Valve & Box	EA
243	6" x 4" Tapping Sleeve Valve & Box	EA
244	6" x 6" Tapping Sleeve Valve & Box	EA

245	8" x 2" Tapping Saddle Valve & Box	EA
246	8" x 4" Tapping Sleeve Valve & Box	EA
247	8" x 6" Tapping Sleeve Valve & Box	EA
248	8" x 8" Tapping Sleeve Valve & Box	EA
249	10" x 2" Tapping Saddle Valve & Box	EA
250	10" x 4" Tapping Sleeve Valve & Box	EA
251	10" x 6" Tapping Sleeve Valve & Box	EA
252	10" x 8" Tapping Sleeve Valve & Box	EA
253	10" x 10" Tapping Sleeve Valve & Box	EA
254	12" x 2" Tapping Saddle Valve & Box	EA
255	12" x 4" Tapping Sleeve Valve & Box	EA
256	12" x 6" Tapping Sleeve Valve & Box	EA
257	12" x 8" Tapping Sleeve Valve & Box	EA
258	12" x 10" Tapping Sleeve Valve & Box	EA
259	12" x 12" Tapping Sleeve Valve & Box	EA

PAY ITEMS NO. 260 – 269 – MANHOLES

The work consists of furnishing all labor, equipment, by-pass operations, customer coordination and materials for constructing a sanitary sewer manhole at location shown on plans or as directed by the Engineer. The unit price shall include all costs necessary to construct the manhole including survey layout (based upon property monuments established by others), material, pavement cutting, trenching, replacement of base material, dewatering for excavations up to 6-ft deep, sheeting for excavations up to 6-ft deep, bracing, utility crossings, barricades, clearing of the right-of-way, protection of property, and backfilling. The depth of the manhole will be measured from the top of the cover down to the invert of the outlet sewer pipe. Excavation and well point dewatering for pipeline Manhole installations are separate pay items.

The quantities of manholes to be paid under this item shall be vertical feet of depth measured in place, completed, inspected, and accepted.

PAY ITEM	DESCRIPTION	UNITS
260	4' Dia. - Precast Manhole Standard	VF
261	4' Dia. - Precast Manhole Inside Drop	VF
262	4' Dia. - Precast Manhole Outside Drop	VF
263	5' Dia. - Precast Manhole Standard	VF
264	5' Dia. - Precast Manhole Inside Drop	VF
265	5' Dia. - Precast Manhole Outside Drop	VF
266	5' Dia. - Precast Air Release Manhole	VF
267	6' Dia. - Precast Manhole Standard	VF
268	6' Dia. - Precast Manhole Inside Drop	VF
269	6' Dia. - Precast Manhole Outside Drop	VF

PAY ITEM NO. 270 – REMOVAL OF EXISTING MANHOLE

This work item shall provide all labor, equipment and materials for the removal of existing manholes up to four feet in depth and plugging of existing lines with brick and mortar. The work does not include excavation, surface restoration, sheeting, MOT, or well point dewatering which, if required, will be paid for under other Pay Items.

The quantity to be measured for payment under this Pay Item will be the actual number of manhole removals completed and accepted up to four (4) feet in depth.

PAY ITEM NO. 271 – REMOVAL OF EXISITING MANHOLE ADDITIONAL

The work consists of all work contained in Pay Item Remove Existing Manholes and provides for manhole removal for depths greater than four (4') feet deep.

The quantity to be measured for payment under this Pay Item will be the actual length in vertical feet of additional manhole removal in the work less the four (4) feet paid for under other Pay Items

PAY ITEMS NO. 272 – 279 – INITIAL EXCAVATION

The work consists of furnishing all labor, equipment, materials, traffic control and supervision necessary for the excavation exposing up to 30 linear feet of existing sanitary sewer gravity or forcemain pipe as measured along the pipe in a horizontal plane. The unit price shall contain all costs necessary to expose the pipe, temporary sheeting/shoring/bracing up to 6-ft deep, dewatering, well point dewatering up to 6' deep, crushed stone, stabilization and protection of existing utilities, property protection, backfilling, compaction, and all other related and necessary materials required to expose the pipe to be repaired in accordance with the Contract Documents. There shall be one Initial Excavation per work site unless otherwise approved by the Engineer. The following items, if required or as determined by the Engineer, will be paid for under other Contract Pay Items: pipeline point repair, pipeline offset relocation, select backfill material, well point dewatering, by-pass pumping, surface restoration, sheeting for excavations greater than 6-ft deep, and pavement restoration.

The quantity to be paid for under this item shall be the actual number of each (EA) per job assignment for initial excavation made in conjunction with exploration or pipe repair at the various cut ranges listed. The cut for Initial Excavation shall be the average of the pipe cut (grade elevation minus the pipe invert elevation) measured at each end of the trench, which measures 30 feet in length or less in conjunction of pipeline point repair or relocation offset.

PAY ITEM	DESCRIPTION	UNITS
272	Initial Excavation - 0'-6' Deep	EA
273	Initial Excavation - 6'-8' Deep	EA
274	Initial Excavation - 8'-10' Deep	EA
275	Initial Excavation - 10'-12' Deep	EA
276	Initial Excavation - 12'-14' Deep	EA
277	Initial Excavation - 14'-16' Deep	EA
278	Initial Excavation - 16'-18' Deep	EA
279	Initial Excavation - 18'-20' Deep	EA

PAY ITEMS NO. 280 – 287 – ADDITIONAL EXCAVATION

The work consists of furnishing all labor, equipment, materials, traffic control and supervision necessary for the excavation to expose existing pipe as measured in the horizontal plane in excess of the original 30 linear feet included in Initial Excavation pay item. This Pay Item is applicable only in conjunction with, and includes the same work as listed in Pay Items 271-278.

Measurement of payment shall be the actual number of linear feet (LF) per job assignment for additional excavations made in conjunction with exploration of pipeline point repair or relocation offset.

PAY ITEM	DESCRIPTION	UNITS
280	Additional Excavation - 0'-6' Deep	LF
281	Additional Excavation - 6'-8' Deep	LF
282	Additional Excavation - 8'-10' Deep	LF
283	Additional Excavation - 10'-12' Deep	LF
284	Additional Excavation - 12'-14' Deep	LF
285	Additional Excavation - 14'-16' Deep	LF
286	Additional Excavation - 16'-18' Deep	LF
287	Additional Excavation - 18'-20' Deep	LF

PAY ITEMS NO. 288 – 295 – BYPASS PUMPING SETUP & OPERATION

This item provides for set up and operation of by-pass sewage pumping equipment and temporary piping as required and as described in the Standard Technical Specifications. This Pay Item is applicable on projects or repairs that have high flow or require an over night by pass operation.

The quantity to be measured for payment under this Pay Item will be the actual number of by-pass pumping set ups and operations, per part of day, required by the Engineer in the work. The minimum measurement for this pay item is eight (8) hours or 0.333 days and is measured from the time that the sewage is actually by-passed. This eight (8) hour minimum (0.333 days) includes full compensation for set up and operation for up to the first eight (8) hour period. Additional time will be in tenths of the day or twenty-four (24) hour period. The quantities determined shall be paid per day (DAY) or portion of day of by-pass pumping set up and operation.

PAY ITEM	DESCRIPTION	UNITS
288	Wastewater Bypass Pumping, Set up, 6" - 10" diameter	EA
289	Wastewater Bypass Pumping, Set up, 12" - 14" diameter	EA
290	Wastewater Bypass Pumping, Set up, 15" - 21" diameter	EA
291	Wastewater Bypass Pumping, Set up, 24" diameter	EA
292	Wastewater Bypass Pumping, Operation, 6" - 10" diameter	DAY

293	Wastewater Bypass Pumping, Operation, 12" - 14" diameter	DAY
294	Wastewater Bypass Pumping, Operation, 15" - 21" diameter	DAY
295	Wastewater Bypass Pumping, Operation, 24" diameter	DAY

PAY ITEMS NO. 296 – 311 – GRAVITY SEWER POINT REPAIR

This item provides all labor, equipment and materials for the replacement of up to twenty (20) linear feet of gravity sewer pipe with PVC or Ductile Iron pipe (Material as directed by the Engineer at each occurrence). The existing sewer pipe may be Vitrified Clay, PVC, Ductile Iron, Cast Iron, or Concrete gravity sewer main. The work includes repair sleeves, cutting existing pipe, pipe bedding, new replacement pipe, disposal of existing pipe, and reconnection of lateral connections to sewer main. This item also includes maintaining of flow in low flow systems that can be accomplished with up to a four (4) inch mud hog, diaphragm or centrifugal type pump and lay flat hose or temporarily blocking the sewer for a period of time to facilitate the repair. The cost of lengths of pipe greater than twenty (20) linear feet will be paid for under Pay Items 209-324. The work does not include sheeting or well point dewatering which, if required, will be paid for, or is part of the work, under other Pay Items.

The quantity to be paid under this item will be in accordance with each (EA) pipe size to be repaired as noted in the contract pay items.

PAY ITEM	DESCRIPTION	UNITS
296	6" Dia. Pipe Gravity Sewer Point Repair (DI Replacement Pipe)	EA
297	6" Dia. Pipe Gravity Sewer Point Repair (PVC Replacement Pipe)	EA
298	8" Dia. Pipe Gravity Sewer Point Repair (DI Replacement Pipe)	EA
299	8" Dia. Pipe Gravity Sewer Point Repair (PVC Replacement Pipe)	EA
300	10" Dia. Pipe Gravity Sewer Point Repair (DI Replacement Pipe)	EA
301	10" Dia. Pipe Gravity Sewer Point Repair (PVC Replacement Pipe)	EA
302	12" Dia. Pipe Gravity Sewer Point Repair (DI Replacement Pipe)	EA
303	12" Dia. Pipe Gravity Sewer Point Repair (PVC Replacement Pipe)	EA
304	15"/16" Dia. Pipe Gravity Sewer Point Repair (DI Replacement Pipe)	EA
305	15"/16" Dia. Pipe Gravity Sewer Point Repair (PVC Replacement Pipe)	EA
306	18" Dia. Pipe Gravity Sewer Point Repair (DI Replacement Pipe)	EA

307	18" Dia. Pipe Gravity Sewer Point Repair (PVC Replacement Pipe)	EA
308	21" Dia. Pipe Gravity Sewer Point Repair (DI Replacement Pipe)	EA
309	21" Dia. Pipe Gravity Sewer Point Repair (PVC Replacement Pipe)	EA
310	24" Dia. Pipe Gravity Sewer Point Repair (DI Replacement Pipe)	EA
311	24" Dia. Pipe Gravity Sewer Point Repair (PVC Replacement Pipe)	EA

PAY ITEMS NO. 312 – 327 – GRAVITY SEWER POINT REPAIR – ADDITIONAL LENGTH

This item provides all labor, equipment and materials for the additional length of replacement gravity sewer pipe with PVC or Ductile Iron pipe (Material as directed by the Engineer at each occurrence). This Pay Item provides for an additional thirty (30) feet of replacement pipe. This Pay Item is used only in conjunction with Pay Items 295-310 and contains the same work therein described. Pipe point repairs requiring greater than fifty (50) feet of pipe will be constructed under separate Contract Pay Items.

The quantity to be paid under this item will be in accordance with the linear feet (LF) installed above twenty (20) linear for each pipe size to be repaired as noted in the contract pay items.

PAY ITEM	DESCRIPTION	UNITS
312	6" Dia. Pipe Gravity Sewer Point Repair - Additional Length (DI Replacement Pipe)	LF
313	6" Dia. Pipe Gravity Sewer Point Repair - Additional Length (PVC Replacement Pipe)	LF
314	8" Dia. Pipe Gravity Sewer Point Repair - Additional Length (DI Replacement Pipe)	LF
315	8" Dia. Pipe Gravity Sewer Point Repair - Additional Length (PVC Replacement Pipe)	LF
316	10" Dia. Pipe Gravity Sewer Point Repair - Additional Length (DI Replacement Pipe)	LF
317	10" Dia. Pipe Gravity Sewer Point Repair - Additional Length (PVC Replacement Pipe)	LF
318	12" Dia. Pipe Gravity Sewer Point Repair - Additional Length (DI Replacement Pipe)	LF
319	12" Dia. Pipe Gravity Sewer Point Repair - Additional Length (PVC Replacement Pipe)	LF

320	15"/16" Dia. Pipe Gravity Sewer Point Repair - Additional Length (DI Replacement Pipe)	LF
321	15"/16" Dia. Pipe Gravity Sewer Point Repair - Additional Length (PVC Replacement Pipe)	LF
322	18" Dia. Pipe Gravity Sewer Point Repair - Additional Length (DI Replacement Pipe)	LF
323	18" Dia. Pipe Gravity Sewer Point Repair - Additional Length (PVC Replacement Pipe)	LF
324	21" Dia. Pipe Gravity Sewer Point Repair - Additional Length (DI Replacement Pipe)	LF
325	21" Dia. Pipe Gravity Sewer Point Repair - Additional Length (PVC Replacement Pipe)	LF
326	24" Dia. Pipe Gravity Sewer Point Repair - Additional Length (DI Replacement Pipe)	LF
327	24" Dia. Pipe Gravity Sewer Point Repair - Additional Length (PVC Replacement Pipe)	LF

PAY ITEMS NO. 328 – 333 – FORCE MAIN POINT REPAIR

This item provides all labor, equipment and materials for the replacement of up to ten (10) linear feet of pipe and may be used for routine response and emergency repairs at the discretion of the Engineer or his representative. The pipe being repaired may be PVC, HDPE, Ductile Iron, or Cast Iron. All ductile iron pipe shall have polyethylene encasement. The work includes furnishing and installing two full seal clamps, bell joint seal clamps or two solid sleeves, cutting existing pipe, pipe bedding, dewatering for excavations up to 6-ft deep, sheeting for excavations up to 6-ft deep, and disposal of existing pipe. Additional pipe materials over ten (10) linear feet in length will be paid for under Pay Items 191-201. Excavations and well point dewatering for pipeline point repairs are separate pay items.

The quantity to be paid under this item will be in accordance with each (EA) pipe size to be repaired as noted in the contract pay items.

PAY ITEM	DESCRIPTION	UNITS
328	2" Dia. Pipe Forcemain Point Repair	EA
329	4" Dia. Pipe Forcemain Point Repair	EA
330	6" Dia. Pipe Forcemain Point Repair	EA
331	8" Dia. Pipe Forcemain Point Repair	EA
332	10" Dia. Pipe Forcemain Point Repair	EA

333	12" Dia. Pipe Forcemain Point Repair	EA

PAY ITEMS NO. 334 & 335 – REPLACE MANHOLE RING AND COVER

This pay includes replacement of existing manhole rings and covers in roadway paved areas, or other areas, as directed by the Engineer. The work includes all labor, equipment and material for replacement of manhole rings and covers. The work does not include excavation or surface restoration which, if required, will be paid for, or is part of the work, under other Contract Pay Items.

The quantity to be measured for payment under this Pay Item will be the actual number each of manhole ring and covers replaced completed and accepted.

PAY ITEM	DESCRIPTION	UNITS
334	Replace Manhole Ring & Cover (Asphalt Pavement)	EA
335	Replace Manhole Ring & Cover (Unpaved)	EA

PAY ITEMS NO. 336 – 338 – MANOLE BENCH REPLACEMENT

This pay item includes the replacement of manhole benches and invert channels. The work includes all labor, equipment and material for rebuilding existing manhole inverts and benches as described in the Technical Specifications.

The quantity of manhole bench replacement to be measured for payment under this Pay Item will be the actual number each (EA) of manholes that have manhole inverts and benches rebuilt.

PAY ITEM	DESCRIPTION	UNITS
336	Manhole Bench Replacement, 4' Diameter	EA
337	Manhole Bench Replacement, 5' Diameter	EA
338	Manhole Bench Replacement, 6' Diameter	EA

PAY ITEMS NO. 339 & 340 – ADJUST MANHOLE RING AND COVER TO FINISHED GRADE

This item provides all labor, equipment and materials for adjusting existing manhole risers, frames, and covers. Adjustment includes removal of existing ring and cover and removal or placement of up to 6 courses of brick and reinstalling the existing ring and cover. The work does not include excavation, surface restoration, sheeting or well point dewatering which, if required, will be paid for, or is part of the work, under other Pay Items.

The quantities of manhole rim and cover adjustments to be paid under this item shall be each measured in place, on grade, inspected, and accepted.

PAY ITEM	DESCRIPTION	UNITS
339	Adjust Manhole Ring & Cover to Finished Grade (In Pavement)	EA

340	Adjust Manhole Ring & Cover to Finished Grade (Outside of Pavement)	EA

PAY ITEM NO. 341– FLOWABLE CONCRETE FILL

This item provides all labor, equipment, and materials for placing flowable fill per the Technical Specifications. The quantity of Flowable Concrete Fill to be paid under this item shall be per cubic yard measured in place, inspected, and accepted.

PAY ITEMS NO. 342 – 346 - PAVEMENT REPAIR AND ROAD RESTORATION

This item provides all labor, equipment, and materials for the installation of roadway base and surface course per the Technical Specifications and Contract Drawings. Replacement base material shall be the same as the existing base. Measurement will be based on the actual number of cubic yards of Roadway Base and tons of Superpave Asphalt base and concrete installed, tested, completed, and approved. The weight of the Superpave asphalt base and concrete shall be determined from batch weights, truck scale weights or other methods approved by the Engineer. Delivery tickets, in duplicate, signed by a sworn weigher, must accompany each load of material to the project site. One copy of the delivery ticket must be retained by the Contractor and one copy must be delivered to the City Inspector. The total number of tons reflected in one set of all delivery tickets collected by the Inspector must be the measured pay quantity.

PAY ITEM	DESCRIPTION	UNITS
342	Roadway Base, Lime Rock, Primed, Min. LBR 100, Variable Thickness	CY
343	Roadway Base, Crushed Concrete/Graded Aggregate, Min. LBR 100, Variable Thickness	CY
344	Superpave Asphalt Base, Type B 12.5, Variable Thickness	TN
345	Superpave Asphalt Concrete, Type SP 9.5, Fine, Traffic Level C, Variable Thickness	TN
346	Superpave Asphalt Concrete, Type SP 12.5, Fine, Traffic Level C, Variable Thickness	TN

PAY ITEMS NO. 347 - 349 – DRIVEWAY RESTORATION

Payment for all work included under this Pay Item will be made at the Contract unit price bid per square yard of driveway installed as shown in the Contract Drawings and as listed on the Bid Form. Measurement will be based on the actual number of square yards of driveway installed, tested, completed and approved. Payment shall represent full compensation for all labor, materials and equipment for cutting the edges of existing driveways, compacting subgrade, furnishing and installing the shell, asphaltic concrete, concrete, or decorative block and all incidentals necessary to complete the driveway restoration as shown on the Contract Drawings and included in the Specifications. No payment for restoration of a private driveway outside the right-of-way shall be made under this Pay Item.

PAY ITEM	DESCRIPTION	UNITS
347	Pavement, Cement Concrete, 6" Min Thickness (Driveways)	SY
348	Pavement, Cement Concrete, 8" Thick	SY
349	Driveway Restoration, In Kind, Decorative Block	SY

PAY ITEMS NO 350 - 352 – MILLING OF EXISTING ASPHALT

Payment for all work included under this Pay Item will be made at the Contract unit price bid per square yard of asphalt milling within the Contract Drawings and as listed on the Bid Form. Measurement will be based on the actual number of square yards of milling installed, tested, completed and approved. The measurement will be from face of curb to face of curb or as specified, but not greater than the width of the existing roadway prior to construction. Payment will include the milling of the asphaltic concrete in accordance with these Specifications. No payment for milling of a private driveway within or outside the right-of-way shall be made under this Pay Item.

PAY ITEM	DESCRIPTION	UNITS
350	Milling Existing Asphalt Pavement, 1/2" Average Depth	SY
351	Milling Existing Asphalt Pavement, 3/4" Average Depth	SY
352	Milling Existing Asphalt Pavement, 1" Average Depth	SY

PAY ITEMS NO. 353 – 356 – CURB AND GUTTER REPLACEMENT

Payment for all work included in this Pay Item will be made at the applicable Contract unit price bid per linear foot for removal of existing curbing and for furnishing and placing FDOT Type D or F curb and gutter, Miami curb, or Valley gutter as shown on the Contract Drawings and listed on the Bid Form. Measurement will be per actual number of linear feet of curbing installed. Payment shall represent full compensation for removal of existing curb and all labor, material and equipment for compacting subgrade, forming, furnishing, placing the concrete, and finishing as specified and all incidentals necessary for completion of this Pay Item, in accordance with FDOT specifications.

PAY ITEM	DESCRIPTION	UNITS
353	Curb & Gutter, Concrete, FDOT Type D	LF
354	Curb & Gutter Concrete, FDOT Type F	LF
355	Curb & Gutter, Concrete, Miami Curb	LF
356	Valley Gutter, Concrete, PCED Index 1315	LF

PAY ITEMS NO. 357 & 358 – CONCRETE SIDEWALKS

Payment for all work included under this Pay Item will be made at the Contract unit price bid per square foot of concrete sidewalk installed as shown in the Contract Drawings and as listed on the

Bid Form. Measurement of sidewalk restoration will be per the actual number of square feet of sidewalk replaced. Payment shall represent full compensation for all labor, materials and equipment for cutting the edges of existing concrete, compacting subgrade, furnishing and installing the concrete and all incidentals necessary to complete the sidewalk restoration as shown on the Contract Drawings in accordance with FDOT Specifications where applicable.

PAY ITEM	DESCRIPTION	UNITS
357	Sidewalk, Concrete, 4" Min. Thickness, Remove and Replace	SF
358	Sidewalk, Concrete, 6" Min. Thickness, Remove and Replace	SF

PAY ITEM NO. 359 – SODDING

Payment for all work included under this Pay Item will be made at the Contract unit price bid per square yard of sod installed as shown in the Contract Drawings and as listed on the Bid Form. Measurement of sodding will be per the actual number of square yards of sod installed. Payment shall represent full compensation for all labor, materials and equipment for furnishing and installing the sod and all incidentals necessary to complete the work as shown on the Contract Drawings in accordance with FDOT Specifications where applicable.

END OF SECTION

THIS PAGE INTENTIONALLY LEFT BLANK

SECTION 3 - SUBMITTALS

3.01 GENERAL

When used in the Contract Documents, the term "Shop Drawings" shall be considered to mean Contractor's plans for material and equipment which become an integral part of the Project. These drawings shall be complete and detailed. Shop Drawings shall consist of fabrication, drawings, setting drawings, schedule drawings, manufacturer's scale drawings and wiring and control diagrams. Cuts, catalogs, pamphlets, descriptive literature and performance and test data, shall be considered only as supportive to required Shop Drawings as defined above.

Data on materials and equipment shall include, without limitation, materials and equipment lists, catalog sheets, cuts, performance curves, diagrams, materials of construction and similar descriptive material. Materials and equipment lists shall give, for each item thereon, the name and location of the supplier or manufacturer, trade name, catalog reference, size, finish and all other pertinent data. Submittal distribution will be by electronic submittal as coordinated during the Preconstruction Conference.

3.02 CONTRACTOR RESPONSIBILITIES

The Contractor shall submit to the City and Engineer for review and acceptance: working drawings, shop drawings, test reports and data on materials and equipment, and material samples (hereinafter in this section called samples) as are required for the proper control of work, including, but not limited to those working drawings, shop drawings, data and samples for materials and equipment specified elsewhere in the Specifications and in the Contract Drawings.

Drawings and schedules shall be checked and coordinated with the work of all trades involved before they are submitted for review by the City and the Engineer and shall bear the Contractor's stamp of approval and original signature as evidence of such checking and coordination. Drawings or schedules submitted without this stamp of approval and original signature shall be returned to the Contractor for resubmission.

If drawings show variations from Contract requirements because of standard shop practice or for other reasons, the Contractor shall describe such variations in his letter of transmittal. If acceptable, proper adjustment in the contract shall be implemented where appropriate. If the Contractor fails to describe such variations, he shall not be relieved of the responsibility of executing the work in accordance with the Contract, even though such drawings have been reviewed.

For all mechanical and electrical equipment furnished, the Contractor shall provide a list including the equipment name and address and telephone number of the manufacturer's representative and service company so that service and/or spare parts can be readily obtained.

All manufacturers or equipment suppliers who proposed to furnish equipment or products shall submit an installation list to the City along with the required shop drawings. The installation list shall include at least five installations where identical equipment has been installed and have been in operation for a period of at least one (1) year.

No materials or equipment shall be ordered, fabricated or shipped or any work performed until the Engineer reviews and returns to the Contractor the submittals as acceptable according to the

submittal review codes in Section 3.04.

3.03 SUBMITTAL NUMBERING

When submitting shop drawings or samples, utilize a unique numbering system of the Contractors choice. Subsequent resubmittals of a revised submittal shall be denoted with a letter, A-Z, indicating the resubmission of the same drawing (i.e. A=2nd submission, B=3rd submission, C=4th submission, etc.).
An example of a submittal numbering would be as follows: Submittal No. 5A - HDPE Pipe 6.03

1. 5A is the second submission of the 5th shop drawing submitted for the project
2. HDPE Pipe is the subject of the submittal
3. 6.05 is the Specification Section for HDPE Pressure Pipe

3.04 SUBMITTAL REVIEW

Submittals shall be transmitted in sufficient time to allow the Engineer at least twenty (20) working days for review and processing. The review of shop drawings, data and samples will be for general conformance with the design concept and Contract Documents. An acceptance of a submittal shall be interpreted to mean that the Engineer has no specific objections to the submitted material, subject to conformance with the Contract Drawings and Specifications. This is not to be construed as permitting any departure from the Contract requirements, relieving the Contractor of responsibility for any errors, including details, dimensions, and materials, or approving departures from details furnished by the City, except as otherwise provided herein.

Submittals will be returned to the Contractor under one (1) of the following codes:

A. "NO EXCEPTIONS TAKEN" is assigned when there are no notations or comments on the submittal. When returned under this code the Contractor may release the equipment and/or material for manufacture.
B. "CORRECTIONS NOTED". This code is assigned when a confirmation of the notations and comments IS NOT required by the Contractor. The Contractor may release the equipment or material for manufacture; however, all notations and comments must be incorporated into the final product.
C. "REVISE AND RESUBMIT". This code is assigned when notations and comments are extensive enough to require a resubmittal of the package. The Contractor may release the equipment or material for manufacture; however, all notations and comments must be incorporated into the final product. This resubmittal is to address all comments, omissions and non-conforming items that were noted. Resubmittal is to be received by the Engineer within 15 Calendar Days of the date of the Engineer's transmittal requiring the resubmittal.
D. “REJECTED" is assigned when the submittal does not meet the intent of the Contract Documents. The Contractor must resubmit the entire package revised to bring the submittal into conformance. It may be necessary to resubmit using a different manufacturer/vendor to meet the Contract Documents.
E. “Filed as Received” is assigned when the submittal is for informational purposes only. No review or comments will be provided by the Engineer.

END OF SECTION

SECTION 4 – AS-BUILT DRAWINGS

4.01 MINIMUM AS-BUILT DRAWING STANDARDS FOR ALL AS-BUILT DRAWINGS

For all elements of construction, As-Built Drawings shall be submitted to at least the level of detail in the contract documents. It is anticipated that the original contract documents shall serve as at least a background for all record information. Original drawings in CAD format may be requested by the City.

Project data points shall contain both horizontal and vertical data relative to the FL Florida State Plane, West Zone, US Foot. Vertical datum is NAVD 1988. All elevations shall be in feet and tenths, referenced to NAVD 1988. Each sheet of the As-Built Drawings shall have the title “AS-BUILT DRAWING” printed in large bold lettering near the title block and a date corresponding to the date the as-built drawing was issued. As-Built Drawings notes, and information shall be bold or italics to identify them as As-Built information.

4.02 AS-BUILT DRAWINGS PREPARATION

The As-Built Drawings shall show the name, address, and phone number of the Contractor. Each drawing shall be certified by a responsible representative of the Contractor and dated. As-built information shall be recorded currently with construction progress and work shall not be concealed until required information is recorded. Properly prepared As-Built Drawings shall be certified by a Professional Engineer or Surveyor registered to the state of Florida, employed by the Contractor.

The As-Built Drawings shall at a minimum legibly include the following:

A. All underground piping with elevations and dimensions. Changes to piping location. Horizontal and vertical locations of underground utilities and appurtenances referenced to permanent surface improvements. Actual installed pipe material, size, class, etc.

B. Locations of drainage ditches, swales, water lines and force mains shall be shown every 200 feet (measured along the centerline). Dimensions at these locations shall indicate distance from centerline of right-of-way to the facility.

C. All horizontal locations, if not in the right-of-way, must relate to easement.

D. Field changes of dimension and detail.

E. Changes made by Field Order or by Change Order.

F. Details not on original Contract Drawings.

G. Equipment and piping relocations.

H. Locations of all valves, air release valves, fire hydrants, manholes, water and sewer services, water and force main fittings, underdrain cleanouts, catch basins, junction boxes

and any other structures located in the right-of-way or easement, shall be located by elevation and by station and offset based on intersection P.I.'s and centerline of right-of-way. For facilities located on private roads, the dimensioning shall be from centerline of paving or another readily visible baseline.

I. Elevations shall be provided for all manhole rim and inverts; junction box rim and inverts; catch basin rim and inverts; and baffle, weir and invert elevations in control structures. Elevations shall also be provided at the PVI's and at every other lot line or 200 feet, whichever is less, of drainage swales and ditches. Benchmarks and elevation datum shall be indicated.

J. Slopes for pipes and ditches shall be recalculated, based on actual field measured distances, elevations, pipe sizes, and type shown. Cross section of drainage ditches and swales shall be verified.

K. Centerline of roads shall be tied to right-of-way lines. Elevation of roadway centerline shall be given at PVI's and at all intersections.

L. As-Built Drawings shall show bearings and distances for all right-of-way and easement lines, and property corners.

M. Sidewalks, fences, and walls, if installed at the time of initial as-built drawing submittal, shall be located every 200 feet or alternate lot lines, whichever is closer. Dimensions shall include distance from the right-of-way line and the back of curb and lot line or easement line.

N. Allowable tolerance shall be ± 6.0 inches for horizontal dimensions. Vertical dimensions such as the difference in elevations between manhole inverts shall have an allowable tolerance of ± 1/8 inch per 50 feet (or part thereof) of horizontal distance up to a maximum tolerance of ± 2 inch.

Specifications and Addenda shall be legibly marked to record manufacturer, trade name, catalog number and supplier of each product and item of equipment actually installed and changes made by Field Order or by Change Order.

4.02.01 REQUIREMENTS FOR RECLAIMED WATER MAINS AND FORCE MAINS

In addition to that specified above, the following information shall be provided on the As-Built Drawings.

A. Location (vertical and any horizontal) at intervals not to exceed two hundred (200) feet and at all locations where the direction changes by more than ten (10) degrees.

B. Pipe size, material, and dimension ratio.

C. Location of air release valve.

D. Detailed location of valves (horizonal).

E. Elevations shall be provided on the top of operating nuts for all water and force main valves.

F. Reclaimed water service connection location based on distance from main line and property line for each designed meter.

G. Horizontal Directional Drilling (HDD) locations and elevations shall be shown on the As-Built Drawings. The beginning, ending, and surface locations shall be indicated as well as the horizontal and vertical location at least every 25 linear feet along the pipe as provided in the HDD Contractor's certified report and bore log.

All top of pipe elevations shall be accompanied by a finished grade elevation at the same location. Horizontal location of the pipe shall be defined using ties to back of curb and nearest property corner, property line or permanent control point.

4.02.02 REQUIREMENTS FOR GRAVITY SEWER

In addition to that specified above, the following information shall be provided on the As-Built Drawings.

A. Manhole rim and invert elevations (include pipe inverts).

B. Manhole horizontal location (i.e. dimension from right-of-way line or permanent control point.)

C. Service laterals located from the nearest downstream manhole. These dimensions shall be provided by on-site inspections or televising of the sewer following installation.

D. Distance between manholes.

Size and material of all pipe.

4.02.03 REQUIREMENTS FOR WASTEWATER PUMP/LIFT STATIONS

In addition to that specified above, the following information shall be provided on the As-Built Drawings.

A. Location ties back to back of curb and nearest property corner or permanent control point.

B. Wet well invert elevations.

C. Pipe invert elevations.

D. Valve vault inverts.

E. Top of slab elevations.

F. Pump make and model, horsepower, impellor size, design point.

G. Operating set point elevations

4.03 AS-BUILT DRAWINGS SUBMITTAL

Prior to substantial completion and prior to starting the bacteria testing of water lines, Contractor shall deliver electronic As-Built Documents and As-Built Drawings to the City and the Engineer for review. If there are any required changes or additions, these shall be completed and resubmitted for review. Signed and sealed As-Built Documents and As-Built Drawings shall be submitted prior to final pay application to the City and the Engineer, both electronically and in hard copy paper format. Up to six (6) copies shall be provided at the City's request.

The Contractor shall employ a Professional Engineer or Surveyor registered in the State of Florida to verify survey data and properly prepare As-Built Drawings. As-Built Drawings shall be certified by the professional(s) (Engineer or Surveyor licensed in Florida), as stipulated by the Land Development Ordinance and submitted in electronic format and up to six (6) hardcopies signed and sealed by a Florida registered surveyor and mapper.

AutoCAD drawings shall be in DWG or DXF form. All fonts, line types, shape files, external references, or other pertinent information used in the drawing and not normally included in AutoCAD shall be included on the media with a text file or attached noted as to its relevance and use.

Accompany submittal with transmittal letter, containing:

A. Date.
B. Project title.
C. Contractor's name and address.
D. Title and number of each As-Built Document.
E. Signature of Contractor or his authorized representative.

Note: The data required to properly prepare these As-Built Drawings shall be obtained at the site, at no cost to the City by the responsible design professional or his/her duly appointed representative. The appointed representative shall be a qualified employee of the responsible design professional or a qualified inspector retained by the responsible design professional on a project-by-project basis.

END OF SECTION

SECTION 5 - CONCRETE, MASONRY, AND REINFORCING STEEL

5.01 GENERAL

The Work in this section includes furnishing, placing, finishing, and curing all reinforced and plain concrete, prestressed concrete, reinforcing steel, welded wire fabric, brick, masonry block, mortar, and related work. Brick used for paving and hexagon block used for sidewalks are not included in this section.

5.02 PORTLAND CEMENT CONCRETE

Portland cement concrete shall conform to the applicable requirements of the FDOT-SSRBC Sections 346, 347, and 921.

Class IV concrete shall be used for all concrete in contact with, or over, salt or brackish water.

Concrete used for structures in contact with sewage shall be mixed from Type II Portland cement containing the lowest calcium thiosulfate available as specified in AASHTO M 85.

Concrete shall meet the following minimum 28-day compressive strength:

Miscellaneous concrete (thrust blocks, pipe encasement, etc.)	2,500 psi
Concrete curb/gutter/sidewalk/pavement	3,000 psi
Cast-in-place/precast structures	4,000 psi
Prestressed structures	5,000 psi

5.03 REINFORCING STEEL

Reinforcing steel shall conform to ASTM A 615, Grade 60 deformed bars and to the applicable requirements of FDOT-SSRBC Sections 415 and 931.

Reinforcing steel shall not be coated, except as specifically specified on the Contract Drawings.

All welded wire fabric shall conform to ASTM A 497 (deformed) or ASTM A 185 (plain) and to the applicable requirements of FDOT-SSRBC Article 415-6.

5.04 FIBROUS CONCRETE REINFORCEMENT

Fibrous concrete reinforcement may be used, where shown or approved, in lieu of welded wire fabric for shrinkage and thermal contraction/expansion in concrete pavement, driveway, and sidewalk.

Fibrous concrete reinforcement shall conform to ASTM C 1116, ASTM C 94, and ASTM E 119-83.

Fibrous concrete reinforcement shall be 100 percent virgin polypropylene fibrillated material mixed with concrete at a minimum of 1.5 pounds per cubic yard of concrete.

5.05 PLACEMENT OF REINFORCEMENT

Reinforcing steel placement shall conform to the applicable requirements of FDOT-SSRBC Articles 350-7 and 415-5.

The following minimum concrete cover shall be provided for all reinforcement:

Concrete cast against and permanently exposed to earth	3-inch
Concrete exposed to earth or weather	
Primary reinforcement	2-inch
Stirrups, ties, and spirals	1 1/2-inch
Concrete deck slabs, top and bottom	2-inch
Concrete not exposed to earth or weather	
Primary reinforcement	1 1/2-inch
Stirrups, ties, and spirals	1-inch

For bundled bars, the minimum concrete cover shall be equal to the equivalent diameter of the bundle, but need not be greater than 2-inch, except against and permanently exposed to earth, in which case the minimum cover shall be 3-inch.

Minimum concrete cover shall be increased in corrosive environment areas.

5.06 PLACEMENT OF CONCRETE

Placement of Portland cement concrete shall conform to the applicable requirements of FDOT-SSRBC Article 400-7.

Unless specific permission is granted prior to each occurrence, no concrete shall be delivered to the job site before 7:30 a.m. or after 4:30 p.m. No concrete shall be placed until the reinforcing steel placement has been inspected and approved by the Engineer.

5.07 CURING OF CONCRETE

Curing of Portland cement concrete shall conform to the applicable requirements of FDOT-SSRBC Article 520-8.

5.08 FINISHING OF CONCRETE

Finishing of Portland cement concrete shall conform to the applicable requirements of FDOT-SSRBC Article 400-15.

5.09 CONCRETE BRICK

Concrete brick for use in drainage structures and where shown on the Contract Drawings shall be approximately 3 5/8-inch by 7 5/8-inch by 2 1/4-inch in size and shall conform to ASTM C 55, Grade N-II or S-II.

5.10 CLAY BRICK

Brick shall be sound, hard, and uniformly burned regular and uniform in shape and size or compact texture and conforming to ASTM C 32, "Specification for Sewer and Manhole Brick (Made from Clay or Shale) Grade MS or MM."

5.11 MASONRY BLOCK

Load bearing units shall be hollow or solid, as shown on the Contract Drawings, and shall conform to ASTM C 90, Type I, 8-inch by 16-inch or 4-inch by 16-inch nominal face dimension.

Non-load bearing units shall conform to ASTM C 129, Type I, 8-inch by 16-inch or 4-inch by 16-inch nominal face dimension.

Horizontal continuous joint reinforcement shall be provided at every other joint. Reinforcement shall be a minimum of #9 gage steel, Grade 50. Wire shall be hot-dip galvanized, conforming to ASTM A 153, Class B-2 (1.5 ounce per square foot of wire surface) for zinc coating after prefabrication into units. Mortar coverage shall be not less than 5/8-inch on joint faces exposed to exterior, and not less than 1/2-inch elsewhere.

5.12 MORTAR

Mortar shall consist of a mixture of cementitious materials, aggregate, and water. All proportions shall be by volume and/or weight. Masonry cement shall conform to ASTM C 91 and C 270. Fine aggregate and Portland cement shall conform to the applicable requirements of FDOT-SSRBC Sections 902 and 921 respectively. Mortar shall have a minimum compressive strength of 1,500 psi.

5.13 GROUT

Grout shall be identical to mortar in all respects.

END OF SECTION

THIS PAGE INTENTIONALLY LEFT BLANK

SECTION 6 – EXCAVATION AND BACKFILL

6.01 GENERAL

The Work in this section includes furnishing all labor, materials, tools, and equipment for excavation and backfill of roadways, sidewalks, curbs, driveways, pipelines, and structures. The Work also includes removing and disposing of leftover material and furnishing and placing off-site fill.

Bidders shall examine the site of the Work, make their own additional soil borings and tests, and make their own determination of the character of materials and the conditions to be encountered on the Work; their Bid shall be based upon their own investigation.

6.02 TRENCH SAFETY

The Contractor shall be responsible for maintaining safety at each excavation. The Contractor shall adhere to the Florida Trench Safety Act (FS 90-96), OSHA trench excavation safety standards (29 CFR, Subpart P, 1926.650), and OSHA trench excavation shielding, sloping, or sheeting requirements. Inspections required by OSHA trench excavation safety standards shall be provided by the Contractor's "competent person," as defined by OSHA 29 CF, Subpart P, 1926. The Contractor's "competent person" shall be identified at the Preconstruction Conference.

The Contractor certifies by submitting the bid and subsequently executing this Contract, that all trench excavation done within his control shall be accomplished in strict adherence with OSHA trench safety standards, the Florida Trench Safety Act, and public safety.

The Contractor also agrees to produce or obtain, prior to award of the subcontracts, identical certification from subcontractors who will perform trench excavation, and to retain such certification for at least 3 years following Final Acceptance.

The Contractor shall consider all available geotechnical information when designing the trench excavation safety system. If sufficient geotechnical information is not available, the Contractor may obtain such to support the requirements set forth above, at no additional cost to the City.

6.03 WORK IN WETLANDS, MANGROVES, AND PRESERVATION AREAS

Strict adherence to all permits is required. Damage to wetlands, periodically wet areas, mangroves, and preservation areas is prohibited. Any such damage by the Contractor shall be duly rectified at no additional cost to the City and as approved by the regulatory agencies.

6.04 CLEARING AND GRUBBING

All clearing and grubbing Work shall conform to all applicable requirements of FDOT-SSRBC Section 110 "Clearing and Grubbing" except as modified herein.

The Contractor shall remove only those trees and bushes necessary to complete the specified Work. Not all the trees and bushes have been located or shown on the Contract Drawings. The Contractor shall flag those trees and bushes to be removed. All other trees and bushes shall be protected per Specifications.

All roots, stumps, and other debris shall be removed to a depth not less than 12 inches below a bearing surface. The disturbed surface shall be backfilled, graded, and compacted as specified.

No tree or bush shall be removed without the review and acceptance of the Engineer. The Contractor shall obtain all necessary City or County permits for each tree to be removed. Tree removal shall conform to the provisions of the Specifications.

6.05 ROADWAY EXCAVATION

The extent of excavation shall be as shown on the Contract Drawings or otherwise approved by the City and shall include roadway excavation and/or filling and grading, together with the removal of trees, bushes, existing asphalt, concrete, or other material, as required to facilitate construction and restoration as directed by the City.

All excavation Work shall conform to all applicable requirements of FDOT-SSRBC Section 120 “Excavation and Embankment” except as modified herein.

6.06 TRENCH EXCAVATION

Mechanical excavation shall be terminated at least 2 inches above the proposed pipe bed and trench bottom, then shaped and compacted so as to provide uniform bearing on the barrel of the pipe. Particular care shall be taken to recess the bottom of the trench at the bell of the pipe to relieve the bell of all load.

A minimum trench width shall be maintained, allowing room for the jointing and proper compaction of the backfill. If material is encountered that is unsuitable in the opinion of the Engineer, it shall be removed by the Contractor and replaced with acceptable material compacted in place as specified. In the event the Contractor excavates below the elevation required without approval, the Contractor shall backfill with approved materials compacted to obtain a suitable trench bottom, all to the satisfaction of the Engineer and at no additional cost to the City.

The amount of open trench shall be limited so that no more than 100 feet of open trench in advance of the backfilling operation will remain at the end of that working day. All open trench shall be protected by the Contractor with barriers, warning devices, and traffic control devices, which shall be kept in the correct position, properly directed, anchored when required, and clearly visible at all times. The barriers, warning devices, and traffic control devices shall be suitably lighted at all times when vehicular traffic lights are required.

6.07 STRUCTURE EXCAVATION

Excavation shall be of the size and depth required for construction of structures and their foundations. Unsuitable material encountered shall be removed to the depth required to obtain sound foundation material or as ordered by the Engineer. Over-excavated areas shall be filled with approved backfill material compacted as specified, at no additional cost to the City.

Unsuitable existing soil shall be removed and replaced with compacted material, as approved by the Engineer and as specified in the subsection herein headed "Excavation of Unsuitable Material."

6.08 EXCAVATION OF UNSUITABLE MATERIAL

Unsuitable material shall include rock, concrete, and boulders. Unsuitable soft material shall include logs, muck, other soft soils, organic soils, and other soils as specified or as ordered by the Engineer to be unsuitable.

All excavation of unsuitable material shall conform to all applicable requirements of FDOT-SSRBC Section 120 “Excavation and Embankment” except as modified herein.

Unsuitable material encountered below or within the roadway stabilized subgrade, the trench bottom, or a structure bottom, shall be removed by the Contractor to the limits established by the Engineer and disposed of from the Work area at an approved disposal area. Unsuitable material shall be replaced with approved material and compacted as specified.

No additional payment will be made for backfill material obtained from any source and used to replace any unsuitable material except as otherwise specified.

6.09 SHEETING, SHIELDING, AND SLOPING

All excavations shall be properly sheeted, shielded, or sloped to the required slope to furnish safe working conditions, to prevent shifting of material, to prevent damage to structures or other Work, and to avoid delay to the Work, all in accordance with applicable safety and health regulations. The minimum sheeting and shielding for trench excavations shall meet the general trenching requirements of the Florida Trench Safety Act and OSHA standards.

The sheeting and shielding shall be of adequate strength and quantity for the purpose intended. Any sheeting extending below the level of above the top of pipeline shall be cut off as ordered by the Engineer and left in place. In addition, the Engineer may order the Contractor to cut off and leave in place any sheeting, shielding, or other approved support where required to protect construction, property, or existing facilities or utilities.

Damages resulting in the installation or removal of sheet piling shall be rectified by the Contractor at no additional cost to the City.

6.10 DEWATERING

A. All pipeline and appurtenances shall be laid entirely in a dry trench. All foundations and structure walls shall be constructed or installed in a dry excavation.

B. Before commencing any excavation at the site of the Work, the Contractor shall submit to the Engineer for review, the methods, equipment, and arrangement of facilities proposed for dewatering and disposal of water at the site and of all water entering any excavation or other part of the Work from any source whatsoever.

C. Water discharged from dewatering equipment shall be carried into surface drainage facilities except water quality treatment systems and shall not be discharged into sanitary sewer lines. The Contractor shall prevent water from puddling in streets or on private properties. The depositing of dirt in storm drains and ditches and staining of existing facilities shall not be permitted.

D. Adequate standby facilities shall be provided to ensure that the excavation will be kept dry in the event of power failure or mechanical breakdown. Facilities for the removal and disposal of water shall be of sufficient capacity to keep the excavation dry under all circumstances with one-half of the facilities out of service. If well points are used, provision shall be made for removing and resetting individual well points without taking the system of which they are a part out of service.

E. The City reserves the right to require the Contractor to replace noisy equipment in order to keep disturbance to a minimum.

F. The cost of dewatering and disposal of water shall be included in the unit quantity for each appropriate item bid.

G. Refer to the Specifications for requirements concerning encountered groundwater contaminates.

6.11 BORROW MATERIAL

Any borrow excavation Work shall consist of the excavation and satisfactory utilization of material from areas provided by the Contractor when necessary material is not available from the normal excavation or grading operations. This Work shall conform to DOT-SSRBC Section 120 “Excavation and Embankment” except as modified herein.

If additional fill material is required, it shall be City approved material supplied and compacted by the Contractor. All compaction under roadway, alley, driveway, curb, walk, or other improved surface shall be to a density as specified in the Contract Documents. Unless otherwise directed by the City, all material not required for construction shall be removed from the premises and disposed of by the Contractor.

6.12 BEDDING MATERIAL

A. Where shown, ordered, or required, the Contractor shall place bedding material prior to placing pipelines, structures, or slabs. Bedding material may be either excavated approved native sand, concrete sand, gravel, or reclaimed concrete.

B. Off-site bedding material shall be sand or gravel. Sand bedding material shall be a clean concrete sand of uniform gradation between sieve sizes No. 4 and No. 50. All particles shall pass a 3/8-inch sieve and no particles shall pass a No. 100 sieve.

C. Gravel bedding material shall meet the requirements of ASTM C33 and shall be coarse aggregate, DOT Size No. 67 (3/4-inch to No. 4) or approved equal.

D. Reclaimed concrete bedding material shall be graded to meet the size requirements as specified for gravel bedding.

E. Bedding material, where required, shall be placed in lifts and compacted in a manner to achieve the specified density as specified and/or as shown.

F. If gravel bedding is used, an impermeable groundwater barrier shall be placed at 100-foot intervals in the gravel bedding. The impermeable groundwater barrier shall consist of a 10

mil sheet of polyethylene covering the full cross sectional area of the gravel, embedded 6 inches into the trench sides and bottom, and extending to the top of the gravel. The barrier shall be offset a minimum of 2 feet from any culvert or pipe joint. Ends and splice points shall be lapped a minimum of 12 inches.

6.13 STRUCTURAL SLAB BEDDING

Structural slabs for manhole bases, footings, and similar structures shall be placed on approved compacted bedding material and leveled as specified and/or as shown.

6.14 BACKFILL MATERIAL

Backfill material shall consist of earth, loam, sandy clay, sand, gravel, soft shale, or other materials, free from organic materials, large clods of earth, or stones. Backfill material shall be either soil classification A-1, A-2 or A-3, per AASHTO M-145, and shall be free of organic matter, lumps of clay or marl, muck, compressible materials, and rock exceeding 2.5 inches in diameter. Broken concrete, masonry, rubble or other similar materials shall not be used as backfill.

6.15 BACKFILL COMPACTION

All backfill shall be compacted as specified herein and shall meet the following minimum density as determined by the AASHTO T-180 method for backfill outside the right-of-way and in City streets, and by the AASHTO T-99 method if in County or FDOT right-of-way.

AASHTO T-180 Method C or D will be used for stabilized subgrade and base compaction tests, and Method A or B will be used for backfill testing, or as directed by the Engineer or jurisdiction.

	T-180	T-99
Roadway stabilized subgrade	98%	N/A*
Roadway base	98%	N/A*
Curb base	98%	N/A
Sidewalk and driveway base	98%	N/A
Pipe bedding	98%	100%
Pipe backfill - under pavement	98%	100%
Pipe backfill - under grass	95%	100%
Structure base slabs	100%	N/A
Structure backfill	98%	N/A

*Roadway stabilized subgrade and base material shall meet LBR requirements as specified in the Contract Documents.

6.16 BACKFILLING OF TRENCH

Backfilling shall be accomplished with suitable material and shall commence only after the pipelines have been laid and tentatively accepted by the City. The space between the pipe and the sides of the trench shall be packed full by hand-shoveled earth free from lumps or debris.

The backfill material shall be placed in 6-inch lifts and compacted, using approved tampers to the required compaction, to a point 12 inches over the top of the pipe. The remaining backfill (under areas other than roadways) shall be placed in uniform lifts not greater than 12 inches thick (or less as approved for mechanical equipment available) and tamped to the required compaction. Backfill under roadways shall be compacted in 6-inch lifts.

Where trenches are improperly backfilled, or where settlement occurs, the trenches shall be reopened to the depth required for proper compaction, refilled and compacted, and the surface restored to the grade and compaction, mounded over and smoothed off.

6.17 BACKFILLING STRUCTURES

Backfill around structures shall be of suitable job-excavated material, suitable off-site fill material, or other material approved by the Engineer. Such backfill shall extend from the bottom of the excavation or top of bedding to the bottom of pavement base course, the bottom of the subgrade for lawns or lawn replacement, the top of the existing ground surface, or to such other grades as may be shown or required.

The backfill shall be placed in uniform lifts not greater than 12 inches thick, and thoroughly compacted in place.

6.18 BACKFILLING UNDER ROADWAYS

Backfill placed under roadways and other paved surfaces shall be compacted in 6 -inch lifts and thoroughly compacted in place, with suitable equipment as specified herein.

6.19 DISPOSING OF LEFTOVER MATERIAL

The Contractor shall bring the surface to the same level as existed prior to the excavation. All leftover material shall be hauled from the site and disposed of by the Contractor. Leftover material shall not be stored in or along rights-of-way or easements.

6.20 ADJACENT FACILITIES

The Contractor shall be responsible for the protection, removal, and replacement of all adjacent structures, utilities, trees, shrubbery, curbs, culverts, headwalls, fences, signs, and other miscellaneous structures encountered during the course of the Work.

6.21 TEMPORARY SUPPORTS

Temporary supports for 16-inch and larger pressure and gravity pipes shall be designed by the Contractor and submitted to the City as required by Specifications. Temporary supports that include a structural beam, or other such member(s), shall be designed, signed and sealed by a Professional Engineer.

6.22 FLOWABLE FILL

Where shown on the Contract Drawings, or where ordered by the Engineer, the Contractor shall backfill a void area or an excavation with flowable fill. Flowable fill may be shown, or ordered, to fill

abandoned pipes, abandoned underground steel storage tanks, trench backfill, washout area under structural slabs or behind walls, or other similar locations.

Flowable fill shall be produced and delivered to the site. Placing of flowable fill shall be by chute, pumping, or other approved methods. Flowable fill shall be placed to the designated fill line without vibration. The Contractor shall take all necessary precautions to prevent any damage caused by hydraulic pressure of the fill during placement prior to hardening. Flowable fill shall not be used for pipe bedding and backfill in the zone from the bottom of a pipe to 12 inches above the top of pipe.

Flowable fill shall consist of materials conforming to FDOT-SSRBC Sections as follows:

Cement (Type I or II)	Section 921	"Portland Cement and Blended Cement"
Fly ash (Type F)	Section 929	"Fly Ash, Slag, Microsilica and Other Pozzolanic Materials for Portland Cement Concrete"
Fine aggregate (sand)	Section 902	"Fine Aggregate"
Water	Section 923	"Water for Concrete"

The Contractor shall submit a proposed design mix that will produce a flowable fill meeting the strength requirements specified herein, using the following materials:

	Pounds per cubic yard
Cement (Type I or II)	50 - 200
Fly ash (Type F)	0 - 2,000
Fine aggregate (sand)	2,500 - 3,000
Water	325 - 550
Note: 6-inch to 10-inch slump	

Flowable fill material shall be proportioned to produce a 28-day compressive strength approximately as follows:

	Pounds per square inch
Pipe trench backfill	50 - 150
Fill abandoned pipes or tanks	30 - 150
Under slabs, behind walls	300 - 1000
Note: Density in place 115 to 145 pounds per cubic foot.	

Not more than 60 minutes shall elapse between the start of moist mixing and the placement of the flowable fill.

Flowable fill placed on slopes shall have a reduced slump with a reduction in water and shall be able to be shaped as required.

The Contractor shall place the flowable fill in such a manner as to eliminate all cavities.

Flowable fill shall not be placed in salt water. When within a tidal area, the flowable fill shall be placed immediately after the salt water has receded.

When flowable fill is used adjacent to ductile iron pipe, the pipe shall be polyethylene encased.

END OF SECTION

SECTION 7 - SURFACE RESTORATION

7.01 GENERAL

The Work in this section includes restoring and maintaining pavements and pavement bases, curbing, sidewalks, driveways, and grass surfaces that are disturbed, damaged, or destroyed during the course of the Work under this Contract.

The quality of workmanship and materials used in the restoration shall produce a surface equal to or better than the condition before the Work began.

Prior to restoration, the Contractor shall saw cut and remove all existing pavement within 2 feet of the edge of the excavation, or within such widths as may be ordered by the Engineer.

Compaction of soil and base materials shall be tested using the AASHTO T 180 method.

Surface restoration workmanship and materials shall conform to the applicable sections of the FDOT-SSRBC.

All dirt areas disturbed shall be restored with sod, unless otherwise specified.

7.02 ROADWAY RESTORATION

Where the installation of pipe or structures occurs within an existing roadway, the limits of excavation shall be saw cut leaving a straight and square edge. The upper portion of the trench backfill shall be replaced with a compacted shell, crushed (reclaimed) concrete, or limerock base as shown on the Contract Drawings, and paved to match the surrounding surface. Replacement base material shall be the same as the existing base. Roadway restoration shall conform to the detail for shown in the Contract Drawings.

7.03 TEMPORARY PAVEMENT

Immediately upon completion of backfilling, the pavement surfaces damaged or destroyed shall be temporarily restored by placing a shell (FDOT-SSRBC Section 911), crushed (reclaimed) concrete (FDOT-SSRBC Section 204 applicable sections), or limerock (FDOT-SSRBC Section 911) base on the backfilled, compacted subgrade, and an adequate temporary asphaltic patch as shown or as approved by the Engineer. Shell crushed (reclaimed) concrete, or limerock shall be used as a base for all bituminous pavements.

Temporary work shall be maintained in a suitable and safe condition for traffic until the permanent pavement is laid or until final acceptance of the Work.

7.04 SHELL BASE

Shell base shall be constructed on the prepared subgrade to not less than 98 percent of maximum density, in accordance with the requirements of FDOT-SSRBC Section 911. The minimum compacted thickness of shell base shall conform to the detail shown on the Contract Drawings.

7.05 LIMEROCK BASE

Limerock base shall be constructed on the prepared subgrade to not less than 98 percent of maximum density, in accordance with the requirements of FDOT-SSRBC Section 911. The minimum compacted thickness of limerock base shall conform to the detail shown on the Contract Drawings.

7.06 CRUSHED (RECLAIMED) CONCRETE BASE

Crushed (reclaimed) concrete base shall be constructed on the prepared subgrade to not less than 98 percent of maximum density, in accordance with the requirements of FDOT-SSRBC Section 204. The minimum compacted thickness of crushed (reclaimed) concrete base shall conform to detail shown on the Contract Drawings.

The minimum limerock bearing ratio (LBR) value shall be 150.

7.07 ASPHALTIC CONCRETE PAVEMENT

A prime coat shall be applied to the prepared base in accordance with FDOT-SSRBC Section 300 prior to permanent asphaltic concrete pavement.

Unless specified elsewhere, all permanent asphaltic concrete pavement replacement shall be constructed in accordance with the requirements of FDOT-SSRBC Sections 320, 330, 334, and 337. Surface types and compacted thickness shall conform to the detail shown on the Contract Drawings.

7.08 BRICK PAVEMENT

Construction of brick pavement shall follow the details as shown on the Contract Drawings and City standard practice using City standard paving brick or red clay brick conforming to ASTM C 32, Grade SS with City standard dimensions.

Brick street abutting asphalt pavement shall have a minimum 6-inch-wide flush Type A Header Curb.

7.09 CURB AND GUTTER

All permanent restoration of street curb, or curb and gutter, shall be of the same type and thickness as the curb, or curb and gutter, which abuts. The grade of the restored curb, or curb and gutter, shall conform to the grade of the existing adjacent curb, or curb and gutter, so that positive drainage is maintained.

7.10 CONCRETE SIDEWALK

The restoration and construction of concrete sidewalks shall conform to applicable requirements of FDOT-SSRBC Section 522 and the Contract Drawings and shall be constructed where shown on the Contract Drawings and directed by the City. Sidewalk expansion joints with bituminous filler shall be installed at a maximum of 50-foot intervals on center and struck joints shall be spaced equidistant with walk width (joints wider than 6 feet shall be spaced as directed by the City). Where

new construction is to be tied into existing facilities, the old material is to be removed back to the nearest construction joint, or sawcut to a straight line as directed by the City or Engineer. The soil under sidewalks and driveways shall be compacted to 98 percent of the maximum density.

New sidewalks shall be 4 inches thick. Concrete pour for walk construction shall be made only on dampened subgrade. A soft broom finish shall be given the walk surface as directed by the Engineer.

Sidewalks crossing driveways shall be constructed according to the Specifications for concrete driveways.

Curb ramps for physically handicapped shall be constructed at all locations where sidewalks cross the curb or where directed by the Engineer. Those existing sidewalks which are removed to accomplish associated work as a part of this Project shall be replaced with a curb ramp when the sidewalk crosses the curb. The cost of curb ramps shall be included in the appropriate proposal item for sidewalk restoration.

Where sidewalks are replaced, the replacement shall be the full width of the walk and the minimum length shall be 60 inches. Restoration of adjacent lawn is incidental to sidewalk replacement and no separate payment will be made therefore.

7.11 HEXAGON BLOCK SIDEWALK

The restoration and construction of hexagon block sidewalks shall conform to the details shown on the Contract Drawings and City standard practice using City standard hexagon blocks.

The soil under sidewalks and driveways shall be compacted to 98 percent of the maximum density. New hexagon block sidewalks shall be 2 inches thick.

Curb ramps for physically handicapped shall be constructed at all locations where sidewalks cross the curb, or where directed by the City or Engineer. Those existing sidewalks which are removed to accomplish associated work as a part of this Project shall be replaced with a curb ramp when the sidewalk crosses the curb. The cost of curb ramps shall be included in the appropriate Pay Item for sidewalk restoration.

Where sidewalks are replaced, the replacement shall be the full width of the walk. Restoration of adjacent grass is incidental to sidewalk replacement and no separate payment will be made therefore.

7.12 DRIVEWAY AND PARKING LOT

Except as otherwise specified, all permanent restoration of base and surface of driveways, parking aprons, and sidewalks shall match the materials, thicknesses, elevations, lines, and grades of the existing construction, all to the Engineer's satisfaction. Patching of Portland cement driveway areas will not be allowed between joints or dummy joints.

For areas where streets are to be paved, or where more than 50 percent of the driveway apron is disturbed, concrete or brick driveways shall be replaced in kind. All other driveways, including shell

and dirt, shall be restored with an asphalt concrete surface from the street to the property line or front of sidewalk, as directed by the City or Engineer.

All base compaction under driveways shall be to a minimum density of 98 percent of the maximum density.

7.13 DRIVEWAY - ASPHALT

Residential asphalt driveway restoration shall include 1-inch thick asphaltic concrete surface over 2 inches of compacted sand-asphalt hot mix base, or 5 inches of compacted limerock or shell base.

Commercial asphalt driveway restoration shall be constructed of 1-inch thick asphaltic concrete surface over 8 inches of limerock base compacted in 2 lifts.

7.14 DRIVEWAY - CONCRETE

The restoration and construction of concrete driveways shall conform to applicable requirements of FDOT-SSRBC Section 522 and the Contract Drawings and shall be constructed where shown on the Contract Drawings and directed by the City or Engineer.

Residential concrete driveway restoration shall be 5 inches thick and shall include placing a single layer of 6-inch by 6-inch wire mesh (WWF 6 x 6 - W1.4 x W1.4).

Commercial concrete driveways shall be 6 inches thick with a double layer of 6-inch by 6-inch wire mesh (WWF 6 x 6 - W1.4 x W1.4).

7.15 DRIVEWAY - PEAGRAVEL

Where less than 50 percent of the driveway apron is disturbed, pea gravel driveways shall be restored to match the existing driveway. Pea gravel driveway restoration shall include asphalt treated shell base 5 inches thick after compaction to a minimum density of 98 percent of the maximum.

7.16 DRIVEWAY - SHELL

Where less than 50 percent of the driveway apron is disturbed, shell driveways shall be restored to match the existing driveway. Shell driveway restoration shall be 5 inches thick after compaction to a minimum density of 98 percent.

7.17 GRASS

7.17.01 Sodding

Sod shall be planted as soon as practical after paving, pipeline, or other work has been completed. Sodding shall always be used over seeding.

All work and materials shall meet the applicable requirements FDOT-SSRBC Section 570 (Sodding).

Sodding shall be done as directed by the Engineer, using only material which, in the opinion of the Engineer, is healthy and free of weeds, and (unless specified otherwise by the Engineer) of the same variety predominating at time of removal. Sod may be St. Augustine, Bahia, or other varieties as selected by the Engineer.

Sod shall be planted within 72 hours of being cut. Only moist, green sod having a virile root system may be planted. Sod shall be cut into adjacent sod to provide a smooth surface, and "top dressed" where necessary. Sod shall be rolled or tamped after planting to provide a uniform and consistent grade.

7.17.02 Grass Maintenance

The Contractor shall properly water and otherwise maintain all seeded and sodded areas for a minimum of 60 consecutive calendar days after completion of sodding operations. After the 60 days, and upon receipt of written request from the Contractor, the Engineer will inspect the areas for acceptance by the City. Any area that is washed or eroded, fails to show a uniform stand of healthy, vigorous grassing, or does not appear to be otherwise developing satisfactorily, shall be re-sodded and maintained until suitable for acceptance by the Engineer.

In the event that the stand of grass is found to be contaminated by weeds or other undesirable growth, the Contractor will be required to effectively eliminate such undesirable growth at his own expense.

7.18 EXPANSION JOINT MATERIAL

Expansion joint material for concrete pavement surfaces, including sidewalks and driveways, shall be the bituminous strip type, 1/2-inch thick, and shall conform to applicable requirements of FDOT-SSRBC Section 932.

END OF SECTION

THIS PAGE INTENTIONALLY LEFT BLANK

SECTION 8 – PAINTING

8.01 GENERAL

Painting materials not obtainable from the prime manufacturer shall be obtained from a second source recommended by the prime manufacturer for compatibility. All products furnished shall meet current Federal Regulations for lead, mercury and other heavy metals, as well as current VOC air quality regulations. Products of the following acceptable manufacturers may be used on this project, except where noted otherwise.

A. Ameron – Corrosion Control Division
B. Devoe & Raynolds Company
C. Indurall
D. KopCoat –RPM
E. MAB Paints
F. PPG Industries, Inc.
G. Rust-Oleum Corporation
H. Sherwin-Williams
I. Tnemec Company, Inc.

The Contractor shall paint or provide a protective coating for all interior and exterior wood and metal surfaces, all interior masonry, valves, and all submerged piping and other metal, whether specifically called for or not. In addition, all exposed piping shall be painted and further identified in accordance with other sections of these specifications. Because of their very nature, some areas or items do not require specific painting or coating for protection or appearance. The following generally do not require painting or coating unless specifically noted otherwise or required by manufacture, color coding, insulation from dissimilar metals, insulation from concrete or cement products, or architectural considerations:

A. Non-Ferrous Alloys:

Aluminum
Monel
Stainless Steel

B. Corrosion Resistant Metals:

Chromium Plated Steel
Weathering Steel
Galvanized Steel

C. Non-Metallic Materials:

Exterior Brick
Concrete
Glass

	Plastic &FRP
	PVC
	Porcelain
Pre-Finished Manufactured Items:	Cabinets
	Louvers
	Motor Control Centers
	Panels
	Signs and Nameplates
	Switchgear
	Switchboards
	Transformers
	Tile

D. Electrical Conduits Attached to Unpainted Surfaces.

E. Insulation and Insulation Jackets.

All exposed piping and conduit within the fence enclosure shall be color-coded in accordance with the following Color Coding Schedule:

A.	Electric	Gray
B.	Gas, Oil, Dangerous Materials	Red
C.	Telephone, Telegraph, Television, Communications	Safety Alert Orange
D.	Potable Water	Safety Blue
E.	Treated Sewage	Safety Green

Other paint colors will be selected by the Engineer

All materials shall be pure and first quality. Materials listed shall be the standard for each such type of material. Primers and finish coats shall be compatible and of the same manufacture where possible. Emulsion and alkyd paints shall contain a mildewcide, and both the paint and mildewcide shall conform to OSHA and Federal requirements, including Fed. Spec. TT-P-19. Paint and protective coating materials shall be sealed in containers that plainly show the designated name, formula or specification number, batch number, color, date of manufacture, manufacturer's directions, and name of manufacturer, all of which shall be plainly legible at the time of use. Pigmented paints shall be furnished in containers not larger than five (5) gallons. Materials shall conform to the specifications shown herein and to the requirements hereinafter specified.

To the maximum extent possible, all products shall be the product of one manufacturer unless a specific specialty coating system is specified. Without exception, all coatings for any service condition specified herein shall be by one manufacturer. Once a paint manufacturer has been selected by the Contractor and approved by the Engineer, the Contractor shall ensure that all

equipment manufacturers prime their equipment with the same or a compatible primer. If this cannot be or is not done for any reason, the Contractor shall apply a "universal primer" and recoat with the approved manufacturer's product in the field.

8.02 SUBMITTALS

Submittals shall be in accordance with the following:

A. Samples. Prepare and submit for Engineer's approval copies of color samples on 8-1/2" x 11" size cards for each paint and protective coating system. Each sample card shall clearly show each coat of the finish system, and shall be clearly marked with the manufacturer's name and product identification, and shall be submitted in sufficient time to allow for approval and, if necessary, disapproval and resubmittal without causing any delay of the project.

B. Coating Materials List.
   1. The Contractor shall provide copies of a paint and coating materials list which indicates the manufacturer and paint number, keyed to the coating schedule herein, for approval by the Engineer prior to or at the time of submittal of samples required herein.
   2. The Contractor shall include with his submittal, his protective coating schedule for shop and field coatings of items to receive protection. The schedule shall conform to the specified requirements for surface preparation, priming, and coating for items covered, and shall follow the same requirements for similar work where such work has not been specifically called-out. No bare ferrous nonworking surfaces shall be omitted from the schedule. Particular care shall be taken to cover in sufficient detail the coating of mechanical joints and other mechanical devices which shall conform to the recommended practice of the manufacturer of the joint or other mechanical devices.
   3. Coatings to be used on plastic and fiberglass materials shall be certified as acceptable by all plastic and fiberglass manufacturers whose products are to be coated. Certification copies shall be submitted to the Engineer. The Contractor shall be certified in writing by the painting and coating material manufacturers as qualified applicators of their products with copies of the certification submitted to the Engineer.

C. Product Data Sheets. Contractor shall submit paint and coatings material manufacturers' printed technical data sheets for products intended for use in each paint and coating system. Data sheets shall fully describe material as to its intended use, makeup, recommended surface preparation and application conditions, primers, material mixing and application (including recommended dry mil thickness recoat time), precautions, safety and maintenance cleaning directions.

D. Material Safety Data Sheets. Material Safety Data Sheets (MSDS) shall accompany all paint submittals and shall be prominently displayed at the job site during all painting activities.

8.03 PAINTING SCHEDULES AND SYSTEMS

Painting and coating of surfaces shall conform to the following schedules and systems, unless otherwise specified or shown on the drawings:

A. Schedule A: System 1 – Exposed exterior structural and miscellaneous steel, piping, equipment to include all stainless steel and carbon steel electrical control cabinets non-submerged, not exposed to corrosion, splash, fumes or immersion conditions.

1. Prime: One sprayed coat of a combination of a two-part epoxy primer, gray, of 3.0 mils, minimum dry film thickness as by Devoe Paints, Tru-Glaze Epoxy Primer Nos. 12735 and 12702 (ratio 19:1) or equal. If shop coat is damaged, re-prime bare areas in the field. The exterior of electrical cabinets, in stainless steel, shall be sand-blasted and spray-primed per the paint manufacturer's instructions.

2. Finish: Two coats of "hanging moss green" (Devoe Paints FX-70), Semi-Gloss Advanced Technology Acrylic Resin of 1.5 to 2.0 mils, dry thickness as Exterior Waterborne Semi-Gloss Enamel #83XX by Devoe Paints, or equal. Coats to be applied by spray painting in the shop.

B. Schedule B: System 2 – Piping and pumping equipment – submerged or non-submerged, exposed to spray, splash or corrosive atmosphere, excluding chains and sprockets, and stainless steel bracing in the wetwell:

1. Prime: One coat chemical resistant red iron oxide, based on a polyamide cured epoxy resin, minimum of 3.0-5.0 mils dry film thickness as by Devoe Paints, Devron 201. If shop coat is damaged, re-prime bare areas in the field.

2. Finish: Two coats of polyamide cured, epoxy resin coating, minimum of 4.0-6.0 mils dry film thickness per coat as by Devoe Paints, Devron 224HS-color, moss green as required above.

D. Schedule C; System 3 - Coating aluminum and non-ferrous metal surfaces, including undersides of aluminum access hatches, frames, and checkered plate, subject to corrosive atmosphere and condensation

1. Surface Preparation: Clean non-ferrous surfaces in accordance with 26 SSPC-SP7 (brush-off blast cleaning)
2. Prime: Minimum 3.0 mil DFT (Tnemec Primer – Series 66)
3. Finish: Minimum 4 mil DFT for a minimum total dry mil thickness of 7 mils (Tnemec Finish Coat – Series 66)

8.04 EXECUTION

All painting shall be done by skilled and experienced craftsmen and shall be of highest quality workmanship. Application of materials shall be done only on properly prepared surfaces as herein specified.

Before commencing work, the painter shall make certain that surfaces to be covered are in good condition. Should the painter find such surfaces not to be totally acceptable for covering, he shall report such fact to the Engineer. The application of paint shall be held as acceptance of the surfaces and working conditions and the painter will be held responsible for the results reasonably expected from the materials and processes specified.

Only compatible materials shall be used in the work. Particular attention shall be directed to compatibility of primers and finish coats. If necessary, subject to approval of the Engineer, a compatible barrier coat shall be applied between all existing prime coat and subsequent field coats to ensure compatibility. Ductile iron pipe that has an exterior bituminous coating shall not be painted unless the bituminous coating is removed by sand blasting or an appropriate, compatible, intermediate coat is applied before top coating in accordance with this specification

Hardware, hardware accessories, machined surfaces, nameplates giving manufacturer's data, cover plates, grease fittings, lighting fixtures and similar items in contact with painted surfaces and not to be painted shall be removed, masked, or otherwise protected prior to surface preparation and painting operations so they remain clean and free from paint.

Ferrous metals (not shop primed) shall be sandblasted per SSPC-SP6 to remove mill scale and rust. Ferrous surfaces to be submerged or exposed to spray, splash, fumes or corrosive atmosphere shall be sandblasted to near-white metal blast cleaning according to SSPC-SP 10. Brush blast or clean other metals as appropriate to provide suitable surface. Surface profile as obtained from sandblasting shall be recommended by the coating manufacturer. All metal surfaces shall be completely degreased by solvent cleaning in compliance with SSPC-SP 1.

Galvanized surfaces shall be cleaned of dirt, grease and other foreign substances and solvent cleaned. Surfaces shall be pro-treated with one coat of proprietary acid bound resinous or crystalline zinc phosphate preparation, used in accordance with the manufacturer's directions.

Remove glaze, of florescence, dirt, loose particles and grease (and existing paint, if applicable) from concrete receiving masonry paint. Fill all cracks, cut out defective joints and repaint.

In addition to the above listed surface preparations, all dirt, rust, scale, splinters, loose particles, disintegrated paint grease, oil and other deleterious substances shall be removed from all surfaces that are to be coated.

Work shall be done only under favorable weather conditions and as recommended by paint supplier. Exterior painting shall be done only in dry weather. Any surface coating damaged by moisture or rain shall be removed and redone as directed by the Engineer. Coatings shall be mixed, thinned, tinted and applied in accordance with the manufacturer's recommendations. The Contractor shall tint or match colors as selected by the Owner. A sample shall be applied on the job for review and approval before work is actually done. No thinners shall be used except those specifically mentioned and only in such quantity as directed by the manufacturer's instructions. If thinning is used, sufficient additional coat shall be applied to assure the required dry film thickness is achieved.

The manufacturer's recommended thinner or cleanup solvent shall be used for all cleanup. Application by brush, spray, airless spray or roller shall be as recommend by the manufacturer for

optimum performance and appearance. Paint shall be applied in a neat manner with finished surface free of runs, sags, ridges, laps and brush marks.

Each coat shall be applied in a manner that will produce an even film of uniform and proper thickness, and no variation in sheen or color. Where more than one coat of paint is specified, each coat shall be sufficiently tinted to result in a perceptible difference in shades of the various coats of paints so that the application of subsequent coats can be properly and uniformly spread and inspected. Provision shall be made to allow thorough drying between coats as recommended by the manufacturer before the next coat is applied, and paint used in successive field coats shall be produced by the same manufacturer.

Seal coats shall be used over bitumen-coated surfaces as applicable. Plastic pipe shall be painted in accordance with the pipe manufacturer's recommendations. Pipes, shoot metal ducts and other metal items which are to be installed in inaccessible locations shall be painted prior to installation.

Pumps, motors, machinery, equipment, electrical panels and other manufactured items shall have surfaces prepared, primed and coating in accordance with the recommendations of the manufacturer, and be given at least one touch-up coat with the intermediate coat material and one compete finish cost in the field.

The prime and intermediate coats for the various coating systems shall be as specified earlier and shall be compatible with the field coat or coats. Paint used in the first field coat over shop painted or previously painted surfaces shall cause no wrinkling, lifting or other damage to underlying paint.

All completed surfaces will be checked by the Engineer, and the Contractor shall provide the necessary properly calibrated gages. All non-ferrous surfaces shall be checked for number of coats and thickness by use of a Tooke gage. All ferrous surfaces shall be checked for film thickness by use of Elcometer or Micro-Test magnetic dry film gauge properly calibrated. . The Engineer shall have the right to reject all material for work that is unsatisfactory and require the replacement of either or both at the expense of the Contractor.

All paint brushed, splattered, spilled, or splashed on any surface not specified to be painted shall be removed. Upon completion of the painting work, the Owner shall be furnished one (1) gallon of each type and color of finish paint for touching up at no additional cost. Paint container labels, in addition to other required information, shall have location of color and type marked thereon.

Surfaces to be painted shall be inspected before any paint materials are applied, and after preparation has been completed.

Painted surfaces shall be inspected between coats, prior to application of next coat of painting material. Failure to get acceptance between coats will nullify credits for coats previously applied.

All paint shall be delivered to the job site in unopened original containers.

All paint not intended for the job shall be removed from the job site.

END OF SECTION

SECTION 9 - PIPING MATERIALS: DUCTILE IRON PIPE AND FITTINGS

9.01 GENERAL

The Work in this section includes furnishing all ductile iron pipe, fittings, joints, and appurtenant materials. All castings furnished shall have been cast in the United States of America unless complete certification is furnished in accordance with the latest edition of ANSI/AWWA C 110.

Standards referenced in this section are the latest revision of the following specifications:

ANSI/AWWA C104	"Cement Mortar Lining for Ductile-Iron Pipe and Fittings for Water"
ANSI/AWWA C110	"Ductile-Iron and Gray Iron Fittings, 3-Inch through 48-Inch, for Water and Other Liquids"
ANSI/AWWA C111	"Rubber-Gasket Joints for Ductile-Iron and Pressure Pipe and Fittings"
ANSI/AWWA C115	"Flanged Ductile-Iron Pipe with Threaded Flanges"
ANSI/AWWA C150	"Thickness Design of Ductile-Iron Pipe"
ANSI/AWWA C151	"Ductile-Iron Pipe, Centrifugally Cast, for Water or Other Liquids"
ANSI/AWWA C153	"Ductile-Iron Compact Fittings, 3-Inch through 24-Inch, for Water and Other Liquids"
ASTM D 1248	"Polyethylene Plastics Molding and Extrusion Materials"

9.02 PIPE

9.02.01 GENERAL

All ductile iron pipe shall be designed in accordance with ANSI/AWWA C150. Pipe shall be minimum pressure class as follows:

Size	Pressure Class
3-inch through 18-inch	350
20-inch through 24-inch	300
30-inch through 48-inch	200

For threaded flanged pipe the minimum thickness shall be the nominal thickness as shown on Table 15.1 of ANSI/AWWA C115.

Thickness shall be designed for a flat-bottom trench backfill lightly consolidated to centerline of pipe. Pipe shall be manufactured in accordance with ANSI/AWWA C151.

The pressure rating, metal thickness class, net weight of pipe (without lining) length of pipe, name of manufacturer, "DI" or "DUCTILE," and country where cast, shall be clearly marked on each length of pipe.

The Contractor shall take extreme care when handling pipe and fittings to ensure the interior lining does not get damaged during construction. Lined pipe and fittings must be handled only from the outside of the pipe and fittings. No forks, chains, straps, hooks, etc. shall be placed inside the pipe and fittings for lifting, positioning, or laying. The pipe shall not be dropped or unloaded by rolling.

Care should be taken not to let the pipe strike sharp objects while swinging or being off loaded. Ductile iron pipe should never be placed on grade by use of hydraulic pressure from an excavator bucket or by banging with heavy hammers.

9.02.02 LINING

A. **Potable Water Lines and Reclaimed Water Lines**: Ductile iron pipe and fittings for use in potable and reclaimed water lines shall be cement mortar lined. Cement lining shall conform to ANSI/AWWA C104, and seal coated with approved bituminous seal coat in accordance with ANSI/AWWA C151. Seal coating shall be UL listed or NSF approved for use in potable water mains.

B. **Sanitary Force Mains and Gravity Sanitary Pipe**: Ductile iron pipe and fittings for sanitary sewer force mains and gravity sewer pipe shall be polyethylene, polyurethane, or epoxy lined.

   Epoxy lining shall be 40 mil minimum thickness (multi-pass process) and shall be Protecto 401 Ceramic Epoxy, as manufactured by the Protecto Division of Vulcan Painters, Inc., or approved equal.

   Polyethylene lining shall be factory furnished with a fusion bonded polyethylene liner of 60 mil minimum thickness conforming to ASTM D1248, such as Polybond Plus as furnished by American Cast Iron Pipe Co. or approved equal.

   Polyurethane lining shall be factory applied conforming to Corropipe, as manufactured by Madison Chemical Industries, Inc., or an approved equal. Material shall be applied in conformance with the manufacturer's recommendation and shall be a 40-mil final dry film thickness.

   For any lining method, to ensure a holiday-free lining, documentation must be provided, prior to shipment, showing each section of lined pipe has passed holiday testing at the time of production per ASTM G62. The lining shall have a minimum three (3) year warranty covering failure of the lining and bond failure between liner and pipe.

C. **Storm Drain Gravity Pipe**: Ductile iron pipe and fittings for storm drain gravity pipe shall be epoxy lined as per sanitary pipe or cement mortar lined as per water pipe, at the Contractor's option.

9.03 FITTINGS

Ductile iron fittings shall conform to ANSI/AWWA C110 or ANSI/AWWA C153.

Fittings shall be suitable for a minimum water pressure plus water hammer as follows:

Size	Type	Pressure Rating
3-inch through 12-inch	DI	350
14-inch through 24-inch	DI	350
30-inch through 48-inch	DI	250

Fittings shall be coated outside with petroleum asphaltic coating, 1 mil minimum thickness.

Fittings shall be lined as specified herein headed "4.02 Pipe."

Anchor couplings equal to McWayne Clow F-1211 for fire hydrant assemblies may be substituted with an anchoring tee equal to Catalog No. A-10180 locked hydrant tee as manufactured by American Ductile Iron Pipe Co. or hydrant tee with rotatable MJ gland as manufactured by U.S. Pipe Co. in place of the MJ tee and anchor coupling as shown, at the Contractor's option.

9.04 JOINTS - BURIED PIPE AND FITTINGS

Joints for ductile iron pipe and fittings shall conform to ANSI/AWWA C111, except as otherwise specified. All pipe and fittings shall be furnished complete with joint accessories necessary for installation conforming to ANSI/AWWA C111. No additional payment will be made for joint accessories, including retainer glands, unless otherwise specified.

When deflection is required the joint shall be completed prior to setting the deflection. The deflection shall conform to applicable AWWA Standards or manufacturer's recommendation with prior Engineer's approval.

The Contractor shall furnish and install all necessary materials, equipment, and appurtenances required to complete the work.

A. **Unrestrained Joints**: Joints for unrestrained pipe shall be push-on joint. Joints for fittings, when installed with unrestrained pipe, shall be mechanical joint with DI retainer glands, as specified herein for restrained joints.

B. **Restrained Joints**: All joints in restrained pipe systems shall be of the same type (pipe and fittings), except valves shall be mechanical joint with DI retainer glands as specified.

1. **12-inch and Smaller**: Joints for restrained pipe and fittings, 12-inch and smaller, shall be one of the following:

a. Push-on restrained joint utilizing a retainer ring, equal to U.S. Pipe TR Flex. It shall be UL listed, FM approved, or shall be certified by an approved laboratory that the restrained joint will not separate at the specified test pressure.

b. Push-on restrained joint using a locking type gasket, equal to Field-Lok, as manufactured by U.S. Pipe and Foundry, Inc. It shall be UL listed, FM approved, or shall be certified by an approved laboratory that the restrained joint will not separate at the specified test pressure.

c. Mechanical joint with DI retainer glands shall be furnished with retainer glands equal to Series 1100 Megalug, as manufactured by EBAA Iron Inc., Stargrip 3000 as manufactured by Star Pipe Products, or DI MJ Gripper Gland as manufactured by U.S. Pipe and Foundry Co. for use with ductile iron pipe. All retainer glands shall be UL listed, FM approved, or shall be certified for 350 psi pressure rating with a 2:1 safety factor.

2. **Larger than 12-inch**: Joints for restrained pipe and fittings larger than 12-inch shall be as follows:

   a. Restrained pipe joints shall be modified push-on restrained joint, equal to U.S. Pipe TR Flex, and shall be UL listed or FM approved.

   b. Fittings joints shall be equal to U.S. Pipe TR Flex or shall be mechanical joint with DI retainer glands. Retainer glands shall be equal to Series 1100 Megalug or Stargrip 3000 for 16-inch and larger pipe. All retainer glands shall be UL listed, FM approved, or certified for 350 psi pressure rating (for 16-inch) and 250 psi pressure rating (for larger than 16-inch) with a 2:1 safety factor.

   c. Valve joints shall be mechanical joint with DI retainer glands as specified herein for larger than 12-inch fittings joints.

9.05 JOINTS - EXPOSED PIPE AND FITTINGS

Joints for exposed ductile iron pipe and fittings shall be restrained, except as otherwise noted on the Contract Drawings. Joints for exposed pipe in plants and in vaults shall be flanged where noted on the Contract Drawings.

Joints for exposed pipe and fittings 12-inch and smaller shall be modified push-on restrained joint using a retainer ring, or modified push-on joint using a locking type gasket, as specified herein headed "4.04 Joints - Buried Pipe and Fittings."

Joints for exposed pipe and fittings larger than 12-inch shall be modified push-on restrained joint using a retainer ring as specified herein headed "4.04 Joints - Buried Pipe and Fittings."

9.06 DETECTION

Pipe shall have 3-inch detectable metallic tape of the proper color placed directly above the pipe and 12-inch below finished grade or 6-inch detectable tape between 12-inch and 24-inch below finished grade.

Pipe shall also have tracer wire installed along the pipe alignment. The tracer wire to be used shall be a solid, 10-gauge, high strength, copper clad steel wire with a polyethylene jacket of appropriate color manufactured by Copperhead Industries or approved equal.

9.07 ZINC/EPOXY/FLUOROPOLYMER PROTECTIVE COATING

Joints and Pipe exposed to extreme coastal environments including, but not limited to, aerial ocean crossings shall have this system or an approved equal applied as a protective coating.

Surface Preparation: SSPC-SP6/NACE No.3 Commercial Blast Cleaning with a minimum 1.5 mil angular anchor profile.

Tnemec	Coating Thickness
Primer: Series 90-97 Tneme-Zinc	2.5 - 3.5 mils
2nd Coat: Series 66HS Hi-Build Epoxoline	3.0 - 6.0 mils

3rd Coat: Series 700 Hydroflon	2.0 - 3.0 mils

Total Dry Film Thickness: 7.5 - 12.5 mils

Minimum Dry Film Thickness: 9.5 mils

END OF SECTION

THIS PAGE INTENTIONALLY LEFT BLANK

SECTION 10 - PIPING MATERIALS: PVC PRESSURE PIPE

10.01 GENERAL

The Work in this section includes furnishing all Polyvinyl Chloride (PVC) pressure pipe and fittings. PVC pressure pipe includes all PVC pressure pipe 2-inch through 36-inch.

Standards referenced in this Section are the latest revision of the following specifications:

ANSI/AWWA C900-16	"Polyvinyl Chloride (PVC) Pressure Pipe and Fabricated Fittings, 4 In. Through 60 In."
ANSI/AWWA C110	"Ductile-Iron and Gray-Iron Fittings, 3-Inch through 48-Inch for Water"
ANSI/AWWA C111	"Rubber-Gasket Joints for Ductile-Iron Pressure Pipe and Fittings"
ANSI/AWWA C153	"Ductile-Iron and Gray-Iron Fittings, 3-Inch through 48-Inch for Water"
ASTM D 1784	"Standard Specification for Rigid Poly (Vinyl Chloride) (PVC) Compounds and Chlorinated Poly (Vinyl Chloride) (CPVC) Compounds"
ASTM D 1785	"Standard Specification for Poly (Vinyl Chloride) (PVC) Plastic Pipe, Schedules 40, 80, and 120
ASTM D 2241	"Standard Specification for Poly (Vinyl Chloride) (PVC) Pressure-Rated Pipe (SDR Series)"
ASTM D 3139	"Standard Specification for Joints for Plastic Pressure Pipes Using Flexible Elastomeric Seals"

10.02 PIPE

A. **Two-inch Pipes**: All 2-inch PVC pipe shall meet ASTM D 1784 specification for rigid PVC compounds and ASTM D 2241 specification for PVC plastic pipe. PVC pipe shall be suitable for use at maximum hydrostatic working pressure of 160 psi at 73°F. Pipe shall have a standard dimension ratio (SDR) 26 and bear the NSF Seal for potable water pipe.

B. **4-inch Through 36-inch Pipes**: PVC pressure pipe 4-inch through 36-inch shall meet the requirements of ANSI/AWWA C900-16, with outside diameter dimensions of ductile iron pipe. All 4-inch through 36-inch PVC pressure pipe shall be Class 235 and DR18.

C. **UV Resistant PVC Pipe**: All PVC piping exposed to sunlight shall contain titanium dioxide for UV resistance, and shall conform to ASTM D 1784 and ASTM D 1785 (IPS). The Contractor shall submit the manufacturer's certificate of conformance to the City. Pipe shall be marked with manufacturer's identification.

10.03 FITTINGS

A. **Two-inch Pipes**: Gasketed joint standard dimension ratio (SDR) 21 PVC or galvanized steel fittings shall be used with all 2-inch PVC pipe. PVC adapters, Harco as manufactured by the Harrinton Corporation or approved equal, shall be used for jointing to 2-inch gate valves, galvanized fittings, and existing threaded pipe.

B. **Four-inch Through 36-inch Pipes**

1. **Molded PVC Pressure Fittings**: Fittings for 4-inch through 8-inch sanitary sewer pressure pipe shall be molded PVC pressure fittings, unless DI fittings are directed by the Engineer. Molded PVC fittings shall meet the requirements of ANSI/AWWA C900-16 and shall be Harco Class 150 as manufactured by the Harrington Corporation, or approved equal, as directed by the Engineer.

2. **DI Fittings**: Fittings for pipe larger than 8-inch shall be DI, mechanical joint. DI fittings for 4-inch through 36-inch PVC pressure pipe shall conform to ANSI/AWWA C110 or C153 and shall conform to the Technical Specifications section headed "Piping Materials: Ductile Iron Pipe and Fittings."

C. Where flanged fittings are shown, specified, or directed by the Engineer, adapter flanges shall be used on plain end PVC pipe. Adapter flanges shall be suitable for PVC pipe and be equal to Uni-Flange Series 900 as manufactured by Ford/Uni-Flange, Wabash, Indiana.

10.04 JOINTS

Pipe joints shall be plain end, rubber gasket push-on joints, unless otherwise shown. Push-on joints shall meet the requirements of ASTM D 3139.

Joints to DI fittings shall be rubber gasket mechanical joints with retainer glands, unless otherwise shown. All retainer glands shall be UL listed or FM approved. The retainer glands shall be installed in accordance with the manufacturer's recommendations.

When deflection is required the joint shall be completed prior to setting the deflection. The deflection shall conform to applicable AWWA Standards or manufacturer's recommendation with prior Engineer's approval.

Mechanical joints shall meet the requirements of ANSI/AWWA C111.

10.05 DETECTION

Pipe shall have 3-inch detectable metallic tape of the proper color placed directly above the pipe and 12-inch below finished grade or 6-inch detectable tape between 12-inch and 24-inch below finished grade.

Pipe shall also have tracer wire installed along the pipe alignment. The tracer wire to be used shall be a solid, 10-gauge, high strength, copper clad steel wire with a polyethylene jacket of appropriate color manufactured by Copperhead Industries or approved equal.

10.06 MARKINGS AND COLOR CODING

In addition to the standard markings required by ANSI/AWWA C900-16, the letters NSF denoting National Sanitation Foundation approval shall be included in the marking system, on each pipe length and fitting.

PVC pipe shall be manufactured of solid color as specified, or white with continuous colored ink lettering. The applicable color codes, with light color stabilant, are as follows:

Pipe Use	Color Coding
Potable Water	Safety Blue
Sanitary Sewer	Safety Green
Reclaimed Water	Safety Purple

UV resistant PVC pipe shall be solid color as specified above, or white with colored lettering as specified above.

10.07 HARNESSING

Ductile iron fittings with mechanical joints used with PVC pipe that require harnessing, shall be provided with ductile iron retainer glands such as Series 2000 PV Megalug as manufactured by EBAA Iron Inc., Stargrip 4000 as manufactured by Star Pipe Products, or approved equal.

PVC push-on joints for pipe in casings, for joints to PVC pressure fittings, or where shown, shall be harnessed using a ductile iron retainer for push-on joint PVC pipe, such as Series 1600 as manufactured by EBAA Iron Inc., Series 1100 as manufactured by Star Pipe Products, or approved equal.

10.08 INSPECTION AND TESTING

All pipelines shall remain undisturbed for 24 hours to develop complete strength at all joints. All pipelines shall be subjected to a hydrostatic pressure and leak test per the Specifications.

END OF SECTION

THIS PAGE INTENTIONALLY LEFT BLANK

SECTION 11 - PIPING MATERIALS: HDPE PRESSURE PIPE

11.01 SCOPE OF WORK

The Contractor shall furnish all labor, materials, equipment and incidentals required to install polyethylene pressure pipe, fittings and appurtenances as shown on the Contract Drawings and specified in the Contract Documents and these Standards.

Newly installed pipe shall be kept clean and free of all foreign matter & gouges.

All pipe shall be correctly color coded / identified.

11.02 QUALIFICATIONS

All polyethylene pipe, fittings and appurtenances shall be furnished by a single manufacturer who is fully experienced, reputable and qualified in the manufacture of the items to be furnished.

11.03 POLYETHYLENE PRESSURE PIPE

A. Polyethylene pipe 4" diameter and larger shall be high-density bimodal PE4710 polyethylene resin with a minimum cell classification of 445574 per ASTM D3350, Class 200, DR 11, meeting the requirements of AWWA C906. All pipe materials used in potable water systems shall comply with NSF Standard 61. Outside diameters of water, reclaimed water and pressure sewer HDPE pipes shall be ductile-iron pipe sizing system (DIPS).

B. Polyethylene tubing 2 inches in diameter and smaller for potable water and reclaimed water shall be high-density PE4710 polyethylene resin with a minimum cell classification of 445574 per ASTM D3350, Pressure Class 200, Copper Tube Size (CTS), SDR 9, meeting the requirements of AWWA C901 and ASTM D2737. Butt fusion or CTS brass connections shall be used. All pipe materials used in potable water systems shall comply with NSF Standard 61.

C. Alternatively, polyethylene tubing 2 inches in diameter and smaller for potable water and reclaimed water shall be crosslinked high-density polyethylene (PEXa) 3306 pipe, Pressure Class 200, Copper Tube Size (CTS), SDR 9, meeting the requirements of AWWA C904. Butt fusion or CTS brass connections shall be used. All pipe materials used in potable water systems shall comply with NSF Standard 61.

D. All HDPE MJ Adapters (DIPS) shall be a DIPS Bell MJ Adaptor with a retaining gland, stainless steel reinforcing collar, gland ring, standard MJ gasket, and extra-long Tee-head bolts. The gland ring shall be ductile iron, C110, heavy body gland ring. Twist-off nuts, sized same as tee-head bolts, and shall be used to insure proper actuating of restraining devices.

11.04 JOINTS

Where PE pipe is joined to PE pipe, it shall be by thermal butt fusion. Thermal fusion shall be accomplished in accordance with the written instructions of the pipe manufacturer and fusion equipment supplier. The installer of the thermal butt fused PE pipe shall have received training in

heat fusion pipe joining methods and shall have had experience in performing this type of work. The date of technician certification shall not exceed 12 months before commencing construction.

Where thermal butt fusion cannot be used, or when specifically called for on the Contract Drawings, electro-fused couplings may be used. Fusion shall be in accordance with the written instructions of the fitting manufacturer. However, Contractor must get prior approval from the City and Engineer before implementing a fusion coupling. Solvent epoxy cementing, electro-fusion couplings and mechanical joining with bolt on wrap around clamps or mechanical joints without an adapter shall not be used for connections.

All fittings for HDPE pipe (4” and larger), except for D.I/HDPE Mechanical Joint Adaptors, shall be ductile iron mechanical joint fittings and shall be joined to the pipe using a butt fused restrained mechanical joint adapter. The D.I./HDPE mechanical joint adapter shall be connected to the HDPE pipe by a heat-fused joint on one end, and connected to a ductile iron pipe valve, or fitting with a mechanical joint on the other end.

Flanged adapter, mechanical adapter and molded fittings for 4-inch and larger pipe shall be Pressure Class 200, PE4710, Ductile Iron Pipe Size (DIPS), DR 11, conforming to AWWA C906 with min. cell classification of 445474 per ASTM D3350. Mechanical joints and fittings for 2-inch and smaller tubing shall meet the requirements of: AWWA C901, ASTM D3350 and ASTM D3140.

11.05 DETECTION

Direct buried HDPE pipe shall have 3-inch detectable metallic tape of the proper color placed directly above the pipe and 12-inch below finished grade or 6-inch detectable tape between 12-inch and 24" below finished grade.

Direct buried or horizontal directional drilled HDPE pipe shall also have tracer wire installed along the pipe alignment. The tracer wire to be used shall be a solid, 10-gauge, high strength, copper clad steel wire with a polyethylene jacket of appropriate color manufactured by Copperhead Industries or approved equal.

11.06 IDENTIFICATION

Pipe shall bear identification markings in accordance with AWWA C906.

Pipe shall be color coded blue for water, purple (Pantone 522 C) for reclaimed water or green for pressure sewer using a solid pipe color or embedded colored stripes. Where stripes are used, there shall be a minimum of three stripes equally spaced.

11.07 INSTALLING POLYETHYLENE PRESSURE PIPE AND FITTINGS

All polyethylene pressure pipe shall be installed by direct bury, directional bore, or a method approved by the City prior to construction. If directional bore is used, or if directed by the City, the entire area of construction shall be surrounded by silt barriers during construction.

11.08 INSPECTION AND TESTING

All pipelines shall remain undisturbed for 24 hours to develop complete strength at all joints. All pipelines shall be subjected to a hydrostatic pressure and leak test per the Specifications.

END OF SECTION

THIS PAGE INTENTIONALLY LEFT BLANK

SECTION 12 - PRESSURE PIPE CONSTRUCTION

12.01 GENERAL

The Work in this section includes construction of potable water mains, reclaimed water mains, sanitary force mains, and appurtenances.

Pressure pipelines are to be constructed at locations shown on the Contract Drawings. The City reserves the right to make minor changes in grade and/or alignments as the Work progresses.

Piping materials for pressure pipe installations shall be as follows:

Potable Water Main		
PVC Pipe	2-inch	
DI Pipe	6-inch and larger	
HDPE Pipe	2-inch and larger	ASTM D3350 meeting PE 3408 code designation
Galvanized Pipe	2-inch blow-off assemblies, 2-inch connections, 2-inch short tunneling, and 2-inch short relocations	
Fittings	2-inch PVC pipe:	PVC with gasketed joint
	2-inch galvanized pipe	Galvanized steel with threaded joint
	6-inch and larger pipe	Ductile Iron (DI) with push-on or mechanical joint

Sanitary Force Main		
PVC Pipe	4-inch through 36-inch:	ANSI/AWWA C900-16
DI Pipe	14-inch and larger pipe:	ANSI/AWWA C151
HDPE Pipe	2-inch and larger	ASTM D3350 meeting PE 3408 code designation
PVC Fittings	4-inch through 48-inch pipe:	DI with push-on or mechanical joint
DI Fittings	4-inch and larger pipe:	DI with push-on or mechanical joint
HDPE Fittings	2-inch and larger pipe:	ASTM D3350 meeting PE4710 code designation or DI with HDPE mechanical joint adapter

All existing water services shall be kept in service during the construction of water mains and the preparation of new service connections. Water meters requiring disconnection by the Contractor to accomplish the Work shall be promptly restored to service by the Contractor. The Contractor shall give a minimum of 24 hours prior written notice to all affected water customers of the intended service interruption.

The Contractor's attention is called to the fact that the existing sewer system must be kept in operation at all times. Where connections are made to existing mains or other shutdowns are necessary, permission must be obtained and arrangements must be made with the Utilities

Department for removing from service those mains that will be affected. Shutdowns must be held to a minimum in both number and duration. Bypass pumping and hauling operations may be required to interrupt service.

No valve or other control device on the existing system shall be operated by the Contractor without first obtaining approval from the Utilities Department. The Contractor shall, at least forty-eight (48) hours in advance, notify citizens subject to interruption of service by means of door hangers or any other approved method of the starting time and duration of such interruption.

All pipe, fittings, and appurtenances shall be furnished by the Contractor and be transported, delivered, and installed by the Contractor in accordance with the requirements of the subsection headed "Laying and Jointing Pipelines."

All pipelines shall be tested in accordance with the requirements of the subsection headed "Testing and Disinfection of Pressure Pipelines: Pressure Test."

All potable water and reclaimed water pipelines shall be disinfected before they are put into service as specified in the subsection headed "Testing and Disinfection of Pressure Pipelines: Disinfection."

As-built drawings shall be submitted to the Engineer prior to acceptance of the Work and prior to commencement of the warranty period.

Standards referenced in this Section are the latest revision of the following specifications:

ANSI/AWWA C105	"Polyethylene Encasement for Ductile-Iron Piping for Water and Other Liquids"
ANSI/AWWA C110	"Ductile-Iron and Gray-Iron Fittings, 3-Inch through 48-Inch
ANSI/AWWA C111	"Rubber-Gasket Joints for Ductile-Iron Pressure Pipe and Fittings"
ANSI/AWWA C504	"Rubber-Seated Butterfly Valves"
ANSI/AWWA C509	"Resilient-Seated Gate Valves for Water and Sewerage Systems"
ANSI/AWWA C515	“Reduced Wall, Resilient-Seated Gate Valves for Water Supply Service”
ANSI/AWWA C550	"Protective Epoxy Interior Coating for Valves and Hydrants"
ANSI/AWWA C600	"Installation of Ductile-Iron Water Mains and Their Appurtenances"
ANSI/AWWA C605	"Underground Installation of PVC Pressure Pipe and Fittings for Water"
ANSI/AWWA C651	"Disinfecting Water Mains"
ANSI/AWWA C800	"Underground Service Line Valves and Fittings"

ANSI/AWWA C900-16	"Polyvinyl Chloride (PVC) Pressure Pipe and Fabricated Fittings, 4 In. Through 60 In."
ANSI/AWWA C901	"Polyethylene (PE) Pressure Pipe and Tubing, 1/2-Inch through 3-Inch for Water Service"
ANSI/AWWA C906	"Polyvinyl Chloride (PVC) Pressure Pipe and Fittings 4-Inch through 63-Inch, for Water Distribution and Transmission"
ANSI/AWWA C901	"Polyethylene (PE) Pressure Pipe and Tubing, 1/2-Inch through 3-Inch for Water Service"
ASTM A 126	“Specification for Gray Iron Castings for Valves, Flanges, and Pipe Fittings”
ASTM D 429	"Test Methods for Rubber Property - Adhesion to Rigid Substrates"
ASTM D 3139	"Standard Specification for Joints for Plastic Pressure Pipes using Flexible Elastomeric Seals"

12.02 DATA TO BE SUBMITTED

The Contractor shall submit shop drawings in accordance with the Specifications.

Pipe
Valves
Joints and joint accessories
Fittings
Specials and accessories
Special linings and coatings
Water service materials

12.03 MATERIALS

All pressure pipe materials shall be in accordance with the applicable requirements of the Technical Specifications sections headed:

DIP “Piping Materials: Ductile Iron Pipe and Fittings”
PVC “Piping Materials: PVC Pressure Pipe”
HDPE “Piping Materials: HDPE Pressure Pipe”

All pressure pipe materials (pipe, fittings, valves, valve boxes, tapping valves and sleeves, precast thrust blocks, blow-offs, house services, etc.) except fire hydrants, shall be furnished by the Contractor. All pressure pipe fittings and valves shall be cast and manufactured in the United States of America unless complete certification is furnished in accordance with ANSI/AWWA C110.

All materials furnished shall be new. Materials not specified herein or on the Contract Drawings

shall conform to AWWA Standards and Industry Standards.

Piping, concrete, masonry, and all other materials shall conform to those materials as specified in the appropriate Technical Specifications sections for those materials. Specific pressure pipe and appurtenances materials shall conform to the following specifications:

All materials found during the progress of work to have flaws, cracks, or other defects will be rejected by the Engineer regardless of whether or not it has been installed and shall be replaced by and at the expense of the Contractor.

Materials shall not be stacked or placed under materials in such a manner that damage could result. Slings, hooks, or tongs used for lifting shall be padded in such a manner as to prevent damage to exterior surfaces, interior linings and components. If any part of the coating, lining or components is damaged, the repairs or replacement shall be made by the Contractor at his expense and in a manner satisfactory to the Engineer prior to attempting installation. In the event that materials supplied by the City are defective, the Contractor shall notify the Engineer immediately so arrangements can be made for replacing such devices.

12.03.01 2-INCH DIAMETER PIPE

1. Steel pipe shall be standard galvanized steel, Schedule 40, furnished in 21-foot lengths with both ends threaded.

2. All 2-inch steel fittings shall have screw type joints.

3. Pipe thread compound shall not be used. Threads shall be wrapped with teflon joint tape, non-hardening, Mil. Spec. T27730A. Cutting oils shall be dark, non-toxic, and equal to cutting oil manufactured by the Rigid Tool Company. The Contractor shall take caution not to allow cutting oil inside the pipe and shall remove all cuttings. Cutting oils shall be UL listed or NSF approved for use in potable water systems.

4. PVC pressure pipe to be used in the potable water system shall be Safety Blue in color or white with Safety Blue identification tape or color coded approved ink lettering as specified. PVC pressure pipe to be used in the reclaimed water system shall be Safety Purple in color or white with Safety Purple identification tape or approved color-coded ink lettering as specified.

   PVC pipe shall conform to the Technical Specifications section headed "Piping Materials - PVC Pressure Pipe."

5. HDPE pressure pipe shall conform to the Technical Specifications section headed, “Piping Materials – HDPE Pressure Pipe.”

12.03.02 VALVES - GENERAL

1. Valves shall be iron body, bronze mounted, and have joint ends as shown or specified. Valves shall have O-ring seals, unless otherwise specified.

2. A standard 2-inch square AWWA operating nut shall be provided on each valve. Valves shall have non-rising stems and shall open when the nut is turned counterclockwise. Each nut shall be marked with an arrow.

3. All valves of the same type shall be from the same manufacturer. Parts of valves of the same type and size shall be interchangeable. Unless otherwise specified, all valves shall be designed for a cold water working pressure of 150 psi.

4. All valves shall be furnished complete with gaskets, bolts, nuts, and glands necessary for installation.

5. All valves larger than 2-inch shall have restrained rubber gasketed compression joints, or mechanical joints with retainer glands, conforming to ANSI/AWWA C111, at the Contractor's option unless otherwise noted.

6. Valves used for sanitary force mains shall be the same as those used in other pressure pipe applications, unless otherwise specified.

7. Upon request, the valve manufacturer shall provide an affidavit of compliance, proof of design testing, and proof of production testing.

12.04 CONNECTIONS TO EXISTING MAINS

The Contractor shall connect the new pressure pipelines to the existing pressure pipelines at locations as shown on the Contract Drawings and as specified. The Engineer shall be notified at least 2 working days prior to making connections. The time at which the connections are to be made and the manner of making the connections shall be subject to review and acceptance by the Engineer.

The connections to the existing pressure pipeline shall be made to minimize the time during which the existing pressure pipeline will be out of service. The Contractor shall utilize the necessary number of crews and types of equipment and shall work the necessary hours to ensure completion of the connections within the time specified.

12.05 CONSTRUCTION OPERATIONS

Pressure pipelines shall be installed in open trenches, except when another method, such as jacking, boring, or tunneling, is shown on the Contract Drawings, specified, or ordered. Jetting shall not be allowed under roadway, alley, or driveway. All mains shall be laid and maintained at the required lines and grades with fittings, valves and appurtenances at the described locations. All pipe shall be laid to the depth as shown on the Plans, or when a depth is not indicated, with a minimum cover of thirty-six (36) inches outside of the roadway, and forty-two (42) inches under the roadway. Grade lines shall be set by the Contractor. The tolerance of such grades shall not be more than that specified on the drawings. When no tolerance is indicated a tolerance of 0.5 foot shall be used. All other realignments must be approved by the Engineer. The Contractor shall have suitable survey equipment on the site at all times.

All joints, fittings and other appurtenances shall not be covered until inspected by the City Inspector.

Non-compliance will require excavation of all joints and fittings

Pipe and fittings shall not be strung in residential areas more than 3 weeks in advance of pipelaying, unless otherwise approved by the Engineer. The Contractor shall install pipelines, pressure test, disinfect, and restore the ground surface in pipeline segments of 3,500 linear feet or less, except as otherwise approved by the Engineer. The new segment of pipelaying shall not start until restoration has commenced on the previous segment, or as approved by the Engineer.

Pipeline segments shall be pressure tested and disinfected after pipelaying is complete, to minimize inconvenience to the Public, except as otherwise approved by the Engineer.

No excavation shall be left open over a weekend. All pavement openings shall be completely repaired as specified in the Technical Specifications section headed "Surface Restoration" within 7 days of opening, or a temporary asphaltic pavement patch placed and maintained daily.

Where shown on the Contract Drawings or where directed by the Engineer, the Contractor shall remove existing pipelines which are shown to be abandoned. Any such pipe, fitting, etc., shall be removed after the new pipeline (replacing the existing line) is accepted and put into service by the City. Removed pipe and appurtenances 6 inches or larger which are described elsewhere or deemed by the Engineer to be reusable shall be delivered to the City by the Contractor. All material not deemed reusable shall become the Contractor's property and shall be removed from the site by the Contractor. No additional payment will be made for salvaging pipe and fittings.

In general, pipe six inches and smaller abandoned within City rights-of-way shall be capped at both ends and abandoned in place. Grouting is not required unless specifically required by the Engineer or the City. Abandoned pipes eight inches and larger shall be filled with grout or flowable fill unless otherwise directed by the City or the Engineer. Pipe abandoned in rights-of-way owned by municipalities other than the City shall be subject to the requirements of the agency having jurisdiction. All pipes shall be abandoned in a manner which results in the abandoned pipeline not being pressurized.

Short tunneling of pressure pipe shall be constructed as required to protect trees, shrubs, and existing surface or subsurface utilities and structures. Short tunnels shall be constructed to the lengths shown on the Contract Drawings, specified, or directed by the Engineer. The Contractor will be allowed to utilize an auger machine and to push or pull the carrier pipe into the bore without the need of a casing. The Contractor shall install the pipe within the bore hole on a line and grade to allow connection to open cut piping adjacent to the bore hole within pipe jointing alignment limits defined for the pipe in question. The completed installation shall not result in settlement of soil under the obstacle.

Existing fences shall be restored by the Contractor and shall be finished and installed so that the restoration is equal to or better than the original. Only those portions of original fencing or materials there from, that the Engineer approves for re-use, shall be used by the Contractor in fence restoration. All other materials, including lumber, paint, wood preservative, concrete, and metal products shall be furnished by the Contractor.

The cost of protecting, replacing, relocating, and maintaining (including using hay bales) storm and sanitary sewerage facilities shall be included in the various unit price Pay Items, and no separate

payment will be made therefore unless otherwise specified in other Pay Items.

12.06 LAYING AND JOINTING PRESSURE PIPELINES

All pressure pipeline installation shall comply with applicable standards of ANSI/AWWA C600, C605, and C906, and with these Specifications.

Mechanical joint fittings and valves installed in sections of unrestrained pipe, and in blow-offs, shall be installed using ductile iron retainer glands, as set forth in the Technical Specifications section headed "Piping Materials: Ductile Iron Pipe."

PVC push-on fittings for pressure pipelines shall conform to the Technical Specifications section headed "Piping Materials: PVC Pressure Pipe."

Laying and jointing of HDPE pressure pipe shall conform to the Technical Specifications section headed “Piping Materials: HDPE Pressure Pipe.”

Excavation and backfill shall conform to the Technical Specifications section headed "Excavation and Backfill."

In lieu of jacking and boring or pushing of pipe up to 4-inch in diameter, the Contractor may use a soft bore directional drilling process as provided by Flow Mole Corporation or approved equal.

Cover for all pressure pipeline Work, if not shown on the Contract Drawings, shall be not less than:

	2-inch and 4-inch	6-inch and larger
Under roadways and alleys:	36 inches	42 inches
Under grass and sidewalks:	24 inches	36 inches

Unless otherwise noted on the Contract Drawings or in other sections of this Specification, the pressure pipeline shall be handled and installed in strict accordance with the manufacturer's instructions and with the applicable AWWA Standards. If a conflict exists between the manufacturer's instructions and the AWWA Standards, the manufacturer's instructions shall govern.

Prior to installation, all pipe shall be inspected for defects and all lump or excess coatings shall be removed. The inside of the bell and outside of the spigot shall be cleaned prior to joining of all pipe. Caution shall be taken to prevent damage to the pipe during lowering into the trench.

Any defective material shall be removed from the job site immediately. Should a defect be discovered after the item has been placed in the trench, the replacement will be at the Contractor's expense. Materials shall be stored along installation routes in a manner acceptable to the Engineer or as described elsewhere in the Specifications.

Polyethylene wrapping shall be installed on ductile iron pipe and appurtenances where shown on the Contract Drawings or where ordered by the Engineer.

Polyethylene encasement materials and installation shall meet the applicable requirements of ANSI/AWWA C105. Care shall be taken while backfilling to prevent puncturing, tearing, or otherwise damaging the polyethylene wrapping.

The Contractor shall use every precaution during construction to protect the pressure pipeline against the entry of non-potable water, dirt, wood, small animals, and any other foreign material that would hinder or contaminate the operation of the pipeline. Where the groundwater elevation is above the bottom of the trench, the Contractor shall provide suitable dewatering equipment.

All dewatering shall meet the requirements set forth in the Technical Specifications section headed "Excavation and Backfill."

Watertight plugs of an approved type shall be installed in the ends of all pipe, fittings, and valves during 24-hour or longer periods when installation is not in progress, or as required to prevent ditch water, sand, etc. from entering the pipe. Standard plugs shall be inserted into all dead end pipes, tees or crosses; spigot ends shall be capped; flanged ends shall have blind flanges, or sheet metal or plywood caps. Plugs installed for pressure testing shall be fully secured and restrained to withstand the test pressure.

Where plugging is required because of Contract division or phasing for later connection, the ends of such lines shall be equipped with a permanent type cast iron or ductile iron plug/cap or blind flange with or without a blowoff cock, as shown on the Drawings. Installation or removal of such plugging shall be considered incidental to the work and no payment shall be expected for this work by the Contractor.

Concrete thrust blocks of the proper size and type shall be furnished and installed at all locations where a change in the pipe alignment exceeds 7 degrees or dead ends, unless Contract Drawings show that adjacent pipe, in excess of 2 bells each direction, shall be restrained. Concrete thrust blocks used on 12-inch and larger mains shall be poured in place. Precast thrust blocks may be used on mains less than 12-inch in diameter. Thrust block concrete shall conform to the Technical Specifications section headed "Concrete, Masonry, and Reinforcing Steel."

Boring, soft boring, and jacking work other than new services shall strictly conform to all applicable stipulations of the State of Florida Department of Transportation Utility Accommodation Manual, unless otherwise specified. Softbore shall utilize a guided boring system, equal to FlowMole or DirectLine.

12.06.01 Expose Existing Pressure Pipeline and Record Elevation

The Contractor shall expose the existing pressure pipelines prior to the construction stake-out to determine the station, offset, and elevation, before actual construction begins. The Contract Drawings may be modified by the Engineer, as necessary, to accommodate the pressure pipelines which must remain.

12.06.02 Conflict Adjustment of Existing Pressure Pipelines

In some locations existing pressure pipelines intended to remain in service may need to be adjusted horizontally or vertically to avoid conflicts with the proposed storm drains, sanitary

sewers, roadway base, manholes, inlets, or other proposed improvements. The conflict may not be shown on the Contract Drawings.

In the event that a conflict is encountered and confirmed by the Engineer, the adjustment to alleviate the conflict shall be constructed in accordance with the applicable "Obstruction Detail" or as ordered by the Engineer.

12.06.03 Pipe Joints

1. **Standard Mechanical Joints**: In making mechanical joints, the pipe shall be centered in the bells. The surfaces of ductile iron pipe with which the rubber gasket comes in contact shall be thoroughly brushed with a wire brush just prior to assembly of the joint. The surfaces of PVC pipe shall be wiped clean with a cloth and soapy water. A pipe lubricant shall be brushed over the gasket just prior to installation. The gasket and gland shall be placed in position, the bolts inserted, and the nuts tightened finger tight. The nuts shall be tightened by means of a torque wrench, or as approved by the City, in such a manner that the gland shall be brought up evenly into the joint. The following range of bolt torques shall be applied:

Bolt Size (inch dia.)	Range of Torque (foot lbs.)
5/8	45 - 60
3/4	75 - 90
1	70 - 100

   If effective sealing is not obtained at a maximum torque listed above, the joint shall be disassembled and reassembled after thorough cleaning.

2. **DI Pipe Push-On Joints**: In making up the push-on rubber gasket joint, the gasket seat in the socket shall be thoroughly brushed with a wire brush and the gasket shall be wiped with a clean cloth. The gasket shall be placed in the socket with the large round end entering first so that the groove fits over the bend in the seat. A thin film of approved lubricant shall then be applied to the inside surface of the gasket that will come in contact with the entering pipe. The plain end of the pipe to be entered shall be thoroughly brushed with a wire brush and placed in alignment with the bell of the pipe to which it is to be joined. Ends of cut pipe shall be ground to a smooth bevel edge before inserting in bell. The joint shall be made up by exerting sufficient force on the entering pipe so that its plain end is moved past the gasket until it makes contact with the base of the socket.

   Backhoe buckets or excavation equipment are not to be applied directly to the pipe.

3. **PVC Pipe Push-On Joints**: Procedures for the making of PVC pipe push-on joints shall be similar in nature to those set forth in the preceding paragraph (except the bell shall be wiped with a clean cloth). Procedures shall strictly follow the manufacturer's printed instruction for the making of joints. In a like manner, all other PVC pipeline Work shall be performed in accordance with the manufacturer's recommendations.

4. **Restrained Joints**: Ductile iron mechanical joint pipe, fittings, and valves 12-inch and smaller that require restraint shall be installed using ductile iron retainer glands, as specified. The glands shall be installed in accordance with the manufacturer's recommendations. Glands using a frangible bolt for setting the restraining devices shall be tightened with standard wrenches.

   Glands using standard bolts for setting the restraining devices shall be tightened with a torque wrench. The assembly shall be given 2 heavy coats of a bituminous coating after installation.

   Restrained push-on joint pipe, fittings, and valves, where shown on the Contract Drawings, shall be with a restraining gland or restraining gasket, as specified.

   Pipe, fittings, and valve joints shall be restrained at locations shown on the Contract Drawings, or as specified. In addition, all other fittings and valves shall be installed using a ductile iron retainer gland.

   The following shall apply to various restrained joint/pipe size type:

Pipe Size (Inches)	Restrained Joint Type
2	No restrained joint allowed
4 through 12	Mechanical joint/retainer glands Tyton Pipe/Loc Fast Gasket, or equal
16 and larger	Mechanical joint/retainer glands TR Flex, or equal, pipe valves and fittings

12.06.04 Color Coding

Prior to backfilling, all pressure pipelines shall be identified with color coding. The applicable color codes, with light color stabilant, are:

Pipe Use	Color Coding
Potable Water	Safety Blue
Sanitary Sewer	Safety Green
Reclaimed Water	Safety Purple

1. **Coding on the Pipe**: HDPE and PVC pipe shall be colored at the point of manufacture. If black or white pipe must be used, pipe shall have City approved color coded ink lettering stamped on the pipe or shall be continuously taped with plastic adhesive tape using the color coding as stated above. Plastic adhesive tape shall be applied as follows:

   Black and white 2-inch and 4-inch pipe -- continuously taped at top center.

   Black and white 6-inch and larger pipe -- continuously taped at "10, 12, and 2 o'clock."

   Ductile iron pipe shall be continuously painted along the top one-third of the pipe with a 2-part high build epoxy-polyamide paint or approved equal. The paint shall be dry prior to the pipe being installed.

Ductile iron pipe wrapped in color coded polyethylene wrapping is not required to be painted.

2. **Coding above the Pipe**: Pipe shall have 3-inch detectable metallic tape of the proper color placed directly above the pipe and 12-inch below finished grade or 6-inch detectable tape between 12-inch and 24-inch below finished grade.

12.06.05 Valves and Valve Boxes

Valves shall be installed in a closed position, free from all distortion and strain, and left in satisfactory operating condition. Valves shall be tested in place by the Contractor, as far as practicable, and any defects in valves or connections shall be corrected to the satisfaction of the Engineer.

Tapping sleeves shall be pressure tested prior to making the tap.

Valve boxes with stay-put cover shall be vertical and concentric with the valve stem. Any valve box which is moved from its original position, preventing the operation of the valve stem, shall be satisfactorily reset by the Contractor at his expense.

Please see the Specifications for additional information for Valves.

12.06.06 Connections (Tie-ins) and Shutdowns

The Contractor shall furnish all labor and equipment necessary for the connection of approved pipelines to the existing system and the shutdown, removal or disconnection and plugging of existing pipelines as indicated on the Contract Drawings or as directed by the Engineer.

This may be required in instances where existing pipelines are to be abandoned or where a short segment of existing pipeline must be cut out and adjusted either vertically or horizontally to avoid a conflict with a proposed storm drain or storm drain structure, sanitary sewer, or other proposed improvement.

The Contractor shall make all taps and tie-ins required, under the direct observation of the Engineer.

12.07 PIPELINE CLEANING

All mains shall be pigged, cleaned and flushed to remove all sand and other foreign matter if required by the City and Engineer. The Contractor shall be responsible for developing a pigging and flushing plan to be submitted to the Engineer for approval prior to pigging and flushing. The Contractor shall dispose of all water used pigging and for flushing without causing a nuisance or property damage, in accordance with state and local requirements. Any permits or fees required for the disposal of flushing water shall be the responsibility of the Contractor.

Flushing water used by the Contractor shall be taken from an approved metered source. The water utility will provide the meter and designate the source. Potable and reclaimed flushing water shall be at the Contractor’s expense. Reclaimed water should be used for sanitary force mains and potable

water can be used for all service types.

The cleaning of the pipeline shall be done by the controlled and pressurized passage of a polyurethane pig of varying dimensions, coatings and densities as determined by the City through the piping system.

A series of pigs shall be entered into the system at a point as near to the beginning as is logistically and mechanically feasible.

A launching assembly shall be used as the entrance point for the pig. This assembly shall allow for the following:

1. The entering of pigs into the system by providing the means to induce flow from an external source, independent of the flows and pressures immediately available from the system, on the back of the pig to develop sufficient pressure to force the pig through the system.
2. A means to control and regulate the flow.
3. A means to monitor the flows and pressures.
4. A means to connect and disconnect from the system without any disruption to the operation of the system.

The pig shall be removed or discharged from the system at a point as near to the end as is logistically and mechanically feasible.

The contractor shall be responsible for the retrieval of the pig at the discharge point. This may include setting a trap that will not disrupt normal flow and operations but will capture the pig and any debris. A retrieval assembly may also be used but said assembly shall be able to connect and disconnect from the system without any disruption to the operation of the system.

Alternative launching and retrieval methods shall be done with the prior approval of the City.

Any pig that cannot progress through the piping system shall be located by the contractor and removed by excavation of the pipe to remove the blockage. All pipe repairs shall be the responsibility of the contractor and shall be performed with as little disruption to the system as possible.

Any increase in pressure that cannot be accounted for, i.e. fittings or valves or additional cleaning runs, shall be investigated, per the Engineers' review and acceptance, by locating the pig at the beginning of the increased pressure and excavating to determine the cause of the pressure increase. All pipe repairs shall be the responsibility of the contractor and shall be performed with as little disruption to the system as possible.

Final flushing of the cleansed lines shall be performed after the last successful run of the pig as determined by the City. The contractor shall be responsible for all applicable flushing and disinfection requirements for potable water lines.

The contractor shall maintain and provide a report at the end of the cleaning procedure containing the following:

1. The pressures in the pipe during the pigging procedure.
2. Any inline problems encountered during the procedure including all excavations with detailed locations, reason for the excavation and any corrective measures taken to the pipeline.
3. A record of the pigs used, their sizes, styles and other pertinent information regarding what materials were used during the cleaning.
4. An analysis of the condition of the pipeline before and after the cleaning procedure.

12.08 TESTING AND DISINFECTION OF PRESSURE PIPELINES

All new pressure pipelines shall be subjected to a water pressure test between valves. In order to expedite the restoration of certain surface facilities, it may be required that individual sections between valves be tested as soon as the valves are installed. Disinfection shall be accomplished after the pressure test requirements have been met for the entire segment of pressure pipe.

The Contractor shall furnish all labor, materials, equipment, and chemicals to perform the required pressure tests and disinfection. All testing and disinfection will be subject to City inspection. All new valves shall be operated by the Contractor. However, all tie-in valves to the existing water system shall only be operated with the approval of, and in the presence of, the City, and shall be scheduled to be performed during the standard work hours of City staff, unless otherwise approved by the Engineer.

All existing valves shall be operated by the City or by the Contractor under the direct supervision of the City.

Testing and disinfection of pressure pipelines shall be completed per Flushing, Testing, and Disinfection section.

12.09 SURFACE RESTORATION AND MISCELLANEOUS

All surfaces disturbed by the Contractor shall be restored to their original condition in conformance to the Technical Specifications sections headed "Surface Restoration".

Sanitary sewers and laterals which cross a new potable water pipeline with less than 18 inches clear vertical separation, shall be replaced with 20 linear feet of ductile iron pipe, PVC pressure pipe (ANSI/AWWA C900-16), or SDR26 gravity pipe centered on the new pipeline, or as ordered by the Engineer.

Sanitary sewers and/or laterals which conflict with the new pipeline or are damaged by pipeline construction shall be reconstructed with ductile iron pipe, PVC pressure pipe (ANSI/AWWA C900-16), or SDR26 gravity pipe, as ordered by the Engineer.

Each valve box in an unpaved area shall have an 18-inch by 18-inch by 4-inch concrete pad. Pad shall be 1 inch above grade, and sod shall be so placed to maintain this 1 inch.

END OF SECTION

THIS PAGE INTENTIONALLY LEFT BLANK

SECTION 13 - DIRECTIONAL BORING OF PIPE

13.01 GENERAL

A. All existing structures, water and sewer lines, storm drains, utilities, driveways, sidewalks, signs, mail boxes, fences, trees, landscaping, and any other improvement or facility in the construction area that the Contractor disturbs for his own construction purposes shall be replaced to original condition at no additional cost to the City.

B. For “Navigable Waters of the U.S.” reference 33 of the Code of Federal Regulations, Part 329.

C. For “Waters of the U.S.” reference 33 of the Code of Federal Regulations, Part 323.

D. For “Waters of the State” reference Section 62-301 of the Florida Administrative Code.

13.02 TESTING

A. In place soil compaction tests shall be performed by a qualified testing laboratory.

B. Compaction tests shall be taken at every excavation, except in the road crossings or road shoulders; tests are to be taken according to current FDOT Standards.

C. All pipe shall be tested in accordance with the appropriate material specifications.

D. Reference Standards: American Society for Testing and Materials (ASTM), D1557, Moisture-Density Relations of Soils Using 10-lb. Rammer and 18-in. Drop.

E. The density of soil in place shall be a minimum of 95 percent in accordance with ASTM test 1557-70T, Method A or C.

13.03 QUALIFICATIONS

A. Pipe Manufacturer: All pipe and fittings shall be furnished by a single manufacturer who is fully experienced, reputable and qualified in the manufacture of the items to be furnished.

B. Drilling Supervisor: The Contractor shall provide a competent boring specialist who shall remain on the project site during the entirety of the directional boring operation. This includes, but is not limited to, drilling fluid preparation, seaming, boring and pulling. The boring specialist shall have a minimum of five years of experience in supervising directional bores of similar nature, diameter, materials and lengths.

C. Pipe Fusion: All boring and fusing equipment shall be certified for operation. The Contractor responsible for thermal butt fusing pipe and fittings shall have manufacturer certification for performing such work or a minimum of five years of experience performing this type of work. If no certification is available, written documentation of the required work experience shall be submitted for review and acceptance.

D. Drilling Fluid Specialist: The personnel responsible for supervising the supply, mixing, monitoring fluid quality, pumping and re-circulation system proposed for the drilling fluid shall have a written certification issued by the Drilling Fluid manufacturer for performing such work or a minimum of five years of experience performing this type of work. If no certification is available, written documentation of the required work experience for the proposed personnel shall be submitted for review and acceptance.

13.04 SUBMITTALS

A. Detailed description including specifications and catalog cuts for:

1. Shop drawings and catalog data for all HDD equipment.
2. The pipe manufacturer's maximum degree of radial bending allowed for the pipe when full and when empty and pullback force recommended setting.
3. Steering and tracking devices including specific tracer wire.
4. Drilling fluids; the drilling fluid submittal shall include the ratio of mixture to water, including any additives, based on the Contractor's field observations prior to construction, knowledge and experience with drilling in similar conditions, and any soil data provided in the Contract Documents, which shall be verified by the fluid specialist.
5. Shop drawings for the breakaway swivel, including the method of setting the swivels' break point and set point to be used.
6. Shop drawings for sizing of the mandrel for pull through testing
7. Pipe assembly procedure, details of support devices, and staging area layout including methods to avoid interference with local streets, driveways, and sidewalks.
8. Details of pipe fusion procedures and copies of the fusion technician qualification certification or documentation.
9. Drilling fluid technician qualification certification or documentation

B. Bore Plan: For all contiguous piping installations over 300 feet in length or any installations for piping larger than 4" in diameter, the Contractor shall submit a Bore Plan that includes the following at least 21 days prior to beginning work:

1. Contact information and experience for the drilling fluid specialist.
2. The number of passes the bore will include to get the product pipe installed.
3. The pilot bore and all reaming bore sizes including the final pullback with the product pipe.
4. Drilling rod length in feet.
5. The pilot bore, pre-ream bores (if any) and pullback production rate in minutes per (drilling) rod to maintain adequate mud flow.
6. Details of the entry and exit pit locations along with entry and exit angles for the bore, drawn to scale, depicting the position of all required equipment, access points, existing facilities to remain in place, existing traffic lanes to be maintained in operation, office trailers and storage sites.
7. The method of fusing or joining pipe of adjacent bores to ensure that the joint is on grade with the installed pipe.

C. If the Contractor is planning on deviating from bid document Profile, then the Contractor is required to submit detailed calculations supporting the modifications. The calculations

shall consist of the following:

1. Predicted and allowable pulling loads and bending stress, and the minimum allowable bending radius (Provide an estimate of the pulling loads and bending stress at characteristic points along the drill path when the curvature of the drill path changes).
2. Calculations for safety factors against ring collapse of the pipe during pullback and confirm ring deflection is within limits.
3. Graphical representation of evaluation of frac-out risks, showing maximum allowable and minimum required pressures at all critical locations along the bore alignment. The calculations shall be conducted by or under the direct supervision of a Professional Engineer licensed in the State of Florida, who shall stamp and seal the calculations.
4. The deviation drawings shall include a HDD Profile, plan view and cross-section. The Contractor is also recommended to submit deviation drawings for larger bores for site layout plans (Rig and Product Pipe Layout site) and pipeline stringing area (rollers).

D. Bore Schedule: For all contiguous piping installations over 300 feet in length or any installations for piping larger than 4-inches in diameter, the Contractor shall submit a detailed schedule for the HDD installation at least fifteen days prior to mobilization. The detail schedule shall identify all major construction activities and durations, with beginning and completion dates shown. The detail schedule shall be updated at least every two weeks or more frequently, as directed by the Engineer, and shall include but not limited to the following items:

1. Pre-construction walk over and inspection
2. Regular Mobilization and set-up
3. Pilot bore
4. Pre-reaming and reaming
5. Layout and thermal butt fusing of pipe
6. Pressure Testing of pipe prior to pullback when practical or as directed by the Engineer.
7. Final reaming and pullback of product pipe.
8. Annulus grouting after installation (optional).
9. Mandrel/pig test to confirm deformations of product pipe are within allowable tolerances.
10. Cleanup, surface restoration, and demobilization.

F. Prepare a Frac-out and Surface Spill Contingency Plan. Submit the plan to the Engineer prior to construction. Submit a letter of intent signed by an authorized representative of Contractor, confirming that the plan will be followed. The contingency plan for inadvertent returns/hydrofracture shall address all potential pathways for release of drilling fluid, and shall address containment, cleanup, and mitigation measures as well as inspection and reporting procedures and points of contact for regulatory and permitting agencies. The Plan shall address releases to the ground surface and controlled releases at any relief wells installed by the Contractor. Describe the location, installation, monitoring, and abandonment procedures for any relief wells. Provide stand-by equipment on-site to recover fluids via vacuum. Describe equipment and procedures

to private residence yard areas to inspect for and clean up fluid releases.

G. The Contractor shall submit an as-built profile of the pilot bore within twenty-four (24) hours of completion of the pilot bore to the Engineer and City Representative. Contractor shall receive written review and acceptance from either party in order to continue with the proposed profile alignment.

H. Furnish a Bore Path Report to the City within seven days of the completion of each bore path. Data collected by the City Representative does not relieve the Contractor from the responsibility of recording his own data. Include the following in the report:

1. Location of project, project name and number
2. Name of person collecting data, including title, position and company name
3. Investigation site location (Contract plans station number or reference to a permanent structure within the project right-of-way)
4. Driller's Log & identification of the detection method used
5. Elevations and offset dimensions of installed pipe as referenced to the drawings
6. Data log of pullback force during product pipe installation
7. All failed bores. Include length of pipe left in place and explanation of failed installation.

13.05 MATERIALS

A. Incidental materials that may or may not be used to install the product depending on field requirements are not paid for separately and will be included in the cost of the installed product.

B. Drilling Fluids shall use a mixture of bentonite clay or other approved stabilizing agent mixed with potable water with a pH of 8.5 to 10.0 to create the drilling fluid for lubrication and soil stabilization. Vary the fluid viscosity to best fit the soil conditions encountered. Contractor shall have appropriate additives for drilling fluid available for different soil conditions that may be encountered. Do not use any other chemicals or polymer surfactants in the drilling fluid without written consent from the City. Certify to the City in writing that any chemicals to be added are environmentally safe and not harmful or corrosive to the product pipe.

C. For drilling operations that will be below waters of the State of Florida, only bentonite free drilling fluids shall be used. Acceptable products are BioMax, manufactured by M-I Swaco, Inc., P.O. Box 2216, Laurel, Mississippi 39440, Phone: (800) 731-7331 or Bio-Bore, manufactured by Baroid Drilling Fluids, Inc., P.O. Box 1675, Houston, Texas 77251, Phone: (731) 987-5900 or approved equal.

D. Identify the source of water for mixing the drilling fluid. Approvals and permits are required for obtaining water from such sources as streams, rivers, ponds or fire hydrants. Any water source used other than potable water may require a pH test.

E. Directional Drilling/Boring pipeline construction shall require the installation of minimum #10 AWG Copper Clad, Extra High Strength Steel tracer wire with minimum 1,150 lb.

break load, with a minimum 45 mil HDPE insulation thickness. Refer to the Specifications for tracer wire details.

F. Breakaway connectors shall be supplied by DCD Design & Manufacturing, Condux International, Inc. or approved equal.

13.06 SITE CONDITIONS

A. Carry out excavation for entry, exit, recovery pits, slurry sump pits, or any other excavation as specified in the Contract documents. Sump pits are required to contain drilling fluids if vacuum devices are not operated throughout the drilling operation, unless approved by the City.

B. Within 48 hours of completing installation of the boring product, clean the work site of all excess slurry or spoils. Take responsibility for the removal and final disposition of excess slurry or spoils. Ensure that the work site is restored to pre-construction conditions or as identified on the Contract Drawings.

C. Exposure of product pipe to sunlight shall be limited to 14 consecutive days unless approved by the City.

D. The pipe shall be supported at intervals along its length with rollers or Teflon pads to minimize frictional forces when being pulled, and to hold the pipe above the ground. Surface cuts or scratches greater than or equal to the maximum defect depth in 3.08 E are not acceptable.

13.07 DAMAGE RESTORATION & REMEDIATION

A. The Contractor shall take responsibility for restoration for any damage caused by heaving, settlement, separation of pavement, escaping drilling fluid (frac-out), or the directional drilling operation, at no cost to the City.

B. When required by the City, provide detailed Contract Drawings which show how damage to any roadway facility will be remedied. These details will become part of the Record Drawings Package. Remediation Plans must follow the same guidelines for development and presentation of the Record Drawings. When remediation plans are required, they must be approved by the City before any work proceeds.

C. For HDD operations that will be below waters of the State of Florida, the contractor shall be responsible for any damage caused by the drilling operation, including, but not limited to, fracturing of the channel bottom. Any State or Federal required environmental cleanup due to the release of drilling fluids into State waters shall be at the Contractor's expense. The Contractor may at his own expense increase the depth of his drilling operations upon the approval from the City.

13.08 QUALIFICATIONS FOR REJECTION OF DIRECTIONAL BORE

A. The City may reject any portion of the work that is deemed to be non-responsive to the Contract requirements or not in conformance with approved Contract Drawings and

submittals, and for other factors including the following:

1. Failed Bore: When there is any indication that the installed product has sustained damage, stop all work, notify the City and investigate damage. The City may require a pressure and / or mandrel test at no additional cost to the City and shall have a City representative present during the test. Perform all testing within 24 hours unless otherwise approved by the City. Furnish a copy of the test results and all bore logs to the City for review and acceptance. The City is allowed up to 5 working days to approve or determine if the product installation is not in compliance with the specifications.
2. Obstructions: If an obstruction is encountered during boring which prevents completion of the installation in accordance with the design location and specification, the pipe may be taken out of service and left in place at the discretion of the City.
3. Pull-back Failure: If the installed breakaway device should fail during pull back.
4. Loss of Drilling Fluids: If the drilling fluid is “lost” during the pull back of the product and cannot be regained within the required timeframe of the manufacturer or if more than a reasonable amount of fluid is used to fill an unknown void and flow cannot be regained. No pipe shall be pulled without visible flow of drilling fluid.
5. Test Failure: If the pipe shall fail a hydraulic pressure test or mandrel test as specified by the City.
6. Damaged Pipe: If at any time when the product is pulled back and any exposed areas have a greater than allowable “gouging” or visible marring of the pipe per the table in 3.08 G.
7. Alignment Tolerance Exceeded: If the vertical and horizontal limits are not within tolerances.
8. Defective Material: Any other defect in material or workmanship which would affect the quality, performance, or installation life of the installed pipeline.

B. Remediation: All rejected bores shall be at the Contractor’s expense to correct and provide a satisfactory installed product. The Contractor shall submit to the City a revised installation plan and procedure for review and acceptance before resuming work. The City may require non-compliant installations to be filled with excavatable flowable fill or to be completely removed at no additional cost to the City.

13.09 PRODUCT LOCATING AND TRACKING

A. The City recognizes walkover, wire line, and wire line with surface grid verification, or any other system as approved by the City, as the accepted methods of tracking directional bores. Use a locating and tracking system capable of ensuring that the proposed installation is installed as intended. The locating and tracking system must provide information on:

1. Clock and pitch information
2. Depth
3. Transmitter temperature
4. Battery status
5. Position (x,y)

6. Azimuth, where direct overhead readings (walkover) are not possible (i.e. sub aqueous)

B. Ensure proper calibration of all equipment before commencing directional drilling operation.

C. Prepare the Driller's Log. Take and record alignment readings or plot points such that elevations on top of and offset dimensions from the center of the product to a permanent fixed feature are provided. Such permanent fixed feature must have prior approval of the City. Provide elevations and dimensions at all bore alignment corrections (vertical and horizontal) with a minimum distance between points of 10 feet. Provide a sufficient number of elevations and offset distances to accurately plot the vertical and horizontal alignment of the installed product.

13.10 PRODUCT BORE HOLE DIAMETER

Minimize potential damage from soil displacement/settlement by limiting the ratio of the bore hole to the product size. The size of the back reamer bit or pilot bit, if no back reaming is required, will be limited relative to the product diameter to be installed as follows:

Table 2-1. Recommended Relationship between Product Diameter and Reamed Diameter

Product Diameter	Reamed Diameter
< 8"	Diameter of product + 4"
8" – 24"	Diameter of product x 1.5
> 24"	Diameter of product + 12"
*Horizontal Directional Drilling Good Practices Guidelines – HDD Consortium	

13.11 EQUIPMENT REQUIREMENTS

A. The HDD equipment selected by the Contractor shall be capable of drilling, steering, tracking, reaming and installing the pipeline through all the subsurface conditions that may be present at the site.

B. Match equipment to the size of pipe being installed. Obtain the City's review and acceptance for installations differing from the above chart. Ensure that the drill rod can meet the bend radius required for the proposed installation.

C. All HDD equipment shall have an electronic data logger to record pull back force during all pipe installations.

D. All HDD equipment that has the capability to exceed the maximum recommended pulling force shall have a breakaway swivel properly attached to the product pipe that will release if the pullback force exceeds the pipe manufacturer's recommended pulling force.

13.12 THRUST / PULLBACK REQUIREMENTS

The Contractor shall provide as part of the required working drawings submittal complete data regarding the operational and maximum thrust or pulling forces to be used for the initial drill head and back-reamer installations, and the final pull-back of the pipe. Gages or other measurement tools shall be used to monitor the forces being used.

13.13 INSTALLATION PROCESS

A. Contractor shall contact the City and Engineer at least forty-eight (48) hours before each of the following activities:
   1. The setup of a drill rig pit,
   2. The start of the pilot bore,
   3. The pull back of the product pipe. Upon completion of the pilot-hole phase of the operation, a complete set of as-built records shall be submitted in duplicate to the Engineer. These records shall include copies of the plan and profile drawing, as well as directional readings recorded during the drilling operation.

B. Ensure adequate removal of soil cuttings and stability of the bore hole by monitoring the drilling fluids such as the pumping rate, pressures, viscosity and density during the pilot bore, back reaming and pipe installation. Relief holes can be used as necessary to relieve excess pressure down hole. Obtain the City's review and acceptance of the location and all conditions necessary to construct relief holes to ensure the proper disposition of drilling fluids is maintained and unnecessary inconvenience is minimized to other facility users.

C. At all times during the pilot bore the Contractor shall provide and maintain a bore tracking system that is capable of accurately locating the position of the drill head in the x, y, and z axes. The Contractor shall record these data at least twice per drill pipe length or every fifteen (15) feet, whichever is more frequent.

   1. Contractor shall monitor and record x, y, and z coordinates relative to an established surface survey benchmark, from downhole survey data using downhole wireline system. "Tru-Tracker" energized surface grid, or equivalent, shall be installed and used to supplement the wireline system. The "Tru-Tracker" grid shall encompass the entire area of the bore including underwater across the water. Alternatively, the Contractor may propose fixed "TruTracker" grids on land outside the waterway, supplemented by moveable grids on floating templates that can be temporarily anchored and surveyed while drilling the pilot hole. The moveable template should be sufficiently large to encompass the active drilling area for a two hour drilling period and should be at least as wide as the maximum depth of the bore. The grids shall be surveyed to establish horizontal and vertical position to 0.1 feet accuracy. The data shall be continuously monitored and recorded at least twice per drill pipe length or every fifteen (15) feet, whichever is most frequent.

   2. Deviations between the recorded and design bore path shall be calculated and reported on the daily log. If the deviations exceed tolerances specified

elsewhere, such occurrences shall be reported immediately to the City and Engineer. The Contractor shall undertake all necessary measures to correct deviations and return to design line and grade.

3. Drilling fluid pressures and flow rates shall be continuously monitored and recorded by the Contractor. The pressures shall be monitored at the pump and within the annular space with a downhole pressure-sensing tool located within thirty (30) feet of the drilling head.

4. Maximum allowable drilling speeds shall be calculated by the Contractor for pilot boring and each reaming pass and shall not be exceeded for pilot boring or reaming passes. Measurements shall be taken every fifteen (15) feet.

5. The Contractor shall measure and record drilling fluid viscosity and density at least three times per shift with at least two hours between readings, using calibrated Marsh funnel and mud balance. These measurements shall be included in daily logs submitted to the Engineer. The Contractor shall document modifications to the drilling fluids, by noting the types and quantities of drilling fluid additives and the dates and times when introduced. The reason for the addition of drilling fluid additives or other modifications shall be documented and reported.

6. The Contractor shall measure and record the pH on a regular basis (three times per shift with at least two hours between readings) with pH strips, paper or a pH meter.

7. The drilling fluid report shall include desired mud properties including weight, viscosity in cP, yield point in lb/100 sf, measured mud weight, funnel viscosity, plastic viscosity, fluid loss, % solids, chlorides, and detailed log of type and quantity of bentonite and all additives.

8. The Contractor shall constantly monitor and record the circulating volume, particularly for the early detection of drilling fluid losses, or thinning, or the danger of borehole collapse. Ground upheavals can also be detected early from such differences, and necessary action can be implemented to prevent further damage.

9. The Contractor shall constantly monitor and record the solid (sand) content to assure there is no significant increase, which can diversely impact efficiency of the circulations system.

D. The Contractor shall determine the pull-back rate in order to allow the removal of soil cuttings without building excess down-hole pressure and to avoid local heaving, or spills. Contain excess drilling fluids at entry and exit points until they are recycled and separated from excavated materials or removed from the site or vacuumed during drilling operations. Ensure that entry and exit pits and storage tanks are of sufficient size to contain the expected return of drilling fluids and soil cuttings. The bored hole shall always be maintained full of drilling fluids for support of surfaces, and the fluid re-circulation equipment shall operate continuously until the pipe installation is completed

and accepted by the City.

E. Ensure that all drilling fluids are disposed of or recycled in a manner acceptable to the appropriate local, state, or federal regulatory agencies. When drilling in suspected contaminated ground, test the drilling fluid for contamination and appropriately dispose of it. Remove any excess material upon completion of the bore. If in the drilling process it becomes evident that the soil is contaminated, contact the City immediately. Do not continue drilling without the City's approval.

F. The timing of all boring processes is critical. Install a product into a bore hole within the same day that the pre-bore is completed to ensure necessary support exists. Once pullback operations have commenced, the operation shall continue without interruption until the pipe is completely pulled into the borehole.

G. All prepared pipe that is being used for installation shall be adequately supported off the ground along the entire length to avoid damaging of the material during pullback due to ground surface conditions. Surface cuts or scratches greater than or equal to the maximum defect depth are not acceptable.

Pipe Size In.	Max. Defect Depth In.
4	1/16
6	1/11
8	5/32
10	3/16
12	1/4
> 12	Per Pipe Manufacturer's Recommendations

H. The drilling fluid specialist shall remain on the project site during the entirety of the directional boring operation to ensure proper mixture and production of drilling fluids needed for the bore.

I. Upon successful completion of the pilot hole, the borehole shall be reamed to a minimum of 25 percent greater than the outside diameter of the pipe being installed.

J. For bores with more than two radii of curvature (entrance and exit), the borehole should be reamed up to 50 percent larger than the outside diameter of the carrier pipe. Prereaming may be necessary dependent on size of material to be pulled.

K. Additional passes for prereaming may be required for larger pipe. Incremental increases shall be used as needed until appropriate bore hole size has been achieved.

L. Prereaming must be accomplished with no product attached to the reamer head on all bore pipe 6-inches and larger. The bore product may be pulled back on final pass of prereaming upon prior approval from the City.

M. After reaming the borehole to the required diameter, the pipe shall be pulled through the hole. In front of the pipe shall be a breakaway swivel and barrel reamer to compact the borehole walls.

N. The Contractor shall not ream at a rate greater than the drilling equipment and drilling fluid system are designed to safely handle.

O. Install all piping such that their location can be readily determined by electronic designation (tracer wire) after installation.

1. For all pipe installations, externally attach two (2) tracer wires; to the top of product pipe and secure in place with duct tape or 10-mil thickness polyethylene pressure sensitive tape at every joint and at 5 foot intervals.

P. Connect any break in the conductor line before construction with an electrical clamp, or solder, and coat the connection with a rubber or plastic insulator to maintain the integrity of the connection from corrosion. Clamp connections must be made of brass or copper and of the butt end type with wires secured by compression. Soldered connections must be made by tight spiral winding of each wire around the other with a finished length minimum of 3 inches overlap. Tracking conductors must extend 2 feet beyond bore ends. Test conductors for continuity. Each conductor that passes must be identified as such by removing the last 6 inches of the sheath. No deductions are allowed for failed tracking conductors. Upon completion of the directional bore, the Contractor shall demonstrate to the City that the wire is continuous and unbroken through the entire run of the pipe by providing full signal conductivity (including splices) when energizing for the entire run in the presence of the City Representative. If the wire is broken, the Contractor shall repair or replace it at no additional cost to the City.

Q. The pilot bore shall follow the design path of the bore shown on the Drawings:

1. Horizontal and vertical deviations shall be less than plus or minus three feet from the design path centerline. The Contractor shall continuously monitor horizontal and vertical position and record the position at least twice per drill pipe length, or at fifteen (15) feet intervals, whichever is most frequent.
2. The radius of curvature shall not be less than that shown on the Drawings. The radius of curvature shall be calculated over the distance of three drill pipe sections. If design radius of curvature is exceeded, the Contractor shall re-drill the pilot hole at no extra cost to the contract.
3. The location of the entry and exit points shall be as shown on the Drawings. The Contractor shall be solely responsible for all work necessary to correct excessive deviations from line and grade, including re-drilling, redesigning connections, and acquiring additional easement, at no additional cost to the Owner and without schedule extension.

R. Inadvertent Returns (Frac-Outs) and planned returns (at relief wells):

1. Contractor shall be responsible for avoiding any impact to existing utilities, structures, facilities, pools, and waterways in the Project area during the drilling operation. If the drilling fluid starts leaking to the surface (other than at the entry and exit points or relief wells), or if fluid loss results in surface movement, Contractor shall cease drilling until fluid loss volumes can be brought under control to minimize any inadvertent returns in the Project area. In such event, notify Engineer immediately. The Contractor shall clean up any locations where

drilling fluid surfaces, including releases at relief well locations. Contractor shall pay particular attention to the potential of inadvertent returns washing out along existing utility crossings and shall have preventive measures in place to prevent these occurrences from happening. Contractor shall be fully responsible for all damages caused by the force main installation operations. The pilot bore shall be pre-reamed and reamed using equipment and methods submitted by the Contractor. The Contractor shall completely ream the borehole to the final diameter prior to pull back, when practical or as directed by the Engineer.

O. The Contractor shall perform hydrostatic water pressure test in accordance with the manufacturer's guidelines prior to product pipe pullback.

13.14 PIPELINE TESTING

A. Hydrostatic Testing
   1. Refer to Specifications for pipe material.

B. Mandrel Deflection Testing Process

   1. The deflection test for flexible pipe systems shall be performed by pulling a mandrel through the pipeline. The mandrel shall have a diameter equal to 80 percent of the inside diameter of the pipe system being tested. When the mandrel cannot be pulled through the pipeline the Contractor shall locate and correct the defect to the satisfaction of the City. After the defect is corrected and trench backfilled, the section of line shall then be retested to compliance.

   2. Deflection tests shall be performed not sooner than 24 hours after completion of the pipe pull-back. The Contractor shall take measures to ensure the pipe is clean as not to interfere with the mandrel test.

   3. The mandrel types that can be used are:

      a. a rigid, nonadjustable, odd number of legs (9 legs minimum), mandrel having an effective length not less than its nominal diameter; and to be fabricated of steel, fitted with pulling rings at each end, stamped or engraved on some segment other than a runner indicating the pipe material specification, nominal size and be furnished in a suitable carrying case labeled with the same data as stamped or engraved on the mandrel.

      b. If approved by the City, a smaller diameter piece of similar material that is approximately double the nominal diameter in length and meets the 80% reduction of the inside diameter of the pipe being tested. The pipe length may need to be adjusted to ensure the pipe section cannot become skewed and become lodged; this may cause the test to fail.

   4. The mandrel shall be pulled through the pipe by hand to ensure that maximum allowable deflections have not been exceeded or that "necking" has not occurred. Prior to use, the mandrel shall be inspected by City personnel. Use of an unapproved mandrel or a mandrel altered or modified after inspection will

invalidate the test. If the mandrel fails to pass, the pipe will be deemed over deflected or necked.

5. Over deflected or necked pipe shall be abandoned and reinstalled. The replaced pipe shall be tested for deflection not sooner than 24 hours after installation.

C. The following deficiencies in the flexible pipe system installation shall be corrected by the Contractor at no cost to the City:

1. Over deflections
2. Stretched or “Necked” Pipe
3. Damaged Pipe
4. Improper Pipe Welds
5. Infiltration Points
6. Debris in the line

D. The City will not accept a credit, maintenance bond, or any other form of compensation in lieu of corrective measures that may be required to correct any sections of flexible pipe system that are improperly installed or do not meet the requirements of these specifications. In addition, all corrective measures proposed by the Contractor shall be approved by the City. In addition, should repairs of the flexible pipe system be accomplished by the use of any unauthorized materials or procedure, the City will require replacement of those substandard portions or repairs made to conform to the requirements of these specifications.

END OF SECTION

THIS PAGE INTENTIONALLY LEFT BLANK

SECTION 14 - JACKING AND BORING

14.01 SCOPE OF WORK

The Contractor shall furnish all labor, equipment, materials and incidentals required to install road or railroad crossings as shown on the Contract Drawings and as specified herein.

The Contractor is responsible for verifying the location of all utilities in the ground before commencing the jack and bore operation. No compensation will be allowed for labor or materials for unused casing. The Contractor will be responsible for all damage incurred to roadways or utilities by his operation.

14.02 OPERATIONS IN THE CITY OF ST. PETE BEACH OR STATE OF FLORIDA PROPERTY

All work affecting The City of St. Pete Beach, Florida Department of Transportation (FDOT), any other governmental agency's right-of-way or facilities, or railroad right-of-way shall be carried out to the full satisfaction of the applicable Department's authorized representative. The Contractor shall be responsible to meet any and all requirements of the Department of Transportation, railroad, or other agency pertaining to the specific project and shall conduct all his work accordingly.

Prior to the start of the jacking operation, a detailed jacking plan shall be submitted to the City for review and acceptance. No work shall be permitted until the submittals are accepted.

Prior to construction, a minimum of three (3) working days written notice prior to start of the actual work shall be given to the City and to the FDOT or other applicable agency.

A Bore Path Report shall be submitted with in three (3) days of completion of the bore.

The Contractor shall install, maintain and leave in place any sheeting, underpinning, cribbing and other related items (other than that required for the jacking pits) to support any structures or facility on the right-of-way owned by either The City of St. Pete Beach, FDOT or other governmental agency or railroad entity. The Contractor, at his expense, may be directed by FDOT, other applicable agency, or the City, to leave sheeting in place.

The Contractor shall perform all necessary soil test borings to determine actual soil conditions and shall utilize the results of said borings to determine the procedures required for each jack and bore operation, including, but not limited to, the presence of rock and necessary dewatering requirements.

No wires, equipment, or other appurtenances shall be permitted to be placed across or pass across State property without the express written permission of FDOT’s authorized representative.

All equipment used by the Contractor on State property may be inspected by the State and shall not be used if it is deemed unsatisfactory by an authorized State representative. State

highways shall be kept free of obstructions at all times.

No blasting shall be permitted under or adjacent to any State highways.

The Contractor shall be responsible for all damages arising from his negligence or failure to comply with any State or The City of St. Pete Beach regulations or requirements or deviations from the Contract Documents.

All State highway crossings shall be performed and completed in a manner fully satisfactory to the Department of Transportation and The City of St. Pete Beach.

14.03 SHOP DRAWINGS

The Contractor shall furnish working drawings showing all fabrication and construction details for the jacked crossings.

14.04 SUBMITTALS

Contractor shall submit a Jacking Plan that includes the following:

1. Site layout plan for entry and exit pit locations, drawn to scale, depicting the position of all required equipment, access points, existing facilities to remain in place, existing traffic lanes to be maintained in operation, and storage sites.
2. Qualification information on jack/bore contractor.
3. Manufacturer's information on equipment to be used.
4. Methods and materials for retaining walls for jacking and receiving pits.
5. Bore Report that details final alignment, dimensions, and record documentation.

14.05 CASING PIPE

All casings shall be installed accurately to line and grade and shall meet all requirements of the prevailing rights-of-way holder. Casings shall be new and of domestic material and manufacture.

Pipe casing shall be welded steel conforming to the requirements of AWWA C200 and ASTM A-139,Grade B. The pipe shall be coated internally and externally with Tnemec 46H-413 Hi-Build Tneme-tar per manufacturer's recommendations.

Joints shall be full penetration butt welded in accordance with the requirements of AWWA C206. The joints shall be double groove welded with continuous circumferential welds and field lined and coated in accordance with AWWA C203.

All casings shall be in conformance with the specifications as shown on the plans and detail sheets.

14.06 CARRIER PIPE

All carrier pipe shall be Class 50 ductile iron pipe with joint restraints or fully restrained PVC pipe.

14.07 CASING SPACERS

The carrier pipe shall be installed in the casing on spacer skids. The supports shall be dimensioned to center the carrier pipe in the casing with a top clearance of one-half inch. The height of the supports and runners combined shall be sufficient to provide not less than three-quarter inch between the casing pipe and outside diameter of the carrier pipe joints.

Adequate casing spacers shall be provided to properly support the carrier pipe and maintain pipe deflection within the pipe manufacturer's requirements. In any case, not less than three spacers for each individual length of carrier pipe shall be provided.

For metallic casing spacers, bolts, nuts, and washers shall be 316 stainless steel. Shell shall be min. 14 gauge 304 stainless steel. Risers shall be min. 10 gauge 304 stainless steel.

For metallic casing spacers, each shell shall be lined with a min. thickness of 0.090" ribbed PVC/EPDM extrusion with a min. Durometer "A" 85-90 hardness.

For metallic casing spacers, each riser shall have runners (bearing surfaces) made of ultra-high molecular weight polyethylene (UHMWPE) or glass filled polymer plastic to provide abrasion resistance and a low coefficient of friction.

For nonmetallic casing spacers, the runners (bearing surfaces) shall be of a projection type. The projections shall be made of preformed sections of HDPE or virgin polypropylene and shall conform to ISO 9001:2000 for strength and quality. The casing spacers shall be sized in accordance to the manufacturer's recommendations.

14.08 TUNNEL LINER PLATES

Tunnel liner plates shall be asphalt coated galvanized steel plates. The Contractor shall submit plans signed and sealed by a registered Engineer in the State of Florida and written installation procedures with his request for approval.

14.09 CASING END SEALS

Contractor shall provide properly sized rubber end seals to completely close both openings on either side of the casing.

Ends seals shall be pull on (seamless) or wrap around with 316 stainless steel straps for securing to the carrier pipe and the casing.

The seals shall have min. thickness of 1/8 inch of specially compounded synthetic rubber.

14.10 CONSTRUCTION

The Contractor shall provide all labor, material, equipment and appurtenances required for jacking the casing pipe beneath the roadway or railroad tracks. The casing pipe shall be welded steel pipe and jacked in one continuous operation at the locations shown on the drawings. Once the operation starts, jacking shall not be discontinued. Proper alignment and elevation of the casing pipe shall be consistently maintained throughout the jacking operation. The casing pipe shall be installed by jacking and to the length shown on the plans.

The installation of the casing and boring at the head of the casing shall be one simultaneously. Track guides of sufficient length to carry the power unit and pipe installation shall be used, in order to maintain proper line and grade of the casing. Surplus and unsuitable excavated material shall be disposed of by the Contractor.

The Contractor shall shore the jacking pits with sheeting or such other materials as required. Sheeting shall be driven to a sufficient depth below the invert of the steel casing pipe to resist any pressure developed by the soil outside the jacking pit. Sheeting shall terminate not less than 3-feet, 6-inches above existing grade. The Contractor shall install adequate protective railing or temporary fences around the pits within the crossing right-of-way at all times during construction.

The sections of casing pipe shall be field welded in accordance with the applicable portions of AWWA C206 for field welded water pipe joints. Steel casing pipes shall receive one (1) internal and external coat of Tnemec 46H-413 Hi-Build Tneme-tar applied in accordance with manufacturer's recommendation.

All surfaces shall be smooth and uniform without bulges, dents, or warping of lengths, and only new pipe shall be used. Finished lengths of pipe shall be furnished with beveled cut ends to facilitate proper welding of transverse joints. The diameter and wall thickness of the pipe shown on the drawings is the minimum required and no extra compensation shall be claimed by the Contractor if a larger and thicker pipe is used. It will be the Contractor's responsibility in the event that the casing does buckle or collapse during these operations.

At the completion of the jacking operations, the Contractor shall be required to leave all sheeting in place. The top of the sheeting shall be cut off 36-inches below finished grade.

The Contractor shall be responsible for preventing voids outside the casing pipe. Should they occur, the Contractor may be directed to fill them with grout in a method approved by the City. The Contractor shall exercise care in the sleeve removal to prevent voids.

The Contractor shall be responsible for furnishing, installing and removing the thrust block or restraint which was employed in driving the sleeve forward. No additional payment for the jacking restraint shall be made other than the unit price for this item. The entire jacking operation shall be discussed and accepted by the City prior to commencing jack and bore operation. After completion, the backup structures shall be removed in part or whole to permit construction of the pipeline in the sleeve.

Tunneling for the installation of large carrier pipe may be substituted for jacking and boring

when approved by the Engineer.

14.11 INSTALLING CARRIER PIPE IN CASING PIPE

The Contractor shall install the carrier pipe in full conformity with the Contract Documents. The pipe shall be installed to the lines and grades required within the casing pipe and placed to the acceptance of the City. The carrier pipe shall be braced to the side and the top of the casing pipe to prevent flotation or motion.

A bulkhead or rubber end seals shall be placed at each end of the casing pipe to keep the surrounding soil and material from migrating into the voids of the casing pipe.

14.12 TESTING

The pipe shall be tested as provided in the Contract Documents.

END OF SECTION

THIS PAGE INTENTIONALLY LEFT BLANK

SECTION 15 - FLUSHING, TESTING AND DISINFECTION

15.01 SCOPE OF WORK

A. Flushing, Pressure Testing, and Disinfection of systems including, but not limited to, the pipelines shown in the Contract Documents.

B. Contractor shall furnish all necessary pumps, hoses, piping, fittings, meters, gauges, chemicals and labor to conduct specified testing.

C. Testing shall be repeated at the Contractor's expense until satisfactory results are achieved.

15.02 REFERENCES

A. AWWA C651 - Standard for Disinfecting Water Mains.

B. UNI-B-6 - Recommended Practice for Low-Pressure Air Testing of Installed Sewer Pipe

C. ASTM F1417 - Standard Test Method for Installation Acceptance of Plastic Gravity Sewer Lines Using Low-Pressure Air

D. AWWA C600 – Standards for Installation of Ductile-Iron Water Mains and Their Appurtenances.

E. AWWA C605 - Standard for Underground Installation of Polyvinyl Chloride (PVC) Pressure Pipe and Fittings for Water.

F. ASTM 2164 - Standard Practice for Field Leak Testing of Polyethylene (PE) and Crosslinked Polyethylene (PEX) Pressure Piping Systems Using Hydrostatic Pressure

15.03 SUBMITTALS

A. Test Reports: Indicate results comparative to specified requirements. Submit two (2) copies of test results to Engineer in accordance with Submittal specifications.

B. Final approval of the bacterial samples shall be received from the Florida Department of Environmental Protection prior to the time that the system is placed into operation. Sampling procedures shall be done in accordance with FDEP requirements.

C. Bacteriological sampling locations shall meet FDEP requirements and be taken where shown on the drawings and as directed by the Engineer at no additional cost to Owner. Costs for all bacteriological testing shall be borne by the Contractor.

15.04 QUALITY ASSURANCE

A. Perform Work in accordance with these specifications, applicable utility provider standards, and the applicable reference standards listed in Section 1.03 above.

15.05 REGULATORY REQUIREMENTS

A. Conform to applicable FDEP requirements for performing the work of this Section.

15.06 DISINFECTION CHEMICALS

A. Chemicals: The disinfecting agent shall be sodium hypochlorite solution ANSI/AWWA B303 or liquid chlorine ANSI/AWWA B301. Dry hypochlorite, similar to "HTH" or equal may also be used as the disinfecting agent. Bleach or Clorox is not acceptable.

15.07 FLUSHING AND PRESSURE TESTING - PIPING

The Contractor shall furnish and install suitable temporary testing plugs or caps for the water lines, all necessary pressure pumps, hose, pipe connections, meters, gauges and other similar equipment, and all labor required, all without additional compensation for conducting pressure and leakage tests and flushing of the new water lines. Flushing and pressure testing shall be conducted in the following order:

A. After all piping lines have been installed and before pressure testing and final connections to equipment, each run of pipe shall be thoroughly flushed so as to remove all debris and foreign matter from the piping and equipment. Clean and flush all piping using potable water. Cleaning and Flushing shall be achieved by pigging with two (2) polyurethane foam pigs as manufactured by Girard Poly-Pig Inc. or "an approved equal". For watermain installation, the Contractor must ensure that there will be no contaminated water re-entering the main where the pig is flushed out, or it will be re-pigged at the Contractor's expense. Each pig will run through the line prior to running the second pig. On short runs (100 feet or less), or small lines (less than 4"), cleaning shall be accomplished by flushing with a minimum velocity of 2.5 feet per second. Contractor shall furnish and install required pig launch and exit assemblies. Non-abrasive pigs shall be employed. Flushed water may be discharged to the closest public catch basins and be coordinated with the City. Contractor to provide means of discharging water to catch basins at Contractor's expense.

B. Pressure and leakage tests shall be conducted in the presence of the Engineer, or his representative. All pressure mains, fittings, water services, and appurtenances shall undergo pressure and leakage tests. The Contractor will provide all necessary apparatus including a suitable pressure gage, pump, measuring device, piping connections and fittings and the necessary labor to conduct the test. Leakage is defined as the quantity of water added to the pipe being tested during the test period. The Contractor shall submit to the Engineer the testing pattern he proposes to follow prior to testing for the Engineer's approval. The Contractor shall not test more than 1,500 feet of pipe in a single test without approval from the Engineer.

C. In preparation for pressure testing the following parameters must be followed:

1. All air must be vented from the pipeline prior to pressurization. This may be accomplished with the use of the air relief valves or corporation stop valves, vent piping in the testing hardware or end caps, or any other method which adequately allows air to escape the pipeline at all high points. Venting may also be

accomplished by 'flushing' the pipeline in accordance with the parameters and procedures as described in AWWA C600/C605.

2. The pipeline must be fully restrained prior to pressurization. This includes complete installation of all mechanical restraints per the restraint manufacturer's guidelines, whether permanent or temporary to the final installation. This also includes the installation and curing of any and all required thrust blocking. All appurtenances included in the pressure test, including valves, blow-offs, and air-relief valves shall be checked for proper installation and restraint prior to beginning the test.
3. Temporary pipeline alignments that are being tested, such as those that are partially installed in their permanent location shall be configured to minimize the amount of potentially trapped air in the pipeline.

15.07.01 PRESSURE TESTING DUCTILE IRON AND PVC PIPING SYSTEMS:

1. The test pressure for piping constructed of ductile iron and PVC pipe shall be a minimum of 150 psi and this pressure shall be maintained for a period of not less than two hours. Tests shall be made between valves and as far as practicable and as approved by the Engineer. Potable water from the distribution system shall be used. Pressure shall not vary more than five (5) psi for piping during the test periods or as approved by the Engineer. Additionally, allowable leakage shall be computed on the basis of AWWA C-600, C-605 where practical.
2. All leaks evident at the surface shall be uncovered and repaired regardless of the total leakage as indicated by the test, and all pipes, valves and fittings and other materials found defective under the test shall be removed and replaced at the Contractor's expense. Tests shall be repeated until leakage has been reduced below the allowable amount.
3. Should, in the judgment of the Engineer, it not be practical to follow the foregoing procedures exactly for any reason, modifications in the procedure shall be made as approved by the Engineer and the City.

15.07.02 PRESSURE TESTING HDPE PIPING SYSTEMS:

1. The HDPE pipe installed by the directional drill method shall be pressure tested after the entire length is installed.

2. The test pressure for all piping systems shall be a minimum of 150 psi and this pressure shall be maintained for a period of two hours. Testing procedure shall be in accordance with ASTM F2164 and generally as follows.

    a. Take safety precautions as required and as specified in ASTM F2164.
    b. Completely fill pipe with clean water and remove all air from pipe to be tested.
    c. Allow water in pipe to equalize to a common temperature with surrounding ground/groundwater for 24 hours
    d. With air removed and temperature equalized, gradually bring pipe being tested to test pressure plus 10 psi. If test pressure cannot be achieved, discontinue testing and correct fault.

e. Add make-up liquid as required to maintain test pressure plus 10 psi over a 4 hour period.
f. Test Phase - Immediately following the end of the 4 hour period, reduce pressure by 10 psi and monitor pressure for 1 hour. Do not increase pressure or add make up water.
g. Pass/Fail Criteria - If no leakage is observed, and pressure during the test phase remains steady (within 5% of the test pressure) for the 1 hour test phase period, a passing test is indicated.
h. Retesting – If retesting is necessary, depressurize the test section in accordance with ASTM F2164 and correct any faults. Do not attempt to correct any faults while the system is under pressure.
i. Allow the test section to "relax" for at least 8 hours before re-pressurizing. After the relaxation period, repeat the initial expansion and test phases as described above.
j. All leaks shall be repaired regardless of the total leakage as indicated by the test, and all pipes, valves and fittings and other materials found defective under the test shall be removed and re placed at the Contractor's expense. Tests shall be repeated until leakage has been reduced below the allowable amount.
k. All visible leaks shall be repaired regardless of the total leakage as indicated by the test, and all pipes, valves and fittings and other materials found defective under the test shall be removed and replaced at the Contractor's expense. Tests shall be repeated until leakage has been reduced below the allowable amount.
l. Should, in the judgment of the Engineer, it not be practical to follow the foregoing procedures exactly for any reason, modifications in the procedure shall be made as approved by the Engineer. In any event, the Contractor shall be responsible for the ultimate tightness of the watermain within the preceding requirements.

15.07.03 PRESSURE TESTING FUSIBLE PVC SYSTEMS:

1. Fusible PVC pipe installed by the directional drill method shall be pressure tested after the entire length is installed.

2. The test pressure for the water piping constructed fusible PVC pipe shall be a minimum of 150 psi. This pressure shall be maintained for a period of not less than two hours. Tests shall be made between valves and as far as practicable and as approved by the Engineer. Potable water from the distribution system shall be used. Pressure shall not vary more than five (5) psi for piping during the test periods or as approved by the Engineer. Additionally, allowable leakage shall be computed on the basis of AWWA C-600, C-605 where practical.

3. All leaks evident at the surface shall be uncovered and repaired regardless of the total leakage as indicated by the test, and all pipes, valves and fittings and other materials found defective under the test shall be removed and replaced at the Contractor's expense. Tests shall be repeated until leakage has been reduced below the allowable amount.

4. Should, in the judgment of the Engineer, it not be practical to follow the foregoing procedures exactly for any reason, modifications in the procedure shall be made as approved by the Engineer and the City. In any event, the Contractor shall be responsible for the ultimate water tightness of the piping within the preceding requirements

15.07.04 LEAKAGE TESTING FOR NON-PRESSURE PIPING

A. Gravity sanitary sewers need to be tested for leakage.

B. Gravity sanitary sewer leakage testing may include appropriate water or low pressure air testing. The leakage outward or inward (exfiltration or infiltration) shall not exceed 25 gallons per inch of pipe diameter per mile per day for any section of the system. An exfiltration or infiltration test shall be performed with a minimum positive head of two feet. The air test, if used, shall be conducted in accordance with one of the following Standards:

1. ASTM F1417
2. UNI-B-6

C. The testing method selected shall properly consider the existing groundwater elevations during the test.

15.07.05 DEFLECTION TESTING FOR NON-PRESSURE PIPING

D. After completion of the backfill, the engineer or owner may require that a deflection test be performed.

E. Deflection tests should be conducted using a go/no-go mandrel. The mandrel's outside dimension shall be sized to permit no more than 7.5 percent deflection. The percent deflection shall be established from the base inside diameter of the pipe. If the internal beading of the fused joints for the pipe is not required to be removed, the mandrel shall account for this clearance as well. The mandrel shall be approved by the owner or engineer prior to use. Lines that permit safe entry may allow other deflection test options, such as direct measurements.

15.08 DISINFECTION FOR WATER MAIN INSTALLATION

A. The Contractor shall furnish and install suitable temporary connections to the piping, all necessary pressure pumps, hose, pipe connections, meters, gauges and other similar equipment, and all labor required, all without additional compensation for the disinfection of all required potable water piping systems. Disinfection shall be in accordance with the City. If no standards exist, disinfection shall be conducted on the following systems in the following manner:

1. All relocated and new potable water and private fire line piping.

B. Conform to AWWA Standards and as modified herein.

C. Maintain disinfectant for a minimum of 8 hours in such a manner that the entire system will be filled with water containing a minimum chlorine concentration of 50 ppm at any point.

D. After the disinfecting agents have been permitted to remain for the specified contact periods, the water lines, and valves shall be thoroughly flushed with water until the residual chlorine tests are less than 4 PPM in each instance. The determination of the amount of residual chlorine in the system shall be made at such points and in accord with standard tests by means of a standard orthotolodine test set.

E. Replace permanent system devices removed for disinfection.

15.09 BACTERIOLOGICAL SAMPLING FOR WATER MAIN INSTALLATION

A. It shall be the responsibility of the Contractor under this contract to perform the bacteriological testing required by the Florida Department of Environmental Protection and the City to obtain clearance of all piping. The Contractor shall be responsible to disinfect and repeat testing as needed until clearance is obtained for all required systems. The Contractor shall be responsible to pay for additional water needed if the bacteriological testing must be repeated.

B. The piping requires two (2) passing consecutive daily samples taken from the locations called out on the plans or as determined by the Engineer. The samples shall be taken concurrently at all the respective sample point locations.

C. Sampling must be coordinated with Engineer and other construction activities so as to minimize re-sampling.

D. Contractor shall submit schedule for bacteriological testing and pressure tests.

E. The Contractor shall incur all costs needed to provide bacteriological clearance of the piping systems.

F. If repeated tests of such samples show the presence of coliform organisms, the disinfection shall be repeated until tests indicate an absence of contamination.

15.10 QUALITY CONTROL

A. The laboratory and personnel collecting bacteriological samples shall be Florida State certified in accordance with FDEP requirements.

15.11 CONNECTIONS TO EXISTING MAINS

A. The Contractor shall make connections to existing mains as shown on the drawings only after the new mains have passed their pressure and leakage test and completed the disinfection and bacteriological clearance procedures as required.

END OF SECTION

SECTION 16 - SANITARY SEWER BYPASS PUMPING

16.01 SCOPE OF WORK

The Contractor shall furnish all labor, materials, equipment and incidentals required to maintain existing and anticipated flows within the affected portion of the collection system throughout the construction period.

16.02 PUBLIC IMPACTS

The contractor shall not create a public nuisance due to excessive noise or dust, nor impact the public with flooding of adjacent lands, discharge of raw sewage, or release of other potential hazards, nor shall he encroach on or limit access to adjacent lands. No extra charge may be made for increased costs to the contractor due to any of the above.

16.03 SUBMITTALS

The Contractor shall, within 30 days of the date of the Notice to Proceed, submit to the Project Manager a detailed Bypass Pumping Plan for each site by-pass pumping will be needed. The Bypass Pumping Plan shall address all measures and systems to prevent a sanitary sewer overflow (SSO) as defined by the EPA. The Plan shall include as a minimum:

A. Working drawings and sketches showing work location, pump location, piping layout & routing. Show all proposed encroachment and access impacts on adjacent properties or facilities.
B. Pump, control, alarm and pipe specifications or catalog cuts. Detailed sketch of controls and alarm system.
C. Power requirements and details on methods to provide by-pass power or fueling.
D. Calculation and determination of response times to prevent an SSO after a high-water alarm.
E. Procedures to be taken in case of power, pump, or piping failures; including contact names and numbers for emergency notifications.
F. Frequency and specific responsibility for monitoring pump operation, fuel levels, pump maintenance and entire length of piping.

16.04 EQUIPMENT

A. Pumps:

1. By-pass pumping system shall consist of at least a primary pump and a backup pump. Each pump shall have a minimum pumping capacity of 150% of the anticipated peak flows. When bypassing a pump station, 150% of the lift station capacity (G.P.M. & T.D.H) shall be provided.
2. Pumps shall be low noise or sound attenuated. The noise level at any operating condition, in any direction, shall not exceed 70dBA at a distance of twenty-three (23) feet (7 meters) from the pump and/or power source.

B. Controls:

The by-pass pump system shall be equipped with automatic controls and an alarm system. The automatic controls will automatically start the backup pump in the event of a high-water condition or failure of the primary pump. The alarm system will immediately notify the Contractor of a pump failure or high-water condition.

C. Pipe:

Pipe shall be of adequate size and capacity to match the pumps. Pipe type and materials will depend on the particulars of the site conditions and shall be detailed in the Bypass Pumping Plan. Contractor will provide all connections.

16.05 SITE CONDITIONS

Site conditions will vary by site. Contractor is responsible to determine and address requirements such as traffic control, excavation, connections & fittings, impacts on access to adjacent properties, routing and support of by-pass piping, etc., in the Bypass Pumping Plan.

16.06 ON-SITE MONITORING

A. The Contractor shall have personnel experienced with the pumps and controls on site within the calculated response time to prevent an SSO after a high-water alarm.

B. During by-pass operations, the Contractor shall have posted on site with the permit, a copy of the approved Plan and the name and 24-hour contact number of the primary response person, the job site superintendent, and the construction company owner.

16.07 OPERATIONS

A. The Contractor is responsible for securing and providing power, fuel, site security, traffic control and all other supplies, materials and permits required for the by-pass pumping.

B. Contractor shall demonstrate automatic pump switching and alarm system to the satisfaction of the City of St. Pete Beach, prior to beginning by-pass pumping.

Satisfactory demonstration shall be documented by the engineer's, PM's or the City's dated signature on the posted copy of the approved Bypass Pumping Plan.

16.08 DAMAGE RESTORATION & REMEDIATION

A. The Contractor shall be responsible for any pre-pump notifications, all restoration of pre-pump conditions and any damage caused by by-pass operations.

B. Should there be an SSO caused by or as a direct result of the by-pass pumping, the contractor is responsible for all immediate & long term response, notifications, clean up, mitigation, etc. Copies of all written response plans, notifications, documentation, mitigation plans, etc., shall be submitted to the City.

END OF SECTION

THIS PAGE INTENTIONALLY LEFT BLANK

SECTION 17 - VALVES AND APPURTENANCES

17.01 GENERAL

17.01.01 SCOPE OF WORK

The Contractor shall furnish all labor, materials, equipment and incidentals required and install complete and ready for operation all valves and appurtenances as shown on the Contract Drawings and as specified herein.

All valves and appurtenances shall be of the size shown on the Contract Drawings and, to the extent possible, all equipment of the same type on the Project shall be from one manufacturer.

All valves and appurtenances shall have the name of the manufacturer and the working pressure for which they are designed cast in raised letters upon some appropriate part of the body.

All valves shall have a factory applied, fusion bonded epoxy coating on interior and exterior unless noted otherwise in the Contract Drawings or the Specifications.

Any valve, unless otherwise specified, that is removed from the system shall become the property of the Contractor and he shall insure proper disposal.

The equipment shall include, but not be limited to, the following:

1. Gate valves (Sec. 17.03)
2. Pressure Sustaining and Check Valves (Sec. 17.04)
3. Ball Valves for PVC Pipe (Sec. 17.05)
4. Butterfly Valves (Sec. 17.06)
5. Plug Valves (Sec. 17.07)
6. Valve Actuators (Sec. 17.08)
7. Air Release Valves (Sec. 17.09)
8. Valves Boxes (Sec. 17.10)
9. Corporation Cocks (Sec. 17.11)
10. Flange Adapter Couplings (Sec. 17.12)
11. Flexible Couplings (Sec. 17.13)
12. Hose Bibs (Sec. 17.14)
13. Slow Closing Air and Vacuum Valves (Sec. 17.15)
14. Surge Anticipator Valve (Sec. 17.16)
15. Check Valves (Sec. 17.17)
16. Hydrants (Sec. 17.18)
17. Restraining Clamps (Sec. 17.19)
18. Tapping Sleeves and Tapping Valves (Sec. 17.20)
19. Single Acting Altitude Valves (Sec. 17.21)

17.01.02 DESCRIPTION OF SYSTEMS

All of the equipment and materials specified herein are intended to be standard for use in

controlling the flow of potable water, reclaim water, wastewater, etc., depending on the applications.

17.01.03 QUALIFICATIONS

All of the types of valves and appurtenances shall be products of well-established reputable firms who are fully experienced and qualified in the manufacture of the particular equipment to be furnished. The equipment shall be designed, constructed and installed in accordance with the best practices and methods and shall comply with these Specifications as applicable. Valves shall be as covered under mechanical devices in Section 8 of ANSI/NSF Standard 61.

17.01.04 SUBMITTALS

Submittals shall conform to the following:

A. Submit to the City within 30 days after execution of the contract a list of materials to be furnished, the names of the suppliers and the date of delivery of materials to the site.

B. Complete shop drawings of all valves and appurtenances shall be submitted to the City and Engineer for review and acceptance in accordance with the Specifications.

17.02 TOOLS

Special tools, if required for normal operation and maintenance shall be supplied with the equipment.

17.03 GATE VALVES

Gate Valves shall conform to the following:

A. All buried valves shall have cast or ductile iron three (3) piece valve bodies.

B. Where indicated on the Contract Drawings or necessary due to locations, size, or inaccessibility, chain wheel operators shall be furnished with the valves. Such operators shall be designed with adequate strength for the valves with which they are supplied and provide for easy operation of the valve. Chains for valve operators shall be galvanized.

C. Where required, gate valves shall be provided with a box cast in a concrete slab and a box cover. Length of box shall include slab thickness. Box cover opening shall be for valve stem and nut. Valve wrenches and extension stems shall be provided by the manufacturer to actuate the valves. The floor box and cover shall be equal to those manufactured by Rodney Hunt Machine Company, Orange, Massachusetts, Clow, DeZurik or approved equal.

D. Gate valves with 3inch-20inch diameters shall be resilient seated, manufactured to meet or exceed the requirements of AWWA C509 or C515 and UL/FM of latest revision and in accordance with the following specifications. Valves shall have an unobstructed waterway equal to or greater than the full nominal diameter of the valve.

E. Wrench nut shall be provided for operating the valve.

F. Valves shall be suitable for an operating pressure of 200 psi and shall be tested in accordance with AWWA C509 or C515. Mueller, Kennedy, M&H, and Clow are acceptable valves.

G. All bonnet bolts, nuts and studs shall be stainless steel.

17.04 PRESSURE SUSTAINING AND CHECK VALVE

Pressure sustaining and check valves shall conform to the following:

A. Pressure sustaining and check valve shall be pilot operated diaphragm actuated valve with cast iron body, bronze trim, and 125-pound flanged ends. The valve shall be hydraulically operated, diaphragm type globe valve. The main valve shall have a single removable seat and a resilient disc, of rectangular cross section, surrounded on three and a half sides. The stainless-steel stem shall be fully guided at both ends by a bearing in the valve cover, and an integral bearing in the valve seat. It shall be sleeved at both ends with delrin. No external packing glands are permitted and there shall be no pistons operating the main valve or any controls. The valve shall be equipped with isolation cocks to service the pilot system while permitting flow if necessary. Main valve and all pilot controls shall be manufactured in the United States of America. Valve shall be single chamber type, with seat cut to 5 degrees taper.

B. Valve shall maintain a minimum (adjustable) upstream pressure to a preset (adjustable) maximum. The pilot system shall consist of two direct acting, adjustable, spring loaded diaphragm valves.

C. Valve shall be cast iron (ASTM A48) with main valve trim of brass (QQB-B-626) and bronze (ASTM B61). The pilot control valves shall be cast brass (ASTM B62) with 303 stainless steel trim. All ferrous surfaces inside and outside shall have a 2-part epoxy coating. Valve shall be similar in all respects to CLA-VAL Company, Model 692G-01ABKG, as manufactured by CLA-VAL Company, Winter Park, Florida, or similar pressure sustaining and check valve as manufactured by Golden Alderson; or approved equal.

17.05 BALL VALVES FOR PVC PIPE

Ball valves shall conform to the following:

A. Ball valves for PVC pipe shall be of PVC Type 1 with union, socket, threaded or flanged ends as required. Ball valves shall be full port, full flow, all plastic construction, 150 psi rated with Teflon seat seals and T-handles. PVC ball valves shall be as manufactured by Celanese Piping Systems, Inc., Wallace and Tiernan, Inc., Plastiline, Inc., or approved equal.

B. All valves shall be mounted in such a position that valve position indicators are plainly visible when standing on the floor.

17.06 BUTTERFLY VALVES

Butterfly valves shall conform to the following:

A. Butterfly valves shall conform to the AWWA Standard Specifications for Rubber Seated Butterfly Valves, Designated C504, except as hereinafter specified. Valves, except as specified hereinafter, shall be Class 150A or B, except that valves furnished downstream of the high service pumps shall be Class 250 and equal to those manufactured by Henry Pratt Company, DeZurik, Mueller, or approved equal. M&H/Kennedy/Clow are not generally approved equals. Ductile iron conforming to ASTM A536, Grade 65-45-12 shall be provided for all Class 250 valves. All valves shall be leak tested at 200 psi.

B. The face-to-face dimensions of flanged end valves shall be in accordance with Table 1 of above mentioned AWWA Specification for short-body valve. Adequate two-way thrust bearings shall be provided. Flange drilling shall be in accordance with ANSI B16.1.

C. Valve seats shall be an EPDM elastomer. Valve seats 24 inches and larger shall be field adjustable and replaceable without dismounting operator disc or shaft and without removing the valve from the line. All retaining segments and adjusting devices shall be of corrosion resistant material with stainless Nylock screws and be capable of the 1/8-inch adjustment. Valves 20 inches and smaller shall have bonded or mechanically restrained seats as outlined in AWWA C 504. Where the EPDM seat is mounted on the valve body, the mating edge of the valve disc shall be 18-8 stainless steel or Nickel-Chrome, 80-20%. Where the EPDM seat is mounted on the valve disc, the valve body shall be fitted with an 18-8 stainless steel seat offset from the shaft, mechanically restrained and covering 360 degrees of the peripheral opening or seating surface.

D. The valve body shall be constructed of ductile iron or close grain cast iron per ASTM A126, Class B with integrally cast hubs for shaft bearing housings of the through boss-type. Butterfly valves of the "wafer" or "spool" type will not be accepted.

E. The valve shaft shall be turned, ground, and polished constructed of 18-8, ASTM A-276, Type 304 stainless steel and designed for both torsional and shearing stresses when the valve is operated under its greatest dynamic or seating torque. Shaft shall be of either a one-piece unit extending full size through the valve disc and valve bearing or it may be of a stub shaft design. Shaft bearings shall be Teflon or nylon, self-lubricated type.

F. All valves shall be subject to hydrostatic and leakage tests at the point of manufacture. The hydrostatic test for Class 250 valves shall be performed with an internal hydrostatic pressure equal to 500 psi applied to the inside of the valve body of each valve for a period of five minutes. During the hydrostatic test, there shall be no leakage through the metal, the end joints or the valve shaft seal. The leakage test for the Class 250 valves shall be performed at a differential pressure of 230 psi and against both sides of the valve. No adjustment of the valve disc shall be necessary after pressure test for normal operation of valve. The Class 150 valves shall be tested in conformance with AWWA C-504.

G. In general, the butterfly valve operators shall conform to the requirements of Section 3.8 of the AWWA Standard Specifications for Rubber Seated Butterfly Valves, Designation C504, insofar as

applicable, and as herein specified.

H. Gearing for the operators shall be totally enclosed in a gear case in accordance with paragraph 3.8.3 of the above mentioned AWWA Standard Specification.

I. Operators shall be capable of seating and unseating the disc against the full design pressure of velocity, as specified for each class, into a dry system downstream and shall transmit a minimum torque to the valve. Operators shall be rigidly attached to the valve body.

J. The manufacturer shall certify that the required tests on the various materials and on the completed valves have been satisfactory and that the valves conform with all requirements of this Specification and the AWWA standard.

K. Where indicated on the Contract Drawings, extension stems, floor stands, couplings, stem guides, and floor boxes as required shall be furnished and installed.

17.07 PLUG VALVES

Plug valves shall conform to the following:

A. All plug valves shall be eccentric plug valves capable of sustaining 150 psi in either direction without leaking.

Exception: Single direction plug valves may be used if it is clearly demonstrated they will never be required to resist pressure in both directions either in service or during pipe line testing.

B. Plug valves shall be tested in accordance with current AWWA Standard C-504-80 Section 5. Each valve shall be performance tested in accordance with paragraph 5.2 and shall be given a leakage test and hydrostatic test as described in paragraphs 5.3 and 5.4. Plug valves shall be Kennedy or Dezurik.

C. Plug valves shall be of the non-lubricated eccentric type with resilient faced plugs and shall be furnished with end connections as shown on the Contract Drawings. Flanged valves shall be faced and drilled to the ANSI 150 lb. standard. Mechanical joint ends shall be to the AWWA Standard C111-72. Bell ends shall be to the AWWA Standard C100-55 Class B. Screwed ends shall be to the NPT standard.

D. Plug valve bodies shall be of ASTM A126 Class B Semi-steel, 31,000 psi tensile strength minimum in compliance with AWWA Standard C507-73, Section 5.1 and AWWA Standard C504-70 Section 6.4. Port areas for valves 20-inches and smaller shall be full port 100 percent of full pipe area. Valves 24-inch and larger shall have a minimum port area between 80 and 100 percent of full nominal pipe area. All exposed nuts, bolts, springs, washers, etc. shall be zinc or cadmium plated. Resilient plug facings shall be of Hycar or Neoprene.

E. Plug valves shall be furnished with permanently lubricated stainless steel or oil-impregnated bronze upper and lower plug stem bushings. These bearings shall comply with current AWWA Standards.

17.08 VALVE ACTUATORS

17.08.01 GENERAL

A. All valve actuators shall conform to Section 3.8 of the AWWA Standard Specification and shall be either manual or motor operated.

B. Actuators shall be capable of seating and unseating the disc against the full design pressure and velocity, as specified for each class, into a dry system downstream, and shall transmit a minimum torque to the valve. Actuators shall be rigidly attached to the valve body.

C. Butterfly valve actuators shall conform to the requirements of Section 3.8 of the AWWA Standard specifications for Rubber Seated Butterfly Valves, Designated C504, insofar as applicable and as herein specified.

17.08.02 MANUAL ACTUATORS

A. Manual actuators shall have permanently lubricated, totally enclosed gearing with handwheel and gear ratio sized on the basis of actual line pressure and velocities. Actuators shall be equipped with handwheel, position indicator, and mechanical stop-limiting locking devices to prevent over travel of the disc in the open and closed positions. They shall turn counter-clockwise to open valves. Manual actuators shall be of the traveling nut, self-locking type and shall be designed to hold the valve in any intermediate position between fully open and fully closed without creeping or fluttering. Actuators shall be fully enclosed and designed to produce the specified torque with a maximum pull of 80 pounds on the handwheel or chainwheel. Actuator components shall withstand an input of 450 foot pounds for 30-inch and smaller and 300 foot pounds for larger than 30-inch size valves at extreme actuator positions without damage. Valves located above grade shall have handwheel and position indicator, and valves located below grade shall be equipped with a 2-inch square AWWA operating nut located at ground level and cast-iron extension type valve box. Valve actuators shall conform to AWWA C504, latest revision.

17.08.03 MOTOR ACTUATORS (MODULATING)

A. The motor actuated valve controller shall include the motor, actuator unit gearing, limit switch gearing, limit switches, position transmitter which shall transmit a 4-20 mA DC signal, control power transformer, electronic controller which will position the valve based on a remote 4-20 milliamp signal, torque switches, bored and key-wayed drive sleeve for non-rising stem valves, declutch lever and auxiliary handwheel as a self-contained unit.

B. The motor shall be specifically designed for valve actuator service using 480-volt, 60 Hertz, three phase power as shown, on the electrical drawings. The motor shall be sized to provide an output torque and shall be the totally enclosed, non-ventilated type. The power gearing shall consist of helical gears fabricated from heat treated alloy steel forming the first stage of reduction. The second reduction stage shall be a single stage worm gear. The worm shall be of alloy steel with carburized threads hardened and ground for high

efficiency. The worm gear shall be of high tensile strength bronze with hobbed teeth. All power gearing shall be grease lubricated. Ball or roller bearings shall be used throughout. Preference will be given to units having a minimum number of gears and moving parts. Spur gear reduction shall be provided as required.

C. Limit switches and gearing shall be an integral part of the valve control. The limit switch gearing shall be made of bronze and shall be grease lubricated, intermittent type and totally enclosed to prevent dirt and foreign matter from entering the gear train. Limit switches shall be of the adjustable type capable of being adjusted to trip at any point between fully opened valve and fully closed valve.

D. The speed of the actuator shall be the responsibility of the system supplier with regard to hydraulic requirements and response compatibility with other components within the control loop. Each valve controller shall be provided with a minimum of two rotor type gear limit switches, one for opening and one for closing. The rotor type gear limit switch shall have two normally open and two normally closed contacts per rotor. Gear limit switches must be geared to the driving mechanism and in step at all times whether in motor or manual operation. Provision shall be made for two additional rotors as described above, each to have two normally open and two normally closed contacts. Each valve controller shall be equipped with a double torque switch. The torque switch shall be adjustable and will be responsive to load encountered in either direction of travel. It shall operate during the complete cycle without auxiliary relays or devices to protect the valve, should excessive load be met by obstructions in either direction of travel. The torque switch shall be provided with double-pole contacts.

E. A permanently mounted handwheel shall be provided for manual operation. The handwheel shall not rotate during electric operations but must be responsive to manual operation at all times except when being electrically operated. The motor shall not rotate during hand operation nor shall a fused motor prevent manual operation. When in manual operating position, the unit will remain in this position until motor is energized at which time the valve operator will automatically return to electric operation and shall remain in motor position until handwheel operation is desired. This movement from motor operation to handwheel operation shall be accomplished by a positive declutching lever which will disengage the motor and motor gearing mechanically, but not electrically. Hand operation must be reasonably fast. It shall be impossible to place the unit in manual operation when the motor is running. The gear limit switches and torque switches shall be housed in a single easily accessible compartment integral with the power compartment of the valve control. All wiring shall be accessible through this compartment. Stepping motor drives will not be acceptable.

F. The motor with its control module must be capable of continuously modulating over its entire range without interruption by heat protection devices. The system, including the operator and control module must be able to function, without override protection of any kind, down to zero dead zone.

G. All units shall have strip heaters in both the motor and limit switch compartments.

H. The actuator shall be equipped with open-stop-close push buttons, an auto-manual selector switch, and indicating lights, all mounted on the actuator or on a separate locally mounted power control station.

I. The electronics for the electric operator shall be protected against temporary submergence.

J. Actuators shall be Limitorque L120 with Modutronic Control System containing a position transmitter with a 4-20MA output signal or equal.

17.08.04 MOTOR ACTUATORS (OPEN-CLOSE)

A. The electronic motor-driven valve actuator shall include the motor, actuator gearing, limit switch gearing, limit switches, torque switches, fully machined drive sleeve, declutch lever, and auxiliary handwheel as a self-contained unit.

B. The motor shall be specifically designed for valve actuator service and shall be of high torque totally enclosed, nonventilated construction, with motor leads brought into the limit switch compartment without having external piping or conduit box.

a) The motor shall be of sufficient size to open or close the valve against maximum differential pressure when voltage to motor terminals is 10% above or below nominal voltage.
b) The motor shall be prelubricated and all bearings shall be of the anti-friction type.

C. The power gearing shall consist of helical gears fabricated from heat treated steel and worm gearing. The worm shall be carburized and hardened alloy steel with the threads ground after heat treating. The worm gear shall be of alloy bronze accurately cut with a hobbing machine. All power gearing shall be grease lubricated. Ball or roller bearings shall be used throughout.

D. Limit switches and gearing shall be an integral part of the valve actuator. The switches shall be of the adjustable rotor type capable of being adjusted to trip at any point between fully opened valve and fully closed valve. Each valve controller shall be provided with a minimum of two rotor type gear limit switches, one for opening and one for closing (influent valves require additional contacts to allow stopping at an intermediate position). The rotor type gear limit switch shall have two normally open and two normally closed contacts per toro. Additional switches shall be provided if shown on the control and/or instrumentation diagrams. Limit switches shall be geared to the driving mechanism and in step at all times whether in motor or manual operation. Each valve actuator shall be equipped with a double torque switch. The torque switch shall be adjustable and will be responsive to load encountered in either direction of travel. It shall operate during the complete cycle without auxiliary relays or devices to protect the valve should excessive load be met by obstructions in either direction of travel. Travel and thrusts shall be independent of wear in valve disc or seat rings.

E. A permanently mounted handwheel shall be provided for manual operation. The

handwheel shall not rotate during electric operation except when being electrically operated. The motor shall not rotate during hand operation, nor shall a fused motor prevent manual operation. When in manual operating position, the unit will remain in this position until motor is energized at which time the valve actuator will automatically return to electric operation and shall remain in motor position until handwheel operation is desired. Movement from motor operation to handwheel operation shall be accomplished by a positive declutching lever which will disengage the motor and motor gearing mechanically, but not electrically. Hand operation must be reasonably fast. It shall be impossible to place the unit in manual operation when the motor is running.

F. Valve actuators shall be equipped with an integral reversing controller and three phase overload relays, Open-Stop-Close push buttons, local-remote-manual selector switch, control circuit transformer, three-phase thermal overload relays and two pilot lights in a NEMA 4X enclosure. In addition to the above, a close coupled air circuit breaker or disconnect switch shall be mounted and wired to the valve input power terminals for the purpose of disconnecting all underground phase conductors.

G. The valve actuator shall be capable of being controlled locally or remotely via a selector switch integral with the actuator. In addition, an auxiliary dry contact shall be provided for remote position feedback.

H. Valve A.C. motors shall be designed for operation on a 480 volt, 3-phase service. Valve control circuit shall operate from a fuse protected 120-volt power supply.

I. Motor operators shall be as manufactured by Limitorque Corporation, Type L120 or approved equal.

17.09 AIR RELEASE VALVES

The air release valves for use in water or force mains shall be installed as shown on the Contract Drawings. The valves shall have a 316 stainless steel body and cover, 316 stainless steel float, plug, seat ring, and internal mechanism, bronze water diffuser, Buna-N or Viton seat, and 316 stainless steel trim and hardware. The fittings shall be threaded. Back flushing attachments shall be included. The air release valves shall be Figure 942 or 942F as manufactured by VAG/GA Industries or approved equal.

17.10 VALVE BOXES

Valve Boxes shall conform to the following:

A. Buried valves shall have cast-iron three-piece valve boxes or HDPE adjustable valve boxes. Cast iron valve boxes shall be provided with suitable heavy bonnets and shall extend to such elevation at or slightly above the finished grade surface as directed by the City. The barrel shall be two-piece, screw type, having a 5 1/4-inch shaft. The upper section shall have a flange at the bottom with sufficient bearing area to prevent settling and shall be complete with cast iron covers. Covers shall have WATER, SEWER, or RECLAIM, as applicable, cast into the top. Lids will be painted “safety” blue for potable, purple for reclaimed, and green for sanitary sewer.

B. All valves shall have actuating nuts extended to within four (4) feet of the top of the valve box. All valve extensions will have a centering guide plate two (2) inches maximum below the actuating nut. The valve extension shall be fastened to the existing nut with a set screw. Valve boxes shall be provided with a concrete base and a valve nameplate engraved with lettering 1/8-inch deep as shown on the Contract Drawings.

C. HDPE adjustable valve boxes shall be one complete assembled unit composed of the valve box and extension stem. All moving parts of the extension stem shall be enclosed in a housing to prevent contact with the soil. Valve box assembly shall be adjustable to accommodate variable trench depths.

D. The entire assembly shall be made of heavy wall high density polyethylene. All exterior components shall be joined with stainless steel screws. The valve box top section shall be adaptable to fit inside a valve box upper section.

E. The stem assembly shall be of a telescoping design that allows for variable adjustment length. The stem material shall be of plated steel square tubing. The stem assembly shall have a built-in device that keeps the stem assembly from disengaging at its fully extended length. The extension stem must be torque tested to 1000 foot pounds. Covers shall have WATER, SEWER or RECLAIMED clearly and permanently impressed into the top surface.

17.11 CORPORATION COCKS

Corporation cocks for connections to cast-iron, ductile iron or steel piping shall be all brass or bronze suitable for 180 psi operating pressure and similar to Mueller Co. H-10046 or approved equal by Clow Corp. and shall be of sizes required and/or noted on the Contract Drawings.

17.12 FLANGE ADAPTER COUPLINGS

Flange adapter couplings shall be of the size and pressure rating required for each installation and shall be suitable for use on either cast iron or ductile iron pipe. They shall be similar or approved equal to Dresser Company, Style 128. All couplings shall have a sufficient number of factory installed anchor studs to meet or exceed a minimum test pressure rating of 230 psi minimum.

17.13 FLEXIBLE COUPLINGS

A. Flexible couplings shall be either the split type or the sleeve type as shown on the Contract Drawings.

B. Split type coupling shall be used with all interior piping and with exterior piping noted on the Contract Drawings. The couplings shall be mechanical type for radius groove piping. The couplings shall mechanically engage and lock grooved pipe ends in a positive couple and allow for angular deflection and contracting and expansion.

C. Couplings shall consist of malleable iron, ASTM Specification A47, Grade 32510 housing clamps in two or more parts, a single chlorinated butyl composition sealing gasket with a "C" shaped cross-section and internal sealing lips projecting diagonally inward, and two or more oval track head type

bolts with hexagonal heavy nuts conforming to ASTM Specification A 183 and A194 to assemble the housing clamps. Bolts and nuts shall be hot dipped galvanized after fabrication.

D. Victualic type couplings and fittings may be used in lieu of flanged joints. Pipes shall be radius grooved as specified for use with the Victaulic couplings. Flanged adapter connections at fittings, valves, and equipment shall be Victaulic Vic Flange Style 741, equal by Gustin-Bacon Group, Division of Certain-Teed Products, Kansas City, Kansas, or approved equal.

E. Sleeve type couplings shall be used with all buried piping. The couplings shall be of steel and shall be Dresser Style 38 or 40, as shown on the Contract Drawings, or equal. The coupling shall be provided with hot dipped galvanized steel bolts and nuts unless indicated otherwise.

F. All couplings shall be furnished with the pipe stop removed.

G. Couplings shall be provided with gaskets of a composition suitable for exposure to the liquid within the pipe.

H. If the Contractor decides to use victaulic couplings in lieu of flanged joints, he shall be responsible for supplying supports for the joints.

17.14 HOSE BIBS

Hose bibs shall be 3/4-inch or 1-inch brass, polished chromium plated brass, with vacuum breaker as noted on the Contract Drawings.

17.15 SLOW CLOSING AIR AND VACUUM VALVES

A. The Contractor shall furnish and install slow closing air and vacuum valves as shown on the Contract Drawings which shall have two (2) independent valves bolted together. The air and vacuum valve shall have all stainless-steel float, guided on both ends with stainless shafts. The air and vacuum valve seat shall be Buna-N to insure drop tight closure. The Buna-N seat shall be fastened to the cover stainless shoulder screws in a manner to prevent distortion of the seat. The float shall be guided at both ends with stainless steel bushings.

B. The valve cover shall have a male lip designed to fit into the body register for accurate alignment of the float into the Buna-N seat. The valve cover shall have 250-pound class flanged outlet connection.

C. The surge check valve shall be bolted to the inlet of the air and vacuum valve and consist of a body, seat, disc, and compression spring. A surge check unit shall operate on the interphase between the kinetic energy and relative velocity flows of air and water, so that after air passes through, and water rushes into the surge check, the disc starts to close, reducing the rate of flow of water into the air valve by means of throttling orifices in the disc to prevent water hammer in the air valves. The surge check orifices must be adjustable type for regulation in the field to suit operating conditions. Valve shall be rated for 250-pound class working pressure.

D. The complete slow closing air and vacuum valve with air release valve shall have been flow tested in the field, substantiated with test data to show reduction of surge pressure in the valve. Flow test data

shall be submitted with initial shop drawings for review and acceptance.

E. Valve exterior to be painted Red Oxide, Phenolic TT-P86, Primer or approved equal for high resistance to corrosion.

F. All materials of construction shall be certified in writing to conform to ASTM specifications as follows:

Air Valve Cover, Body, and Surge Check Body	Cast Iron	ASTM A48, Class 30
Float	Stainless Steel	ASTM A240
Surge Check Seat and Disc	Stainless Steel	ASTM A582
Air Valve Seat Spring	Buna-N Stainless Steel	T302

17.16 SURGE ANTICIPATOR VALVES

A. Surge anticipator valves shall be furnished for the pumping systems as shown on the Contract Drawings. The valve shall be hydraulically operated, pilot controlled, and diaphragm or piston actuated. The main valve shall be cast iron conforming to ASTM A48 with bronze trim conforming to ASTM B61 and flanged ends conforming to ANSI B161.1. The main valve shall be globe type with a single removable seat and a resilient disc.

B. The diaphragm actuated valve shall have a stainless-steel stem guided at both ends by a bearing in the valve cover and an integral bearing surface in the seat. No external packing glands shall be permitted. The valve shall be fully serviceable without removing it from the line. The pilot system shall be of noncorrosive construction and provided with isolation cocks.

C. The piston actuated valve shall operate on the differential piston principle. The valve piston shall be guided on its outside diameter. The valve shall be able to operate in any position and shall be fully serviceable without removing it from the line. The pilot system shall be provided with isolation cocks and be of noncorrosive materials of construction.

D. The valve shall be designed specifically to minimize the effects of water hammer, resulting from power failure at the pumping station, or from normal stopping and starting of pumping operators. The valve shall open hydraulically on a down surge, or low-pressure wave created when the pump stops, remain open during the low-pressure cycle in order to be open when the high-pressure wave returns. The high-pressure pilot shall be adjustable over a 20 to 200 psi range and the low-pressure pilot shall be adjustable over a 15 to 75 psi range. The valve shall be the 250 Class.

17.17 CHECK VALVES

A. Check valves for cast iron and ductile iron pipe lines shall be swing type and shall meet the material requirements of AWWA Specification C508. The valves shall be iron body, bronze mounted, single disc, 175 psi working water pressure and nonshock. Valves shall be as manufactured by Mueller, Clow, Kennedy, or M&H. Valves 8-inch and larger shall be air cushioned to reduce valve slam.

B. When there is no flow through the line, the disc shall hang lightly against its seat in practically a vertical position. When open, the disc shall swing clear of the waterway.

C. Check valves shall have bronze seat and body rings, extended bronze hinge pins and bronze nuts on the bolts of bolted covers. The interior and exterior of the valve body shall have a factory applied fusion bonded or 10 mil 2-part epoxy coating (Protecto 401 or approved equal).

D. Valves shall be so constructed that disc and body seat may easily be removed and replaced without removing the valve from the line. Valves shall be fitted with an extended hinge arm with outside lever and weight. Weights provided and approved by the City shall be installed.

17.18 HYDRANTS

Hydrants shall be AVK Series 2780 Barrel (nostalgic style with stainless steel bolts) American Darling B-84-B or Mueller Super Centurian 250, or approved equal and shall conform to the "Standard Specification for Fire Hydrants for Ordinary Water Works Service", AWWA C502, and UL/FM certified, and shall in addition meet the specific requirements and exceptions which follow:

1. Hydrants shall be according to manufacturer's standard pattern and of standard size and shall have one 4-1/2inch steamer nozzle and two 2-1/2 inch hose nozzles.
2. Hydrant inlet connections shall have mechanical joints for 6 inch ductile-iron pipe.
3. Hydrant valve opening shall have an area at least equal to that area of a 5-1/4 inch minimum diameter circle and be obstructed only by the valve rod. Each hydrant shall be able to deliver 500 gallons minimum through its two 2-1/2 inch hose nozzles when opened together with a loss of not more than 2 psi in the hydrants.
4. Each hydrant shall be designed for installation in a trench that will provide 5-ft. cover.
5. Hydrants shall be hydrostatically tested as specified in AWWA C502.
6. Hydrants shall be rated at 200 psi.
7. All nozzle threads shall be American National Standard.
8. Each nozzle cap shall be provided with a Buna N rubber washer.
9. Hydrants shall be so arranged that the direction of outlets may be turned 90 degrees without interference with the drip mechanism and without the mechanism obstructing the discharge from any outlet.
10. Hydrants must be capable of being extended without removing any operating parts.
11. Hydrants shall have bronze-to-bronze seatings as per AWWA C502-85.
12. Hydrant main valve closure shall be of the compression type opening against the pressure and closing with the pressure. The resilient seat material shall meet the requirements of AWWA C-509 and shall preferably be EPDM Elastomer.
13. Internal and below ground iron parts (bonnet, nozzle section and base) shall have a fusion bonded epoxy coating per AWWA C550. Aboveground external hydrant parts (cap, bonnet and nozzle section) shall be either epoxy coated together with a UV resistant polyester coating or have two shop coats of paint per AWWA C502. The lower stand pipe or barrel shall be protected with asphaltic coatings per AWWA C502.
14. Exterior nuts, bolts and washer shall be stainless steel. Bronze nuts may be used below grade.
15. All internal operating parts shall be removable without requiring excavation.

17.19 RESTRAINING CLAMPS

Restraining clamp assemblies as detailed in the Contract Drawings for use at hydrant connections to water mains, or at fittings where shown on the Contract Drawings, shall be as manufactured by American

Cast Iron Pipe, Star Pipe Products, U.S. Pipe; or approved equal.

17.20 TAPPING SLEEVES AND GATE VALVES

Tapping valves shall meet the requirement of AWWA C500. The valves shall be flanged, shall be mechanical joint outlet with non-rising stem, designed for vertical burial and shall open left or counterclockwise. Stuffing boxes shall be the "O-ring" type. Operating nut shall be AWWA Standard 2-inch square for valves 2-inch and up. The valves shall be provided with an overload seat to permit the use of full size cutters. Gaskets shall cover the entire area of flange surfaces and shall be supplied with EPDM wedges up to 30-inch diameter.

Tapping sleeves and saddles shall seal to the pipe by the use of a confined "O" ring gasket and shall be able to withstand a pressure test of 180 psi for one hour with no leakage in accordance with AWWA C110, latest edition. A stainless steel 3/4-inch NPT test plug shall be provided for pressure testing. All bolts joining the two halves shall be stainless steel and shall be included with the sleeve or saddle. Sleeves and saddles shall be protected from corrosion by being fusion applied epoxy coated or be made of 18-8 Type 304 stainless steel. Saddle straps shall be 18-8 Type 304 stainless steel.

17.21 SINGLE ACTING ALTITUDE VALVES

17.21.01 FUNCTION

A. The altitude control valve shall be of the single acting type, closing off tightly when the water reaches the maximum predetermined level in the tank to prevent overflow; and opening to permit replenishing of the tank supply when the water level drops approximately 6-inch to 12-inch below the maximum level.

B. A hand operated valve in the power water line to the top of the piston shall permit adjustment of the speed of valve closing. The tank water level control shall be by means of a diaphragm operated, spring loaded, three-way pilot which directs power water to or from the top of the main valve piston. The three-way pilot shall be of bronze construction. The diaphragm surface exposed to the tank head shall be not less than 57 sq. inches. It shall be possible to adjust the spring above the diaphragm for water level control approximately 20% above or below the factory setting.

17.21.02 DESCRIPTION

A. The main valve shall operate on the differential piston principle such that the area on the underside of the piston is no less than the pipe area on the upper surface of the piston is of a greater area than the underside of the piston.

B. The valve piston shall be guided on its outside diameter by long stroke stationary Vee ports which shall be downstream of the seating surface to minimize the consequences of throttling. Throttling shall be done by the valve Vee ports and not the valve seating surfaces.

C. The valve shall be capable of operating in any position and shall incorporate only one flanged cover at the valve top from which all internal parts shall be accessible. There shall be no

stems, stem guides, or spokes within the waterway. There shall be no springs to assist the valve operation.

17.21.03 CONSTRUCTION

A. The valve body shall be of cast iron ASTM A-126 with flanges conforming to the latest ANSI Standards. The valve shall be extra heavy construction throughout. The valve interior trim shall be bronze B-62 as well as the main valve operation.

B. The valve seals shall be easily renewable while no diaphragm shall be permitted within the main valve body.

C. All controls and piping shall be of non-corrosive construction.

D. A visual valve position indicator shall be provided for observing the valve piston position at any time.

17.21.04 FIGURE NUMBER

The valves shall be the 20-inch Globe type (Fig. 3200-D) as manufactured by GA Industries of Mars, Pennsylvania, or approved equal.

17.22 INSTALLATION

A. All valves and appurtenances shall be installed in the location shown, true to alignment and rigidly supported. Any damage occurring to the above items before they are installed shall be repaired to the satisfaction of the City.

B. After installation, all valves and appurtenances shall be tested at least two hours at the working pressure corresponding to the class of pipe, unless a different test pressure is specified. If any joint proves to be defective, it shall be repaired to the satisfaction of the City.

C. Install all floor boxes, brackets, extension rods, guides, the various types of operators and appurtenances as shown on the Contract Drawings that are in masonry floors or walls, and install concrete inserts for hangers and supports as soon as forms are erected and before concrete is poured. Before setting these items, the Contractor shall check all Contract Documents which have a direct bearing on their location and he shall be responsible for the proper location of these valves and appurtenances during the construction of the structures.

D. Pipe for use with flexible couplings shall have plain ends as specified in the respective pipe sections.

E. Flanged joints shall be made with high strength, low alloy Corten bolts, nuts and washers. Mechanical joints shall be made with mild corrosion resistant alloy steel bolts and nuts. All exposed bolts shall be painted the same color as the pipe. All buried bolts and nuts shall be heavily coated with two (2) coats of bituminous paint comparable to Inertol No. 66 Special Heavy.

F. Prior to assembly of split couplings, the grooves as well as other parts shall be thoroughly cleaned.

The ends of the pipes and outside of the gaskets shall be moderately coated with petroleum jelly, cup grease, soft soap or graphite paste, and the gasket shall be slipped over one pipe end. After the other pipe has been brought to the correct position, the gasket shall be centered properly over the pipe ends with the lips against the pipes. The housing sections then shall be placed. After the bolts have been inserted, the nuts shall be tightened until the housing sections are firmly in contact, metal-to-metal, without excessive bolt tension.

G. Prior to the installation of sleeve-type couplings, the pipe ends shall be cleaned thoroughly for a distance of 8-inch. Soapy water may be used as a gasket lubricant. A follower and gasket, in that order, shall be slipped over each pipe to a distance of 6-inches from the end.

H. Valve boxes with concrete bases shall be installed as shown on the Contract Drawings. Mechanical joints shall be made in the standard manner. Valve stems shall be vertical in all cases. Place cast iron box over each stem with base bearing on compacted fill and the top flush with final grade. Boxes shall have sufficient bracing to maintain alignment during backfilling. Knobs on cover shall be parallel to pipe. Remove any sand or undesirable fill from valve box.

17.23 HYDRANT INSTALLATION

A. Hydrants shall be set at the locations designated by the City and/or as shown on the Contract Drawings and shall be bedded on a firm foundation. A drainage pit on crushed stone as shown on the Contract Drawings shall be filled with gravel or crushed stone and satisfactorily compacted. During backfilling, additional gravel or crushed stone shall be brought up around and 6-inch over the drain port. Each hydrant shall be set in true vertical alignment and shall be properly braced. Concrete thrust blocks shall be placed between the back of the hydrant inlet and undisturbed soil at the end of the trench. Minimum bearing area shall be as shown on the Contract Drawings. Felt paper shall be placed around the hydrant elbow prior to placing concrete. CARE MUST BE TAKEN TO ENSURE THAT CONCRETE DOES NOT PLUG THE DRAIN PORTS. Concrete used for backing shall be as specified herein.

B. When installations are made under pressure, the flow of water through the existing main shall be maintained at all times. The diameter of the tap shall be a minimum of 2-inch less than the inside diameter of the branch line.

C. The entire operation shall be conducted by workmen thoroughly experienced in the installation of tapping sleeves and valves, and under the supervision of qualified personnel furnished by the manufacturer. The tapping machine shall be furnished by the Contractor if tap is larger than 12-inch in diameter.

D. The Contractor shall determine the locations of the existing main to be tapped to confirm the fact that the proposed position for the tapping sleeve will be satisfactory and no interference will be encountered such as the occurrence of existing utilities or of a joint or fitting at the location proposed for the connection. No tap will be made closer than 30-inch from a pipe joint.

E. Tapping valves shall be set in vertical position and be supplied with a 2-inch square operating nut for valves 2-inch and larger. The valve shall be provided with an oversized seat to permit the use of full sized cutters.

F. Tapping sleeves and valves with boxes shall be set vertically or horizontally as indicated on the Contract Drawings and shall be squarely centered on the main to be tapped. Adequate support shall be provided under the sleeve and valve during the tapping operation. Sleeves shall be no closer than 30-inch from water main joints. Thrust blocks shall be provided behind all tapping sleeves. Proper tamping of supporting earth around and under the valve and sleeve is mandatory. After completing the tap, the valve shall be flushed to ensure that the valve seat is clean.

17.24 SHOP PAINTING

Ferrous surfaces of valves and appurtenances shall receive a coating of rust-inhibitive primer. All pipe connection openings shall be capped to prevent the entry of foreign matter prior to installation.

17.25 FIELD PAINTING

All metal valves and appurtenances specified herein and exposed to view shall be painted according to the Specifications. All above ground potable water main valves shall be painted safety blue.

17.26 INSPECTION AND TESTING

Completed pipe shall be subjected to hydrostatic pressure test for two hours at 180 psi. All leaks shall be repaired and lines retested as approved by the City. Prior to testing, the pipelines shall be supported in an approved manner to prevent movement during tests.

END OF SECTION

THIS PAGE INTENTIONALLY LEFT BLANK

SECTION 18 - SANITARY SEWER CONSTRUCTION

18.01 GENERAL

The Work in this section includes construction of sanitary sewer gravity pipes, force mains, manholes, and appurtenances.

Sanitary Sewers are to be constructed at locations indicated on the Contract Drawings. The City reserves the right, however, to make minor changes in grade and/or alignment as the Work progresses.

All Work shall be fully completed within the established limits as outlined for the various Pay Items listed in the Proposal. It is not the intent of the City to allow additional compensation for obstructions, interferences, or similar contingencies on this Project.

Pipe materials used for gravity sewers shall be subject to the depth limitations indicated in accordance with the Contract Documents.

All force main pipe and fittings shall be furnished and installed in accordance with the applicable requirements of the Technical Specifications sections headed “Piping Materials: Ductile Iron Pipe,” “Piping Materials: PVC Pressure Pipe,” and "Pressure Pipe Construction."

At the ends of the sections where adjoining pipelines have not been completed and are not ready to connect, temporary bulkheads or plugs (as specified herein) approved by the Engineer shall be installed. All such bulkheads or plugs shall be removed when they are no longer needed or when ordered by the Engineer.

All pipelines shall be tested and closed-circuit television video (CCTV) inspected. Any leak or defect shall be repaired and re-televised. Tests shall be conducted in accordance with these Specifications.

PVC pipe for gravity sewers shall be tested for allowable deflection. Tests shall be conducted in accordance with the requirements of these Specifications.

Connections between dissimilar gravity pipe materials or diameters shall be made as specified herein.

Connections between pressure pipes shall be made with solid sleeves as specified herein.

The ends of all new sanitary laterals shall be marked by witness posts or protruding galvanized pipe, as directed by the Engineer. Witness posts shall be 4-inch diameter PVC pipe filled with concrete; 4 to 5 feet of the pipe shall be exposed and wrapped with green tape. The 1-inch diameter galvanized pipe shall protrude 1 inch above grade.

The following Standards are referenced in this section:

ASTM C 12	“Practice for Installing Vitrified Clay Pipe Lines”
ASTM C 76	"Standard Specification for Reinforced Concrete Culvert, Storm Drain, and

	Sewer Pipe"
ASTM C 443	"Standard Specification for Joints for Circular Concrete Sewer and Culvert Pipe, Using Rubber Gaskets"
ASTM C 478	"Standard Specification for Precast Reinforced Concrete Manhole Sections"
ASTM C 1107	"Standard Specification for Packaged Dry, Hydraulic-Cement Grout (NonShrink)"
ASTM D 2321	"Standard Practice for Underground Installation of Thermoplastic Pipe for Sewers and Other Gravity-Flow Applications"
ASTM D 3034	"Standard Specification for Type PSM Poly (Vinyl Chloride) (PVC) Sewer Pipe and Fittings"
ASTM D 3753	"Standard Specification for Glass-Fiber-Reinforced Polyester Manholes"
ASTM F 477	"Standard Specification for Elastomeric Seals (Gaskets) for Joining Plastic Pipe"
ASTM F 679	"Standard Specification for Poly (Vinyl Chloride) (PVC) Large-Diameter Plastic Gravity Sewer Pipe and Fittings"
UNI-B-6-98	"Recommended Practice for Low-Pressure Air Testing of Installed Sewer Pipe" Uni-Bell Plastic Pipe Association, Dallas, Texas

18.02 DATA TO BE SUBMITTED

The Contractor shall submit shop drawings in accordance with the General Conditions, Article 36, for the following materials:

Piping materials
Fittings and couplings
Grouting rings
Pipe-to-manhole connectors
Precast manholes
Fiberglass manholes
Castings
Wall sleeves
Special construction methods
Interior cementitious coating (including applicator's certification from manufacturer)

18.03 MATERIALS

All materials shall be furnished by the Contractor, unless otherwise noted on the Contract Drawings. All materials shall be new and of the best quality available. Materials not specifically specified shall confirm to applicable provisions of the FDOT-SSRBC.

18.03.01 Piping Materials

Sanitary sewer pipe shall either be green in color or shall be white with continuous colored green ink lettering or shall be continuously painted green along the top 1/3 of the pipe with 2-part high-build epoxy-polyamide paint. All sanitary sewers shall be installed accompanied by green-colored metallic identification tape laid 1 foot above the pipe, cut every 10 feet.

A. Ductile iron pipe and fittings for force mains or gravity sewers shall conform to the Technical Specifications section headed "Piping Materials: Ductile Iron Pipe."

B. PVC gravity sewer pipe and fittings 4-inch through 15-inch, intended for non-pressure service, shall comply with ASTM D 3034, Type PSM, with a dimension ratio of 35 and a minimum stiffness of 46 psi; or, at the direction of the Engineer, pipe with a dimension ratio of 26 and a minimum pipe stiffness of 115 psi shall be used. Joints and gaskets shall comply with ASTM F 477. PVC fittings for use on 4-inch through 15-inch PVC pipe shall be Harco Gasketed PVC Sewer Fittings as manufactured by Harrington Corp. or approved equal.

   PVC gravity sewer pipe and fittings 18-inch through 27-inch, intended for non-pressure service, shall comply with ASTM F 679, with T-1 wall thickness and a minimum pipe stiffness of 46 psi. Joints and gaskets shall comply with ASTM F 477.

C. PVC pressure pipe and fittings for force mains or gravity sewers shall conform to the Technical Specifications section headed "Piping Materials: PVC Pressure Pipe." Fittings shall be PVC or ductile iron as specified, as directed by the Engineer.

D. High Density Polyethylene (HDPE) pressure pipe for force mains shall conform to the Technical Specifications section headed “Piping Materials: HDPE Pressure Pipe.”

18.03.02 Other Materials

A. Castings for manholes and cleanouts shall be cast iron of the sizes, shapes, and catalog references shown on the Contract Drawings. Where no reference is made on the Contract Drawings, castings shall be equivalent in quality to those manufactured by U.S. Foundry. Unless otherwise noted, all castings shall be designed for an HS-20 truck loading. Castings shall be marked "Sanitary Sewer."

B. Concrete, reinforcing, and masonry for precast, cast-in-place, or site assembled manholes and structures shall conform to the Technical Specifications section headed "Concrete, Masonry, and Reinforcing Steel."

C. Precast manholes shall be manufactured as specified herein and in accordance with the sizes and details shown on the Contract Drawings, and with the approved shop drawings.

D. Fiberglass Reinforced Polyester (FRP) manholes shall be manufactured in accordance with ASTM D 3753, the sizes and details shown on the Contract Drawings, and the approved shop drawings.

18.04 CONNECTIONS TO EXISTING SANITARY SEWERS

The Contractor shall connect new sanitary sewers to existing sanitary sewers as shown on the Contract Drawings and as specified.

All connections to existing sanitary sewers shall be by Flex-Seal Adjustable Repair Coupling Series MR-ARC with Series 316 stainless steel shear rings as manufactured by Mission Rubber Company

or approved equal. All couplings shall be centered between pipe ends and shall be tightened at both ends by Series 316 stainless steel clamps or approved equal.

The Engineer shall be notified at least 2 working days prior to making final connections. The time at which the connections are to be made shall be subject to acceptance by the Engineer.

18.05 CONSTRUCTION OPERATIONS

Pipes shall be laid in open cut, except when another method, such as jacking, augering, directional drilling, or tunneling, is shown on the Contract Drawings, specified, or ordered. Construction shall adhere to the following:

A. No excavations shall be left open over a weekend. All pavement openings shall be completely repaired within 7 days of opening.

B. Sanitary sewers may be constructed in short tunnels to protect trees, shrubs, and existing surface or subsurface utilities and structures. Short tunnels shall be constructed to the lengths shown on the Contract Drawings, specified, or directed by the Engineer. No separate payment will be made for short tunnels.

C. Temporary fences, where required, shall be "wood and wire fence" or other suitable fencing as approved by the Engineer.

D. During the Work, it will be necessary to install the sanitary sewer under or closely adjacent to existing culverts and other storm and water main facilities. Where so indicated on the Contract Drawings, the Contractor shall remove storm drains to permit construction of the sanitary sewer and shall then reconstruct the storm drain. Where removal and reconstruction are not indicated on the Contract Drawings, the Contractor shall protect all existing storm and water main facilities which are shown on the Contract Drawings or located in the field during the Work.

E. Sewers crossing water mains may be required to be constructed of ductile iron pipe, PVC pressure pipe, or heavy wall PVC pipe (SDR 26) as ordered by the Engineer, to conform to DEP and Pinellas County Public Health Unit requirements.

   Sanitary sewers and service laterals which cross under the new water pipe with less than 18 inches clear vertical separation, or which cross over the new water pipe, shall be replaced with ductile iron pipe or PVC pressure pipe, or heavy wall PVC pipe (SDR 26) for 10 feet on both sides of the new water main, or as directed by the Engineer.

F. All ground surfaces disturbed by the Contractor shall be restored to their original condition in conformance to the Technical Specifications section headed "Surface Restoration."

G. Sanitary sewers shall not be cut or pumped around without an approved sanitary sewer pump-around plan and submittal of same, a minimum of 72 hours prior to implementation, to the Water Resources Department Dispatch, 893-7261. The pump-around plan shall include size of pipes and pumps, and discharge location.

H. It is the responsibility of the Contractor to maintain operation of the existing sewerage facilities during construction and repair work. The Contractor shall be responsible for providing any equipment required to maintain operation of service during construction. Any damage done to any existing sewer pipe or structure is to be immediately repaired to a condition equal to, or better than, its original condition.

I. Cutting ductile iron pipe shall be field cut with a power saw. No impact cutting is permitted. The spigot end of pipe thus cut shall be filed or ground to form a bevel.

J. Cutting PVC sewer pipe may be field cut using hand or power saws in accordance with the manufacturer's recommendations. The raw spigot end thus formed shall be filed to remove gasket damaging burrs and to form a standard bevel.

18.06 MANHOLE CONSTRUCTION

18.06.01 Precast Concrete Manholes

Precast manholes shall be constructed in accordance with the details shown on the Plans. Full shop drawing information including design, materials, fabrication details, and installation methods of the proposed precast manholes shall be submitted to the Engineer as specified.

A. Base slabs for precast manholes 48-inch in diameter shall have a minimum thickness of 8 inches as detailed on the Plans. The diameter of the base slab shall be as detailed on the Plans. Reinforcement shall be placed with 2 inches of concrete cover over the top row of steel. Base slabs for precast manholes shall be cast with the lower manhole section and placed on a level, compacted trench bottom.

B. Riser sections, grade rings, and tops shall comply with ASTM C 478 with the exception that Article No. 11 shall be deleted. Base riser sections shall be provided with preformed pipe holes to fit the connectors. The tops of pipe holes shall not be within 4 inches of the bell or socket portion of the riser.

C. Riser joints shall conform to ASTM C 443, to the manufacturer's recommendations and as shown on the Plans. Riser shall be jointed with rubber, plastic, or preformed bituminous joint sealing compound equal to Ram-Nek as manufactured by K.T. Snyder.

D. Manhole sizes up to 10 feet in depth (invert to bottom of brick adjustment ring) shall be a minimum of 48-inch inside diameter for 18-inch diameter and smaller pipe. Manholes over 10 feet in depth shall be the specified diameter for a minimum of 6 feet above the manhole invert; the remaining portion may, at the Contractor's option, be reduced to 48-inch diameter. In no case shall the manhole diameter be less than that required to adequately enclose the sewer pipe.

E. Tops shall have a minimum opening 24 inches in diameter for pipes 18-inch and smaller and 32-inch minimum for pipes 21-inch and larger, with an 8-inch wide flange at the top. For Type I manholes, only concentric cones are acceptable.

F. Top grades of precast manholes shall be established so that a minimum of 3, but no more than 6, courses of brick are placed under the ring and cover casting.

G. Inverts shall be formed using poured-in-place concrete conforming to the Technical Specifications section headed "Concrete, Masonry and Reinforcing Steel" and shall have a minimum strength of 2500 psi.

H. Drop inlets shall be provided where directed by the Engineer or shown on the Plans, and such drop inlets shall conform to details shown on the Plans.

I. A protective coal tar epoxy coating of Carboline (formerly Kop-Coat) Bitumastic 300-M, or approved equal, shall be applied to the exterior surfaces of manholes. One coat shall be applied to the outside and shall yield a final dry film thickness of 9 mils.

J. A dense and durable concrete lining of 100 percent pure fused calcium-aluminate cementitious lining of SewperCoat PG as manufactured by Kerneos Inc., shall be applied in accordance with manufacturer's recommendations, to all interior surfaces of manholes including walls, benches, flow channels, and inverts. Lining shall have a final minimum thickness of 1/2 inch.

K. Manhole wall penetrations for precast manholes shall be as specified for brick manholes.

L. Pipe-to-manhole connections (for New Precast) shall be made with a flexible watertight connector such as Kwik Seal or PSX: Positive Seal as manufactured by Press-Seal Gasket Corporation, or Kor-N-Seal connectors for pipe sizes up to 15-inch and Kor-N-Seal II connectors for pipe sizes 15-inch through 30-inch as manufactured by NPC Inc. Pipe-to-manhole connection shall be installed by the precaster for new manholes, unless specified otherwise.

18.06.02 Fiberglass Reinforced Polyester (FRP) Manholes

The construction of FRP manholes shall conform to the details on the Plans. Full shop drawing information including design, materials, fabrication details, and installation methods of the proposed fiberglass manholes shall be submitted to the Engineer as specified.

A. FRP manholes shall be a one-piece unit consisting of a watertight base and corbel section with a concentric cone, as manufactured by LF Manufacturing, Containment Solutions, or an approved equal.

B. A minimum wall thickness of 0.318 inch shall be used for 48-inch diameter manholes. A minimum wall thickness of 0.50 inch shall be used for manholes larger than 48-inch diameter. All manholes shall have a U/V inhibitor that is homogeneous with the resin mixture.

C. All FRP manholes shall have a minimum 20-year manufacturer’s warranty against corrosion and structural defects. All FRP manholes shall have a minimum AASHTO HS-20 axle loading.

D. Base Slabs: FRP manhole base slabs shall be precast or cast-in-place concrete and shall conform to the thickness specified in the details on the Plans. Cast-in-place concrete base slab reinforcement shall be placed with 3 inches of concrete cover in accordance with Technical Specifications Section 5 headed "Concrete, Masonry, and Reinforcing Steel" Cast-in-place base slabs for FRP manholes shall be cast in place on a level, compacted bottom.

E. Watertight Bottom: The FRP manhole shall have a resin 'fiber-reinforced bottom and a 2 and 1/2-inch-wide anti-floatation flange as a homogeneous part of the bottom section. The manhole bottom shall be a minimum 1/2-inch thick.

F. For FRP manhole depths greater than 10 feet, the manufacturer shall install a minimum of two 1 and 1/2-inch-deep by 3 and 1/2-inch-wide stiffening ribs. Stiffening ribs shall be completely enclosed with resin fiber-reinforcement.

G. FRP manholes shall be anchored to the cast-in-place concrete base slab with 316 stainless steel Kwik Bolt II Wedge anchors and washers as manufactured by Hilti, or approved equal. The size, number of anchors, and embedment depth shall be as shown on the Plans. The anchors shall be installed a minimum of 1 and 1/2 inches from the outer edge of the anchoring flange and shall be equally spaced around the circumference of the manhole bottom.

H. No fiberglass manhole shall have less than 4 feet clear inside height (measured from invert of bench to finished grade.)

I. Inverts shall be as shown on the Plans. A concrete invert may be formed in the field using poured-in-place concrete conforming to Technical Specifications Section 5 headed "Concrete, Masonry, and Reinforcing Steel" and shall have a minimum strength of 2,500 psi.

J. FRP stub outs shall be installed as shown on the Plans or directed by the Engineer, in accordance with approved shop drawings.

K. Pipe-to-manhole connectors for new manholes shall be installed by the FRP manhole manufacturer, unless specified otherwise. Connections for 4-inch through 15-inch pipe shall be made with a Kor-N-Seal boot as manufactured by NPC Inc., or approved equal, and laminated sleeve, as shown in the details on the Plans. Connections of 18-inch and larger shall be with a Link-Seal connector as manufactured by Pipeline Seal & Insulator Inc., or approved equal, and laminated sleeve as shown on the details on the Plans.

L. Laminated sleeves shall be formed using resin and fiberglass of same type and grade as used in the fabrication of the fiberglass manhole. Laminated sleeves may be factory installed or field installed. Field installation shall be by a manufacturer's certified representative or a Contractor-certified person.

M. All holes cut into the FRP manhole shall be by core methods recommended by the manhole manufacturer. A minimum of 12-inch clear wall between cutouts shall be maintained in all directions for each cored hole.

18.07 LAYING AND JOINTING PIPELINES

18.07.01 General

Ductile iron pipelines, PVC pressure pipelines, and HDPE pressure pipelines for force mains shall be laid and jointed as specified in the Technical Specifications section headed "Pressure Pipe Construction." Retainer glands used for PVC force mains shall be UL listed or FM approved and shall have factory certification for pressures up to 188 psi.

PVC, concrete, and FRPMP gravity pipelines shall be laid in conformance to applicable requirements of ASTM C 12 for concrete pipe, ASTM D 2321 for PVC pipe, and ASTM D 3262 and D 4161 for FRPMP.

18.07.02 Line and Grade

Sewers shall be laid to exact line and grade using approved methods consistent with common practice and approved by the Engineer. All line and grade controls shall be furnished by the Contractor. The line and the grade of the sewer, as well as the location of manholes, and all other appurtenances, shall be as shown on the Plans or, as directed by the Engineer. The grade line as given on the Plans indicates the grade of the invert of the sewer pipe. The trench bottom shall form a solid base for the entire length of pipe and shall be capable of supporting the full weight of the pipe and backfill material. The pipe bells shall not bear against the solid bottom of the ditch. Sewers will be inspected with mirrors at intervals during construction and corrected, if necessary, before backfill.

18.07.03 Pipe

Before the pipe is jointed in the trench, the outside of the spigot end and the inside of the bell shall be thoroughly cleaned, wiped, and brushed out to ensure that no dirt or foreign material gets into the finished line. Each pipe shall be inspected for defects and cracks prior to being lowered into the trench. Any cracked or otherwise rejected pipe shall be immediately removed from the site. All pipeline work must be performed in the presence of the Engineer. When work is not in progress, water shall be kept out of the pipe, and the pipe shall be kept closed by means of a test plug. The spigot end shall be centered on grade into the bell end of the last downstream length of pipe, and properly seated. When seating pipe with a pry, lever, or other approved device, care shall be taken to protect the pipe end from damage. Ends damaged in any manner shall be cause for rejection of the pipe.

18.07.04 Service Connections

Service lateral connections shall conform to the Details and shall be installed as indicated or as directed by the Engineer. The Contractor shall locate and record the exact position of such service lateral connections and include actual data on the As-Built Drawings to be furnished to the City.

In new sewer construction, D.I.P. and PVC service connections shall be made by means of a wye or tee. All joints connected to the wye unit shall remain flexible. Service connections on existing mains shall be made using a sewer saddle approved in the Contract Documents and

Technical Specifications. All new sewer service connections shall have a continuous looped trace wire consisting of one (1) 14-gauge minimum solid copper or one (1) 12- gauge copper clad steel tracer wires taped to the top center of the pipe from the cleanout to the main line and back to the cleanout.

Service pipe for all properties shall be laid to the property line and plugged, as shown on the Standard Details. All ends of service lines shall be marked by a permanent stake and where sidewalks or curbs are located nearby, by a chiseled mark cut in the sidewalk or curb. Service pipe shall have a protective cover of not less forty-two (42) inches under all roads and thirty-six (36) inches at all property lines. Inspection of service pipe shall be made before backfill. Service pipe shall have a visibly good line and grade. Shallow service shall be laid by using a four-foot hand level with proper shim attached to one end.
In cases of extra depth where service pipe cannot be laid on a continuous grade to the property line, the Contractor shall then furnish all materials and construct risers as shown on the Plans. When pipe cannot be adequately supported on undisturbed earth, it shall be supported on a concrete cradle. No payment will be made for concrete required to correct conditions resulting from faulty construction methods or negligence.

Service reconnections require adapters for all joints that will not connect properly with ordinary factory joints. Approved pipe cutting methods shall be used to cut any pipe required for the connection. All cut pipe will be ground and smoothed to remove snags and sharp edges. No mortar or collars shall be used on reconnections unless specifically approved by the Engineer.

18.07.05 Watertight Plugs

Watertight plugs of an approved type shall be installed in the ends of all pipe at times when pipe laying is not in progress or as ordered to prevent any contaminated material or vermin from entering the pipe. Pipelines shall be thoroughly flushed out upon their completion and when directed by the Engineer.

18.07.06 Removal of Existing Pipe

Existing pipe no longer in service that is removed from the system shall be disposed of properly by the Contractor. Openings in manholes, sewer lines, or wye branches remaining in place shall be properly plugged and sealed so as to eliminate any possibility of infiltration at the point of separation. All pieces of broken pipe shall be removed from the trench before backfill operations commence. Backfill of the trench shall be as specified in Technical Specifications Section 6- “Excavation and Backfill”. Inspection of structures remaining in place shall be made before backfill.

18.08 TESTING OF SEWER PIPELINES

18.08.01 Pressure Pipelines

Pressure sanitary sewer pipelines shall be tested in accordance with the applicable requirements of Technical Specifications Section 12 headed "Pressure Pipe Construction." Pressure sanitary sewer pipelines shall not be disinfected.

18.08.02 Gravity Pipelines

Gravity pipelines shall be tested for infiltration, exfiltration, deflection, or low pressure air test, at the Engineer's direction. The Contractor shall provide a closed-circuit television video camera inspection, in the presence of the City (or engineer) for all sanitary sewer pipe repairs and all new sanitary sewer construction. The video tape, CD, or DVD shall include time and date, footage, and audio describing any pipe abnormality; also, a CCTV inspection log shall be provided with each completed inspection. Any sewer pipeline found to be unacceptable by the Engineer shall be corrected, repaired, or replaced as directed by the Engineer, at no additional cost to the City.

1. **Infiltration Test**: Upon completion of a section of sewer line, a test for infiltration shall be conducted as directed by the City Inspector. Dewatering of the line to be tested shall terminate at least 2 days prior to the infiltration test. The maximum infiltration allowed in a 24-hour period shall not exceed 200 gallons per inch of diameter per mile of sewer from any section between successive manholes. If the infiltration exceeds the allowable limits, the line shall be further checked and repaired by the Contractor until the infiltration requirements have been met. If any location indicates concentrated infiltration, such location shall be investigated and corrected regardless of the overall infiltration requirement.

   Groundwater level measuring pipes shall be installed at manholes. The groundwater level shall be measured prior to testing. If the groundwater level is at least 2 feet above the highest section of the work being tested, infiltration methods of measurement shall be used. If there is insufficient groundwater head to perform infiltration testing, exfiltration tests will be made.

2. **Exfiltration Test**: If, in the opinion of the City Inspector, the position of a sewer line is above the normal groundwater table, the Engineer may direct the Contractor to perform an exfiltration test. The maximum allowable exfiltration during a 24-hour period shall not exceed 200 gallons per inch of diameter per mile of sewer from any section between successive manholes. An allowance of an additional 10 percent of gallonage shall be permitted for each additional 2 feet of head over a basic 2-foot minimum internal head.

   The exfiltration test shall be performed by plugging the upstream and downstream manholes of the test section, filling the line with water, and maintaining a minimum of 2 feet head of water in the section of line being tested. The rate of exfiltration shall be calculated from the water level drop in the upstream manhole during the 24-hour test period.

3. **Low pressure air test**: At the direction of the City Inspector or Engineer, each pipeline reach may alternatively be tested with air pressure (minimum 3.5 psi, maximum 5 psi) in accordance with UNI-BELL UNI-B-6-98 “Recommended Practice for Low-Pressure Air Testing of Installed Sewer Pipe.” The system passes the test if the pressure drop due to leakage through the pipe or pipe joints is less than or equal to 0.5 psig over the time period described below.

Minimum time period for a 0.5 psig pressure drop

The time period for the test shall be calculated from UNI-B-6-98 as follows:

T = 28.33 DK,
T = Shortest time, in seconds allowed for the air pressure to drop 0.5 psig,
K = .000419 DL, but not less than 1.0,
D = Nominal pipe diameter in inches, and
L = Length of pipe being tested in feet.

4. **Deflection Test**: Prior to final acceptance of the Project, all PVC pipelines shall be deflection tested. The Contractor or a City-approved test lab shall perform the deflection testing at the expense of the Contractor. The deflection test shall be performed a minimum of 7 days after the base has been compacted and sealed.

   The PVC pipe/soil system has been designed so that the maximum installed deflection does not exceed 5 percent and 7.5 percent of the base inside diameter of the pipe as listed in the following table:

Nominal Size (inches)	Base Inside Diameter (inches)	5% Deflection After 7 Days Mandrel (inches)	7.5% Deflection after 30 Days Mandre (inches)
ASTM D 3034 SDR-35			
8	7.665	7.28	7.09
10	9.563	9.08	8.85
12	11.361	10.79	10.51
15	13.898	13.20	12.86
ASTM F 679 TYPE T-1			
18	16.976	16.13	15.70
21	20.004	19.01	18.50
24	22.480	21.36	20.79
27	25.327	24.06	23.43
ASTM D 3034 SDR-26			
8	7.488	7.11	6.93
10	9.342	8.87	8.64
12	11.102	10.55	10.27
15	13.575	12.90	12.56
ASTM F 679 TYPE T-2			
18	17.054	16.20	15.77
21	20.098	19.09	18.59
24	22.586	21.46	20.89
27	25.446	24.17	23.54

The Contractor shall have the option of testing for 5 percent deflection after the base has been compacted and sealed for 7 days; or for 7 and 1/2 percent deflection after the base has been compacted and sealed for 30 days.

If the pipe fails the 7-day, 5 percent deflection test, the Contractor shall immediately conduct a 7 and 1/2 percent deflection test. If the pipe passes the 7 and 1/2 percent deflection test, the Contractor has the option of repairing that section at that time or waiting until a minimum of 30 days after the base has been compacted and sealed and then re-testing for a maximum of 7 and 1/2 percent deflection.

If the pipe fails the 7 and 1/2 percent deflection test after 7 days or at 30 days, the Contractor shall repair that section immediately.

If the Contractor performs the deflection testing rather than employing a City-approved test lab, the following shall apply:

The Contractor shall furnish the mandrel, labor, materials, and equipment necessary to perform the tests as approved by the Engineer. The mandrel shall be pulled through by hand or a hand operated reel in the presence of the Engineer. Prior to performing the deflection tests, the Contractor shall submit to the Engineer certification that the 9-arm mandrels are preset as stated above. Each mandrel shall be engraved with the following:

- Serial Number
- Nominal Pipe Diameter
- Either “ASTM D 3034,” year and either “SDR-35” or SDR-26” or “ASTM F 679,” year and either “Type T-1” or Type T-2”
- Percent deflection as stated above

If the mandrel fails to pass any section of pipe, the Contractor shall excavate and make all repairs (section replacements) necessary to correct the excessive deflection. The Contractor shall then backfill, recompact, reseal the permanent pavement base, and retest the line. If the mandrel fails to pass a second time, the affected section shall be replaced. Re-rounding shall not be permitted.

18.09 SANITARY SEWER PIPE REPAIRS

The contractor shall furnish all labor and materials to repair sanitary sewer pipelines as specified herein

18.09.01 General

A. The Contractor shall excavate and expose suspected damaged pipeline at general locations described by the County. The pipeline shall be exposed for visual inspection four feet on each side of the damaged area or as directed by the County. The City may authorize replacing bad joint materials (vitrified clay or concrete pipe) or removing and replacing the pipe.

B. Crushed stone shall be used in pipe bedding and to help stabilize trench bottoms. Special attention shall be given to compacting the bedding underneath the pipeline and its haunches.

C. Backfilling of repaired pipe shall proceed only in the presence of the Inspector.

18.09.02 Vitrified Clay Pipe Repairs

A. Repairs to VCP including cracked or crushed pipe, cracked bells, offset joints, holes, etc. shall be accomplished by replacing a section of damaged pipe with a piece of new C-900 PVC pipe. Such replacement shall be performed in accordance with the clay pipe manufacturer's recommendations. PVC repair sleeves shall be supplied by Contractor.

18.09.03 Iron Pipe Repairs

A. Repairs to iron pipe shall be accomplished by one of two methods
   1. Application of an appropriate repair sleeve
   2. When the damaged area is larger than recommended for repair sleeves, the damaged section will be cut out and replaced with a section of new ductile iron pipe or PVC, as specified by the Engineer.

B. The connections of new and old pipe shall be accomplished with two new ductile iron solid sleeves. All iron pipe repair work shall be performed in accordance with the manufacturer's recommendations. All repairs, including sleeves, shall be wrapped in polyethylene encasement.

18.09.04 Reinforced Concrete Pipe Repair

A. Reinforced concrete pipe repair shall be accomplished by the use of a reinforced concrete collar. Reinforcing shall be circumferential with a minimum cross-section area as specified in ASTM Des: C76 for Class V, R.C.P. of the same diameter as the damaged pipe. For damaged areas less than two feet in diameter, the collar may be the sole element of repair. A cutout of corrugated metal pipe shall be placed over the damaged area only to aid in the formation of the collar. The collar shall extend three hundred sixty (360) degrees around the pipe and two feet past the damaged area and corrugated metal in the longitudinal axis.

B. For larger repairs, the collar shall be used as a closure. The damaged pipe length shall be removed and become the property of the Contractor. The replacement length may be jointed with the existing pipe on one end only. The existing portion of the joint shall be thoroughly cleaned, and the rubber gasket replaced. After fully seating the joint, the other end shall receive a concrete collar closure extending two feet past the joint in the longitudinal direction. If the new and existing joints are not identical, the closure shall be used at both ends.

18.09.05 Polyvinyl Chlorine Pipe Repair

A. For non-pressure applications, existing and new pipe shall be jointed with flexible couplings with stainless steel straps as approved in these Technical Specifications. Only the flexible

coupling recommended by the manufacturer for the particular pipes to be jointed shall be used

B. For pressure pipe applications, repairs shall be made by one of the two methods as specified for iron pipe, except replacement pipe shall be PVC pressure pipe.

18.09.06 Final Acceptance

A. In the case of pressure pipe applications, after the pipe repair is complete and still exposed, the pipeline will be placed in service. Visual inspection, by the Engineer, of the repair while the pipeline is pressurized will provide tentative acceptance of the repair, provided no leaks are present. Repair of leaks or unsatisfactory work shall be performed at no cost to the City. Final acceptance will be granted after proper backfilling and surface restoration is accomplished.

B. In the case of non-pressure service, the Contractor shall backfill and have the line inspected by a City Inspector. The line shall be inspected by one of two methods: (1) inspection by mirrors and sunlight and/or (2) television inspection as directed by the Engineer.
   1. Upon submission of inspection video records via USB the City will review and verbally respond within one working day. If the repair is not satisfactory to the Engineer, the Contractor will, at no cost to the City, re-excavate, make repairs, television inspect and backfill.
   2. When the repair is satisfactory to the Engineer, the Contractor will be directed to complete surface restoration. Upon satisfactory completion of surface restoration, final acceptance will be granted.

END OF SECTION

SECTION 20 – WASTEWATER SYSTEM CCTV INSPECTION AND CLEANING

20.01 SCOPE OF SERVICES AND WORK PHASING FOR SYSTEM CCTV INSPECTION AND PIPE CLEANING

A. The purpose of this bid is to obtain competitive unit prices for all labor, material, and equipment necessary to inspect via closed-circuit television (CCTV) and clean existing sanitary sewers ranging in size from 6 to 24-inch diameter. The work includes hydraulic root cutting and cleaning, grinding protruding break-in service connections, remote televising and recording of the sewer location and condition. All project locations will be within the City's service area.

B. All City assets will be identified using the established facility identification code (FID) for all inspection reports, geographical exhibits, data sets and asset management tasks. Assets may include, but not be limited to, manholes, clean outs, gravity mains, force mains, air release valves, and conflict structures. Asset FIDs will be provided to the Contractor prior to the start of inspection. Failure to utilize the FID could result in additional inspection at the Contractors expense.

C. Compliance with this contract shall be complete when all conditions set forth in these specifications have been met. The work to be completed on each section of sewer will be performed as applicable and in phases as defined in the following:

20.01.01 PHASE 1: PRE-CLEANING INSPECTION

A. The preferred method for Pre-Cleaning Inspection is color CCTV conforming to NASSCO Pipeline Assessment Certification Program (PACP), and for the data to be exported electronically in a PACP certified format. The data must be shown in an Asset Management and Viewing Software that is accessible to the City of St. Pete Beach. Since this inspection is performed prior to cleaning, it is understood that the video may not provide an "unobstructed view of the entire pipe".

B. The Contractor may propose other methods to the City prior to bid for inspection such as, zoom camera inspection, digital sidewall scanning inspections, acoustical technology, etc.

C. If the Contractor is performing the Pre-Cleaning Inspection, the method must be pre-approved by the City prior to inspection of the sewer interior.

D. It is not the intent of this specification to require bypass pumping to control heavy flow; however, the Contractor must, at a minimum, make reasonable effort to control the flow by using flushing equipment. See this specification for sequencing of cleaning and inspection during heavy flow

scenarios. The Contractor must also consider weather conditions to obtain the best video image of the sewer. This may require the Contractor to delay any video work after major rain events until the system can return to lower dry weather flow.

E. Based on the quality of the results, the City can reserve the right to reduce the scope of the Phase 1 Pre-Cleaning Inspection.

20.01.02 PHASE 2: CLEANING DETERMINATION

Based on the City and Engineer's review, he or she will determine if cleaning or any additional work will be required. At the sole discretion of the City it is to either declare the work on the particular sewer segment complete or notify the Contractor of additional work (i.e. Phase 3: Light Sewer Cleaning, Heavy Cleaning, Deposit Cut, Root Cut Medium, Root Cut Ball, or Lateral Cut)

20.01.03 PHASE 3: SEWER PIPE CLEANING

The Contractor shall perform the assigned additional work, which may include, but is not limited to the following items as defined in these specifications: Light Cleaning, Heavy Cleaning, Root Cut Medium, Root Cut Ball, Deposit Cut, or Lateral Cut.

20.01.04 PHASE 4: POST CLEANING INSPECTION

Final televising of the sewer segments determined by the City include evaluating the condition of the sewer segments after all cleaning has been performed in Phase 3.

A. The recorded video must show the entire circumference of the sewer. Any flow control to remove standing water and debris shall be incidental to the contract. The Contractor shall submit PACP data to include the electronic video reports, logs, etc. for the City's review.

B. The data must be shown in an Asset Management and Viewing Software that is accessible to the City of St. Pete Beach. The Contractor shall provide up to three software licenenses to the City and the Engineer which shall include, but not be limited to, viewing, editing, and exporting capabilities of all inspection data.

C. The segments of sewer to be cleaned and televised through this contract will be located primarily within the paved areas of the public right-of-way; however, there may be some sewer segments that are located within public easements on private property. The successful bidder, with assistance of the City as required, will be responsible to coordinate and gain access to any and all sewer segments and will be responsible for any restoration in accordance with technical specification Section 07 "Surface Restoration". This will include written authorization between

Contractor and landowner. It is the City's right to omit segments that are adequately covered in the Pre-cleaning Inspection video.

20.02 COMPLIANCE AND ACCEPTANCE

Compliance with this contract shall be complete when all conditions set forth in these specifications have been met. The following defines each work item, the level of effort, and quality of work that will be necessary to meet the intent of this specification:

20.02.01 PRE-CLEANING INSPECTION

A. The preferred method for Pre-Cleaning Inspection is color CCTV conforming to National Association of Sewer Service Companies' (NASSCO) Pipeline Assessment Certification Program (PACP), exported electronically in a PACP compliant format. Other methods for inspection, including CCTV, zoom camera inspection, digital sidewall scanning inspections, acoustical technologies, etc. must be preapproved by the City prior to inspection of the sewer interior.

B. Should the level or type of debris differ from the original inspection, the work type can be adjusted by the City to the proper work type and the work shall be paid at the adjusted, proper rate. The Contractor shall be responsible for providing evidence of the change in conditions to the City.

20.02.02 LIGHT SEWER CLEANING (EACH SEGMENT)

A. The Contractor shall clean the sewer and associated manholes, including drop connections and benches, with hydro-jetting equipment. This will require an unlimited amount of passes and a minimum of two passes of high-velocity hydro-jetting equipment to remove all loose debris and collect it for removal in the downstream manhole. The first pass shall be restricted to 800 psi at the nozzle head, and the second and subsequent passes shall be at 1200 psi. All debris must be removed from the sewer, including any debris that may have been washed up into any service connections (does not include known pre-existing conditions in service connections), drop connections or the bench wall of the manholes. This item does not include any root cutting, deposit removal, or grinding of protruding service connections.

20.02.03 HEAVY SEWER CLEANING (EACH SEGMENT)

A. Pipes that cannot be cleaned by the methods described in the Light Sewer Cleaning sub-section shall be cleaned with rotating nozzle equipment. This also includes Deposits Attached Grease (DAGS) if able to remove with rotating nozzle or other mechanical means; not to

include saws or cutters. Compliance with this section requires substantial effort towards cleaning.

B. Under this bid item, the Contractor shall remove all obstructions in the sewer. All debris must be removed from the sewer, including any debris that may have been washed up into any service connections (does not include known pre-existing conditions in service connections), drop connections or the bench wall of the manholes. This includes all grease, rocks, debris, sticks, etc. that will reduce the hydraulic capacity of the sewer and limit future maintenance access of remote equipment. This work will include an unlimited number of passes by high velocity rotating nozzleequipment in conjunction with specialty cleaning equipment. All pipes shall be restored to at least 95 percent of their nominal diameter. Joint sealant shall be removed to within ¼ inch of the pipe wall. Removal of excessive joint sealant will generally not be required until just prior to lining of the pipe segment (if necessary), unless the joint sealant prevents the passage of the CCTV equipment. The Contractor shall be responsible for any damage to the sewer or any service connections. This item does not include cutting/grinding protruding break-in connections, as that work will be paid under a separate bid item.

C. The Contractor shall maintain detailed documentation of cleaning efforts made to remove these items. Such documentation shall be made available to the City at any time.

D. The Contractor shall immediately notify the City if he believes that this level of cleaning will cause a sewer collapse due to the existing deterioration of the host pipe. The City's determination whether to continue or stop work is final.

20.02.04 ROOT CUT (EACH SEGMENT)

A. Root Cut Medium - Removal of Roots Medium (RM), and Root Balls (RB) in one or two joints.

B. Root Cut Ball – Removal of Root Balls (RB) removed in at least 3 joints.

C. The City shall determine if the sewer segment requires root cut cleaning. All roots must be screened, collected, and removed from the sewer for proper disposal.

D. The Contractor shall immediately notify the City if he believes that these activities performed under this paragraph will cause a sewer collapse due to the existing deterioration of the host pipe. City's determination whether to continue or stop work is final.

20.02.05 DEPOSIT CUT (EACH SEGMENT)

A. Removal of Deposits Attached Encrustation (DAE) and Deposits Attached Grease (DAGS) that require a cutter to remove.

B. Under this bid item, the Contractor shall remove all obstructions in the sewer. All debris must be removed from the sewer, including any debris that may have been washed up into any service connections (does not include known pre-existing conditions in service connections), drop connections or the bench wall of the manholes. This includes all deposits, grease, debris, sticks, etc. that will reduce the hydraulic capacity of the sewer and limit future maintenance access of remote equipment. This work will include an adequate number of passes using high velocity hydro-cleaning equipment required to produce a clean pipe in accordance with these specifications. A mechanical/hydraulic root, chain cutter, etc. may be used where necessary at no additional cost to the City; however, the Contractor shall be responsible for any damage to the sewer or any service connections. This item does not include cutting/grinding protruding break-in connections, as that work will be paid under a separate bid item

C. Compliance with this section requires substantial effort towards cleaning, chipping, cutting, grinding, etc. to remove hardened deposits, grease, etc. The Contractor shall use remote CCTV equipment to monitor the progress of the work and ensure that the sewer is not damaged.

D. The Contractor shall immediately notify the City if they believe that activities performed under this paragraph will cause damage due to the existing deterioration of the host pipe. The City's determination whether to continue or stop work is final.

E. The Contractor shall maintain detailed documentation of cleaning efforts made to remove these items.

F. If attached deposits cannot be removed by tools normally used in the industry, the City should be consulted immediately. The City and the Contractor should discuss whether to cancel the work on that segmentation or negotiate a flat rate or hourly rate for the Contractor to do the work.

20.02.06 LATERAL CUT (EACH SEGMENT)

A. Removal of protruding laterals shall comply with Specification 36 and the requirements outlined below.

B. Removing protruding laterals, excludes DIP, SP, CAS etc.

C. The City shall determine when break-in service connections will require grinding based on his review of the initial survey television inspection. The Contractor shall cut/grind the protruding service connection by using a remote grinding/cutting device capable of removing, concrete, vitrified clay, PVC and other types of pipe material. The device shall be specifically designed to cut/grind protruding service connections. The Contractor shall use remote CCTV equipment to monitor the progress of the work and ensure that the service connection is not damaged.

D. The protruding break-in service connection shall be cut/ground flush to the main sewer pipe without scouring or damaging the main sewer or service connection. All cuttings must be screened, collected, and removed from the sewer for proper disposal.

E. During the final survey television inspection, the Contractor shall slowly pan the entire circumference of the trimmed connection to verify the quality of the work.

F. The Contractor shall immediately notify the City if he believes that the pipe is not structurally sound. The Contractor and City shall discuss the severity and risk of cutting/grinding the lateral. The City shall then determine, if they want the lateral cut/ground, at the City's risk, or if the work should not be performed on this contract.

G. If other than typical lateral materials are encountered, the Contractor shall notify the City and the City and Contractor should discuss the ability, costs and risks associated with cutting/grinding the lateral. The City shall decide whether to cut/grind the lateral or to not cut/grind the lateral. If the City decides to cut/grind the lateral, the price should be negotiated between the City and Contractor, prior to cutting/grinding the lateral.

20.02.07 DEBRIS RECORDS

The Contractor shall keep records of types of debris, removed from each segment of pipe and provide these records to City in the format requested by City.

20.02.08 FINAL SURVEY TELEVISION INSPECTION

As in the initial survey television inspection pay item, CCTV inspections will be conducted entirely in digital format.

All CCTV work shall conform to the most current NASSCO PACP standards. The documentation of the work shall consist of NASSCO PACP CCTV Reports, Unmodified NASSCO PACP database, logs, electronic reports, etc. noting defects and observations encountered during the inspection.

All City assets will be identified using the established facility identification code (FID) for all

inspection reports, geographical exhibits, data sets and asset management tasks. Assets may include, but not be limited to, manholes, clean outs, gravity mains, force mains, air release valves, and conflict structures. Asset FIDs will be provided to the Contractor prior to the start of inspection. Failure to utilize the FID could result in additional inspection at the Contractors expense.

Acceptance of pipe segment cleaning shall be made upon the successful review of the CCTV inspection by the Engineer. If the CCTV inspection shows the cleaning to be unsatisfactory, the Contractor shall be required to repeat the cleaning and CCTV inspection of the pipe segment until the cleaning is shown to be satisfactory. Such repeat cleaning and CCTV inspection shall be made at the Contractor's expense.

20.03 CLEANING EQUIPMENT

A. The wastewater system shall be cleaned with industry standard truck-mounted high velocity hydro-cleaning equipment. No mechanical bucket machinery will be acceptable for the cleaning process. The equipment shall be provided with a minimum of 500 ft of one-inch 10 high-pressure hose with a selection of high velocity nozzles, as required for the cleaning and heavy cleaning operations. The equipment shall have a minimum usable water capacity of 1000 gal. The pumps shall be capable of delivering a minimum 60 gpm at 3000 psi. Pressure to the nozzle shall be regulated by a relief valve, adjustable from a to 1,500 psi minimum. The nozzles shall produce a scouring action from 15 to 45 degrees in all size pipes to be cleaned. The equipment shall carry its own 1,000 gal water tank capable of holding corrosive or caustic cleaning or sanitizing chemicals, engines and pumps, and a hydraulically-driven hose reel. The equipment shall also include a high velocity washing hose for ancillary cleaning of the walls and floor of manholes. The hose shall have an adjustable nozzle capable of producing flow from a fine spray to a solid stream. All controls shall be located so that the equipment can be operated above ground. During hydro-cleaning, the Contractor shall restrict the flow level in the pipe to a maximum of 50 percent of the pipe diameter. Particular care should be taken to avoid flooding house connections during hydro-cleaning operations.

B. The Contractor shall provide equipment capable of removing all sand, dirt, rocks and other debris from the pipe segment to allow unobstructed remote CCTV inspection of all internal pipe surfaces.

C. The Contractor shall certify that backup cleaning equipment, including machines, devices, tools, etc, is available and can be delivered to the site within 24 hours.

D. Any blockages of building service connections resulting from the cleaning or other items of work shall be removed by cleaning of the building connection by the Contractor, at his own expense. Any damage caused by flooding of building service connections shall be corrected by the Contractor, at his own expense.

E. The Contractor shall provide specialty equipment capable of mechanically removing all attached,

hardened and/or cemented debris including, but not limited to, roots, grease, calcification, tuberculation, joint sealant, other hardened or tightly adherent deposits, etc. which cannot be removed by the use of industry standard high velocity hydro-cleaning equipment alone. Specialty equipment shall include, but is not limited to, a root saw, spring blade root cutter chuck or approved equal.

20.04 REFERENCED DOCUMENTS

A. All work must also conform to the latest edition of the following specifications:

1. State Department of Transportation, Construction and Materials Specification.
2. Rules and Regulations and Standard Drawings.
3. Rules and Regulations of the Office of the County/City Engineer.
4. If there is a difference in these specifications, the Rules and Regulations shall govern, DOT Specification.
5. NASSCO PACP Standards.
6. Other standards as appropriate.

B. Notification

1. If observed defects are believed to be such that further cleaning operations may compromise the structural integrity and/or cause the pipe to become unusable, the Contractor must provide written communication to the City's designee of the observed condition(s) and reason to believe that continued cleaning operations may cause substantial damage. The City will then direct the Contractor as to what services, precautions, etc., the City will require of the Contractor. If the contract documents do not address this potential, then the City and Contractor will negotiate in good faith, the conditions under which the work is to continue or cease to continue.

2. This exception may only be used to prevent asset damage and shall not be used to eliminate difficult or adverse cleaning areas that were previously documented in these documents or by prior written communication with the City.

20.05 GENERAL EXECUTION

A. The Contractor shall furnish and maintain, in good condition, all cleaning and televising equipment necessary for proper execution of the work.

B. Maintaining Flow: It will be the responsibility of the Contractor, throughout the tenure of this contract, to provide and maintain sufficient flow at all times to pass any flash of storm flow of drainage ditches and prevent any backwater flooding due to obstruction caused by cleaning or CCTV equipment.

C. Retrieval of Materials and Equipment: It shall be the Contractor's responsibility to remove

materials and equipment that has been lodged in the sewer from cleaning, television inspection, or point repair excavations.

D. After determining the preliminary requirements and the feasibility of effective CCTV inspection, the Contractor shall thoroughly clean all required pipe segments as required to permit an unrestricted inspection by industry standard CCTV inspection equipment. Particular emphasis shall be afforded the removal of accumulated grease, roots, sand, rocks, bricks, sludge and other debris so that the CCTV inspection will clearly show all portions of the pipe being inspected. Acceptance of pipe segment cleaning shall be made upon the successful completion of the CCTV inspection and shall be defined as removing sufficient material to permit an unrestricted view of the pipe internal surfaces and to ensure an effective rehabilitation of the pipe segment, all to the satisfaction of the Engineer.

E. Except during drought conditions, water required for the cleaning will be provided by the City or County at locations to be specified by the City. The City or County shall furnish and install water meters at all points where water is drawn from the City's supply. The City or County will charge a fee for the water used. A backflow prevention device shall be used to prevent contamination of the potable water system. The Contractor is responsible for any damage resulting from improper operation of hydrants. Do not use or obstruct a fire hydrant when there is a fire in the area.

F. The Contractor shall not waste water from the public water supply because of improper connections or from hydrants left open.

G. The Contractor shall remove all bricks, rocks, debris, sludge, dirt, sand, grease, roots and other materials from the pipe segment ordered to be cleaned and collect and remove the resulting debris from the downstream manhole of the pipe segment. Passing waste material between manholes, causing accumulations of sand, system stoppages, or damage to the pumping equipment shall not be permitted. When necessary, a dam trap or weir and screen shall be temporarily installed in the downstream manhole in such manner that debris and solids shall be trapped and retained for subsequent removal.

H. Waste and debris cleaned from the pipe segment shall be removed at the downstream manhole by pumps or other means. The discharge and drainage stream shall be returned downstream to the wastewater collection system for disposal. Under no circumstances shall wastewater or solids be dumped onto the ground surface, street, or into ditches, catch basins or storm drains. All solid and semi-solid debris resulting from the cleaning operations shall be removed from the site and taken to the wastewater treatment facility to which the debris would have arrived in the absence of the cleaning operation, unless directed otherwise. The Contractor is responsible for transporting the debris and must remove and properly dispose of excess water from the debris prior to disposal at the City's wastewater treatment facilities.

I. Where access to manholes in easements and rights-of-way is required, the Contractor shall obtain permission from the homeowner for equipment access.

J. Barricades and warning signs shall be used in work areas and around open manholes. The Contractor shall furnish and maintain traffic controls and safety devices as required.

K. Employ satisfactory precautions to protect the pipe and manholes from damage that might be inflicted by improper selection of the cleaning process or improper use of the equipment. Immediately notify Engineer if fresh soil, pieces of pipe, or other visible signs of potential problems occur during cleaning operation. When using hydraulically propelled devices, take precautions to ensure that the water pressure created does not cause damage or flooding to public or private property. Do not surcharge the wastewater beyond the elevation that could cause overflow of wastewater into area waterways or buildings, or onto the ground.

L. The Contractor shall clean upstream reaches of the system before the downstream reaches are cleaned. Hydro-cleaning equipment shall be inserted in the downstream manhole of the pipe segment, and the cleaning work shall proceed from upstream to downstream. Winching equipment used shall not damage the pipe or manholes.

20.06 SUBMITTALS

A. All submittals shall comply with Specification Section 03 - Submittals and are due as scheduled. Work will not proceed until all submittals are received and approved. The project manager reserves the right to adjust the due dates of the submittals based on Contractor performance. The Contractor shall label each submittal indicating what is represented, name of Contractor, and project number. All submittals identified as being in error shall be re-performed and corrected at the Contractor's expense.

B. Submittals Required with Bid Documents include:

1. List of references per specifications
2. Documentation of Certification of PACP Software
3. Asset Management and Viewing Software

C. Submittals required seven (7) days prior to the Pre- construction Meeting for CCTV Inspection or Pipe Cleaning

1. Name of the project supervisor and resumes.
2. Documentation of NASSCO PACP certification for all CCTV operators, database and software.
3. Site Safety Plan. A complete generic site safety plan must be submitted one week prior to the pre-construction meeting. Work will not begin until an approved site safety plan is in place.
4. Sample inspection CCTV data and video or data from other approved inspection method.
5. Acknowledgment of required nomenclature utilizing the provided FID

D. Submittals Required for the Pre-construction Meeting

1. An initial comprehensive schedule of work to be approved by the City.
2. Management Organization: Provide an organization chart depicting the essential organizational elements and senior personnel of the proposed Contractor and the functions and interrelationships of the personnel proposed to provide technical support, project management and supervision for this project. Provide succinct resumes of the personnel proposed to provide technical support and project management for this project. The personnel designated in the management summary for essential positions shall not be changed except with the permission of City. The City will only approve such a change when, in its opinion, the substitute personnel have equal or greater qualifications and experience to those intended to be replaced.
3. Proof that Contractor is an approved/bonded Contractor with the City.

E. Submittals Required One Week Prior to Any Cleaning & Televising Work

1. Site specific site safety plan addenda.
2. Entry releases, if applicable

F. Weekly Submittals

1. Detailed updates to the work schedule will be provided to the project manager no later than 1:00 p.m. on the Friday preceding the next week's cleaning and televising work.
2. USB External Storage Drive with CCTV videos, logs, and / or electronic worksheets submitted 7 days prior to work). All field paperwork must be submitted before the Contractor’s invoice will be processed for payment.
3. Corrections to punch list items as required by the project manager to fulfill the requirements of this specification.

G. Final Submittals Prior to Payment

1. Corrections to punch list items as required by the City to fulfill the requirements of this specification.

20.07 OWNER RIGHTS

A. The City reserves the right to stop the work when, in the project manager's judgment, the Contractor's work or activities are threatening the health and safety of the public or endangering the environment or endangering the waters of the state. Work shall not proceed until a satisfactory resolution has been achieved, as determined in the sole and unfettered opinion of the City.

B. The Contractor or Subcontractor shall not perform any work which is not specifically identified in the work schedule unless approved by the City. Notification of such work must be received no later than 8:00 a.m. on the day the work is to be performed. A list of persons available to be notified will be given at the pre-construction meeting.

20.08 EMERGENCY RESPONSE

The Contractor shall provide a telephone number and pager number to the City. These numbers are intended for the project manager's use in contacting the evening/weekend/holiday emergency work crew for emergencies resulting from the Contractor's actions or lack thereof during this project. This crew shall be responsible for contacting the City within one-half hour after the first verbal or electronic notification. If the Contractor's crew has not responded to the site of the emergency within one hour of the first summons, verbal or electronic, the City will make all necessary repairs and bill the Contractor for all work performed. Costs related to the emergency response will be incidental to the contract and not measured for payment.

20.09 SEQUENCE OF INSPECTION AND CLEANING

A. The Contractor shall coordinate with the City and any Jurisdictions required to isolate any pipe segments with significant flow that would prohibit cleaning and inspection. The cleaning and inspection of the pipe segment shall be done outside of peak hour flows. The steps to clean and inspect the pipe segment include:

1. The lift/pump stations contributing flow into the sewer line to be inspect and cleaned must be pumped down.
2. Once stations are pumped down, the stations shall be turned off and the sewer line must be plugged to allow work to commence.
3. The Contractor must monitor the levels within the stations at all times while work has started with City personnel present.
4. After inspection and cleaning within the pipe segment is completed, the plug shall be removed and the stations shall be restarted to be pumped down again.
5. Repeat steps 1-4 for each segment of sewer line to be cleaned or inspected.

B. The Contractor is responsible for the operation and maintenance of the bypass systems.

C. The Contractor shall perform all work associated with bypassing without causing damage to existing improvements to remain, and without causing a spill of sewage outside the sewer system. Any damage results from the Contractor's work shall be repaired or replaced to the satisfaction of the City, and at no cost to the City. All fines, and costs associated with the cleanup of spills, shall be the responsibility of the Contractor.

END OF SECTION

SECTION 21 – CURED-IN-PLACE-PIPE (CIPP)

21.01 GENERAL

It is the intent of this section of these Specifications to provide for the reconstruction of pipelines and conduits by the installation of a resin-impregnated flexible tube that is either inverted or pulled into the original pipeline/conduit and expanded to fit tightly against said pipeline by the use of water or air pressure. The resin system shall then be cured by elevating the temperature of the fluid (water/air) used for the inflation to a sufficient enough level for the initiators in the resin to affect a thermosetting reaction.

The Contractor shall furnish all materials, labor, equipment, and services necessary for liner installation including: traffic control, pump around pumping and/or diversion of wastewater flows, cleaning and closed circuit television video (CCTV) inspection of the pipe segment to be lined, service lateral reconnection, final CCTV inspection and testing of lined pipe system, surface restoration, and cleanup of the Work site.

The Contractor is advised that this Contract requires work in active wastewater collection systems and shall follow all federal, state and local requirements for safety in confined spaces. The Contractor shall conform to all guidelines by the Occupational Safety and Health Administration (OSHA) Federal Regulations; 29 CFR Ch. XVII, Section 1910.146 Confined Space Entry.

21.02 REFERENCE DOCUMENTS

This Specification references ASTM D5813 (Standard Specification for Cured-in-Place Thermosetting Resin Sewer Pipe) ASTM F1216 (Standard Practice for Rehabilitation of Existing Pipelines and Conduits by the Inversion and Curing of a Resin-Impregnated Tube), ASTM F1743 (Standard Practice for Rehabilitation of Existing Pipelines and Conduits by Pulled-In-Place Installation of Cured-In-Place Thermosetting Resin Pipe), and ASTM D3839 (Standard Practice for Underground Installation of “Fiberglass” (Glass-Fiber Reinforced Thermosetting Resin) Pipe).

21.03 QUALIFICATION REQUIREMENTS

The system proposed (materials, methods, workmanship) must be proven through previous successful installations to an extent and nature satisfactory to the City and the Engineer that is commensurate with the size of the project being proposed. Since CIPP is intended to have a 50-year design life, only products deemed to have this performance will be accepted. All products and installers must be pre-approved prior to the formal opening of proposals.

Products and Installers seeking approval must meet all of the following criteria to be deemed commercially acceptable:

For a Product to be considered Commercially Proven, a minimum of 250,000 linear feet and/or 1000 line sections must have been successfully installed in North America. The Manufacturer (Li–censor) shall have completed sufficient enough testing to document that the materials and the method(s) of installation proposed will produce the desired long-term performance. All products used shall conform to the Contract Documents and these Technical Specifications. Chemical grout designed for injection shall be: AV -100 chemical grout as manufactured by Avanti International, or approved equal.

For an Installer to be considered Commercially Proven, the Installer must satisfy all insurance, financial, and bonding requirements of the City, and must have at least three years active experience in the commercial installation of the product bid. The Installer's key personnel shall have at least 100,000 linear feet and/or 300 line sections of successful experience (included in this experience shall be a sufficient quantity of installations in the sizes proposed for this project). The Installer shall be "ISO" certified or demonstrate that he/she has a similar quality assurance system in place. Additionally, the Contractor shall be certified and/or licensed by the liner manufacturer(s) as an approved installer for the products referenced in this specification

Documentation for products and installers seeking pre-approved status must be submitted no less than two weeks prior to the proposal due date to allow time for adequate consideration. The City will advise of acceptance (or rejection) a minimum of three days prior to the due date. All required submittals must be satisfactory to the City.

21.04 SUBMITTALS

The Contractor shall submit the following information:

1. Manufacturer's certification that the materials to be used meet the referenced standards and these specifications.

2. License or certificate verifying Manufacturer's/Licensor's approval of the installer.

3. Proposed equipment and procedures for accomplishing the work.

4. Lining Manufacturer's product data and instructions for resin and catalyst system.

5. Contractor's procedures for sealing CIPP liners from groundwater infiltration/migration at manholes. Details of all component materials and construction details such as hydrophilic rubber seals.

6. Manufacturer's or Assembler's guidelines for storage procedures and temperature control, handling and inserting the liner, curing requirements and details, service connection methods, and trimming and finishing.

7. Manufacturer's or Assembler's guidelines for minimum and maximum pressures, temperatures, and time durations to be used during liner inversion, cure, and cool down. 8. Procedures for cool down and relieving static head after the CIPP liner is cured

8. Manufacturer's or Assembler's guidelines for factory and/or field (whichever applies) wet out procedures including: volume of resin per unit of liner, roller gap setting, mixing ratios and procedures for resin and catalyst/hardener, shelf life of resin, pot life of resin, and required wet out procedure to ensure full saturation.

9. The Contractor shall also provide field measurements and liner sizing calculations which demonstrate the liner wall thickness design for each pipe segment and that the liner has been properly undersized to avoid the creation of wrinkles or folds. Tabular liner wall thickness calculations shall be provided for each pipe diameter in no less than 1-foot increments from 1 foot to 6 feet cover depth and in 2-foot cover depth increments thereafter. The tabulated liner wall thickness

for each pipe diameter/cover depth interval shall be the maximum wall thickness calculated over the cover depth interval. Special liner wall thickness calculations shall be submitted for installations with less than 3 feet of cover. The liner wall thickness shall be increased as required based on actual pipe ovality determined by the pre-installation CCTV inspection.

10. The Contractor shall submit pump around pumping and/or diversion plans to the Engineer a minimum of 14 days prior to the needed use for review and approval. In some cases verbal confirmation of the plan and approval with the Engineer or City Inspector may be used in lieu of a written plan. The Contractor shall notify the Engineer a minimum of 48 hours prior to commencement of the pump around operation. Failure to receive approval by the Engineer or City Inspector may result in the Contractor's Work being halted at no cost to the City.

11. The Contractor shall submit drawings that identify the liner insertion, pump around pumping locations and methods with sufficient detail to assure that the Work can be accomplished without spill or discharge of wastewater. The pump around pumping plan shall include an emergency response plan to be followed in the event of a failure of the pumping system.

21.05 MATERIALS

21.05.01 The Tube

The tube shall consist of one or more layers of a flexible needled felt or an equivalent nonwoven or woven material, or a combination of nonwoven and woven materials, capable of carrying resin and withstanding the installation pressures and curing temperatures. The tube should be compatible with the resin system to be used on this project. The material should be able to stretch to fit irregular pipe sections and negotiate bends.

The tube should be sewn or flame-bonded to a size that, when installed, will tightly fit the internal circumference and the length of the original conduit. Allowances should be made for the longitudinal and circumferential stretching that occurs during placement of the tube.

The tube shall be uniform in thickness and when subjected to the installation pressures will meet or exceed the designed finish wall thickness.

Any plastic film applied to the tube on what will become the interior wall of the finished CIPP shall be compatible with the resin system used, translucent enough that the resin is clearly visible, and shall be firmly bonded to the felt material.

The outside of the tube shall be marked for distance at regular intervals along its entire length, not to exceed 5 feet. Such markings shall also include the lining manufacturer’s name or identifying symbol.

Seams in the tube shall be stronger than the non-seamed felt.

The minimum tube length shall be that deemed necessary by the Contractor to effectively span the distance from the inlet to the outlet of the respective manholes or access points, unless otherwise specified. The Contractor shall verify the lengths in the field before impregnation of the tube with

resin. An individual tube insertion operation may be made over multiple contiguous pipe segments as determined in the field by the Contractor and reviewed by the Engineer.

21.05.02 The Resin System

The resin system shall be a corrosion resistant polyester, vinylester, or epoxy and catalyst system that when properly cured meets the minimum requirements given herein or those that are to be utilized in the design of the CIPP for this project. Resin shall not be subjected to ultraviolet light and shall form no excessive bubbling or wrinkling during lining.

21.06 STRUCTURAL REQUIREMENTS

The design thickness of the liner shall be arrived at using standard engineering methodology. ASTM F1216, Appendix X1, has such an acceptable methodology that may be used where applicable. The long-term flexural modulus to be used in the design shall be verified through testing. The long-term modulus shall not exceed 50% of the short-term value for the resin system unless the tube contains reinforcements. In the event that a reinforced tube is utilized, the long-term flexural modulus shall be the percentage of the short-term modulus as determined by the above referenced testing.

The layers of the finished CIPP shall be uniformly bonded. It shall not be possible to separate any two layers with a probe or point of a knife blade so that the layers separate cleanly or such that the knife blade moves freely between the layers. If separation of the layers occurs during testing of the field samples, new samples will be cut from the work. Any reoccurrence may be cause for rejection of the work.

The finished CIPP shall fit tightly to the host pipeline at all observable points and shall meet or exceed the minimum thickness established by the design process. The materials properties of the finished CIPP shall meet or exceed the following structural standards:

MINIMUM PHYSICAL PROPERTIES

Property	ASTM Test Method	Polyester System	Filled Polyester System	Vinyl Ester System
Flexural Strength	D790	4,500psi	4,500psi	5,000psi
Flexural Modulus (Initial)	D790	250,000psi	400,000psi	300,000psi
Flexural Modulus (50 Yr)	D790	125,000psi	200,000psi	150,000psi
Tensile Strength	D638	3,000psi	3,000psi	4,000psi

The required CIPP liner wall thickness shall be based, as a minimum, on the physical properties in Section 17.080 of this Specification, in accordance with the design equations in the Appendix of ASTM F1216, and the following design parameters:

Design Safety Factor	=	2
Retention Factor for Long-Term Flexural Modulus to be used in Design *(as determined by Long-Term tests described in Section 17.08B)*	=	1% - 50%

Ovality	=	5%
Groundwater Depth (above invert)	=	Assume at Existing Grade
Soil Depth (above crown)	=	Based on field measurements
Soil Modulus	=	700 psi
Soil Density	=	120 pcf
Live Load	=	AASHTO HS - 20
Design Condition	=	Fully Deteriorated
Enhancement Factor	=	7.0
Poisson's Ratio	=	0.3

The CIPP liner material shall conform to the minimum wall thicknesses, as listed below:

MINIMUM WALL THICKNESSES

CIPP	Thickness
4"-6"	3.0 mm
8"-12"	6.0 mm
15"	7.5 mm
18"-21"	9.0 mm
24"-27"	10.5 mm
30"-36"	12.0 mm
42"	13.5 mm
48"	15.0 mm

Any layers of the tube that are not saturated with resin prior to insertion into the host pipe shall not be included in the CIPP liner wall structural thickness computation.

21.07 INSTALLATION

The CIPP shall be installed in accordance with the practices given in ASTM F1216 (for direct inversion installations) or ASTM F1743 (for pulled-in-place installations). The quantity of resin used for the tube's impregnation shall be sufficient to fill the volume of air voids in the tube with additional allowances being made for polymerization shrinkage and the anticipated loss of any resin through cracks and irregularities in the original pipe wall. A vacuum impregnation process shall be used in conjunction with a roller system to achieve a uniform distribution of the resin throughout the tube. The impregnated liner tube shall be transported to and stored at the site in such a manner that it will not be damaged, exposed to direct sunlight, or result in any public safety hazard. The impregnated liner tube shall be kept cool during shipment and storage. All materials shall be subject to inspection and review prior to installation.

Contractor shall ensure that an Engineer approved procedure is followed for sealing the liner from all groundwater infiltration and migration at connections to and within all manholes. Hydrophilic sealing material shall be placed per the Manufacturer's recommended product guidelines and Contractor's/Manufacturer's approved procedures prior to liner installation. Temperature gauges shall be placed at the upstream and downstream ends of the reach being lined to monitor the pressurized fluid's (air or water) temperature. In addition to monitoring the temperature inside the tube, temperature gauges shall be placed between the host pipe and the liner at as many points as is practical to record the heating that takes place on the outside of the liner. The impregnated tube shall be inserted through an existing manhole or access structure by means of the manufacturer's recommended installation process in accordance with ASTM F1216. The application of hydrostatic head, compressed air, or other means shall fully extend the CIPP liner to the next designated manhole or termination point and inflate and firmly adhere the liner to the host pipe wall. The liner tube shall be installed at a rate less than 10 feet per minute at all times. If the CIPP liner installation fails, the Contractor shall be responsible for operating the bypass pumping equipment for the additional time required until the installation can be completed, at the Contractor's expense.

Curing of the resin system shall be as per the Manufacturer (Licensor) of the CIPP product. The temperatures achieved and the duration of holding the pressurized fluid at those temperatures shall be per the Manufacturer's (Licensor's) established procedures. If a heat source is required after placement is completed, suitable heat source and distribution equipment shall be provided. The equipment shall be capable of circulating hot water, air, and/or steam throughout the section by means of a pre-strung hose which has been perforated in accordance with the manufacturer's recommendations or other methods acceptable by the Engineer to raise the temperature uniformly above the temperature required to affect a resin cure. This temperature shall be determined by the manufacturer based on the resin/catalyst system employed. The heat source piping shall be fitted with continuous monitoring thermocouples to gauge the temperature of the incoming and outgoing water, steam, and/or air supply. Water, steam, or air temperature during the cure period shall meet the requirements of the resin manufacturer as measured at the heat source inflow and outflow return lines. The Contractor shall provide standby equipment to maintain the heat source supply. An additional continuous monitoring thermocouple shall be placed between the impregnated felt tube and the pipe invert at the remote manhole and at a point midway between the upstream and downstream manholes to determine the temperature during the cure. The temperature during the cure shall not be less than 130 degrees F at the boundary between the pipe wall and the liner unless otherwise required because of the resin system used. The initial cure shall be deemed to be completed when inspection of the exposed portions of the liner appears hard and sound and the remote temperature sensors indicate that an exotherm has occurred. The cure period shall be of duration and temperature recommended by the resin manufacturer during which time the recirculation of the water, steam, and/or air and cycling of the heat exchanger continuously maintain the required temperature. A data logger shall be used for Main Liners to continuously record temperature, pressure and time during heating, cure and cool down of the liner at the insertion, intermediate and termination manholes. Where requested, this data shall be provided to the Engineer for each pipe segment.

The cured liner shall be cooled to a temperature below 100 degrees F before relieving the static head or pressure in the lined pipe and returning normal flow back into the system. The cool down may be accomplished by introducing cool water or air into the lined pipe. Care shall be taken in the release of the static head or pressure so that a vacuum will not develop which could damage the newly installed liner. Water for cooling shall be supplied by the Contractor. The finished liner shall be continuous over the

length of the host pipe and be free from defects such as dry spots, delamination and lifts. All materials other than the cured liner should be removed from the pipe by the Contractor.

21.08 CIPP MAIN LINER TERMINATION AND CONNECTION IN MANHOLES

A. The liner shall achieve a watertight seal through the manhole channel/invert and at the host pipe(s) where it enters/exits any manhole. The use of fiber felt and a suitable resin system, hydrophilic rubber waterstops, injection grouting, or other Engineer approved methods compatible with the liner shall be used to ensure a watertight CIPP liner system. CIPP liner entries at manholes shall be smooth and free of irregularities. The top half of the CIPP liner shall be neatly cut at least 4-inches away from the wall.

B. The channel in the manhole shall be a smooth continuation of the pipe(s) and shall be merged with other pipes or channels. All manholes shall be individually inspected for liner cut off, benches and sealing Work. Any visible leaks through or around the CIPP liner shall be corrected by an approved method at the Contractor's expense. It is anticipated that some pipe to manhole connections will require supplementary efforts to affect an acceptable watertight seal.

C. The channel in the manhole shall be a smooth continuation of the liner and pipe(s) and shall be merged with other channels. Inverts and/or benches shall be resurfaced/repaired (or constructed where necessary as directed by the Engineer) to provide a smooth flow channel. The Engineer may also require that the manhole floor and base section receive an approved monolithic coating which is chemically compatible with the CIPP liner, and any chemical/cementitious grout or repair material used in the manhole.

21.09 SERVICE RECONNECTION

A. The Contractor shall be responsible for internally reopening the service connections to the lined pipe using a pivot-head CCTV inspection camera and a remote cutting tool. The Contractor shall locate the service connections from inside the lined pipe, cut a hole matching the connection diameter, and grout the area where the service connection enters the lined pipe to produce a watertight seal approved by the Engineer. Grouting of service connections shall be accomplished using a "Logiball" type lateral packer to seal the first 18 inches of the service connection in accordance with the manufacturer's instructions and the Technical Specifications. The Contractor shall provide a nearly full-diameter hole, free from burrs, loose or abraded material, hanging fibers or projections, and with a neat, smooth and crack-free edge. The hole shall be 95 percent minimum and 100 percent maximum of the original service connection diameter. The invert of the service connection shall match the bottom of the reinstated service opening. The Contractor shall certify he has a minimum of 2 complete working cutters plus spare key components on the site before each installation. All cuttings shall be collected and disposed of properly.

B. All service connections shall be reopened including those that go to unoccupied or abandoned buildings or vacant lots, unless directed otherwise by the Engineer. Begin reconnection of services within four hours after liner insertion. The Contractor shall initially reopen each connection in an expeditious manner with a less than a full size opening to release wastewater temporarily stored in the service lateral. The Contractor shall then complete reconnection of all services within 24 hours. The Contractor shall immediately reopen any missed connections and repair any holes drilled in

error. Faulty cuts shall be repaired by methods approved by the Engineer at no additional cost to the City.

C. It is the intent of these Specifications that service connections be reopened without excavation. No additional payment will be made for excavations for the purpose of reopening connections and the Contractor will be responsible for all costs and liability associated with such excavation and restoration work.

21.10 INSTALLATION RESPONSIBILITIES FOR INCIDENTAL ITEMS

It shall be the responsibility of the Owner to locate and designate all manhole access points open and accessible for the work, and to provide rights of access to these points. If a street must be closed to traffic because of the orientation of the pipeline, the Owner shall institute the actions necessary to do this for the mutually agreed time period. The Owner shall also provide free access to water hydrants for cleaning, installation of the tube, and other work items requiring water.

The Contractor, when required, shall remove all internal debris out of the pipeline that will interfere with the installation of the CIPP. The Owner shall provide a dumpsite for all debris removed during the cleaning operations. Unless stated otherwise, it is assumed that this site will be at or near the sewage treatment facility to which the debris would have arrived in absence of the cleaning operation. Any hazardous waste encountered during this project will be considered as a changed condition.

The Contractor, when required, shall provide for the flow of sewage around the section, or sections, of pipe designated for rehabilitation. The bypass shall be made by plugging the line at the existing upstream manhole and pumping the flow into a downstream man- hole or adjacent system. The pump and bypass lines shall be of adequate capacity and size to handle the anticipated flow. The City may require a detail of the bypass plan to be submitted.

Experienced personnel trained in locating breaks, obstacles, and service connections by close circuit television shall perform inspection of the pipelines. The interior of the pipe- line shall be carefully inspected to determine the location of any conditions that may pre- vent proper installation of the CIPP into the pipelines, and it shall be noted so that these conditions may be corrected. A videotape and suitable log shall be kept for later reference by the City.

It shall be the responsibility of the Contractor to clear the line of obstructions such as solids and roots that will prevent the insertion of CIPP. If pre-installation inspection reveals an obstruction such as a protruding service connection, dropped joint, or a collapse that will prevent the installation process, and it cannot be removed by conventional sewer cleaning equipment, then the Contractor shall make a point repair excavation to uncover and remove or repair the obstruction. Such excavation shall be approved in writing by the City's representative prior to the commencement of the work and shall be considered as a separate pay item.

The Contractor shall make every effort to maintain service usage throughout the duration of the project. In the event that a service will be temporarily out of service, the maximum amount of time of no service shall be 16 hours for any property served by the sewer. The Contractor shall be required to notify the City and all affected properties whose service laterals will be out of commission and to advise against water usage until the sewer main is back in service. Such notification shall be provided to the Utility Department at least one week prior to service disconnecting.

A public notification program shall be implemented, and shall as a minimum, require the Contractor to be responsible for contacting each home or business connected to the sanitary sewer and informing them of the work to be conducted, and when the sewer will be off-line. The Contractor shall also provide the following:

A. Written notice to be delivered to each home or business describing the work, schedule, how it affects them, and a local telephone number of the Contractor they can call to discuss the project or any problems that could arise.

B. Personal contact and attempted written notice the day prior to the beginning of work being conducted on the section relative to the residents affected.

C. Personal contact with any home or business that cannot be reconnected within the time stated in the written notice.

21.11 QUALITY ASSURANCE PROCEDURES

21.11.01 Material

A. All material testing shall be performed and certified by a registered independent, third-party laboratory.

B. Wall thickness of samples shall be determined as described in ASTM F1216, Section 8 or ASTM F1743, Section 8. The minimum wall thickness at any point shall not be less than 87.5% of the design thickness as calculated in Section 17.08 of this Specification.

C. The Contractor shall obtain, prepare and store appropriate samples for all liners installed under this Contract. The Contractor shall provide samples of the cured lining material from the actual installed liner at a minimum of one set per each liner insertion setup. The preparation and testing of these samples shall be in accordance ASTM F1216, Section 8. The Contractor shall coordinate the required testing of the samples with the laboratory, and the City will pay for the initial testing of these samples in accordance with the pay item. The Contractor shall pay for the cost of retests made necessary by the failure of the samples to meet the specified requirements.

D. The cured liner shall be sampled and tested for flexural strength and flexural modulus (short term). Flexural strength and modulus shall be tested in accordance with the requirements of ASTM 0790. The liner shall be in compliance with the physical properties stated in this Specification.

E. Corrosion resistance requirements shall be as stated in ASTM F1216, Section X2, Chemical Resistance Tests.

21.11.02 Field

A. Up to 10 percent of the installed CIPP Main Liners may be tested for exfiltration in accordance with ASTM F1216, Section 8.2 prior to service lateral reconnections. Testing shall exclude maximum pressure limitation (4.3 psi) at lowest end. Leakage testing shall be performed after

all dry and non-bondable hoses and tubes are completely removed from the liner. If the liner fails the test, Contractor shall repair or replace liner as required until the tested segment passes.

B. After completion of the installation of Main Liners, service reconnections, and finish work at the manholes, the lined pipe and adjacent manholes shall be televised by the Contractor at his expense, with a color CCTV inspection tilt-head camera recorded in digital format, as required by these Specifications. Pre-installation and post-rehabilitation inspections shall either be recorded on the same media or shall be referenced, if recorded on separate media. Acceptance of the Work shall be based on Engineer's review of the CCTV inspection. Post-rehabilitation CCTV inspection shall not be performed in conjunction with cleaning operations and the liner wall shall be as dry as practical during this inspection (no dripping or splashing). All CCTV inspections delivered to the City shall be in accordance with the Technical Specifications.

END OF SECTION

SECTION 23 – FIBERGLASS WET WELL OR MANHOLE LINER

23.01 GENERAL

Fiberglass reinforced polyester wet wells shall be manufactured from commercial grade polyester resin or vinyl ester resin, with fiberglass reinforcements. The resin system shall be suitable for atmospheres containing hydrogen sulfide and dilute sulfuric acid as well as other gases associated with the wastewater collection systems. The manhole liner or fiberglass wet well shall be a one-piece unit manufactured to meet or exceed all specifications of A.S.T.M. D-3753 latest edition as manufactured by L.F. Manufacturing, Inc., Giddings, Texas, or an approved equal. Section 37 "Wastewater Structure Rehabilitation" contains additional information about fiberglass liners and will govern over this section in the event of a conflict.

23.02 MATERIALS

A. RESIN:
The resins used shall be a commercial grade unsaturated polyester resin.

B. REINFORCING MATERIALS:
The reinforcing materials shall be commercial Grade "E" type glass in the form of mat, continuous roving, chopped roving, roving fabric, or a combination of the above, having a coupling agent that will provide a suitable bond between the glass reinforcement and the resin.

20.02.01 FIBERGLASS WET WELL MATERIALS

A. SURFACING MATERIALS
If reinforcing materials is used on the surface exposed to the contained substance, it shall be a commercial grade chemical-resistant glass that will provide a suitable bond with the resin and leave a resin rich surface.

B. FILLERS AND ADDITIVES
Fillers, when used, shall be inert to the environment and wet well construction. Additives, such as thixotropic agents, catalysts, promoters, etc., may be added as required by the specific manufacturing process to be used. The resulting reinforced plastic material must meet the requirement of this specification.

20.02.02 FRP MANHOLE LINER MATERIALS

A. INTERIOR SURFACING MATERIAL
The inner surface exposed to the chemical environment shall be a resin-rich layer of 0.010 to 0.020 inch thick. The inner surface layer exposed to the corrosive environment shall be followed with a minimum of two passes of chopped roving of minimum length 0.5 inch (13 mm) to maximum length of 2.0 inch (50.8 mm) and shall be applied uniformly to an equivalent weight of 3 oz/ft. Each pass of chopped roving shall be well rolled prior to the application of additional reinforcement. The combined thickness of the inner surface and interior layer shall not be less than 0.10 inch (2.5 mm).

B. WALL CONSTRUCTION PROCEDURE:
After inner layer has been applied the manhole liner wall shall be constructed with chop and continuous strand filament wound manufacturing process which insures continuous reinforcement and uniform strength and composition. The cone section, if produced separately, shall be affixed to the barrel section at the factory with resin-glass reinforced joint resulting in a one piece unit. Seams shall be fiberglassed on the inside and the outside using the same glass-resin jointing procedure. Field joints shall not be acceptable by anyone except the manufacturer.

C. EXTERIOR SURFACE:
For a UV inhibitor the resin on the exterior surface of the manhole liner shall have gray pigment added for a minimum thickness .125 inches

D. FILLERS AND ADDITIVES:
Fillers, when used, shall be inert to the environment and manhole construction. Sand shall not be accepted as an approved filler. Additives, such as thixotropic agents, catalysts, promoters, etc., may be added as required by the specific manufacturing process to be used to meet the requirements of this standard. The resulting reinforced-plastic material must meet the requirements of this specification.

23.03 WET WELL FABRICATION

A. EXTERIOR SURFACE:
The exterior surface shall be relatively smooth with no sharp projections. Handwork finish is acceptable if enough resin is present to eliminate fiber show. The exterior surface shall be free of blisters larger than ½ inch in diameter, delamination and fiber show.

B. INTERIOR SURFACE:

The interior surface shall be resin rich with no exposed fibers. The surface shall be free of grazing, delamination, blisters larger than ½ inch in diameter, and wrinkles of 1/8 inch or greater in depth. Surface pits shall be permitted up to 6 square feet if they are less than ¾ inch in diameter and less than 1/16 inch deep.

C. FIBERGLASS REINFORCED BOTTOM:

The bottom to be fabricated using fiberglass material as stated in Section 20.02. Material and installation to meet all physical requirements as per Section 20.05. Bottom to be attached to wet well pipe with fiberglass layup to comply with A.S.T.M.-D3299 specifications. When reinforcement is necessary for strength, the reinforcement shall be completely enclosed with a fiberglass layup per A.S.T.M.-D3299.

D. FIBERGLASS REINFORCED TOP:

The fiberglass wet well top shall be fabricated using fiberglass material as stated in Section 20.02. Material and installation to meet all physical requirements as per Section 20.05. Top to be attached to wet well pipe with fiberglass layup to comply with A.S.T.M.-D3299 specifications.

When reinforcement is necessary for strength, the reinforcement shall be completely enclosed with a fiberglass layup per A.S.T.M.-D3299.

E. INSTALLATION OF STUBOUTS:

Effluent, service, or discharge lines made be factory installed. Approved methods are PVC sewer pipe, Inserta-Tee fittings, or Kor-N-Seal boots. Installation of stubouts to be fiberglass layup to comply with A.S.T.M.-D3299 specifications.

F. DEFECTS NOT PERMITTED:

A. Exposed fibers: glass fibers not wet out with resin
B. Resin runs: runs of resin and sand on the surface.
C. Dry areas: areas with glass not wet out with resin.
D. Delamination: separation in the laminate.
E. Blisters: light colored areas larger than ½ inch in diameter.
F. Crazing: cracks caused by sharp objects.
G. Pits of Voids: air pockets.
H. Wrinkles: smooth irregularities in the surface
I. Sharp projection: fiber or resin projections necessitating gloves for handling.

23.04 FRP MANHOLE LINER DESIGN

A. INTERIOR ACCESS:

All manhole liners shall be designed so that a ladder or step system can be supported by the installed manhole liner.

B. MANWAY REDUCER:

Manway reducers will be concentric with respect to the larger portion of the manhole liner diameters through 60 inches. Larger manhole liners may have concentric or eccentric manway reducer openings.

C. COVER AND RING SUPPORT:

The manhole liner shall provide an area for which grade rings or brick can be installed to accept a typical metal ring and cover and have the strength to support a traffic load without damage to the manhole liner.

D. EXTERIOR SURFACE:

The exterior surface shall be relatively smooth with no sharp projections. Hand-work finish is acceptable if enough resin is present to eliminate fiber show. The exterior surface shall be free of blisters larger than 0.5 inch in diameter, delamination or fiber show.

E. INTERIOR SURFACE:

The interior surface shall be resin rich with no exposed fibers. The surface shall be free of crazing, delamination, blisters larger than 0.5 inch in diameter and wrinkles of 0.125 inch or greater in depth. Surface pits shall be permitted if they are less than 0.75 inch in diameter and less than 0.0625 inch deep. Voids that cannot be broken with finger pressure and that are entirely below the resin surface shall be permitted if they are less than 0.5 inch in diameter and less than 0.0625 inch thick.

F. REPAIRS:

Any manhole repair is subject to meet all requirements of this specification.

G. MANHOLE LENGTH:

Manhole lengths shall be in 6-inch increments +/- 2 inches.

H. DIAMETER TOLERANCE:

Tolerance of inside diameter shall be +/- 1% of required manhole diameter.

23.05 PHYSICAL REQUIREMENTS

20.05.01 LOAD RATING

The complete wet well or manhole liner shall have a minimum dynamic-load rating of 16,000 ft-lbs when tested in accordance with A.S.T.M. 3753 Section 8. To establish this rating, the complete wet well or liner shall not leak, crack, or suffer other damage when load tested to 40,000 lbs and shall not deflect vertically downward more than ¼ inch at the point of load application when loaded to 24,000 lbs.

20.05.02 STIFFNESS

The wet well or manhole liner cylinder shall have a minimum pipe-stiffness values shown in the table below when tested in accordance with A.S.T.M. 3753 Section 8.

STIFFNESS REQUIREMENTS

FIBERGLASS WET WELL		MANHOLE LINER	
LENGTH-FT	**F/AY – PSI**	**LENGTH-FT**	**F/AY – PSI**
10 - 20	2.01	3 – 6.5	0.75
21 - 30	3.02	7 – 12.5	1.26
31 - 40	5.20	13 - 20.5	2.01

PHYSICAL PROPERTIES:	FIBERGLASS WET WELL		MANHOLE LINER	
	HOOP DIRECTION	AXIAL DIRECTION	HOOP DIRECTION	AXIAL DIRECTION
a. Tensile Strength (psi)	18,000	5,000	18,000	5,000
b. Tensile Modules (psi)	0.8 x 10^6	0.7 x 10^6	0.6 x 10^6	0.7 x 10^6
c. Flexural Strength (psi)	26,000	4,500	26,000	4,500
d. Flexural Modules (psi)	-	-	1.4 x 10^6	0.7 x 10^6
(no ribs – 48”, 60”, 72”)	1.4 x 10^6	0.7 x 10^6	-	-

(with ribs – 96", 144")	0.7 x 10^6	0.7 x 10^6	-	-
e. Compressive (psi)	-	-	18,000	5,000

23.06 TEST METHODS

Tests shall be performed as specified in A.S.T.M. 3753 latest edition, Section 8.

23.07 INSTALLATION

23.07.01 FIBERGLASS WET WELL INSTALLATION

A. EXCAVATION:

A. General:

The limit of excavation shall be such to allow for placing and removing forms, installing sheeting, shoring, bracing, etc. The Contractor shall pile excavated material in a manner that will not endanger the work and will avoid obstructing sidewalks, driveways, power poles, etc. Drainage shall be kept clear.

B. Vertical Sides:

When necessary to protect existing or proposed structures or other improvements, the Contractor shall maintain vertical sides of the excavation. The limit shall not exceed three feet outside the footing on a vertical plane parallel to the footing except where specifically approved otherwise by the Engineer. The Contractor shall provide and install any sheeting, shoring, and bracing as necessary to provide a safe work area as required to protect workmen, structures, equipment, power poles, etc. The Contractor shall be responsible for the design and adequacy of all sheeting, shoring, and bracing. The sheeting, shoring, and bracing shall be removed as the excavation is backfilled in such a manner as to prevent injurious caving.

C. Sloping sides:

Where sufficient space is available, the Contractor shall be allowed to back slope the sides of the excavation. The back slope shall be such that the excavation shall be safe from caving. The type of material being excavated shall govern the back slope used, but in any case, the back slope shall be no steeper than 1 foot horizontal to 1 foot vertical.

D. Dewatering:

The Contractor shall keep the excavation free from water by use of cofferdams, bailing, pumping, well pointing, or any combination as the particular situation may warrant. All dewatering devices shall be installed in such a manner as to provide clearance for construction, removal of forms, and inspection of exterior of form work. It is the intent of these specifications that the foundation be placed on a firm dry bed. The foundation bed shall be kept in a dewatered condition a sufficient period of time to insure the safety of the structure. All dewatering methods and procedures are subject to the review and

acceptance of the Engineer. The excavation shall be protected from excessive rainfall, drainage and drying. It is the intent of these specifications that the Contractor provide a relatively smooth, firm foundation bed for footings and slabs that bear directly on the undisturbed earth without additional cost to the Owner, regardless of the soil conditions encountered. The contractor shall pile excavated material in a manner that will not endanger the work.

E. Unauthorized Over Excavation:

Excavation for slabs, footings, etc., that bear on earth shall not be carried below the elevation shown on the drawings. In the event the excavation is carried on below the indicated elevation, the Contractor shall bring the slab, footing, etc., to the required grade by filling with concrete having a minimum compressive strength of at least 3,000 psi at 28 days.

B. OPEN BOTTOM WETWELL INSTALLATION:

Bottom of excavation should be compacted to 95% Standard Proctor Density. Pour reinforced concrete base one foot deep and at least two feet larger than the fiberglass wet well outside diameter. As soon as the concrete has set-up enough to support the fiberglass wet well, lower the wet well into place. Pour a minimum of one foot of reinforced concrete on the inside, also a minimum of one foot deep and two feet from the fiberglass wet well wall on the outside of the wet well. Insert ram neck type sealant on the outside of fiberglass wet well around the bottom where the fiberglass and concrete come together.

C. CUTOUTS:

Cutouts in wet well wall should be made with proper cutting tools, such as jig saw or hole saw. Do not use axe or other impact-type tools.

D. INSTALLATION OF SEWER PIPE:

A. Type1: Make the cutout in the wet well wall, the outside diameter of pipe, plus 1/2 inch maximum. Slip pipe into position. Apply industrial grade silicone around the pipe next to the wet well wall cutout on the inside and on the outside. Cover the outside siliconed area with epoxy grout and backfill.

B. Type 2: Make the cutout in the wet well wall, the outside diameter of pipe, plus 1/2 inch maximum. Grind the outside surface of the pipe and both the inside and the outside surfaces of the cutout in the wet well wall. (Apply a priming agent to any PVC pipe that might be used before fiberglass lay-up.) Insert the pipe through the cutout in the wall of the wet well. Apply fiberglass putty to the inside and the outside of the wet well wall cutout, filling openings between pipe and cutout. Make a good radius for the fiberglass lay-up. After putty has set-up, fiberglass the pipe into place. Use one layer of woven roving sandwiched between two layers of fiberglass mat. Allow fiberglass to completely set-up before backfilling. Fiberglass layup method to comply with A.S.T.M.-D3299 specifications.

C. Type 3: Install Insert-A-Tee type fitting per manufacturers instruction. (Fowler Mfg. Co., P.O. Box 767, Hillsboro, Or. 97123. PH. 503-359-5417) or approved equal.

E. CLOSED BOTTOM WET WELL INSTALLATION:

Bottom of excavation should be compacted to 95% Standard Proctor Density. Wet wells with diameters up to 54 inches and depths no greater than 12 feet, may be placed on a base of 6 inches of crushed stone. Wet wells with depths greater than 12' feet, should have a poured reinforced concrete base at least one foot deep and at least two feet larger than fiberglass wet well outside diameter. The fiberglass wet well shall be lowered into the wet concrete and brought to plumb. Pour reinforced concrete over the anti-flotation flange. The concrete shall be a minimum of one foot deep and two feet from outside wall of the wet well. More concrete may be required in high water table areas.

F. INTERNAL BOTTOM RIBS:

Wet wells with internal bottom stiffening ribs will require that concrete be poured on the inside of the wet well to a depth equal to that of the stiffening ribs. This is typically 4 – 6 inches.

G. FIBERGLASS WET WELL TOP:

The fiberglass top may have stubouts installed or may have a raised fiberglass collar around the hatch opening. The fiberglass top has been designed to withstand the weight of a concrete reinforced slab to be installed over it.

H. BACKFILL:

A. Backfill Material: Unless shown otherwise on the drawings, sand or crushed stone shall be used for backfill around the wet well for a distance of two feet from the outside surface and extending from the bottom of the excavation to the bottom of the top slab. Suitable material chosen from the excavation may be used for the remainder of the backfill. The material chosen shall be free of large lumps or clods, which will not readily break down under compaction. This material will be subject to review and acceptance of the Engineer. Backfill material shall be free of vegetation or other extraneous material. Excavated materials which are to be used for fill or backfill may be stockpiled on the site. Location of stockpiles shall be approved by the City. Top soil should be stockpiled separately and used for finish grading around the structure.

B. Schedule of Backfilling: The Contractor may begin backfilling of wet well as soon as the concrete has been allowed to cure and the forms removed.

C. Backfill Lifts: Backfill shall be placed in layers of not more than 12 loose measure inches and mechanically tamped to at least 95% Standard Proctor Density. Flooding will not be permitted. Backfill shall be placed in such a manner as to prevent any wedging action against the structure.

I. TOP SLAB SUPPORT:

When installing a fiberglass wet well without a fiberglass top you should pour a reinforced concrete slab support a minimum of two feet outside of fiberglass wet well wall and a minimum of six inches thick. The slab shall be specified and designed by engineer or precast manufacturer engaged by contractor per Contract Documents.

23.07.02 FRP MANHOLE LINER INSTALLATION

Unless shown otherwise on drawings and approved by the engineer, concrete grout shall be used for backfill between the old manhole and the new fiberglass manhole liner. The backfill around the excavated reducer section shall be stabilized sand or crushed stone. The material chosen shall be free of large lumps or clods which will not readily break down under compaction. This material will be subject to approval by the engineer.

The concrete grout backfill shall be poured in layers of not more than 12 inches in even lifts. The reducer section to be backfilled in 12-inch lifts evenly and compacted to 95% Standard Proctor Density.

23.08 SHIPPING AND HANDLING

23.08.01 FIBERGLASS WET WELL SHIPPING AND HANDLING

Do not drop or impact the wet well. Wet wells shall be chocked if stored horizontally. If wet wells must be moved by rolling, the ground transversed shall be smooth and free of rocks, debris, etc. FRP wet wells may be lifted by the installation of two lifting lugs as specified by the manufacturer on the outside surface near the top or by a sling or “choker” connection around the center. Use of chains or cables in contact with the wet well surface is prohibited. Wet wells may be lifted horizontally using one support point.

23.08.02 FRP MANHOLE LINER SHIPPING AND HANDLING

Do not drop or impact the fiberglass manhole liner. Fiberglass manhole liner may be lifted by inserting a 4″x 4″x 30″ timber into the top of manhole with cable attached or by a sling or “choker” connection around center of manhole, lift as required. Use of chains or cables in contact with the manhole surface is prohibited.

END OF SECTION

SECTION 33 – FRAC-OUT PLAN FOR SUBAQUEOUS CROSSINGS

33.01 GENERAL

A. The Contractor must implement and adhere to the Best Management Practices (BMPs) and Frac-Out Plan as outlined in this Specification Section for projects including subaqueous transmission lines installed, repaired, or replaced using horizontal directional drilling and permitted through the US Army Corps of Engineers (USACE).

B. The Contractor shall furnish all necessary equipment and provide the necessary labor to adhere to the BMPs and Frac-Out Plan procedures.

33.02 BEST MANAGEMENT PRACTICES (BMPs)

The Contractor will implement the following Best Management Practices (BMPs) to minimize the potential for adverse environmental impacts during horizontal directional drilling activities:

A. BMPs for erosion control within the staging area shall be implemented and maintained at all times during the drilling and back-reaming operations to prevent siltation and turbid discharges in excess of State Water Quality Standards pursuant to Rule 62-302, F.A.C. Methods shall include, but are not limited to the immediate placement of turbidity containment devices such as turbidity screen, silt containment fence, hay bales, and earthen berms, etc. to contain the drilling mud. Earthen berms shall not be utilized as to impact wetlands or other surface waters.

33.03 FRAC-OUT PLAN

A. Measures used to prevent frac-out during the HDD operation shall include maintaining the proper boring depth for the soil conditions along the drilling route as well as proper management of drilling fluids circulation pressure. The minimum distance between the top of the over-ream hole and surface shall be maintained according to the Contract Documents. This distance should be sufficient to prevent frac-out when drilling with controlled and monitored drill fluid pressure.

B. Non-toxic fluorescent dyes will be added to the drilling lubricant as a method for monitoring bentonite releases in the underwater portions of this drilling. Details of the fluorometry monitoring method shall be submitted to the USACE prior to the pre-construction meeting

C. Drilling fluid returns (flow of drilling fluids to the HDD entry/exit pit location) will be continuously monitored visually during the installation.

D. The volume and circulation pressure of drilling fluid in the HDD bore and over-ream shall be monitored at all times during the HDD operation. The HDD drill rig operator will monitor the downhole annular pressure at all times. Should a drop in volume occur, immediately conduct a visual inspection of both terrestrial and pavement portions of the HDD corridor. A visual inspection of all project area and adjacent waterbodies, and storm and sanitary sewer systems shall also be conducted.

E. Should the detection of dye or a drop in volume of bentonite occur, the Contractor will follow the Release Procedures outlined below.

F. All drilling fluids associated with the HDD operation shall be contained onsite. The volume of the drilling fluids recirculation/solids settlement pit and onsite storage/frac tanks and watertight roll-off containers shall be submitted for review by the Engineer. As required during the HDD process, screened solids and surplus drilling fluid will be removed and disposed of off the project site at a location of the HDD Contractor's choice in accordance with applicable regulations. At the conclusion of all drilling operations, drilling fluid remaining in the pit will be settled, removed completely from the pit, and hauled to a disposal site of the HDD Contractor's choice in accordance with applicable regulations within 48 hours of the pipe pull-in. After back-reaming, drilling materials will be removed from the inside of the pipeline by pigging it from the exit point towards the rig area. The paved and/or vegetated surface of the disturbed pit area shall be restored according the Contract Documents.

G. At all times, adequate protection will be taken to avoid impacts to pavement, structures, and Aquatic Preserve/Outstanding Florida Waters and contiguous wetlands. This shall include, but is not limited to halting of construction/drilling and/or placement of turbidity containment devices in accordance with the applicable regulations.

H. A pump tanker or vactor truck shall be onsite and available at all times. The Contractor shall demonstrate the contracted availability of additional pump tankers and/or vactor trucks if needed for surplus or frac-out drilling fluids.

I. A spill kit (i.e., absorbent pads/brooms, shovels, goggles, gloves) shall be onsite and available at all times.

33.04 RELEASE PROCEDURE

A. If a frac-out is confirmed, all construction activity contributing to the frac-out shall cease immediately.

B. If the return drilling fluid is less than the projected amount to be recovered, divers shall begin a search for the missing material within 1 hour of potential release if the drilling takes place under a body of water. Once the drilling fluid and frac-out is located, then the drilling mud containment plan shall be immediately implemented.

C. The Contractor shall notify the City upon confirmation of the occurrence. The notification shall include the time of the frac-out, location and impact on pavement and improvements, and the environmental conditions of the impacted area.

D. If a frac-out has occurred during construction activities, the Contractor shall coordinate with the City in order to notify the USACE of Engineers, within 24 hours of the occurrence. The notification shall include the time of the frac-out, the response time of the underwater diver, and the environmental conditions of the affected area.

F. If the loss of drilling fluid or excess fluid pumping/recirculation pressure results in the heaving and/or settlement of pavement, curb, sidewalk and/or other infrastructure, the HDD Contractor shall immediately mobilize all equipment, manpower and devices to recover the drilling fluid, relieve the fluid pressure, stop any heaving or settlement of infrastructure and protect the public. The HDD Contractor shall prepare a remediation plan to repair, replace, or restore the affected infrastructure in accordance with the governing jurisdiction's standards, reviewed for approval prior to implementation.

G. Before continuing with the HDD operation, the HDD Contractor shall prepare and submit for approval a revised plan for successful completion of the required project. The plan shall identify the manpower, equipment, drilling fluid, additives, pump pressures, original bore hole sealing, and bore path modifications that may be required.

33.05 DRILLING MUD CONTAINMENT PLAN

A. Should the release of drilling materials occur on land, a sediment fence shall be constructed around the site and the material shall be removed by vacuum truck.

B. Should the release of drilling materials occur in-water, clean-up with a vacuum system shall commence within 24 hours.

C. The scientist/biologist underwater divers will guide the suction hose of the pump to minimize both the removal of natural bottom material and the disturbance of any existing vegetation.

D. Any escaped drilling lubricant must be pumped into filter bags or directly into a vactor truck.

E. A barge company will be contacted to transport a vactor truck should it be needed to respond "in-water."

F. Once the spill is contained, the escaped drilling lubricant shall be properly disposed of in an approved upland disposal site.

G. Clean-up with a vacuum system shall commence within 24 hours.

H. After containment/recovery of the drilling material/resources, the HDD Contractor shall prepare a detailed written report to be submitted to the City and USACE, within 10 business days, that summarizes the incident, including the following:

1. Details on the release event, including an estimate of the bentonite released;
2. The location and time of release;
3. The size of the area impacted, and the success of the clean-up action;
4. Name, firm, address and telephone number of HDD Contractor reporting;
5. Photos and/or digital recording of frac-out area and impacts;
6. Date and Time;
7. How the release occurred;
8. The type of activity that was occurring around the area of the inadvertent return;

9. Description of any sensitive areas and their location in relation to the inadvertent return;
10. Description of the methods used to clean up or secure the site;
11. Changes to the drilling fluid properties or drilling process (if any); and
12. Mitigation of any impacted public utility infrastructure and water bodies from the frac-out

END OF SECTION

SECTION 34 –MANHOLE INSPECTION

34.01 SCOPE OF SERVICES

A. The Contractor shall perform visual inspections of the existing manholes and record any defect discovered. The visual inspection shall include surface photo, manhole cover and frame, chimney, walls, invert, and all appurtenances.

B. The nature of the inspections shall be to verify the physical condition of the manhole and to provide a permanent record of the existing condition as it relates to dimensions, materials, obstructions, breakage, connections, and deterioration. Inspections may be performed by personnel entry or from the surface utilizing pole mounted camera equipment to visually inspect the chimney, cone, wall, bench, pipe seals and invert conditions, and conditions of connecting pipes.

C. All City assets will be identified using the established facility identification code (FID) for all inspection reports, geographical exhibits, data sets and asset management tasks. Assets may include, but not be limited to, manholes, clean outs, gravity mains, force mains, air release valves, and conflict structures. Asset FIDs will be provided to the Contractor prior to the start of inspection. Failure to utilize the FID could result in additional inspection at the Contractors expense.

34.02 REQUIREMENTS

A. The Contractor shall inspect the manhole surroundings and the manhole interior using visual means and a digital camera for documentation.

B. All inspections shall be recorded.

C. All inspection forms shall be scanned and submitted as .PDF files.

D. All inspection data shall be entered into a NASSCO Manhole Assessment Certification Program (MACP) compliant database per Specification Section 20 “CCTV Inspection and Pipe Cleaning”.

E. The inspection photographs, report documents, and inspection database shall be in accordance with the specifications and NASSCO MACP.

F. Contractor shall maintain a copy of all report materials. The Contractor shall provide comments as necessary to fully describe the existing condition of the manhole on the inspection forms.

G. Contractor shall be responsible for modifications to equipment and/or inspection procedures to achieve City report requirements.

H. No Work shall commence prior to approval of the submitted materials by the City. Once accepted, the report materials shall serve as a standard for the remaining work.

34.03 QUALITY ASSURANCE

A. Use of PACP/MACP certified technicians to review/document defects in the office (post process) is acceptable.

B. The CCTV Contractor must have an internal quality assurance/quality control (QA/QC) program in place and all inspection data shall be subjected to the procedures prior to submittal to the City. The City will perform QA/QC audits on submitted data.

A QA/QC shall be performed by NASSCO MACP and PACP certified personnel.

34.04 SHOP DRAWINGS AND SUBMITTALS

A. Submittals shall be submitted to the City for review and acceptance prior to construction in accordance with Specification Section 03 -Submittals.

B. The above deliverables shall be submitted to the City for approval.

C. The manhole inspection reports and database shall be in accordance with the specifications and NASSCO MACP.

34.05 NOTIFICATION

The Contractor shall notify the City a minimum of 48-hours prior to performing any inspection work. The City may be present during part or all of the inspections. No payment will be made for inspections performed without proper schedule notification

34.06 EXECUTION

A. The inspection crew shall mobilize to the site of the manhole inspection and immediately establish traffic control measures per City of St. Pete Beach and Florida Department of Transportation (FDOT) requirements as well as any measures required to protect pedestrians. The crew shall inspect each manhole and record required information.

B. All manhole structures shall be located. Metal detectors shall be used to locate buried manholes. Once a buried manhole has been located, it shall be marked with paint and/or flagging, if necessary. All pertinent information available shall be recorded including area photo, address, etc. Contractor shall notify the City weekly with a list of those manholes that could not be fully inspected due to access issues. The City may arrange to have some or all these manholes exposed, or otherwise

made accessible for full inspection. The City will notify Contractor of the status and may authorize re-inspection.

34.07 MANDATORY INSPECTION HEADER INFORMATION

Once the manhole is located, the following mandatory information shall be recorded on the inspection form. Note that the mandatory fields noted below are more inclusive than the MACP requirements. All available information shall be collected and recorded for those manholes that are buried, could not open, surcharged, etc.

1. Manhole Number (City of St. Pete Beach Asset Number)
2. Sheet number
3. Date
4. Time
5. Surveyor's Name
6. Certifications Number
7. Drainage area (tributary Pump Station Number)
8. Location (street number and name)
9. Downstream pipe length (feet)
10. Rim to grade (nearest 0.1 foot)
11. Pre-cleaning method (using approved MACP codes)
12. Location code (using approved MACP codes)
13. Manhole surface type (using approved MACP codes)
14. Potential for runoff (using approved MACP codes)
15. Access point type (using approved MACP codes)
16. Inspection status (using approved MACP codes)
17. Area photo image reference Internal photo image reference

34.08 MANHOLE COMPONENT OBSERVATIONS

The inspection crew shall complete all fields within the manhole component/observation section of the inspection form. The following information shall be collected:

1. Cover type (solid, vented, bolted)
2. Cover size (top surface diameter in inches)
3. Cover material
4. Number of vent holes
5. Cover/Frame fit (cover to frame fit, MACP codes)
6. Cover condition (MACP codes)
7. Cover insert type
8. Cover insert condition
9. Frame condition
10. Frame seal condition
11. Frame offset distance
12. Frame seal inflow
13. Wall material

14. Interior wall coating
15. Wall diameter
16. Bench present
17. Channel installed
18. Additional remarks relevant to the manhole

34.09 MANHOLE INTERIOR INSPECTION

The inspection crew shall determine the types of defects within the manhole, document each defect on the manhole form and take a photograph of each defect. The manhole chimney, cone, wall, bench, and channel shall be inspected for structural integrity, signs of I/I and the presence of roots. All documentation shall follow NASSCO MACP standards. Each defect will be documented on the inspection form with the following information:

1. Defect number
2. Component of manhole containing defect
3. Defect code (using approved MACP codes)
4. Image Reference (using City approved file naming structure)

34.10 CONNECTING PIPE DETAILS

Each pipe entering and exiting the manhole shall be photographed where possible and inspected to determine diameter, pipe material, debris levels, and rim to invert distance (to 0.1-feet). The pipe inspection will include the following information:

1. Pipe photo (using City approved file naming structure)
2. Pipe direction (incoming or outgoing)
3. Pipe clock positions (6:00 position = outgoing)
4. Pipe diameter
5. Pipe material (using PACP codes)
6. Rim to invert distance (measured to nearest 1/10th of a foot)
7. Pipe special condition (drops, force mains, etc. using approved MACP codes)
8. Debris depth
9. Connecting structure number; if manhole or cleanout, service line clock position, stub-out clock position, etc.
10. Pipe seal condition (using approved MACP codes)
11. Pipe seal roots (using approved MACP codes)
12. Observed pipe defects, obstructions, roots, etc. (using PACP codes)

34.11 MANHOLE SKETCH, MAP UPDATE, AND NOTES

The inspection crew shall complete the manhole plan view sketch noting all connecting pipes. Any special observations or notes may be added to the profile sketch on the field form. Influent and effluent lines in each manhole shall be compared to the existing map and corrections noted in the sketch section of the field form.

34.12 NOTIFICATION OF EMERGENCY CONDITIONS

Inspection crews shall immediately notify the City and/or on-site inspector of any defects posing imminent danger to the public (missing lids, covers broken during inspection, sink holes, etc.) and any observed pipe blockages or potential overflow conditions.

34.13 COMPLETION

Once the inspection is complete the field crew shall make certain the ring is clean and does not have any debris preventing a proper cover fit. The manhole lid shall be replaced, and any displaced items moved back into place.

A list of manholes that could not be fully inspected, along with the problem explanation, shall be forwarded to the City weekly throughout the inspection work. If the Contractor has completed accessible inspections, and the City authorizes, then Contractor may be required to re-mobilize at the same unit price and complete the requested inspections. All re-inspections will be at the same contracted unit price. Any map updates shall be consolidated and forwarded to the City with the submitted inspections.

34.14 PHOTOGRAPH REQUIREMENTS

A. During each inspection the following series of photographs shall be taken:

1. Photograph: During the inspection, a photograph shall be taken of the manhole cover showing location within the roadway, shoulder, or easement as appropriate. Photographs shall be taken of any indications of previous overflows such as watermarks and paper or other debris typical of sewer overflows. Surface photographs shall be oriented in the direction of the outgoing pipe to show the pipeline cover and easement condition. The area photographs should show the manhole visible in the foreground where possible. A minimum of 1 area photo is required.
2. Internal Photograph: Take a photograph of the manhole interior in plan view showing the general arrangement of the incoming and outgoing sewers, manhole walls, and other appurtenances. The internal condition photograph shall be oriented with the direction of the outgoing main line flow at the bottom of the photograph (6:00 position). A minimum of 1 internal photograph is required.
3. Manhole Defect Photographs: During manhole inspections digital photographs shall be taken of all defects. Photographs must clearly and accurately show each defect and correspond to defects and photo numbers logged on the manhole inspection form. A minimum of 1 photo for each observed defect is required
4. Connecting Pipe Photographs: The camera should then be pointed into all incoming and outgoing pipes where possible to capture general conditions within the pipes. Any obvious blockages or defects should be noted using

PACP defect codes. A minimum of 1 photo of each incoming or outgoing pipe is required.

B. During inspections manholes shall be free of steam, fog, water vapor, or other conditions that will impact the quality of photographs.

C. All photographs shall adequately capture the manhole conditions and details of defects. Lighting and camera quality shall provide a clear, in-focus picture of the manhole interior, manhole defects, and manhole. The lighting shall provide uniform light free from shadows or hot spots.

D. If larger than 640 x 480 resolution, then photo will be converted to 640 x 480. Photos less than 640 x 480 are not acceptable and converting upward to 640 x 480 is not acceptable. All photographs shall be resized to 640 x 480 resolution to minimize file size.

E. The images shall be kept electronically, copied to a CD, DVD, or external hard drive. Photographs shall be named according to the photograph naming conventions included herein.

F. All digital photographs shall be referenced on the manhole inspection form and electronic database.

G. All digital photographs shall be renamed in accordance with a photo file naming convention. An example is shown below:

1. Area Photo = Manhole ID, A, Photo Number, jpg
   Example: 3965002A0001.jpg
   Manhole: 39650002
   A=Area Photo
   Photo No.0001
2. Internal Photo = Manhole ID, I, Photo Number, jpg
   Example: 3965002I0001.jpg
   Manhole: 3965002
   I=Internal Photo
   Photo No.0001
3. Manhole Defect Photo = Manhole ID, M, Photo Number, jpg
   Example: 3965002M0015
   Manhole: 3965002
   M=Manhole Defect Photo
   Photo No. 0015
4. Pipe Photo = Manhole ID, P, Photo Number, jpg
   Example: 3965002P0002.jpg
   Manhole: 3965002
   P=Pipe Photo
   Photo No. 0002

34.15 MANHOLE NUMBERING, FORMS, AND DEFECT CODES

The Contractor shall use the City manhole numbering system when performing the inspections for this Project. Manhole numbers will be provided by the City. Defect codes shall conform to those specified in the NASSCO MACP specification.

All City assets will be identified using the established facility identification code (FID) for all inspection reports, geographical exhibits, data sets and asset management tasks. Assets may include, but not be limited to, manholes, clean outs, gravity mains, force mains, air release valves, and conflict structures. Asset FIDs will be provided to the Contractor prior to the start of inspection. Failure to utilize the FID could result in additional inspection at the Contractors expense.

34.16 SITE RESTORATION

After inspecting manholes in an area, the work site shall be cleaned and restored to pre-Work conditions. If manhole is buried and exposed, then restore site by placing material back over exposed manhole. No re-sodding is anticipated or included in the pricing.

34.17 DELIVERABLES

The Contractor will be required to submit the following deliverables at the completion of inspection.

A. During each inspection the following series of photographs shall be taken:
   1. Inspection session header information (see required fields above)
   2. Component observations
   3. Manhole inspection details including defects observed and photo image references
   4. Connecting pipe details
   5. Manhole plan view sketch

B. Marked up field maps detailing map corrections and/or discrepancies noted during inspection.

C. Inspection digital photograph in City approved format and resolution and assigned file names in accordance with the City standard during each inspection the following series of photographs shall be taken.

D. All information and reports shall be exported to the electronic database described in technical specification Section 34.02.

END OF SECTION

THIS PAGE INTENTIONALLY LEFT BLANK

SECTION 35 – CHEMICAL SEALING OF HOST PIPE AND SERVICE CONENCTIONS

35.01 GENERAL

The Work in this section includes furnishing all labor, materials, tools, and equipment for reducing infiltration within the host pipe and service connections to an acceptable level prior to liner installation to ensure that placement and curing is not adversely affected by the presence of excessive infiltration and seal annular space between liners and host pipes at service lateral connections. Accordingly, the Engineer will base acceptance of this portion of the Work on the reduction of infiltration at host pipe joints and other defects to a level that will insure completion liner installation in accordance with these specifications.

Contractor shall furnish all labor, materials, equipment, and incidentals to seal active infiltration at host pipe joints, service lateral connections, and other defects as directed. Sealing shall be from inside the host pipe using a device equipped with a pan and tilt camera and inflatable packer as described herein.

35.02 PRODUCTS

A. Sealing Materials

1. The sealing compound shall be Acrylic base gel -Avanti AV-100, AV-1 18, Urethane base gel — Avanti AV-350 or Acrylate base gel- Deneff AC-400 or approved equal and shall be suitable for use in domestic wastewater collection systems. Handling, formulation and storage of the sealing gel compound shall be in strict conformance with the manufacturer's recommendations. The uncured gel shall be delivered to the site in unopened containers, with the date of manufacture clearly indicated, no uncured gel manufactured more than six months prior to the date of application shall be utilized. Residual sealing materials shall be removed from the wastewater collection system after injection to ensure no flow reductions, restriction or blockage occur.

2. Icoset additive shall be added to the sealing compound for gel strengthening. The quantity of Icoset additive will be according to the manufacturer recommendation. The sealing compound admixture shall be adjusted to meet specified viscosity and reaction time.

35.03 SUBMITTALS

A. The Contractor shall submit the following to the Engineer in accordance with Specification Section 03 - Submittals

1. Gel compounds
2. Installation equipment

35.04 EQUIPMENT

A. General

1. Sealing equipment shall consist of two separate pumping systems capable of supplying an uninterrupted flow of sealing materials to completely fill the voids. Pumps, fittings and hoses shall be designed to transport a high viscosity material and shall not be affected by acetone or ketone solvents.

2. Sealing materials shall pass from the pumping system through instant reading, controlled flow meters and then through a dual hose system into the sealing device. The device (referred to hereafter as a packer) shall be a cylindrical case of a size less than pipe size, with the cables at either and used to pull it through the host pipe.

3. Generally, the equipment shall be capable of performing the specified operations in pipes where flows do not exceed 25 percent without resorting to any method of flow control.

4. Air impervious inflatable sleeves shall be mounted over the cylinder with the ends of the sleeve sealed to the ends of the casting. The sleeves shall be so constructed that they can be pneumatically expanded from the center to both ends. The center portion of the sleeve shall be sealed to the casing by a broad confining band. When the packer is inflated. Two widely spaced annular bladders shall be formed, each having an elongated shape and producing an annular void around the confined portion of the sleeve. No sealing device which is expanded mechanically nor where the expansion sleeve is not continuous will be allowed in order to prevent damage to the pipe from excessive amounts of sealing pressures or air leakage in the center area of such sealing device. The sleeve shall be a low void packer.

5. Lateral service sealing is accomplished with a "Logiball" lateral packer. The objective of the lateral service packer is to seal the lateral service connection to the main pipe and the first 18-inches of the service lateral.

35.05 EXECUTION

A. General

Sealing shall be by the pressure grout method. Generally, this shall be accomplished by forcing chemical sealing gel materials through a system of pumps and hoses into and through the joints and other defects of the host or lateral pipe from the packer within the pipe. Jetting or driving pipes from the surface that could damage or cause undermining of the wastewater system shall not be allowed.

B. Grout Mixing

1. The Contractor shall mix all grout at the job site in the presence of the Engineer. No grout will be used on the job which has been mixed off site and is in the Contractor’s

tank when the truck drives on site. The Contractor's personnel shall follow the manufacturer's recommendations for the mixing and safety procedures to protect personnel from any adverse effects of the grouting compounds. Powder and additives shall be added and mixed at rates, which will minimize the formation of lumps within grout tanks solutions. All additives will be thoroughly mixed in the grouting component tanks.

2. Prior to application of grout for seal purposes. a pump test will be performed to determine if equal quantities of grout are being pumped from the grout component tanks. Separate containers shall be used to capture the discharges from the grout component tanks. One gallon of grout shall be pumped, and the pump strokes shall be counted. If unequal quantities are being pumped, the Contractor shall take corrective action. The pump test shall be repeated until equal quantities are pumped from the grout tanks.

3. During the grouting process, the Contractor shall monitor the grout component tanks to make sure that equal quantities are being pumped. If unequal levels are noted in the tanks. the pump test shall be repeated as described above. At the beginning of each day, when new batches of grout are mixed and when grout additives are modified to change gel times, a test shall be performed with quantities of grout to determine the grout mixture gel time. The Contractor shall have accurate scale(s) which shall be used to weigh the various non water grout solution components.

C. Host Pipe Sealing by Pressure Grout Method

1. The packer shall be positioned over the area of infiltration by means of a measuring device at the surface and the closed circuit television camera in the pipe. Accurate measurement of the location of the defect to be sealed shall be made, using a portion of the packer as a "Datum" of measurement point or target. Such measurement, target or point shall also be used to obtain necessary measurement for positioning injection area of packer over the area to be sealed.

2. The packer sleeves shall then be pneumatically expanded and shall seal against the inside periphery of the pipe to form a void area at the joint or defect now completely isolated from the remainder of the pipe segment.

3. Into this isolated area sealant materials shall be pumped through the hose system at controlled pressures, which are in excess of groundwater pressures. The pumping, metering and packer shall be integrated so that proportions and quantities of materials and pressures for materials and sealing gel can be instantly monitored and regulated in accordance with the type and size of the leak, percentage of voids being filled, type of soil surrounding the pipe and the rate of flow of the sealing gel solution in relation to the back pressures. These parameters should follow the manufacturer's specifications and guidelines.

4. Upon completion of the injection, the television camera shall be moved to a position to observe and inspect the results of the injection. If inspection shows the seal was

not effective, the process shall be repeated until infiltration has been reduced to an acceptable level for liner installation.

5. The packer shall be moved forward, wiping away the excess grout. The excess sealing material removed from the joint by the grouting equipment shall be flushed or pushed forward to the next downstream manhole, removed from the wastewater system and disposed of by the Contractor as specified by disposal of debris resulting from cleaning operations. in no case shall excess grout material be allowed to accumulate and be flushed down the system.

6. it is intended that chemical sealing shall be performed on host pipe immediately prior to the installation of the liner unless otherwise authorized by the Engineer. The Contractor shall notify the City Inspector a minimum of 48 hours prior to commencing Chemical sealing operation. The quantity of grout used shall be verified by the City Inspector.

7. Any part of the wastewater system damaged as a result of the Contractor's operations shall be promptly repaired by, and at the expense of, the Contractor.

8. All activities shall be video inspected during the sealing operation. The video shall be submitted to the Engineer for review and for permanent record. The video inspection shall comply with the requirements of the Technical Specification Section headed "Closed Circuit Television Inspection".

D. Lateral Service Sealing by Pressure Grout Method

1. Air testing laterals shall be accomplished by isolating the area to be tested with the lateral service packer and by applying positive pressure into the isolated void area. A pan and tilt camera shall be used prior to positioning the lateral packer. A sensing unit shall be used for continuous monitoring of the void pressure. This sensing unit shall be located within the void area and will accurately transmit continuous pressure readout to the control panel.

2. Joint testing and grouting for laterals will utilize a "Logiball" type system. The packer ends (end elements, sleeves) shall be expanded using controlled air pressure. The expanded ends shall seal against the inside periphery of the pipe to form a void area at the lateral, now completely isolated from the remainder of the pipe segment. Into this isolated area, sealant materials shall be pumped through the hose system at controlled pressures that are in excess of groundwater pressures. The pressure device shall accurately show psi to the nearest one tenth (0.1) pound and shall instantly respond to and record any change in the void pressure. The joint shall be tested with a gauge pressure of one-half psi per foot of depth of lateral pipe as measured by the deeper of the two manholes between which the lateral is located, or a minimum of 4 psi, whichever is larger. The pumping unit, metering equipment, and the packer device shall be designated so that proportions and quantities of materials can be regulated in accordance with the type and size of the leak being tested or sealed, percentage of voids being filled, type of soil surrounding the pipe and the rate of flow of the sealing gel solution in relation to the back pressures.

These parameters should follow the manufacturer's specifications and guidelines and be reviewed with the Engineer prior to the beginning of any grouting activities.

3. The test procedure will consist of applying air pressure into each isolated void area. To isolate a void, a lateral sealing packer shall be positioned straddling the lateral. The operator shall insert an inflatable inversion tube and inflate the packer ends to isolate the lateral. Once the designated pressure in the isolated void is displayed on the meter of the control panel, the application of air pressure will be stopped and a thirty-second waiting period will commence. The void pressure will be observed during this period. If the void pressure drop is greater than that allowed in the following Air Test Table, the lateral shall be considered to have failed the air test and shall be grouted as specified herein.

Air Test Table

Initial Void Pressure (psi)	Void Pressure After 30 Seconds
12-11	4.8-4.4
11-10	4.4-4.0
10-8	4.0-3.6
9-8	3.6-3.2
8-7	3.2-2.8
7-8	2.8-2.4
6-5	2.4-2.0

4. After completing the air test for each individual lateral specified herein, the lateral packer shall be deflated, with the void pressure meter continuing to display void pressure. If the void pressure does not drop to approximately zero, the equipment shall be adjusted to provide a zero void pressure reading at the monitor.

5. An air pre-test is not required for lateral sealing of service connections in main pipes that have been lined, as lateral sealing is required regardless of air test results. Pre and post-tests, and quantity of grout pumped shall be logged.

6. lateral sealing begins if the lateral does not pass the air test as described above. The lateral packer shall remain in position, thus maintaining the isolated void. Chemical grout sealant will be pressure injected through the lateral packer into the annular space between the inversion tube and the lateral pipe. Under pressure, the grout material shall be then forced out into the soil through leaking joints and pipe defects. The amount of chemical grout pumped is based on the number of pump strokes delivered to each lateral. The number shall be recorded on the sealing log.

7. Upon completion of the lateral sealing procedure, the lateral shall be air tested to verify the sealing of the connection. The air test will be the same as outlined above. If the sealed lateral fails the air test, the grouting procedure shall be repeated at no additional cost to the City. This sequence of air testing, grouting and subsequent air testing shall be repeated until either the lateral is sealed or it is determined that the grout consumption is too high and may result in the blockage of the lateral pipe. The final determination to stop subsequent attempts to seal a lateral will be made jointly

between the Engineer and the Contractor.

8. The Contractor shall verify lateral flow after the successful sealing of each lateral. With the lateral packer in position, the inversion tube shall be retracted and air pressure injected into the lateral. Should a pressure build in the lateral and not drop to zero in a few seconds, the packer will be moved off the connection and the connection shall be viewed with a television camera. With the camera viewing the connection point, an attempt will be made to obtain a water flush by the occupant. If no water is viewed during this procedure, it shall be assumed that the building service connection is blocked with grout and the responsibility to clear the lateral will be the Contractor's at no additional cost to the City.

9. The Contractor shall attach a notification form to the door of each home or building for which laterals have been grouted. This notification to the occupant shall state the following:

   The lateral service connection to (address) _____was grouted on (date) _____

   If any blockage of wastewater flow occurs, please call (emergency number)

   Any blockages that occur as a result of the lateral sealing operations will be cleared by the Contractor.

10. All activities shall be video inspected during both the air testing and sealing operation. The video shall be submitted to the Engineer for review and for permanent record. The video shall display at a minimum the date, manhole numbers, footage to the lateral, and void pressure readout. In addition, the data obtained during this operation shall be recorded on a lateral testing and sealing log provided by the Contractor. The log shall specify conditions of each service lateral sealed, break-in-service connection, lined pipe, etc.

E. Cleanup

Residual sealing materials that extend into the pipe, reduce the pipe diameter, or restrict the flow shall be removed and disposed of by the Contractor at an approved site. Sealed joints shall be left reasonably “flush” with the existing pipe surface. Excessive residual sealing materials in the system shall be cleaned to remove the residual materials.

F. Disposal

Furnish equipment for collection of cleaning solvents used in the cleaning of the sealing equipment. Collected solvents shall be disposed of by an approved solvent recovery process. Disposal of cleaning solvents into the wastewater system or into natural watercourses will be strictly prohibited.

G. Wastewater Flow Controls

When wastewater flows are above the minimum requirements or inspection of the complete periphery of the pipe is necessary to effectively conduct the inspection and sealing operations, one or more of the following methods of flow control shall be used.

1. A plug shall be inserted into the pipe at a manhole upstream from the section to be inspected and/or sealed. The plug shall be so designed that all or any portion of the wastewater flows can be released. During the inspection portion of the operation, flows shall be shutoff or substantially reduced in order to properly inspect the pipe at the invert. After the inspection is complete, flows shall be restored to normal or not more than 1/4 of the pipe diameter during the sealing operation. The Contractor will be responsible for preventing backups and overflows.

2. Where pumping is required, in the opinion of the Engineer, to assure completion of the inspection and sealing work, the Contractor will be required to furnish pumping and bypassing equipment. Refer to the requirements of Specification Section 16 ”Bypass Pumping” or Specification Section 01 "General”.

END OF SECTION

THIS PAGE INTENTIONALLY LEFT BLANK

SECTION 36 – REMOVAL OF PROTRUDING SERVICE CONNECTIONS

36.01 GENERAL

The Work in this section includes furnishing all labor, materials, tools, and equipment for internally removing and sealing protruding service connection taps and excess mortar in wastewater pipe segments scheduled to be rehabilitated.

Remove only those taps that protrude sufficiently as specified herein which are determined to interfere with the pipe rehabilitation. The intent is to remove the minimum number of protruding taps necessary to allow the entire pipe segment to be rehabilitated.

The Contractor shall maintain wastewater flows, including pump around pumping, as required at all times during the performance of this work.

The Contractor shall remove all dirt and debris caused by tap removal. Excess material will not be allowed to enter the wastewater system and carried to downstream reaches.

The Contractor is advised that this Contract requires work in active wastewater collection systems and shall follow all federal, state and local requirements for safety in confined spaces. The Contractor shall conform to all guidelines by the Occupational Safety and Health Administration (OSHA) Federal Regulations; 29 CR Ch. XVII, Section 1910.146 Confined Space Entry.

36.02 PRODUCTS

A. Equipment

1. Protruding taps shall be removed using an internal, remote-controlled intruding pipe remover. Excavation and replacement of protruding taps will not be allowed except under special situations authorized in writing by the Engineer.
2. The equipment shall consist of a main body containing a rotating head assembly equipped with carbide cutting edges. The rotating cutting head shall be driven by air or by electricity and shall be capable of cutting concrete, vitrified clay pipe or other materials commonly used for pipe construction with the exception of cast iron or steel.
3. The equipment shall be self-propelled or pulled through the pipe using winches and a cable set up between adjacent manholes.
4. The equipment shall be positioned using a TV camera in conjunction with the cutter assembly.

36.03 EXECUTION

A. Performance

1. The Contractor shall remove all service taps specified herein that inhibit pipe segment rehabilitation methods. The Contractor is required to remove protruding

taps to the point where they are flush with the inside wall of the pipe.

2. The Contractor shall maintain a complete record of all taps that were removed and furnish two (2) copies of this record at the completion of this work.
    a. The list shall show the Work Order Number, date, street, and pipe segment (by manhole numbers), station and location (left, right and top) of each tap removed.
    b. The list shall also show similar data for any taps that were not successfully removed, as well as the reason why removal was unsuccessful.
3. The Contractor shall protect existing main pipe and service laterals from damage caused by improper use of the equipment. Damage to a main pipe or service lateral caused by removal of a tap shall be repaired immediately, as directed by the Engineer, at the Contractor's expense. Any increase in infiltration at the service connection caused by the Contractor's removal of the protruding tap shall be chemically sealed by the Contractor at no additional cost to the City, in accordance with the Technical Specification Section headed "Chemical Sealing of Service Connections".
4. The Contractor shall remove all dirt and debris from the wastewater system following completion of tap removal.

B. Inspection

1. Contractor shall televise protruding service connection tap prior to removal, recording location and footage to service connection. Following successful completion of removal, Contractor shall perform post-construction television inspection.
2. Post-cleaning and post-rehabilitation television inspections shall be recorded on the same video as specified in the Technical Specifications Section headed "Closed Circuit Television Inspection." Video and data shall be submitted to the Engineer. Video and data shall become the property of the City.

END OF SECTION

SECTION 37 – WASTEWATER STRUCTURE REHABILITATION

37.01 GENERAL

The Work in this section includes furnishing and installing wastewater structure components and coatings for rehabilitation, structural enhancement, and corrosion protection of existing wastewater manholes, for the various diameters listed on the Bid Form. Wastewater structures include, but are not limited to, manholes, vaults, junctions, and wet wells.

The Contractor shall furnish all materials, labor, equipment, and services necessary for wastewater manhole component replacement and coating installation including: traffic control, bypass pumping and/or diversion of wastewater flows, void repair, inflow/infiltration elimination, surface preparation, structure component and coating installation, testing, surface restoration, and cleanup of the Work site.

37.02 GOVERNING STANDARDS

The following Standards are referenced in this section:

ASTM	C 109	"Standard Test Method for Compressive Strength of Hydraulic Cement Mortars"
ASTM	C 157	"Standard Test Method for Length Change of Hardened Hydraulic-Cement, Mortar, and Concrete"
ASTM	C 293	"Standard Test Method for Flexural Strength of Concrete (Using Simple Beam With Center-Point Loading)"
ASTM	C 307	"Standard Test Method for Tensile Strength of Chemical-Resistant Mortar, Grouts, and Monolithic Surfacing"
ASTM	C 308 Modified	"Standard Test Method for Working, Initial Setting, and Service Strength Setting Times of Chemical-Resistant Resin Mortars"
ASTM	C 309	"Standard Specification for Liquid Membrane-Forming Compounds for Curing Concrete"
ASTM	C 321	"Standard Test Method for Bond Strength of Chemical-Resistant Mortars"
ASTM	C 496	"Standard Test Method for Splitting Tensile Strength of Cylindrical Concrete Specimens"
ASTM	C 531	"Standard Test Method for Linear Shrinkage and Coefficient of Thermal Expansion of Chemical-Resistant Mortars, Grouts, Monolithic Surfacing, and Polymer Concretes"

ASTM	C 579	"Standard Test Methods for Compressive Strength of Chemical-Resistant Mortars, Grouts, Monolithic Surfacing and Polymer Concretes"
ASTM	C 596	"Standard Test Method for Drying Shrinkage of Mortar Containing Hydraulic Cement"
ASTM	C 580	"Standard Test Method for Flexural Strength and Modulus of Elasticity of Chemical-Resistant Mortars, Grouts, Monolithic Surfacing, and Polymer Concretes"
ASTM	C 666	"Standard Test Method for Resistance of Concrete to Rapid Freezing and Thawing"
ASTM	C 882	"Standard Test Method for Bond Strength of Epoxy-Resin Systems Used With Concrete By Slant Shear"
ASTM	C 905	"Standard Test Methods for Apparent Density of Chemical-Resistant Mortars, Grouts, Monolithic Surfacing, and Polymer Concretes"
ASTM	D 543	"Resistance of Plastics to Chemical Reagents"
ASTM	D 638	"Tensile Properties of Plastics"
ASTM	D 695	"Compressive Properties of Rigid Plastics"
ASTM	D 790	"Flexural Properties of Unreinforced and Reinforced Plastics"
ASTM	D 1622	"Standard Test Method for Apparent Density of Rigid Cellular Plastics"
ASTM	D 1623	"Standard Test Method for Tensile And Tensile Adhesion Properties of Rigid Cellular Plastics"
ASTM	D 2126	"Standard Test Method for Response of Rigid Cellular Plastics to Thermal and Humid Aging"
ASTM	D 2584	"Volatile Matter Content"
ASTM	D 2842	Standard Test Method for Water Absorption of Rigid Cellular Plastics"
ASTM	D 3846	"Standard Test Method for In-Plane Shear Strength of Reinforced Plastics"

ASTM	D 4258	"Standard Practice for Surface Cleaning Concrete for Coating"
ASTM	D 4259	"Standard Practice for Abrading Concrete"
ASTM	D 4541	"Standard Test Method for Pull-Off Strength of Coatings Using Portable Adhesion Testers"
ASTM	D 4787	"Standard Practice for Continuity Verification of Liquid or Sheet Linings Applied to Concrete Substrates"
ACI	503	"Use of Epoxy Compounds with Concrete"
SSPC/ NACE	SP-13/ NACE 6	"Surface Preparation of Concrete"

37.03 DEFINITIONS

A. Coating Systems: includes surface description, surface preparation, required dry film thickness, and the number and application procedure of the prime and finish coatings. Systems are defined and identified in the article headed "Coating System Specification Sheets" in this Section of the Technical Specifications.

B. Field Coating: the application of the coating system in an existing manhole or structure.

C. Dry Film Thickness (DFT): the thickness of a fully cured coating or coating system.

D Wet Film Thickness (WFT): the thickness of a coating while wet.

E. Volatile Organic Content (VOC): the portion of a coating that is a compound of carbon, is photo chemically reactive, and evaporates during drying or curing, expressed in g/L or lbs/gal as defined in ASTM D3960.

F. Solvents: Those chemicals used to dilute the liquid coating either for thinning the coating or for cleanup.

G. Lead Containing: any coating that contains any detectable amount of lead.

H. Hard To Reach: areas that may not be accessible with spray equipment but can be reached by brush, mitt, or roller.

I. Inaccessible Areas: areas such as back-to-back angles, skip welds, and other areas that a brush, mitt, or roller cannot contact the surface.

J. Manhole Floor: the bench, channel and invert of the manhole containing the concrete/brick floor of a manhole generally shaped as a fillet to direct incoming flows to the outlet piping and to minimize solids buildup, the wall/bench joint, the shaped flow-ways within the bench, the bench/channel joint, and the invert which is the line of the lowest elevation along the bottom of the channel(s).

K. Manhole Wall: that part of the manhole extending from the bench/wall joint to the bottom of the cone/corbel.

L: Manhole Cone/Corbel: the reducing section which tapers concentrically or eccentrically from the top wall joint to the bottom of the chimney or the ring (frame) casting where there is no chimney.

M. Manhole Chimney: the narrow vertical section built from brick or concrete adjusting rings extending from the top of the cone/corbel to the bottom of the frame casting.

N. Leaks/ infiltration: presence of water, or indications of water, inside the manhole caused by subsurface water entering the manhole from the exterior through cracks, fractures, holes, broken seals, or other means.

O. Inflow: surface water generally entering into a manhole through or under the manhole cover, frame, frame seal, chimney wall, or at the cone/corbel chimney joint.

P. Void: as defined in ACI.

Q. pH: a measure of acidity and alkalinity.

R. Bug Holes: small regular or irregular cavities, not exceeding 15rnm in diameter, resulting from the entrapment of air bubbles of formed concrete during placement and compaction. Re-rounding shall not be permitted.

37.04 QUALIFICATIONS

A. The Contractor shall be certified and/or licensed by the coating system manufacturer(s) as an approved Applicator for the products referenced in this section.

B. The Applicator shall be the person responsible for the actual work, either as the foreman or the person actually applying the coating system.

37.05 SUBMITTALS

The Contractor shall submit the following to the Engineer

A. List of materials including coatings, repair materials, grouts, and blasting abrasive material proposed for use.

B. List of equipment and certification by the individual coating manufacturer that the application equipment is sufficient to adequately apply the coating.

C. For each coating system, provide the manufacturer's application guidelines including:
1. Surface preparation guidelines.
2. Primer type, where required.
3. Maximum wet and dry thickness per coat.
4. Minimum and maximum curing time between coats, and atmospheric conditions for each.
5. Curing time before submergence in municipal wastewater.
6. Thinner to be used with each coating.
7. Ventilator requirements.
8. Allowable application methods.
9. Maximum storage life.
10. Material safety data sheets.
11 . Interpretation of batch code numbers.
12. Minimum and maximum relative humidity requirements.
13. Minimum and maximum surface temperature requirements.
14. Minimum and maximum ambient temperature requirements.
15. Manufacturer's recommended application procedure.

D. Shop Drawings for frame and cover castings.

E. Product Data for manhole cover inserts.

F. Provide information on planned surface preparation procedures including, when relevant. abrasive media, minimum water cleaning pressure and flow rate (e.g. 5000 psig @ 4 gpm) • nozzle types (e.g. zero degree rotating nozzle), etc. for coating systems specified. Surface preparation methods shall be based upon the conditions of the substrate and the requirements of the protective coating to be applied. Whichever method(s) are used, they shall be performed in a manner that provides a uniform, sound, clean neutralized surface. At the request of the Engineer, the Contractor shall test for adverse chemical conditions that may hinder overall product performance.

G. Maintenance of Traffic Plan including, but not limited to, specific dates that the Maintenance of Traffic Plan shall be in place.

H. Wastewater Bypass Pumping plan, where required.

I. List of all test equipment to be used, copies of the adhesive and equipment's instructions, adhesives, calibration procedures, MSDS sheets, and copies of all reference standards related to the test equipment.

37.06 QUALITY ASSURANCE/ QUALITY CONTROL

A. General
1. Deviations from the manufacturer's printed instructions will not be allowed unless approved in writing by the Engineer.
2. In the event of a discrepancy between the Contractor's, manufacturer's or City Inspector's testing equipment, all parties shall check equipment in question for proper function and calibration.

3. Where there is a conflict between the manufacturer's recommendations and these Technical Specifications, the manufacturer's recommendations shall govern.
4. Test equipment and procedures shall be the same throughout the Contract.
5. Quality Control: Contractor shall be responsible for the quality control of the coatings applied including surface preparation, testing, verifying access, dimensions, configuration, pipe connections, appurtenances, and details of each manhole prior to commencing any Work as well as remedial work to be completed as identified by inspection at the given check points.
6. Quality Assurance: City Inspector shall approve the Contractor's Work regarding surface preparation and quality control of the coatings applied. This documentation in no way relieves the Contractor of the responsibilities described under this Contract. The City Inspector may conduct tests on ambient conditions, pH and surface temperature, coating(s) applied, wet and dry film thickness, coating type coating batch numbers, and other tests.

B. QA/QC Check Points

1. pH Testing: Prior to surface preparation for cementitious coating application, measure and record pH of the manhole interior surface and other parameters as required by coating manufacturer to verify acceptable existing substrate conditions for application of the specified product and to document compliance with warranty requirements. After surface preparation and prior to coating system being applied to the interior of a manhole (excluding coatings to only the interior of a chimney), measure and record pH of the manhole interior surface in at least two locations as approved by the City Inspector. Adjust if required by the coating system manufacturer and per NACE 6/SSPC SP 13 Table 1 for severe service.
2. Concrete surface tensile strength: After surface preparation (including repair and resurfacing products) and prior to a polymer coating system being applied to the interior of a manhole (excluding coatings to only the interior of a chimney and spot type only repairs) measure and record the results of a minimum of two concrete surface tensile strength tests, without glue failures, per manhole at locations as directed by the City Inspector. Tests shall be per ASTM D4541 as modified herein. Utilize a 20 mm test dolly and portable pull-off adhesion tester. Document test failure mode. Failure of the dolly adhesive shall require retesting. If the concrete surface tensile strength is less than 200 psi (NACE 6/SSPC SP 13 Table 1 for light service) notify manufacturer and Engineer for approval before applying coating. (Destructive testing as defined herein shall be performed on the initial manhole coated with a particular coating system. After the initial test. 10% of the manholes coated may require testing as selected by the Engineer. Initial and additional testing required due to test failures shall be at the Contractor's expense.)
3. Wet Film Thickness (WFT): During coating system application, measure and record WFT of the coating in at least four locations in the manhole (one in a chimney) or as directed by the City Inspector. Use an industry standard WFT gage (ASTM D4414) designed for thick coatings. Minimum W FT thickness is specified for each product in the article headed "Coating System Specification Sheets" in this Section of the Technical Specifications.
4. Surface Moisture: After preliminary surface preparation and prior to a polymer coating system being applied to the interior of a manhole, measure and record surface moisture of the manhole interior surface in at least two locations per ASTM

D426 and use a DELMHORST ACCUSCAN moisture meter using a 0 to 100 relative scale.

5. Blotter Test: Upon start up of abrasive blasting, compressed air shall be checked daily for oil and water by blotter test per ASTM D4285.
6. Anchor Profile of Surface: After preliminary surface preparation and prior to coating application to the interior of a manhole (excluding coatings only for interior of a chimney) compare and record anchor profile by comparison to various grits of sandpaper.
7. Surface Preparation: Shall be accepted by the coating system manufacturer prior to the application of the coating system.
8. Ambient Conditions: Measure and record the test results for relative humidity, manhole wall surface temperature, dew point and ambient temperature to ensure compliance for materials applied.
9. Coating Adhesion: After polymer coating system application and cure, measure and record the results of a minimum of two adhesion tests, without glue failures, per manhole at locations within the manhole as directed by the City Inspector. Tests shall be per ASTM D4541 as modified herein. Utilize a 20 mm test dolly and portable pull-off adhesion tester. Document test failure mode, whether failure is within the substrate, failure is within the coating, or failure is at the coating/substrate interface. Failure of the dolly adhesive shall require retesting. If the testing damages the coating, spot repair the test location while following manufacturer's recommendations. Failure at the coating/substrate interface with less than 10% of substrate adhered to the coating and less than 100 psi pull-off strength, shall be deemed a coating system failure and the Contractor shall remove the coating to soundly adhered edges, re-perform surface preparation procedures, and recoat the failed surfaces, at the Contractor's expense. Low pull-off strength values <150 psi) may require additional testing/evaluation to determine potential adhesion defects at the sole discretion of the Engineer. (Destructive adhesion testing as defined herein shall be performed on the initial manhole coated with a particular coating system. After the initial test, 10% of the manholes coated may require testing as selected by the Engineer. Initial and additional testing required due to test failures shall be at the Contractor's expense.)
10. Holiday Testing: The finished polymer coating shall be inspected per ASTM D-4787 "Continuity Verification of Liquid or Sheet Linings Applied to Concrete Substrates", using high-voltage spark testing equipment with variable settings. Test voltage shall be set at an initial 100 volts per mil (4,000 volts per mm) of specified film thickness, and then increased as needed to compensate for relative conductivity of the concrete substrate by spark testing an induced holiday at furthest extension of test probe from grounding location. Once test voltage is determined, it shall be used throughout that area, and then re-determined again every time a new ground is made. Detected holidays shall be marked and repaired per coating manufacturer's recommendations. Contractor shall be responsible to provide necessary Holiday Testing equipment for final inspection. Pinhole testing shall be accomplished using a Tinker Razor Holiday Detector, San Gabriel, CA, Model AP/W or an Engineer approved equal model. A test voltage of 100 volts/mil is recommended. This test shall identify and allow for the repair of pinholes in order to ensure a continuous pinhole-free lining. (Testing shall only be required where full depth manhole coating is specified.)

11. Exfiltration Testing: If necessary or as required perform exfiltration testing according to the following guidelines: Manholes and wetwells 6 feet deep or less should see less than one (1) inch of loss in five (5) minutes. Manholes and wetwells greater than 6 feet depth use one (1) inch plus an additional one eight (1/8) inch per additional foot of depth.
12. Vacuum Testing: May be conducted per ASTM C1244-93 only after rehabilitated structure has cured for a minimum of seven (7) days.

37.07 CONTAINMENT AND SITE CONDITIONS

A. No grouting materials, solvents, chemicals, blasting media, or debris of any sort shall be allowed to be discharged to the wastewater collection system. Water from pressure washing (>100 psi) may be allowed to enter the system after any debris has settled, when it demonstrated to the satisfaction of the City Inspector that no debris will enter the collection system. Water applied at less than 100 psi and containing common, household strength detergents, which are used strictly for rinsing the interior surfaces of the structure, may be allowed into the system as long as no debris are washed into the system. All odors noticeable by the average person shall be confined to an area within 10 feet of the structure. The Contractor shall provide odor control equipment or methods so odors are confined and in conjunction with closed space entry or other safety requirements.

B. Provide environmental controls such as ventilators if the cure time of the coating is slowed by the presence of coating or solvent vapor, and heaters and/or dehumidification as necessary to meet coating application requirements.

C. Applicator shall conform to all local, state, and federal regulations including those set forth by OSHA, RCRA, and the EPA.

37.08 WARRANTY

The Contractor shall unconditionally guarantee all manhole rehabilitation Work in this Contract against defects of materials and workmanship for a period of 3 years under normal use, operation, and service in accordance with the requirements of the Supplemental General Conditions article headed "Guarantee Period".

The Contractor and cementitious coating manufacturer shall warrant all cementitious manhole coating Work in this Contract against defects of materials and workmanship for a period of 10 years under normal use, operation, and service. The Contractor shall provide all testing and prepare all required installation reports, warranty registration documentation, etc. and submit same to the coating manufacturer and Engineer on behalf of the City. The Contractor shall furnish a warranty certificate from the cementitious coating manufacturer indicating acceptance and commencement of the warranty period. The Contractor and coating manufacturer shall, within sixty (60) days of written notice thereof, propose an acceptable method and repair any defects (including all labor and materials) that may develop during the warranty period in a manner acceptable to the Engineer and at no cost to the City. Defects shall be defined as: visible leakage of groundwater into the manhole or separation of any part of the coating from the host manhole or coating interfacing joints.

37.09 MATERIALS

A. Coating Products: Pure calcium aluminate cementitious manhole coating systems shall be Product A or B. Reinforced polymer manhole coating system shall be Product C, D, E, F, G, or H. Approved equal must be submitted for review and approval by the Engineer and City prior to bid.

B. Repair and Resurfacing Products: Repair materials must be compatible with specified manhole coating products and selected to minimize curing time. The following products may be accepted and approved as compatible:

1. Deneef AC 40, Avanti AV 100, or approved equal pressure grout for infiltration elimination.
2. 100% solids, solvent free epoxy grout specifically formulated to be suitable for top coating with the specified coating product(s}.
3. Factory blended, rapid setting, high early strength, fiber reinforced, non-shrink repair mortar that can be troweled or pneumatically spray applied, and specifically formulated to be suitable for top coating with the specified coating product(s}.
4. Products specifically designed for thin (1/4-inch or less) applications shall be used for channels needing to be raised to match or transition with CIPP (cured-in-place pipe) liners. Product shall be SikaTop 123 PLUS, or approved equal. Where manholes with CIPP liners are scheduled to receive a coating, any channel repair materials shall be as recommended by the specific coating manufacturer.

C. Brick Masonry and Precast Concrete Grade Adjustment Rings

1. Bricks shall be new, first quality, sound, hard, uniformly burned, regular and uniform in shape and size. Under burned or salmon brick shall not be acceptable. Only whole brick shall be used. Bricks shall conform to ASTM C32, Grade SS.
2. Precast concrete grade adjustment rings shall conform to the requirements of ASTM C 478. Precast adjustment rings shall not be less than 2 inches thick or be of multiple piece construction. To accommodate steep surface grades, non-uniform precast grade adjustment rings may be manufactured to 2 inches thick on one side and 3 inches thick on the opposite side.
3. Precast concrete grade adjustment rings shall provide structural capacity equal to or greater than the existing or specified manhole frame casting and shall not affect the opening size or surface appearance.
4. Mortar shall be factory blended, rapid setting, high early strength, fiber reinforced, non-metallic, chloride free, non-shrink or low-shrink repair mortar that can be troweled.

D. Frame and Cover Castings

1. Grey Iron castings shall conform to the requirements of ASTM A48 Class 35 B, unless otherwise specified, and be designed for HS-20 load rating.
2. Castings shall be manufactured true to pattern, and component parts shall fit together in a satisfactory manner. They shall be smooth and well cleaned by shot blasting. Circular manhole frame and cover castings shall be furnished with machined horizontal bearing surfaces. Frame and cover castings of the same nominal size shall be interchangeable.

E. Internal Chimney Sealant
1. The chimney sealant shall be minimum 100 mils thick of corrosion resistant aromatic flexible urethane resin coating applied to the inside wall of the chimney and manhole frame casting. The product shall have a minimum elongation of 800% and a Durometer of 75. The seal shall remain flexible allowing repeated vertical or horizontal movements of the manhole frame due to frost lift, ground movement or the thermal movement of pavements.
2. The chimney sealant shall have a minimum tensile and adhesion strength of 1150 PSI and 175 lb. per linear inch respectively. The chimney sealing system shall conform to the physical requirements of ASTM 0412. The chimney sealant shall be Flex-Seal Utility Sealant as manufactured by Sealing Systems. Inc. or approved equal.

F. Manhole Cover Insert
1. The insert body shall be manufactured of 304 stainless steel with a minimum thickness of 18 gauge. The insert shall have a deep-dish bowl design to allow for easy removal of the manhole cover. The insert shall be designed to provide a sufficiently loose fit in the manhole frame casting to allow for easy removal.
2. The insert body gasket shall seal against the frame casting, be made of closed cell neoprene, and affixed to the insert body with a pressure-sensitive adhesive. The gasket shall have a minimum thickness of 1/8 inch and be installed by the manufacturer.
3. The insert body shall have a handle made 3/16" plastic coated 304 stainless steel cable installed on the side of the bowl and attached with two 304 stainless steel round head bolts with flat washers and self-locking nuts.
4. The manhole cover insert and components shall be manufactured of materials resistant to corrosion from atmospheres containing hydrogen sulfide and dilute sulfuric acid. The manhole cover insert shall be InflowShield as manufactured by Inflow Systems, Inc. or approved equal.

G. Standardization: Materials, supplies, and articles provided shall be the standard products of the manufacturers and coating system specified. Coatings in a particular system shall be the products of a single manufacturer.

H. Delivery, Storage and Handling: Deliver materials for field application to the job site in their original, unopened, undamaged containers. Each container shall bear the manufacturers name brand, batch number, date of manufacture, and storage life. Coatings shall be stored in enclosed structures and shall be protected from weather, excessive high or low temperatures, and spills. Coatings exceeding storage life recommended by the manufacturer or that have been visibly damaged shall be removed from the site. Coating materials are to be stored and handled in accordance with their material safety data sheets.

37.10 REPAIR & PREPARATION

A. Repair of Bench and Channel: Manhole bench, flow channels, and inverts shall be repaired and/or constructed as directed to provide smooth flow characteristics and transition of flow through the manhole.

1. Contractor shall prepare, clean, and repair/rebuild manhole bench and flow channel(s) in the same manner as described above. Remove obstructions and loose materials from bench prior to shaping the channel and invert. Using brick and repair/resurfacing mortar, form a smooth, U-shaped channel having a minimum depth of one-half pipe diameter across the floor of the manhole using approved manhole rehabilitation materials. The top edge of the bench at the manhole wall shall be set at an elevation above one-half diameter of the adjacent pipe(s) and sloped at 1-inch per foot to drain toward the flow-through channel and outgoing pipe, and to intersect the channel edge at the one-half diameter level. Active flow shall be diverted as required to allow sufficient setting time for material used.
2. Form a smooth transition with a reshaped channel invert and a raised manhole bench to eliminate sharp edges on the pipe, bench, channel, or invert. Build up and smooth the invert of manhole to match flow line of the connecting pipes. Channel build-up and surface preparation for manholes to be coated shall be in accordance with the section headed "General Coating Preparation" in this Section of the Technical Specifications.
3. Finished benches, channels and inverts shall be smooth and without defects which would allow for accumulation of debris. Finished benches, channels and inverts shall conform to the Contract Documents.

B. Repair/Replacement of Chimney and Frame and Cover Casting

1. Frame and Cover Casting: Frame and cover castings shall be replaced with Contractor or City furnished frame and covers, as directed. Frame and cover replacement varies according to manhole type and shall be performed in accordance with the requirements of the Contract Documents. The existing castings shall be salvaged and delivered to the designated location.
2. Chimney: Manholes that have defective chimneys, frames and/or covers, or covers below grade will be designated for adjustment or replacement of the frame and cover. The Work shall include the following:
   a. Saw cut and remove existing asphaltic or concrete pavement. Existing brick or paver stone pavement shall be carefully removed without cutting and salvaged for reuse. Excavate to at least 6 inches below the bottom of the chimney replacement.
   b. Remove the existing manhole frame and cover casting, salvage and reuse the existing casting where adjustment is required, or deliver the salvaged casting to the designated location where replacement is required. Frames broken during removal or handling by the Contractor shall be replaced at the Contractor's expense.
   c. Remove loose, cracked, broken, deteriorated, deficient or otherwise unsound existing chimney materials as required or directed by the Engineer. Existing Portland cement brick shall be removed and replaced regardless of condition. Where existing frame and cover castings are being replaced with a larger frame and cover casting, the existing chimney/corbel shall be removed and replaced as required to provide a chimney that matches the opening of the larger replacement frame casting. Existing surfaces shall be cleaned and prepared for chimney replacement.
   d. The top of the cone shall be set between two and one-half inches and fourteen and one-half (14 1/2) inches below the bottom of the manhole cover

frame. It is the intent of the specifications to provide a minimum of two and one-half inches to accommodate future grade changes without disturbing the manhole. Where the distance between the bottom of the manhole cover frame and the top of the cone is greater than fourteen and one-half (14 1/2) inches, 12-inch riser units shall be used to bring the top of the cone to within the limits specified.

e. Replace existing chimney with new specified materials. The elevation and horizontal position of the frame shall be adjusted as necessary by installing precast grade adjustment rings or a sufficient number of brick and mortar rows to obtain the desired elevation. The frame and cover elevation and cross slope shall match the existing adjacent pavement. The frame and cover elevation shall be minimum 1 inch above existing grade in unpaved areas, or higher as directed by the Engineer. No materials other than the prepared mortar bed shall be used to obtain final elevation and slope of the frame. The prepared mortar bed shall be minimum 1/2 inch thick.

f. Backfill the excavation and restore surfaces to a condition equal or better than the existing condition prior to construction, in accordance with the requirements of the Contract Documents.

C. Elimination of Infiltration: Infiltration shall be considered as "Minor" or "Severe". (1) "Minor" infiltration consists of water penetration of the manhole structure, appearing as a wet stain or a minute flow (trickle) of water on the interior surface of the manhole. (2) "Severe" infiltration consists of multiple leaks penetrating an area or of single leaks that spray into the interior of the manhole which require drilling through the manhole structure and pumping grout by the use of pressurized injection grouting equipment to stop active leaks. Contractor shall ensure that all visible leaks are eliminated in accordance with the Contract Documents and the coating manufacturer's material recommendations prior to surface preparation and coating application.

1. "Minor" infiltration: If observed within the manhole structure after surface preparation is complete, the area shall be prepared and a product specifically formulated for infiltration control and recommended by the specified manhole coating manufacturer(s) shall be used to stop minor infiltration flows in accordance with the product manufacturer's guidelines.
2. "Severe" infiltration: Requires manhole drilling and pressure grouting. The products used for pressure grouting shall be installed in accordance with the manufacturer's guidelines. Substitute materials shall meet manhole coating manufacturer's recommendations for the particular manhole coating system specified.
    a. Manhole grouting shall only be performed where approved and after associated Work such as CIPP lining.
    b. Chemical grouting shall be performed beginning at the bottom of the manhole and continue up as required to seal all points of severe infiltration.
    c. Grouting, once commenced, shall be completed without stoppage. In case of equipment breakdown, wash out grouting system sufficiently to ensure fresh grout and adequate bond and penetration will occur upon restart. Maintain grout pressure until grout has set.
    d. Grout travel shall be verified by migration of grout to defects or adjacent injection holes.
    e. Injection holes shall be cleaned and patched with waterproof quick setting

mortar as recommended by grout manufacturer.

D. General Coating Preparation

1. Surfaces to be coated shall be cleaned and prepared per the coating manufacturer's recommendations or per International Concrete Repair Institute (ICRI) Guideline Number 03732, whichever is more rigorous. Before applying coating, all contaminants including wastewater, oil, grease, dirt, rust, loose mill scale, waxes, efflorescence, sealers, salts, old coatings, and other foreign substances shall be removed. Oil and grease shall be removed before mechanical cleaning (hydro-blasting) is started. Where mechanical cleaning is accomplished by abrasive blast cleaning, the abrasive used shall be washed, graded and free of contaminates which might interfere with the adhesion of the coating. Steam cleaning, detergent, industrial degreasers, and/or hot water shall be used to clean wall surfaces unless this is contrary to the recommendations of the specific coating system manufacturer. Acid solutions shall not be used.
2. As necessary, wastewater flow shall be stopped, bypassed or diverted for the preparation and application of the coating product{s).
3. Contractor shall prepare, clean, and seal all manhole wall penetrations in accordance with coating manufacturer's recommendations and as approved by the Engineer. Bench, channel, invert, chimney, and frame and cover casting repairs and/or replacements shall be completed before coatings are applied.
4. During surface preparation and coatings application, all nearby equipment, vehicles, structures, etc. shall be protected from blasting grit, dust and over sprayed, dropped or spilled materials. Surfaces adjacent to a proposed leading edge of coating application shall be taped-off or otherwise protected.
5. Clean cloths and clean fluids shall be used in solvent cleaning.
6. Contractor shall inspect all surfaces specified to receive a protective coating prior to surface preparation. Contractor shall notify Engineer of any noticeable disparity in the surfaces which may interfere with the proper preparation or application of the repair mortar and coating. Surface profile created by mechanical cleaning shall be per the coating manufacturer's recommendations.
7. Damaged surfaces shall be observed by the City Inspector before repairs are made. Where concrete or brick deterioration in a manhole structure is severe, structural integrity may need to be restored prior to application of coating, at Engineer's approval.
8. All active infiltration must be eliminated prior to proposed repair with materials as recommended by the coating manufacturer.
9. Plug or place covers over all pipe openings to prevent extraneous material from entering the wastewater system.

E. Surface Preparation of Concrete and Masonry Surfaces

1. Concrete: prepare per SSPC SP13/NACE 6 "Surface Preparation for Concrete," and the coating manufacturer's recommendations. All leaks evidenced by indications of infiltration, shall be plugged with materials as recommended by coating manufacturer. Surface profile created by abrasive blasted surfaces shall be per the manufacturer's recommendation for the coating system.
2. Brick Manhole: prepare per the coating manufacturer's recommendations. Contractor shall remove all oil, grease, chemicals and paints or protective coatings

by chemical cleaning prior to hydro-blasting or abrasive blasting. All foreign particles and attacked or unsound mortar shall be removed from the joints. All leaks evidenced by indications of infiltration, shall be plugged with materials as recommended by coating manufacturer. Loose brickwork and voids in the mortar joints shall be re-grouted with repair materials to provide a void free smooth surface for coating application.

3. Loose or protruding brick, mortar and concrete shall be removed by using a mason's hammer and chisel. The surface to be repaired must be clean and free of any loose materials.
4. Repair products shall be used to fill bugholes, holes, honeycombs, for patching of deep craters, voids or spalled areas of concrete, and/or smoothing transitions between components prior to coating installation. Products used must be compatible with the specified coating system(s) and used/applied in accordance with the repair product manufacturer's recommendations. Materials used shall be recommended by the coating system manufacturer.
5. Resurfacing/repair products shall be mixed, applied, allowed to cure, and treated per their manufacturer's recommendations, before they are coated. The Contractor shall ensure that resurfacing/repair and/or patching materials are fully cured before final surface preparation or coating application. The Contractor shall follow manufacturer's cure schedule before over coating.
6. Surfaces which are to be coated shall be allowed to dry to the moisture content recommended by the coating manufacturer.

F. Coating Interface with Adjoining Construction Materials

1. Coating product(s) shall interface with adjoining construction materials throughout the manhole structure to effectively seal and protect concrete or masonry substrates from infiltration and attack by corrosive elements. Procedures and materials necessary to affect this interface shall be as recommended by the coating product(s) manufacturer and approved by the Engineer. Termination points of the polymer coating product(s) shall have a minimum three (3) inch interface overlap with each pipe penetration. Termination points of the cementitious coating product(s) shall have flush interface abutting each pipe penetration. Wastewater flow shall be stopped, bypassed or diverted for the preparation and application of the coating product(s) to the invert and interface with pipe materials.
2. CIPP Liners: Polymer manhole coatings shall be chemically compatible with and have the ability to bond with the external or internal (with required surface preparation) surface of CIPP liners. Where manholes are coated in conjunction with CIPP lining activities by others, coating shall take place after pipe lining and utilize the existing wastewater Bypass Pumping setup where possible. Resurfacing/repair products shall be selected to minimize curing time. Manhole surface preparation and repair materials prior to coating shall be placed within the invert, channel, and benches at proper depth to allow for proper coating thickness, interface matching with CIPP profile, and minimum three (3) inch overlap of polymer coatings with CIPP terminal edges (internally or externally) in the invert, channel, benches, and remaining areas. The coating shall be monolithic with piping and manhole components. The CIPP surface to be interfaced with and overlapped with polymer coatings shall be clean and remain protected prior to coating. Surface preparation of internal CIPP surfaces shall require wire brushing or other approved means prior to coating to ensure bonding.

G. Final Cleaning: The Contractor shall ensure that all surfaces to be coated are free of dust, moisture, and condensation. Nearby surfaces shall be cleaned to prevent contamination of substrate or freshly applied coatings.

H. Internal Chimney Sealant Application
1. All loose and protruding mortar and brick that would interfere with the seal's performance shall be removed and the manhole frame casting, chimney and cone/corbel cleaned by wire brushing. Prepare the surface as required by the manufacturer.
2. Active infiltration shall be corrected in accordance with the requirements of the section headed "Elimination of Infiltration" in this Section of the Technical Specifications prior to installing the internal chimney sealant. Resurfacing/repair products shall be completely cured in accordance with the manufacturer's requirements prior to installing the internal chimney sealant. The substrate surface must be free of sand, loose debris, dust, dirt, oil, grease or chemical contamination. A blower may be required to completely dry the substrate surface as recommended by the manufacturer.
3. Ensure the frame casting and structure is clean and dry prior to applying the adhesive primer. Brush the adhesive primer onto the casting and structure surfaces where the sealant is intended to adhere, in accordance with the requirements of the manufacturer.
4. The chimney sealant shall be evenly brush applied to the required thickness after the adhesive primer has dried, in accordance with the requirements of the manufacturer.
5. The chimney sealant shall be applied and extend vertically from 1-inch above the frame seal to 2-inches below the chimney and cone/corbel joint. The chimney sealant shall be applied and extend vertically from 1-inch above the frame seal to 12-inches below the frame seal for brick manholes where the frame is installed directly on the cone/corbel.

I. Manhole Cover Insert Installation
1. The Contractor shall accurately measure the existing frame and cover casting prior to ordering the manhole cover insert.
2. The manhole frame casting seat shall be free of all dirt, debris, rust and scale prior to the installation of the manhole cover insert. The insert shall be fully seated around the frame casting seat to ensure against water seepage between the insert and frame casting, and as recommended by the manufacturer.

37.11 COATING MATERIAL APPLICATION

A. Workmanship: Coating shall be conducted in accordance with the requirements of SSPC, Good Painting Practice, Volume 1.
1. Coated surfaces shall be free from significant runs, drips, ridges, waves, laps and brush marks, etc. Coats shall be applied so as to produce an even film of uniform thickness.
2. Coating equipment shall be designed for application of the materials specified.
   a. Compressors shall have traps and filters to remove water and oils.
   b. Spray equipment shall be equipped with mechanical agitators, pressure gages, and pressure regulators, and spray nozzles of the proper sizes and functioning in a manner suitable to perform the work.
   c. The spray equipment shall be specifically designed to accurately ratio and apply the specified protective coating materials and shall be regularly maintained and in proper working order. Spray application equipment must be approved by the coating manufacturer and shall be used to apply each coat of the protective coating.
3. Each coat shall be applied evenly and sharply cut to line.

B. Coating Properties, Mixing, and Thinning

1. Coating shall provide a monolithic film with coverage of all specified surfaces and interfacing joints. Undercoats shall be sanded as required to provide a surface suitable for the proper application and adhesion of subsequent coats. Coating shall be thoroughly stirred, strained, and kept at a uniform consistency during application.
2. Coatings shall be mixed in accordance with the manufacturer's instructions.
3. Clean, potable water shall be used for mixing and accurately metering to the prescribed amount for each batch of the lining system

C. Method of Coating Application

1. Observe OSHA Safety Guidelines when entering Confined Space working areas
2. Where two or more coats are required, all coats shall be WFT tested.
3. Coating shall not be applied to a surface until it has been prepared as specified and approved for coating by the manufacturer.
4. Action shall be taken to prevent rebound material from entering active sewer lines

D. Film Thickness and Continuity

1. Coating system thickness is the total thickness of primer and finish coats. Coatings shall be applied to the thickness specified.
2. Overspray, pinholes and other surface defects shall be repaired.

37.12 COATING SYSTEM SPECIFICATION SHEETS

Coating Systems specified for use appear on the following pages.

Product A

Manufacturer:	Kerneos Inc., 1316 Priority Lane, Chesapeake, VA-1-877-KERNEOS, 757-284-3200 or FAX 757-284-3300.
Product Name:	SewperCoat PG
Qualifications:	Applicator shall be trained and certified by the manufacturer as qualified to apply the specified coating. Applicator qualifications are addressed under item 12 of the Proposal Questionnaire. Provide references and documentation of certification and experience with submittals.
Material Classification:	Pre-packaged 100% calcium aluminate fiber reinforced cementitious monolithic coating composed of pure fused calcium aluminate cement and manufactured calcium aluminate aggregate (no other aggregate material permitted), and is resistant to biosulfuric acid attack. Chemical composition of the calcium aluminate cement and aggregate portion: Al_2O_3= 39 - 44%, CaO = 34 - 38%, $FeO+Fe_2O_3$ = 9 - 15%, SiO_2=6 - 8%.
Surfaces:	Field applied to existing manholes. Coat all of interior of existing concrete, brick, and block manholes, including channels, and interfacing pipe joints.
Color:	Gray
Compressive Strength:	>7,000 psi @ 28 Days per ASTM C1 09
Tensile Strength:	>700 psi @ 28 Days per ASTM C496
Flexural Strength:	> 1,300 psi @ 28 Days per ASTM C348
Shrinkage @ 90% RH:	<0.07% @ 28 Days per ASTM C596
Bond:	>2,500 psi @ 28 Days per ASTM C882

Freeze-Thaw:	No visible damage after 300 cycles per ASTM C666
Density:	Per manufacturer
Service Condition:	Immersed, non-immersed, domestic wastewater corrosive environment.
Surface Preparation:	Per the International Concrete Repair Institute (ICRI) Guideline No. 03732 and the section headed "Preparation" in this Section of the Technical Specifications. Inject or hand pack grout to seal holes, leaks and seeping. Prepared surface shall be thoroughly moistened with water prior to the application. Do not apply to surfaces with running water.
Repair Materials:	Patching grout, infiltration control grout, and any other repair materials shall comply with the recommendations of the manufacturer. No holes or honeycomb surfaces should remain after the application of the repair mortar. Materials shall be fully cured before coating is applied.
Environmental Controls:	Minimum air temperature 40 degrees F and do not expose to rain or snow. Maximum mix temperature 90 degrees F at time of application. Provide ventilation as recommended by manufacturer. Provide wastewater bypass as necessary
Application:	Field application by "wet-shotcrete" method typically with a low-pressure progressive cavity (rotor/stator) type pump that is clean and free of any Portland cement residue. Only unopened manufacturer pre-packaged material permitted for use and mixed with clean potable water per manufacturer's recommendation. Applied by trained technician who is experienced in the application of spray applied cementitious coatings and has been certified by the manufacturer. Coating shall be applied within 24 hours of completion of surface preparation. The finished bench surfaces shall be smooth, free of ridges and will be sloped in the direction of flow. Special care shall be used to ensure a smooth transition between the new manhole invert and intersecting pipe inverts such that flow will not be impaired. Manufacturer to certify equipment proposed for use by Contractor.
Curing:	Per manufacturer's recommendations and minimum 18 hours moist curing. Curing compound, if required, shall meet the requirements of ASTM C309 and be approved by the lining material manufacturer and the Engineer prior to use. Minimum 6 hours curing prior to contact or immersion with flowing wastewater
Thickness:	Minimum of 1/2 inch DFT
Tolerances:	Minus 0 inches.
Cleanup:	Water
Inspection Check Points:	See the subsection headed "Quality Assurance/Quality Control" in this Section of the Technical Specifications. Check Points 1 through 10.

Product B

Manufacturer:	The Strong Company, Inc., 4505 Emmett Sanders Road, Pine Bluff, AR -1-800-982-8009 or FAX 870-850-6933.
Product Name:	High Performance Mix
Qualifications:	Applicator shall be trained and certified by the manufacturer as qualified to apply the specified coating. Applicator qualifications are addressed under item 12 of the Proposal Questionnaire. Provide references and documentation of certification and experience with submittals.
Material Classification:	Pre-packaged 100% calcium aluminate fiber reinforced cementitious monolithic coating composed of pure fused calcium aluminate cement and

	manufactured calcium aluminate aggregate (no other aggregate material permitted) and is resistant to biosulfuric acid attack. Chemical composition of the calcium aluminate cement and aggregate portion: Al_20 3::: 39 44%, CaO ::: 34 - 38%, $FeO+Fe_20_3$ ::: 9 - 15%, $Si0_2$::: 6 - 8%.
Surfaces:	Field applied to existing manholes. Coat all of interior of existing concrete, brick, and block manholes, including channels, and interfacing pipe joints.
Color:	Gray
Compressive Strength:	>9,000 psi @ 28 Days per ASTM C109
Tensile Strength:	>800 psi @ 28 Days per ASTM C496
Flexural Strength:	>1,300 psi @ 28 Days per ASTM C293
Shrinkage @ 90% RH:	0% @ 28 Days per ASTM C596
Bond:	>3,000 psi @ 28 Days per ASTM C882
Freeze-Thaw:	No visible damage after 300 cycles per ASTM C666
Density:	Per manufacturer.
Service Condition:	Immersed, non-immersed, domestic wastewater corrosive environment.
Surface Preparation:	Per the International Concrete Repair Institute (ICRI) Guideline No. 03732 and the section headed "Preparation" in this Section of the Technical Specifications. Inject or hand pack grout to seal holes, leaks and seeping. Prepared surface shall be thoroughly moistened with water prior to the application. Do not apply to surfaces with running water.
Repair Materials:	Patching grout, infiltration control grout, and any other repair materials shall comply with the recommendations of the manufacturer. No holes or honeycomb surfaces should remain after the application of the repair mortar. Materials shall be fully cured before coating is applied.
Environmental Controls:	Minimum air temperature 40 degrees F and do not expose to rain or snow. Maximum mix temperature 90 degrees F at time of application. Provide ventilation as recommended by manufacturer. Provide wastewater bypass as necessary.
Application:	Field application by "wet-shotcrete" method typically with a low-pressure progressive cavity (rotor/stator) type pump that is clean and free of any Portland cement residue. Only unopened manufacturer pre-packaged material permitted for use and mixed with clean potable water per manufacturer's recommendation. Applied by trained technician who is experienced in the application of spray applied cementitious coatings and has been certified by the manufacturer. Coating shall be applied within 24 hours of completion of surface preparation. The finished bench surfaces shall be smooth, free of ridges and will be sloped in the direction of flow. Special care shall be used to ensure a smooth transition between the new manhole invert and intersecting pipe inverts such that flow will not be impaired. Manufacturer to certify equipment proposed for use by Contractor.
Curing:	Per manufacturer's recommendations and minimum 18 hours moist curing. Curing compound, if required, shall meet the requirements of ASTM C309 and be approved by the lining material manufacturer and the Engineer prior to use. Minimum 6 hours curing prior to contact or immersion with flowing wastewater.
Thickness:	Minimum of 1/2 inch DFT
Tolerances:	Minus 0 inches.
Cleanup:	Water
Inspection Check Points:	See the subsection headed "Quality Assurance/Quality Control" in this Section of the Technical Specifications. Check Points 1 through 10.

Product C

Manufacturer:	Protective Liner Systems, Inc. 7625 Mall Parkway, Lithonia, GA 30038. P.O. Box 921, Lithonia, GA 30058. (770) 482-5201, (770) 861-9965.
Product Name:	PLS-650 PerpetuWall Liner System. (PLS-613, PLS-614, PLS-700 and PLS-618)
Qualifications:	Applicator shall be trained and certified by the manufacturer as qualified to apply the specified coating. Applicator qualifications are addressed under item 12 of the Proposal Questionnaire. Provide references and documentation of certification and experience with submittals.
Material Classification:	Fiberglass-reinforced modified epoxy resin monolithic coating system. 100% solids bisphenol A epoxy resin with polyamide curing agent. Materials per ASTM D638-Test Method for Tensile Properties of Plastics, and ASTM D790-Test Methods for Flexural Properties of Unreinforced and Reinforced Plastics and Electrical Insulating Materials.
Surfaces:	Field applied to existing manholes. Coat all of interior of existing concrete, brick, and block manholes, including channels and interfacing pipe joints.
Color:	Light gray
Compressive Strength:	16,800 psi per ASTM D695
Tensile Strength:	12,400 psi per ASTM D638
Flexural Strength:	13,900 psi per ASTM D790
Shrinkage @ 90% RH:	500,000 psi per ASTM D790
Bond:	Shall exceed tensile strength of substrate
Low-Temp. Flexibility:	Per manufacturer, per ASTM D1790
Density:	Per manufacturer.
Service Condition:	Immersed, non-potable, non-immersed, domestic wastewater, corrosive environment, interior and exterior water pressure, traffic areas.
Surface Preparation:	Per the section headed "Preparation" in this Section of the Technical Specifications. In addition, galvanized steel and aluminum may require etching. Inject or hand pack grout to seal holes, leaks and seeping. Can be applied to wet or dry surface. do not apply to surfaces with active infiltration or running water.
Repair Materials:	Patching grout, infiltration control grout, and any other repair materials shall comply with the recommendations of the manufacturer. No holes or honeycomb surfaces should remain after the application of the repair mortar. Materials shall be fully cured before coating is applied.
Environmental Controls:	Provide heaters, dehumidification, and ventilation as recommended by manufacturer and as needed. Provide wastewater bypass as necessary.
Design:	Shall be designed to withstand the hydraulic load generated by the groundwater table. The invert and bench coating thickness shall be the same as that required at the bottom of the manhole wall as determined by the manufacturer's standard engineering calculations for groundwater pressure. Coating thickness design to be based on the groundwater table being one foot below the ground surface. Testing required for design values of the flexural modulus of the coating will be verified by a third-party independent testing lab paid for by the Contractor. The test results and design information for each individual structure shall be submitted to the Engineer for review.
Application:	Field application of PLS-613 or PLS-614 depending on temperature and conditions of application by trained technician who has been certified by the

	manufacturer. PLS-613 can be hand applied by brush, roller or trowel on dry or wet surface. PLS-614 is applied by trowel on dry or wet surface. Coating shall be applied within 24 hours of completion of surface preparation. Coating steps: (1) Begin with an approximate WFT of 100 mils (2) fiberglass fabric cut and pressed into epoxy mastic to full wet-out (3) adjacent applications of fabric edges to be overlapped or butt-jointed (4) fabric top coated with epoxy PLS-613 or PLS-614. Additional coats can be applied in 2-3 hours, but no later than 24 hrs. The finished bench surfaces shall be smooth, free of ridges and will be sloped in the direction of flow. Special care shall be used to ensure a smooth transition between the new manhole invert and intersecting pipe inverts such that flow will not be impaired. Manufacturer to certify equipment proposed for use by Contractor.
Curing:	Coating will cure in 3-4 hours at 70 degrees F to approximately 75% of their strength, after which time may be subjected to active flow. Maximum physical properties achieved in 4-5 days. Higher temperatures will reduce these requirements.
Thickness:	Per manufacturer's design. 125 mils minimum thickness.
Tolerances:	Plus 20 mils or minus 10 mils.
Cleanup:	Clean equipment with Xylene or lacquer thinner. Clean hands with denatured alcohol or Go-Jo type hand cleaner. Dispose of solvent and debris as required by code.
Inspection Check Points:	See the subsection headed "Quality Assurance/Quality Control" in this Section of the Technical Specifications. Check Points 1 through 10.

Product D

Manufacturer:	International Paint LLC; 6001 Antoine Drive, Houston TX 77091 (713) 682-1711
Product Name:	Enviroline 222
Qualifications:	Contractor/applicator trained in the application of high-performance industrial lining systems
Material Classification:	Epoxy novolac
Surfaces:	Carbon steel, stainless steel, concrete; substrate preparation and application in accordance with Manufacturer Data Sheet and Application Guidelines
Color:	Green, Gray
Compressive Strength:	ASTM D695 @ 40 mils TDFT: 72MPa
Tensile Strength:	ASTM D638 @ 40 mils TDFT: 38MPa
Flexural Strength:	ASTM D790 @ 40 mils TDFT: 66MPa
Shrinkage @ 90% RH:	N/A
Bond:	1700 psi on steel, exceeds tensile strength of concrete
Low-Temp. Flexibility:	N/A
Density:	11.4 lbs/gal (1.62 g/cm) / ASTM D1475
Service Condition:	Immersion or secondary containment of wastewater infrastructure, non-potable water and chemicals
Surface Preparation:	Substrate preparation in accordance with Manufacturer Data Sheet and Application Guidelines
Repair Materials:	Intercrete 4801, 4802 & 4820, for topcoat epoxy repair: Enviroline 222 and depending on service, Enviroline 124
Environmental Controls:	Substrate preparation and application in accordance with Manufacturer

	Data Sheet and Application Guidelines
Application:	Application in accordance with Manufacturer Data Sheet and Application Guidelines
Curing:	8 hours at 77° F.
Thickness:	20-100 mils TDFT
Tolerances:	SSPC-PA 2 Level 3
Cleanup:	Enviroline 71C
Abrasion Resistance	ASTM 4060 average of 41.4 mg weight loss per 1000 cycles, CS17 wheel with 1kg loading
Severe Wastewater Analysis Test (ASTM G210)	ASTM G210 Performed well in Severe Wastewater Analysis Test
Inspection Check Points:	See the subsection headed "Quality Assurance/Quality Control" in this Section of the Technical Specifications. Check Points 1 through 10.

Product E

Manufacturer:	Tnemec Company, Inc. 123 West 23rd Ave, North Kansas City, MO, 64116 Phone: 1-816-483-3400 Represented locally by Florida Protective Coatings Services Office Phone: (407) 322 – 1243 Local Representative (Chad Holmes) Phone: (727) 201 – 6706
Product Name:	Tnemec Perma-Shield Series 435 Perma-Glaze
Qualifications:	Applicator must have a minimum NACE level 1 on staff and have a minimum 5 completed projects of similar size & complexity to this work with the use of Tnemec coatings. Applicator must meet all other requirements of the municipality.
Material Classification:	Micro-Fiber Reinforced, Modified Polyamine Epoxy
Surfaces:	Field applied to existing manholes. Coat all of interior of existing concrete, brick, and block manholes, including channels and interfacing pipe joints.
Color:	Gray or Beige
Compressive Strength:	No Less than 9,427 (65.0 MPa) compressive strength, average of five tests.
Tensile Strength:	No less than 3,231 psi (22.28 MPa) tensile strength.
Tensile Modulus of Elasticity (ASTM D2370)	No less than 241,368 psi (1664.17 MPa) tensile modulus of elasticity.
Service Condition:	**Non-potable, anaerobic wastewater environments with mild H_2S concentrations (Immersion & Headspace).**
Surface Preparation:	Abrasive blast or mechanically abrade in accordance with SSPC-SP13/NACE No. 6 to remove all existing coatings and provide a minimum ICRI CSP 5 surface profile. Surface must be clean, dry, and contaminant-free prior to coating.
Repair Materials:	Tnemec Series 218 at a nominal 1/8” and as needed to bring surfaces to level. Series 217 may also be used for deeper repairs (See Application Guide for details).
Environmental Controls:	Substrate temperature should be at least 5°F above the dew point. Refer to manufacturer’s latest written recommendations for additional guidance.
Application:	Refer to product data sheet and Series 435 Application Guide for latest storage, equipment, and application recommendations. Refer to Tnemec’s Perma-Shield Details Guide for construction details

Curing:	Maximum recoat window is 7 days. Cure for 2 days (at 75°F) prior to placing into service.
Thickness:	30.0 – 40.0 mils in one or two coats.
Cleanup:	Tnemec's #4 thinner or MEK.
Abrasion Resistance	No more than 72 mg loss after 1,000 cycles, average of three tests
Severe Wastewater Analysis Test (ASTM G210)	Initial impedance of 12.46 log-Z at 0.01 Hz (ohms cm²). No blistering, cracking, checking or delamination. No less than 84.3% retention and no more than 1.95 ohms cm² reduction in electrochemical impedance after 28 days exposure. No less than 93% loss of tensile adhesion after 28 days in S.W.A.T. average of three tests.
Inspection Check Points:	See the subsection headed "Quality Assurance/Quality Control" in this Section of the Technical Specifications. Check Points 1 through 10.

Product F

Manufacturer:	Tnemec Company, Inc. 123 West 23rd Ave, North Kansas City, MO, 64116 Phone: 1-816-483-3400 Represented locally by Florida Protective Coatings Services Office Phone: (407) 322 – 1243 Local Representative (Chad Holmes) Phone: (727) 201 – 6706
Product Name:	Body Coat (Option 1): Tnemec Series 434 Perma-Shield H_2S. Body Coat (Option 2): Tnemec Series 436 Perma-Shield FR. Glaze Coat: Tnemec Series 435 Perma-Glaze
Qualifications:	Applicator must have a minimum NACE level 1 on staff and have a minimum 5 completed projects of similar size & complexity to this work with the use of Tnemec coatings. Applicator must meet all other requirements of the municipality.
Material Classification:	434: Modified Aliphatic Amine Epoxy Mortar 436: Fiber-Reinforced Modified Polyamine Epoxy 435: Micro-Fiber Reinforced, Modified Polyamine Epoxy
Surfaces:	Field applied to existing manholes. Coat all of interior of existing concrete, brick, and block manholes, including channels and interfacing pipe joints.
Color:	Gray or Beige
Compressive Strength:	No Less than 8,866 psi (6.13 MPa) compressive strength, average of five tests.
Tensile Strength:	No less than 2,940 psi (20.3 MPa) tensile strength.
Tensile Modulus of Elasticity (ASTM D2370)	No less than 6,753 psi (46.6 MPa) tensile modulus of elasticity.
Service Condition:	**Non-potable, anaerobic wastewater environments with moderate to severe H_2S concentrations (Immersion & Headspace).**
Surface Preparation:	Abrasive blast or mechanically abrade in accordance with SSPC-SP13/NACE No. 6 to remove all existing coatings and provide a minimum ICRI CSP 5 surface profile. Surface must be clean, dry, and contaminant-free prior to coating. Cementitious surfaces with a pH less than 9 shall not be considered "contaminant-free".
Repair Materials:	Tnemec Series 218 at a nominal 1/8" and as needed to bring surfaces to level. Series 217 may also be used for deeper repairs (See Application Guide for details).
Environmental Controls:	Substrate temperature should be at least 5°F above the dew point. Refer to

	manufacturer's latest written recommendations for additional guidance.
Application:	Refer to Tnemec Product Data Sheets and Application Guides for latest storage, equipment, and application recommendations. Refer to Tnemec's Perma-Shield Details Guide for construction details.
Curing:	Maximum recoat window is 7 days. Cure for 2 days (at 75°F) prior to placing into service.
Thickness:	Body Coat (Option 1) Series 434: Nominal 1/8", or 125.0 mils thickness. Body Coat (Option 2) Series 436: Nominal 1/8", or 125.0 mils thickness. Glaze Coat Series 435: 15.0 – 20.0 mils.
Cleanup:	Tnemec's #4 thinner or MEK.
Abrasion Resistance	No more than 72 mg loss after 1,000 cycles, average of three tests.
Severe Wastewater Analysis Test (ASTM G210)	Series 434: Initial impedance of 10.6 log-Z at 0.01 Hz (ohms cm²). No blistering, cracking, checking or delamination. No less than 86.7% retention or not more than 1.4 ohms cm² reduction in log-Z electrochemical impedance at 0.01 Hz after 28 days exposure. No loss of adhesion after 28 days in S.W.A.T., average of three tests. Series 436: Initial impedance of 10.2 log-Z at 0.01 Hz (ohms cm²). No blistering, cracking, checking or delamination. No less than 83.7% retention or not more than 1.6 ohms cm² reduction in log-Z electrochemical impedance at 0.01 Hz after 28 days exposure. Series 435: Initial impedance of 12.46 log-Z at 0.01 Hz (ohms cm²). No blistering, cracking, checking or delamination. No less than 84.3% retention and no more than 1.95 ohms cm² reduction in electrochemical impedance after 28 days exposure. No less than 93% loss of tensile adhesion after 28 days in S.W.A.T. average of three tests.
Inspection Check Points:	See the subsection headed "Quality Assurance/Quality Control" in this Section of the Technical Specifications. Check Points 1 through 10.

Product G

Manufacturer:	GML Coatings, LLC. 10315 Technology Terrace, Bradenton FL 34211 (941) 755-2176, GMLCOATINGS.COM
Product Name:	Green Monster Liner Structural
Qualifications:	Coating shall be manufactured by GML Coatings, LLC., or pre-approved equal. The completed system shall provide a waterproof, corrosion resistant liner to prevent any deterioration of concrete surfaces from hydrogen sulfide and other corrosive gases/acids produced by wastewater and to prevent infiltration. **To ensure total unit responsibility, all materials and installation thereof shall be approved and furnished by, and coordinated with, GML Coatings LLC.**
Material Classification:	Green Monster Liner Structural is a two component, 100% solids, zero VOC, polyurethane hybrid, structural coating.
Surfaces:	Existing and new concrete or brick manholes, lift stations, WWTP infrastructures, metals, and fiberglass.
Color:	Light Green
Tensile Strength:	4,500 psi per ASTM D412

Flexural Modulus	>80,000 per ASTM D729
Bond (without primer):	>480 psi per ASTM D 4541 (Substrate failure) concrete >3000 psi per ASTM D 4541 (Substrate failure) carbon steel
Service Condition:	Manholes, Wetwells, WWTP
Surface Preparation:	For optimum performance, concrete should be hydro blasted and/or sandblasted. Concrete that has been adhesion tested and approved to be compatible with **Green Monster Liner Structural** should have cured completely and show a pH of 11 or lower and heated with indirect heat before priming and coating.
Repair Materials:	Remove the portion that is damaged, clean concrete behind damaged liner, prepare surrounding liner for application, apply new liner.
Environmental Controls:	Bypass wastewater as needed, provide heaters, and ventilation
Application:	Surface temperature shall be decreasing while applying liner. Surface moisture content shall be 2% or less, (RH humidity chart will allow higher reading). Prior to application of material, make sure that there is no loose dust, dirt, grease, petrochemicals, or any material that will interfere with the bonding process. For maximum adhesion, Green Monster Liner Structural should always be applied over Green Monster Primer. After following the proper steps according to the GML System Specs, Green Monster Liner Structural should be applied in a cross directional method. It is very important to maintain constant pressure while spraying. A radical variation of these pressures can result in a loss of physical properties, poor color retention, bubbling and de-bonding of the material from the surface applied to. Hose temperature should maintain a minimum temperature of 155°F.
Thickness:	It is recommended to apply Green Monster Liner Structural at a minimum thickness of 125 mils to an unlimited build thickness. Standard application thickness for manholes and lift stations is 250 mils.
Cleanup:	Cured product may be disposed of without restriction. The uncured isocyanate and resin portions should be disposed of according to local, state, and federal laws.
Inspection Check Points:	See the subsection headed "Quality Assurance/Quality Control" in this Section of the Technical Specifications. Check Points 1 through 10.

Product H

Manufacturer:	Raven Lining Systems 686 S. Adams St. Kansas City, KS. 66105 (913) 321-9000
Product Name:	Raven 405
Qualifications:	Applicator shall be trained and certified by the manufacturer as qualified to apply the specified coating.
Material Classification:	100% solids, ultra-high build, solvent-free epoxy coating
Surfaces:	Field applied to existing manholes. Coat all of interior of existing concrete, brick, and block manholes, including channels and interfacing pipe joints.
Color:	Light blue
Compressive Strength:	18,000 psi per ASTM D695
Tensile Strength:	>9000 psi per ASTM D638
Flexural Strength:	15,000 psi per ASTM D790

Shrinkage @ 90% RH:	Per manufacturer
Bond:	Shall exceed tensile strength of substrate
Low-Temp. Flexibility:	Per manufacturer, per ASTM D1790
Density:	Per manufacturer.
Service Condition:	Immersed, non-potable, non-immersed, domestic wastewater, corrosive environment, interior and exterior water pressure, traffic areas.
Surface Preparation:	Per TDS
Repair Materials:	Patching grout, infiltration control grout, and any other repair materials shall comply with the recommendations of the manufacture.
Environmental Controls:	Per manufacturer
Design:	Shall be designed to withstand the hydraulic load generated by the groundwater table. All structures shall be coated with 125 mils Raven 405 un structure is more than 60 ft below water table.
Application:	Shall be applied per manufacturer's application guidelines.
Curing:	Flow can continue after 3 to 6 hours depending on environmental conditions.
Thickness:	Per manufacturer's design. 125 mils minimum thickness.
Tolerances:	Plus 20 mils or minus 10 mils.
Cleanup:	Per manufacturer
Inspection Check Points:	See the subsection headed "Quality Assurance/Quality Control" in this Section of the Technical Specifications. Check Points 1 through 10.

END OF SECTION

THIS PAGE INTENTIONALLY LEFT BLANK

CITY OF ST. PETE BEACH					
WASTEWATER SYSTEM REHABILITATION SERVICES					
ITEM	DESCRIPTION	QTY	UNIT	UNIT PRICE	AMOUNT
MANHOLE REHABILITATION					
1	Mobilization	1	EA		$ -
2	Flagmen (Per-Flagmen)	20	HR		$ -
3	Multi Lane, Lane Closures (FDOT Index No. 613)	10	EA/DY		$ -
4	Multi Lane, Intersection (FDOT Index No. 615)	10	EA/DY		$ -
5	Arrow Boards - 5' Minimum Horizontal Size	10	EA/DY		$ -
6	Variable Message Board	10	EA/DY		$ -
7	Concrete Barrier (FDOT Index No. 100)	10	EA/DY		$ -
8	Low Profile Barrier (FDOT Index No. 120)	10	EA/DY		$ -
9	Signs in Work Zones	10	EA/DY		$ -
10	6" Solid line Thermo Plastic - Permanent	200	LF		$ -
11	24" Stop Bar, Solid, Thermo Plastic, Perm.	200	LF		$ -
12	6" Skip line (6'-10' Skip) Thermo Plastic-Perm.	200	LF		$ -
13	Barricades Type III, with Warning Lights	1000	EA/DY		$ -
14	Barricades Type I or II, with Warning Lights	1000	EA/DY		$ -
15	Repair Manhole Bench and Channel	10	EA		$ -
16	Repair Chimney, Adjust/Replace MH Casting- Unpaved	10	EA		$ -
17	Repair Chimney, Adjust/Replace MH Casting- Asphalt Pavement	100	EA		$ -
18	Rebuild Corbel/Chimney for Type B Manhole Casting	10	EA		$ -
19	Furnish Manhole Casting - Type B	10	EA		$ -
20	Furnish Manhole Casting - Type E	30	EA		$ -
21	Severe Manhole Infiltration Elimination	10	EA		$ -
22	Chemical Sealing - Grout	50	GAL		$ -
23	Internal Chimney Sealant - Type B Manhole Casing	5	EA		$ -
24	Internal Chimney Sealant - Type E Manhole Casing	10	EA		$ -
25	Additional Access Cost for Manhole Coating	10	EA		$ -
26	Bypass Pumping Setup - 6-10" diameter	5	EA		$ -
27	Bypass Pumping Setup - 12" -14" diameter	20	EA		$ -
28	Bypass Pumping Setup - 15" to 21" diameter	10	EA		$ -
29	Bypass Pumping Setup - 24" diameter	5	EA		$ -
30	Bypass Pumping Operation - 6"-10" diameter	10	DAY		$ -
31	Bypass Pumping Operation - 12"-14" diameter	50	DAY		$ -
32	Bypass Pumping Operation - 15" to 21" diameter	25	DAY		$ -
33	Bypass Pumping Operation - 24" diameter	15	DAY		$ -
34	Pure Calcium Aluminate Cementitious MH Coating - 48" diameter, Initial	50	EA		$ -
35	Pure Calcium Aluminate Cementitious MH Coating - 60" diameter, Initial	10	EA		$ -
36	Pure Calcium Aluminate Cementitious MH Coating - 72" diameter, Initial	5	EA		$ -
37	Pure Calcium Aluminate Cementitious MH Coating - 48" diameter, Additional	250	VF		$ -
38	Pure Calcium Aluminate Cementitious MH Coating - 60" diameter, Additional	50	VF		$ -
39	Pure Calcium Aluminate Cementitious MH Coating - 72" diameter, Additional	25	VF		$ -
40	Reinforced Polymer MH Coating - 48" diameter, Initial	5	EA		$ -
41	Reinforced Polymer MH Coating - 60" diameter, Initial	5	EA		$ -
42	Reinforced Polymer MH Coating - 72" diameter, Initial	5	EA		$ -
43	Reinforced Polymer MH Coating - 48" diameter, Additional	25	VF		$ -
44	Reinforced Polymer MH Coating - 60" diameter, Additional	25	VF		$ -
45	Reinforced Polymer MH Coating - 72" diameter, Additional	25	VF		$ -
46	Concrete Curb Replacement - Type D	100	LF		$ -
47	Concrete Curb Replacement - Type F	100	LF		$ -
48	Concrete Curb Replacement - Miami Curb	100	LF		$ -
49	Concrete Sidewalk Replacement - 4" Thick	50	SY		$ -
50	Concrete Sidewalk Replacement - 6" Thick	50	SY		$ -
51	Concrete Driveway Replacement - 4" Thick	50	SY		$ -
52	Concrete Driveway Replacement - 6" Thick	50	SY		$ -
53	Inflow Dish	100	EA		$ -
			SUBTOTAL - MANHOLE REHABILITATION		$ -
PIPE LINING					
1	Mobilization	1	EA		$ -
2	Flagmen (Per-Flagmen)	20	HR		$ -
3	Multi Lane, Lane Closures (FDOT Index No. 613)	10	EA/DY		$ -
4	Multi Lane, Intersection (FDOT Index No. 615)	10	EA/DY		$ -

5	Arrow Boards - 5' Minimum Horizontal Size	10	EA/DY		$	-
6	Variable Message Board	10	EA/DY		$	-
7	Concrete Barrier (FDOT Index No. 100)	10	EA/DY		$	-
8	Low Profile Barrier (FDOT Index No. 120)	10	EA/DY		$	-
9	Signs in Work Zones	10	EA/DY		$	-
10	6" Solid line Thermo Plastic - Permanent	200	LF		$	-
11	24" Stop Bar, Solid, Thermo Plastic, Perm.	200	LF		$	-
12	6" Skip line (6'-10' Skip) Thermo Plastic-Perm.	200	LF		$	-
13	Barricades Type III, with Warning Lights	1000	EA/DY		$	-
14	Barricades Type I or II, with Warning Lights	1000	EA/DY		$	-
15	CIPP Main Liner 6" Diameter - 4.5 mm thickness	1100	LF		$	-
16	CIPP Main Liner 8" Diameter - 6.0 mm thickness	72200	LF		$	-
17	CIPP Main Liner 10" Diameter - 6.0 mm thickness	3600	LF		$	-
18	CIPP Main Liner 12" Diameter - 6.0 mm thickness	2400	LF		$	-
19	CIPP Main Liner 15" Diameter - 7.5 mm thickness	1500	LF		$	-
20	CIPP Main Liner 18" Diameter - 9.0 mm thickness	1800	LF		$	-
21	CIPP Main Liner 21" Diameter - 9.0 mm thickness	2900	LF		$	-
22	CIPP Main Liner 24" Diameter - 10.5 mm thickness	3800	LF		$	-
23	CIPP Main Liner 6" Diameter - Thickness Variance + 1.5mm	300	LF		$	-
24	CIPP Main Liner 8" Diameter - Thickness Variance + 1.5mm	5000	LF		$	-
25	CIPP Main Liner 10" Diameter - Thickness Variance + 1.5mm	1000	LF		$	-
26	CIPP Main Liner 12" Diameter - Thickness Variance + 1.5mm	1000	LF		$	-
27	CIPP Main Liner 15" Diameter - Thickness Variance + 1.5mm	300	LF		$	-
28	CIPP Main Liner 18" Diameter - Thickness Variance + 1.5mm	300	LF		$	-
29	CIPP Main Liner 21" Diameter - Thickness Variance + 1.5mm	300	LF		$	-
30	CIPP Main Liner 24" Diameter - Thickness Variance + 1.5mm	300	LF		$	-
31	Bypass Pumping Setup - 6-10" diameter	5	EA		$	-
32	Bypass Pumping Setup - 12" -14" diameter	45	EA		$	-
33	Bypass Pumping Setup - 15" to 21" diameter	20	EA		$	-
34	Bypass Pumping Setup - 24" diameter	5	EA		$	-
35	Bypass Pumping Operation - 6"-10" diameter	10	DAY		$	-
36	Bypass Pumping Operation - 12"-14" diameter	90	DAY		$	-
37	Bypass Pumping Operation - 15" to 21" diameter	40	DAY		$	-
38	Bypass Pumping Operation - 24" diameter	10	DAY		$	-
39	Normal Cleaning - 6" and 8" diameter	73300	LF		$	-
40	Normal Cleaning - 10" and 12" diameter	6000	LF		$	-
41	Normal Cleaning - 15" and 18" diameter	3300	LF		$	-
42	Normal Cleaning - 21" and 24" diameter	6700	LF		$	-
43	Specialty Cleaning - 6" and 8" diameter	1000	LF		$	-
44	Specialty Cleaning - 10" and 12" diameter	100	LF		$	-
45	Specialty Cleaning - 15" and 18" diameter	50	LF		$	-
46	Specialty Cleaning - 21" and 24" diameter	100	LF		$	-
47	Chemical Sealing of Host Pipe - 10" diameter and less	30	EA		$	-
48	Chemical Sealing of Host Pipe - 12" and 15" diameter	10	EA		$	-
49	Chemical Sealing of Host Pipe - 18" to 24" diameter	5	EA		$	-
50	Chemical Sealing - Grout	100	GAL		$	-
51	Removal & Sealing of Protruding Service Connections	25	EA		$	-
52	Additional Access Cost Main Liner	25	EA		$	-
53	Service Reconnection	200	EA		$	-
54	CIPP Liner Testing	5	EA		$	-
55	Lateral Grouting	10	EA		$	-
				SUBTOTAL - PIPE LINING	$	-
POINT REPAIRS						
1	Mobilization for Routine Response	20	EA		$	-
2	Mobilization for Emergency Response	6	EA		$	-
3	Flagmen (Per-Flagmen)	20	HR		$	-
4	Multi Lane, Lane Closures (FDOT Index No. 613)	5	EA/DY		$	-
5	Multi Lane, Intersection (FDOT Index No. 615)	5	EA/DY		$	-
6	Arrow Boards - 5' Minimum Horizontal Size	10	EA/DY		$	-
7	Variable Message Board	10	EA/DY		$	-
8	Concrete Barrier (FDOT Index No. 415)	10	EA/DY		$	-
9	Low Profile Barrier (FDOT Index No. 412)	10	EA/DY		$	-
10	Signs in Work Zones	10	EA/DY		$	-

11	6" Solid line Thermo Plastic - Permanent	200	LF		$	-
12	24" Stop Bar, Solid, Thermo Plastic, Perm.	200	LF		$	-
13	6" Skip line (6'-10' Skip) Thermo Plastic-Perm.	200	LF		$	-
14	Barricades Type III, with Warning Lights	1000	EA/DY		$	-
15	Barricades Type I or II, with Warning Lights	1000	EA/DY		$	-
16	As-Built Survey	5	EA		$	-
17	Excavation, Unsuitable Material	100	CY		$	-
18	Sheeting & Bracing (Left in Place)	500	SF		$	-
19	Sheeting & Bracing, Pipe Trenches (Removed)	2500	SF		$	-
20	Well Point Dewatering Initial - 6'-8' Deep	10	EA		$	-
21	Well Point Dewatering Initial - 8'-10' Deep	10	EA		$	-
22	Well Point Dewatering Initial - 10'-12' Deep	5	EA		$	-
23	Well Point Dewatering Initial - 12'-14' Deep	5	EA		$	-
24	Well Point Dewatering Initial - 14'-16' Deep	3	EA		$	-
25	Well Point Dewatering Initial - > 16' Deep	3	EA		$	-
26	Well Point Dewatering Additional - 6'-8' Deep	200	EA		$	-
27	Well Point Dewatering Additional - 8'-10' Deep	200	EA		$	-
28	Well Point Dewatering Additional - 10'-12' Deep	100	EA		$	-
29	Well Point Dewatering Additional - 12'-14' Deep	100	EA		$	-
30	Well Point Dewatering Additional - 14'-16' Deep	50	EA		$	-
31	Well Point Dewatering Additional - > 16' Deep	50	EA		$	-
32	Jack & Bore 12" x .188" Steel Casing (6" GS)	40	LF		$	-
33	Jack & Bore 16" x .219" Steel Casing (8" GS)	40	LF		$	-
34	Jack & Bore 20" x .250" Steel Casing (10" GS)	40	LF		$	-
35	Jack & Bore 24" x .281" Steel Casing (12" GS)	40	LF		$	-
36	2" Directional Drill HDPE DR 9, IPS OD	200	LF		$	-
37	4" Directional Drill HDPE DR 11, DIPS OD	300	LF		$	-
38	6" Directional Drill HDPE DR 11, DIPS OD	500	LF		$	-
39	8" Directional Drill HDPE DR 11, DIPS OD	500	LF		$	-
40	10" Directional Drill HDPE DR 11, DIPS OD	500	LF		$	-
41	12" Directional Drill HDPE DR 11, DIPS OD	300	LF		$	-
42	6" PVC Pipe, C-900 DR 18 (Gravity Sewer) 0' - 6' Depth	100	LF		$	-
43	6" PVC Pipe, C-900 DR 18 (Gravity Sewer) 6' - 8' Depth	200	LF		$	-
44	6" PVC Pipe, C-900 DR 18 (Gravity Sewer) 8' - 10' Depth	100	LF		$	-
45	6" PVC Pipe, C-900 DR 18 (Gravity Sewer) 10' - 12' Depth	50	LF		$	-
46	6" PVC Pipe, C-900 DR 18 (Gravity Sewer) 12' - 14' Depth	50	LF		$	-
47	6" PVC Pipe, C-900 DR 18 (Gravity Sewer) 14' - 16' Depth	50	LF		$	-
48	6" PVC Pipe, C-900 DR 18 (Gravity Sewer) 16' - 18' Depth	50	LF		$	-
49	8" DI Pipe, CL 350 (Gravity Sewer) 0' - 6' Depth	50	LF		$	-
50	8" DI Pipe, CL 350 (Gravity Sewer) 6' - 8' Depth	100	LF		$	-
51	8" DI Pipe, CL 350 (Gravity Sewer) 8' - 10' Depth	100	LF		$	-
52	8" DI Pipe, CL 350 (Gravity Sewer) 10' - 12' Depth	50	LF		$	-
53	8" DI Pipe, CL 350 (Gravity Sewer) 12' - 14' Depth	50	LF		$	-
54	8" DI Pipe, CL 350 (Gravity Sewer) 14' - 16' Depth	50	LF		$	-
55	8" DI Pipe, CL 350 (Gravity Sewer) 16' - 18' Depth	50	LF		$	-
56	8" PVC Pipe, C-900 DR 18 (Gravity Sewer) 0' - 6' Depth	200	LF		$	-
57	8" PVC Pipe, C-900 DR 18 (Gravity Sewer) 6' - 8' Depth	400	LF		$	-
58	8" PVC Pipe, C-900 DR 18 (Gravity Sewer) 8' - 10' Depth	400	LF		$	-
59	8" PVC Pipe, C-900 DR 18 (Gravity Sewer) 10' - 12' Depth	400	LF		$	-
60	8" PVC Pipe, C-900 DR 18 (Gravity Sewer) 12' - 14' Depth	400	LF		$	-
61	8" PVC Pipe, C-900 DR 18 (Gravity Sewer) 14' - 16' Depth	200	LF		$	-
62	8" PVC Pipe, C-900 DR 18 (Gravity Sewer) 16' - 18' Depth	200	LF		$	-
63	10" DI Pipe, CL 350 (Gravity Sewer) 0' - 6' Depth	50	LF		$	-
64	10" DI Pipe, CL 350 (Gravity Sewer) 6' - 8' Depth	100	LF		$	-
65	10" DI Pipe, CL 350 (Gravity Sewer) 8' - 10' Depth	100	LF		$	-
66	10" DI Pipe, CL 350 (Gravity Sewer) 10' - 12' Depth	50	LF		$	-
67	10" DI Pipe, CL 350 (Gravity Sewer) 12' - 14' Depth	50	LF		$	-
68	10" DI Pipe, CL 350 (Gravity Sewer) 14' - 16' Depth	50	LF		$	-
69	10" DI Pipe, CL 350 (Gravity Sewer) 16' - 18' Depth	50	LF		$	-
70	10" PVC Pipe, C-900 DR 18 (Gravity Sewer) 0' -6' Depth	100	LF		$	-
71	10" PVC Pipe, C-900 DR 18 (Gravity Sewer) 6' - 8' Depth	400	LF		$	-
72	10" PVC Pipe, C-900 DR 18 (Gravity Sewer) 8' - 10' Depth	400	LF		$	-
73	10" PVC Pipe, C-900 DR 18 (Gravity Sewer) 10' - 12' Depth	400	LF		$	-

74	10" PVC Pipe, C-900 DR 18 (Gravity Sewer) 12' - 14' Depth	400	LF		$	-
75	10" PVC Pipe, C-900 DR 18 (Gravity Sewer) 14' - 16' Depth	200	LF		$	-
76	10" PVC Pipe, C-900 DR 18 (Gravity Sewer) 16' - 18' Depth	200	LF		$	-
77	12" DI Pipe, CL 350 (Gravity Sewer) 0' - 6' Depth	50	LF		$	-
78	12" DI Pipe, CL 350 (Gravity Sewer) 6' - 8' Depth	100	LF		$	-
79	12" DI Pipe, CL 350 (Gravity Sewer) 8' - 10' Depth	100	LF		$	-
80	12" DI Pipe, CL 350 (Gravity Sewer) 10' - 12' Depth	100	LF		$	-
81	12" DI Pipe, CL 350 (Gravity Sewer) 12' - 14' Depth	100	LF		$	-
82	12" DI Pipe, CL 350 (Gravity Sewer) 14' - 16' Depth	50	LF		$	-
83	12" DI Pipe, CL 350 (Gravity Sewer) 16' - 18' Depth	50	LF		$	-
84	12" PVC Pipe, C-900 DR 18 (Gravity Sewer) 0' ' 6' Depth	100	LF		$	-
85	12" PVC Pipe, C-900 DR 18 (Gravity Sewer) 6' - 8' Depth	200	LF		$	-
86	12" PVC Pipe, C-900 DR 18 (Gravity Sewer) 8' - 10' Depth	200	LF		$	-
87	12" PVC Pipe, C-900 DR 18 (Gravity Sewer) 10' - 12' Depth	100	LF		$	-
88	12" PVC Pipe, C-900 DR 18 (Gravity Sewer) 12' - 14' Depth	100	LF		$	-
89	12" PVC Pipe, C-900 DR 18 (Gravity Sewer) 14' - 16' Depth	50	LF		$	-
90	12" PVC Pipe, C-900 DR 18 (Gravity Sewer) 16' - 18' Depth	50	LF		$	-
91	16" DI Pipe, CL 350 (Gravity Sewer) 0' - 6' Depth	200	LF		$	-
92	16" DI Pipe, CL 350 (Gravity Sewer) 6' - 8' Depth	400	LF		$	-
93	16" DI Pipe, CL 350 (Gravity Sewer) 8' - 10' Depth	400	LF		$	-
94	16" DI Pipe, CL 350 (Gravity Sewer) 10' - 12' Depth	200	LF		$	-
95	16" DI Pipe, CL 350 (Gravity Sewer) 12' - 14' Depth	200	LF		$	-
96	16" DI Pipe, CL 350 (Gravity Sewer) 14' - 16' Depth	100	LF		$	-
97	16" DI Pipe, CL 350 (Gravity Sewer) 16' - 18' Depth	100	LF		$	-
98	16" PVC Pipe, C-905 DR 18 (Gravity Sewer) 0' - 6' Depth	100	LF		$	-
99	16" PVC Pipe, C-905 DR 18 (Gravity Sewer) 6' - 8' Depth	200	LF		$	-
100	16" PVC Pipe, C-905 DR 18 (Gravity Sewer) 8' - 10' Depth	200	LF		$	-
101	16" PVC Pipe, C-905 DR 18 (Gravity Sewer) 10' - 12' Depth	100	LF		$	-
102	16" PVC Pipe, C-905 DR 18 (Gravity Sewer) 12' - 14' Depth	100	LF		$	-
103	16" PVC Pipe, C-905 DR 18 (Gravity Sewer) 14' - 16' Depth	50	LF		$	-
104	16" PVC Pipe, C-905 DR 18 (Gravity Sewer) 16' - 18' Depth	50	LF		$	-
105	18" DI Pipe, CL 350 (Gravity Sewer) 0' - 6' Depth	200	LF		$	-
106	18" DI Pipe, CL 350 (Gravity Sewer) 6' - 8' Depth	400	LF		$	-
107	18" DI Pipe, CL 350 (Gravity Sewer) 8' - 10' Depth	400	LF		$	-
108	18" DI Pipe, CL 350 (Gravity Sewer) 10' - 12' Depth	200	LF		$	-
109	18" DI Pipe, CL 350 (Gravity Sewer) 12' - 14' Depth	200	LF		$	-
110	18" DI Pipe, CL 350 (Gravity Sewer) 14' - 16' Depth	100	LF		$	-
111	18" DI Pipe, CL 350 (Gravity Sewer) 16' - 18' Depth	100	LF		$	-
112	18" PVC Pipe, C-905 DR 21 (Gravity Sewer) 0' - 6' Depth	100	LF		$	-
113	18" PVC Pipe, C-905 DR 21 (Gravity Sewer) 6' - 8' Depth	200	LF		$	-
114	18" PVC Pipe, C-905 DR 21 (Gravity Sewer) 8' - 10' Depth	200	LF		$	-
115	18" PVC Pipe, C-905 DR 21 (Gravity Sewer) 10' - 12' Depth	100	LF		$	-
116	18 PVC Pipe, C-905 DR 21 (Gravity Sewer) 12' - 14' Depth	100	LF		$	-
117	18" PVC Pipe, C-905 DR 21 (Gravity Sewer) 14' - 16' Depth	50	LF		$	-
118	18" PVC Pipe, C-905 DR 21 (Gravity Sewer) 16' - 18' Depth	50	LF		$	-
119	21" DI Pipe, CL 350 (Gravity Sewer) 0' - 6' Depth	200	LF		$	-
120	21" DI Pipe, CL 350 (Gravity Sewer) 6' - 8' Depth	400	LF		$	-
121	21" DI Pipe, CL 350 (Gravity Sewer) 8' - 10' Depth	400	LF		$	-
122	21" DI Pipe, CL 350 (Gravity Sewer) 10' - 12' Depth	200	LF		$	-
123	21" DI Pipe, CL 350 (Gravity Sewer) 12' - 14' Depth	200	LF		$	-
124	21" DI Pipe, CL 350 (Gravity Sewer) 14' - 16' Depth	100	LF		$	-
125	21" DI Pipe, CL 350 (Gravity Sewer) 16' - 18' Depth	100	LF		$	-
126	21" PVC Pipe, C-905 DR 21 (Gravity Sewer) 0' - 6' Depth	100	LF		$	-
127	21" PVC Pipe, C-905 DR 21 (Gravity Sewer) 6' - 8' Depth	200	LF		$	-
128	21" PVC Pipe, C-905 DR 21 (Gravity Sewer) 8' - 10' Depth	200	LF		$	-
129	21" PVC Pipe, C-905 DR 21 (Gravity Sewer) 10' - 12' Depth	100	LF		$	-
130	21" PVC Pipe, C-905 DR 21 (Gravity Sewer) 12' - 14' Depth	100	LF		$	-
131	21" PVC Pipe, C-905 DR 21 (Gravity Sewer) 14' - 16' Depth	50	LF		$	-
132	21" PVC Pipe, C-905 DR 21 (Gravity Sewer) 16' - 18' Depth	50	LF		$	-
133	24" DI Pipe, CL 350 (Gravity Sewer) 0' - 6' Depth	200	LF		$	-
134	24" DI Pipe, CL 350 (Gravity Sewer) 6' - 8' Depth	400	LF		$	-
135	24" DI Pipe, CL 350 (Gravity Sewer) 8' - 10' Depth	400	LF		$	-
136	24" DI Pipe, CL 350 (Gravity Sewer) 10' - 12' Depth	200	LF		$	-

137	24" DI Pipe, CL 350 (Gravity Sewer) 12' - 14' Depth	200	LF		$	-
138	24" DI Pipe, CL 350 (Gravity Sewer) 14' - 16' Depth	100	LF		$	-
139	24" DI Pipe, CL 350 (Gravity Sewer) 16' - 18' Depth	100	LF		$	-
140	24" PVC Pipe, C-905 DR 21 (Gravity Sewer) 0' - 6' Depth	100	LF		$	-
141	24" PVC Pipe, C-905 DR 21 (Gravity Sewer) 6' - 8' Depth	200	LF		$	-
142	24" PVC Pipe, C-905 DR 21 (Gravity Sewer) 8' - 10' Depth	200	LF		$	-
143	24" PVC Pipe, C-905 DR 21 (Gravity Sewer) 10' - 12' Depth	100	LF		$	-
144	24" PVC Pipe, C-905 DR 21 (Gravity Sewer) 12' - 14' Depth	100	LF		$	-
145	24" PVC Pipe, C-905 DR 21 (Gravity Sewer) 14' - 16' Depth	50	LF		$	-
146	24" PVC Pipe, C-905 DR 21 (Gravity Sewer) 16' - 18' Depth	50	LF		$	-
147	Install PVC Cleanout	10	EA		$	-
148	Replace PVC Cleanout with Manhole Structure	10	EA		$	-
149	Remove Pipe 2" or 4" (Gravity Sewer)	200	LF		$	-
150	Remove Pipe 6" or 8" (Gravity Sewer)	400	LF		$	-
151	Remove Pipe 10" or 12" (Gravity Sewer)	400	LF		$	-
152	Remove Pipe 15", 16" or 18" (Gravity Sewer)	200	LF		$	-
153	Remove Pipe 21" or 24" (Gravity Sewer)	200	LF		$	-
154	4" Pipe - Install or Adjust Service Lateral 0'-6' Deep	3	EA		$	-
155	4" Pipe - Install or Adjust Service Lateral 6'-8' Deep	3	EA		$	-
156	4" Pipe - Install or Adjust Service Lateral 8'-10' Deep	3	EA		$	-
157	4" Pipe - Install or Adjust Service Lateral 10'-12'Deep	3	EA		$	-
158	4" Pipe - Install or Adjust Service Lateral 12'-14'Deep	2	EA		$	-
159	4" Pipe - Install or Adjust Service Lateral 14'-16'Deep	2	EA		$	-
160	4" Pipe - Install or Adjust Service Lateral 16'-18' Deep	2	EA		$	-
161	6" Pipe - Install or Adjust Service Lateral 0'-6' Deep	3	EA		$	-
162	6" Pipe - Install or Adjust Service Lateral 6'-8' Deep	3	EA		$	-
163	6" Pipe - Install or Adjust Service Lateral 8'-10' Deep	3	EA		$	-
164	6" Pipe - Install or Adjust Service Lateral 10'-12' Deep	3	EA		$	-
165	6" Pipe - Install or Adjust Service Lateral 12'-14' Deep	2	EA		$	-
166	6" Pipe - Install or Adjust Service Lateral 14'-16' Deep	2	EA		$	-
167	6" Pipe - Install or Adjust Service Lateral 16'-18' Deep	2	EA		$	-
168	2" Sewer Line Manhole Connection	3	EA		$	-
169	4" Sewer Line Manhole Connection	3	EA		$	-
170	6" Sewer Line Manhole Connection	5	EA		$	-
171	8" Sewer Line Manhole Connection	5	EA		$	-
172	10" Sewer Line Manhole Connection	3	EA		$	-
173	12" Sewer Line Manhole Connection	3	EA		$	-
174	16" Sewer Line Manhole Connection	3	EA		$	-
175	18" Sewer Line Manhole Connection	2	EA		$	-
176	21” Sewer Line Manhole Connection	2	EA		$	-
177	24” Sewer Line Manhole Connection	2	EA		$	-
178	2" Inside Drop Connection	3	EA		$	-
179	4" Inside Drop Connection	3	EA		$	-
180	6" Inside Drop Connection	3	EA		$	-
181	8" Inside Drop Connection	5	EA		$	-
182	10" Inside Drop Connection	3	EA		$	-
183	12" Inside Drop Connection	3	EA		$	-
184	15"/16" Inside Drop Connection	3	EA		$	-
185	18" Inside Drop Connection	2	EA		$	-
186	21" Inside Drop Connection	3	EA		$	-
187	24" Inside Drop Connection	2	EA		$	-
188	Grouting Out of Service Pipe (Force Main)	30	CY		$	-
189	Disconnect & Plug 2" or 4" Pipe	5	EA		$	-
190	Disconnect & Plug 6" or 8" Pipe	5	EA		$	-
191	Disconnect & Plug 10" or 12" Pipe	5	EA		$	-
192	2" PVC Restrained Joint Pipe & Fittings FM, SDR 21	200	LF		$	-
193	4" PVC Pipe, C-900 DR 18 (Force Main)	500	LF		$	-
194	4" PVC Restrained Joint Pipe & Fittings FM, C-900 DR 18	100	LF		$	-
195	6" PVC Pipe, C-900 DR 18 (Force Main)	500	LF		$	-
196	6" PVC Restrained Joint Pipe & Fittings FM, C-900 DR 18	100	LF		$	-
197	8" PVC Pipe, C-900 DR 18 (Force Main)	500	LF		$	-
198	8" PVC Restrained Joint Pipe & Fittings FM, C-900 DR 18	100	LF		$	-
199	10" PVC Pipe, C-900 DR 18 (Force Main)	500	LF		$	-

200	10" PVC Restrained Joint Pipe & Fittings FM, C-900 DR 18	100	LF		$	-
201	12" PVC Pipe, C-900 DR 18 (Force Main)	300	LF		$	-
202	12" PVC Restrained Joint Pipe & Fittings FM, C-900 DR 18	100	LF		$	-
203	2" Restrained Joints	20	EA		$	-
204	4" Restrained Joints	20	EA		$	-
205	6" Restrained Joints	20	EA		$	-
206	8" Restrained Joints	20	EA		$	-
207	10" Restrained Joints	20	EA		$	-
208	12" Restrained Joints	20	EA		$	-
209	2"-4" Forcemain Pipe and Appurtenances - Over Depth Excavation	400	LF		$	-
210	6"-8" Forcemain Pipe and Appurtenances - Over Depth Excavation	500	LF		$	-
211	10"-12" Forcemain Pipe and Appurtenances - Over Depth Excavation	200	LF		$	-
212	Remove Out of Service Pipe 2" or 4" (Force Main)	500	LF		$	-
213	Remove Out of Service Pipe 6" or 8" (Force Main)	1000	LF		$	-
214	Remove Out of Service Pipe 10" or 12" (Force Main)	500	LF		$	-
215	2" Sleeved Connection	6	EA		$	-
216	4" Sleeved Connection	6	EA		$	-
217	6" Sleeved Connection	10	EA		$	-
218	8" Sleeved Connection	10	EA		$	-
219	10" Sleeved Connection	4	EA		$	-
220	12" Sleeved Connection	4	EA		$	-
221	Reverse Deadman for 2" or 4" Pipe	3	EA		$	-
222	Reverse Deadman for 6" or 8" Pipe	5	EA		$	-
223	Reverse Deadman for 10" or 12" Pipe	3	EA		$	-
224	DI Fittings FM C 153 (Compact Body)	2	TN		$	-
225	2" Air Release Assembly (In-line)	2	EA		$	-
226	2" Air Release Assembly (Offset)	2	EA		$	-
227	2" RWGV (Resilient Wedge Gate Valve) & Box	4	EA		$	-
228	4" RWGV & Box C 515	4	EA		$	-
229	6" RWGV & Box C 515	10	EA		$	-
230	8" RWGV & Box C 515	5	EA		$	-
231	10" RWGV & Box C 515	2	EA		$	-
232	12" RWGV & Box C 515	2	EA		$	-
233	Adjust Valve Box to Finished Grade (In Pavement)	5	EA		$	-
234	Adjust Valve Box to Finished Grade (Outside of Pavement)	5	EA		$	-
235	4" Line Stop	1	EA		$	-
236	6" Line Stop	1	EA		$	-
237	8" Line Stop	1	EA		$	-
238	10" Line Stop	1	EA		$	-
239	12" Line Stop	1	EA		$	-
240	4" x 2" Tapping Saddle Valve & Box	2	EA		$	-
241	4" x 4" Tapping Sleeve Valve & Box	2	EA		$	-
242	6" x 2" Tapping Saddle Valve & Box	2	EA		$	-
243	6" x 4" Tapping Sleeve Valve & Box	2	EA		$	-
244	6" x 6" Tapping Sleeve Valve & Box	2	EA		$	-
245	8" x 2" Tapping Saddle Valve & Box	2	EA		$	-
246	8" x 4" Tapping Sleeve Valve & Box	2	EA		$	-
247	8" x 6" Tapping Sleeve Valve & Box	2	EA		$	-
248	8" x 8" Tapping Sleeve Valve & Box	2	EA		$	-
249	10" x 2" Tapping Saddle Valve & Box	2	EA		$	-
250	10" x 4" Tapping Sleeve Valve & Box	2	EA		$	-
251	10" x 6" Tapping Sleeve Valve & Box	2	EA		$	-
252	10" x 8" Tapping Sleeve Valve & Box	2	EA		$	-
253	10" x 10" Tapping Sleeve Valve & Box	2	EA		$	-
254	12" x 2" Tapping Saddle Valve & Box	2	EA		$	-
255	12" x 4" Tapping Sleeve Valve & Box	2	EA		$	-
256	12" x 6" Tapping Sleeve Valve & Box	2	EA		$	-
257	12" x 8" Tapping Sleeve Valve & Box	2	EA		$	-
258	12" x 10" Tapping Sleeve Valve & Box	2	EA		$	-
259	12" x 12" Tapping Sleeve Valve & Box	2	EA		$	-
260	4' Dia. - Precast Manhole Standard	30	VF		$	-
261	4' Dia. - Precast Manhole Inside Drop	10	VF		$	-
262	4' Dia. - Precast Manhole Outside Drop	10	VF		$	-

263	5' Dia. - Precast Manhole Standard	30	VF		$	-
264	5' Dia. - Precast Manhole Inside Drop	10	VF		$	-
265	5' Dia. - Precast Manhole Outside Drop	10	VF		$	-
266	5' Dia. - Precast Air Release Manhole	10	VF		$	-
267	6' Dia. - Precast Manhole Standard	30	VF		$	-
268	6' Dia. - Precast Manhole Inside Drop	10	VF		$	-
269	6' Dia. - Precast Manhole Outside Drop	10	VF		$	-
270	Removal of Existing Manhole	3	EA		$	-
271	Remove Existing Manhole Additional	30	VF		$	-
272	Initial Excavation - 0'-6' Deep	5	EA		$	-
273	Initial Excavation - 6'-8' Deep	6	EA		$	-
274	Initial Excavation - 8'-10' Deep	6	EA		$	-
275	Initial Excavation - 10'-12' Deep	6	EA		$	-
276	Initial Excavation - 12'-14' Deep	3	EA		$	-
277	Initial Excavation - 14'-16' Deep	3	EA		$	-
278	Initial Excavation - 16'-18' Deep	2	EA		$	-
279	Initial Excavation - 18'-20' Deep	2	EA		$	-
280	Additional Excavation - 0'-6' Deep	100	LF		$	-
281	Additional Excavation - 6'-8' Deep	100	LF		$	-
282	Additional Excavation - 8'-10' Deep	100	LF		$	-
283	Additional Excavation - 10'-12' Deep	100	LF		$	-
284	Additional Excavation - 12'-14' Deep	100	LF		$	-
285	Additional Excavation - 14'-16' Deep	100	LF		$	-
286	Additional Excavation - 16'-18' Deep	50	LF		$	-
287	Additional Excavation - 18'-20' Deep	50	LF		$	-
288	Wastewater Bypass Pumping, Set up, 6" - 10" diameter	5	EA		$	-
289	Wastewater Bypass Pumping, Set up, 12" - 14" diameter	2	EA		$	-
290	Wastewater Bypass Pumping, Set up, 15" - 21" diameter	2	EA		$	-
291	Wastewater Bypass Pumping, Set up, 24" diameter	2	EA		$	-
292	Wastewater Bypass Pumping, Operation, 6" - 10" diameter	10	DAY		$	-
293	Wastewater Bypass Pumping, Operation, 12" - 14" diameter	5	DAY		$	-
294	Wastewater Bypass Pumping, Operation, 15" - 21" diameter	5	DAY		$	-
295	Wastewater Bypass Pumping, Operation, 24" diameter	2	DAY		$	-
296	6" Dia. Pipe Gravity Sewer Point Repair (DI Replacement Pipe)	2	EA		$	-
297	6" Dia. Pipe Gravity Sewer Point Repair (PVC Replacement Pipe)	5	EA		$	-
298	8" Dia. Pipe Gravity Sewer Point Repair (DI Replacement Pipe)	2	EA		$	-
299	8" Dia. Pipe Gravity Sewer Point Repair (PVC Replacement Pipe)	5	EA		$	-
300	10" Dia. Pipe Gravity Sewer Point Repair (DI Replacement Pipe)	2	EA		$	-
301	10" Dia. Pipe Gravity Sewer Point Repair (PVC Replacement Pipe)	5	EA		$	-
302	12" Dia. Pipe Gravity Sewer Point Repair (DI Replacement Pipe)	2	EA		$	-
303	12" Dia. Pipe Gravity Sewer Point Repair (PVC Replacement Pipe)	5	EA		$	-
304	15"/16" Dia. Pipe Gravity Sewer Point Repair (DI Replacement Pipe)	2	EA		$	-
305	15"/16" Dia. Pipe Gravity Sewer Point Repair (PVC Rplacement Pipe)	2	EA		$	-
306	18" Dia. Pipe Gravity Sewer Point Repair (DI Replacement Pipe)	2	EA		$	-
307	18" Dia. Pipe Gravity Sewer Point Repair (PVC Replacement Pipe)	2	EA		$	-
308	21" Dia. Pipe Gravity Sewer Point Repair (DI Replacement Pipe)	2	EA		$	-
309	21" Dia. Pipe Gravity Sewer Point Repair(PVC Replacement Pipe)	2	EA		$	-
310	24" Dia. Pipe Gravity Sewer Point Repair (DI Replacement Pipe)	2	EA		$	-
311	24" Dia. Pipe Gravity Sewer Point Repair (PVC Replacement Pipe)	2	EA		$	-
312	6" Dia. Pipe Gravity Sewer Point Repair - Additional Length (DI Replacement Pipe)	20	LF		$	-
313	6" Dia. Pipe Gravity Sewer Point Repair - Additional Length (PVC Replacement Pipe)	50	LF		$	-
314	8" Dia. Pipe Gravity Sewer Point Repair - Additional Length (DI Replacement Pipe)	20	LF		$	-
315	8" Dia. Pipe Gravity Sewer Point Repair - Additional Length (PVC Replacement Pipe)	100	LF		$	-
316	10" Dia. Pipe Gravity Sewer Point Repair - Additional Length (DI Replacement Pipe)	20	LF		$	-
317	10" Dia. Pipe Gravity Sewer Point Repair - Additional Length (PVC Replacement Pipe)	100	LF		$	-
318	12" Dia. Pipe Gravity Sewer Point Repair Additional Length (DI Replacement Pipe)	50	LF		$	-
319	12" Dia. Pipe Gravity Sewer Point Repair - Additional Length (PVC Replacement Pipe)	20	LF		$	-
320	15"/16" Dia. Pipe Gravity Sewer Point Repair - Additional Length (DI Replacement Pipe)	20	LF		$	-
321	15"/16" Dia. Pipe Gravity Sewer Point Repair - Additional Length (PVC Replacement Pipe)	50	LF		$	-
322	18" Dia. Pipe Gravity Sewer Point Repair - Additional Length (DI Replacement Pipe)	20	LF		$	-
323	18" Dia. Pipe Gravity Sewer Point Repair - Additional Length (PVC Replacement Pipe)	50	LF		$	-
324	21" Dia. Pipe Gravity Sewer Point Repair - Additional Length (DI Replacement Pipe)	20	LF		$	-
325	21" Dia. Pipe Gravity Sewer Point Repair - Additional Length (PVC Replacement Pipe)	50	LF		$	-

326	24" Dia. Pipe Gravity Sewer Point Repair - Additional Length (DI Replacement Pipe)	20	LF		$	-
327	24" Dia. Pipe Gravity Sewer Point Repair - Additional Length (PVC Replacement Pipe)	50	LF		$	-
328	2" Dia. Pipe Forcemain Point Repair	3	EA		$	-
329	4" Dia. Pipe Forcemain Point Repair	3	EA		$	-
330	6" Dia. Pipe Forcemain Point Repair	3	EA		$	-
331	8" Dia. Pipe Forcemain Point Repair	3	EA		$	-
332	10" Dia. Pipe Forcemain Point Repair	2	EA		$	-
333	12" Dia. Pipe Forcemain Point Repair	2	EA		$	-
334	Replace Manhole Ring & Cover (Asphalt Pavement)	5	EA		$	-
335	Replace Manhole Ring & Cover (Unpaved)	5	EA		$	-
336	Manhole Bench Replacement, 4' Diameter	2	EA		$	-
337	Manhole Bench Replacement, 5' Diameter	2	EA		$	-
338	Manhole Bench Replacement, 6' Diameter	2	EA		$	-
339	Adjust Manhole Ring & Cover to Finished Grade (In Pavement)	5	EA		$	-
340	Adjust Manhole Ring & Cover to Finished Grade (Outside of Pavement)	5	EA		$	-
341	Flowable Concrete Fill	100	CY		$	-
342	Roadway Base, Lime Rock, Primed, Min. LBR 100, Variable Thickness	120	CY		$	-
343	Roadway Base, Crushed Concrete/Graded Aggregate, Min. LBR 100, Variable Thickness	120	CY		$	-
344	Superpave Asphalt Base, Type B 12.5, Variable Thickness	50	TN		$	-
345	Superpave Asphalt Concrete, Type SP 9.5, Fine, Traffic Level C, Variable Thickness	100	TN		$	-
346	Superpave Asphalt Concrete, Type SP 12.5, Fine, Traffic Level C, Variable Thickness	100	TN		$	-
347	Pavement, Cement Concrete, 6" Min Thickness (Driveways)	100	SY		$	-
348	Pavement, Cement Concrete, 8" Thick	100	SY		$	-
349	Driveway Restoration, In Kind, Decorative Block	50	SY		$	-
350	Milling Existing Asphalt Pavement, 1/2" Average Depth	150	SY		$	-
351	Milling Existing Asphalt Pavement, 3/4" Average Depth	150	SY		$	-
352	Milling Existing Asphalt Pavement, 1" Average Depth	150	SY		$	-
353	Curb & Gutter, Concrete, FDOT Type D	100	LF		$	-
354	Curb & Gutter Concrete, FDOT Type F	100	LF		$	-
355	Curb & Gutter, Concrete, Miami Curb	300	LF		$	-
356	Valley Gutter, Concrete, PCED Index 1315	100	LF		$	-
357	Sidewalk, Concrete, 4" Min. Thickness, Remove and Replace	500	SF		$	-
358	Sidewalk, Concrete, 6" Min. Thickness, Remove and Replace	500	SF		$	-
359	Sodding	4500	SF		$	-
360	Sectional Liner, 6" - 24" Pipe	50	EA		$	-
				SUBTOTAL - POINT REPAIRS	$	-
				GRAND TOTAL	$	-

Bid quantities are for comparison purposes only.
This contract consists of various projects which are not yet defined and no quantities are guaranteed.

155 Corey Avenue
St. Pete Beach, FL 33706-1839
www.stpetebeach.org

ADDENDUM 1

Wastewater System Rehabilitation Services

Issued 3/23/2026

*Sealed bids must be received by **9:00 AM on 04/08/2026** electronically via Bonfire. Bids received after the deadline will not be accepted. They will be publicly opened and read at **10:00 AM on 04/08/2026**. All bidders are invited to attend this bid Opening.*

Addendum 1 includes:

Pre-bid Minutes
Questions and Answers

Optional - Pre-Bid Meeting Minutes
RFP: Wastewater System Rehab Services
March 18, 2026
11:00 AM

Staff Members Present:
Sara Spain, Procurement Manager
John Taylor, Assistant Finance Director
Camden Mills, Public Services Director
Brian Peckins, Assistant Public Services Director
Dejan Milosevic, Project Manager
Michael Weaver, Infrastructure Operations Manager
Brian Gelock, Public Services
Kenneth Kosbab, Public Services
Shawn Clark, Public Services
Ariana Wilson-Romo, Exec. Assistant City Clerk's Office

Others Present:

Name	***Company***	***Contact***
Abbey Boyle	PCS Civil	abbeyb@pcscivilinc.com
Chad Holmes	Tnemec	cholmes@tnemec.com
Chris Currie	Inliner Solutions	Chris.currie@puriscorp.com
Denise Davis	Gulf Coast Underground LLC	ddavis@gogcu.com
Tom Brown	Restoration & Protective Solutions	tom@rps.llc
Drew Giustina	Restoration & Protective Solutions	andrew@rps.llc
Emily Bennett	Insituform Technologies LLC	ebennett@azuria.com
Austen Wagoner	Engineered Coatings Solutions LLC	awagoner@ecscoatings.com
Tristan Hine	PCS Civil	tristanh@pcscivilinc.com
Kevin Rowland	Did not provide	Did not provide
Nolan Leal	Rowland DE LLC	nleal@acus-us.com
Mary Hortman	Inliner Solutions LLC	flbids@puriscorp.com
Sawyer Hill	Elite Industrial Painting Inc.	sawyer@eipainting.com
Kyle Matheny	Kimley Horn and Associates	Kyle.matheny@kimley-horn.com
Shawn Ready	Did not provide	Shawn.ready@vortexcompanies.com
Amanda Gonzalez	Kimley Horn and Associates	Amanda.gonzalez@kimley-horn.com
Bruno Sequeira	BCS Construction Group	bsequeira@bcsconstructiongrp.com
Bob Baker	Did not provide	Did not provide
Mark Cassineri	Inliner Solutions	Mark.cassineri@puriscorp.com
Shayna Agosta	Did not provide	sagosta@nwmcc.com

The meeting was called to order at 11:03 AM.

All attendees were present via Teams.

Ms. Spain briefly reviewed important dates and times which are as follows:

- Receipt of questions due 3/25 at 10AM
- Bids due 4/8 by 9AM
- Bid opening 4/8 at 10AM

She requested that any questions be submitted in writing to purchasing@stpetebeach.org. Questions will be answered via an addendum that will be posted to the City website and Bonfire.

Public Services Director Camden Mills summarized that this project will be for as-needed repairs to the City's wastewater collection system. Multiple vendors may be awarded.

The following questions were asked:
Q: Bid bond required? A: Will clarify via an addendum.
Q: Can previous bid tabulations for this project be shared? A:No bid tabs to provide, this is the first time the City has issued a project like this.
Q: Is there anticipated work already prepared? A: Yes, this can be shared via an addendum.
Q: Anticipated annual budget? A: Yes, will clarify in an addendum.
Q: Is there a self- performed percentage requirement? A: Will clarify via an addendum.
Q: Does the City need to be listed for proof of insurance? A: Yes.
Q: Can you provide the address exactly how it needs to be for the COIs? A: Yes.

Mr. Taylor clarified that this is bondable based on the project at that time, meaning a bid bond is not required to submit on this bid however it may be required based on project costs.

There being no additional questions, the meeting was adjourned at 11:16 AM.

Questions and Answers:

1. **Can you confirm if there are any DBE Requirements or good faith efforts to complete for this project? No. Because there are no federal funds nor does the City of St. Pete Beach include these requirements in the Procurement Ordinance, there are no DBE requirements.**
2. **Are there any SBEs/DBEs requirements? No. Because there are no federal funds nor does the City of St. Pete Beach include these requirements in the Procurement Ordinance, there are no SBE/DBE requirements.**
3. **Is a bid bond required? If so, what is the percentage? Yes, 5% of the total bid price.**
4. **What is the engineer's estimate / annual budget cost? Estimated $1,000,000 to $2,500,000 annually.**
5. **I was not able to locate a proposed budget for this project, would you happen to have that information available? Estimated $1,000,000 to $2,500,000 annually.**
6. **Are there any liquidated damages? Yes. If the work embraced by this Contract is not completed on or before the date set for completion or any extension thereof, the actual damages for the delay will be impossible to determine and in lieu thereof, the Contractor shall pay to the City fixed, agreed, and liquidated damages in the amount of either Five-Hundred Dollars ($500) per day for each calendar day of delay until the work is satisfactorily completed.**
7. **Hinterland Group respectfully request that Refratta's 100% pure-fused calcium aluminate coating be approved as an equal under that manhole rehabilitation specifications. Refratta's specs are attached for your review. The specifications for CIPP liner materials and manhole lining materials do not specify specific manufacturers and/or products for use under this contract. As specified in Specification Section 1.09, all materials, appliances, and types of construction shall be in accordance with the Technical Specifications.**
8. **Hinterland Group respectfully requests that Global Materials Company be approved as a CIPP liner manufacturer. Global specs are attached for your review. The specifications for CIPP liner materials and manhole lining materials do not specify specific manufacturers and/or products for use under this contract. As specified in Specification Section 1.09, all materials, appliances, and types of construction shall be in accordance with the Technical Specifications.**
9. **Is there a plan holders list for this project? Please see minutes with organizations present at the pre-bid meeting. The City of St. Pete Beach cannot see who has viewed the bid documents.**
10. **Do you have a plan holders list you could provide me for the above referenced bid? Please see minutes with organizations present at the pre-bid meeting. The City of St. Pete Beach cannot see who has viewed the bid documents.**
11. **Will the Owner/Engineer please provide a copy of the current plan holders list? Please see minutes with organizations present at the pre-bid meeting. The City of St. Pete Beach cannot see who has viewed the bid documents.**
12. **Will the Owner/Engineer please provide the anticipated annual spending for this contract to include each rehab division? Estimated $1,000,000 to $2,500,000 annually total.**
13. **Will the Engineer/Owner please provide previous itemized bid tabulation or contract pricing for each division/ contract? The City of St. Pete Beach does not have bid tabulations within the last 5 years.**
14. **Will the Owner/Engineer provide example work orders from previous contract periods? No.**

15. **Will the Owner provide a disposal site for pipe cleaning debris at no cost to the Contractor? Yes.**
16. **Will the Contractor be allowed to increase pricing from year 1 to subsequent years? Contract prices to remain firm through the first three contract years. Sixty days prior to the contract renewal date, contract/vendor may request a price adjustment.**
17. **Prebid question: Bid bond required? Yes, 5% of the total bid price.**
18. **Prebid question: Can previous bid tabulations for this project be shared? The City of St. Pete Beach does not have bid tabulations within the last 5 years.**
19. **Prebid question: Is there anticipated work already prepared? Bid form reflects anticipated work. City is underway with cleaning/televising entire wastewater collection system to analyze current conditions and will reprioritize if needed once that project is complete (estimated Dec 2026).**
20. **Prebid question: Anticipated annual budget? Estimated $1,000,000 to $2,500,000 annually.**
21. **Prebid question: Is there a self-performed percentage requirement? Yes, 100% Performance Bond.**
22. **Prebid question: Does the City need to be listed for proof of insurance? Yes**
23. **Prebid question: Can you provide the address exactly how it needs to be for the COIs?**
    City of St. Pete Beach
    155 Corey Avenue
    St. Pete Beach, FL 33706



155 Corey Avenue
St. Pete Beach, FL 33706-1839
www.stpetebeach.org

ADDENDUM 2

Wastewater System Rehabilitation Services

Issued 3/27/2026

*Sealed bids must be received by **9:00 AM on 04/08/2026** electronically via Bonfire. Bids received after the deadline will not be accepted. They will be publicly opened and read at **10:00 AM on 04/08/2026**. All bidders are invited to attend this bid Opening.*

Addendum 2 includes:

Questions and Answers

Questions and Answers:

1. **Is there a form to fill out for our sub-contractor for the bid submittal? Do I need to add anything for them with our bid? You are welcome to list them as a sub-contractor in your proposal, but there is no form. The sub-contractor is the contractor's financial responsibility.**

2. **Please clarify the Period of Performance in the General Contract Terms. This states base scope target completion of January 2027 while other parts of the RFP specify a three year contract. Three-year contract with options for up to (2) 1-year extensions for ongoing work.**

3. **Will any bonding be required? Yes, 5% total bid cost.**

4. **How will work be assigned on this contract? Will multiple contractors be assigned to a single project? Multiple contractors may be assigned to a single project, depending on scope required and contractor's abilities.**

5. **Is there an estimated yearly budget for this contract? $1M to $2.5M annually.**

6. **Are there any previous detailed, itemized bid tabs available for this or other similarly bid projects? Please see minutes with organizations present at the pre-bid meeting. The City of St. Pete Beach cannot see who has viewed the bid documents.**

7. **Is Item PL-50, (Grout, Gal) to be used in conjunction with items PL-47 through PL-49? Yes, please refer to the technical specifications. This pay item is applicable only in conjunction with Pay Items 47 through 49.**

8. **Can the owner add a Lateral Grouting, Per EA, Bid Item? Yes, pay item 55 has been added under pipe lining.**

9. **Does the owner have an annual budget for the Wastewater System Pipe (CIPP) Lining portion? No specific budget per portion.**

10. **In the addendum it says we need a 5% Bid Bond. Do you have a form to provide, or can our Surety use there's? We do not have a form. This would come from your surety company for the bond.**

11. **Several vendors have asked about using specific material manufacturers. The specifications for manhole lining materials do not specify specific manufacturers and/or products for use under this contract. As specified in Specification Section 1.09, all materials, appliances, and types of construction shall be in accordance with the Technical Specifications. Accordingly, bidders may base their bids on any manhole lining system that meets the performance and technical requirements of the specifications. Any proposed material or product will be subject to review for compliance with the Contract Documents through the submittal process after award.**

12. **In Addendum 1, there are contradicting answers for the bid bond needing to be submitted. On page 3 after the questions asked during the pre-bid, it states that it is bondable based on the project at that time, meaning a bid bond wasn't required to be submitted. On page 4 and 5, it states a bid bond of 5% is required to be submitted. Can you please clarify if a bid bond is required to be submitted with the proposal, and if so, what percentage is required? Discussion after the meeting led the City of St. Pete Beach to require a bid bond of 5% total bid cost, which must be submitted with the proposal.**

13. **Are alternate products being considered if they meet specification requirements of the proposed products? The specifications for manhole lining materials do not specify specific manufacturers and/or products for use under this contract. As specified in Specification Section 1.09, all materials, appliances, and types of construction shall be in accordance with the Technical Specifications. Accordingly, bidders may base their bids on any manhole lining system that meets the performance and technical requirements of the specifications. Any proposed material or product will be subject to review for compliance with the Contract Documents through the submittal process after award.**

14. **Do we have to fill out each individual section of the bid form, or can we bid the section that only pertains to our capabilities? See IV. General Contract Terms: It is not mandatory to submit a proposal for every item listed. A bidder may bid on any, all, or none of the items.**

15. **What is the anticipated work order size and how many work orders are anticipated to be issued annually? City anticipates issuing 3 purchase orders annually, 1 for each scope (pipe lining, point repairs, manhole rehabilitation), with multiple work orders per purchase order.**

16. **Will the work orders be issued in geographically grouped areas, or will the work be scattered across the City? Work orders will be issued in geographically grouped areas.**

17. **The RFP page 6 states "Vendors may submit proposals for all, some, or only one of the categories" and later "bidder may bid on any, all, or none of the items." Please confirm if bidders are required to bid all items with a category (Manhole Rehabilitation, Pipe Lining, and/or Point Repairs). You may bid certain line items only.**

18. **What are the allowable working hours? Standard work hours shall be from 7:30 AM until 6:00 PM, Monday through Saturday. No work shall take place on Sundays or on official City holidays without prior approval by the City Manager or designee at least 1 week prior to the scheduled work. A list of current official City holidays can be found on the City's Human Resources website at http://www.stpetebeach.org/hr/holidays.html. Contractor will coordinate scheduling of work with the City's Project Manager and City's Inspector.**

19. **Pipe Lining Item 15 for 6" Diameter CIPP shows a thickness of 6.0mm. This is not feasible for 6" diameter pipe and industry standard is 4.5mm. Please confirm 4.5mm will be acceptable for 6" diameter CIPP. 4.5mm is acceptable. This is acceptable. Pay item 15 has been updated accordingly.**

20. Regarding Mobilization bid item, please confirm this will be paid for each work order, and will not be paid only once per year. Please refer to the technical specifications. The quantity of mobilization to be paid for under this item shall be measured as one unit each (EA) per job assignment. One (1) mobilization will be allowed for each job assignment, project, or work order no matter how many times the equipment must be relocated by loading, transporting, and unloading, or under its own power to complete the job assignment or project. Payment for mobilization shall not exceed 10 percent (10%) of the total Contract cost unless the Contractor can prove to the City that his actual mobilization cost exceeds 10 percent (10%).

21. Section 2 Pay Item Descriptions for Mobilization includes "establishment of Subcontractor's temporary offices, buildings, …" Please confirm a temporary office or building is not required. Not required.

22. Section 2 Pay Item Descriptions for Bypass Pumping Setup & Operation states this "Pay Item is applicable on projects or repairs that have high flow or require an over night by pass operation." What is considered "high flow"? Will this item be paid for a "typical" bypass for an 8" diameter CIPP installation? Please elaborate on the requirements for this item and how it will be paid. These pay items apply when bypass pumping is needed to complete the repair without overflows. Pay item 26 would be used for bypass for an 8" diameter installation. The quantity to be measured for payment under this Pay Item will be the actual number of by-pass pumping set ups and operations, per part of day, required by the Engineer in the work. The minimum measurement for this pay item is eight (8) hours or 0.333 days and is measured from the time that the sewage is actually by-passed. This eight (8) hour minimum (0.333 days) includes full compensation for set up and operation for up to the first eight (8) hour period. Additional time will be in tenths of the day or twenty-four (24) hour period. The quantities determined shall be paid per day (DAY) or portion of day of by-pass pumping set up and operation.

23. The measurement for bypass also states the minimum measurement is 8 hours and will be paid for the first 8 hour period with additional time in tenths of a day. Please explain how this will be paid for say a 10 hour day. For example with $1,000/EA Setup and $500/Day: If a 10 hour day is being bypassed, will the contractor be paid the $1000 setup plus 2 hours (10-8 hours) / 24 hours x $1000 = $83.33 + $500 for a total of $1,583.33? In this scenario, payment would be total $1,216.50. ($1,000 setup + $500 operation x (0.333 day + 0.1 day))

24. Section 2 Pay Item Descriptions for CIPP Main Liner include cleaning and pre/post CCTV inspection. However, there are bid items for Normal Cleaning and Specialty Cleaning. Please confirm cleaning and pre CCTV inspection to prep the pipe for CIPP lining will be paid under the Normal Cleaning and/or Specialty Cleaning items, and is not incidental to CIPP Main Liner items. Cleaning and pre CCTV Cleaning and pre-CCTV inspection to prep the pipe for CIPP is incidental to CIPP main liner items. Payment shall include all materials, labor, equipment, and supplies necessary for the CIPP Main Liner installation, and specifically includes, but is not limited to, pre-rehabilitation CCTV inspection, liner sampling and storage of samples for testing, sealing liner connections at manholes, matching existing manhole lining to the CIPP

liner, matching existing flow channels and surfacing to the liner to minimize turbulence, cleaning, removal and disposal of all sand, rubble, deposits, and other accumulated debris after liner installation, post-rehabilitation CCTV inspection video and log, restoration, and all other appurtenant work as specified. Pay items 39-46 are for services requiring cleaning only.

25. Section 2 Pay Item Descriptions for Chemical Sealing of Host Pipe states this item will be paid for each pipe "regardless of…the number of infiltration points sealed." This currently reads that a pipe with one single joint with infiltration will be paid the same as a different pipe with 80 joints that all need to be sealed. Bidders have no way of knowing how many joints may be leaking on a particular segment which could drastically skew the pricing. Would you please consider revising this item to include Chemical Sealing of Host Pipe per Joint or per Service Connection? This pay item is to provide a cost for sealing excessively leaking infiltration points prior to lining of a host pipe. Revising this to a per-seal price would introduce the need to verify the number of leaking joints prior to approving a pay application following execution of the work. For tracking purposes, a flat-fee price will remain.

26. Section 2 Pay Item Descriptions for Service Reconnection states each service shall be grouted 18-inches into the lateral. Will this remain a requirement? If so, would you please consider adding Service Reconnection bid items per pipe diameter as there is substantial cost difference in grouting laterals per main diameter? Main diameter should not be a big factor, the lateral diameters are fairly consistent and the annular space volume will be dependent on the lateral diameter, not the main diameter. Pay item to remain as is.

27. The CIPP Spec (Section 21), paragraph 21.11.02 states up to 10% of the installed liners may be tested for exfiltration per ASTM F1216, Section 8.2 which is a hydrostatic pressure test. This test is not applicable to any line with services and adds unnecessary cost to the project as any potential defects will be verified via the post-rehab CCTV inspection. Would you please consider removing this unnecessary requirement which will ultimately create the most competitive pricing for the Owner? Section 21.11.02 specifies the testing is to be performed prior to any service lateral reconnections. Pay item to remain as-is.

28. Also, please accept SAK Construction, LLC as Installer and Pipenology, LLC as Manufacturer of CIPP Liners, in regards to the above referenced project. Per prequalification requirements on pages 1 and 2 of the Section 21 – CIPP Specification, please see attached documents for your review: SAK Company Information, CIPP Completed Project List, Pipenology CIPP Liner Submittal. The specifications for manhole lining materials do not specify specific manufacturers and/or products for use under this contract. As specified in Specification Section 1.09, all materials, appliances, and types of construction shall be in accordance with the Technical Specifications. Accordingly, bidders may base their bids on any manhole lining system that meets the performance and technical requirements of the specifications. Any proposed material or product will be subject to review for compliance with the Contract Documents through the submittal process after award.

29. **Can you please specify whether the minimum CIPP thicknesses are pre- or post- installation measurements? Post-installation (finished-in-place) thickness.**

30. **Will the Owner provide water, at no cost to the contractor, for work requiring water? Yes.**

155 Corey Avenue
St. Pete Beach, FL 33706-1839
www.stpetebeach.org

ADDENDUM 3

Wastewater System Rehabilitation Services

Issued 3/30/2026

*Sealed bids must be received by **9:00 AM on 04/08/2026** electronically via Bonfire. Bids received after the deadline will not be accepted. They will be publicly opened and read at **10:00 AM on 04/08/2026**. All bidders are invited to attend this bid Opening.*

Addendum 3 includes:

Questions and Answers

Questions and Answers:

Do we add all documents including the bid for (Price) to one PDF for submission? You may submit more than one document. They do not have to all be on one PDF.

For pay items 34-36 and pay items 40-42, the units are EA. Can you provide the depths of the manholes under "EACH" since this will significantly affect the price? Or can you change the units to VF as you have on the pay items for Additional MH Coating? 48" diameter manhole depths range from approx. 2 to 14 ft, with the majority between 4 and 6 ft.

EXHIBIT "C"

Vendor Bid/Proposal

(Place Vendor's Bid/Proposal Behind this Page)

City of St Pete Beach
Request for Proposal

Wastewater System Rehabilitation Services

Timeline	Date	Time
Publication of Bid	03/11/2026	8:00 AM
Pre-Bid Meeting	03/18/2026	11:00 AM
Deadline for Question Submission	03/25/2026	10:00 AM
Submittal Deadline electronically via Bonfire	04/08/2026	9:00 AM
Submittal Opening	04/08/2026	10:00 AM

Submittals are due on or before
04/08/2026 at 9:00 AM EST
Electronically Via Bonfire Only

TABLE OF CONTENTS

I. INVITATION 3
II. STATEMENT OF WORK AND TECHNICAL SPECIFICATIONS 4
III. BID FORM 5
IV. GENERAL CONTRACT TERMS 6
V. REFERENCES & MINIMUM QUALIFICATIONS 17
VI. CONTRACTOR'S PROPOSAL SUBMITTAL 18
VII. PUBLIC ENTITY CRIMINAL AFFIDAVIT 19
VIII. NON-COLLUSION AFFADAVIT 21

I. INVITATION

The City of St Pete Beach has issued this Request for Proposal (RFP) to solicit competitive bids and proposals from Proposers for Wastewater System Rehabilitation Services, including manhole rehabilitation, pipe lining and point repairs.

The proposed work will be located within the City of St. Pete Beach in Pinellas County, FL, throughout the entire wastewater collection and transmission system. Each asset to be rehabilitated and the type of rehabilitation required will be identified in each individual Work Order with the location shown on corresponding geographical exhibits.

The successful proposer shall furnish all labor, superintendence, materials, power, light, heat, fuel, water, tools, appliances, equipment, supplies, shop drawings, working drawings and other means of construction necessary or proper for performing and completing the work. The Contractor is responsible for obtaining all required permits necessary for the work, including all applications and review fees, other than those permits which may have already been obtained. The Contractor shall perform and complete the work in a speedy and efficient manner consistent with safety of life and property and to the city's satisfaction, and in strict accordance with the Contract Documents. The Contractor shall repair or restore all structures and property damaged or disturbed during performance of the work.

The types of projects include:

- **Wastewater System Manhole Rehabilitation (Manhole Project):**
  The Contractor shall furnish all labor, material, equipment, and services necessary for manhole rehabilitation. The work shall be completed at various locations through the City's wastewater service area and shall include, but is not limited to, maintenance of traffic, temporary by-pass pumping and/or diversion of wastewater, cleaning, removal and disposal of all sand, rubble, deposits, and other accumulated debris, re-building manhole bench and channels, ring (frame) and cover adjustment and replacement, pavement restoration, inflow/infiltration elimination, surface preparation, cementitious and polymer coatings installation, internal chimney sealing, manhole cover insert installation, testing, project site cleanup and restoration, and all other incidentals as required and directed by the Engineer to complete the work.
- **Wastewater System Pipe Lining (Lining Project):**
  The Contractor shall furnish all labor, material, equipment, and services necessary for wastewater pipe rehabilitation using Cured-In-Place-Pipe (CIPP) lining. The work shall be completed at various locations through the City's wastewater service area and shall include, but is not limited to, maintenance of traffic, temporary by-pass pumping and/or diversion of wastewater, cleaning, removal and disposal of all sand, rubble, deposits, and other accumulated debris, CIPP liner installation, reconnection of service laterals, testing of CIPP liners, project site cleanup and restoration, and all other incidentals as required and directed by the Engineer to complete the work.
- **Wastewater System Point Repairs (Point Repair Project):**
  The Contractor shall furnish all labor, material, equipment, and services necessary for wastewater point repairs. The work shall be completed at various locations throughout the City's wastewater service area and shall include, but is not limited to, maintenance of traffic, temporary by-pass pumping and/or diversion of wastewater, dewatering, directional drilling, jack and boring, remove unsuitable materials below trench grade, sanitary sewer gravity and force main installation, force main and gravity main connections, remove out of service gravity and force mains, install manhole connections, grout out of service pipe, install valves and associated appurtenances, project site cleanup and restoration, and all other incidentals as required and directed by the Engineer to complete the work.

CONTACT INFORMATION
Procurement Manager – Sara Spain
Email – purchasing@stpetebeach.org

II. STATEMENT OF WORK AND TECHNICAL SPECIFICATIONS

See attached Technical Specifications Word document.

III. BID FORM

See attached Bid Form Excel document.

IV. GENERAL CONTRACT TERMS

REQUEST FOR PROPOSALS
Wastewater System Rehabilitation Services

REQUEST FOR PROPOSAL SUMMARY
The City of St Pete Beach has issued this Request for Proposal (RFP) to solicit competitive bids and proposals from Proposers for Wastewater System Rehabilitation Services, including manhole rehabilitation, pipe lining and point repairs.

The successful bidder shall provide all labor, materials, equipment, tools, consumables, transportation, and incidentals to provide Public Services capital improvement projects construction services on an 'as needed' basis for the City of St Pete Beach.

The "City" intends to **award multiple contracts** to vendors who can provide the best value for services. Vendors may submit proposals for all, some, or only one of the categories. **It is not mandatory to submit a proposal for every item listed**. A bidder may bid on any, all, or none of the items. The "City" reserves the right to select multiple vendors to optimize cost-efficiency and capability across different segments of the project. Proposals will be evaluated based on capability, cost, and capacity to perform the specific line items requested.

PROPOSAL SUBMITTALS
Proposal documents must include a signed/notarized Contractor's Proposal Submittal, Bid Form, References, Contractor's license and insurance certificates, and Public Entity Criminal Affidavit. The Contractor shall submit electronic proposals only. Bidders must submit electronically only through Bonfire platform. When bidding electronically, only one copy should be submitted.

Proposals shall include the following:

- A signed and notarized Proposer's Contract Proposal.
- Current proof of insurance certificate.
- A list of references and minimum qualifications as outlined in Section V.
- One copy of bid electronically submitted to Bonfire platform.

The City is not responsible for any Addendums or other supplementary information that is not received due to non-submittal of the aforementioned information. Please refer back to the city website (http://www.stpetebeach.org/news-and-links/city-projects.html) for additional project information as it becomes available. The City reserves the right to decide whether to answer addendums or not. The City is not required to provide any additional information.

Proposers or persons wishing to submit a proposal on this project shall be licensed, and insured in accordance with the City's requirements

The City of St. Pete Beach reserves the right to reject any or all proposals or parts of proposals, or accept any proposal or part thereof deemed to be in the best interests to the City of St. Pete Beach.

Electronic proposals must be submitted by **9:00 AM on April 08, 2026 (Deadline),** clearly marked as: **"Wastewater System Rehabilitation Services."**

PRE-PROPOSAL MEETING
An optional pre-proposal meeting will be held on **March 18, 2026 at 11:00 AM EST** via Microsoft Teams conference/Teleconference. Please contact the City's Procurement Manager (purchasing@stpetebeach.org) for a meeting invitation and instructions.

WRITTEN REQUESTS FOR INTERPRETATIONS/CLARIFICATIONS
No oral interpretations will be made to any firms as to the meaning of the scope of work or any other contract documents included in this **RFP.** All questions pertaining to the terms and conditions or scope of work of this Request for Proposal **(RFP)** must be sent in writing via email only to the City Procurement Manager (purchasing@stpetebeach.org) and shall be received no later than **10:00 AM EST on March 25, 2026.** Responses to questions may be handled as an Addendum if the response would provide clarification to the requirements of the **RFP**. All such Addenda shall become a part of the contract documents. The City will not be responsible for any other explanation or interpretation of the proposed **RFP** made or given prior to the award of the contract. The City will not respond to questions received after the specified deadline. The City reserves the right to respond to any and all questions but is not required to do so. If the Proposer discovered the opportunity through the online platform (Bonfire), do not submit questions through these platforms. **Only questions emailed directly to the City Procurement Manager will be answered.**

BEGINNING DATE
The Proposer shall, within ten (10) business days after receipt of the Notice of Award and before commencement of any operations hereunder, execute the Agreement. Additionally, the Proposer shall, within twenty (20) business days after receipt of the Notice of Award, provide all required documentation to the City.

COMPLETION OF WORK
The work will be completed on an as-needed basis. Each location that needs to be surveyed, repaired and/or worked on will constitute it's own "job". This will be a three (3) year initial contract with the option to be extended for two (2) additional one (1) year periods upon mutual consent of both parties. It is the intent of the City of St Pete Beach to award these services to more than one Contractor/Vendor.

COSTS INCURRED BY PROPOSERS
All expenses involved with the preparation and submission of proposals to the City, or any work performed in connection therewith, shall be borne solely by the Proposers. No payment will be made for any responses received or for any other effort required of or made by; the Proposer's prior to contract commencement.

ORAL PRESENTATION
The City may require an oral presentation of the proposal at the Evaluation Committee's discretion. This could also include a formal interview of any and all members of the Proposer's contract management staff.

CONFLICT OF INTEREST
The Proposer represents that it presently has no interest and shall acquire no interest, either direct or indirect, which would conflict in any manner with the performance or services required hereunder, as provided for in FL Stat. 112.311. The Proposer further represents that no person having any interest shall be employed for said performance.

The Proposer shall promptly notify the City's representative, in writing, by certified mail, of all potential conflicts of interest for any prospective business association, interest, or other circumstance, which may influence or appear to influence the contractor's judgment or quality of services being provided hereunder. Such written notification shall identify the prospective business association, interest or circumstance, the nature of work that the Proposer may undertake and request an opinion of the city as to whether the association, interest or circumstance would, in the opinion of the City, constitute a conflict of interest if entered into by the Proposer. The City agrees to notify the Proposer of its opinion by certified mail within thirty days of receipt of notification by the Proposer.

LATE PROPOSAL OR MODIFICATIONS
Modifications in writing received prior to the time set for the proposal submittal will be accepted. Proposal modifications received after the time set for the proposal submittal will not be considered.

RELATED PARTIES AND MULTIPLE PROPOSALS
Where two (2) or more related parties each submit a proposal or multiple proposals are received from (1) Proposer, for any such contract, such proposals shall be judged non-responsive. Related parties mean Proposers or the principles thereof, which have a direct or indirect ownership interest in another Proposer for the same contract or in which a parent company or the principles thereof where one (1) Proposer has a direct ownership interest in another Proposer for the same contract.

RIGHT TO AUDIT
The City of St. Pete Beach reserves the privilege of auditing a Proposer's record as such records relate to purchases or work between the City and said Proposer. Records should be maintained for three years from contract date.

VARIANCE FROM STANDARD TERMS & CONDITIONS
All standard terms and conditions stated throughout the RFP apply to this contract except as specifically stated. This should be fully understood by Proposers prior to submitting a proposal.

ASSIGNMENT
The Proposer shall perform this contract. No assignment or subcontracting shall be allowed without prior written consent of the City. If a Proposer intends to subcontract a portion of this work, the Proposer must disclose that intent in the proposal. In the event of a corporate acquisition and/or merger, the Contractor shall provide written notice to the City within thirty (30) business days of Proposer's notice of such action or upon the occurrence of said action, whichever occurs first. The right to terminate this contract, which shall not be unreasonably exercised by the City shall include but not be limited to, instances in which a corporate acquisition and/or merger represent a conflict of interest or are contrary to any local, state, or federal laws. Action by the City awarding a proposal to a firm that has disclosed its intent to assign or subcontract in its response to the RFP, without exception shall constitute approval for purpose of this Agreement.

LOBBYING Lobbying of Evaluation Committee members, City employees, or elected officials regarding request for proposals, request for qualifications, bids or contracts, during the pendency of bid award or bid protest, by the bidder/proposer/protestor or any member of the bidder's/proposer's/protestor's staff, an agent of the bidder/proposer/protestor, or any person employed by any legal entity affiliated with representing an organization that is responding to the request for proposal, request for qualification, bid or contract, or has a pending bid protest is strictly prohibited either upon advertisement or on a date established by the City and shall be prohibited until either an award is final or the protest is finally resolved by the City Manager or Procurement Manager; provided, however, nothing herein shall prohibit a prospective bidder/proposer from contacting City departments to address situations such as clarification and/or questions related to the procurement process. For purposes of this provision, lobbying activities shall include but not be limited to, influencing or attempting to influence action or non-action in connection with any requests for proposal, request for qualification, bid or contract through direct or indirect oral or written communication or an attempt to obtain goodwill of persons and/or entities specified in this provision. Such actions may cause any request for proposal, request for qualification, bid or contract to be rejected.

ADDITIONAL REQUIREMENTS
The City reserves the right, by change order, to unilaterally add or delete locations/services, either collectively or individually, at the City's sole option, at any time after award has been made as may be deemed necessary or in the best interest of the City. In such case, the Proposer will be required to provide or reduce services to this contract in accordance with the terms, conditions, and specifications.

SERVICES AGREEMENT
A written agreement incorporating the RFP and the successful proposal will be prepared by the City, signed by the successful Proposer, and presented to the City Commission for approval and signature.

INTEGRITY OF REQUEST FOR PROPOSAL DOCUMENTS
Proposers shall use the original RFP forms provided within the RFP and enter information in the spaces where a response is requested. Proposers may use an attachment as an addendum to the RFP forms if sufficient space is not available on the original form for the Proposer to enter a complete response. Any modifications or alterations to the original RFP documents by the Proposer, whether intentional or otherwise, will constitute grounds for rejection of the RFP. Any such modifications or alterations a Proposer wishes to propose must clearly be stated in the Proposer's RFP response and presented in the form of an addendum to the original RFP documents.

RESPONSIBILITY OF THE CITY MANAGER OR DESIGNEE
The term "City Manager or designee" wherever used in this Contract shall be the City of St. Pete Beach or its duly authorized representative. Notices of any change in the City Manager or designee shall be given in writing by the City to the Contractor. The City Manager or designee shall have full authority to interpret the contract and requirements and shall determine acceptance of the work under this Contract and every question relative to the fulfillment of the terms and provisions therein. It shall be the duty of the City Manager or designee to enforce the contract terms in a fair and unbiased manner.
If a variation from any requirements is allowed, the City Manager or designee shall grant the same in writing with the reasons for his action outlined, and such action will not invalidate or change the Contract in any other manner.

EXAMINATION OF SITE
Proposer shall carefully examine project site and be familiar with the work required for the project, investigate all site conditions that may affect execution of work as detailed in the construction documents. Contact the City's Procurement Manager or their designee for changes or alterations before proceeding.

ASSURANCES
The responding Proposer shall provide a statement of assurance that the Proposer is not presently in violation of any statutes or regulatory rules that might have an impact on the firm's operations. All applicable laws and regulations of the State of Florida, and ordinances and regulations of the City of St. Pete Beach will apply.

ASSIGNMENT AND TRANSFER OF CONTRACT
The Proposer shall not assign or transfer this Agreement or any part thereof or any interest therein without consent in writing of the City and the Proposer's Surety, and any such assignment or transfer without such written consent shall be null and void.

SUBCONTRACTS
The Proposer shall not subcontract this Agreement or any part thereof or any interest therein without consent in writing of the City and the Proposer's Surety. Any Subcontractor approved by the City will be subject to the same standards and qualifications as stated in this Contract.

PAYMENT
Payment shall be made to the Proposer for work performed under this Contract for the quantities of work as determined in accordance with Payments for Work Completed and Payments Withheld of this Contract. Payment for extra work will be made in accordance with the Changes in Work, Contract Amount, and Contract Time sections below.

PERIOD OF PERFORMANCE
The target completion for the base Scope of Services is January 2027, corresponding to delivery of the Design-Build Readiness Package. The City reserves the right, at its sole discretion and subject to funding

availability, to amend this Agreement to extend the Consultant's services through final (100%) design. Any additional services shall be authorized by written amendment and negotiated in accordance with the Consultants' Competitive Negotiation Act (Section 287.055, Florida Statutes).

CHANGES IN THE WORK

Without invalidating the Contract, the City may, at any time or from time to time, order additions, deletions or revisions in the work authorized by written Change Orders or directives. Upon receipt of a Change Order, the Proposer will proceed with the work involved. All such work shall be executed under the applicable conditions of the Contract documents. If any Change Order causes an increase or decrease in the Contract Amount or any extension or shortening of the Contract Time, an equitable adjustment will be made.

Additional Work performed by the Proposer without authorization of a Change Order will not entitle them to an increase in the Contract Amount or any extension of the Contract Time, except in the case of an emergency (subject to approval by City Manager or designee).

It is the Proposer's responsibility to notify their Surety of any changes affecting the general scope of the Work or change of the Contract Amount and the amount of the applicable bonds shall be adjusted accordingly, and an amended bond document furnished to the City. In the event the City directs the Proposer to make a change in the Work, and if the City and the Proposer do not arrive at a mutually acceptable increase or decrease in the Contract Amount, the Proposer shall not use any such lack of mutual acceptance as a basis or cause to stop or otherwise delay the progress or the execution and completion of any of the work ordered, directed or required pursuant to the Contract Documents.

If the Proposer believes an event or situation has occurred which justifies a change in the Contract Amount or Contract Time, they shall deliver a written notice to the City Manager or designee. Each such written notice shall be delivered promptly and no later than fifteen (15) business days after the Proposer first discovered the occurrence. The Proposer shall be deemed to have waived the right to collect any and all costs incurred more than fifteen (15) business days prior to the date of delivery of the written notice and shall be deemed to have waived the right to seek an extension of the Contract Time with respect to any delay in the Progress Schedule which accrued more than fifteen (15) business days prior to the date of delivery of the written notice.

Any such notice shall include sufficient detail to explain the basis of entitlement to a claim for an adjustment to the Contract Amount of Contract Time. When requested by the City Manager or designee, the Proposer shall furnish any additional information and details as may be required to determine the facts or allegations involved, which shall be provided within fifteen (15) business days of the request unless a longer time period is allowed by the City Manager or designee.

The Proposer shall prepare proposals detailing proposed adjustments to Contract Amount and/or Contract Time and submit them to the City Manager or designee within fifteen (15) business days of the City's issuance of a proposed Change Order or the Proposer's submitting a written notice of a change or claim for an adjustment to the Contract Amount or Contract Time. Proposer's proposals shall be irrevocable for a period of at least sixty (60) business days after receipt by the City. Any delay in the submittal of a complete, adequate and acceptable proposal will not justify an increase in Contract Amount or Contract Time. Proposer agrees that it shall give the City access to any and all of Proposer's and Subcontractors' books, records and other materials relating to proposed Change Orders and other claims for adjustment to Contract Amount or Contract Time.

CHANGE OF CONTRACT AMOUNT

The Contract Amount constitutes the total compensation payable to the Proposer for performing the Work. All duties, responsibilities and obligations assigned to or undertaken by the Proposer shall be at his expense

without change in the Contract Amount. The Contract Amount may only be changed by written Change Order issued by the City. Any claim for an increase in the Contract Amount shall be in writing and delivered to the City Manager or designee within fifteen (15) business days of the occurrence of the event giving rise to the claim.

All claims for adjustment in the Contract Amount shall be determined by the City Manager or designee. However, no claim for an adjustment to the Contract Amount will be considered for unforeseeable causes that were beyond the fault or negligence of the Proposer or his Subcontractors or supplier such as acts of God, floods, riots, etc. This restriction does not restrict submission of claims for additional Contract Time due to events of this nature. Any change in the Contract Amount shall be incorporated in a Change Order.

Proposer proposals or claims shall cover all aspects of the Work involved and shall be fully documented and itemized as to all costs, quantities and charges for overhead and profit. Amounts for Subcontractors or Suppliers at any tier shall be similarly supported. When determining Subcontractors' costs, the methods to be used shall be those used for the Proposer's costs, except that the term "Subcontractor" shall replace the term "Proposer," context permitting.

The value of any Work covered by a Change Order or of any claim for an increase or decrease in the Contract Amount where the Work involved is covered by unit prices contained in the Contract Documents shall be determined by application of unit prices to the quantities of the items involved. If the quantities originally contemplated are so changed in a proposed Change Order, that application of the Unit Prices to the quantities proposed will cause substantial inequity to the City or the Proposer, the applicable unit price(s) shall be equitably adjusted by mutual agreement.

If the value of work covered by a Change Order cannot be established or mutually agreed to utilizing previously established unit rates, the value shall be determined by the City on the basis of an estimate of the out-of-pocket cost and percentages that are acceptable to the City for overhead and profit.

In such case, the Proposer will submit in the form prescribed by the City an itemized cost breakdown together with supporting data.

The amount of credit to be allowed by the Proposer to the City for any such change which results in a net decrease in cost, will be the amount of the actual net decrease as determined by the City. When both additions and credits are involved in any one change, the combined overhead and profit shall be figured on the basis of the net increase, if any.

CHANGE OF CONTRACT TIME

The Contract Time may only be changed by written Change Order. Any claim for an extension in the Contract Time shall be in writing and include an analysis of the Progress Schedule as further described in the Specifications and shall be delivered to the City Manager or designee within fifteen (15) business days of the occurrence of the event giving rise to the claim. All claims for adjustment in the Contract Time shall be determined by the City Manager or designee. Any change in the Contract Time resulting from any such claim shall be incorporated in a Change Order. The Contract Time may be extended for an amount equal to time lost due to unforeseeable causes beyond the control of the Proposer (and his Subcontractors and Suppliers) if he makes a claim therefrom. Such delays shall include, but not be restricted to, acts or neglect by any separate Proposer employed by the City; fires; floods; labor disputes; epidemics; or acts of God.

All time limits stated in the Contract Documents are of the essence to the Contract. The stated time limits are agreed to be adequate to complete the work, including the procurement, manufacture and delivery of all material and equipment required, and account for any and all potential impact, delays, disruptions and costs that may be expected.

PAYMENTS FOR WORK COMPLETED
All payments under this agreement shall comply with the requirements of Florida Statutes, Section 215.422, commonly referred to as the "Prompt Payment Law." This includes timely processing of invoices and adherence to statutory interest provisions for late payments. The Contractor shall submit detailed invoices for services rendered under this agreement. Each invoice must include: Purchase Order or Contract Number, Description of services provided, Dates of service, Total amount due. Payment will be made within 45 days of receipt of a proper invoice and acceptance of deliverables, as required by Florida law. If payment is not made within the statutory timeframe, interest penalties will apply in accordance with Section 215.422, Florida Statutes. Payments will be issued via electronic funds transfer (EFT) unless otherwise agreed in writing. Contractor must provide accurate banking information to facilitate EFT.

PAYMENTS WITHHELD
The City Manager or designee may withhold, or, on account of subsequently discovered evidence, nullify the whole or part of any estimate to such extent as may be necessary to protect the City from loss on account of:

a) Defective work not remedied

b) Claims and/or liens filed or reasonable evidence indicating probable filing of claims

c) Failure of the Proposer to make payments properly to Subcontractors or for labor

d) A reasonable doubt that the Contract can be completed for the balance then unpaid

e) Damage to another Proposer

f) Failure of the Proposer to keep their work progressing in accordance with their time schedule

FINAL PAYMENTS
Upon the completion and acceptance of the work, the City Manager or designee shall issue a certificate that designates that the whole work provided for in this Contract has been completed and accepted by him under the conditions and the terms thereof and shall make the final estimate of the work. After issuance of the certificate, the entire balance found to be due the Proposer, including said retained percentage by the City in accordance with existing state laws as may be retained lawfully by said City, shall pay excepting such sums to the Proposer.

Before the approval of the final payment, the Proposer shall submit evidence satisfactory to the City that states that all payrolls, materials, bills and outstanding indebtedness in connection with this Contract have been paid.

LIENS
If at any time there shall be evidence of any lien or claim for which the City might become liable and which is chargeable to the Proposer, the City shall have the right to retain out of any payment then due or thereafter to become due, an amount sufficient for complete indemnification against such lien or claim. In the event the City has already paid to the Proposer all sums due under this contract or the balance remaining unpaid is insufficient to protect the City, the Proposer and his Surety shall be liable to the City for any loss so sustained.

RESPONSIBILITY OF THE CITY MANAGER OR DESIGNEE
The term "City Manager or designee" wherever used in the Contract shall be the City of St. Pete Beach or its duly authorized representative. Notices of any change in the City Manager or designee shall be given in writing by the City to the Proposer. The City Manager or designee shall have full authority to interpret the Plans and Specifications and shall determine the amount, quality, and acceptance of the work and supplies

to be paid for under the Contract and every question relative to the fulfillment of the terms and provisions therein. It shall be the duty of the City Manager or designee to enforce the Plans and Specifications in a fair and unbiased manner. If a variation from any requirements is allowed the City Manager or designee shall grant the same in writing with the reasons for his action outlined, and such action will not invalidate or change the Contract in any other manner.

LICENSES AND PERMITS

The Proposer shall obtain and pay for all necessary City licenses and work permits and shall faithfully comply with all laws, ordinances and regulations, (Federal, State or local) which may be applicable to the operations to be conducted hereunder, except for those permits obtained by the City. Notwithstanding the provisions above, the Proposer is responsible for non-compliance of all permit requirements, including all fines resulting from Proposer's non-compliance of said requirements.

Chapter II, Section II-4, "Registration of Licenses Obtained From Other Municipalities:" "Persons, partnerships, corporations, or other business entities doing business with the City who are not required to obtain a City occupational license, but who must have either a State or County or Municipal occupational license from another municipality, shall register such occupational license with St. Pete Beach Community Development Department. The City may charge a fee for such registration." The Proposer shall be responsible for obtaining all City, County, State and Federal permits required by those government agencies and must provide documentation of receipt of those permits prior to project commencement. This shall include a notice to commence work letter and the applicable fee, if required. Any sub-contractor hired by the Proposer awarded the project, MUST also register their license with the City.

LABOR PROVISIONS

The Proposer and his Subcontractors shall discharge, whenever ordered to do so by the City Manager or designee, any employee who is disorderly or whose conduct in the opinion of the City Manager or designee is detrimental to the prosecution of the work. No person whose age or physical condition is such as to make this employment dangerous to his/her health and safety or to the health and safety of others shall be employed on the work, and in no event shall any persons under the age of sixteen (16) years be employed. The State of Florida prevailing wage law requires that the Proposer shall fully comply with all provisions contained in Section 215.19, "Schedule of Prevailing Wage Rates for Specified Public Construction." The wage rates set forth by such determination shall apply to this project.

INSURANCE

The Proposer shall procure and maintain at his/her own expense, during the life of the Contract, liability insurance as hereinafter specified. All such insurance shall be subject to the approval of the City for adequacy of protection and shall include a provision preventing cancellation without twenty (20) business days prior notice to the City in writing. The City shall be included as an additional insured on all liability insurance. The liability insurance required is as follows: Proposer's General Public Liability and Property Damage Insurance issued to the Proposer and protecting the Proposer from all claims for personal injury, including death, and all claims for destruction of or damage to property, arising out of or in connection with any operations under this Contract, whether such operations be by the Proposer or by any Subcontractor hired by the Proposer or anyone directly or indirectly employed by the Proposer or hired by the Proposer.

The successful Proposer shall supply and maintain insurance which defends, indemnifies and holds harmless the City of St. Pete Beach, its officers, employees and agents from and against any and all liability, damage claims, demands, costs, judgments, fees, attorney's fees or loss arising directly out of acts or omissions hereunder by the Proposer or third party under the direction or control of the Proposer. Such general and excess liability coverage shall be primary to any other coverage carried by the City of St Pete Beach. Proposer must furnish the City with Certificate of Insurance prior to commencement of work. An

approved Certificate of Insurance furnished by the Proposer's carrier to guarantee the Proposer being insured with the City of St Pete Beach must be named as a certificate holder for this contract. The following minimum coverage:

- Professional Liability Insurance $2,000,000 each occurrence.
- Commercial General Liability Insurance $1,000,000.00.
- Comprehensive General Liability Insurance of $1,000,000.00 each occurrence.
- Personal Injury for $1,000,000.00 each occurrence.
- Automobile Liability $1,000,000.00.
- General Workers Compensation Insurance as required by Florida law.
- Longshore Harbor Workers Compensation Insurance

PROTECTION OF WORK AND PROPERTY
The Proposer shall continuously maintain adequate protection of all their work and materials from damage or theft and shall protect the City's property and all adjacent property from injury or loss arising in connection with activities under their Contract. The Proposer shall make good any such damage, injury, or loss, except such as may be caused by agents or employees of the City.

The Proposer shall take, use, provide, and maintain all necessary precautions, safeguards, and protection to prevent accidents, or injury to persons or property on, about, or adjacent to the site of the work. Should the situation arise that physical security is needed the Proposer will provide security on off days and holidays. The Proposer shall be responsible for all charges incurred with such action.

The Proposer shall post danger signs warning against any hazards created by the work being done under their Contract. They shall designate a responsible member of their organization on the work, whose duty shall be the prevention of accidents, and the name of the person so designated shall be reported to the City Manager or designee and City in writing. In an emergency affecting the safety of life, or of the work or adjoining property, the Proposer, without special instruction or authorization from the City Manager or designee, or City, is hereby permitted to act, at their own discretion, to prevent such threatened loss or injury, and they must take such action if so instructed or authorized by the City Manager or designee. The Proposer shall also protect adjacent property as required by law.

PROPOSAL REVIEW AND CONTRACT AWARD
Failure to submit all documents requested at the time of proposal may deem the Proposer's proposal ineligible for award. The City of St. Pete Beach reserves the right to reject any or all proposals or parts of proposals. The contract shall be awarded by written notice to the responsible and responsive Contractor whose proposal is determined in writing to be the most advantageous to the City, taking into consideration the price and other criteria set forth in this request for proposals. The City may waive any informality.

LOCAL, STATE AND FEDERAL COMPLAINCE REQUIREMENTS
The laws of the State of Florida do apply to any purchase made under this Request for Proposal. Proposers shall comply with all local, state, and federal directives, orders and laws as applicable to their proposal and subsequent contracts include but not limited to Equal Employment Opportunity, Minority Business Enterprise, and OSHA as applicable to this contract.

Compliance with Fla. Stat. 448.095:

- Proposer agrees to comply with all applicable portions of Fla. Stat. 448.095. Proposer must use the

U.S. Department of Homeland Security's E-Verify System, hhtps://e-verify.uscis.gov/emp, to verify the employment eligibility of all employees hired on or after January 1, 2021 during the term of this Agreement.

- Subcontractors (i) Proposer shall also require all subcontractors performing work under this Agreement to use the E-Verify system for any employees they may hire during the term of this Agreement. (ii) Subcontractors shall provide Proposer with an affidavit stating the subcontractor does not employ, contract with, or subcontract with an unauthorized alien, as defined by Fla. Stat. 448.095 (iii) Proposer shall provide a copy of such affidavit to the City upon receipt and shall maintain a copy for the duration of the Agreement.

- Proposer must provide evidence of compliance with Fla. Stat. 448.05 by January 1, 2021. Evidence may consist of, but is not limited to, providing notice of Proposer's E-Verify number.

- Failure to comply with this provision is a material breach of the Agreement, and the City may choose to terminate the Agreement at its sole discretion. Proposer may be liable for all costs associated with the City securing the same services, inclusive, but not limited to, higher costs for the same services and proposal costs (if necessary). Any challenge to termination under this provision must be filed in the Circuit Court no later than 20 calendar days after the date of termination. If this agreement is terminated for a violation of the statute by the Proposer, the Proposer may not be awarded a public agreement for a period of 1 year after date of termination.

RESERVES THE RIGHT

The City reserves the right to accept or reject any and/or all proposals, to waive irregularities and technicalities, and to request re-submission. If only one proposal is received by the proposal date and time listed, the proposal may or may not be rejected by the City depending upon proposal review and the needs of the City.

The City reserves the right to select a firm with or without additional interviews and may decide to select any of the firms submitting proposals. The City reserves the right to award the contract to a responsible proposer submitting a responsible proposal, with a resulting negotiated agreement which is most advantageous and in the best interest of the City.

Proposers, Proposers, their agents, and associates shall not contact or solicit any City Commission member, City employee, or official regarding this RFP during any phase of the proposalding process. Failure to comply with the provision may result in disqualification of the Proposer, at the option of the City. Only that individual listed, or an approved designee, as the contact person for this RFP shall be contacted.

SUBMITTAL WITHDRAWAL

After submittals are opened, corrections or modifications to submittals are not permitted, but a responding firm may be permitted to withdraw an erroneous submittal prior to the award by the City Commission, if the following is established:

- That the responding firm acted in good faith in submitting the submittal;
- That in preparing the submittal there was an error of such magnitude that enforcement of the submittal would work severe hardship upon the respondent;
- That the error was not the result of gross negligence or willful inattention on the part of the respondent;
- That the error was discovered and communicated to the City within twenty-four (24) hours of submittal opening, along with a request for permission to withdraw the submittal; or
- The responding firm submits documentation and an explanation of how the error was made.

CONE OF SILENCE
Respondents to this solicitation or persons acting on their behalf may not contact, between the release of the solicitation and the end of the 72-hour period following the agency posting the notice of intended award, excluding Saturdays, Sundays, and state holidays, any employee or officer of the executive or legislative branch concerning any aspect of this solicitation, except in writing to the procurement officer or as provided in the solicitation documents. Violation of this provision may be grounds for rejecting a response.

TERMINATION
The resulting contract may be canceled by the City when:

- Sufficient funds are not available to continue its full and faithful performance of this contract.
- There is sub-standard or non-performance of contract.
- The City wishes to terminate at any time and for any reason, upon giving thirty (30) days prior written notice to the other party.

The resulting contract may be canceled by either party in the event of substantial failure to perform in accordance with the terms by the other party through no fault of the terminating party.

FISCAL NON-FUNDING

If funds for the requested services described herein are not appropriated via the annual budget adoption process, the City reserves the right to cancel this Agreement immediately upon written notice to the vendor.

PROJECT RECORDS
The awarded firm shall maintain auditable records concerning the procurement to account for all receipts and expenditures, and to document compliance with the Contract. These records shall be kept in accordance with generally accepted accounting methods, and the City of St. Pete Beach reserves the right to determine the record-keeping method in the event of non-conformity. These records shall be maintained for three (3) years after final payment has been made and shall be readily available to City personnel with reasonable notice, and to other persons in accordance with the Florida Public Disclosure Statutes. Additionally, the awarded firm shall abide by and comply with Florida Statutes regarding public records. Specifically, the firm shall be aware of the provisions found in Section 119.0701, Florida Statutes.

Upon completion of the project, all reports, studies, recommendations, forms, and other project specific information will need to be submitted in paper and in an electronic file format (.PDF, .JPEG) on CD or USB storage device.

V. REFERENCES & MINIMUM QUALIFICATIONS

Provide at least three (3) or more professional, business references with which you have contracted to provide similar services in the past five (5) years. Include the name of the person, its organization, telephone number, fax number, and e-mail address. Include any governmental agencies, with the same contact and descriptive information for which you have provided similar service within the past five (5) years.

Provide a brief description of the history and capabilities of the firm. Describe the types of projects or services the firm performs/has performed and the dollar value of each. Provide information regarding your firm's ability to complete this project. Demonstrate that the firm's personnel have experience with similar projects.

Identify all unresolved and ongoing claims and disputes against your firm in excess of $500,000. Include any claims against the principals of your firm or any claims your company may have against a third party. Provide a history of litigation, including the outcomes, for the past five (5) years.

The responding firm shall provide a statement of assurance that the firm is not presently in violations of any statutes or regulatory rules that might have an impact on the firm's operations. All applicable laws and regulations of the State of Florida and ordinances and regulations of the City of St. Pete Beach will apply.

Provide the overall bonding capacity for the company and provide a history of any claims against the Proposer's previous bonds for the past five (5) years.

The City shall be the sole final judge of qualifications of Proposer to perform service and reserves the exclusive right to accept or reject any proposal as it deems to be in the best interests of the City. The City reserves the right to make such investigation, as it deems necessary, to determine the ability of any proposer to perform the work or service requested. Failure to comply with the requirements of this section may be grounds for rejecting a response.

VI. CONTRACTOR'S PROPOSAL SUBMITTAL

The company that is submitting a proposal declares that it has extensive experience in Wastewater System Rehabilitation Services, including manhole rehabilitation, pipe lining and point repairs.

The undersigned, as Proposer, hereby declares that the only person or persons interested in the Proposal as principal or principals are named herein, and that no person other than herein mentioned has any interest in the Proposal or in the Agreement to be entered into; that this Proposal or Agreement is made without connection with any other person, company, or parties making a Proposal; and that it is in all respects fair and in good faith without collusion or fraud.

The Proposer further declares that they have examined the site of the work and informed themselves fully in regard to all conditions pertaining to the place where the work is to be done; that they have examined the Plans and Specifications for the work and Contract Documents relative thereto, and have read all special provisions furnished prior to the opening of proposals; and that they have satisfied themselves relative to the materials to be supplied and work to be performed.

The Proposer proposes and agrees, if the Proposal is accepted, to contract with the City of St. Pete Beach, Florida, in the form of an Agreement specified for **"Wastewater System Rehabilitation Services"** in St. Pete Beach, Florida, in full and complete accordance with the shown, noted, described, and reasonably intended requirements of the Plans, Specifications, and Contract Documents, to the full and entire satisfaction of the City of St. Pete Beach, Florida.

The successful Proposer shall be required to utilize the template Agreement in this Request for Proposals (RFP) and any questions regarding the Agreement must be addressed during the RFP process before submittal. The City reserves the right to respond or not respond to questions in the form of an addendum.

The Proposer proposes to furnish all materials, equipment, labor, and perform the work submitted in their proposal schedule for the City of St. Pete Beach **"Wastewater System Rehabilitation Services."**

COMPANY: RCM Utilities, LLC DATE: 04/07/2026

ADDRESS: 1451 Pine Grove Road Eustis, FL 32726 PHONE: 352-561-2990

PROPOSER: F. Allen Bates III NAME: Francis A Bates III - VP

(SIGNATURE) (PRINT NAME & TITLE)

STATE OF FLORIDA
COUNTY OF Lake

The foregoing instrument was sworn to (or affirmed), subscribed, and acknowledged before me by means of ☒ physical presence or ☐ online notarization, this 7th day of April, 2026, by Francis A Bates III, who is personally known to me or has produced Drivers License as identification.

(SEAL)

Notary Public State of Florida
Virginia Lynn Penley Foley
My Commission HH 678857
Expires 5/22/2029

Virginia Lynn Penley Foley
Notary Public – State of Florida

Virginia Lynn Penley Foley
(Print, Type, Stamp, or Commissioned Name of Notary Public)

SUBMIT PROPOSAL TO: Electronically via Bonfire only

VII. PUBLIC ENTITY CRIMINAL AFFIDAVIT

SWORN STATEMENT – PUBLIC ENTITY CRIMES

PURSUANT TO § 287.133 (3)(a), FLORIDA STATUTES, ON PUBLIC ENTITY CRIMES
THE FORM MUST BE SIGNED AND SWORN TO IN THE PRESENCE OF A NOTARY PUBLIC OR OTHER OFFICIAL AUTHORIZED TO ADMINISTER OATHS.

1. This sworn statement is submitted to: City of St. Pete Beach

by: Francis Allen Bates III - VP
(Print individual's name and title)

for: RCM Utilities, LLC
(Print name of entity submitting sworn statement)

at: 1451 Pine Grove Road Eustis, FL 32726
(Business address)

and (if applicable), its Federal Employer Identification Number (FEIN):

82-4160762
(FEIN)
or, if the entity has no FEIN, include the Social Security Number:

(SSN)

by the individual signing this sworn statement: F. Allen Bates III
(Signature)

2. I understand that a "public entity crime" as defined in § 287.133 (1)(g), Fla. Stat., means a violation of any State or Federal law by a person with respect to and directly related to the transaction of business with any public entity or with an agency or political subdivision of any other state or of the United States including, but not limited to, any proposal or contract for goods or services, any lease for real property, or any contract for the construction or repair of a public building or public work, involving antitrust, fraud, theft, bribery, collusion, racketeering, conspiracy, or material misrepresentation.

3. I understand that "convicted" or "conviction" as defined in § 287.133 (1)(b), Fla. Stat., means a finding of guilt or a conviction of public entity crime with or without an adjudication of guilt in any Federal or State trial court of record relating to charges brought by indictment or information after July 1, 1989, as a result of a jury verdict, non-jury trial, or entry of a plea of guilty or nolo contendere.

4. I understand that an "affiliate" as defined in § 287.133 (1)(a), Fla. Stat., means:
   a. A predecessor or successor of a person convicted of a public entity crime or
   b. An entity under the control of any natural person who is active in the management of the entity and who has been convicted of a public entity crime. The term "affiliate" includes those officers, directors, executives, partners, shareholders, employees, members, and agents who are active in the management of an affiliate. The ownership by one (1) person of shares constituting a controlling interest in another person or a pooling of equipment or income among persons when not for fair market value under the arm's length agreement, shall be a prima facie case that one (1) person controls another person. A person who knowingly enters into a joint venture with a person who has been convicted of a public crime in Florida during the preceding thirty-six (36) months shall be considered an

affiliate.

5. I understand that a "person" as defined in Section 287.133 (1)(e), Fla. Stat., means any natural person or any entity organized under the laws of any state or of the United States with the legal power to enter into a binding contract and which proposals or applies to proposal on contracts let by a public entity, or which otherwise transacts or applies to transact business with a public entity. The term "person" includes those officers, directors, executives, partners, shareholders, employees, members, and agents who are active in management of an entity.

6. Based on information and belief, the **statement which I have marked below is true** in relation to the entity submitting this sworn statement (indicate which statement applies).

☒ Neither the entity submitting this sworn statement, nor any of its officers, directors, executives, partners, shareholders, employees, members, or agents who are active in the management of the entity nor any affiliate of the entity has been charged with and convicted of a public entity crime subsequent to July 1, 1989.

☐ The entity submitting this sworn statement or one (1) or more of its officers, directors, executives, partners, shareholders, employees, members, or agents who are active in the management of the entity or an affiliate of the entity has been charged with and convicted of a public entity crime subsequent to July 1, 1989.

☐ The entity submitting this sworn statement or one (1) or more of its officers, directors, executives, partners, shareholders, employees, members, or agents who are active in the management of the entity or an affiliate of the entity has been charged with and convicted of a public entity crime subsequent to July 1, 1989. However, there has been a subsequent proceeding before a Hearing Office of the State of Florida, Division of Administrative Hearings and the Final Order entered by the Hearing Officer determined that it was not in the public interest to place the entity submitting this sworn statement on the convicted vendor list (attach a copy of the final order).

I UNDERSTAND THAT THE SUBMISSION OF THIS FORM TO THE CONTRACTING OFFICE FOR THE PUBLIC ENTITY IDENTIFIED IN PARAGRAPH 1 ABOVE IS FOR THE PUBLIC ENTITY ONLY AND THAT THIS FORM IS VALID THROUGH DECEMBER 31 OF THE CALENDAR YEAR IN WHICH IT IS FILED. I ALSO UNDERSTAND THAT I AM REQUIRED TO INFORM THE PUBLIC ENTITY PRIOR TO ENTERING INTO A CONTRACT IN EXCESS OF THE THRESHOLD AMOUNT PROVIDED IN SECTION 287.017, FLORIDA STATUTES, FOR CATEGORY TWO OF ANY CHANGE IN THE INFORMATION CONTAINED IN THIS FORM.

STATE OF FLORIDA
COUNTY OF Lake

The foregoing instrument was sworn to (or affirmed), subscribed, and acknowledged before me by means of ☒ physical presence or ☐ online notarization, this 7th day of April, 2026, by Francis Allen Bates III, who is personally known to me or has produced Drivers License as identification.

(SEAL)

Virginia Lynn Penley Foley
Notary Public – State of Florida

Notary Public State of Florida
Virginia Lynn Penley Foley
My Commission HH 678857
Expires 5/22/2029

Virginia Lynn Penley Foley
(Print, Type, Stamp, or Commissioned Name of Notary Public)

VIII. NON-COLLUSION AFFADAVIT

STATE OF Florida COUNTY OF Lake

I state that I Francis A Bates III - VP of RCM Utilities, LLC,
(Name and Title) (Name of Firm)

I am authorized to make this affidavit on behalf of my firm and its owner, directors and officers. I am the person responsible in my firm for the price(s) and amount(s) of this Response, and the preparation of the Response. I state that:

1. The price(s) and amount(s) of this Response have been arrived at independently and without consultation, communication or agreement with any other Provider, potential provider, Proposal, or potential Proposal.

2. Neither the price(s) nor the amount(s) of this Response, and neither the approximate price(s) nor approximate amount(s) of this Response, have been disclosed to any other firm or person who is a Provider, potential Provider, Proposal, or potential Proposal, and they will not be disclosed before Proposal opening.

3. No attempt has been made or will be made to induce any firm or persons to refrain from submitting a Response for this contract, or to submit a price(s) higher that the prices in this Response, or to submit any intentionally high or noncompetitive price(s) or other form of complementary Response.

4. The Response of my firm is made in good faith and not pursuant to any agreement or discussion with, or inducement from, any firm or person to submit a complementary or other noncompetitive Response.

5. RCM Utilities, LLC, its affiliates, subsidiaries, officers, director, and employees (Name of Firm) are not currently under investigation, by any governmental agency and have not in the last three years been convicted or found liable for any act prohibited by State or Federal law in any jurisdiction, involving conspiracy or collusion with respect to Proposal, on any public contract, except as follows:

I state that I and the named firm understand and acknowledge that the above representations are material and important, and will be relied on by the State of Florida for which this Response is submitted. I understand and my firm understands that any misstatement in this affidavit is, and shall be treated as, fraudulent concealment from the State of Florida of the true facts relating to the submission of responses for this contract.

Name of Organization: RCM Utilities, LLC Signed By: F. Allen Bates III

Print Name: Francis Allen Bates III

The foregoing instrument was sworn to (or affirmed), subscribed, and acknowledged before me by means of ☒ physical presence or ☐ online notarization, this 7th day of April, 2026, by Francis Allen Bates III, who is personally known to me or has produced Drivers License as identification.

(SEAL)

Virginia Lynn Penley Foley
Notary Public - State of Florida

Virginia Lynn Penley Foley
(Print, Type, Stamp, or Commissioned Name of Notary Public)

Notary Public State of Florida
Virginia Lynn Penley Foley
My Commission HH 678857
Expires 5/22/2029

Marion County
Board of County Commissioners

Utilities

11800 SE U.S. Highway 441
Belleview, FL 34420
Phone: 352-307-6000 (available 24/7)
Fax: 352-307-6001

June 17, 2025

Letter of Recommendation

To Whom It May Concern,

Marion County has worked with RCM Utilities on a range of stormwater and wastewater lift station projects, including routine maintenance, emergency repairs, and system upgrades. Throughout our working relationship, they have demonstrated a high level of professionalism, quality workmanship, and a strong commitment to clear communication.

Over the past two years, RCM Utilities has completed services for us such as preventative maintenance, pump and piping repairs, and troubleshooting of minor to complex issues. No matter the task, they approach each project with dependability and efficiency.

RCM Utilities has consistently proven to be a responsive and capable partner, particularly during urgent situations. Their team has shown a willingness to tackle challenging issues and provide timely solutions when they're needed most.

Marion County fully intends to continue utilizing RCM Utilities for future lift station work and related services. I am confident in their ability to meet the expectations of any client, and I highly recommend them.

Should you need any additional information, please do not hesitate to contact me.

Sincerely,

Josh Kramer, Utilities Deputy Director

cc: Victor Shahid, Assistant Director Maintenance
Chris Creech, RCM Utilities, LLC
Allen Bates, III, RCM Utilities, LLC

City of Orange City • 205 East Graves Avenue • Orange City, Florida 32763 • 386-775-5400

Building
386-775-5423

City Clerk
386-775-5403

City Manager
386-775-5408

Finance
386-775-5430

Fire
386-775-5460

Human Resources
386-775-5457

Parks & Rec.
386-775-5454

Planning
386-775-5415

Police
386-775-9999

Public Info
386-775-5410

Public Works
386-775-5471

Utilities
386-775-5444

June 13, 2025

To Whom It May Concern,

It is my pleasure to recommend the services of RCM Utilities.

The City of Orange City has had a great relationship with RCM Utilities for maintenance, repairs, and improvements to its stormwater and wastewater lift stations. RCM Utilities has always been extremely responsive, performing of quality work, and communicative. We have used RCM over the past two years for services such as lift station cleaning, lift station preventative maintenance, repairs to lift station piping, and alarm repairs amongst other projects.

RCM Utilities has always been willing to take on any challenge and respond in times of emergency. The City of Orange City has every intention to continue working with RCM Utilities for projects and addressing any lift station needs. I am confident they will be more than capable to meet any needs and give my recommendation.

Please feel free to contact me if you should require any further information.

Respectfully yours,

Robert Lawler, P.E., MPA
Utilities Services Director
rlawler@orangecityfl.gov
386-775-5450

TAVARES
America's Seaplane City℠

To Whom It May Concern, **6-16-25**

I am pleased to offer this letter of recommendation on behalf of **RCM Utilities**.

City of Tavares has worked with RCM Utilities on a range of stormwater and wastewater lift station projects, including routine maintenance, emergency repairs, and system upgrades. Throughout our working relationship, they have demonstrated a high level of professionalism, quality workmanship, and a strong commitment to clear communication.

Over the past two years, RCM Utilities has completed services for us such as lift station cleaning, preventative maintenance, pump and piping repairs, and troubleshooting of alarm systems. No matter the task, they approach each project with dependability and efficiency.

RCM Utilities has consistently proven to be a responsive and capable partner, particularly during urgent situations. Their team has shown a willingness to tackle challenging issues and provide timely solutions when they're needed most.

City of Tavares fully intends to continue utilizing RCM Utilities for future lift station work and related services. I am confident in their ability to meet the expectations of any client, and I highly recommend them.

Should you need any additional information, please do not hesitate to contact me.

Respectfully,

Robert W Kenner
Wastewater Field Operations Manager
City of Tavares

TAVARES
America's Seaplane City℠

To Whom It May Concern, **6-16-25**

I am pleased to offer this letter of recommendation on behalf of **RCM Utilities**.

City of Tavares has worked with RCM Utilities on a range of stormwater and wastewater lift station projects, including routine maintenance, emergency repairs, and system upgrades. Throughout our working relationship, they have demonstrated a high level of professionalism, quality workmanship, and a strong commitment to clear communication.

Over the past two years, RCM Utilities has completed services for us such as lift station cleaning, preventative maintenance, pump and piping repairs, and troubleshooting of alarm systems. No matter the task, they approach each project with dependability and efficiency.

RCM Utilities has consistently proven to be a responsive and capable partner, particularly during urgent situations. Their team has shown a willingness to tackle challenging issues and provide timely solutions when they're needed most.

City of Tavares fully intends to continue utilizing RCM Utilities for future lift station work and related services. I am confident in their ability to meet the expectations of any client, and I highly recommend them.

Should you need any additional information, please do not hesitate to contact me.

Respectfully,

Robert W Kenner
Wastewater Field Operations Manager
City of Tavares

Ron DeSantis, Governor

Melanie S. Griffin, Secretary

STATE OF FLORIDA
DEPARTMENT OF BUSINESS AND PROFESSIONAL REGULATION

CONSTRUCTION INDUSTRY LICENSING BOARD

THE UNDERGROUND UTILITY & EXCAVATION CO HEREIN IS CERTIFIED UNDER THE PROVISIONS OF CHAPTER 489, FLORIDA STATUTES

CREECH, CHRISTOPHER RYAN

RCM UTILITIES, LLC
1451 PINE GROVE ROAD
EUSTIS FL 32726

LICENSE NUMBER: CUC1225240

EXPIRATION DATE: AUGUST 31, 2026

Always verify licenses online at MyFloridaLicense.com

ISSUED: 08/12/2024

Do not alter this document in any form.

This is your license. It is unlawful for anyone other than the licensee to use this document.

Ron DeSantis, Governor

Melanie S. Griffin, Secretary

STATE OF FLORIDA
DEPARTMENT OF BUSINESS AND PROFESSIONAL REGULATION

CONSTRUCTION INDUSTRY LICENSING BOARD

THE GENERAL CONTRACTOR HEREIN IS CERTIFIED UNDER THE
PROVISIONS OF CHAPTER 489, FLORIDA STATUTES

STRAUB, MICHAEL JOHN

RCM UTILITIES, LLC
100 WEST MILLS AVE
EUSTIS FL 32726

LICENSE NUMBER: CGC061548

EXPIRATION DATE: AUGUST 31, 2026

Always verify licenses online at MyFloridaLicense.com

ISSUED: 08/26/2024

Do not alter this document in any form.

This is your license. It is unlawful for anyone other than the licensee to use this document.

Ron DeSantis, Governor

Melanie S. Griffin, Secretary

Florida dbpr

STATE OF FLORIDA
DEPARTMENT OF BUSINESS AND PROFESSIONAL REGULATION

CONSTRUCTION INDUSTRY LICENSING BOARD

THE PLUMBING CONTRACTOR HEREIN IS CERTIFIED UNDER THE
PROVISIONS OF CHAPTER 489, FLORIDA STATUTES

SELLERS, NICHOLAS GEORGE

RCM UTILITIES, LLC
100 W MILLS AVENUE
EUSTIS FL 32726

LICENSE NUMBER: CFC1431823

EXPIRATION DATE: AUGUST 31, 2026

Always verify licenses online at MyFloridaLicense.com

ISSUED: 07/16/2024

Do not alter this document in any form.

This is your license. It is unlawful for anyone other than the licensee to use this document.

Ron DeSantis, Governor

Melanie S. Griffin, Secretary

Florida dbpr

STATE OF FLORIDA
DEPARTMENT OF BUSINESS AND PROFESSIONAL REGULATION

ELECTRICAL CONTRACTORS' LICENSING BOARD

THE ELECTRICAL CONTRACTOR HEREIN IS CERTIFIED UNDER THE
PROVISIONS OF CHAPTER 489, FLORIDA STATUTES

LAKE, JOHN A

RCM UTILITIES, LLC
1451 PINE GROVE ROAD
EUSTIS FL 32726

LICENSE NUMBER: EC13014150

EXPIRATION DATE: AUGUST 31, 2026

Always verify licenses online at MyFloridaLicense.com

ISSUED: 08/29/2024

Do not alter this document in any form.

This is your license. It is unlawful for anyone other than the licensee to use this document.

CHRISTOPHER CREECH

EMPLOYMENT EXPERIENCE

April 2018 – Present RCM Utilities, LLC
Position: Owner - President, Estimator, General Manager

Mar 2015 – April 2018 Utility Technicians, Inc.
Position: Project Manager, Estimator, Vice President & General Manager
Duties: Estimator, supervisor, and technician for all phases of service, Expansion, modification, and repair of water and wastewater plants, lift stations, re-pump stations

July 2011 – Mar 2015 Utility Technicians, Inc.
Position: Foreman, Construction & Service Technician
Duties: Installation and service of lift stations, construction of water plants, water line construction, Sewpercoat applicator for manholes

Feb, 2008-July 2011 Utility Technicians, Inc.
Position: Laborer
Duties: Assisted foreman with installation of lift stations, water line repairs and service work

May 2007-Feb 2008 Kerr's Truck and Car Sales
Position: Mechanic and sales
Duties: Maintained vehicles and sold vehicles.

SKILLS:

- Wastewater Sewer Plants & Lift Stations—complete rehab & construction; motors, blowers & pump replacement & repairs; replace and repair piping & fittings; control panel repair & replacement
- Water & Hydrotank—tank cleaning, rehab (including sandblasting) & painting; inspections (with FL registered professional engineer); installation of fire water tanks
- Sanitary sewer line pressure testing and jetter cleaning
- Manhole and Wet Well rehab, including surface coating (Sewpercoat) and high pressure grouting
- Operate digital inline zoom video for sewer lines
- Certified backflow tester and repair/maintenance technician

CERTIFICATIONS: Certified Underground Utility and Excavation Contractor
License # CUC1225240
Class A CDL Driver's License
Dept of Transportation Maintenance of Traffic (Intermediate)
Confined Space Entry
Backflow Prevention Device Technician
Backflow Prevention Assembly Repair and Maintenance
Infiltrator Systems Training
DOT Drug/Alcohol Awareness Training

EDUCATION: Umatilla High School, graduated 2007

Michael J. Straub

EXPERIENCE
Road and Underground Utility Construction, Stormwater Management Systems, Construction Inspection & Coordination, Cost Estimating, Constructability Reviews

EDUCATION
Lake Sumter Community College - Associate of Arts, Engineering Transfer
Ashford University - Bachelor of Arts- Summa Cum Laude, Instructional Design

REGISTRATION
Certified General Contractor #CGC061548
Certified Utility & Excavation Contractor #CUC057413
Class V Fire Protection Contractor #52687400012004
Certified Stormwater Management Inspector #18703
Real Estate Sales Associate #SL3249351

WORK HISTORY
RCM Utilities, LLC., Eustis, Florida
Project Manager and Estimator
June 2022 to Present
(Water and Sewer Specialty Contracting)

Utility Technicians, Inc., Umatilla, Florida
Project Manager and Estimator
May 2018 to May 2022
(Water and Sewer Specialty Contracting)

Griffey Engineering, Inc., Eustis, Florida
Engineering Technician
May 2013 To May 2018
(Civil Engineering)

Dimensional Contracting, Inc., Howey-in-the-Hills, Florida
Owner
January 2000 To January 2013
(General Contracting, Sitework and Utilities)

REFERENCES
Griffey Engineering, Inc.- Owner
Don Griffey
36202 E Eldorado Lake Dr, Eustis, FL
Ph. (352) 589-2368

Lockheed Martin- Engineer
Gary McGrath
15011 Thoroughbred Ln, Montverde, FL
Ph. (407) 399-9218

Nicholas Sellers
nick@rcmutilities.com

EDUCATION
Dual B.S., Geography & Social Science
Florida State University, Tallahassee, FL
Certificate: Urban & Regional Planning

RELEVANT EXPERIENCE
RCM Utilities, Eustis, FL
Division Manager September 2023- Present

- Qualify RCM Utilities with Florida Certified Plumbing Contractors license.
- Managed the implementation and growth of the Plumbing Division.
- Collaborated with executives to revise and enhance the safety culture of the entire company.
- Steered the implementation of new hire apprentice programs.
- Implemented new software system which increases production, reduce losses and tracks production.

The Plumber New Construction & Service Inc, Mount Dora, FL
VP March 2020 – September 2023

- Oversaw plumbing operations for residential and commercial construction projects.
- Managed service department and lead a team that delivered high quality workmanship at an honest rate.
- Developed a septic division that generated additional revenue and growth.

Duke Energy, Winter Park, FL
Lineman May 2014 – May 2019

- Lead safety committee meetings monthly and developed strategic safety plans to ensure an accident-free workplace.
- Managed a wide range of projects installing and maintain overhead and underground utilities.

SKILLS, ABILITIES & CERTIFICATIONS:

- Certified Plumbing Contractor License # CFC1431823
- CPR and First Aid Certified
- Class A CDL Driver's License
- Smith Driving Certified
- OSHA Certified
- FUJI Certified
- Infiltrator Certified
- Gastite Certified

John Lake

Professional Summary
Experienced and licensed Electrical Contractor with over 12 years in commercial and industrial electrical work. Proven leadership managing large crews of 40–50 electricians on complex projects, including hospitals, schools, and water treatment facilities. Skilled in new construction, renovations, and project management. Currently qualifying electrical operations and leading the electrical department at RCM Utilities as Project Manager.

Certifications & Licenses
- State of Florida Electrical Contractor License
- 2024 NFPA 70E Standards for Electrical Safety in the Workforce Series
- OSHA 30

Professional Experience
RCM Utilities – Eustis, FL
Project Manager, Electrical Department
January 2024 – Present
- Oversee all electrical operations for commercial and industrial projects
- Manage budgeting, scheduling, procurement, and on-site operations
- Qualify the company under personal electrical contracting license
- Lead coordination between field crews, clients, engineers, and subcontractors

Electrical Services – Leesburg, FL
Lead Foreman / Superintendent
2013 – 2024
- Managed crews of 40–50 electricians across large-scale projects
- Worked on high-profile projects including hospitals, schools, wastewater and water treatment plants
- Handled full scope of electrical work from underground to final trim-out
- Oversaw renovation projects and new construction for institutional and industrial facilities
- Maintained job safety, timelines, and quality assurance standards

Project Highlights
- Hospital Renovations and New Construction
- Public School Electrical Upgrades and New Builds
- Water & Wastewater Treatment Plant Electrical Systems
- Large-Scale Commercial Installations

Skills
- Project & Crew Management
- Commercial & Industrial Electrical Systems
- Electrical Code Compliance
- Blueprint & Technical Plan Reading
- Budgeting & Scheduling
- Safety Compliance
- Permitting & Inspections
- Strong Leadership & Communication

Allen Bates III

Professional Summary
Dynamic and results-driven executive with over 15 years of experience in the insurance and utility industries. Proven track record of leadership in managing independent insurance agencies and strategic financial oversight. Skilled in operations management, team leadership, and business development. Seeking to leverage diverse experience and strategic insight in a challenging executive role.

Professional Experience

VP/CFO, RCM Utilities
June 2024 – Present
- Provide strategic financial leadership and oversee all financial operations for a utility company.
- Develop and implement financial strategies to support business growth and operational efficiency.
- Collaborate with executive leadership to drive strategic initiatives and improve financial performance.

Owner/Operator, Bates Insurance Group
2015 – 2024
- Founded and successfully managed an independent insurance agency, overseeing all aspects of operations.
- Directed business development, client relations, and strategic growth initiatives, achieving consistent revenue growth.
- Led a team to provide exceptional customer service while maintaining operational efficiency and profitability.

Personal Lines Manager, Bryant Coverall Insurance
2009 – 2015
- Managed the Personal Lines side of an independent insurance agency, ensuring client satisfaction and operational excellence.
- Developed and implemented sales strategies that increased client retention and acquisition.
- Supervised a team, providing leadership and training to enhance performance and productivity.

Education

High School Diploma
Umatilla High School, Graduated 2008

Skills
• Strategic Financial Planning & Analysis
• Business Development & Growth Strategy
• Leadership & Team Management
• Client Relations & Customer Service Excellence
• Operations Management
• Risk Assessment & Mitigation
• Insurance Industry Expertise (Personal Lines & Commercial)

MELISSA MOSS

EMPLOYMENT EXPERIENCE:

January 2019 – Present RCM Utilities, LLC
Position: Office Manager / Corporate Officer (Controller / Secretary)
Duties:

- Manage all job communication and files, Notice to Owner and Release of Liens, request bonding and manage status reports with bonding company
- Manage incoming requests for bids and quotes, identify issues to review with President, create and manage responses for bids and quotes
- Manage accounts payables and receivables, process checks for signature, receive and post payments, reconcile bank and checking accounts, monthly closing, annual audit, end of year processing
- Manage human resources, including timesheets, payroll, payroll taxes, benefits, employee personnel files, time off records, on-call schedule
- Process and maintain certificates of insurance, workers compensation, liability insurance and other related requirements and documents
- Answer, direct or handle all incoming telephone calls
- Maintain corporate personnel manual and drug-free workplace manual
- Maintain office equipment leases, repairs and supplies

Sept 2011 – Nov. 2018 Utility Technicians, Inc.
Position: Administrative Assistant
Duties: Manage job and bid files, accounts payables and receivables, manage employee timesheets and time off records, participate in weekly job meetings and manage job scheduling board, maintain on-call schedule for technicians

April 2009 – June 2011 Allen's Well Drilling, Inc.
Position: Secretary
Duties: Maintain the smooth running of office through a variety of administrative and clerical duties. Schedule and coordinate service work with technicians.

Jan 2006 – April 2009 Hidden Valley Ranch & Nursery, Inc.
Position: Secretary
Duties: Answer calls, take messages, handle correspondence, arrange appointments, managing databases, manage orders going out, filing

June 1989 -Sept. 2005 Winn-Dixie
Position: Pricing Manager
Duties: Ensure accuracy of prices for the store

EDUCATION: Clewiston High School, graduated 1989

WESTON HARTWRIGHT

EMPLOYMENT EXPERIENCE:

June 2019 – Present RCM Utilities, LLC
Position: Vice Present of Construction
Duties: Manages day to day business of the operations department while balancing the responsibilities of various business lines such as business analysis, vendor, and risk management.

Mar 2015 – May 2019 Utility Technicians, Inc.
Position: Foreman, Construction & Service
Duties: Installation and service of lift stations, construction of water plants, water line construction, sewpercoat applicator for manholes, supervise crew

Nov 2011 – Feb 2015 Utility Technicians, Inc.
Position: Lead Construction & Service Technician
Duties: Service and repair of water & sewer plants and lift stations

Jun 2009 – Nov 2011 City of Clermont
Position: Utilities Department Technician
Duties: Lift station and new construction technician

Sep 2005 – May 2009 Utility Technicians, Inc.
Position: Construction & Service Technician
Duties: Service and repair of water & sewer plants and lift stations

Jan 1994 – Aug 2005 Donahue's Automotive Company
Position: Vehicle Mechanic

SKILLS:

- Wastewater Sewer Plants & Lift Stations—complete rehab & construction; motors, blowers & pump replacement & repairs; replace and repair piping & fittings; control panel repair & replacement
- Water & Hydro tank—tank cleaning, rehab (including sandblasting) & painting; inspections (with FL registered professional engineer); installation of fire water tanks
- Sanitary sewer line pressure testing and jetter cleaning
- Manhole and Wet Well rehab, including surface coating (Sewpercoat) and high pressure grouting

CERTIFICATIONS: Class B CDL Driver's License
Dept of Transportation Maintenance of Traffic (MOT-Intermediate)
Confined Space Entry Training
Gas Monitor System Training

EDUCATION: Umatilla High School, Umatilla, FL graduated 1994

DIVISION OF CORPORATIONS



Department of State / Division of Corporations / Search Records / Search by Entity Name /

Detail by Entity Name

Florida Limited Liability Company
RCM UTILITIES, LLC

Filing Information

Document Number	L18000014931
FEI/EIN Number	82-4160762
Date Filed	01/17/2018
Effective Date	01/16/2018
State	FL
Status	ACTIVE
Last Event	LC AMENDMENT
Event Date Filed	03/01/2019
Event Effective Date	NONE

Principal Address

1451 Pine Grove Road
Eustis, FL 32726

Changed: 01/19/2024

Mailing Address

1451 Pine Grove Road
Eustis, FL 32726

Changed: 01/19/2024

Registered Agent Name & Address

CREECH, CHRISTOPHER R
1451 Pine Grove Road
Eustis, FL 32726

Address Changed: 01/19/2024

Authorized Person(s) Detail

Name & Address

Title Manager / President

Creech, Christopher R
1451 Pine Grove Road
EUSTIS, FL 32726

Title Secretary / Controller

Moss, Melissa M
1451 Pine Grove Road
EUSTIS, FL 32726

Title VP

Bates, Francis Allen, III
1451 Pine Grove Road
Eustis, FL 32726

Annual Reports

Report Year	Filed Date
2024	01/19/2024
2024	06/14/2024
2025	01/27/2025

Document Images

01/27/2025 -- ANNUAL REPORT	View image in PDF format
06/14/2024 -- AMENDED ANNUAL REPORT	View image in PDF format
01/19/2024 -- ANNUAL REPORT	View image in PDF format
02/07/2023 -- ANNUAL REPORT	View image in PDF format
03/16/2022 -- ANNUAL REPORT	View image in PDF format
01/13/2021 -- ANNUAL REPORT	View image in PDF format
01/14/2020 -- ANNUAL REPORT	View image in PDF format
03/01/2019 -- LC Amendment	View image in PDF format
02/04/2019 -- ANNUAL REPORT	View image in PDF format
01/17/2018 -- Florida Limited Liability	View image in PDF format

Florida Department of State, Division of Corporations

RCM Utilities, LLC
1451 Pine Grove Road
Eustis, FL 32726
352-561-2990

FINANCIAL RESPONSIBILITY

Banking:

Citizens First Bank
2601 W Torch Lake Drive
The Villages, FL 32163
352-751-2138
Jason Pittman – Jason.Pittman@mycitizensfirst.com

Bonding Company:

Florida Surety Bonds, Inc.
620 N. Wymore Road Suite 200
Maitland, FL 32751
407-786-7766
Sarah O'Linn - sarah@floridasuretybonds.com

Please see attached Bonding letter

FLORIDA SURETY BONDS, INC.

620 N. Wymore Road, Suite 200
Maitland, FL 32751
407-786-7770
Fax 407-786-7766

888-786-BOND (2663)
Fax 888-718-BOND (2663)

www. FloridaSuretyBonds.com

June 5th, 2025

RE: RCM Utilities, LLC Bonding Letter

To Whom It May Concern,

It is a privilege to be the surety agents for RCM Utilities, LLC. Bonds are currently written through The Gray Insurance Company which is A.M. Best Rated “A-, VIII” and has a U.S. Treasury Listing of $21,807,000.00.

RCM Utilities, LLC is an outstanding contractor and we hold them in the highest regard. We are extremely confident in our contractor and encourage you to offer them an opportunity to execute any upcoming projects.

We usually anticipate no difficulties in providing surety bonds for RCM Utilities, LLC in the $7,000,000 single, $40,000,000 aggregate range. These limits are merely guidelines and can be extended subject to underwriting which includes surety review of the contract terms, pertinent bond forms and general financial reporting at the time of said request.

This letter is not an assumption of liability or a commitment to provide any bonds unless all underwriting requirements including contract, bond form and financing review are met prior to issuing any bonds. Neither our agency, nor the surety is liable for any damages relating to this letter or project.

Should you have any questions, please do not hesitate to contact me. My email is sarah@floridasuretybonds.com and my direct line is 407-755-6353.

Best regards,

Sarah K O'Linn

Sarah K. O’Linn
Vice President, Florida Surety Bonds

RCM Utilities, LLC
1451 Pine Grove Road
Eustis, FL 32726
352-561-2990

EQUIPMENT LIST

Trucks:

2020 Ram 5500 with 7500 lb. Crane - Heavy Construction Truck
2020 Ford F550 with 7500lb Crane - Heavy Construction Truck
2022 Ford F550 with 8000 lb. Crane - Heavy Construction Truck
2022 Dodge 5500 with 8000lb Crane - Heavy Construction Truck
2024 Ford F550 with 8000lb Crane - Heavy Construction Truck
2024 Ford F550 with 8000lb Crane - Heavy Construction Truck
2024 Ford F550 with 8000lb Crane - Heavy Construction Truck
2023 Ford F550 with 6000lb Crane – Service Truck
2023 Ford F550 Service Truck with Crane
2023 GMC 3500 Service Truck with Crane
2023 Chevrolet 2500 Service Truck with Crane
2022 Ford F550 Service Truck with Crane
2022 Chevrolet 3500 - Sewpercoat Truck & Trailer
2023 Ford F550 - Sewpercoat Truck & Trailer
2024 Ford F550 - Sewpercoat Truck & Trailer
2023 Transit Connect Plumbing Van
Total of Fleet 42 - Pickup & Heavy Construction and Service Trucks

Trailers:

(4) Gooseneck Trailers
2018 18” Taylor Equipment Trailer
2019 Triple Crown Equipment Trailer
2017 Big T Trailer Equipment Trailer
2022 Tank with Trailer Mobile Hydro Tank
(15) Bigfoot Equipment Trailers
(4) U Dump Trailers
(6) Enclosed Utility Trailers

RCM Utilities, LLC
1451 Pine Grove Road
Eustis, FL 32726
352-561-2990

Equipment:

(2) Vactron Vacuum Trailers

(5) Kubota Excavator U354R1

(2) Kubota Excavator U17VR1

(3) Kubota Excavator U27-4R1

Kubota Excavator U55-4

Kubota Excavator KX080

(2) Kubota Skidsteer

John Deere 624E Front Wheel Loader 4yd

Mobile Track Crane

Mr. Manhole Platinum Series

(3) Mig & Tig Welders

(2) Concrete Mixer

(4) Mortar Mixer

(1) 56HP Tractor with Bucket

(2) Hose Monster Fire Hydrant Test Kit

(3) 5000 lb. Warehouse Forklift

3000 lb. Warehouse Forklift

(3) Sewpercoat Sewer Lining Trailer

Ditch Witch Trencher

(15) 3” Diaphragm Mud Hogg Pumps

(5) 2” & 3” Trash Pumps

(2) Plate Compactor

(2) Vibratory walk behind Compactor

(4) High Pressure leak stop Grout Pump

(4) 11000 - Watt Welder Generators

(5) 8600 - Watt Generator

(15) 5000 - Watt Generator

(4) Gas Powered Air Compressor

(12) Confined Space Rescue Kit Tripod, Harness, Blowers & Gas Monitors

(4) Backflow Preventor Test Gauge

2022 Mobile Welding Trailer

(5) Concrete Core Drill 2” – 14”

RCM Utilities, LLC
1451 Pine Grove Road
Eustis, FL 32726
352-561-2990

Firm Experience and Capabilities

RCM Utilities LLC is a Florida-based contractor specializing in wastewater infrastructure rehabilitation, manhole restoration, and inflow and infiltration (I&I) mitigation services. The firm provides turnkey solutions to municipal clients throughout Florida, with a focus on restoring aging infrastructure, reducing system infiltration, and extending asset service life. RCM Utilities has successfully completed numerous municipal wastewater rehabilitation projects ranging in value from $12,000 to over $847,000, demonstrating the firm's ability to execute both small-scale repairs and large, multi-site rehabilitation programs.

- The firm routinely performs work directly aligned with this project, including: Manhole rehabilitation and structural restoration
- Cementitious and polymer coating system installation
- Inflow and infiltration (I&I) detection and elimination
- Manhole chimney sealing and frame/cover adjustments
- Bypass pumping and live sewer flow management
- Maintenance of traffic (MOT) and surface restoration

Relevant Project Experience

St. Johns County – Manhole Rehabilitation Program
Contract Value: $847,659.00 (Completed 08/2025)
County-wide manhole rehabilitation at multiple locations.

City of Panama City – Sanitary Sewer Manholes
Contract Value: $226,382.02 (Completed 12/2024)
Rehabilitation of 58 manholes including ring, cover replacement and chimney sealing.

City of Winter Haven – Hamilton Shores Manhole Rehabilitation
Contract Value: $79,520.00 (Completed 05/2025)
Rehabilitation of 27 manholes including infiltration repair and coating.

City of Zephyrhills – Manhole Rehabilitation
Contract Value: $49,593.00 (Completed 02/2025)
Rehabilitation of 21 manholes including coating and hardware installation.

City of Alachua – Lift Station 14 Rehabilitation
Contract Value: $12,229.36 (Completed 08/2024)
Wet well rehabilitation and coating with bypass assistance.

Technical Capabilities

RCM Utilities is fully equipped to self-perform all aspects of the proposed work, including bypass pumping, confined space entry, cleaning, structural repair, coating installation, chimney sealing, frame adjustments, and restoration.

RCM Utilities, LLC
1451 Pine Grove Road
Eustis, FL 32726
352-561-2990

Ability to Complete the Project

RCM Utilities has the personnel, equipment, and operational capacity to complete this project in accordance with all specifications and schedule requirements, including multi-site coordination and uninterrupted service operations.

Personnel Experience

RCM Utilities employs experienced project managers, superintendents, and field crews trained in confined space entry, coating systems, and structural rehabilitation, with over 200 years of combined experience.

Claims, Litigation, and Compliance Statement

Claims and Disputes

RCM Utilities LLC affirms that there are no unresolved or ongoing claims or disputes in excess of $500,000 currently pending against the firm. There are no such claims against the principals of the firm, nor does the company have any active claims exceeding $500,000 against third parties.

Litigation History (Past Five Years)

RCM Utilities LLC has not been involved in any material litigation that would adversely impact its financial condition or ability to perform contractual obligations. Any minor disputes have been resolved without material litigation or adverse judgments.

Regulatory Compliance Statement

RCM Utilities LLC certifies that it is not currently in violation of any federal, state, or local statutes, rules, or regulations that would impact its operations. The firm complies with all applicable State of Florida laws, local ordinances, OSHA standards, and wastewater infrastructure regulations, including those of the City of St. Pete Beach.

Bid Bond

CONTRACTOR:
(Name, legal status and address)
RCM Utilities, LLC
1451 Pine Grove Road
Eustis, FL 32726

SURETY:
(Name, legal status and principal place of business)
The Gray Casualty & Surety Company
P.O. Box 6202
Metairie, LA 70009-6202

This document has important legal consequences. Consultation with an attorney is encouraged with respect to its completion or modification.
Any singular reference to Contractor, Surety, Owner or other party shall be considered plural where applicable.

OWNER:
(Name, legal status and address)
City of St. Pete Beach
155 Corey Avenue
St. Pete Beach, FL 33706-1839

BOND AMOUNT:
5% Five Percent of Amount Bid

PROJECT:
(Name, location or address, and Project number, if any) Wastewater System Rehabilitation Services, St. Pete Beach, FL
Project Number, if any:

The Contractor and Surety are bound to the Owner in the amount set forth above, for the payment of which the Contractor and Surety bind themselves, their heirs, executors, administrators, successors and assigns, jointly and severally, as provided herein. The conditions of this Bond are such that if the Owner accepts the bid of the Contractor within the time specified in the bid documents, or within such time period as may be agreed to by the Owner and Contractor, and the Contractor either (1) enters into a contract with the Owner in accordance with the terms of such bid, and gives such bond or bonds as may be specified in the bidding or Contract Documents, with a surety admitted in the jurisdiction of the Project and otherwise acceptable to the Owner, for the faithful performance of such Contract and for the prompt payment of labor and material furnished in the prosecution thereof; or (2) pays to the Owner the difference, not to exceed the amount of this Bond, between the amount specified in said bid and such larger amount for which the Owner may in good faith contract with another party to perform the work covered by said bid, then this obligation shall be null and void, otherwise to remain in full force and effect. The Surety hereby waives any notice of an agreement between the Owner and Contractor to extend the time in which the Owner may accept the bid. Waiver of notice by the Surety shall not apply to any extension exceeding sixty (60) days in the aggregate beyond the time for acceptance of bids specified in the bid documents, and the Owner and Contractor shall obtain the Surety's consent for an extension beyond sixty (60) days.

If this Bond is issued in connection with a subcontractor's bid to a Contractor, the term Contractor in this Bond shall be deemed to be Subcontractor and the term Owner shall be deemed to be Contractor.

When this Bond has been furnished to comply with a statutory or other legal requirement in the location of the Project, any provision in this Bond conflicting with said statutory or legal requirement shall be deemed deleted herefrom and provisions conforming to such statutory or other legal requirement shall be deemed incorporated herein. When so furnished, the intent is that this Bond shall be construed as a statutory bond and not as a common law bond.

Signed and sealed this 8th day of April, 2026

Virginia Lynn Staley Foley
(Witness)

RCM Utilities, LLC
(Principal) *(Seal)*

By: F. Allen Rowell III
(Title)

K. Moulton
(Witness) Kelly Moulton

The Gray Casualty & Surety Company
(Surety) *(Seal)*

By: Jeffrey W. Reich
(Title) Jeffrey W. Reich, Attorney-in-Fact & FL Licensed Resident Agent
Inquiries: 407-786-7770

By arrangement with the American Institute of Architects, the National Association of Surety Bond Producers (NASBP) (www.nasbp.org) makes this form document available to its members, affiliates, and associates in Microsoft Word format for use in the regular course of surety business. NASBP vouches that the original text of this document conforms exactly to the text in AIA Document A310-2010, Bid Bond. Subsequent modifications may be made to the original text of this document by users, so careful review of its wording and consultation with an attorney are encouraged before its completion, execution or acceptance.

THE GRAY INSURANCE COMPANY
THE GRAY CASUALTY & SURETY COMPANY

GENERAL POWER OF ATTORNEY

Bond Number: Bid Bond
Principal: RCM Utilities, LLC
Obligee: City of St. Pete Beach

KNOW ALL BY THESE PRESENTS, THAT The Gray Insurance Company and The Gray Casualty & Surety Company, corporations duly organized and existing under the laws of Louisiana, and having their principal offices in Metairie, Louisiana, do hereby make, constitute, and appoint: Jeffrey W. Reich

on behalf of each of the Companies named above its true and lawful Attorney(s)-in-Fact, to make, execute, seal and deliver, for and on its behalf and as its deed, bonds, or other writings obligatory in the nature of a bond, as surety, contracts of suretyship as are or may be required or permitted by law, regulation, contract or otherwise, provided that no bond or undertaking or contract of suretyship executed under this authority shall exceed the amount of
$25,000,000.00.

This Power of Attorney is granted and is signed by facsimile under and by the authority of the following Resolutions adopted by the Boards of Directors of both The Gray Insurance Company and The Gray Casualty & Surety Company at meetings duly called and held on the 26th day of June, 2003.

"RESOLVED, that the President, Executive Vice President, any Vice President, or the Secretary be and each or any of them hereby is authorized to execute a power of Attorney qualifying the attorney named in the given Power of Attorney to execute on behalf of the Company bonds, undertakings, and all contracts of surety, and that each or any of them is hereby authorized to attest to the execution of such Power of Attorney, and to attach the seal of the Company; and it is

FURTHER RESOLVED, that the signature of such officers and the seal of the Company may be affixed to any such Power of Attorney or to any certificate relating thereto by facsimile, and any such Power of Attorney or certificate bearing such facsimile signature or facsimile seal shall be binding upon the Company now and in the future when so affixed with regard to any bond, undertaking or contract of surety to which it is attached.

IN WITNESS WHEREOF, The Gray Insurance Company and The Gray Casualty & Surety Company have caused their official seals to be hereinto affixed, and these presents to be signed by their authorized officers this 28th day of October, 2021.

THE GRAY INSURANCE COMPANY SEAL

By: Michael T. Gray
Michael T. Gray
President
The Gray Insurance Company

Cullen S. Piske
President
The Gray Casualty & Surety Company

THE GRAY CASUALTY & SURETY COMPANY SEAL

State of Louisiana
ss:
Parish of Jefferson

On this 28th day of October, 2021, before me, a Notary Public, personally appeared Michael T. Gray, President of The Gray Insurance Company, and Cullen S. Piske, President of The Gray Casualty & Surety Company, personally known to me, being duly sworn, acknowledged that they signed the above Power of Attorney and affixed the seals of the companies as officers of, and acknowledged said instrument to be the voluntary act and deed, of their companies.

Leigh Anne Henican
Notary Public
Notary ID No. 92653
Orleans Parish, Louisiana

Leigh Anne Henican
Notary Public, Parish of Orleans State of Louisiana
My Commission is for Life

I, Mark S. Manguno, Secretary of The Gray Insurance Company, do hereby certify that the above and forgoing is a true and correct copy of a Power of Attorney given by the companies, which is still in full force and effect. IN WITNESS WHEREOF, I have set my hand and affixed the seals of the Company this 8th day of April , 2026 .

I, Leigh Anne Henican, Secretary of The Gray Casualty & Surety Company , do hereby certify that the above and forgoing is a true and correct copy of a Power of Attorney given by the companies, which is still in full force and effect. IN WITNESS WHEREOF, I have set my hand and affixed the seals of the Company this 8th day of April , 2026 .

THE GRAY INSURANCE COMPANY SEAL

THE GRAY CASUALTY & SURETY COMPANY SEAL

THE GRAY CASUALTY & SURETY COMPANY SEAL 806

CERTIFICATE OF LIABILITY INSURANCE

DATE (MM/DD/YYYY): 04/06/2026

THIS CERTIFICATE IS ISSUED AS A MATTER OF INFORMATION ONLY AND CONFERS NO RIGHTS UPON THE CERTIFICATE HOLDER. THIS CERTIFICATE DOES NOT AFFIRMATIVELY OR NEGATIVELY AMEND, EXTEND OR ALTER THE COVERAGE AFFORDED BY THE POLICIES BELOW. THIS CERTIFICATE OF INSURANCE DOES NOT CONSTITUTE A CONTRACT BETWEEN THE ISSUING INSURER(S), AUTHORIZED REPRESENTATIVE OR PRODUCER, AND THE CERTIFICATE HOLDER.

IMPORTANT: If the certificate holder is an ADDITIONAL INSURED, the policy(ies) must have ADDITIONAL INSURED provisions or be endorsed. If SUBROGATION IS WAIVED, subject to the terms and conditions of the policy, certain policies may require an endorsement. A statement on this certificate does not confer rights to the certificate holder in lieu of such endorsement(s).

PRODUCER
Marsh McLennan Agency, LLC - Bouchard Region
101 North Starcrest Drive
Clearwater, FL 33765

CONTACT NAME:
PHONE (A/C, No, Ext): (727) 447-6481 **FAX (A/C, No):**
E-MAIL ADDRESS:

INSURER(S) AFFORDING COVERAGE	NAIC #
INSURER A : American Zurich Insurance Company	40142
INSURER B :	
INSURER C :	
INSURER D :	
INSURER E :	
INSURER F :	

INSURED
FrankCrum 6, Inc. Alt. Emp: RCM Utilities, LLC
100 South Missouri Avenue
Clearwater, FL 33756

COVERAGES **CERTIFICATE NUMBER:** 25FL0801266863 **REVISION NUMBER:**

THIS IS TO CERTIFY THAT THE POLICIES OF INSURANCE LISTED BELOW HAVE BEEN ISSUED TO THE INSURED NAMED ABOVE FOR THE POLICY PERIOD INDICATED. NOTWITHSTANDING ANY REQUIREMENT, TERM OR CONDITION OF ANY CONTRACT OR OTHER DOCUMENT WITH RESPECT TO WHICH THIS CERTIFICATE MAY BE ISSUED OR MAY PERTAIN, THE INSURANCE AFFORDED BY THE POLICIES DESCRIBED HEREIN IS SUBJECT TO ALL THE TERMS, EXCLUSIONS AND CONDITIONS OF SUCH POLICIES. LIMITS SHOWN MAY HAVE BEEN REDUCED BY PAID CLAIMS.

INSR LTR	TYPE OF INSURANCE	ADDL INSD	SUBR WVD	POLICY NUMBER	POLICY EFF (MM/DD/YYYY)	POLICY EXP (MM/DD/YYYY)	LIMITS	
	COMMERCIAL GENERAL LIABILITY						EACH OCCURRENCE	$
	☐ CLAIMS-MADE ☐ OCCUR						DAMAGE TO RENTED PREMISES (Ea occurrence)	$
							MED EXP (Any one person)	$
							PERSONAL & ADV INJURY	$
	GEN'L AGGREGATE LIMIT APPLIES PER:						GENERAL AGGREGATE	$
	☐ POLICY ☐ PRO-JECT ☐ LOC						PRODUCTS - COMP/OP AGG	$
	☐ OTHER:							$
	AUTOMOBILE LIABILITY						COMBINED SINGLE LIMIT (Ea accident)	$
	☐ ANY AUTO						BODILY INJURY (Per person)	$
	☐ OWNED AUTOS ONLY ☐ SCHEDULED AUTOS						BODILY INJURY (Per accident)	$
	☐ HIRED AUTOS ONLY ☐ NON-OWNED AUTOS ONLY						PROPERTY DAMAGE (Per accident)	$
								$
	☐ **UMBRELLA LIAB** ☐ OCCUR						EACH OCCURRENCE	$
	☐ **EXCESS LIAB** ☐ CLAIMS-MADE						AGGREGATE	$
	☐ DED ☐ RETENTION $							$
A	**WORKERS COMPENSATION AND EMPLOYERS' LIABILITY** Y / N ANY PROPRIETOR/PARTNER/EXECUTIVE OFFICER/MEMBER EXCLUDED? ☐ **(Mandatory in NH)** If yes, describe under DESCRIPTION OF OPERATIONS below	N / A		WC 47-58-512-14	06/01/2025	06/01/2026	X PER STATUTE ☐ OTH-ER	
							E.L. EACH ACCIDENT	$ 1,000,000
							E.L. DISEASE - EA EMPLOYEE	$ 1,000,000
							E.L. DISEASE - POLICY LIMIT	$ 1,000,000
				Location Coverage Period:	07/18/2025	06/01/2026	**Client#** 62583-FL	

DESCRIPTION OF OPERATIONS / LOCATIONS / VEHICLES (ACORD 101, Additional Remarks Schedule, may be attached if more space is required)

Coverage is provided for only those co-employees of, but not subcontractors to:
RCM Utilities, LLC
1451 Pine Grove Rd
Eustis, FL 32726

CERTIFICATE HOLDER

City of St. Pete Beach
155 Corey Avenue
St. Pete Beach, FL 33706

CANCELLATION

SHOULD ANY OF THE ABOVE DESCRIBED POLICIES BE CANCELLED BEFORE THE EXPIRATION DATE THEREOF, NOTICE WILL BE DELIVERED IN ACCORDANCE WITH THE POLICY PROVISIONS.

AUTHORIZED REPRESENTATIVE
Todd George

© 1988-2015 ACORD CORPORATION. All rights reserved.

CERTIFICATE OF LIABILITY INSURANCE

DATE (MM/DD/YYYY): 04/06/2026

THIS CERTIFICATE IS ISSUED AS A MATTER OF INFORMATION ONLY AND CONFERS NO RIGHTS UPON THE CERTIFICATE HOLDER. THIS CERTIFICATE DOES NOT AFFIRMATIVELY OR NEGATIVELY AMEND, EXTEND OR ALTER THE COVERAGE AFFORDED BY THE POLICIES BELOW. THIS CERTIFICATE OF INSURANCE DOES NOT CONSTITUTE A CONTRACT BETWEEN THE ISSUING INSURER(S), AUTHORIZED REPRESENTATIVE OR PRODUCER, AND THE CERTIFICATE HOLDER.

IMPORTANT: If the certificate holder is an ADDITIONAL INSURED, the policy(ies) must have ADDITIONAL INSURED provisions or be endorsed. If SUBROGATION IS WAIVED, subject to the terms and conditions of the policy, certain policies may require an endorsement. A statement on this certificate does not confer rights to the certificate holder in lieu of such endorsement(s).

PRODUCER	CONTACT NAME: Ali Altarriba
Brown & Brown Insurance Services, Inc. 1300 Citizens Blvd, Suite 100 Leesburg FL 34748	PHONE (A/C, No, Ext): FAX (A/C, No): E-MAIL ADDRESS: Alexandria.Altarriba@bbrown.com

INSURER(S) AFFORDING COVERAGE	NAIC #
INSURER A : BITCO General Insurance Corporation	20095
INSURER B :	
INSURER C :	
INSURER D :	
INSURER E :	
INSURER F :	

INSURED
RCM Utilities, LLC
1451 Pine Grove Rd
Eustis FL 32726

COVERAGES **CERTIFICATE NUMBER:** 26-27 **REVISION NUMBER:**

THIS IS TO CERTIFY THAT THE POLICIES OF INSURANCE LISTED BELOW HAVE BEEN ISSUED TO THE INSURED NAMED ABOVE FOR THE POLICY PERIOD INDICATED. NOTWITHSTANDING ANY REQUIREMENT, TERM OR CONDITION OF ANY CONTRACT OR OTHER DOCUMENT WITH RESPECT TO WHICH THIS CERTIFICATE MAY BE ISSUED OR MAY PERTAIN, THE INSURANCE AFFORDED BY THE POLICIES DESCRIBED HEREIN IS SUBJECT TO ALL THE TERMS, EXCLUSIONS AND CONDITIONS OF SUCH POLICIES. LIMITS SHOWN MAY HAVE BEEN REDUCED BY PAID CLAIMS.

INSR LTR	TYPE OF INSURANCE	ADDL INSD	SUBR WVD	POLICY NUMBER	POLICY EFF (MM/DD/YYYY)	POLICY EXP (MM/DD/YYYY)	LIMITS	
A	[X] COMMERCIAL GENERAL LIABILITY [ ] CLAIMS-MADE [X] OCCUR GEN'L AGGREGATE LIMIT APPLIES PER: [ ] POLICY [X] PRO-JECT [ ] LOC [ ] OTHER:			CLP3767527	01/15/2026	01/15/2027	EACH OCCURRENCE DAMAGE TO RENTED PREMISES (Ea occurrence) MED EXP (Any one person) PERSONAL & ADV INJURY GENERAL AGGREGATE PRODUCTS - COMP/OP AGG Employee Benefits	$ 1,000,000 $ 100,000 $ 5,000 $ 1,000,000 $ 2,000,000 $ 2,000,000 $ 1,000,000
A	AUTOMOBILE LIABILITY [X] ANY AUTO [ ] OWNED AUTOS ONLY [ ] SCHEDULED AUTOS [X] HIRED AUTOS ONLY [X] NON-OWNED AUTOS ONLY			CAP3767528	01/15/2026	01/15/2027	COMBINED SINGLE LIMIT (Ea accident) BODILY INJURY (Per person) BODILY INJURY (Per accident) PROPERTY DAMAGE (Per accident) Hired Auto Phys Dmg	$ 1,000,000 $ $ $ $ 100,000
A	[X] UMBRELLA LIAB [X] OCCUR [ ] EXCESS LIAB [ ] CLAIMS-MADE [ ] DED [X] RETENTION $ 10,000			CUP3767529	01/15/2026	01/15/2027	EACH OCCURRENCE AGGREGATE 	$ 5,000,000 $ 5,000,000 $
	WORKERS COMPENSATION AND EMPLOYERS' LIABILITY ANY PROPRIETOR/PARTNER/EXECUTIVE OFFICER/MEMBER EXCLUDED? Y / N [ ] (Mandatory in NH) If yes, describe under DESCRIPTION OF OPERATIONS below	N / A					[ ] PER STATUTE [ ] OTH-ER E.L. EACH ACCIDENT E.L. DISEASE - EA EMPLOYEE E.L. DISEASE - POLICY LIMIT	 $ $ $
A	Rented/Leased Equipment			CLP3767527	01/15/2026	01/15/2027	Limit Deductible	150,000 1,000

DESCRIPTION OF OPERATIONS / LOCATIONS / VEHICLES (ACORD 101, Additional Remarks Schedule, may be attached if more space is required)

CERTIFICATE HOLDER

City of St. Pete Beach
155 Corey Avenue
St. Pete Beach FL 33706

CANCELLATION

SHOULD ANY OF THE ABOVE DESCRIBED POLICIES BE CANCELLED BEFORE THE EXPIRATION DATE THEREOF, NOTICE WILL BE DELIVERED IN ACCORDANCE WITH THE POLICY PROVISIONS.

AUTHORIZED REPRESENTATIVE

© 1988-2015 ACORD CORPORATION. All rights reserved.

CITY OF ST. PETE BEACH					
WASTEWATER SYSTEM REHABILITATION SERVICES					
ITEM	DESCRIPTION	QTY	UNIT	UNIT PRICE	AMOUNT
MANHOLE REHABILITATION					
1	Mobilization	1	EA	$ 1.00	$ 1.00
2	Flagmen (Per-Flagmen)	20	HR	$ 40.00	$ 800.00
3	Multi Lane, Lane Closures (FDOT Index No. 613)	10	EA/DY	$ 100.00	$ 1,000.00
4	Multi Lane, Intersection (FDOT Index No. 615)	10	EA/DY	$ 200.00	$ 2,000.00
5	Arrow Boards - 5' Minimum Horizontal Size	10	EA/DY	$ 85.00	$ 850.00
6	Variable Message Board	10	EA/DY	$ 350.00	$ 3,500.00
7	Concrete Barrier (FDOT Index No. 100)	10	EA/DY	$ 10.00	$ 100.00
8	Low Profile Barrier (FDOT Index No. 120)	10	EA/DY	$ 10.00	$ 100.00
9	Signs in Work Zones	10	EA/DY	$ 5.00	$ 50.00
10	6" Solid line Thermo Plastic - Permanent	200	LF	$ 4.00	$ 800.00
11	24" Stop Bar, Solid, Thermo Plastic, Perm.	200	LF	$ 15.00	$ 3,000.00
12	6" Skip line (6'-10' Skip) Thermo Plastic-Perm.	200	LF	$ 5.00	$ 1,000.00
13	Barricades Type III, with Warning Lights	1000	EA/DY	$ 1.00	$ 1,000.00
14	Barricades Type I or II, with Warning Lights	1000	EA/DY	$ 1.00	$ 1,000.00
15	Repair Manhole Bench and Channel	10	EA	$ 200.00	$ 2,000.00
16	Repair Chimney, Adjust/Replace MH Casting- Unpaved	10	EA	$ 500.00	$ 5,000.00
17	Repair Chimney, Adjust/Replace MH Casting- Asphalt Pavement	100	EA	$ 1,000.00	$ 100,000.00
18	Rebuild Corbel/Chimney for Type B Manhole Casting	10	EA	$ 200.00	$ 2,000.00
19	Furnish Manhole Casting - Type B	10	EA	$ 480.00	$ 4,800.00
20	Furnish Manhole Casting - Type E	30	EA	$ 480.00	$ 14,400.00
21	Severe Manhole Infiltration Elimination	10	EA	$ 200.00	$ 2,000.00
22	Chemical Sealing - Grout	50	GAL	$ 75.00	$ 3,750.00
23	Internal Chimney Sealant - Type B Manhole Casing	5	EA	$ 100.00	$ 500.00

24	Internal Chimney Sealant - Type E Manhole Casing	10	EA	$ 100.00	$ 1,000.00
25	Additional Access Cost for Manhole Coating	10	EA	$ 1.00	$ 10.00
26	Bypass Pumping Setup - 6-10" diameter	5	EA	$ 250.00	$ 1,250.00
27	Bypass Pumping Setup - 12" -14" diameter	20	EA	$ 300.00	$ 6,000.00
28	Bypass Pumping Setup - 15" to 21" diameter	10	EA	$ 300.00	$ 3,000.00
29	Bypass Pumping Setup - 24" diameter	5	EA	$ 500.00	$ 2,500.00
30	Bypass Pumping Operation - 6"-10" diameter	10	DAY	$ 850.00	$ 8,500.00
31	Bypass Pumping Operation - 12"-14" diameter	50	DAY	$ 850.00	$ 42,500.00
32	Bypass Pumping Operation - 15" to 21" diameter	25	DAY	$ 1,000.00	$ 25,000.00
33	Bypass Pumping Operation - 24" diameter	15	DAY	$ 1,000.00	$ 15,000.00
34	Pure Calcium Aluminate Cementitious MH Coating - 48" diameter, Initial	50	EA	$ 1,130.00	$ 56,500.00
35	Pure Calcium Aluminate Cementitious MH Coating - 60" diameter, Initial	10	EA	$ 1,413.00	$ 14,130.00
36	Pure Calcium Aluminate Cementitious MH Coating - 72" diameter, Initial	5	EA	$ 565.00	$ 2,825.00
37	Pure Calcium Aluminate Cementitious MH Coating - 48" diameter, Additional	250	VF	$ 145.00	$ 36,250.00
38	Pure Calcium Aluminate Cementitious MH Coating - 60" diameter, Additional	50	VF	$ 160.00	$ 8,000.00
39	Pure Calcium Aluminate Cementitious MH Coating - 72" diameter, Additional	25	VF	$ 175.00	$ 4,375.00
40	Reinforced Polymer MH Coating - 48" diameter, Initial	5	EA	$ 1,500.00	$ 7,500.00
41	Reinforced Polymer MH Coating - 60" diameter, Initial	5	EA	$ 1,750.00	$ 8,750.00
42	Reinforced Polymer MH Coating - 72" diameter, Initial	5	EA	$ 1,950.00	$ 9,750.00
43	Reinforced Polymer MH Coating - 48" diameter, Additional	25	VF	$ 325.00	$ 8,125.00
44	Reinforced Polymer MH Coating - 60" diameter, Additional	25	VF	$ 375.00	$ 9,375.00
45	Reinforced Polymer MH Coating - 72" diameter, Additional	25	VF	$ 420.00	$ 10,500.00
46	Concrete Curb Replacement - Type D	100	LF	$ 21.50	$ 2,150.00
47	Concrete Curb Replacement - Type F	100	LF	$ 42.50	$ 4,250.00
48	Concrete Curb Replacement - Miami Curb	100	LF	$ 42.50	$ 4,250.00
49	Concrete Sidewalk Replacement - 4" Thick	50	SY	$ 500.00	$ 25,000.00
50	Concrete Sidewalk Replacement - 6" Thick	50	SY	$ 550.00	$ 27,500.00

51	Concrete Driveway Replacement - 4" Thick	50	SY	$ 500.00	$ 25,000.00
52	Concrete Driveway Replacement - 6" Thick	50	SY	$ 550.00	$ 27,500.00
53	Inflow Dish	100	EA	$ 190.00	$ 19,000.00
	SUBTOTAL - MANHOLE REHABILITATION				$ 565,141.00
PIPE LINING					
1	Mobilization	1	EA		$ -
2	Flagmen (Per-Flagmen)	20	HR		$ -
3	Multi Lane, Lane Closures (FDOT Index No. 613)	10	EA/DY		$ -
4	Multi Lane, Intersection (FDOT Index No. 615)	10	EA/DY		$ -
5	Arrow Boards - 5' Minimum Horizontal Size	10	EA/DY		$ -
6	Variable Message Board	10	EA/DY		$ -
7	Concrete Barrier (FDOT Index No. 100)	10	EA/DY		$ -
8	Low Profile Barrier (FDOT Index No. 120)	10	EA/DY		$ -
9	Signs in Work Zones	10	EA/DY		$ -
10	6" Solid line Thermo Plastic - Permanent	200	LF		$ -
11	24" Stop Bar, Solid, Thermo Plastic, Perm.	200	LF		$ -
12	6" Skip line (6'-10' Skip) Thermo Plastic-Perm.	200	LF		$ -
13	Barricades Type III, with Warning Lights	1000	EA/DY		$ -
14	Barricades Type I or II, with Warning Lights	1000	EA/DY		$ -
15	CIPP Main Liner 6" Diameter - 6.0 mm thickness	1100	LF		$ -
16	CIPP Main Liner 8" Diameter - 6.0 mm thickness	72200	LF		$ -
17	CIPP Main Liner 10" Diameter - 6.0 mm thickness	3600	LF		$ -
18	CIPP Main Liner 12" Diameter - 6.0 mm thickness	2400	LF		$ -
19	CIPP Main Liner 15" Diameter - 7.5 mm thickness	1500	LF		$ -
20	CIPP Main Liner 18" Diameter - 9.0 mm thickness	1800	LF		$ -
21	CIPP Main Liner 21" Diameter - 9.0 mm thickness	2900	LF		$ -
22	CIPP Main Liner 24" Diameter - 10.5 mm thickness	3800	LF		$ -

23	CIPP Main Liner 6" Diameter - Thickness Variance + 1.5mm	300	LF		$ -
24	CIPP Main Liner 8" Diameter - Thickness Variance + 1.5mm	5000	LF		$ -
25	CIPP Main Liner 10" Diameter - Thickness Variance + 1.5mm	1000	LF		$ -
26	CIPP Main Liner 12" Diameter - Thickness Variance + 1.5mm	1000	LF		$ -
27	CIPP Main Liner 15" Diameter - Thickness Variance + 1.5mm	300	LF		$ -
28	CIPP Main Liner 18" Diameter - Thickness Variance + 1.5mm	300	LF		$ -
29	CIPP Main Liner 21" Diameter - Thickness Variance + 1.5mm	300	LF		$ -
30	CIPP Main Liner 24" Diameter - Thickness Variance + 1.5mm	300	LF		$ -
31	Bypass Pumping Setup - 6-10" diameter	5	EA		$ -
32	Bypass Pumping Setup - 12" -14" diameter	45	EA		$ -
33	Bypass Pumping Setup - 15" to 21" diameter	20	EA		$ -
34	Bypass Pumping Setup - 24" diameter	5	EA		$ -
35	Bypass Pumping Operation - 6"-10" diameter	10	DAY		$ -
36	Bypass Pumping Operation - 12"-14" diameter	90	DAY		$ -
37	Bypass Pumping Operation - 15" to 21" diameter	40	DAY		$ -
38	Bypass Pumping Operation - 24" diameter	10	DAY		$ -
39	Normal Cleaning - 6" and 8" diameter	73300	LF		$ -
40	Normal Cleaning - 10" and 12" diameter	6000	LF		$ -
41	Normal Cleaning - 15" and 18" diameter	3300	LF		$ -
42	Normal Cleaning - 21" and 24" diameter	6700	LF		$ -
43	Specialty Cleaning - 6" and 8" diameter	1000	LF		$ -
44	Specialty Cleaning - 10" and 12" diameter	100	LF		$ -
45	Specialty Cleaning - 15" and 18" diameter	50	LF		$ -
46	Specialty Cleaning - 21" and 24" diameter	100	LF		$ -
47	Chemical Sealing of Host Pipe - 10" diameter and less	30	EA		$ -
48	Chemical Sealing of Host Pipe - 12" and 15" diameter	10	EA		$ -
49	Chemical Sealing of Host Pipe - 18" to 24" diameter	5	EA		$ -

50	Chemical Sealing - Grout	100	GAL		$	-
51	Removal & Sealing of Protruding Service Connections	25	EA		$	-
52	Additional Access Cost Main Liner	25	EA		$	-
53	Service Reconnection	200	EA		$	-
54	CIPP Liner Testing	5	EA		$	-
				SUBTOTAL - PIPE LINING	$	-
POINT REPAIRS						
1	Mobilization for Routine Response	20	EA		$	-
2	Mobilization for Emergency Response	6	EA		$	-
3	Flagmen (Per-Flagmen)	20	HR		$	-
4	Multi Lane, Lane Closures (FDOT Index No. 613)	5	EA/DY		$	-
5	Multi Lane, Intersection (FDOT Index No. 615)	5	EA/DY		$	-
6	Arrow Boards - 5' Minimum Horizontal Size	10	EA/DY		$	-
7	Variable Message Board	10	EA/DY		$	-
8	Concrete Barrier (FDOT Index No. 415)	10	EA/DY		$	-
9	Low Profile Barrier (FDOT Index No. 412)	10	EA/DY		$	-
10	Signs in Work Zones	10	EA/DY		$	-
11	6" Solid line Thermo Plastic - Permanent	200	LF		$	-
12	24" Stop Bar, Solid, Thermo Plastic, Perm.	200	LF		$	-
13	6" Skip line (6'-10' Skip) Thermo Plastic-Perm.	200	LF		$	-
14	Barricades Type III, with Warning Lights	1000	EA/DY		$	-
15	Barricades Type I or II, with Warning Lights	1000	EA/DY		$	-
16	As-Built Survey	5	EA		$	-
17	Excavation, Unsuitable Material	100	CY		$	-
18	Sheeting & Bracing (Left in Place)	500	SF		$	-
19	Sheeting & Bracing, Pipe Trenches (Removed)	2500	SF		$	-
20	Well Point Dewatering Initial - 6'-8' Deep	10	EA		$	-

21	Well Point Dewatering Initial - 8'-10' Deep	10	EA		$ -
22	Well Point Dewatering Initial - 10'-12' Deep	5	EA		$ -
23	Well Point Dewatering Initial - 12'-14' Deep	5	EA		$ -
24	Well Point Dewatering Initial - 14'-16' Deep	3	EA		$ -
25	Well Point Dewatering Initial - > 16' Deep	3	EA		$ -
26	Well Point Dewatering Additional - 6'-8' Deep	200	EA		$ -
27	Well Point Dewatering Additional - 8'-10' Deep	200	EA		$ -
28	Well Point Dewatering Additional - 10'-12' Deep	100	EA		$ -
29	Well Point Dewatering Additional - 12'-14' Deep	100	EA		$ -
30	Well Point Dewatering Additional - 14'-16' Deep	50	EA		$ -
31	Well Point Dewatering Additional - > 16' Deep	50	EA		$ -
32	Jack & Bore 12" x .188" Steel Casing (6" GS)	40	LF		$ -
33	Jack & Bore 16" x .219" Steel Casing (8" GS)	40	LF		$ -
34	Jack & Bore 20" x .250" Steel Casing (10" GS)	40	LF		$ -
35	Jack & Bore 24" x .281" Steel Casing (12" GS)	40	LF		$ -
36	2" Directional Drill HDPE DR 9, IPS OD	200	LF		$ -
37	4" Directional Drill HDPE DR 11, DIPS OD	300	LF		$ -
38	6" Directional Drill HDPE DR 11, DIPS OD	500	LF		$ -
39	8" Directional Drill HDPE DR 11, DIPS OD	500	LF		$ -
40	10" Directional Drill HDPE DR 11, DIPS OD	500	LF		$ -
41	12" Directional Drill HDPE DR 11, DIPS OD	300	LF		$ -
42	6" PVC Pipe, C-900 DR 18 (Gravity Sewer) 0' - 6' Depth	100	LF		$ -
43	6" PVC Pipe, C-900 DR 18 (Gravity Sewer) 6' - 8' Depth	200	LF		$ -
44	6" PVC Pipe, C-900 DR 18 (Gravity Sewer) 8' - 10' Depth	100	LF		$ -
45	6" PVC Pipe, C-900 DR 18 (Gravity Sewer) 10' - 12' Depth	50	LF		$ -
46	6" PVC Pipe, C-900 DR 18 (Gravity Sewer) 12' - 14' Depth	50	LF		$ -
47	6" PVC Pipe, C-900 DR 18 (Gravity Sewer) 14' - 16' Depth	50	LF		$ -

48	6" PVC Pipe, C-900 DR 18 (Gravity Sewer) 16' - 18' Depth	50	LF		$ -
49	8" DI Pipe, CL 350 (Gravity Sewer) 0' - 6' Depth	50	LF		$ -
50	8" DI Pipe, CL 350 (Gravity Sewer) 6' - 8' Depth	100	LF		$ -
51	8" DI Pipe, CL 350 (Gravity Sewer) 8' - 10' Depth	100	LF		$ -
52	8" DI Pipe, CL 350 (Gravity Sewer) 10' - 12' Depth	50	LF		$ -
53	8" DI Pipe, CL 350 (Gravity Sewer) 12' - 14' Depth	50	LF		$ -
54	8" DI Pipe, CL 350 (Gravity Sewer) 14' - 16' Depth	50	LF		$ -
55	8" DI Pipe, CL 350 (Gravity Sewer) 16' - 18' Depth	50	LF		$ -
56	8" PVC Pipe, C-900 DR 18 (Gravity Sewer) 0' - 6' Depth	200	LF		$ -
57	8" PVC Pipe, C-900 DR 18 (Gravity Sewer) 6' - 8' Depth	400	LF		$ -
58	8" PVC Pipe, C-900 DR 18 (Gravity Sewer) 8' - 10' Depth	400	LF		$ -
59	8" PVC Pipe, C-900 DR 18 (Gravity Sewer) 10' - 12' Depth	400	LF		$ -
60	8" PVC Pipe, C-900 DR 18 (Gravity Sewer) 12' - 14' Depth	400	LF		$ -
61	8" PVC Pipe, C-900 DR 18 (Gravity Sewer) 14' - 16' Depth	200	LF		$ -
62	8" PVC Pipe, C-900 DR 18 (Gravity Sewer) 16' - 18' Depth	200	LF		$ -
63	10" DI Pipe, CL 350 (Gravity Sewer) 0' - 6' Depth	50	LF		$ -
64	10" DI Pipe, CL 350 (Gravity Sewer) 6' - 8' Depth	100	LF		$ -
65	10" DI Pipe, CL 350 (Gravity Sewer) 8' - 10' Depth	100	LF		$ -
66	10" DI Pipe, CL 350 (Gravity Sewer) 10' - 12' Depth	50	LF		$ -
67	10" DI Pipe, CL 350 (Gravity Sewer) 12' - 14' Depth	50	LF		$ -
68	10" DI Pipe, CL 350 (Gravity Sewer) 14' - 16' Depth	50	LF		$ -
69	10" DI Pipe, CL 350 (Gravity Sewer) 16' - 18' Depth	50	LF		$ -
70	10" PVC Pipe, C-900 DR 18 (Gravity Sewer) 0' -6' Depth	100	LF		$ -
71	10" PVC Pipe, C-900 DR 18 (Gravity Sewer) 6' - 8' Depth	400	LF		$ -
72	10" PVC Pipe, C-900 DR 18 (Gravity Sewer) 8' - 10' Depth	400	LF		$ -
73	10" PVC Pipe, C-900 DR 18 (Gravity Sewer) 10' - 12' Depth	400	LF		$ -
74	10" PVC Pipe, C-900 DR 18 (Gravity Sewer) 12' - 14' Depth	400	LF		$ -

75	10" PVC Pipe, C-900 DR 18 (Gravity Sewer) 14' - 16' Depth	200	LF		$ -
76	10" PVC Pipe, C-900 DR 18 (Gravity Sewer) 16' - 18' Depth	200	LF		$ -
77	12" DI Pipe, CL 350 (Gravity Sewer) 0' - 6' Depth	50	LF		$ -
78	12" DI Pipe, CL 350 (Gravity Sewer) 6' - 8' Depth	100	LF		$ -
79	12" DI Pipe, CL 350 (Gravity Sewer) 8' - 10' Depth	100	LF		$ -
80	12" DI Pipe, CL 350 (Gravity Sewer) 10' - 12' Depth	100	LF		$ -
81	12" DI Pipe, CL 350 (Gravity Sewer) 12' - 14' Depth	100	LF		$ -
82	12" DI Pipe, CL 350 (Gravity Sewer) 14' - 16' Depth	50	LF		$ -
83	12" DI Pipe, CL 350 (Gravity Sewer) 16' - 18' Depth	50	LF		$ -
84	12" PVC Pipe, C-900 DR 18 (Gravity Sewer) 0' ' 6' Depth	100	LF		$ -
85	12" PVC Pipe, C-900 DR 18 (Gravity Sewer) 6' - 8' Depth	200	LF		$ -
86	12" PVC Pipe, C-900 DR 18 (Gravity Sewer) 8' - 10' Depth	200	LF		$ -
87	12" PVC Pipe, C-900 DR 18 (Gravity Sewer) 10' - 12' Depth	100	LF		$ -
88	12" PVC Pipe, C-900 DR 18 (Gravity Sewer) 12' - 14' Depth	100	LF		$ -
89	12" PVC Pipe, C-900 DR 18 (Gravity Sewer) 14' - 16' Depth	50	LF		$ -
90	12" PVC Pipe, C-900 DR 18 (Gravity Sewer) 16' - 18' Depth	50	LF		$ -
91	16" DI Pipe, CL 350 (Gravity Sewer) 0' - 6' Depth	200	LF		$ -
92	16" DI Pipe, CL 350 (Gravity Sewer) 6' - 8' Depth	400	LF		$ -
93	16" DI Pipe, CL 350 (Gravity Sewer) 8' - 10' Depth	400	LF		$ -
94	16" DI Pipe, CL 350 (Gravity Sewer) 10' - 12' Depth	200	LF		$ -
95	16" DI Pipe, CL 350 (Gravity Sewer) 12' - 14' Depth	200	LF		$ -
96	16" DI Pipe, CL 350 (Gravity Sewer) 14' - 16' Depth	100	LF		$ -
97	16" DI Pipe, CL 350 (Gravity Sewer) 16' - 18' Depth	100	LF		$ -
98	16" PVC Pipe, C-905 DR 18 (Gravity Sewer) 0' - 6' Depth	100	LF		$ -
99	16" PVC Pipe, C-905 DR 18 (Gravity Sewer) 6' - 8' Depth	200	LF		$ -
100	16" PVC Pipe, C-905 DR 18 (Gravity Sewer) 8' - 10' Depth	200	LF		$ -
101	16" PVC Pipe, C-905 DR 18 (Gravity Sewer) 10' - 12' Depth	100	LF		$ -

102	16" PVC Pipe, C-905 DR 18 (Gravity Sewer) 12' - 14' Depth	100	LF		$ -
103	16" PVC Pipe, C-905 DR 18 (Gravity Sewer) 14' - 16' Depth	50	LF		$ -
104	16" PVC Pipe, C-905 DR 18 (Gravity Sewer) 16' - 18' Depth	50	LF		$ -
105	18" DI Pipe, CL 350 (Gravity Sewer) 0' - 6' Depth	200	LF		$ -
106	18" DI Pipe, CL 350 (Gravity Sewer) 6' - 8' Depth	400	LF		$ -
107	18" DI Pipe, CL 350 (Gravity Sewer) 8' - 10' Depth	400	LF		$ -
108	18" DI Pipe, CL 350 (Gravity Sewer) 10' - 12' Depth	200	LF		$ -
109	18" DI Pipe, CL 350 (Gravity Sewer) 12' - 14' Depth	200	LF		$ -
110	18" DI Pipe, CL 350 (Gravity Sewer) 14' - 16' Depth	100	LF		$ -
111	18" DI Pipe, CL 350 (Gravity Sewer) 16' - 18' Depth	100	LF		$ -
112	18" PVC Pipe, C-905 DR 21 (Gravity Sewer) 0' - 6' Depth	100	LF		$ -
113	18" PVC Pipe, C-905 DR 21 (Gravity Sewer) 6' - 8' Depth	200	LF		$ -
114	18" PVC Pipe, C-905 DR 21 (Gravity Sewer) 8' - 10' Depth	200	LF		$ -
115	18" PVC Pipe, C-905 DR 21 (Gravity Sewer) 10' - 12' Depth	100	LF		$ -
116	18 PVC Pipe, C-905 DR 21 (Gravity Sewer) 12' - 14' Depth	100	LF		$ -
117	18" PVC Pipe, C-905 DR 21 (Gravity Sewer) 14' - 16' Depth	50	LF		$ -
118	18" PVC Pipe, C-905 DR 21 (Gravity Sewer) 16' - 18' Depth	50	LF		$ -
119	21" DI Pipe, CL 350 (Gravity Sewer) 0' - 6' Depth	200	LF		$ -
120	21" DI Pipe, CL 350 (Gravity Sewer) 6' - 8' Depth	400	LF		$ -
121	21" DI Pipe, CL 350 (Gravity Sewer) 8' - 10' Depth	400	LF		$ -
122	21" DI Pipe, CL 350 (Gravity Sewer) 10' - 12' Depth	200	LF		$ -
123	21" DI Pipe, CL 350 (Gravity Sewer) 12' - 14' Depth	200	LF		$ -
124	21" DI Pipe, CL 350 (Gravity Sewer) 14' - 16' Depth	100	LF		$ -
125	21" DI Pipe, CL 350 (Gravity Sewer) 16' - 18' Depth	100	LF		$ -
126	21" PVC Pipe, C-905 DR 21 (Gravity Sewer) 0' - 6' Depth	100	LF		$ -
127	21" PVC Pipe, C-905 DR 21 (Gravity Sewer) 6' - 8' Depth	200	LF		$ -
128	21" PVC Pipe, C-905 DR 21 (Gravity Sewer) 8' - 10' Depth	200	LF		$ -

129	21" PVC Pipe, C-905 DR 21 (Gravity Sewer) 10' - 12' Depth	100	LF		$ -
130	21" PVC Pipe, C-905 DR 21 (Gravity Sewer) 12' - 14' Depth	100	LF		$ -
131	21" PVC Pipe, C-905 DR 21 (Gravity Sewer) 14' - 16' Depth	50	LF		$ -
132	21" PVC Pipe, C-905 DR 21 (Gravity Sewer) 16' - 18' Depth	50	LF		$ -
133	24" DI Pipe, CL 350 (Gravity Sewer) 0' - 6' Depth	200	LF		$ -
134	24" DI Pipe, CL 350 (Gravity Sewer) 6' - 8' Depth	400	LF		$ -
135	24" DI Pipe, CL 350 (Gravity Sewer) 8' - 10' Depth	400	LF		$ -
136	24" DI Pipe, CL 350 (Gravity Sewer) 10' - 12' Depth	200	LF		$ -
137	24" DI Pipe, CL 350 (Gravity Sewer) 12' - 14' Depth	200	LF		$ -
138	24" DI Pipe, CL 350 (Gravity Sewer) 14' - 16' Depth	100	LF		$ -
139	24" DI Pipe, CL 350 (Gravity Sewer) 16' - 18' Depth	100	LF		$ -
140	24" PVC Pipe, C-905 DR 21 (Gravity Sewer) 0' - 6' Depth	100	LF		$ -
141	24" PVC Pipe, C-905 DR 21 (Gravity Sewer) 6' - 8' Depth	200	LF		$ -
142	24" PVC Pipe, C-905 DR 21 (Gravity Sewer) 8' - 10' Depth	200	LF		$ -
143	24" PVC Pipe, C-905 DR 21 (Gravity Sewer) 10' - 12' Depth	100	LF		$ -
144	24" PVC Pipe, C-905 DR 21 (Gravity Sewer) 12' - 14' Depth	100	LF		$ -
145	24" PVC Pipe, C-905 DR 21 (Gravity Sewer) 14' - 16' Depth	50	LF		$ -
146	24" PVC Pipe, C-905 DR 21 (Gravity Sewer) 16' - 18' Depth	50	LF		$ -
147	Install PVC Cleanout	10	EA		$ -
148	Replace PVC Cleanout with Manhole Structure	10	EA		$ -
149	Remove Pipe 2" or 4" (Gravity Sewer)	200	LF		$ -
150	Remove Pipe 6" or 8" (Gravity Sewer)	400	LF		$ -
151	Remove Pipe 10" or 12" (Gravity Sewer)	400	LF		$ -
152	Remove Pipe 15", 16" or 18" (Gravity Sewer)	200	LF		$ -
153	Remove Pipe 21" or 24" (Gravity Sewer)	200	LF		$ -
154	4" Pipe - Install or Adjust Service Lateral 0'-6' Deep	3	EA		$ -
155	4" Pipe - Install or Adjust Service Lateral 6'-8' Deep	3	EA		$ -

156	4" Pipe - Install or Adjust Service Lateral 8'-10' Deep	3	EA		$ -
157	4" Pipe - Install or Adjust Service Lateral 10'-12'Deep	3	EA		$ -
158	4" Pipe - Install or Adjust Service Lateral 12'-14'Deep	2	EA		$ -
159	4" Pipe - Install or Adjust Service Lateral 14'-16'Deep	2	EA		$ -
160	4" Pipe - Install or Adjust Service Lateral 16'-18' Deep	2	EA		$ -
161	6" Pipe - Install or Adjust Service Lateral 0'-6' Deep	3	EA		$ -
162	6" Pipe - Install or Adjust Service Lateral 6'-8' Deep	3	EA		$ -
163	6" Pipe - Install or Adjust Service Lateral 8'-10' Deep	3	EA		$ -
164	6" Pipe - Install or Adjust Service Lateral 10'-12' Deep	3	EA		$ -
165	6" Pipe - Install or Adjust Service Lateral 12'-14' Deep	2	EA		$ -
166	6" Pipe - Install or Adjust Service Lateral 14'-16' Deep	2	EA		$ -
167	6" Pipe - Install or Adjust Service Lateral 16'-18' Deep	2	EA		$ -
168	2" Sewer Line Manhole Connection	3	EA		$ -
169	4" Sewer Line Manhole Connection	3	EA		$ -
170	6" Sewer Line Manhole Connection	5	EA		$ -
171	8" Sewer Line Manhole Connection	5	EA		$ -
172	10" Sewer Line Manhole Connection	3	EA		$ -
173	12" Sewer Line Manhole Connection	3	EA		$ -
174	16" Sewer Line Manhole Connection	3	EA		$ -
175	18" Sewer Line Manhole Connection	2	EA		$ -
176	21” Sewer Line Manhole Connection	2	EA		$ -
177	24” Sewer Line Manhole Connection	2	EA		$ -
178	2" Inside Drop Connection	3	EA		$ -
179	4" Inside Drop Connection	3	EA		$ -
180	6" Inside Drop Connection	3	EA		$ -
181	8" Inside Drop Connection	5	EA		$ -
182	10" Inside Drop Connection	3	EA		$ -

183	12" Inside Drop Connection	3	EA		$ -
184	15"/16" Inside Drop Connection	3	EA		$ -
185	18" Inside Drop Connection	2	EA		$ -
186	21" Inside Drop Connection	3	EA		$ -
187	24" Inside Drop Connection	2	EA		$ -
188	Grouting Out of Service Pipe (Force Main)	30	CY		$ -
189	Disconnect & Plug 2" or 4" Pipe	5	EA		$ -
190	Disconnect & Plug 6" or 8" Pipe	5	EA		$ -
191	Disconnect & Plug 10" or 12" Pipe	5	EA		$ -
192	2" PVC Restrained Joint Pipe & Fittings FM, SDR 21	200	LF		$ -
193	4" PVC Pipe, C-900 DR 18 (Force Main)	500	LF		$ -
194	4" PVC Restrained Joint Pipe & Fittings FM, C-900 DR 18	100	LF		$ -
195	6" PVC Pipe, C-900 DR 18 (Force Main)	500	LF		$ -
196	6" PVC Restrained Joint Pipe & Fittings FM, C-900 DR 18	100	LF		$ -
197	8" PVC Pipe, C-900 DR 18 (Force Main)	500	LF		$ -
198	8" PVC Restrained Joint Pipe & Fittings FM, C-900 DR 18	100	LF		$ -
199	10" PVC Pipe, C-900 DR 18 (Force Main)	500	LF		$ -
200	10" PVC Restrained Joint Pipe & Fittings FM, C-900 DR 18	100	LF		$ -
201	12" PVC Pipe, C-900 DR 18 (Force Main)	300	LF		$ -
202	12" PVC Restrained Joint Pipe & Fittings FM, C-900 DR 18	100	LF		$ -
203	2" Restrained Joints	20	EA		$ -
204	4" Restrained Joints	20	EA		$ -
205	6" Restrained Joints	20	EA		$ -
206	8" Restrained Joints	20	EA		$ -
207	10" Restrained Joints	20	EA		$ -
208	12" Restrained Joints	20	EA		$ -
209	2"-4" Forcemain Pipe and Appurtenances - Over Depth Excavation	400	LF		$ -

210	6"-8" Forcemain Pipe and Appurtenances - Over Depth Excavation	500	LF		$ -
211	10"-12" Forcemain Pipe and Appurtenances - Over Depth Excavation	200	LF		$ -
212	Remove Out of Service Pipe 2" or 4" (Force Main)	500	LF		$ -
213	Remove Out of Service Pipe 6" or 8" (Force Main)	1000	LF		$ -
214	Remove Out of Service Pipe 10" or 12" (Force Main)	500	LF		$ -
215	2" Sleeved Connection	6	EA		$ -
216	4" Sleeved Connection	6	EA		$ -
217	6" Sleeved Connection	10	EA		$ -
218	8" Sleeved Connection	10	EA		$ -
219	10" Sleeved Connection	4	EA		$ -
220	12" Sleeved Connection	4	EA		$ -
221	Reverse Deadman for 2" or 4" Pipe	3	EA		$ -
222	Reverse Deadman for 6" or 8" Pipe	5	EA		$ -
223	Reverse Deadman for 10" or 12" Pipe	3	EA		$ -
224	DI Fittings FM C 153 (Compact Body)	2	TN		$ -
225	2" Air Release Assembly (In-line)	2	EA		$ -
226	2" Air Release Assembly (Offset)	2	EA		$ -
227	2" RWGV (Resilient Wedge Gate Valve) & Box	4	EA		$ -
228	4" RWGV & Box C 515	4	EA		$ -
229	6" RWGV & Box C 515	10	EA		$ -
230	8" RWGV & Box C 515	5	EA		$ -
231	10" RWGV & Box C 515	2	EA		$ -
232	12" RWGV & Box C 515	2	EA		$ -
233	Adjust Valve Box to Finished Grade (In Pavement)	5	EA		$ -
234	Adjust Valve Box to Finished Grade (Outside of Pavement)	5	EA		$ -
235	4" Line Stop	1	EA		$ -
236	6" Line Stop	1	EA		$ -

237	8" Line Stop	1	EA		$ -
238	10" Line Stop	1	EA		$ -
239	12" Line Stop	1	EA		$ -
240	4" x 2" Tapping Saddle Valve & Box	2	EA		$ -
241	4" x 4" Tapping Sleeve Valve & Box	2	EA		$ -
242	6" x 2" Tapping Saddle Valve & Box	2	EA		$ -
243	6" x 4" Tapping Sleeve Valve & Box	2	EA		$ -
244	6" x 6" Tapping Sleeve Valve & Box	2	EA		$ -
245	8" x 2" Tapping Saddle Valve & Box	2	EA		$ -
246	8" x 4" Tapping Sleeve Valve & Box	2	EA		$ -
247	8" x 6" Tapping Sleeve Valve & Box	2	EA		$ -
248	8" x 8" Tapping Sleeve Valve & Box	2	EA		$ -
249	10" x 2" Tapping Saddle Valve & Box	2	EA		$ -
250	10" x 4" Tapping Sleeve Valve & Box	2	EA		$ -
251	10" x 6" Tapping Sleeve Valve & Box	2	EA		$ -
252	10" x 8" Tapping Sleeve Valve & Box	2	EA		$ -
253	10" x 10" Tapping Sleeve Valve & Box	2	EA		$ -
254	12" x 2" Tapping Saddle Valve & Box	2	EA		$ -
255	12" x 4" Tapping Sleeve Valve & Box	2	EA		$ -
256	12" x 6" Tapping Sleeve Valve & Box	2	EA		$ -
257	12" x 8" Tapping Sleeve Valve & Box	2	EA		$ -
258	12" x 10" Tapping Sleeve Valve & Box	2	EA		$ -
259	12" x 12" Tapping Sleeve Valve & Box	2	EA		$ -
260	4' Dia. - Precast Manhole Standard	30	VF		$ -
261	4' Dia. - Precast Manhole Inside Drop	10	VF		$ -
262	4' Dia. - Precast Manhole Outside Drop	10	VF		$ -
263	5' Dia. - Precast Manhole Standard	30	VF		$ -

264	5' Dia. - Precast Manhole Inside Drop	10	VF		$ -
265	5' Dia. - Precast Manhole Outside Drop	10	VF		$ -
266	5' Dia. - Precast Air Release Manhole	10	VF		$ -
267	6' Dia. - Precast Manhole Standard	30	VF		$ -
268	6' Dia. - Precast Manhole Inside Drop	10	VF		$ -
269	6' Dia. - Precast Manhole Outside Drop	10	VF		$ -
270	Removal of Existing Manhole	3	EA		$ -
271	Remove Existing Manhole Additional	30	VF		$ -
272	Initial Excavation - 0'-6' Deep	5	EA		$ -
273	Initial Excavation - 6'-8' Deep	6	EA		$ -
274	Initial Excavation - 8'-10' Deep	6	EA		$ -
275	Initial Excavation - 10'-12' Deep	6	EA		$ -
276	Initial Excavation - 12'-14' Deep	3	EA		$ -
277	Initial Excavation - 14'-16' Deep	3	EA		$ -
278	Initial Excavation - 16'-18' Deep	2	EA		$ -
279	Initial Excavation - 18'-20' Deep	2	EA		$ -
280	Additional Excavation - 0'-6' Deep	100	LF		$ -
281	Additional Excavation - 6'-8' Deep	100	LF		$ -
282	Additional Excavation - 8'-10' Deep	100	LF		$ -
283	Additional Excavation - 10'-12' Deep	100	LF		$ -
284	Additional Excavation - 12'-14' Deep	100	LF		$ -
285	Additional Excavation - 14'-16' Deep	100	LF		$ -
286	Additional Excavation - 16'-18' Deep	50	LF		$ -
287	Additional Excavation - 18'-20' Deep	50	LF		$ -
288	Wastewater Bypass Pumping, Set up, 6" - 10" diameter	5	EA		$ -
289	Wastewater Bypass Pumping, Set up, 12" - 14" diameter	2	EA		$ -
290	Wastewater Bypass Pumping, Set up, 15" - 21" diameter	2	EA		$ -

291	Wastewater Bypass Pumping, Set up, 24" diameter	2	EA		$ -
292	Wastewater Bypass Pumping, Operation, 6" - 10" diameter	10	DAY		$ -
293	Wastewater Bypass Pumping, Operation, 12" - 14" diameter	5	DAY		$ -
294	Wastewater Bypass Pumping, Operation, 15" - 21" diameter	5	DAY		$ -
295	Wastewater Bypass Pumping, Operation, 24" diameter	2	DAY		$ -
296	6" Dia. Pipe Gravity Sewer Point Repair (DI Replacement Pipe)	2	EA		$ -
297	6" Dia. Pipe Gravity Sewer Point Repair (PVC Replacement Pipe)	5	EA		$ -
298	8" Dia. Pipe Gravity Sewer Point Repair (DI Replacement Pipe)	2	EA		$ -
299	8" Dia. Pipe Gravity Sewer Point Repair (PVC Replacement Pipe)	5	EA		$ -
300	10" Dia. Pipe Gravity Sewer Point Repair (DI Replacement Pipe)	2	EA		$ -
301	10" Dia. Pipe Gravity Sewer Point Repair (PVC Replacement Pipe)	5	EA		$ -
302	12" Dia. Pipe Gravity Sewer Point Repair (DI Replacement Pipe)	2	EA		$ -
303	12" Dia. Pipe Gravity Sewer Point Repair (PVC Replacement Pipe)	5	EA		$ -
304	15"/16" Dia. Pipe Gravity Sewer Point Repair (DI Replacement Pipe)	2	EA		$ -
305	15"/16" Dia. Pipe Gravity Sewer Point Repair (PVC Rplacement Pipe)	2	EA		$ -
306	18" Dia. Pipe Gravity Sewer Point Repair (DI Replacement Pipe)	2	EA		$ -
307	18" Dia. Pipe Gravity Sewer Point Repair (PVC Replacement Pipe)	2	EA		$ -
308	21" Dia. Pipe Gravity Sewer Point Repair (DI Replacement Pipe)	2	EA		$ -
309	21" Dia. Pipe Gravity Sewer Point Repair(PVC Replacement Pipe)	2	EA		$ -
310	24" Dia. Pipe Gravity Sewer Point Repair (DI Replacement Pipe)	2	EA		$ -
311	24" Dia. Pipe Gravity Sewer Point Repair (PVC Replacement Pipe)	2	EA		$ -
312	6" Dia. Pipe Gravity Sewer Point Repair - Additional Length (DI Replacement Pipe)	20	LF		$ -
313	6" Dia. Pipe Gravity Sewer Point Repair - Additional Length (PVC Replacement Pipe)	50	LF		$ -
314	8" Dia. Pipe Gravity Sewer Point Repair - Additional Length (DI Replacement Pipe)	20	LF		$ -
315	8" Dia. Pipe Gravity Sewer Point Repair - Additional Length (PVC Replacement Pipe)	100	LF		$ -
316	10" Dia. Pipe Gravity Sewer Point Repair - Additional Length (DI Replacement Pipe)	20	LF		$ -
317	10" Dia. Pipe Gravity Sewer Point Repair - Additional Length (PVC Replacement Pipe)	100	LF		$ -

318	12" Dia. Pipe Gravity Sewer Point Repair Additional Length (DI Replacement Pipe)	50	LF		$ -
319	12" Dia. Pipe Gravity Sewer Point Repair - Additional Length (PVC Replacement Pipe)	20	LF		$ -
320	15"/16" Dia. Pipe Gravity Sewer Point Repair - Additional Length (DI Replacement Pipe)	20	LF		$ -
321	15"/16" Dia. Pipe Gravity Sewer Point Repair - Additional Length (PVC Replacement Pipe)	50	LF		$ -
322	18" Dia. Pipe Gravity Sewer Point Repair - Additional Length (DI Replacement Pipe)	20	LF		$ -
323	18" Dia. Pipe Gravity Sewer Point Repair - Additional Length (PVC Replacement Pipe)	50	LF		$ -
324	21" Dia. Pipe Gravity Sewer Point Repair - Additional Length (DI Replacement Pipe)	20	LF		$ -
325	21" Dia. Pipe Gravity Sewer Point Repair - Additional Length (PVC Replacement Pipe)	50	LF		$ -
326	24" Dia. Pipe Gravity Sewer Point Repair - Additional Length (DI Replacement Pipe)	20	LF		$ -
327	24" Dia. Pipe Gravity Sewer Point Repair - Additional Length (PVC Replacement Pipe)	50	LF		$ -
328	2" Dia. Pipe Forcemain Point Repair	3	EA		$ -
329	4" Dia. Pipe Forcemain Point Repair	3	EA		$ -
330	6" Dia. Pipe Forcemain Point Repair	3	EA		$ -
331	8" Dia. Pipe Forcemain Point Repair	3	EA		$ -
332	10" Dia. Pipe Forcemain Point Repair	2	EA		$ -
333	12" Dia. Pipe Forcemain Point Repair	2	EA		$ -
334	Replace Manhole Ring & Cover (Asphalt Pavement)	5	EA		$ -
335	Replace Manhole Ring & Cover (Unpaved)	5	EA		$ -
336	Manhole Bench Replacement, 4' Diameter	2	EA		$ -
337	Manhole Bench Replacement, 5' Diameter	2	EA		$ -
338	Manhole Bench Replacement, 6' Diameter	2	EA		$ -
339	Adjust Manhole Ring & Cover to Finished Grade (In Pavement)	5	EA		$ -
340	Adjust Manhole Ring & Cover to Finished Grade (Outside of Pavement)	5	EA		$ -
341	Flowable Concrete Fill	100	CY		$ -
342	Roadway Base, Lime Rock, Primed, Min. LBR 100, Variable Thickness	120	CY		$ -
343	Roadway Base, Crushed Concrete/Graded Aggregate, Min. LBR 100, Variable Thickness	120	CY		$ -
344	Superpave Asphalt Base, Type B 12.5, Variable Thickness	50	TN		$ -

345	Superpave Asphalt Concrete, Type SP 9.5, Fine, Traffic Level C, Variable Thickness	100	TN		$ -
346	Superpave Asphalt Concrete, Type SP 12.5, Fine, Traffic Level C, Variable Thickness	100	TN		$ -
347	Pavement, Cement Concrete, 6" Min Thickness (Driveways)	100	SY		$ -
348	Pavement, Cement Concrete, 8" Thick	100	SY		$ -
349	Driveway Restoration, In Kind, Decorative Block	50	SY		$ -
350	Milling Existing Asphalt Pavement, 1/2" Average Depth	150	SY		$ -
351	Milling Existing Asphalt Pavement, 3/4" Average Depth	150	SY		$ -
352	Milling Existing Asphalt Pavement, 1" Average Depth	150	SY		$ -
353	Curb & Gutter, Concrete, FDOT Type D	100	LF		$ -
354	Curb & Gutter Concrete, FDOT Type F	100	LF		$ -
355	Curb & Gutter, Concrete, Miami Curb	300	LF		$ -
356	Valley Gutter, Concrete, PCED Index 1315	100	LF		$ -
357	Sidewalk, Concrete, 4" Min. Thickness, Remove and Replace	500	SF		$ -
358	Sidewalk, Concrete, 6" Min. Thickness, Remove and Replace	500	SF		$ -
359	Sodding	4500	SF		$ -
360	Sectional Liner, 6" - 24" Pipe	50	EA		$ -
				SUBTOTAL - POINT REPAIRS	$ -
				GRAND TOTAL	$ 565,141.00

Bid quantities are for comparison purposes only.
This contract consists of various projects which are not yet defined and no quantities are guaranteed.



155 Corey Avenue
St. Pete Beach, FL 33706-1839
www.stpetebeach.org

ADDENDUM 1

Wastewater System Rehabilitation Services

Issued 3/23/2026

*Sealed bids must be received by **9:00 AM on 04/08/2026** electronically via Bonfire. Bids received after the deadline will not be accepted. They will be publicly opened and read at **10:00 AM on 04/08/2026**. All bidders are invited to attend this bid Opening.*

Addendum 1 includes:

Pre-bid Minutes
Questions and Answers

Optional - Pre-Bid Meeting Minutes
RFP: Wastewater System Rehab Services
March 18, 2026
11:00 AM

Staff Members Present:
Sara Spain, Procurement Manager
John Taylor, Assistant Finance Director
Camden Mills, Public Services Director
Brian Peckins, Assistant Public Services Director
Dejan Milosevic, Project Manager
Michael Weaver, Infrastructure Operations Manager
Brian Gelock, Public Services
Kenneth Kosbab, Public Services
Shawn Clark, Public Services
Ariana Wilson-Romo, Exec. Assistant City Clerk's Office

Others Present:

Name	***Company***	***Contact***
Abbey Boyle	PCS Civil	abbeyb@pcscivilinc.com
Chad Holmes	Tnemec	cholmes@tnemec.com
Chris Currie	Inliner Solutions	Chris.currie@puriscorp.com
Denise Davis	Gulf Coast Underground LLC	ddavis@gogcu.com
Tom Brown	Restoration & Protective Solutions	tom@rps.llc
Drew Giustina	Restoration & Protective Solutions	andrew@rps.llc
Emily Bennett	Insituform Technologies LLC	ebennett@azuria.com
Austen Wagoner	Engineered Coatings Solutions LLC	awagoner@ecscoatings.com
Tristan Hine	PCS Civil	tristanh@pcscivilinc.com
Kevin Rowland	Did not provide	Did not provide
Nolan Leal	Rowland DE LLC	nleal@acus-us.com
Mary Hortman	Inliner Solutions LLC	flbids@puriscorp.com
Sawyer Hill	Elite Industrial Painting Inc.	sawyer@eipainting.com
Kyle Matheny	Kimley Horn and Associates	Kyle.matheny@kimley-horn.com
Shawn Ready	Did not provide	Shawn.ready@vortexcompanies.com
Amanda Gonzalez	Kimley Horn and Associates	Amanda.gonzalez@kimley-horn.com
Bruno Sequeira	BCS Construction Group	bsequeira@bcsconstructiongrp.com
Bob Baker	Did not provide	Did not provide
Mark Cassineri	Inliner Solutions	Mark.cassineri@puriscorp.com
Shayna Agosta	Did not provide	sagosta@nwmcc.com

The meeting was called to order at 11:03 AM.

All attendees were present via Teams.

Ms. Spain briefly reviewed important dates and times which are as follows:

- Receipt of questions due 3/25 at 10AM
- Bids due 4/8 by 9AM
- Bid opening 4/8 at 10AM

She requested that any questions be submitted in writing to purchasing@stpetebeach.org. Questions will be answered via an addendum that will be posted to the City website and Bonfire.

Public Services Director Camden Mills summarized that this project will be for as-needed repairs to the City's wastewater collection system. Multiple vendors may be awarded.

The following questions were asked:
Q: Bid bond required? A: Will clarify via an addendum.
Q: Can previous bid tabulations for this project be shared? A:No bid tabs to provide, this is the first time the City has issued a project like this.
Q: Is there anticipated work already prepared? A: Yes, this can be shared via an addendum.
Q: Anticipated annual budget? A: Yes, will clarify in an addendum.
Q: Is there a self- performed percentage requirement? A: Will clarify via an addendum.
Q: Does the City need to be listed for proof of insurance? A: Yes.
Q: Can you provide the address exactly how it needs to be for the COIs? A: Yes.

Mr. Taylor clarified that this is bondable based on the project at that time, meaning a bid bond is not required to submit on this bid however it may be required based on project costs.

There being no additional questions, the meeting was adjourned at 11:16 AM.

Questions and Answers:

1. **Can you confirm if there are any DBE Requirements or good faith efforts to complete for this project? No. Because there are no federal funds nor does the City of St. Pete Beach include these requirements in the Procurement Ordinance, there are no DBE requirements.**
2. **Are there any SBEs/DBEs requirements? No. Because there are no federal funds nor does the City of St. Pete Beach include these requirements in the Procurement Ordinance, there are no SBE/DBE requirements.**
3. **Is a bid bond required? If so, what is the percentage? Yes, 5% of the total bid price.**
4. **What is the engineer's estimate / annual budget cost? Estimated $1,000,000 to $2,500,000 annually.**
5. **I was not able to locate a proposed budget for this project, would you happen to have that information available? Estimated $1,000,000 to $2,500,000 annually.**
6. **Are there any liquidated damages? Yes. If the work embraced by this Contract is not completed on or before the date set for completion or any extension thereof, the actual damages for the delay will be impossible to determine and in lieu thereof, the Contractor shall pay to the City fixed, agreed, and liquidated damages in the amount of either Five-Hundred Dollars ($500) per day for each calendar day of delay until the work is satisfactorily completed.**
7. **Hinterland Group respectfully request that Refratta's 100% pure-fused calcium aluminate coating be approved as an equal under that manhole rehabilitation specifications. Refratta's specs are attached for your review. The specifications for CIPP liner materials and manhole lining materials do not specify specific manufacturers and/or products for use under this contract. As specified in Specification Section 1.09, all materials, appliances, and types of construction shall be in accordance with the Technical Specifications.**
8. **Hinterland Group respectfully requests that Global Materials Company be approved as a CIPP liner manufacturer. Global specs are attached for your review. The specifications for CIPP liner materials and manhole lining materials do not specify specific manufacturers and/or products for use under this contract. As specified in Specification Section 1.09, all materials, appliances, and types of construction shall be in accordance with the Technical Specifications.**
9. **Is there a plan holders list for this project? Please see minutes with organizations present at the pre-bid meeting. The City of St. Pete Beach cannot see who has viewed the bid documents.**
10. **Do you have a plan holders list you could provide me for the above referenced bid? Please see minutes with organizations present at the pre-bid meeting. The City of St. Pete Beach cannot see who has viewed the bid documents.**
11. **Will the Owner/Engineer please provide a copy of the current plan holders list? Please see minutes with organizations present at the pre-bid meeting. The City of St. Pete Beach cannot see who has viewed the bid documents.**
12. **Will the Owner/Engineer please provide the anticipated annual spending for this contract to include each rehab division? Estimated $1,000,000 to $2,500,000 annually total.**
13. **Will the Engineer/Owner please provide previous itemized bid tabulation or contract pricing for each division/ contract? The City of St. Pete Beach does not have bid tabulations within the last 5 years.**
14. **Will the Owner/Engineer provide example work orders from previous contract periods? No.**

15. **Will the Owner provide a disposal site for pipe cleaning debris at no cost to the Contractor? Yes.**
16. **Will the Contractor be allowed to increase pricing from year 1 to subsequent years? Contract prices to remain firm through the first three contract years. Sixty days prior to the contract renewal date, contract/vendor may request a price adjustment.**
17. **Prebid question: Bid bond required? Yes, 5% of the total bid price.**
18. **Prebid question: Can previous bid tabulations for this project be shared? The City of St. Pete Beach does not have bid tabulations within the last 5 years.**
19. **Prebid question: Is there anticipated work already prepared? Bid form reflects anticipated work. City is underway with cleaning/televising entire wastewater collection system to analyze current conditions and will reprioritize if needed once that project is complete (estimated Dec 2026).**
20. **Prebid question: Anticipated annual budget? Estimated $1,000,000 to $2,500,000 annually.**
21. **Prebid question: Is there a self-performed percentage requirement? Yes, 100% Performance Bond.**
22. **Prebid question: Does the City need to be listed for proof of insurance? Yes**
23. **Prebid question: Can you provide the address exactly how it needs to be for the COIs?**
    City of St. Pete Beach
    155 Corey Avenue
    St. Pete Beach, FL 33706



155 Corey Avenue
St. Pete Beach, FL 33706-1839
www.stpetebeach.org

ADDENDUM 2

Wastewater System Rehabilitation Services

Issued 3/27/2026

*Sealed bids must be received by **9:00 AM on 04/08/2026** electronically via Bonfire. Bids received after the deadline will not be accepted. They will be publicly opened and read at **10:00 AM on 04/08/2026**. All bidders are invited to attend this bid Opening.*

Addendum 2 includes:

Questions and Answers

Questions and Answers:

1. **Is there a form to fill out for our sub-contractor for the bid submittal? Do I need to add anything for them with our bid? You are welcome to list them as a sub-contractor in your proposal, but there is no form. The sub-contractor is the contractor's financial responsibility.**

2. **Please clarify the Period of Performance in the General Contract Terms. This states base scope target completion of January 2027 while other parts of the RFP specify a three year contract. Three-year contract with options for up to (2) 1-year extensions for ongoing work.**

3. **Will any bonding be required? Yes, 5% total bid cost.**

4. **How will work be assigned on this contract? Will multiple contractors be assigned to a single project? Multiple contractors may be assigned to a single project, depending on scope required and contractor's abilities.**

5. **Is there an estimated yearly budget for this contract? $1M to $2.5M annually.**

6. **Are there any previous detailed, itemized bid tabs available for this or other similarly bid projects? Please see minutes with organizations present at the pre-bid meeting. The City of St. Pete Beach cannot see who has viewed the bid documents.**

7. **Is Item PL-50, (Grout, Gal) to be used in conjunction with items PL-47 through PL-49? Yes, please refer to the technical specifications. This pay item is applicable only in conjunction with Pay Items 47 through 49.**

8. **Can the owner add a Lateral Grouting, Per EA, Bid Item? Yes, pay item 55 has been added under pipe lining.**

9. **Does the owner have an annual budget for the Wastewater System Pipe (CIPP) Lining portion? No specific budget per portion.**

10. **In the addendum it says we need a 5% Bid Bond. Do you have a form to provide, or can our Surety use there's? We do not have a form. This would come from your surety company for the bond.**

11. **Several vendors have asked about using specific material manufacturers. The specifications for manhole lining materials do not specify specific manufacturers and/or products for use under this contract. As specified in Specification Section 1.09, all materials, appliances, and types of construction shall be in accordance with the Technical Specifications. Accordingly, bidders may base their bids on any manhole lining system that meets the performance and technical requirements of the specifications. Any proposed material or product will be subject to review for compliance with the Contract Documents through the submittal process after award.**

12. **In Addendum 1, there are contradicting answers for the bid bond needing to be submitted. On page 3 after the questions asked during the pre-bid, it states that it is bondable based on the project at that time, meaning a bid bond wasn't required to be submitted. On page 4 and 5, it states a bid bond of 5% is required to be submitted. Can you please clarify if a bid bond is required to be submitted with the proposal, and if so, what percentage is required? Discussion after the meeting led the City of St. Pete Beach to require a bid bond of 5% total bid cost, which must be submitted with the proposal.**

13. **Are alternate products being considered if they meet specification requirements of the proposed products? The specifications for manhole lining materials do not specify specific manufacturers and/or products for use under this contract. As specified in Specification Section 1.09, all materials, appliances, and types of construction shall be in accordance with the Technical Specifications. Accordingly, bidders may base their bids on any manhole lining system that meets the performance and technical requirements of the specifications. Any proposed material or product will be subject to review for compliance with the Contract Documents through the submittal process after award.**

14. **Do we have to fill out each individual section of the bid form, or can we bid the section that only pertains to our capabilities? See IV. General Contract Terms: It is not mandatory to submit a proposal for every item listed. A bidder may bid on any, all, or none of the items.**

15. **What is the anticipated work order size and how many work orders are anticipated to be issued annually? City anticipates issuing 3 purchase orders annually, 1 for each scope (pipe lining, point repairs, manhole rehabilitation), with multiple work orders per purchase order.**

16. **Will the work orders be issued in geographically grouped areas, or will the work be scattered across the City? Work orders will be issued in geographically grouped areas.**

17. **The RFP page 6 states "Vendors may submit proposals for all, some, or only one of the categories" and later "bidder may bid on any, all, or none of the items." Please confirm if bidders are required to bid all items with a category (Manhole Rehabilitation, Pipe Lining, and/or Point Repairs). You may bid certain line items only.**

18. **What are the allowable working hours? Standard work hours shall be from 7:30 AM until 6:00 PM, Monday through Saturday. No work shall take place on Sundays or on official City holidays without prior approval by the City Manager or designee at least 1 week prior to the scheduled work. A list of current official City holidays can be found on the City's Human Resources website at http://www.stpetebeach.org/hr/holidays.html. Contractor will coordinate scheduling of work with the City's Project Manager and City's Inspector.**

19. **Pipe Lining Item 15 for 6" Diameter CIPP shows a thickness of 6.0mm. This is not feasible for 6" diameter pipe and industry standard is 4.5mm. Please confirm 4.5mm will be acceptable for 6" diameter CIPP. 4.5mm is acceptable. This is acceptable. Pay item 15 has been updated accordingly.**

20. Regarding Mobilization bid item, please confirm this will be paid for each work order, and will not be paid only once per year. Please refer to the technical specifications. The quantity of mobilization to be paid for under this item shall be measured as one unit each (EA) per job assignment. One (1) mobilization will be allowed for each job assignment, project, or work order no matter how many times the equipment must be relocated by loading, transporting, and unloading, or under its own power to complete the job assignment or project. Payment for mobilization shall not exceed 10 percent (10%) of the total Contract cost unless the Contractor can prove to the City that his actual mobilization cost exceeds 10 percent (10%).

21. Section 2 Pay Item Descriptions for Mobilization includes "establishment of Subcontractor's temporary offices, buildings, …" Please confirm a temporary office or building is not required. Not required.

22. Section 2 Pay Item Descriptions for Bypass Pumping Setup & Operation states this "Pay Item is applicable on projects or repairs that have high flow or require an over night by pass operation." What is considered "high flow"? Will this item be paid for a "typical" bypass for an 8" diameter CIPP installation? Please elaborate on the requirements for this item and how it will be paid. These pay items apply when bypass pumping is needed to complete the repair without overflows. Pay item 26 would be used for bypass for an 8" diameter installation. The quantity to be measured for payment under this Pay Item will be the actual number of by-pass pumping set ups and operations, per part of day, required by the Engineer in the work. The minimum measurement for this pay item is eight (8) hours or 0.333 days and is measured from the time that the sewage is actually by-passed. This eight (8) hour minimum (0.333 days) includes full compensation for set up and operation for up to the first eight (8) hour period. Additional time will be in tenths of the day or twenty-four (24) hour period. The quantities determined shall be paid per day (DAY) or portion of day of by-pass pumping set up and operation.

23. The measurement for bypass also states the minimum measurement is 8 hours and will be paid for the first 8 hour period with additional time in tenths of a day. Please explain how this will be paid for say a 10 hour day. For example with $1,000/EA Setup and $500/Day: If a 10 hour day is being bypassed, will the contractor be paid the $1000 setup plus 2 hours (10-8 hours) / 24 hours x $1000 = $83.33 + $500 for a total of $1,583.33? In this scenario, payment would be total $1,216.50. ($1,000 setup + $500 operation x (0.333 day + 0.1 day))

24. Section 2 Pay Item Descriptions for CIPP Main Liner include cleaning and pre/post CCTV inspection. However, there are bid items for Normal Cleaning and Specialty Cleaning. Please confirm cleaning and pre CCTV inspection to prep the pipe for CIPP lining will be paid under the Normal Cleaning and/or Specialty Cleaning items, and is not incidental to CIPP Main Liner items. Cleaning and pre CCTV Cleaning and pre-CCTV inspection to prep the pipe for CIPP is incidental to CIPP main liner items. Payment shall include all materials, labor, equipment, and supplies necessary for the CIPP Main Liner installation, and specifically includes, but is not limited to, pre-rehabilitation CCTV inspection, liner sampling and storage of samples for testing, sealing liner connections at manholes, matching existing manhole lining to the CIPP

liner, matching existing flow channels and surfacing to the liner to minimize turbulence, cleaning, removal and disposal of all sand, rubble, deposits, and other accumulated debris after liner installation, post-rehabilitation CCTV inspection video and log, restoration, and all other appurtenant work as specified. Pay items 39-46 are for services requiring cleaning only.

25. Section 2 Pay Item Descriptions for Chemical Sealing of Host Pipe states this item will be paid for each pipe "regardless of…the number of infiltration points sealed." This currently reads that a pipe with one single joint with infiltration will be paid the same as a different pipe with 80 joints that all need to be sealed. Bidders have no way of knowing how many joints may be leaking on a particular segment which could drastically skew the pricing. Would you please consider revising this item to include Chemical Sealing of Host Pipe per Joint or per Service Connection? This pay item is to provide a cost for sealing excessively leaking infiltration points prior to lining of a host pipe. Revising this to a per-seal price would introduce the need to verify the number of leaking joints prior to approving a pay application following execution of the work. For tracking purposes, a flat-fee price will remain.

26. Section 2 Pay Item Descriptions for Service Reconnection states each service shall be grouted 18-inches into the lateral. Will this remain a requirement? If so, would you please consider adding Service Reconnection bid items per pipe diameter as there is substantial cost difference in grouting laterals per main diameter? Main diameter should not be a big factor, the lateral diameters are fairly consistent and the annular space volume will be dependent on the lateral diameter, not the main diameter. Pay item to remain as is.

27. The CIPP Spec (Section 21), paragraph 21.11.02 states up to 10% of the installed liners may be tested for exfiltration per ASTM F1216, Section 8.2 which is a hydrostatic pressure test. This test is not applicable to any line with services and adds unnecessary cost to the project as any potential defects will be verified via the post-rehab CCTV inspection. Would you please consider removing this unnecessary requirement which will ultimately create the most competitive pricing for the Owner? Section 21.11.02 specifies the testing is to be performed prior to any service lateral reconnections. Pay item to remain as-is.

28. Also, please accept SAK Construction, LLC as Installer and Pipenology, LLC as Manufacturer of CIPP Liners, in regards to the above referenced project. Per prequalification requirements on pages 1 and 2 of the Section 21 – CIPP Specification, please see attached documents for your review: SAK Company Information, CIPP Completed Project List, Pipenology CIPP Liner Submittal. The specifications for manhole lining materials do not specify specific manufacturers and/or products for use under this contract. As specified in Specification Section 1.09, all materials, appliances, and types of construction shall be in accordance with the Technical Specifications. Accordingly, bidders may base their bids on any manhole lining system that meets the performance and technical requirements of the specifications. Any proposed material or product will be subject to review for compliance with the Contract Documents through the submittal process after award.

29. **Can you please specify whether the minimum CIPP thicknesses are pre- or post- installation measurements?** Post-installation (finished-in-place) thickness.

30. **Will the Owner provide water, at no cost to the contractor, for work requiring water?** Yes.

155 Corey Avenue
St. Pete Beach, FL 33706-1839
www.stpetebeach.org

ADDENDUM 3

Wastewater System Rehabilitation Services

Issued 3/30/2026

*Sealed bids must be received by **9:00 AM on 04/08/2026** electronically via Bonfire. Bids received after the deadline will not be accepted. They will be publicly opened and read at **10:00 AM on 04/08/2026**. All bidders are invited to attend this bid Opening.*

Addendum 3 includes:

Questions and Answers

Questions and Answers:

Do we add all documents including the bid for (Price) to one PDF for submission? You may submit more than one document. They do not have to all be on one PDF.

For pay items 34-36 and pay items 40-42, the units are EA. Can you provide the depths of the manholes under "EACH" since this will significantly affect the price? Or can you change the units to VF as you have on the pay items for Additional MH Coating? 48" diameter manhole depths range from approx. 2 to 14 ft, with the majority between 4 and 6 ft.

EXHIBIT "D"

Conditional Federal/Grant-Funded Contract Addendum

(Place Conditional Federal/Grant-Funded Contract Addendum behind this page)

EXHIBIT "D"
CONDITIONAL FEDERAL/GRANT-FUNDED CONTRACT ADDENDUM

1. Applicability

1.1 This Exhibit applies only if activated under Section 25 of the Agreement or under a Task Order. If not activated, this Exhibit is reserved and has no operative effect.
1.2 If activated, this Exhibit supplements the Agreement and applies to the federally funded or grant-funded Work only. Contractor shall comply with all applicable requirements of the federal award, grant agreement, pass-through entity, program rules, and applicable law.
1.3 The City may provide additional award-specific clauses, certifications, forms, wage determinations, reporting requirements, or flow-down provisions. Contractor shall comply with such requirements as a condition of performing the affected Work and receiving payment from the applicable funding source.

2. Federal Award and Grant Information

Federal/Grant Program: [insert]
Federal Awarding Agency: [insert]
Pass-Through Entity: [insert, if applicable]
Assistance Listing Number: [insert, if applicable]
Federal Award Identification Number: [insert, if applicable]
Award or Disaster Declaration Date: [insert, if applicable]
Project Number: [insert]
Special Award Conditions: [insert or attach]

3. Remedies for Breach

For contracts exceeding the simplified acquisition threshold, Contractor acknowledges that the City may exercise all administrative, contractual, legal, and equitable remedies available under the Contract Documents and applicable law if Contractor violates or breaches contract terms. Remedies may include withholding payment, requiring correction, suspension of Work, termination, procurement from alternate sources, damages, sanctions, and any other appropriate remedy.

4. Termination for Cause and Convenience

For contracts in excess of $10,000, the City may terminate the federally funded or grant-funded Work for cause or convenience as provided in the Agreement. The notice of termination will identify the effective date and the manner of termination. Contractor shall be paid only for authorized Work satisfactorily performed before the effective date of termination, subject to documentation, offsets, allowable cost requirements, and applicable grant rules.

5. Equal Employment Opportunity

Except as otherwise provided under 41 C.F.R. Part 60, if the Work is a federally assisted construction contract as defined in 41 C.F.R. § 60-1.3, Contractor shall comply with the equal opportunity clause in 41 C.F.R. § 60-1.4(b), which is incorporated by reference as if fully set forth

RESERVED

herein, and shall include the required clause in covered subcontracts and purchase orders.

6. Davis-Bacon Act and Copeland Anti-Kickback Act

When required by federal program legislation, all prime construction contracts in excess of $2,000 must include compliance with the Davis-Bacon Act, 40 U.S.C. §§ 3141-3148, as supplemented by Department of Labor regulations at 29 C.F.R. Part 5. If Davis-Bacon applies, Contractor shall pay laborers and mechanics at rates not less than the applicable wage determination, pay wages not less than once per week, submit certified payrolls if required, and comply with all applicable labor standards.
If Davis-Bacon applies, Contractor shall also comply with the Copeland "Anti-Kickback" Act, 40 U.S.C. § 3145, as supplemented by 29 C.F.R. Part 3, and shall not induce any person employed in the construction, completion, or repair of public work to give up any part of compensation to which the person is entitled. Contractor shall report suspected or reported violations to the City.

7. Contract Work Hours and Safety Standards Act

Where applicable, for contracts in excess of $100,000 that involve the employment of mechanics or laborers, Contractor shall comply with 40 U.S.C. §§ 3702 and 3704, as supplemented by Department of Labor regulations at 29 C.F.R. Part 5. Contractor shall compute wages based on a standard 40-hour workweek and shall compensate covered workers at not less than one and one-half times the basic rate of pay for hours worked in excess of 40 hours in a workweek. No laborer or mechanic shall be required to work under unsanitary, hazardous, or dangerous conditions. These requirements do not apply to purchases of supplies, materials, or articles ordinarily available on the open market, or to contracts for transportation or transmission of intelligence.

8. Rights to Inventions

If the federal award meets the definition of "funding agreement" under 37 C.F.R. § 401.2(a), and the Work involves substitution of parties, assignment, or performance of experimental, developmental, or research work under that funding agreement, Contractor shall comply with 37 C.F.R. Part 401 and any implementing regulations issued by the awarding agency.

9. Clean Air Act and Federal Water Pollution Control Act

For contracts and subgrants exceeding $150,000, Contractor shall comply with all applicable standards, orders, and regulations issued pursuant to the Clean Air Act, 42 U.S.C. §§ 7401-7671q, and the Federal Water Pollution Control Act, 33 U.S.C. §§ 1251-1387. Contractor shall report each violation to the City, and the City will report violations as required to the federal awarding agency and the appropriate EPA regional office. Contractor shall include these requirements in each covered subcontract exceeding $150,000.

10. Debarment and Suspension

Contractor shall comply with Executive Orders 12549 and 12689 and 2 C.F.R. Part 180. Contractor shall not enter into covered transactions with parties listed on the governmentwide exclusions in the System for Award Management. Contractor shall verify that Contractor, its principals, and its affiliates are not excluded or disqualified and shall include this requirement in lower-tier covered

RESERVED

transactions.

11. Byrd Anti-Lobbying Amendment

For awards exceeding $100,000, Contractor shall comply with the Byrd Anti-Lobbying Amendment, 31 U.S.C. § 1352. Contractor shall certify that it has not and will not use federal appropriated funds to pay any person or organization for influencing or attempting to influence an officer or employee of an agency, a member of Congress, an officer or employee of Congress, or an employee of a member of Congress in connection with obtaining a federal contract, grant, or other covered award. Contractor shall disclose lobbying with non-federal funds as required and shall require each lower tier to make the same certification and disclosure.

12. Procurement of Recovered Materials

Contractor shall comply with 2 C.F.R. § 200.323 and Section 6002 of the Solid Waste Disposal Act, as amended by the Resource Conservation and Recovery Act, to the extent applicable. Contractor shall procure designated items containing the highest percentage of recovered materials practicable, consistent with competition and performance requirements, when the purchase price exceeds the applicable threshold or the value of the quantity acquired during the preceding fiscal year exceeded the applicable threshold. Contractor shall also procure solid waste management services in a manner that maximizes energy and resource recovery and shall support the City's affirmative procurement program where applicable.

13. Domestic Preferences for Procurements

As appropriate and to the extent consistent with law, Contractor shall comply with 2 C.F.R. § 200.322 by providing a preference for the purchase, acquisition, or use of goods, products, or materials produced in the United States, including iron, aluminum, steel, cement, and other manufactured products, when the Work is performed under a federal award.

14. Prohibition on Certain Telecommunications and Video Surveillance Equipment or Services

Contractor shall comply with 2 C.F.R. § 200.216 and shall not obligate or expend federal funds to procure, obtain, extend, renew, or enter into a contract to procure or obtain covered telecommunications equipment or services as a substantial or essential component of any system or as critical technology as part of any system. Contractor shall include this prohibition in applicable subcontracts and purchase orders.

15. Build America, Buy America

If the Work is an infrastructure project funded by a federal financial assistance program subject to the Build America, Buy America Act, Contractor shall comply with all applicable domestic content procurement preference requirements for iron, steel, manufactured products, and construction materials permanently incorporated into the project, unless a waiver applies. Contractor shall provide certifications, documentation, and product information required by the City, funding agency, or pass-through entity.

16. Small and Minority Businesses, Women's Business Enterprises, Veteran-Owned Businesses,

RESERVED

and Labor Surplus Area Firms

Contractor shall take the affirmative steps required by 2 C.F.R. § 200.321 to assure that small businesses, minority businesses, women's business enterprises, veteran-owned businesses, and labor surplus area firms are used when possible, including, as applicable, placing such businesses on solicitation lists, soliciting them when they are potential sources, dividing requirements when economically feasible, establishing delivery schedules that encourage participation, using appropriate assistance organizations, and requiring subcontractors to take the same affirmative steps.

17. Bonding Requirements for Federal Construction or Facility Improvement Contracts

For construction or facility improvement contracts or subcontracts exceeding the simplified acquisition threshold, Contractor shall comply with the bonding requirements in 2 C.F.R. § 200.326 when the federal award requires such bonding, including bid guarantee, performance bond, and payment bond requirements unless the federal agency or pass-through entity determines that the City's bonding policy and requirements adequately protect the federal interest.

18. Access to Records; Retention

Contractor shall provide the City, the federal awarding agency, the pass-through entity, the Comptroller General of the United States, and their authorized representatives access to any documents, papers, records, and other materials that are directly pertinent to the federal or grant-funded Work for the purpose of making audits, examinations, excerpts, and transcriptions. Contractor shall retain records for the period required by 2 C.F.R. Part 200, the award terms, the Agreement, and applicable law, whichever is longer.

19. No Obligation by Federal Government

The federal government is not a party to this Agreement or any Task Order and is not subject to any obligations or liabilities to the City, Contractor, or any other party arising from the Agreement or Work.

20. Program Fraud and False or Fraudulent Statements

Contractor acknowledges that 31 U.S.C. Chapter 38 and other federal laws concerning fraud, false claims, and false statements may apply to Contractor's actions pertaining to federally funded or grant-funded Work. Contractor shall not submit false, fictitious, fraudulent, or misleading claims, certifications, invoices, records, or statements.

21. Additional Award-Specific Terms

If the federal awarding agency, pass-through entity, grant agreement, disaster assistance program, or other funding source requires additional clauses, certifications, forms, reporting, wage determinations, environmental/historic preservation conditions, civil rights provisions, procurement certifications, or other requirements, such requirements are incorporated into the affected Task Order upon written notice by the City. Contractor shall execute additional documents reasonably required by the City to document compliance.

RESERVED

CITY COMMISSION MEETING
CITY OF ST. PETE BEACH
COMMISSION CHAMBERS

Agenda Report

Agenda Title Name: Authorize the City Manager to execute the Agreement with Rowland (DE), LLC for Wastewater System Rehabilitation Services on an as-needed basis in an amount not to exceed annually appropriated funding.

Action Request: Motion to authorize the City Manager to execute the Agreement with Rowland (DE), LLC for Wastewater System Rehabilitation Services on an as-needed basis in an amount not to exceed annually appropriated funding.

Strategic Objective: Reliable Infrastructure

Date: June 23, 2026

Prepared By: Camden Mills, Public Services Director

Through: Frances Robustelli, City Manager

Summary of Issue: The City publicly advertised a Request for Proposals (RFP) for Wastewater System Rehabilitation Services, including manhole rehabilitation, pipe lining, and point repairs. Fifteen (15) responsive proposals were received on April 8, 2026. Following evaluation, the City's selection committee recommended award to Flotech Environmental LLC, Hinterland Group, LLC, RCM Utilities, LLC, Rowland (DE), LLC, and SAK Construction, LLC based on the following criteria:

- Qualifications and Experience
- References and Past Performance
- Capacity to Perform the Work
- Cost

The contract provides not-to-exceed unit prices for wastewater system manhole rehabilitation, cured-in-place pipe (CIPP) lining, and point repairs on an as-needed basis, allowing the City to efficiently address defects identified through routine inspections, CCTV assessments, emergency response activities, regulatory requirements, and ongoing asset management programs.

Work will be authorized by task order on an as-needed basis in an amount not to exceed annually budgeted funding. The initial contract term is three (3) years with the option for two (2) additional one (1) year renewals upon mutual agreement and annual appropriation of funds.

Approval of this agreement will provide the City with qualified contractors to perform wastewater rehabilitation services that reduce inflow and infiltration, improve system reliability, extend asset service life, and support the City's wastewater capital improvement and maintenance programs.

Funding: 401.5350.565000 Wastewater Capital Improvements (remaining balance $2,746,041.85)

401.5350.546007 – Wastewater Repairs (remaining balance $279,990.50)

Attachments: 1. Rowland Services Agreement Signed

CITY OF ST. PETE BEACH, FLORIDA
SERVICES AGREEMENT

Wastewater System Rehabilitation Services

This is an Agreement (the "Agreement") entered into by and between the **CITY OF ST. PETE BEACH** (hereinafter "City") and **ROWLAND (DE), LLC** (hereinafter "Contractor"). The City and Contractor together shall be referred to as the "parties."

WHEREAS, The City properly issued a Request for Proposals, attached and incorporated hereto as Exhibit "B" and the City Commission authorized the selection of Contractor at its 06/23/2026, public hearing.

WHEREAS, City desires to purchase from Contractor the services described in this Agreement.

WHEREAS, Contractor is in the business of providing the services described herein, and has submitted an appropriate proposal to the City to provide the same.

WHEREAS, this Agreement has been properly approved by the appropriate authority of the City and the Contractor.

NOW, THEREFORE, upon the mutual covenants contained herein, and other good and valuable considerations, the sufficiency of which is hereby acknowledged, the parties hereto hereby agree to the following:

1. Recitals. The foregoing recitals are true and correct and incorporated herein by reference.

2. Standard Contract Addendum. The attached Standard Contract Addendum, which contains all the Florida Statutorily required provisions applicable to this Agreement, is attached hereto as Exhibit "A" and its provisions modify and supplement this Agreement.

3. Scope of Services. The Contractor must perform all work for the City required by the contract documents as set forth below:

a. Contractor will furnish all labor, materials, and equipment necessary as indicated in the Request for Bids (Exhibit "B") in the amount of Not To Exceed the Annual Budgeted amount. Funding will be awarded by Task Orders.

b. Contractor must supervise the workforce to ensure that all workers conduct themselves and perform their work in a safe and professional manner. Contractor must comply with all OSHA safety rules and regulations in the operation of equipment and in the performance of the work. Contractor must at all times have a competent field supervisor on the job site to enforce these policies and procedures at the Contractor's expense.

c. Contractor will provide the City with seventy-two (72) hours written notice prior to the beginning of work under this Agreement and prior to any schedule change with the exception of changes caused by inclement weather.

d. Contractor must comply with any and all Federal, State, and local laws and regulations

now in effect, or hereinafter enacted during the term of this Agreement, which are applicable to the Contractor, its employees, agents or subcontractors, if any, with respect to the work and services described herein. The Contractor further warrants that there has been no violation of copyrights or patent rights either in the United States of America or in foreign countries in connection with the work of the contract.

e. Contractor warrants to the City that all goods and materials furnished under the contract will be new unless otherwise specified and that contractor possesses good, clear, and marketable title to said goods and there are no pending liens, claims, or encumbrances whatsoever against said goods. All work not conforming to these requirements, including substitutions not properly approved and authorized may be considered defective. Contractor further warrants that all goods, materials and workmanship furnished, whether furnished by the Contractor or its subcontractors and suppliers, will comply with the specifications, drawings and other descriptions supplied or adopted. Last, Contractor warrants all material and workmanship for a minimum of (1) year from date of project completion and acceptancy by the City. If within one (1) year after acceptance by the City, or within such larger period of time as may be prescribed by law any of the work is found to be defective or not in accordance with the contract documents, the Contractor will, after receipt of a written notice from the City to do so, promptly correct the work.

4. Damages. Time is of the essence in the performance of this Agreement. City shall be entitled to liquidated damages in the amount of $500 per day, for each day after the date set forth in paragraph 10, that Contractor has failed to properly and completely deliver all goods or provide all service specified herein. The Contractor specifically acknowledges that the foregoing sum is reasonable and does not constitute a penalty.

5. Remedies.

   a. Damages. The City reserves the right to recover any ascertainable actual damages incurred as a result of the failure of the Contractor to perform in accordance with the requirements of this Agreement, or for losses sustained by the city resultant from the Contractor's failure to perform in accordance with the requirements of this Agreement.

   b. Correction of Work. If, in the judgment of the City, work provided by the Contractor does not conform to the requirements of this Agreement, or if the work exhibits poor workmanship, the city reserves the right to require that the Contractor correct all deficiencies in the work to bring the work into conformance without additional cost to the City, and/or replace any personnel who fail to perform in accordance with the requirements of this Agreement. The City is the sole judge of non-conformance and the quality of workmanship.

6. Waiver of Liens. Prior to final payment of the Contract Sum, a final waiver of lien must be submitted by all suppliers, subcontractors, and/or Contractors who worked on the project that is the subject of this Agreement.

7. Warranties.
   a. Warranty of Title. Contractor warrants to the City that all goods and materials furnished

under the contract will be new unless otherwise specified and that Contractor possesses good, clear, and marketable title to said goods and there are no pending liens, claims, or encumbrances whatsoever against said goods. All work not conforming to these requirements, including substitutions not properly approved and authorized may be considered defective.

b. Warranty of Specifications. The Contractor warrants that all goods, materials, workmanship furnished, whether by the Contractor or its subcontractors and suppliers, will comply with the specifications, drawings and other descriptions supplied or adopted.

c. Warranty of Merchantability. The Contractor warrants all material and workmanship for a minimum of one (1) year from date of project completion and acceptance by the City. If within one (1) year after acceptance by the city, or within such larger period of time as may be described by law any of the work is found to be defective or not in accordance with the contract documents, the Contractor must after receipt of a written notice from the City to do so, promptly correct the work unless the City has previously given the Contractor a written acceptance of such condition.

8. Term. This Agreement will remain in effect for a period of (3) three years with (2) two, (1) one-year extensions from the Effective Date.

9. Effective date. The "Effective Date" of this Agreement shall be the date this Agreement has been executed by all parties.

10. Termination. This Agreement may be canceled by the City when:
   a. Sufficient funds are not available to continue its full and faithful performance to the Agreement.
   b. Sub-standard or non-performance of Agreement.
   c. The City wishes to terminate the Agreement at any time and for any reason, upon giving thirty (30) days prior written notice to the Contractor.

11. Fiscal Non-funding. If funds for the requested services described herein are not appropriated via the annual budget adoption process, the City reserves the right to cancel the Agreement immediately upon written notice to the Contractor.

12. Non-Exclusivity. Contractor acknowledges that the City may enter into agreements with other consultants or may have its own employees complete the work for services similar to the services that are subject to this Agreement.

13. Compensation. Upon Contractor's satisfactory full performance of the services or in accordance with the payment schedule provided in the attached proposal, City shall pay Contractor, as full consideration for services provided in this Agreement.

14. Insurance. To the extent that this Agreement requires Contractor to provide any services of any kind, Contractor and all of Contractor's subcontractors shall maintain public liability insurance in a combined single limit for bodily injury and property damage in the amount of not less than $1,000,000.00, satisfactory to the City Manager, naming the City as an additionally named insured

and providing coverage up through and including the final performance of any services provided herein. Contractor and all of Contractor's subcontractors shall maintain in full force and effect a policy of worker's compensation insurance for all of Contractor's employees in accordance with applicable state and federal law. Said insurance coverage shall include employer's liability with a single limit of $100,000.00 per accident or occurrence. Contractor shall present City with a certificate for all the foregoing insurance, at the time of executing this Agreement and at such other times requested by the City.

The Contractor waives all rights against the City, its consultants, separate contractors, if any, and any of its subcontractors, agents and employees, for any and all damages caused to the extent covered by insurance described herein and obtained pursuant to this Section or other property insurance applicable to the services and product provided under this Agreement. The City shall require of the Contractor, Contractor's consultants, separate contractors, if any, and the subcontractors, sub-subcontractors, agents and employees of any of them, by appropriate agreements, written where legally required for validity, similar waivers each in favor of other parties enumerated herein. The policies shall provide such waiver of subrogation by endorsement otherwise. A waiver of subrogation shall be effective as to a person or entity even though that person or entity would otherwise have a duty of indemnification, contractual or otherwise, did not pay the insurance premium directly or indirectly, and whether or not the person or entity had an insurable interest in the property damaged.

15. Indemnification. In consideration of the payment of ten dollars as part of the compensation described herein, such sum being specifically found by Contractor to be sufficient consideration for this indemnification, Contractor shall indemnify, defend and hold the City harmless for itself, its past/present/future elected and appointed officials, its employees, agents and assigns, from and against any and all losses, claims, damages, suits, actions, liability or demands, including attorneys' fees and costs of litigation through all appellate proceedings, arising from the performance or non-performance of this Agreement, whether caused in part by the City or not, and in connection with violations of copyrighted or trademarked materials used by Contractor, loss of life, bodily or personal injury, or property damage, including loss of use thereof, directly or indirectly caused by, resulting from, arising out of or occurring in connection with the operations of the Contractor or its officers, employees, agents, subcontractors, or independent Contractors, excepting only such loss of life, bodily or personal injury, or property damage solely attributable to the gross negligence or willful misconduct of the City or its elected or appointed officials and employees. In any and all claims against the City, or any of their agents or employees by any employee of the Contractor any subcontractor, anyone directly or indirectly employed by any of them or anyone for whose acts any of them may be liable, the indemnification obligation under this paragraph is not limited in any way by any limitation in this amount or type of damages compensation or benefits payable by or for the Contractor or any subcontractor under Workers' Compensation Acts, Disability Benefit Acts or other Employee Benefit Acts. Nothing contained herein is intended nor may it be construed, to waive City's rights and immunities under the common law or Section 768.28, Florida Statutes, as amended from time to time; nor will anything included herein be construed as consent to be sued by any third parties in any matter arising out of this Agreement. To the extent considered necessary by the Contract Administrator and the City Attorney, any sums due Contractor under this Agreement may be retained by the City until all of the City's claims subject to this indemnification obligation have been settled or otherwise resolved,

and any amount withheld is not subject to payment of interest by the City. The above provisions will survive the termination or expiration of this Agreement and will pertain to any occurrence during the term of this Agreement, even though the claim may be made after the termination or expiration hereof.

16. Discriminatory Vendor List. Contractor hereby acknowledges its continuous duty to disclose to the City if the Contractor or any of its affiliates, as defined by Section 287.134 (1)(a), Florida Statutes, are placed on the Discriminatory Vendor List. Pursuant to Section 287-134 (2)(a), Florida Statutes: "An entity or affiliate who has been placed on the discriminatory vendor list may not submit a bid, proposal, or reply on a contract to a public entity; may not submit a bid or proposal, or reply on a contract with a public entity for the construction or repair of a public building or public work; may not submit bids, proposals, or replies on leases of real property to a public entity; may not be awarded or perform work as a contractor, supplier, subcontractor, or consultant under a contract with any public entity; and may not transact business with any public entity."

17. Independent Contractor. This Agreement does not create an employee/employer relationship between the parties. It is the intent of the parties that the Contractor is an independent contractor under this Agreement and not the City's employee for any purposes, including but not limited to, the application of the Fair Labor Standards Act minimum wage and overtime payments, Federal Insurance Contribution Act, the Social Security Act, the Federal Unemployment Tax Act, the provisions of the Internal Revenue Code, the State Worker's Compensation Act, and the State Unemployment Insurance law. The Contractor will retain sole and absolute discretion in the judgment of the manner and means of carrying out Contractor's activities and responsibilities hereunder provided, further that administrative procedures applicable to services rendered under this Agreement will be those of Contractor, which policies of Contractor will not conflict with City, State, or United States policies, rules, or regulations relating to the use of Contractor's funds provided for herein. The contractor agrees that it is a separate and independent enterprise from the City, that it had full opportunity to find other business, that it has made its own investment in it business, and that it will utilize a high level of skill necessary to perform the work. This Agreement must not be construed as creating any joint employment relationship between the Contractor and the City and the City will not be liable for any obligation incurred by Contractor, including but not limited to unpaid minimum wages and/or overtime premiums.

18. Audit Rights. The City reserves the right to audit the records of the Contractor for the commodities and/or serves provided under the contract at any time during the performance and term of the contract and for a period of five (5) years after completion and acceptance by the City. If required by the City, the Contractor agrees to submit to an audit by an independent certified public accountant selected by the City. The Contractor must allow the City to inspect, examine and review the records of the Contractor in relation to this Agreement at any an all times during normal business hours during the term of the Agreement.

19. Exhibits. The following Exhibits shall be attached, incorporated, and made a part of this Agreement:

a. Standard Contract Addendum (Exhibit "A")
b. Request for Bid/Proposal (Exhibit "B")

c. Vendor Bid/Proposal (Exhibit "C")
d. Conditional Federal/Grant-Funded Contract Addendum (Exhibit "D")

20. Notices. All notices sent pursuant to this Agreement shall be given in writing via certified mail or overnight courier and shall be delivered to the following addresses:

As to Contractor:
Rowland (DE), LLC.
8250 Bryan Dairy Rd. Ste. 100
Largo, FL 33777

As to City:
City Manager
City of St. Pete Beach
155 Corey Avenue
St. Pete Beach, FL 33706

With Copy To:
nleal@rowland-inc.com

With Copy To:
attorney@stpetebeach.org

21. Conflicts and Severability. To the extent that any terms in the attached proposal conflict with the terms of this Agreement, the terms of this Agreement shall control and supersede such conflicting terms in the attached proposal, to the extent of such conflict. If any section, part of section, paragraph, clause, phrase, or word of this Agreement is declared invalid, the remaining provisions of this Agreement shall not be affected.

22. Amendments. This document and exhibits embody the entire Agreement of the parties. There are no promises, terms, conditions, or representations binding on either party hereto, other than those contained herein; and this document shall supersede all previous communications, representations, and/or agreements between the parties hereto, whether written or oral. This Agreement shall not be modified by any oral statement, communication, Agreement, course of conduct, or by anything other than a writing signed by the parties. This Agreement may be amended or modified only in writing signed by all parties hereto.

23. Jurisdiction, Venue, Attorney Fees. This Agreement shall be governed and construed according to the laws of Florida, and venue for any action arising herefrom shall be in Pinellas County, Florida. The prevailing party in any action to enforce or interpret this Agreement shall be entitled to reasonable attorney's fees incurred through all appellate proceedings.

24. Assignment. This Agreement shall be binding upon the parties, their successors, assigns, and legal representatives. Contractor shall not assign or otherwise transfer any of the rights or duties under this Agreement, without the express written consent of the City.

25. Counterparts. This Agreement may be executed and delivered in any number of counterparts, each of which so executed and delivered shall be deemed to be an original and all of which shall constitute one and the same instrument. Facsimile, documents executed, scanned and transmitted electronically and electronic signatures shall be deemed original signatures for purposes of this Agreement and all matters related thereto, with such facsimile, scanned and electronic signatures having the same legal effect as original signatures.

26. Authority. Contractor hereby acknowledges that the person executing this Agreement on

behalf of Contractor has the full authority to do so and to bind Contractor to the terms hereof.

IN WITNESS WHEREOF, the Parties have executed this Agreement on the day and year set forth below.

Under penalties of perjury, and pursuant to Sec. 92.525, Fla. Stat., Contractor declares that Contractor has read the Section 15 of the Standard Contract Addendum, Exhibit "A", and that the facts stated in it are true.

Rowland (DE) LLC:

Signature: _____

By: Tim Roach

Its: COO

Date: 6/2/26

City of St. Pete Beach:

Signature: _____

By: Frances Robustelli

Its: City Manager

Date: _____

APPROVED AS TO FORM
AND LEGAL SUFFICIENCY:

_____
Ralf Brookes
City Attorney

ATTEST:

_____
Renee Rose
City Clerk

EXHIBIT "A"

Standard Contract Addendum

(Place Standard Contract Addendum behind this page)

CITY OF ST. PETE BEACH, FLORIDA
STANDARD CONTRACT ADDENDUM

THIS STANDARD CONTRACT ADDENDUM is made and entered into this _____ day of _____, 2026, by and between the CITY OF ST. PETE BEACH, a Florida municipality, hereinafter referred to as the "City", and _____, hereinafter referred to as "Contractor", concerning that certain agreement dated the ____ day of _____, 2026 ("Agreement") and titled _____.

WITNESSETH:

WHEREAS, Section 119.0701, Fla. Stat., requires that certain public agency contracts must include certain statutorily required provisions concerning the contractor's compliance for Florida's Public Records Act; and

WHEREAS, Section 768.28, Fla. Stat., sets forth certain mandatory limitations on indemnification and liability for Florida public agencies; and

WHEREAS, Florida law requires that public agency contracts be subject to non-appropriation and thereby contingent upon appropriation during the public agency's statutorily mandated annual budget approval process; and

WHEREAS, Section 448.095, Fla. Stat., imposes certain obligations on public agencies with regard to the use of the E-Verify system by their contractors and subcontractors; and

WHEREAS, Section 287.133 and 287.135, Fla. Stat., provides restrictions on local governments contracting with companies that are on certain Scrutinized Companies lists or convicted vendor list; and

WHEREAS, additional terms required by Sections 282.3185(5) and (6) Fla. Stat. related to data management and Section 287.05701 Fla. Stat. related to social government and corporate activism are also added by virtue of this Addendum; and

WHEREAS, Section 286.101, Florida Statutes contains a list of "foreign countries of concern" including, the People's Republic of China, the Russian Federation, the Islamic Republic of Iran, the Democratic People's Republic of Korea, the Republic of Cuba, the Venezuelan regime of Nicolás Maduro, or the Syrian Arab Republic, including any agency of or any other entity under significant control of such "foreign country of concern". Any entity that does business with a state agency or political subdivision must disclose certain of their dealings with those "foreign countries of concern" to the Florida Department of Financial Services; and

WHEREAS, Section 787.06(13), Fla. Stat. provides that when a contract is executed, renewed, or extended between a nongovernmental entity and a governmental entity, the nongovernmental entity must provide the governmental entity with an affidavit signed by an

officer or a representative of the nongovernmental entity under penalty of perjury attesting that the nongovernmental entity does not use coercion for labor or services as defined in such statute;

NOW, THEREFORE, in consideration of the covenants set forth herein, the parties agree to this addendum as follows:

1. Amendment. This Addendum hereby amends and supplements the terms of the Agreement. In the event of a conflict between the terms of the Agreement and terms of the Addendum, the terms of the Addendum shall prevail.

2. Public Records Compliance. Contractor agrees that, to the extent that it may "act on behalf" of the City within the meaning of Section 119.0701(1)(a), Florida Statutes in providing its services under this Agreement, it shall:

(a) Keep and maintain public records required by the public agency to perform the service.

(b) Upon request from the public agency's custodian of public records, provide the public agency with a copy of the requested records or allow the records to be inspected or copied within a reasonable time at a cost that does not exceed the cost provided in this chapter or as otherwise provided by law.

(c) Ensure that public records that are exempt or confidential and exempt from public records disclosure requirements are not disclosed except as authorized by law for the duration of the contract term and following completion of the contract if the contractor does not transfer the records to the public agency.

(d) Upon completion of the contract, transfer, at no cost, to the public agency all public records in possession of the contractor or keep and maintain public records required by the public agency to perform the service. If the contractor transfers all public records to the public agency upon completion of the contract, the contractor shall destroy any duplicate public records that are exempt or confidential and exempt from public records disclosure requirements. If the contractor keeps and maintains public records upon completion of the contract, the contractor shall meet all applicable requirements for retaining public records. All records stored electronically must be provided to the public agency, upon request from the City's custodian of public records, in a format that is compatible with the information technology systems of the City.

(e) Pursuant to Section 119.0701(2)(a), Fla. Stat., **IF THE CONTRACTOR HAS QUESTIONS REGARDING THE APPLICATION OF CHAPTER 119, FLORIDA STATUTES, TO THE CONTRACTOR'S DUTY TO PROVIDE PUBLIC RECORDS RELATING TO THIS AGREEMENT, CONTACT THE CUSTODIAN OF PUBLIC RECORDS AT:**

Renee Rose
City Clerk/Public Records Custodian
cityclerk@stpetebeach.org

Phone: 727-363-9220
155 Corey Avenue
St. Pete Beach, FL 33706
Fax: 727-541-8040

3. Public Records Compliance Indemnification. Contractor agrees to indemnify and hold the City harmless against any and all claims, damage awards, and causes of action arising from the contractor's failure to comply with the public records disclosure requirements of Section 119.07(1), Florida Statutes, or by contractor's failure to maintain public records that are exempt or confidential and exempt from the public records disclosure requirements, including, but not limited to, any third party claims or awards for attorneys' fees and costs arising therefrom. Contractor authorizes the public agency to seek declaratory, injunctive, or other appropriate relief against Contractor in Pinellas County Circuit Court on an expedited basis to enforce the requirements of this section.

4. Compliance/Consistency with Section 768.28, Fla. Stat. Any indemnification or agreement to defend or hold harmless by City specified in the Agreement shall not be construed as a waiver of City's sovereign immunity, and shall be limited to such indemnification and liability limits consistent with the requirements of Section 768.28, Fla. Stat. and subject to the procedural requirements set forth therein. Any other purported indemnification by City in the Agreement in derogation hereof shall be void and of no force or effect.

5. Non-appropriation. City's performance and obligation to pay under this Agreement is contingent upon an appropriation during the City's annual budget approval process. If funds are not appropriated for a fiscal year, then the Contractor shall be notified as soon as is practical by memorandum from the City Manager or designee that funds have not been appropriated for continuation of the Agreement, and the Agreement shall expire at the end of the fiscal year for which funding has been appropriated. The termination of the Agreement at fiscal year end shall be without penalty or expense to the City subject to the City paying all invoices for services rendered during the period the Agreement was funded by appropriations.

6. E-Verify Compliance. By entering into this Agreement, the Contractor is obligated to comply with the provisions of Section 448.095, Fla. Stat. "Employment Eligibility," as amended from time to time. This includes but is not limited to register with and use the E-Verify System to verify the work authorization status of all newly hired employees, and requiring all subcontractors to provide an affidavit to Contractor attesting that the subcontractor does not employ, contract with, or subcontract with, an unauthorized alien. Contractor agrees to maintain a copy of such affidavit for the duration of this Agreement. Failure to comply with this paragraph will result in the termination of this Agreement as provided in Section 448.095, Fla. Stat., as amended and Contractor will not be awarded a public contract for at least one (1) year after the date on which the Agreement was terminated. Contractor will also be liable for any additional costs to the City as a result of the termination of this Agreement in accordance with this paragraph. Contractor affirmatively states, under penalty of perjury, that in accordance with Section 448.095, Fla. Stat., Contractor is registered with and uses the E-Verify system to verify the work authorization status of all newly hired employees, that in accordance with such statute, Contractor requires from each of its subcontractors an affidavit stating that the subcontractor does not employ, contract with, or

subcontract with an unauthorized alien, and that Contractor is otherwise in compliance with Sections 448.09 and 448.095, Fla. Stat.

7. Compliance/Consistency with Scrutinized Companies Provisions of Florida Statutes. Section 287.135(2)(a), Fla. Stat., prohibits a company from bidding on, submitting a proposal for, or entering into or renewing a contract for goods or services of any amount if, at the time of contracting or renewal, the company is on the Scrutinized Companies that Boycott Israel List, created pursuant to Section 215.4725, Fla. Stat., or is engaged in a boycott of Israel. Section 287.135(2)(b), Fla. Stat., further prohibits a company from bidding on, submitting a proposal for, or entering into or renewing a contract for goods or services over one million dollars ($1,000,000) if, at the time of contracting or renewal, the company is on either the Scrutinized Companies with Activities in Sudan List or the Scrutinized Companies with Activities in the Iran Petroleum Energy Sector List, both created pursuant to section 215.473, Fla. Stat., or the company is engaged in business operations in Cuba or Syria. Contractor hereby certifies that Contractor is not listed on any of the following: (i) the Scrutinized Companies that Boycott Israel List, (ii) Scrutinized Companies with Activities in Sudan List, or (iii) the Scrutinized Companies with Activities in the Iran Petroleum Energy Sector List. Contractor further hereby certifies that Contractor is not engaged in a boycott of Israel or engaged in business operations in Cuba or Syria. Contractor understands that pursuant to section 287.135, Fla. Stat., the submission of a false certification may subject Contractor to civil penalties, attorney's fees, and/or costs. Contractor further understands that any contract with City for goods or services of any amount may be terminated at the option of City if Contractor (i) is found to have submitted a false certification, (ii) has been placed on the Scrutinized Companies that Boycott Israel List, or (iii) is engaged in a boycott of Israel. And, in addition to the foregoing, if the amount of the contract is one million dollars ($1,000,000) or more, the contract may be terminated at the option of City if the company is found to have submitted a false certification, has been placed on the Scrutinized Companies with Activities in Sudan List or the Scrutinized Companies with Activities in the Iran Petroleum Energy Sector List, or has been engaged in business operations in Cuba or Syria.

8. Disclosure Requirements for "Foreign Countries of Concern". CONTRACTOR shall comply with the disclosure requirements set forth is Section 286.101 (3) (a), Fla. Stat., which requires "Any entity that applies to a state agency or political subdivision for a grant or proposes having a contract value of $100,000 or more shall disclose to the state agency or political subdivision any current or prior interest of, any contract with, or any grant or gift received from a "foreign country of concern" if such interest, contract, grant or gift received from a "foreign country of concern" if such interest, contract, grant or gift has a value of $50,000 or more and such interest existed at any time or such contract, grant or gift was received or in force at any time during the previous five (5) years. Such disclosure shall contain the name and mailing address of the disclosing entity, the amount of the gift or the value of the interest disclosed, the applicable "foreign country of concern" and, if applicable the date of termination of the contract or interest, the date of receipt of the grant or gift and the name of the agent or controlled entity that is the source or interest holder. Within one (1) year before applying for any grant or proposing any contract, such entity must provide a copy of such disclosure to the Department of Financial Services". Pursuant to Section 286.101(7), Fla. Stat.: "In addition to any fine assessed under [section 286.101(7)(a), F.S.], a final order determining a third or subsequent violation by an entity other than a state agency or political subdivision shall automatically disqualify the entity from

eligibility for any grant or contract funded by a state agency or any political subdivision until such ineligibility is lifted by the Administration Commission for good cause."

9. Venue and Jurisdiction. Notwithstanding any of other provision to the contrary, this Agreement and the parties' actions under this Agreement shall be governed by and construed under the laws of the State of Florida, without reference to conflict of law principles. As a material condition of this Agreement, each Party hereby irrevocably and unconditionally: i) consents to submit and does submit to the jurisdiction of the Circuit Court in and for Pinellas County, Florida for any actions, suits or proceedings arising out of or relating to this Agreement. Both parties waive any right to file an action, suit or proceeding in Federal Court or remove any action, suit or proceeding to Federal Court.

10. Attorneys' Fees and Costs. Notwithstanding any of other provision to the contrary, if litigation ensues regarding this Agreement, each party hereto shall bear its own attorneys' fee and costs.

11. Public Entities Crime or Convicted Vendor List. Contractor agrees and assumes a continuous duty to disclose to the City if the Contractor or any of its affiliates as defined by Section 287.133(1)(a), Florida Statutes are placed on the Convicted Vendor List or the Antitrust Violator Vendor List maintained by the Florida Department of Management Services.

12. Data Management; Notice of Breach. Contractor shall cooperate with the City and provide timely incident reporting, response activities/fact gathering, public and agency notification, severity level assessment, after-action reports, etc., which the City must report in accordance with Sections 282.3185(5) & (6), Florida Statutes in the event of a data breach.

13. Environmental and Social Government and Corporate Activism. The City has not given preference or requested documentation from the Contractor based on Contractor's social, political or ideological interest. Contractor agrees to similarly not request documentation or give preference to any subcontractor based on the subcontractor's social, political or ideological interests.

14. Taxes. The City shall not be liable for any taxes and assessments imposed by a federal, state or local governmental agency to the extent that the City is exempt from same by Florida law, including but not limited to any sales or use tax.

15. No coercion for labor or services. The Contractor swears under penalty of perjury that the Contractor does not use coercion for labor or services as defined as follows:

"Coercion" means:

1. Using or threatening to use physical force against any person;
2. Restraining, isolating, or confining or threatening to restrain, isolate, or confine any person without lawful authority and against her or his will;
3. Using lending or other credit methods to establish a debt by any person when labor or services are pledged as a security for the debt, if the value of the labor or services as reasonably assessed is not applied toward the liquidation of the debt, the length and nature of the labor or services are not respectively limited and defined;

4. Destroying, concealing, removing, confiscating, withholding, or possessing any actual or purported passport, visa, or other immigration document, or any other actual or purported government identification document, of any person;

5. Causing or threatening to cause financial harm to any person;

6. Enticing or luring any person by fraud or deceit; or

7. Providing a controlled substance as outlined in Schedule I or Schedule II of Sec. 893.03, Fla. Stat. to any person for the purpose of exploitation of that person.

16. Force Majeure. The City reserves the right to suspend, modify or terminate this contract in the event of an act of god or act of man beyond the control of the parties, including but not limited to a hurricane, tropical storm, tornado, or other destructive weather event, flooding, pandemic, plague, war, armed conflict, domestic or foreign terrorism, riot, labor condition, state or federal governmental action, and catastrophic Internet disturbance, making performance inadvisable, economically impracticable, illegal, or impossible.

17. Additional Terms. Notwithstanding any of other provision to the contrary, the parties agree as follows:

A. None.

IN WITNESS WHEREOF, the parties hereto have executed and delivered this instrument on the days and year indicated below and the signatories below to bind the parties set forth herein.

Under penalties of perjury, and pursuant to Sec. 92.525, Fla. Stat., Contractor declares that Contractor has read the foregoing Section 15 above and that the facts stated in it are true.

Contractor:

_____

Print Name: Tim Roach

Title: COO

Company: Rowland (DE) LLC

ATTEST:

_____

Renee Rose, City Clerk

City of St. Pete Beach:

_____

Frances Robustelli, City Manager

EXHIBIT "B"

Request for Bid/Proposal

(Place Request for Bid/Proposal behind this page)

City of St Pete Beach
Request for Proposal

Wastewater System Rehabilitation Services

Timeline	Date	Time
Publication of Bid	03/11/2026	8:00 AM
Pre-Bid Meeting	03/18/2026	11:00 AM
Deadline for Question Submission	03/25/2026	10:00 AM
Submittal Deadline electronically via Bonfire	04/08/2026	9:00 AM
Submittal Opening	04/08/2026	10:00 AM

Submittals are due on or before
04/08/2026 at 9:00 AM EST
Electronically Via Bonfire Only

TABLE OF CONTENTS

I. INVITATION 3
II. STATEMENT OF WORK AND TECHNICAL SPECIFICATIONS 4
III. BID FORM 5
IV. GENERAL CONTRACT TERMS 6
V. REFERENCES & MINIMUM QUALIFICATIONS 17
VI. CONTRACTOR'S PROPOSAL SUBMITTAL 18
VII. PUBLIC ENTITY CRIMINAL AFFIDAVIT 19
VIII. NON-COLLUSION AFFADAVIT 21

I. INVITATION

The City of St Pete Beach has issued this Request for Proposal (RFP) to solicit competitive bids and proposals from Proposers for Wastewater System Rehabilitation Services, including manhole rehabilitation, pipe lining and point repairs.

The proposed work will be located within the City of St. Pete Beach in Pinellas County, FL, throughout the entire wastewater collection and transmission system. Each asset to be rehabilitated and the type of rehabilitation required will be identified in each individual Work Order with the location shown on corresponding geographical exhibits.

The successful proposer shall furnish all labor, superintendence, materials, power, light, heat, fuel, water, tools, appliances, equipment, supplies, shop drawings, working drawings and other means of construction necessary or proper for performing and completing the work. The Contractor is responsible for obtaining all required permits necessary for the work, including all applications and review fees, other than those permits which may have already been obtained. The Contractor shall perform and complete the work in a speedy and efficient manner consistent with safety of life and property and to the city's satisfaction, and in strict accordance with the Contract Documents. The Contractor shall repair or restore all structures and property damaged or disturbed during performance of the work.

The types of projects include:

- **Wastewater System Manhole Rehabilitation (Manhole Project):**
  The Contractor shall furnish all labor, material, equipment, and services necessary for manhole rehabilitation. The work shall be completed at various locations through the City's wastewater service area and shall include, but is not limited to, maintenance of traffic, temporary by-pass pumping and/or diversion of wastewater, cleaning, removal and disposal of all sand, rubble, deposits, and other accumulated debris, re-building manhole bench and channels, ring (frame) and cover adjustment and replacement, pavement restoration, inflow/infiltration elimination, surface preparation, cementitious and polymer coatings installation, internal chimney sealing, manhole cover insert installation, testing, project site cleanup and restoration, and all other incidentals as required and directed by the Engineer to complete the work.
- **Wastewater System Pipe Lining (Lining Project):**
  The Contractor shall furnish all labor, material, equipment, and services necessary for wastewater pipe rehabilitation using Cured-In-Place-Pipe (CIPP) lining. The work shall be completed at various locations through the City's wastewater service area and shall include, but is not limited to, maintenance of traffic, temporary by-pass pumping and/or diversion of wastewater, cleaning, removal and disposal of all sand, rubble, deposits, and other accumulated debris, CIPP liner installation, reconnection of service laterals, testing of CIPP liners, project site cleanup and restoration, and all other incidentals as required and directed by the Engineer to complete the work.
- **Wastewater System Point Repairs (Point Repair Project):**
  The Contractor shall furnish all labor, material, equipment, and services necessary for wastewater point repairs. The work shall be completed at various locations throughout the City's wastewater service area and shall include, but is not limited to, maintenance of traffic, temporary by-pass pumping and/or diversion of wastewater, dewatering, directional drilling, jack and boring, remove unsuitable materials below trench grade, sanitary sewer gravity and force main installation, force main and gravity main connections, remove out of service gravity and force mains, install manhole connections, grout out of service pipe, install valves and associated appurtenances, project site cleanup and restoration, and all other incidentals as required and directed by the Engineer to complete the work.

CONTACT INFORMATION
Procurement Manager – Sara Spain
Email – purchasing@stpetebeach.org

II. STATEMENT OF WORK AND TECHNICAL SPECIFICATIONS

See attached Technical Specifications Word document.

III. BID FORM

See attached Bid Form Excel document.

IV. GENERAL CONTRACT TERMS

REQUEST FOR PROPOSALS
Wastewater System Rehabilitation Services

REQUEST FOR PROPOSAL SUMMARY
The City of St Pete Beach has issued this Request for Proposal (RFP) to solicit competitive bids and proposals from Proposers for Wastewater System Rehabilitation Services, including manhole rehabilitation, pipe lining and point repairs.

The successful bidder shall provide all labor, materials, equipment, tools, consumables, transportation, and incidentals to provide Public Services capital improvement projects construction services on an 'as needed' basis for the City of St Pete Beach.

The "City" intends to **award multiple contracts** to vendors who can provide the best value for services. Vendors may submit proposals for all, some, or only one of the categories. **It is not mandatory to submit a proposal for every item listed**. A bidder may bid on any, all, or none of the items. The "City" reserves the right to select multiple vendors to optimize cost-efficiency and capability across different segments of the project. Proposals will be evaluated based on capability, cost, and capacity to perform the specific line items requested.

PROPOSAL SUBMITTALS
Proposal documents must include a signed/notarized Contractor's Proposal Submittal, Bid Form, References, Contractor's license and insurance certificates, and Public Entity Criminal Affidavit. The Contractor shall submit electronic proposals only. Bidders must submit electronically only through Bonfire platform. When bidding electronically, only one copy should be submitted.

Proposals shall include the following:

- A signed and notarized Proposer's Contract Proposal.
- Current proof of insurance certificate.
- A list of references and minimum qualifications as outlined in Section V.
- One copy of bid electronically submitted to Bonfire platform.

The City is not responsible for any Addendums or other supplementary information that is not received due to non-submittal of the aforementioned information. Please refer back to the city website (http://www.stpetebeach.org/news-and-links/city-projects.html) for additional project information as it becomes available. The City reserves the right to decide whether to answer addendums or not. The City is not required to provide any additional information.

Proposers or persons wishing to submit a proposal on this project shall be licensed, and insured in accordance with the City's requirements

The City of St. Pete Beach reserves the right to reject any or all proposals or parts of proposals, or accept any proposal or part thereof deemed to be in the best interests to the City of St. Pete Beach.

Electronic proposals must be submitted by **9:00 AM on April 08, 2026 (Deadline),** clearly marked as: **"Wastewater System Rehabilitation Services."**

PRE-PROPOSAL MEETING
An optional pre-proposal meeting will be held on **March 18, 2026 at 11:00 AM EST** via Microsoft Teams conference/Teleconference. Please contact the City's Procurement Manager (purchasing@stpetebeach.org) for a meeting invitation and instructions.

WRITTEN REQUESTS FOR INTERPRETATIONS/CLARIFICATIONS
No oral interpretations will be made to any firms as to the meaning of the scope of work or any other contract documents included in this **RFP.** All questions pertaining to the terms and conditions or scope of work of this Request for Proposal **(RFP)** must be sent in writing via email only to the City Procurement Manager (purchasing@stpetebeach.org) and shall be received no later than **10:00 AM EST on March 25, 2026.** Responses to questions may be handled as an Addendum if the response would provide clarification to the requirements of the **RFP**. All such Addenda shall become a part of the contract documents. The City will not be responsible for any other explanation or interpretation of the proposed **RFP** made or given prior to the award of the contract. The City will not respond to questions received after the specified deadline. The City reserves the right to respond to any and all questions but is not required to do so. If the Proposer discovered the opportunity through the online platform (Bonfire), do not submit questions through these platforms. **Only questions emailed directly to the City Procurement Manager will be answered.**

BEGINNING DATE
The Proposer shall, within ten (10) business days after receipt of the Notice of Award and before commencement of any operations hereunder, execute the Agreement. Additionally, the Proposer shall, within twenty (20) business days after receipt of the Notice of Award, provide all required documentation to the City.

COMPLETION OF WORK
The work will be completed on an as-needed basis. Each location that needs to be surveyed, repaired and/or worked on will constitute it's own "job". This will be a three (3) year initial contract with the option to be extended for two (2) additional one (1) year periods upon mutual consent of both parties. It is the intent of the City of St Pete Beach to award these services to more than one Contractor/Vendor.

COSTS INCURRED BY PROPOSERS
All expenses involved with the preparation and submission of proposals to the City, or any work performed in connection therewith, shall be borne solely by the Proposers. No payment will be made for any responses received or for any other effort required of or made by; the Proposer's prior to contract commencement.

ORAL PRESENTATION
The City may require an oral presentation of the proposal at the Evaluation Committee's discretion. This could also include a formal interview of any and all members of the Proposer's contract management staff.

CONFLICT OF INTEREST
The Proposer represents that it presently has no interest and shall acquire no interest, either direct or indirect, which would conflict in any manner with the performance or services required hereunder, as provided for in FL Stat. 112.311. The Proposer further represents that no person having any interest shall be employed for said performance.

The Proposer shall promptly notify the City's representative, in writing, by certified mail, of all potential conflicts of interest for any prospective business association, interest, or other circumstance, which may influence or appear to influence the contractor's judgment or quality of services being provided hereunder. Such written notification shall identify the prospective business association, interest or circumstance, the nature of work that the Proposer may undertake and request an opinion of the city as to whether the association, interest or circumstance would, in the opinion of the City, constitute a conflict of interest if entered into by the Proposer. The City agrees to notify the Proposer of its opinion by certified mail within thirty days of receipt of notification by the Proposer.

LATE PROPOSAL OR MODIFICATIONS
Modifications in writing received prior to the time set for the proposal submittal will be accepted. Proposal modifications received after the time set for the proposal submittal will not be considered.

RELATED PARTIES AND MULTIPLE PROPOSALS
Where two (2) or more related parties each submit a proposal or multiple proposals are received from (1) Proposer, for any such contract, such proposals shall be judged non-responsive. Related parties mean Proposers or the principles thereof, which have a direct or indirect ownership interest in another Proposer for the same contract or in which a parent company or the principles thereof where one (1) Proposer has a direct ownership interest in another Proposer for the same contract.

RIGHT TO AUDIT
The City of St. Pete Beach reserves the privilege of auditing a Proposer's record as such records relate to purchases or work between the City and said Proposer. Records should be maintained for three years from contract date.

VARIANCE FROM STANDARD TERMS & CONDITIONS
All standard terms and conditions stated throughout the RFP apply to this contract except as specifically stated. This should be fully understood by Proposers prior to submitting a proposal.

ASSIGNMENT
The Proposer shall perform this contract. No assignment or subcontracting shall be allowed without prior written consent of the City. If a Proposer intends to subcontract a portion of this work, the Proposer must disclose that intent in the proposal. In the event of a corporate acquisition and/or merger, the Contractor shall provide written notice to the City within thirty (30) business days of Proposer's notice of such action or upon the occurrence of said action, whichever occurs first. The right to terminate this contract, which shall not be unreasonably exercised by the City shall include but not be limited to, instances in which a corporate acquisition and/or merger represent a conflict of interest or are contrary to any local, state, or federal laws. Action by the City awarding a proposal to a firm that has disclosed its intent to assign or subcontract in its response to the RFP, without exception shall constitute approval for purpose of this Agreement.

LOBBYING Lobbying of Evaluation Committee members, City employees, or elected officials regarding request for proposals, request for qualifications, bids or contracts, during the pendency of bid award or bid protest, by the bidder/proposer/protestor or any member of the bidder's/proposer's/protestor's staff, an agent of the bidder/proposer/protestor, or any person employed by any legal entity affiliated with representing an organization that is responding to the request for proposal, request for qualification, bid or contract, or has a pending bid protest is strictly prohibited either upon advertisement or on a date established by the City and shall be prohibited until either an award is final or the protest is finally resolved by the City Manager or Procurement Manager; provided, however, nothing herein shall prohibit a prospective bidder/proposer from contacting City departments to address situations such as clarification and/or questions related to the procurement process. For purposes of this provision, lobbying activities shall include but not be limited to, influencing or attempting to influence action or non-action in connection with any requests for proposal, request for qualification, bid or contract through direct or indirect oral or written communication or an attempt to obtain goodwill of persons and/or entities specified in this provision. Such actions may cause any request for proposal, request for qualification, bid or contract to be rejected.

ADDITIONAL REQUIREMENTS
The City reserves the right, by change order, to unilaterally add or delete locations/services, either collectively or individually, at the City's sole option, at any time after award has been made as may be deemed necessary or in the best interest of the City. In such case, the Proposer will be required to provide or reduce services to this contract in accordance with the terms, conditions, and specifications.

SERVICES AGREEMENT
A written agreement incorporating the RFP and the successful proposal will be prepared by the City, signed by the successful Proposer, and presented to the City Commission for approval and signature.

INTEGRITY OF REQUEST FOR PROPOSAL DOCUMENTS
Proposers shall use the original RFP forms provided within the RFP and enter information in the spaces where a response is requested. Proposers may use an attachment as an addendum to the RFP forms if sufficient space is not available on the original form for the Proposer to enter a complete response. Any modifications or alterations to the original RFP documents by the Proposer, whether intentional or otherwise, will constitute grounds for rejection of the RFP. Any such modifications or alterations a Proposer wishes to propose must clearly be stated in the Proposer's RFP response and presented in the form of an addendum to the original RFP documents.

RESPONSIBILITY OF THE CITY MANAGER OR DESIGNEE
The term "City Manager or designee" wherever used in this Contract shall be the City of St. Pete Beach or its duly authorized representative. Notices of any change in the City Manager or designee shall be given in writing by the City to the Contractor. The City Manager or designee shall have full authority to interpret the contract and requirements and shall determine acceptance of the work under this Contract and every question relative to the fulfillment of the terms and provisions therein. It shall be the duty of the City Manager or designee to enforce the contract terms in a fair and unbiased manner.
If a variation from any requirements is allowed, the City Manager or designee shall grant the same in writing with the reasons for his action outlined, and such action will not invalidate or change the Contract in any other manner.

EXAMINATION OF SITE
Proposer shall carefully examine project site and be familiar with the work required for the project, investigate all site conditions that may affect execution of work as detailed in the construction documents. Contact the City's Procurement Manager or their designee for changes or alterations before proceeding.

ASSURANCES
The responding Proposer shall provide a statement of assurance that the Proposer is not presently in violation of any statutes or regulatory rules that might have an impact on the firm's operations. All applicable laws and regulations of the State of Florida, and ordinances and regulations of the City of St. Pete Beach will apply.

ASSIGNMENT AND TRANSFER OF CONTRACT
The Proposer shall not assign or transfer this Agreement or any part thereof or any interest therein without consent in writing of the City and the Proposer's Surety, and any such assignment or transfer without such written consent shall be null and void.

SUBCONTRACTS
The Proposer shall not subcontract this Agreement or any part thereof or any interest therein without consent in writing of the City and the Proposer's Surety. Any Subcontractor approved by the City will be subject to the same standards and qualifications as stated in this Contract.

PAYMENT
Payment shall be made to the Proposer for work performed under this Contract for the quantities of work as determined in accordance with Payments for Work Completed and Payments Withheld of this Contract. Payment for extra work will be made in accordance with the Changes in Work, Contract Amount, and Contract Time sections below.

PERIOD OF PERFORMANCE
The target completion for the base Scope of Services is January 2027, corresponding to delivery of the Design-Build Readiness Package. The City reserves the right, at its sole discretion and subject to funding

availability, to amend this Agreement to extend the Consultant's services through final (100%) design. Any additional services shall be authorized by written amendment and negotiated in accordance with the Consultants' Competitive Negotiation Act (Section 287.055, Florida Statutes).

CHANGES IN THE WORK

Without invalidating the Contract, the City may, at any time or from time to time, order additions, deletions or revisions in the work authorized by written Change Orders or directives. Upon receipt of a Change Order, the Proposer will proceed with the work involved. All such work shall be executed under the applicable conditions of the Contract documents. If any Change Order causes an increase or decrease in the Contract Amount or any extension or shortening of the Contract Time, an equitable adjustment will be made.

Additional Work performed by the Proposer without authorization of a Change Order will not entitle them to an increase in the Contract Amount or any extension of the Contract Time, except in the case of an emergency (subject to approval by City Manager or designee).

It is the Proposer's responsibility to notify their Surety of any changes affecting the general scope of the Work or change of the Contract Amount and the amount of the applicable bonds shall be adjusted accordingly, and an amended bond document furnished to the City. In the event the City directs the Proposer to make a change in the Work, and if the City and the Proposer do not arrive at a mutually acceptable increase or decrease in the Contract Amount, the Proposer shall not use any such lack of mutual acceptance as a basis or cause to stop or otherwise delay the progress or the execution and completion of any of the work ordered, directed or required pursuant to the Contract Documents.

If the Proposer believes an event or situation has occurred which justifies a change in the Contract Amount or Contract Time, they shall deliver a written notice to the City Manager or designee. Each such written notice shall be delivered promptly and no later than fifteen (15) business days after the Proposer first discovered the occurrence. The Proposer shall be deemed to have waived the right to collect any and all costs incurred more than fifteen (15) business days prior to the date of delivery of the written notice and shall be deemed to have waived the right to seek an extension of the Contract Time with respect to any delay in the Progress Schedule which accrued more than fifteen (15) business days prior to the date of delivery of the written notice.

Any such notice shall include sufficient detail to explain the basis of entitlement to a claim for an adjustment to the Contract Amount of Contract Time. When requested by the City Manager or designee, the Proposer shall furnish any additional information and details as may be required to determine the facts or allegations involved, which shall be provided within fifteen (15) business days of the request unless a longer time period is allowed by the City Manager or designee.

The Proposer shall prepare proposals detailing proposed adjustments to Contract Amount and/or Contract Time and submit them to the City Manager or designee within fifteen (15) business days of the City's issuance of a proposed Change Order or the Proposer's submitting a written notice of a change or claim for an adjustment to the Contract Amount or Contract Time. Proposer's proposals shall be irrevocable for a period of at least sixty (60) business days after receipt by the City. Any delay in the submittal of a complete, adequate and acceptable proposal will not justify an increase in Contract Amount or Contract Time. Proposer agrees that it shall give the City access to any and all of Proposer's and Subcontractors' books, records and other materials relating to proposed Change Orders and other claims for adjustment to Contract Amount or Contract Time.

CHANGE OF CONTRACT AMOUNT

The Contract Amount constitutes the total compensation payable to the Proposer for performing the Work. All duties, responsibilities and obligations assigned to or undertaken by the Proposer shall be at his expense

without change in the Contract Amount. The Contract Amount may only be changed by written Change Order issued by the City. Any claim for an increase in the Contract Amount shall be in writing and delivered to the City Manager or designee within fifteen (15) business days of the occurrence of the event giving rise to the claim.

All claims for adjustment in the Contract Amount shall be determined by the City Manager or designee. However, no claim for an adjustment to the Contract Amount will be considered for unforeseeable causes that were beyond the fault or negligence of the Proposer or his Subcontractors or supplier such as acts of God, floods, riots, etc. This restriction does not restrict submission of claims for additional Contract Time due to events of this nature. Any change in the Contract Amount shall be incorporated in a Change Order.

Proposer proposals or claims shall cover all aspects of the Work involved and shall be fully documented and itemized as to all costs, quantities and charges for overhead and profit. Amounts for Subcontractors or Suppliers at any tier shall be similarly supported. When determining Subcontractors' costs, the methods to be used shall be those used for the Proposer's costs, except that the term "Subcontractor" shall replace the term "Proposer," context permitting.

The value of any Work covered by a Change Order or of any claim for an increase or decrease in the Contract Amount where the Work involved is covered by unit prices contained in the Contract Documents shall be determined by application of unit prices to the quantities of the items involved. If the quantities originally contemplated are so changed in a proposed Change Order, that application of the Unit Prices to the quantities proposed will cause substantial inequity to the City or the Proposer, the applicable unit price(s) shall be equitably adjusted by mutual agreement.

If the value of work covered by a Change Order cannot be established or mutually agreed to utilizing previously established unit rates, the value shall be determined by the City on the basis of an estimate of the out-of-pocket cost and percentages that are acceptable to the City for overhead and profit.

In such case, the Proposer will submit in the form prescribed by the City an itemized cost breakdown together with supporting data.

The amount of credit to be allowed by the Proposer to the City for any such change which results in a net decrease in cost, will be the amount of the actual net decrease as determined by the City. When both additions and credits are involved in any one change, the combined overhead and profit shall be figured on the basis of the net increase, if any.

CHANGE OF CONTRACT TIME

The Contract Time may only be changed by written Change Order. Any claim for an extension in the Contract Time shall be in writing and include an analysis of the Progress Schedule as further described in the Specifications and shall be delivered to the City Manager or designee within fifteen (15) business days of the occurrence of the event giving rise to the claim. All claims for adjustment in the Contract Time shall be determined by the City Manager or designee. Any change in the Contract Time resulting from any such claim shall be incorporated in a Change Order. The Contract Time may be extended for an amount equal to time lost due to unforeseeable causes beyond the control of the Proposer (and his Subcontractors and Suppliers) if he makes a claim therefrom. Such delays shall include, but not be restricted to, acts or neglect by any separate Proposer employed by the City; fires; floods; labor disputes; epidemics; or acts of God.

All time limits stated in the Contract Documents are of the essence to the Contract. The stated time limits are agreed to be adequate to complete the work, including the procurement, manufacture and delivery of all material and equipment required, and account for any and all potential impact, delays, disruptions and costs that may be expected.

PAYMENTS FOR WORK COMPLETED
All payments under this agreement shall comply with the requirements of Florida Statutes, Section 215.422, commonly referred to as the "Prompt Payment Law." This includes timely processing of invoices and adherence to statutory interest provisions for late payments. The Contractor shall submit detailed invoices for services rendered under this agreement. Each invoice must include: Purchase Order or Contract Number, Description of services provided, Dates of service, Total amount due. Payment will be made within 45 days of receipt of a proper invoice and acceptance of deliverables, as required by Florida law. If payment is not made within the statutory timeframe, interest penalties will apply in accordance with Section 215.422, Florida Statutes. Payments will be issued via electronic funds transfer (EFT) unless otherwise agreed in writing. Contractor must provide accurate banking information to facilitate EFT.

PAYMENTS WITHHELD
The City Manager or designee may withhold, or, on account of subsequently discovered evidence, nullify the whole or part of any estimate to such extent as may be necessary to protect the City from loss on account of:

a) Defective work not remedied

b) Claims and/or liens filed or reasonable evidence indicating probable filing of claims

c) Failure of the Proposer to make payments properly to Subcontractors or for labor

d) A reasonable doubt that the Contract can be completed for the balance then unpaid

e) Damage to another Proposer

f) Failure of the Proposer to keep their work progressing in accordance with their time schedule

FINAL PAYMENTS
Upon the completion and acceptance of the work, the City Manager or designee shall issue a certificate that designates that the whole work provided for in this Contract has been completed and accepted by him under the conditions and the terms thereof and shall make the final estimate of the work. After issuance of the certificate, the entire balance found to be due the Proposer, including said retained percentage by the City in accordance with existing state laws as may be retained lawfully by said City, shall pay excepting such sums to the Proposer.

Before the approval of the final payment, the Proposer shall submit evidence satisfactory to the City that states that all payrolls, materials, bills and outstanding indebtedness in connection with this Contract have been paid.

LIENS
If at any time there shall be evidence of any lien or claim for which the City might become liable and which is chargeable to the Proposer, the City shall have the right to retain out of any payment then due or thereafter to become due, an amount sufficient for complete indemnification against such lien or claim. In the event the City has already paid to the Proposer all sums due under this contract or the balance remaining unpaid is insufficient to protect the City, the Proposer and his Surety shall be liable to the City for any loss so sustained.

RESPONSIBILITY OF THE CITY MANAGER OR DESIGNEE
The term "City Manager or designee" wherever used in the Contract shall be the City of St. Pete Beach or its duly authorized representative. Notices of any change in the City Manager or designee shall be given in writing by the City to the Proposer. The City Manager or designee shall have full authority to interpret the Plans and Specifications and shall determine the amount, quality, and acceptance of the work and supplies

to be paid for under the Contract and every question relative to the fulfillment of the terms and provisions therein. It shall be the duty of the City Manager or designee to enforce the Plans and Specifications in a fair and unbiased manner. If a variation from any requirements is allowed the City Manager or designee shall grant the same in writing with the reasons for his action outlined, and such action will not invalidate or change the Contract in any other manner.

LICENSES AND PERMITS

The Proposer shall obtain and pay for all necessary City licenses and work permits and shall faithfully comply with all laws, ordinances and regulations, (Federal, State or local) which may be applicable to the operations to be conducted hereunder, except for those permits obtained by the City. Notwithstanding the provisions above, the Proposer is responsible for non-compliance of all permit requirements, including all fines resulting from Proposer's non-compliance of said requirements.

Chapter II, Section II-4, "Registration of Licenses Obtained From Other Municipalities:" "Persons, partnerships, corporations, or other business entities doing business with the City who are not required to obtain a City occupational license, but who must have either a State or County or Municipal occupational license from another municipality, shall register such occupational license with St. Pete Beach Community Development Department. The City may charge a fee for such registration." The Proposer shall be responsible for obtaining all City, County, State and Federal permits required by those government agencies and must provide documentation of receipt of those permits prior to project commencement. This shall include a notice to commence work letter and the applicable fee, if required. Any sub-contractor hired by the Proposer awarded the project, MUST also register their license with the City.

LABOR PROVISIONS

The Proposer and his Subcontractors shall discharge, whenever ordered to do so by the City Manager or designee, any employee who is disorderly or whose conduct in the opinion of the City Manager or designee is detrimental to the prosecution of the work. No person whose age or physical condition is such as to make this employment dangerous to his/her health and safety or to the health and safety of others shall be employed on the work, and in no event shall any persons under the age of sixteen (16) years be employed. The State of Florida prevailing wage law requires that the Proposer shall fully comply with all provisions contained in Section 215.19, "Schedule of Prevailing Wage Rates for Specified Public Construction." The wage rates set forth by such determination shall apply to this project.

INSURANCE

The Proposer shall procure and maintain at his/her own expense, during the life of the Contract, liability insurance as hereinafter specified. All such insurance shall be subject to the approval of the City for adequacy of protection and shall include a provision preventing cancellation without twenty (20) business days prior notice to the City in writing. The City shall be included as an additional insured on all liability insurance. The liability insurance required is as follows: Proposer's General Public Liability and Property Damage Insurance issued to the Proposer and protecting the Proposer from all claims for personal injury, including death, and all claims for destruction of or damage to property, arising out of or in connection with any operations under this Contract, whether such operations be by the Proposer or by any Subcontractor hired by the Proposer or anyone directly or indirectly employed by the Proposer or hired by the Proposer.

The successful Proposer shall supply and maintain insurance which defends, indemnifies and holds harmless the City of St. Pete Beach, its officers, employees and agents from and against any and all liability, damage claims, demands, costs, judgments, fees, attorney's fees or loss arising directly out of acts or omissions hereunder by the Proposer or third party under the direction or control of the Proposer. Such general and excess liability coverage shall be primary to any other coverage carried by the City of St Pete Beach. Proposer must furnish the City with Certificate of Insurance prior to commencement of work. An

approved Certificate of Insurance furnished by the Proposer's carrier to guarantee the Proposer being insured with the City of St Pete Beach must be named as a certificate holder for this contract. The following minimum coverage:

- Professional Liability Insurance $2,000,000 each occurrence.
- Commercial General Liability Insurance $1,000,000.00.
- Comprehensive General Liability Insurance of $1,000,000.00 each occurrence.
- Personal Injury for $1,000,000.00 each occurrence.
- Automobile Liability $1,000,000.00.
- General Workers Compensation Insurance as required by Florida law.
- Longshore Harbor Workers Compensation Insurance

PROTECTION OF WORK AND PROPERTY
The Proposer shall continuously maintain adequate protection of all their work and materials from damage or theft and shall protect the City's property and all adjacent property from injury or loss arising in connection with activities under their Contract. The Proposer shall make good any such damage, injury, or loss, except such as may be caused by agents or employees of the City.

The Proposer shall take, use, provide, and maintain all necessary precautions, safeguards, and protection to prevent accidents, or injury to persons or property on, about, or adjacent to the site of the work. Should the situation arise that physical security is needed the Proposer will provide security on off days and holidays. The Proposer shall be responsible for all charges incurred with such action.

The Proposer shall post danger signs warning against any hazards created by the work being done under their Contract. They shall designate a responsible member of their organization on the work, whose duty shall be the prevention of accidents, and the name of the person so designated shall be reported to the City Manager or designee and City in writing. In an emergency affecting the safety of life, or of the work or adjoining property, the Proposer, without special instruction or authorization from the City Manager or designee, or City, is hereby permitted to act, at their own discretion, to prevent such threatened loss or injury, and they must take such action if so instructed or authorized by the City Manager or designee. The Proposer shall also protect adjacent property as required by law.

PROPOSAL REVIEW AND CONTRACT AWARD
Failure to submit all documents requested at the time of proposal may deem the Proposer's proposal ineligible for award. The City of St. Pete Beach reserves the right to reject any or all proposals or parts of proposals. The contract shall be awarded by written notice to the responsible and responsive Contractor whose proposal is determined in writing to be the most advantageous to the City, taking into consideration the price and other criteria set forth in this request for proposals. The City may waive any informality.

LOCAL, STATE AND FEDERAL COMPLAINCE REQUIREMENTS
The laws of the State of Florida do apply to any purchase made under this Request for Proposal. Proposers shall comply with all local, state, and federal directives, orders and laws as applicable to their proposal and subsequent contracts include but not limited to Equal Employment Opportunity, Minority Business Enterprise, and OSHA as applicable to this contract.

Compliance with Fla. Stat. 448.095:

- Proposer agrees to comply with all applicable portions of Fla. Stat. 448.095. Proposer must use the

U.S. Department of Homeland Security's E-Verify System, hhtps://e-verify.uscis.gov/emp, to verify the employment eligibility of all employees hired on or after January 1, 2021 during the term of this Agreement.

- Subcontractors (i) Proposer shall also require all subcontractors performing work under this Agreement to use the E-Verify system for any employees they may hire during the term of this Agreement. (ii) Subcontractors shall provide Proposer with an affidavit stating the subcontractor does not employ, contract with, or subcontract with an unauthorized alien, as defined by Fla. Stat. 448.095 (iii) Proposer shall provide a copy of such affidavit to the City upon receipt and shall maintain a copy for the duration of the Agreement.

- Proposer must provide evidence of compliance with Fla. Stat. 448.05 by January 1, 2021. Evidence may consist of, but is not limited to, providing notice of Proposer's E-Verify number.

- Failure to comply with this provision is a material breach of the Agreement, and the City may choose to terminate the Agreement at its sole discretion. Proposer may be liable for all costs associated with the City securing the same services, inclusive, but not limited to, higher costs for the same services and proposal costs (if necessary). Any challenge to termination under this provision must be filed in the Circuit Court no later than 20 calendar days after the date of termination. If this agreement is terminated for a violation of the statute by the Proposer, the Proposer may not be awarded a public agreement for a period of 1 year after date of termination.

RESERVES THE RIGHT

The City reserves the right to accept or reject any and/or all proposals, to waive irregularities and technicalities, and to request re-submission. If only one proposal is received by the proposal date and time listed, the proposal may or may not be rejected by the City depending upon proposal review and the needs of the City.

The City reserves the right to select a firm with or without additional interviews and may decide to select any of the firms submitting proposals. The City reserves the right to award the contract to a responsible proposer submitting a responsible proposal, with a resulting negotiated agreement which is most advantageous and in the best interest of the City.

Proposers, Proposers, their agents, and associates shall not contact or solicit any City Commission member, City employee, or official regarding this RFP during any phase of the proposalding process. Failure to comply with the provision may result in disqualification of the Proposer, at the option of the City. Only that individual listed, or an approved designee, as the contact person for this RFP shall be contacted.

SUBMITTAL WITHDRAWAL

After submittals are opened, corrections or modifications to submittals are not permitted, but a responding firm may be permitted to withdraw an erroneous submittal prior to the award by the City Commission, if the following is established:

- That the responding firm acted in good faith in submitting the submittal;
- That in preparing the submittal there was an error of such magnitude that enforcement of the submittal would work severe hardship upon the respondent;
- That the error was not the result of gross negligence or willful inattention on the part of the respondent;
- That the error was discovered and communicated to the City within twenty-four (24) hours of submittal opening, along with a request for permission to withdraw the submittal; or
- The responding firm submits documentation and an explanation of how the error was made.

CONE OF SILENCE
Respondents to this solicitation or persons acting on their behalf may not contact, between the release of the solicitation and the end of the 72-hour period following the agency posting the notice of intended award, excluding Saturdays, Sundays, and state holidays, any employee or officer of the executive or legislative branch concerning any aspect of this solicitation, except in writing to the procurement officer or as provided in the solicitation documents. Violation of this provision may be grounds for rejecting a response.

TERMINATION
The resulting contract may be canceled by the City when:

- Sufficient funds are not available to continue its full and faithful performance of this contract.
- There is sub-standard or non-performance of contract.
- The City wishes to terminate at any time and for any reason, upon giving thirty (30) days prior written notice to the other party.

The resulting contract may be canceled by either party in the event of substantial failure to perform in accordance with the terms by the other party through no fault of the terminating party.

FISCAL NON-FUNDING

If funds for the requested services described herein are not appropriated via the annual budget adoption process, the City reserves the right to cancel this Agreement immediately upon written notice to the vendor.

PROJECT RECORDS
The awarded firm shall maintain auditable records concerning the procurement to account for all receipts and expenditures, and to document compliance with the Contract. These records shall be kept in accordance with generally accepted accounting methods, and the City of St. Pete Beach reserves the right to determine the record-keeping method in the event of non-conformity. These records shall be maintained for three (3) years after final payment has been made and shall be readily available to City personnel with reasonable notice, and to other persons in accordance with the Florida Public Disclosure Statutes. Additionally, the awarded firm shall abide by and comply with Florida Statutes regarding public records. Specifically, the firm shall be aware of the provisions found in Section 119.0701, Florida Statutes.

Upon completion of the project, all reports, studies, recommendations, forms, and other project specific information will need to be submitted in paper and in an electronic file format (.PDF, .JPEG) on CD or USB storage device.

V. REFERENCES & MINIMUM QUALIFICATIONS

Provide at least three (3) or more professional, business references with which you have contracted to provide similar services in the past five (5) years. Include the name of the person, its organization, telephone number, fax number, and e-mail address. Include any governmental agencies, with the same contact and descriptive information for which you have provided similar service within the past five (5) years.

Provide a brief description of the history and capabilities of the firm. Describe the types of projects or services the firm performs/has performed and the dollar value of each. Provide information regarding your firm's ability to complete this project. Demonstrate that the firm's personnel have experience with similar projects.

Identify all unresolved and ongoing claims and disputes against your firm in excess of $500,000. Include any claims against the principals of your firm or any claims your company may have against a third party. Provide a history of litigation, including the outcomes, for the past five (5) years.

The responding firm shall provide a statement of assurance that the firm is not presently in violations of any statutes or regulatory rules that might have an impact on the firm's operations. All applicable laws and regulations of the State of Florida and ordinances and regulations of the City of St. Pete Beach will apply.

Provide the overall bonding capacity for the company and provide a history of any claims against the Proposer's previous bonds for the past five (5) years.

The City shall be the sole final judge of qualifications of Proposer to perform service and reserves the exclusive right to accept or reject any proposal as it deems to be in the best interests of the City. The City reserves the right to make such investigation, as it deems necessary, to determine the ability of any proposer to perform the work or service requested. Failure to comply with the requirements of this section may be grounds for rejecting a response.

VI. CONTRACTOR'S PROPOSAL SUBMITTAL

The company that is submitting a proposal declares that it has extensive experience in Wastewater System Rehabilitation Services, including manhole rehabilitation, pipe lining and point repairs.

The undersigned, as Proposer, hereby declares that the only person or persons interested in the Proposal as principal or principals are named herein, and that no person other than herein mentioned has any interest in the Proposal or in the Agreement to be entered into; that this Proposal or Agreement is made without connection with any other person, company, or parties making a Proposal; and that it is in all respects fair and in good faith without collusion or fraud.

The Proposer further declares that they have examined the site of the work and informed themselves fully in regard to all conditions pertaining to the place where the work is to be done; that they have examined the Plans and Specifications for the work and Contract Documents relative thereto, and have read all special provisions furnished prior to the opening of proposals; and that they have satisfied themselves relative to the materials to be supplied and work to be performed.

The Proposer proposes and agrees, if the Proposal is accepted, to contract with the City of St. Pete Beach, Florida, in the form of an Agreement specified for **"Wastewater System Rehabilitation Services"** in St. Pete Beach, Florida, in full and complete accordance with the shown, noted, described, and reasonably intended requirements of the Plans, Specifications, and Contract Documents, to the full and entire satisfaction of the City of St. Pete Beach, Florida.

The successful Proposer shall be required to utilize the template Agreement in this Request for Proposals (RFP) and any questions regarding the Agreement must be addressed during the RFP process before submittal. The City reserves the right to respond or not respond to questions in the form of an addendum.

The Proposer proposes to furnish all materials, equipment, labor, and perform the work submitted in their proposal schedule for the City of St. Pete Beach **"Wastewater System Rehabilitation Services."**

COMPANY:_____ DATE: _____

ADDRESS:_____ PHONE:_____

PROPOSER: _____ NAME: _____

(SIGNATURE) (PRINT NAME & TITLE)

STATE OF FLORIDA
COUNTY OF _____

The foregoing instrument was sworn to (or affirmed), subscribed, and acknowledged before me by means of ☐ physical presence or ☐ online notarization, this _____ day of _____, 2026, by_____, who is personally known to me or has produced _____ as identification.

(SEAL)

_____
Notary Public – State of Florida

_____
(Print, Type, Stamp, or Commissioned Name of Notary Public)

SUBMIT PROPOSAL TO: Electronically via Bonfire only

VII. PUBLIC ENTITY CRIMINAL AFFIDAVIT

SWORN STATEMENT – PUBLIC ENTITY CRIMES

PURSUANT TO § 287.133 (3)(a), FLORIDA STATUTES, ON PUBLIC ENTITY CRIMES
THE FORM MUST BE SIGNED AND SWORN TO IN THE PRESENCE OF A NOTARY PUBLIC OR OTHER OFFICIAL AUTHORIZED TO ADMINISTER OATHS.

1. This sworn statement is submitted to: City of St. Pete Beach

   by: _____
   (Print individual's name and title)

   for: _____
   (Print name of entity submitting sworn statement)

   at: _____
   (Business address)

   and (if applicable), its Federal Employer Identification Number (FEIN):

   _____
   (FEIN)
   or, if the entity has no FEIN, include the Social Security Number:

   _____
   (SSN)

   by the individual signing this sworn statement: _____
   (Signature)

2. I understand that a "public entity crime" as defined in § 287.133 (1)(g), Fla. Stat., means a violation of any State or Federal law by a person with respect to and directly related to the transaction of business with any public entity or with an agency or political subdivision of any other state or of the United States including, but not limited to, any proposal or contract for goods or services, any lease for real property, or any contract for the construction or repair of a public building or public work, involving antitrust, fraud, theft, bribery, collusion, racketeering, conspiracy, or material misrepresentation.

3. I understand that "convicted" or "conviction" as defined in § 287.133 (1)(b), Fla. Stat., means a finding of guilt or a conviction of public entity crime with or without an adjudication of guilt in any Federal or State trial court of record relating to charges brought by indictment or information after July 1, 1989, as a result of a jury verdict, non-jury trial, or entry of a plea of guilty or nolo contendere.

4. I understand that an "affiliate" as defined in § 287.133 (1)(a), Fla. Stat., means:
   a. A predecessor or successor of a person convicted of a public entity crime or
   b. An entity under the control of any natural person who is active in the management of the entity and who has been convicted of a public entity crime. The term "affiliate" includes those officers, directors, executives, partners, shareholders, employees, members, and agents who are active in the management of an affiliate. The ownership by one (1) person of shares constituting a controlling interest in another person or a pooling of equipment or income among persons when not for fair market value under the arm's length agreement, shall be a prima facie case that one (1) person controls another person. A person who knowingly enters into a joint venture with a person who has been convicted of a public crime in Florida during the preceding thirty-six (36) months shall be considered an

affiliate.

5. I understand that a "person" as defined in Section 287.133 (1)(e), Fla. Stat., means any natural person or any entity organized under the laws of any state or of the United States with the legal power to enter into a binding contract and which proposals or applies to proposal on contracts let by a public entity, or which otherwise transacts or applies to transact business with a public entity. The term "person" includes those officers, directors, executives, partners, shareholders, employees, members, and agents who are active in management of an entity.

6. Based on information and belief, the **statement which I have marked below is true** in relation to the entity submitting this sworn statement (indicate which statement applies).

☐ Neither the entity submitting this sworn statement, nor any of its officers, directors, executives, partners, shareholders, employees, members, or agents who are active in the management of the entity nor any affiliate of the entity has been charged with and convicted of a public entity crime subsequent to July 1, 1989.

☐The entity submitting this sworn statement or one (1) or more of its officers, directors, executives, partners, shareholders, employees, members, or agents who are active in the management of the entity or an affiliate of the entity has been charged with and convicted of a public entity crime subsequent to July 1, 1989.

☐The entity submitting this sworn statement or one (1) or more of its officers, directors, executives, partners, shareholders, employees, members, or agents who are active in the management of the entity or an affiliate of the entity has been charged with and convicted of a public entity crime subsequent to July 1, 1989. However, there has been a subsequent proceeding before a Hearing Office of the State of Florida, Division of Administrative Hearings and the Final Order entered by the Hearing Officer determined that it was not in the public interest to place the entity submitting this sworn statement on the convicted vendor list (attach a copy of the final order).

I UNDERSTAND THAT THE SUBMISSION OF THIS FORM TO THE CONTRACTING OFFICE FOR THE PUBLIC ENTITY IDENTIFIED IN PARAGRAPH 1 ABOVE IS FOR THE PUBLIC ENTITY ONLY AND THAT THIS FORM IS VALID THROUGH DECEMBER 31 OF THE CALENDAR YEAR IN WHICH IT IS FILED. I ALSO UNDERSTAND THAT I AM REQUIRED TO INFORM THE PUBLIC ENTITY PRIOR TO ENTERING INTO A CONTRACT IN EXCESS OF THE THRESHOLD AMOUNT PROVIDED IN SECTION 287.017, FLORIDA STATUTES, FOR CATEGORY TWO OF ANY CHANGE IN THE INFORMATION CONTAINED IN THIS FORM.

STATE OF FLORIDA
COUNTY OF _____

The foregoing instrument was sworn to (or affirmed), subscribed, and acknowledged before me by means of ☐ physical presence or ☐ online notarization, this _____ day of _____, 2026, by_____, who is personally known to me or has produced _____ as identification.

(SEAL)

_____
Notary Public – State of Florida

_____
(Print, Type, Stamp, or Commissioned
Name of Notary Public)

VIII. NON-COLLUSION AFFADAVIT

STATE OF _____ COUNTY OF _____

I state that **I**_____of_____,
(Name and Title) (Name of Firm)

I am authorized to make this affidavit on behalf of my firm and its owner, directors and officers. I am the person responsible in my firm for the price(s) and amount(s) of this Response, and the preparation of the Response. I state that:

1. The price(s) and amount(s) of this Response have been arrived at independently and without consultation, communication or agreement with any other Provider, potential provider, Proposal, or potential Proposal.
2. Neither the price(s) nor the amount(s) of this Response, and neither the approximate price(s) nor approximate amount(s) of this Response, have been disclosed to any other firm or person who is a Provider, potential Provider, Proposal, or potential Proposal, and they will not be disclosed before Proposal opening.
3. No attempt has been made or will be made to induce any firm or persons to refrain from submitting a Response for this contract, or to submit a price(s) higher that the prices in this Response, or to submit any intentionally high or noncompetitive price(s) or other form of complementary Response.
4. The Response of my firm is made in good faith and not pursuant to any agreement or discussion with, or inducement from, any firm or person to submit a complementary or other noncompetitive Response.
5. _____, its affiliates, subsidiaries, officers, director, and employees (Name of Firm) are not currently under investigation, by any governmental agency and have not in the last three years been convicted or found liable for any act prohibited by State or Federal law in any jurisdiction, involving conspiracy or collusion with respect to Proposal, on any public contract, except as follows:

I state that I and the named firm understand and acknowledge that the above representations are material and important, and will be relied on by the State of Florida for which this Response is submitted. I understand and my firm understands that any misstatement in this affidavit is, and shall be treated as, fraudulent concealment from the State of Florida of the true facts relating to the submission of responses for this contract.

Name of Organization:_____Signed By: _____

Print Name:_____

The foregoing instrument was sworn to (or affirmed), subscribed, and acknowledged before me by means of ☐ physical presence or ☐ online notarization, this _____ day of _____, 2026, by _____, who is personally known to me or has produced _____ as identification.

(SEAL)

_____
Notary Public – State of Florida

_____
(Print, Type, Stamp, or Commissioned
Name of Notary Public)

CONTRACT DOCUMENTS

TECHNICAL SPECIFICATIONS

FOR

St. Pete Beach
The Sunset Capital of Florida
PUBLIC SERVICES

CITY OF ST. PETE BEACH

SOLICITATION NAME:

Wastewater System Rehabilitation Services

MANHOLE REHABILITATION

PIPE LINING

POINT REPAIRS

TABLE OF CONTENTS

SECTION 1 – GENERAL

1.01 LOCATION OF THE WORK SITE AND ACCESS

1.02 SCOPE OF WORK

1.03 PROJECT SUMMARY

1.04 CONTRACT DRAWINGS AND SPECIFICATIONS

1.05 FIELD ENGINEERING

1.06 SAFEGUARDING SURVEY MARKS

1.07 INSPECTION AUTHORITY

1.08 PROJECT SCHEDULE

1.09 MATERIALS AND EQUIPMENT

1.10 MANUFACTURER

1.11 SAMPLES

1.12 EQUIVALENT QUALITY

1.13 MATERIAL AND EQUIPMENT DELIVERY AND STORAGE

1.14 SERVICE OF MANUFACTURER'S REPRESENTATIVE

1.15 CONTAMINANTS CONTAINMENT/DISPOSITION

1.16 PREVENTION, CONTROL, AND ABATEMENT OF EROSION AND WATER POLLUTION

1.17 MAINTENANCE OF STORM DRAINAGE SYSTEM

1.18 SPILL OR DISCHARGE OF WASTEWATER OR RECLAIMED WATER

1.19 SEQUENCE OF OPERATION

1.20 WORK IN STREETS AND HIGHWAYS

1.21 WORK IN PRIVATE PROPERTY

1.22 PERMITS

1.23 FIELD OFFICE AND APPURTENANT STRUCTURES

1.24 CONTRACTOR'S SIGN

1.25 MOBILIZATION

1.26 WATER PURCHASE

1.27 TRAFFIC CONTROL

1.28 TREE PROTECTION

1.29 TREE REMOVAL AND REPLACEMENT

1.30 UTILITIES

1.31 NEIGHBORHOOD NOTIFICATION

1.32 SHOP, FIELD, AND LABORATORY TESTING

1.33 SALVAGED MATERIALS

SECTION 2 – PAY ITEM DESCRIPTIONS

2.01 SCOPE

2.02 ESTIMATED QUANTITIES

2.03 WORK OUTSIDE AUTHORIZED LIMITS

2.04 MEASUREMENT STANDARDS

2.05 AREA MEASUREMENTS

2.06 LUMP SUM ITEMS

2.07 PAY ITEM DESCRIPTIONS

WASTEWATER SYSTEM MANHOLE REHABILITATION
WASTEWATER SYSTEM PIPE LINING
WASTEWATER SYSTEM POINT REPAIRS

SECTION 3 – SUBMITTALS

3.01 GENERAL

3.02 CONTRACTOR RESPONSIBILITIES

3.03 SUBMITTAL NUMBERING

3.04 SUBMITTAL REVIEW

SECTION 4 – AS BUILTS

4.01 MINIMUM AS-BUILT DRAWING STANDARDS FOR ALL AS-BUILT DRAWINGS

4.02 AS-BUILT DRAWINGS PREPARATION

4.03 AS-BUILT DRAWINGS SUBMITTAL

SECTION 5 – CONCRETE, MASONRY, AND REINFORCING STEEL

5.01 GENERAL

5.02 PORTLAND CEMENT CONCRETE

5.03 REINFORCING STEEL

5.04 FIBROUS CONCRETE REINFORCEMENT

5.05 PLACEMENT OF REINFORCEMENT

5.06 PLACEMENT OF CONCRETE

5.07 CURING OF CONCRETE

5.08 FINISHING OF CONCRETE

5.09 CONCRETE BRICK

5.10 CLAY BRICK

5.11 MASONRY BLOCK

5.12 MORTAR

5.13 GROUT

SECTION 6 – EXCAVATION AND BACKFILL

6.01 GENERAL

6.02 TRENCH SAFETY

6.03 WORK IN WETLANDS, MANGROVES, AND PRESERVATION AREAS

6.04 CLEARING AND GRUBBING

6.05 ROADWAY EXCAVATION

6.06 TRENCH EXCAVATION

6.07 STRUCTURE EXCAVATION

6.08 EXCAVATION OF UNSUITABLE MATERIAL

6.09 SHEETING, SHIELDING, AND SLOPING

6.10 DEWATERING

6.11 BORROW MATERIAL

6.12 BEDDING MATERIAL

6.13 STRUCTURAL SLAB BEDDING

6.14 BACKFILL MATERIAL

6.15 BACKFILL COMPACTION

6.16 BACKFILLING OF TRENCH

6.17 BACKFILLING STRUCTURES

6.18 BACKFILLING UNDER ROADWAYS

6.19 DISPOSING OF LEFTOVER MATERIAL

6.20 ADJACENT FACILITIES

6.21 TEMPORARY SUPPORTS

6.22 FLOWABLE FILL

SECTION 7 – SURFACE RESTORATION

7.01 GENERAL

7.02 ROADWAY RESTORATION

7.03 TEMPORARY PAVEMENT

7.04 SHELL BASE

7.05 LIMEROCK BASE

7.06 CRUSHED (RECLAIMED) CONCRETE BASE

7.07 ASPHALTIC CONCRETE PAVEMENT

7.08 BRICK PAVEMENT

7.09 CURB AND GUTTER

7.10 CONCRETE SIDEWALK

7.11 HEXAGON BLOCK SIDEWALK

7.12 DRIVEWAY AND PARKING LOT

7.13 DRIVEWAY - ASPHALT

7.14 DRIVEWAY - CONCRETE

7.15 DRIVEWAY - PEAGRAVEL

7.16 DRIVEWAY - SHELL

7.17 GRASS

7.18 EXPANSION JOINT MATERIAL

SECTION 8 – PAINTING

8.01 GENERAL

8.02 SUBMITTALS

8.03 PAINTING SCHEDULES AND SYSTEMS

8.04 EXECUTION

SECTION 9 – PIPING MATERIALS: DUCTILE IRON PIPE AND FITTINGS

9.01 GENERAL

9.02 PIPE

9.03 FITTINGS

9.04 JOINTS – BURIED PIPE AND FITTINGS

9.05 JOINTS – EXPOSED PIPE AND FITTINGS

9.06 DETECTION

9.07 ZINC/EPOXY/FLUOROPOLYMER PROTECTIVE COATING

SECTION 10 – PIPING MATERIALS: PVC PRESSURE PIPE

10.01 GENERAL

10.02 PIPE

10.03 FITTINGS

10.04 JOINTS

10.05 DETECTION

10.06 MARKINGS AND COLOR CODING

10.07 HARNESSING

10.08 INSPECTION AND TESTING

SECTION 11 – PIPING MATERIALS: HDPE PRESSURE PIPE

11.01 SCOPE OF WORK

11.02 QUALIFICATIONS

11.03 POLYETHYLENE PRESSURE PIPE

11.04 JOINTS

11.05 DETECTION

11.06 IDENTIFICATION

11.07 INSTALLING POLYETHYLENE PRESSURE PIPE AND FITTINGS

11.08 INSPECTION AND TESTING

SECTION 12 – PRESSURE PIPE CONSTRUCTION

12.01 GENERAL

12.02 DATA TO BE SUBMITTED

12.03 MATERIALS

12.04 CONNECTIONS TO EXISTING MAINS

12.05 CONSTRUCTION OPERATIONS

12.06 LAYING AND JOINTING PRESSURE PIPELINES

12.07 PIPELINE CLEANING

12.08 TESTING AND DISINFECTION OF PRESSURE PIPELINES

12.09 SURFACE RESTORATION AND MISCELLANEOUS

SECTION 13 – DIRECTIONAL BORING OF PIPE

13.01 GENERAL

13.02 TESTING

13.03 QUALIFICATIONS

13.04 SUBMITTALS

13.05 MATERIALS

13.06 SITE CONDITIONS

13.07 DAMAGE RESTORATION & REMEDIATION

13.08 QUALIFICATIONS FOR REJECTION OF DIRECTIONAL BORE

13.09 PRODUCT LOCATING AND TRACKING

13.10 PRODUCT BORE HOLE DIAMETER

13.11 EQUIPMENT REQUIREMENTS

13.12 THRUST / PULLBACK REQUIREMENTS

13.13 INSTALLATION PROCESS

13.14 PIPELINE TESTING

SECTION 14 – JACKING AND BORING

14.01 SCOPE OF WORK

14.02 OPERATIONS ON THE CITY OF ST. PETE BEACH OR STATE OF FLORIDA PROPERTY

14.03 SHOP DRAWINGS

14.04 SUBMITTALS

14.05 CASING PIPE

14.06 CARRIER PIPE

14.07 CASING SPACERS

14.08 TUNNEL LINER PLATES

14.09 CASING END SEALS

14.10 CONSTRUCTION

14.11 INSTALLING CARRIER PIPE IN CASING PIPE

14.12 TESTING

SECTION 15 – FLUSHING, TESTING, AND DISINFECTION

15.01 WORK INCLUDED

15.02 REFERENCES

15.03 SUBMITTALS

15.04 QUALITY ASSURANCE

15.05 REGULATORY REQUIREMENTS

15.06 DISINFECTION CHEMICALS

15.07 FLUSHING AND PRESSURE TESTING – PIPING

15.08 DISINFECTION FOR WATER MAIN INSTALLATION

15.09 BACTERIOLOGICAL SAMPLING FOR WATER MAIN INSTALLATION

15.10 QUALITY CONTROL

15.11 CONNECTIONS TO EXISTING MAINS

SECTION 16 – SANITARY SEWER BYPASS PUMPING

16.01 SCOPE OF WORK

16.02 PUBLIC IMPACTS

16.03 SUBMITTALS

16.04 EQUIPMENT

16.05 SITE CONDITIONS

16.06 ON-SITE MONITORING

16.07 OPERATIONS

16.08 DAMAGE RESTORATION & REMEDIATION

SECTION 17 – VALVES AND APPURTENANCES

17.01 GENERAL

17.02 TOOLS

17.03 GATE VALVES

17.04 PRESSURE SUSTAINING AND CHECK VALVE

17.05 BALL VALVES FOR PVC PIPE

17.06 BUTTERFLY VALVES

17.07 PLUG VALVES

17.08 VALVE ACTUATORS

17.09 AIR RELEASE VALVES

17.10 VALVE BOXES

17.11 CORPORATION COCKS

17.12 FLANGE ADAPTER COUPLINGS

17.13 FLEXIBLE COUPLINGS

17.14 HOSE BIBS

17.15 SLOW CLOSING AIR AND VACUUM VALVES

17.16 SURGE ANTICIPATOR VALVES

17.17 CHECK VALVES

17.18 HYDRANTS

17.19 RESTRAINING CLAMPS

17.20 TAPPING SLEEVES AND GATE VALVES

17.21 SINGLE ACTING ALTITUDE VALVES

17.22 INSTALLATION

17.23 HYDRANT INSTALLATION

17.24 SHOP PAINTING

17.25 FIELD PAINTING

17.26 INSPECTION AND TESTING

SECTION 18 – SANITARY SEWER CONSTRUCTION

18.01 GENERAL

18.02 DATA TO BE SUBMITTED

18.03 MATERIALS

18.04 CONNECTIONS TO EXISTING SANITARY SEWERS

18.05 CONSTRUCTION OPERATIONS

18.06 MANHOLE CONSTRUCTION

18.07 LAYING AND JOINTING PIPELINES

18.08 TESTING OF SEWER PIPELINES

18.09 SANITARY SEWER PIPE REPAIRS

SECTION 19 – CEMENTITIOUS REHABILITATION – NOT APPLICABLE

SECTION 20 – CCTV INSPECTION AND PIPE CLEANING

20.01 SCOPE OF SERVICES AND WORK PHASING FOR SYSTEM CCTV INSPECTION AND PIPE CLEANING

20.02 COMPLIANCE AND ACCEPTANCE

20.03 CLEANING EQUIPMENT

20.04 REFERENCES DOCUMENTS

20.05 GENERAL EXECUTION

20.06 SUBMITTALS

20.07 OWNER RIGHTS

20.08 EMERGENCY RESPONSE

20.09 SEQUENCE OF INSPECTION AND CLEANING

SECTION 21 – CURED-IN-PLACE PIPE LINER (CIPP)

21.01 GENERAL

21.02 REFERENCE DOCUMENTS

21.03 QUALIFICATION REQUIREMENTS

21.04 SUBMITTALS

21.05 MATERIALS

21.06 STRUCTURAL REQUIREMENTS

21.07 INSTALLATION

21.08 CIPP MAIN LINER TERMINATION AND CONNECTION IN MANHOLES

21.09 SERVICE RECONNECTION

21.10 INSTALLATION RESPONSIBILITIES FOR INCIDENTAL ITEMS

21.11 QUALITY ASSURANCE PROCEDURES

SECTION 22 – PRECAST POLYMER CONCRETE STRUCTURES – NOT APPLICABLE

SECTION 23 – FIBERGLASS WET WELL OR MANHOLE LINER

23.01 GENERAL

23.02 MATERIALS

23.03 WET WELL FABRICATION

23.04 FRP MANHOLE LINER DESIGN

23.05 PHYSICAL REQUIREMENTS

23.06 TEST METHODS

23.07 INSTALLATION

23.08 SHIPPING AND HANDLING

SECTION 24 – SUBMERSIBLE SEWAGE PUMPS – NOT APPLICABLE

SECTION 25 – PUMP STATION CONTROLS – NOT APPLICABLE TO

SECTION 26 – ELECTRICAL – NOT APPLICABLE

SECTION 27 – VARIABLE FREQUENCY DRIVES – NOT APPLICABLE

SECTION 28 – ODOR CONTROL SYSTEMS – NOT APPLICABLE

SECTION 29 – PRECAST CONCRETE BUILDING – NOT APPLICABLE

SECTION 30 – DIESEL DRIVEN GENERATOR WITH WEATHERPROOF ENCLOSURE – NOT APPLICABLE

SECTION 31 – MISCELLANEOUS EQUIPMENT – NOT APPLICABLE

SECTION 32 – STATE REVOLVING FUND (SRF) REQUIREMENTS – NOT APPLICABLE

SECTION 33 – FRAC-OUT PLAN FOR SUBAQUEOUS CROSSINGS

33.01 GENERAL

33.02 BEST MANAGEMENT PRACTICES (BMPs)

33.03 FRAC-OUT PLAN

33.04 RELEASE PROCEDURE

33.05 DRILLING MUD CONTAINMENT PLAN

SECTION 34 – MANHOLE INSPECTION

34.01 SCOPE OF SERVICES AND WORK PHASING

34.02 REQUIREMENTS

34.03 QUALITY ASSURANCE

34.04 SHOP DRAWINGS AND SUBMITTALS

34.05 NOTIFICATION

34.06 EXECUTION

34.07 MANDATORY INSPECTION HEADER INFORMATION

34.08 MANHOLE COMPONENT OBSERVATIONS

34.09 MANHOLE INTERIOR INSPECTION

34.10 CONNECTING PIPE DETAILS

34.11 MANHOLE SKETCH, MAP, UPDATE, AND NOTES

34.12 NOTIFICATION OF EMERGENCY CONDITIONS

34.13 COMPLETION

34.14 PHOTOGRAPH REQUIREMENTS

34.15 MANHOLE NUMBERING, FORMS, AND DEFECT CODES

34.16 SITE RESTORATION

34.17 DELIVERABLES

SECTION 35 – CHEMICAL SEALING OF HOST PIPE AND SERVICE CONNECTIONS

35.01 GENERAL

35.02 PRODUCTS

35.03 SUBMITTALS

35.04 EQUIPMENT

35.05 EXECUTION

SECTION 36 – REMOVAL OF PROTRUDING SERVICE CONNECTIONS

36.01 GENERAL

36.02 PRODUCTS

36.03 EXECUTION

SECTION 37 – WASTEWATER STRUCTURE REHABILITATION

37.01 GENERAL

37.02 GOVERNING STANDARDS

37.03 DEFINITIONS

37.04 QUALIFICATIONS

37.05 SUBMITTALS

37.06 QUALITY ASSURANCE/ QUALITY CONTROL

37.07 CONTAINMENT AND SITE CONDITIONS

37.08 WARRANTY

37.09 MATERIALS

37.10 REPAIR & PREPARATION

37.11 COATING MATERIAL APPLICATION

37.12 COATING SYSTEM SPECIFICATION SHEETS

END OF SECTION

THIS PAGE INTENTIONALLY LEFT BLANK

SECTION 1 - GENERAL

1.01 LOCATION OF THE WORK SITE AND ACCESS

Access to the work sites shall be over streets and walkways. Any damage to existing pavement surface and base or other surface improvements outside the Contract Pay Limits, attributable to the Contractor's activities, shall be restored to like-new condition by the Contractor at the Contractor's expense.

The proposed work will be located within the City of St. Pete Beach in Pinellas County, FL, throughout the entire wastewater collection and transmission system. Each asset to be rehabilitated and the type of rehabilitation required will be identified in each individual Work Order with the location shown on corresponding geographical exhibits.

1.02 SCOPE OF WORK

The Contractor shall furnish all labor, superintendence, materials, power, light, heat, fuel, water, tools, appliances, equipment, supplies, shop drawings, working drawings and other means of construction necessary or proper for performing and completing the work. The Contractor is responsible for obtaining all required permits necessary for the work, including all applications and review fees, other than those permits which may have already been obtained. The Contractor shall perform and complete the work in a speedy and efficient manner consistent with safety of life and property and to the city’s satisfaction, and in strict accordance with the Contract Documents. The Contractor shall repair or restore all structures and property damaged or disturbed during performance of the work.

The cost of incidental work described in this General Section, for which there are no specific Contract Items, shall be considered as part of the general cost of doing the work and shall be included in the prices for the various Contract Items. No additional payment will be made.

The Contractor shall be solely responsible for the means and methods of construction and the adequacy of his workmanship, materials, and equipment.

1.03 PROJECT SUMMARY

Wastewater System Manhole Rehabilitation (Manhole Project)

The Contractor shall furnish all labor, material, equipment, and services necessary for manhole rehabilitation. The work shall be completed at various locations through the City’s wastewater service area and shall include, but is not limited to, maintenance of traffic, temporary by-pass pumping and/or diversion of wastewater, cleaning, removal and disposal of all sand, rubble, deposits, and other accumulated debris, re-building manhole bench and channels, ring (frame) and cover adjustment and replacement, pavement restoration, inflow/infiltration elimination, surface preparation, cementitious and polymer coatings installation, internal chimney sealing, manhole cover insert installation, testing, project site cleanup and restoration, and all other incidentals as required and directed by the Engineer to complete the work.

Wastewater System Pipe Lining (Lining Project)

The Contractor shall furnish all labor, material, equipment, and services necessary for wastewater pipe rehabilitation using Cured-In-Place-Pipe (CIPP) lining. The work shall be completed at various locations through the City's wastewater service area and shall include, but is not limited to, maintenance of traffic, temporary by-pass pumping and/or diversion of wastewater, cleaning, removal and disposal of all sand, rubble, deposits, and other accumulated debris, CIPP liner installation, reconnection of service laterals, testing of CIPP liners, project site cleanup and restoration, and all other incidentals as required and directed by the Engineer to complete the work.

Wastewater System Point Repairs (Point Repair Project)

The Contractor shall furnish all labor, material, equipment, and services necessary for wastewater point repairs. The work shall be completed at various locations throughout the City's wastewater service area and shall include, but is not limited to, maintenance of traffic, temporary by-pass pumping and/or diversion of wastewater, dewatering, directional drilling, jack and boring, remove unsuitable materials below trench grade, sanitary sewer gravity and force main installation, force main and gravity main connections, remove out of service gravity and force mains, install manhole connections, grout out of service pipe, install valves and associated appurtenances, project site cleanup and restoration, and all other incidentals as required and directed by the Engineer to complete the work.

1.04 CONTRACT DRAWINGS AND SPECIFICATIONS

Where the Contract Drawings and Specifications are not in agreement, the Contract Drawings shall govern. The Contractor shall furnish all labor, equipment, and materials to construct the Project and all miscellaneous and appurtenant work complete in place as specifically described and included under said each Contract Pay Item as shown, specified, or directed by the Engineer in accordance with the obvious or expressed intent of the Contract.

The Technical Specifications for the Project that reference FDOT-SSRBC (Florida Department of Transportation - Standard Specifications for Road and Bridge Construction) pertain to the most recent edition at the date of issuance of these Specifications.

1.04.01 COPIES FURNISHED TO CONTRACTOR

The Contractor shall furnish each of the subcontractors, manufacturers, and material men such copies of the Contract Documents as may be required for their work. Additional copies of the Contract Drawings and Specifications, when requested, may be furnished to the Contractor at cost of reproduction.

1.04.02 SUPPLEMNTARY DRAWINGS

When, in the opinion of the City, it becomes necessary to explain more fully the work to be done or to illustrate the work further or to show any changes which may be required, drawings known as Supplementary Drawings, with specifications pertaining thereto, will be prepared by the Engineer and the City and provided to the Contractor.

1.04.03 CONTRACTOR TO CHECK CONTRACT DRAWINGS AND DATA

The Contractor shall verify all dimensions, quantities and details shown on the Contract Drawings, Supplementary Drawings, Schedules, Specifications or other data received from the City or the Engineer and shall notify the City and Engineer of all errors, omissions, conflicts, and discrepancies found therein. Failure to discover or correct errors, conflicts or discrepancies shall not relieve the Contractor of full responsibility for unsatisfactory work, faulty construction or improper operation resulting therefrom nor from rectifying such conditions at the Contractor's own expense. The Contractor shall assume all responsibility for the making of estimates of the size, kind, and quality of materials and equipment included in work to be done under the Contract with approval by the City.

1.05 FIELD ENGINEERING

The Contractor shall establish and provide all vertical and horizontal control points for this Project including benchmarks. The Contractor shall provide the field layout surveying necessary to properly construct the work as indicated on the Contract Drawings.

All field layout surveying shall be performed under the supervision of a Professional Land Surveyor (Chapter 472, Florida Statutes). The Contractor shall submit the name and registration number of Surveyor as directed by the Engineer. The Engineer reserves the right to check all survey staking and to require adjustments or re-staking by the Contractor in the event that conflicts, or errors are detected.

Water pressure pipelines that are 8-inch or less diameter shall be installed with the required cover using horizontal control stakes provided by the Contractor. Sanitary sewer and sanitary pressure pipelines greater than 8-inch diameter shall be installed using an approved method for line and grade control. Methods for line and grade control shall be submitted to the Engineer for review and acceptance, as specified for shop drawings. Sketches shall be provided by the Contractor showing vertical adjustment necessary for pressure pipelines to adequately clear storm drains and other utilities.

1.06 SAFEGUARDING SURVEY MARKS

The Contractor shall safeguard all existing property monuments, benchmarks, and other survey marks adjacent to and within the Project limits and shall bear the cost of re-establishing them if disturbed or destroyed.

1.07 INSPECTION AUTHORITY

The City or Engineer has ultimate responsibility for contract administration and inspection for this Project. The City or Engineer may assign field inspection responsibilities to a Design Professional and/or City Inspector. Each step of construction is subject to review and acceptance by the City or Engineer prior to proceeding with a subsequent step.

During the progress of the Work and up to the date of final acceptance, the Contractor shall at all times afford representatives of the City, the County, the State, the Department of Environmental

Protection, the Department of Transportation, the Department of Labor, or any other agency with jurisdiction, every reasonable, safe, and proper facility for observation of the work done or being done at the site, and also the manufacture or preparation of materials and equipment at the place of such manufacture or preparation.

The Project line of authority will be presented at the Preconstruction Conference.

1.08 PROJECT SCHEDULE

The Contractor shall submit an electronic version in PDF form within 30 days following the Preconstruction Conference of each Work Order.

Scheduling and progress reporting shall be accomplished using a bar chart to provide a clear and concise comparison of progress.

1.09 MATERIALS AND EQUIPMENT

All materials, appliances, and types of construction shall be in accordance with the Technical Specifications and shall, in no event, be less than that necessary to conform to the requirements of any applicable laws, ordinances, and codes.

All materials and equipment to be incorporated into the Work shall be new, unused, and correctly designed. They shall be of standard first grade quality, produced by expert workmen, and be intended for the use for which they are offered. Materials or equipment which, in the opinion of the Engineer, are inferior or of a lower grade than indicated, specified, or required, will not be accepted.

Projects funded by the State Revolving Fund must comply with the requirements of the American Iron and Steel Requirement unless otherwise specified in the Contract Documents and approved by the Engineer.

1.10 MANUFACTURER

The names of proposed manufacturers, manufacturers' representatives, suppliers, and dealers who are to furnish materials, equipment, or other fittings, shall be submitted by the Contractor to the Engineer for review and acceptance. Such acceptance must be obtained before Shop Drawings will be accepted for review. All transactions with the manufacturer and subcontractors shall be through the Contractor.
Any two or more pieces of material or equipment of the same kind, type, or classification and being used for identical types of service, shall be made by the same manufacturer.

Projects funded by the State Revolving Fund must comply with the requirements of the American Iron and Steel Requirement unless otherwise specified in the Contract Documents and approved by the Engineer.

1.11 SAMPLES

The Contractor shall, when required, submit to the Engineer for review and acceptance, typical samples of material and appliances. The samples shall be properly identified by tags and shall be

submitted sufficiently in advance of the time when they are to be incorporated into the Work so that rejections thereof will not cause delay. A letter of transmittal from the Contractor requesting approval shall accompany all such samples.

1.12 EQUIVALENT QUALITY

In the Contract Documents, whenever an article, material, apparatus, equipment, or process is called for by trade name or by name of a patentee, manufacturer, or dealer, or by reference to catalog of a manufacturer or dealer, it shall be understood as intending to mean and specify the article, material, apparatus, equipment, or process designated, or any equal thereto in quality, finish, design, efficiency, and durability, and equally serviceable for the purposes for which it is intended.

Whenever material or equipment is submitted for review as being equal to that specified, the submittal shall include sufficient information and data to demonstrate that the material or equipment conforms to the Contract requirements. The decision as to whether such material or equipment is equal to that specified shall be made by the Engineer.

Upon rejection of any material or equipment submitted as the equivalent of that specifically named in the Contract, the Contractor shall immediately proceed to furnish the designated material or equipment.

Neither the acceptance by the Engineer of alternate material or equipment as being equivalent to that specified, nor the furnishing of the material or equipment specified, shall in any way relieve the Contractor of responsibility for failure of the material or equipment, due to faulty design, material, or workmanship, to perform the functions required of them by the Contract Documents.

1.13 MATERIAL AND EQUIPMENT DELIVERY AND STORAGE

The Contractor shall deliver materials in ample quantities to ensure the most speedy and uninterrupted progress of the work to complete the work within the allotted time. The Contractor shall also coordinate deliveries to avoid delay in, or impediment of, the progress of the work of any related contractor. The Contractor shall provide space for storage of materials and equipment.

Pipe strung along roads and rights-of-way shall be placed in a manner that will not endanger or restrict pedestrian or vehicular traffic. Pipe strings shall not be allowed outside right-of-way limits.

1.14 SERVICE OF MANUFACTURER'S REPRESENTATIVE

The Contract amount shall include but is not limited to the cost of furnishing a competent and experienced representative of the equipment manufacturer who shall assist the Contractor, when required, to install, adjust, test, and place in operation the equipment in conformity with the Contract Documents. After the equipment is placed in operation, the representative shall make all adjustments and tests required by the Engineer to prove that the installed equipment is in proper and satisfactory operating condition. The representative shall instruct personnel as may be designated by the Engineer in the proper operation and maintenance of such equipment.

1.15 CONTAMINANTS CONTAINMENT/DISPOSITION

Prior to the installation of well points for dewatering, the Contractor shall visually inspect the work area for indications of existing ground water monitoring, wells, or metal caps at grade. The Contractor shall review the work area for monitoring wells or abandoned fuel tanks and shall notify the Engineer in writing if any of the above items exist.

During dewatering activities, contractor to test water for contaminants before discharge. If the water is odorous, contaminated, or discolored (excluding tannic acid or iron), the Contractor shall stop the dewatering activities and shall notify the Engineer in writing of such, and request direction.

When work activities encounter or expose any abnormal condition that may indicate the existence of a hazardous or toxic waste, work activities shall stop in the vicinity of the abnormal condition and the Contractor shall notify the Engineer immediately. The presence of tanks or barrels; discolored earth, metal, wood, or groundwater; visible fumes; abnormal odors; excessively hot earth; smoke; or other conditions that appear abnormal, may be signs of hazardous or toxic wastes and shall be treated with extraordinary caution.

Every effort shall be made by the Contractor to minimize the spread of any hazardous or toxic waste into uncontaminated areas.

The Contractor's operations shall not resume until directed in writing by the Engineer.

Disposition of the hazardous or toxic waste will be made in accordance with the requirements and regulations of any City, County, State, or Federal agency having jurisdiction.

1.16 PREVENTION, CONTROL, AND ABATEMENT OF EROSION AND WATER POLLUTION

The Contractor shall be responsible for prevention, control, and abatement of erosion, siltation, and water pollution resulting from construction of the Project until final acceptance of the Project.

The Contractor shall implement all appropriate turbidity management practices at the point of discharge into a storm sewer, gutter, or other conveyance to ensure that state water quality standards are not violated at the point where the storm drain, gutter, or other conveyance discharges into a surface water.

All necessary provisions shall be taken to ensure compliance with the water quality standards of the State of Florida. Attention is called to Chapter 62-302, Florida Administrative Code, and in particular, the requirements that turbidity shall not exceed 29 NTUs above background level. Adequate silt containment procedures and equipment shall be used to control turbidity, at no additional cost to the City.

1.17 MAINTENANCE OF STORM DRAINAGE SYSTEM

The Contractor shall be responsible at all times to maintain the operation of existing stormwater facilities, or, when existing stormwater facilities are removed, to provide equivalent capacity alternate forms of stormwater removal adequate to prevent upstream flooding in excess of existing conditions. This responsibility shall include but is not limited to the installation of temporary

connections, bypass pumping, or other temporary means necessary until the new drainage system is fully operational.

1.18 SPILL OR DISCHARGE OF WASTEWATER OR RECLAIMED WATER

The discharge of wastewater or effluent (reclaimed water) into waters of the State and/or into canals, ditches, and ponds that are connected to waters of the State is prohibited. Any spill or discharge of wastewater or reclaimed water shall be immediately reported to the Engineer, the City's Project Manager, and the City's Emergency Dispatch Center. Contact information will be provided for all necessary City personnel and the Engineer at the Preconstruction Conference. In the event of a spill or discharge, the Contractor shall immediately control, contain, and stop the spill or discharge and shall repair any damage to the City's facilities.

The Contractor shall be responsible for any penalties and costs charged to the City by the FDEP and for all costs incurred by the City as a result of the Contractor's actions or as a result of the Contractor's negligence. The fines, and anticipated costs, which may be incurred by the City as a result of the Contractor's actions or negligence, shall be paid to the City within 30 days, or the costs incurred will be deducted from the total Contract amount.

1.19 SEQUENCE OF OPERATION

1.19.01 PIPELINE WORK

It is the intent of the City that all pipeline work associated with the Project be installed to completion in a timely and orderly manner to minimize inconvenience to the Public. Pipe and pipe materials shall not be stored or strung in residential areas more than 3 weeks in advance of pipe installation unless otherwise approved by the Engineer.

The Contractor shall include in the Project Schedule a Sequence of Operations including, but not limited to, the following components:

A. Pipe and pipe material storage
B. Bypass Pumping
C. Backfilling
D. Testing and repairs
E. Disinfection
F. Surface Restoration and Cleanup

1.19.02 PUMP/LIFT STATION WORK

It is essential that any Project work conducted at Pump/Lift Station sites be sequenced to minimize obstruction of normal daily operations of the Pump/Lift Station.

The Contractor shall include in the Project Schedule a Sequence of Operations including, but not limited to, the following components:

A. Equipment and material storage
B. Bypass Pumping

C. Testing and repairs
D. Surface Restoration and Cleanup

1.19.03 MISCELLANEOUS

Utility Companies may be present on the work site adjusting their facilities and installing new facilities. The Contractor's work shall be scheduled in such a manner as to minimize conflicts with various utility companies.

The Contractor shall clean up the site for each phase of work in accordance with the Contract Documents and confine work and personnel to designated areas in accordance with the Specifications. Before proceeding to a subsequent phase of work, unless otherwise approved by the Engineer.

1.19.04 NO TIME EXTENSION

If the Engineer orders construction, or a phase of construction, to be stopped due to the Contractor's neglect to adhere to the Sequence of Operations as outlined herein, the Stop Work Order shall not constitute a basis for extension of time.

1.20 WORK IN STREETS AND HIGHWAYS

All work within streets and highways shall be subject to the regulations and requirements of the City of St. Pete Beach, FDOT, and all other agencies with jurisdiction of the streets and highways in the work limits.

Methods and materials of construction used in restoration within such streets and highways shall conform to the requirements, inspection, and acceptance of the duly authorized representatives of the appropriate agency having jurisdiction. Restoration Work shall include but not be limited to: removal and replacement of pavement, sidewalk, curb, and gutter; replacement of storm sewer facilities; excavation and backfilling; and storage of materials and equipment.

1.21 WORK IN PRIVATE PROPERTY

The Contractor shall not trespass upon or in any way disturb private property without first obtaining written permission from the City to do so. In the event that, in the opinion of the Contractor, obtaining a temporary construction easement outside the limits of the right-of-way, of City-owned property, or of the easement(s) obtained by the City is necessary or desirable, it shall be the sole responsibility of the Contractor to obtain such easement from the owner of the property. If such easement is obtained by the Contractor, it shall contain provision to hold the City harmless from any operations of the Contractor within the easement limits. The Contractor shall not conduct construction operations on private property outside the limits of the right-of-way, of City-owned property, or of the easement(s) obtained by the City unless a copy of the Temporary Construction Easement Agreement is filed with the Engineer. It shall be the Contractor's responsibility to work equipment around poles, trees, or other obstructions and to do so at his own expense. The Contractor shall ensure all employees have a badge or visible identification during any time that they on the project site or within private property. This identification must be worn so that it is readily recognized and readable to the public.

Upon completion of work in easements, the Contractor shall, at no additional expense, restore the property, including all fences or other structures disturbed by his operations, to the full satisfaction of the City and shall obtain from the City a written release stating that restoration has been satisfactorily made. A copy of the completed written release shall be furnished to the City prior to payment. All items within the street right-of-way or sewer easement shall be removed, or removed and replaced, or restored as directed by the City.

1.22 PERMITS

Construction projects performed for the City will require licenses and permits in the same manner as private construction projects within the City.

The Contractor shall secure, at his expense, all licenses and permits, and shall comply with all applicable laws, regulations, and codes as required by the State of Florida and/or the City of St. Pete Beach whether performed by the Contractor or by others. The Contractor must be registered to complete such work within Pinellas County.

1.23 FIELD OFFICE AND APPURTENANT STRUCTURES

No field office or appurtenant structures by the Contractor, any subcontractor, or any material supplier, will be allowed on the Project site.

Space on City property or rights-of-way proposed to be used for storage and a field office for the Contractor shall be approved by the Engineer prior to installation providing such uses will not interfere in any manner with the construction of the work or the operation of existing facilities.

1.24 CONTRACTOR'S SIGN

No sign by the Contractor, any subcontractor, or any material supplier, will be allowed on the Project site.

1.25 MOBILIZATION

Mobilization shall include but is not limited to all preparatory work and operations necessary to begin the Project, including moving of personnel, equipment, traffic control, and all else necessary to commence work. The cost of bonds, insurance, shop drawings, and preconstruction expenses shall also be included.

If a separate Pay Item is included for mobilization, payment will be as specified for that Pay Item. If no Pay Item is included, costs for mobilization shall be included with the costs for the major Work items included in the Proposal.

1.26 WATER PURCHASE

Water used in connection with this Project must be coordinated with Pinellas County. Reclaimed water used in connection with this Project must be coordinated with the City.

1.27 TRAFFIC CONTROL

The Contractor shall provide required traffic controls under City observation. The Contractor shall notify the City's Project Manager a minimum of 2 working days prior to any construction affecting traffic flow. A Maintenance of Traffic plan drawing shall be submitted for review by the Engineer prior to each lane closure or opening during construction. All traffic control devices utilized during construction shall be provided by the Contractor and meet the requirements set forth in the latest revision of U.S. Department of Transportation Federal Highway Administration's "Manual on Uniform Traffic Control Devices for Streets and Highways" and the Florida State Department of Transportation's "Standard Plans for Road and Bridge Construction." Failure or refusal, on the part of the Contractor, to install, maintain and/or position traffic control devices promptly, fully, and in an acceptable manner, shall be sufficient cause for the City, after 24-hour notice, to perform the traffic control with its own organization, or to contract with any other individual, firm, or corporation to perform the required traffic control. All costs and expenses incurred thereby shall be charged against the defaulting Contractor, and the amount thereof deducted from any money due, or which may become due him, or shall be charged against the Contract Bond. Any Work performed as described by this paragraph, shall not relieve the Contractor in any way of his responsibility for the Work performed by him.

Traffic shall be performed so that vehicular traffic shall be maintained on with at least one 10-foot wide lane in each direction at all times. An acceptable detour route shall be developed by the Contractor to redirect traffic when and where necessary, with the approval of the Transportation Special Events Division. Temporary lanes shall be constructed with a minimum 1-inch thick asphaltic concrete surface over a 6-inch thick limerock base compacted to 98% of the maximum density in accordance with AASHTO T-180.

Failure of the Contractor to comply with any of the above traffic control requirements may result in issuance of a stop work order until the violation is corrected.

All maintenance of traffic in the FDOT right-of-way shall be in accordance with FDOT requirements.

1.28 TREE PROTECTION

Particular care shall be taken by the Contractor to protect trees during construction by erecting approved barricades to prevent unnecessary damage to trunk and roots during construction. Such barriers shall protect the area within the dripline.

The Contractor shall prune all branches that interfere with construction in accordance with American Forestry Association Standards. Roots over 2-inch diameter shall be preserved wherever possible. If root pruning is required, roots shall be cut cleanly.

Temporary soil deposits, concrete block, concrete wash, or solvents shall not be placed within the dripline. The grade within the dripline shall be preserved. If adjacent grade is altered, protective measures such as those described in the Florida State Division of Forestry "Tree Protection Manual for Builders and Developers" shall be constructed to protect the tree(s) from deleterious effects of the grade change.

1.29 TREE REMOVAL AND REPLACEMENT

The Contractor shall obtain any necessary tree removal permit, shall furnish and replace trees as required, and shall perform this Work in a manner conforming to all applicable provisions of said regulations or permit.

The cost of tree removal and obtaining the tree removal permits shall be included in the cost of the appropriate associated Contract Pay Item under which the Work is to be performed. The Contractor shall remove trees as required and approved by the Engineer whether or not said trees are shown on the Contract Drawings. Trees that must be removed, except for Australian pine, Brazilian pepper, punk, and other exempt species, shall be replaced as directed. Replacement trees shall be of native species at least 8-feet tall and at least 3-inch caliper diameter.

1.30 UTILITIES

Prior to construction, the Contractor shall familiarize himself with the location of all existing utilities and facilities within the Project Site. The Contractor must take the necessary precautions for the protection of any utility encountered on the Project or the restoration of any utility damaged during the work.

If excavation is required, The Contractor shall notify, at least 48 hours before breaking ground, all public or private service corporations having wire, poles, pipes, conduit, manholes, or other structures that may be affected by this operation, including all structures which are affected and not shown on these plans. Utility companies shall be contacted by calling the utility notification center "Sunshine 811" at 1-800-432-4770. Owners which are not members of the state's One Call service must be called directly. The City will furnish to the Contractor the available records of City utilities. The Contractor shall locate and mark all City utilities for his reference and for use by utility companies. The Contractor shall act as the City's agent for locating and marking City underground utilities within the Project limits, in accordance with the Florida Underground Facilities Damage Prevention and Safety Act (FS 556).

In all cases where existing utility lines may be interfered with by the work, the Contractor shall give a minimum of 48 hours' notice (excluding Saturdays, Sundays, and legal holidays) to the owners of such utilities to permit them to relocate the lines prior to construction. Existing utilities have been shown on the Contract Drawings insofar as information is reasonably available. However, it will be the Contractor's responsibility to preserve all existing utilities whether shown on the Contract Drawings or not. All maintenance, repair, and replacement of existing utilities shall be in accordance with the rules and regulations of the various utility companies having jurisdiction. All existing storm sewers, driveway drains, surface drainpipes and other property, removed or damaged during construction shall be repaired and reconnected by the Contractor as directed by the City at no additional cost to the City.

1.31 NEIGHBORHOOD NOTIFICATION

Not less than 7 days prior to the commencement of Work in the right-of-way, the Contractor shall notify all residents and businesses along the construction route with a printed door hanger notice indicating the scheduled date of construction, the type of construction, and the Contractor's and Superintendent's contact information. The door hanger text and a list of residents and businesses to

which the notification has been delivered shall be compiled and submitted to the Engineer prior to the Contractor commencing Work.

1.32 SHOP, FIELD, AND LABORATORY TESTING

The Engineer may require testing by certified personnel of certain materials to be incorporated in the Work, such as: soils density, pavement, concrete pipe and appurtenances, and welds.

In the event any such testing is required by the Engineer, a detailed description will be found in these Technical Specifications concerned with the specific item of Work.

Where reference is made for design mixes, tests of materials, or work performed, or where in the opinion of the Engineer, tests are required to ascertain compliance with the Specifications, the Contractor shall have such tests made by an approved testing laboratory. No additional payment will be made for these tests.

1.33 SALVAGED MATERIALS

The Contractor shall not proceed with demolition of existing materials or equipment without review and acceptance from the Engineer for the method of disposal.

All materials which are not returned to the City yard shall be disposed in an approved disposal site. The Engineer may request confirmation of the site's approval for disposal of the specific materials.

Salvaged materials shall be loaded on Contractor trucks and returned to the Public Services yard at 7581 Boca Ciega Drive, St. Pete Beach, Florida. The City will designate the specific location at the yard for placement of salvaged materials by the Contractor.

The following materials shall be removed and returned by the Contractor: pumps and pump rails, and all other materials as directed by the Engineer.

END OF SECTION

SECTION 2 - PAY ITEM DESCRIPTIONS

2.01 SCOPE

The scope of this section of the Contract Documents is to further define the items included in each Pay Item in the Bid Form section of the Contract Documents. Payment will be made based on the specified items included in the description in this section for each Pay Item.

All contract prices included in the Bid Form section will be full compensation for all shop drawings, working drawings, labor, materials, tools, equipment and incidentals necessary to complete the construction as shown on the Contract Drawings and/or as specified in the Contract Documents to be performed under this Contract. Actual quantities of each item bid on a unit price basis will be determined upon completion of the construction in the manner set up for each item in this section of the Specifications. Payment for all items listed in the Bid Form will constitute full compensation for all work shown and/or specified to be performed under this Contract.

2.02 ESTIMATED QUANTITIES

The quantities shown are approximate and are given only as a basis of calculation upon which the award of the Contract is to be made. The City does not assume any responsibility for the final quantities, nor shall the Contractor claim misunderstanding because of such estimate of quantities. Final payment will be made only for satisfactorily completed quantity of each item.

2.03 WORK OUTSIDE AUTHORIZED LIMITS

No payment will be made for work constructed outside the authorized limits of work.

2.04 MEASUREMENT STANDARDS

Unless otherwise specified for the particular items involved, all measurements of distance shall be taken horizontally or vertically.

2.05 AREA MEASUREMENTS

In the measurement of items to be paid for on the basis of area of finished work, the lengths and/or widths to be used in the calculations shall be the final dimensions measured along the surface of the completed work within the neat lines shown or designated.

2.06 LUMP SUM ITEMS

Where payment for items is shown to be paid for on a lump sum basis, no separate payment will be made for any item of work required to complete the lump sum items. Lump sum contracts shall be complete, tested and fully operable prior to request for final payment. Contractor may be required to provide a break-down of the lump sum totals.

2.07 PAY ITEM DESCRIPTIONS

Separate payment will be made for the items of work described herein and listed on the Bid Form. Any related work not specifically listed but required for satisfactory completion of the work shall be considered to be included in the scope of the appropriate listed work items.

No separate payment will be made for the incidental items not included in the Pay Item descriptions. The cost to complete such work shall be included in the applicable Pay Item unit cost. Final payments shall not be requested by the Contractor or made by the City until as-built (record) drawings have been submitted and approved by the City. Incidental items include, but are not limited to:

1. Shop Drawings, Working Drawings.
2. Clearing, grubbing and grading except as hereinafter specified.
3. Trench excavation, including necessary pavement removal and rock removal, except as otherwise specified.
4. Dewatering and disposal of surplus water.
5. Structural fill, backfill, and grading.
6. Replacement of unpaved roadways, and shrubbery plots.
7. Foundation and borrow materials, except as hereinafter specified.
8. Testing and placing system in operation.
9. Any material and equipment required to be installed and utilized for the tests.
10. Pipe, structures, pavement replacement, driveways and/or appurtenances included within the limits of lump sum work, unless otherwise shown.
11. Maintaining the existing quality of service during construction.
12. Appurtenant work as required for a complete and operable system.
13. Seeding and hydro mulching.
14. As-built Record Drawings, clean up, and miscellaneous work.

WASTEWATER SYSTEM MANHOLE REHABILITATION

PAY ITEM NO. 1 – MOBILIZATION

The work specified in this item consists of the preparatory work and operations in mobilizing for beginning work on the project This item includes, but is not limited to, those operations necessary for the movement of personnel, equipment, supplies and incidentals to and from the project site as a single occurrence per work site, and for the establishment of Subcontractor's temporary offices, buildings, safety equipment, first aid supplies, sanitary and other facilities, as required by these Specifications, special provisions, and State and local laws and regulations. The costs of bonds, permits and any required insurance, and any other preconstruction expense necessary for the start of the work, excluding the cost of construction materials, shall also be included in this item. Labor and equipment travel time from/to the site is included in this pay item.

The Contractor will be required to respond to the request of the Engineer or designated representative within ten (10) calendar days of notification. The Scope of Work will be developed by Project manager and will be executed in accordance with the terms and conditions of this contract.

The quantity of mobilization to be paid for under this item shall be measured as one unit each (EA) per job assignment. One (1) mobilization will be allowed for each job assignment, project, or work order no matter how many times the equipment must be relocated by loading, transporting, and unloading, or under its own power to complete the job assignment or project. Payment for mobilization shall not exceed 10 percent (10%) of the total Contract cost unless the Contractor can prove to the City that his actual mobilization cost exceeds 10 percent (10%).

PAY ITEMS NO. 2 – 14 – MAINTENANCE OF TRAFFIC

This work consists of maintaining traffic within the limits of the project for the duration of the construction period, including any temporary suspensions of the work. All Maintenance of Traffic (MOT) shall comply with FDOT Standard Plans Index 102 Series for Maintenance of Traffic. These pay items shall include labor and equipment to furnishing, installing and maintaining of traffic control and safety devices during construction; the construction and maintenance of any necessary detour facilities; providing necessary facilities for access to residences, businesses, pedestrian, schools, etc., control of dust and any other special requirements for safe and expeditious movement of traffic as may be called for on the plans. MOT shall include all of such facilities, devices and operations as are required for the safety and convenience of the public, as well as for minimizing public nuisance. The Contractor, however, shall not obstruct nor create a hazard to any traffic during the performance of the work and shall be responsible for repair of any damage to existing pavement or facilities caused by his operations. Traffic Control Devices include all types of barricades, arrow boards, signs, temporary pavement markers, lights, concrete barriers and permanent striping. All travel, equipment, labor overhead or any other associated expenses in transportation and setting out the MOT will be included in the price. All MOT line items for Multi-Lane work shall include all costs for items associated with the appropriate FDOT

Index (no separate payment for signs, barricades, etc. included with index will be allowed).

Maintenance of Traffic (MOT) shall be measured as units of work, each/day (EA/DY), hourly (HR) or by linear foot (LF) accordingly completed and priced on an individual project basis. The lump sum price for each assignment will be based on the specific MOT requirements for the assignment. The Contractor shall provide the Engineer with a proposal for the MOT that includes a breakdown of the costs, which are included in the lump sum price, and receive written acceptance from the Engineer prior to the installation of the MOT.

PAY ITEM	DESCRIPTION	UNITS
2	Flagmen (Per-Flagmen)	HR
3	Multi Lane, Lane Closures (FDOT Index No. 613)	EA/DY
4	Multi Lane, Intersection (FDOT Index No. 615)	EA/DY
5	Arrow Boards - 5' Minimum Horizontal Size	EA/DY
6	Variable Message Board	EA/DY
7	Concrete Barrier (FDOT Index No. 100)	EA/DY
8	Low Profile Barrier (FDOT Index No. 120)	EA/DY
9	Signs in Work Zones	EA/DY
10	6" Solid line Thermo Plastic - Permanent	LF
11	24" Stop Bar, Solid, Thermo Plastic, Perm.	LF
12	6" Skip line (6'-10' Skip) Thermo Plastic-Perm.	LF
13	Barricades Type III, with Warning Lights	EA/DY
14	Barricades Type I or II, with Warning Lights	EA/DY

PAY ITEM NO. 15 – REPAIR MANHOLE BENCH AND CHANNEL

Payment will be made per each manhole regardless of manhole diameter or depth. Payment shall include all materials, labor, equipment, and supplies necessary for the Repair of Manhole Bench and Channel, and specifically includes, but is not limited to, placement of temporary plugs, removal and disposal of all sand, rubble, deposits, and other accumulated debris, removal of deficient, deteriorated or unsound bench and channel materials, minor infiltration elimination in walls and base beneath the bench and channel, repair or replacement of bench and channels, cleaning, disposal of debris, restoration, and all other appurtenant work.

Separate Pay Items are provided for Traffic Control, Pump-Around Pumping Operation, and "Severe" Manhole Infiltration Elimination used in conjunction with this Work.

PAY ITEMS NO. 16 & 17 – REPAIR CHIMNEY, ADJUST/REPLACE MH CASTING

Payment will be made per each manhole regardless of manhole casting diameter or depth. Payment shall include all materials, labor, equipment, and supplies necessary for repair of chimney, and adjustment or replacement of manhole casting, and specifically includes, but is not limited to, locating and uncovering manhole, excavation, saw cutting, removal and disposal of existing asphalt pavement as needed, removal of existing manhole frame and cover casting, removal of deficient, deteriorated or unsound chimney materials, minor infiltration elimination, repair or replacement of chimney, reinstalling the existing manhole casting, delivering and

installing a new manhole casting of the same nominal size as the existing casting, backfill, restoration of surface to match existing conditions, cleaning, disposal of debris, and all other appurtenant work. Compensation for the Contractor to furnish new manhole castings will be made under separate Pay Items. The City may elect to furnish new manhole castings for the Contractor to install. The cost of City furnished manhole castings will be deducted from the Contract Price.

PAY ITEM	DESCRIPTION	UNITS
16	Repair Chimney, Asjust/Replace MH Casting - Unpaved	EA
17	Repair Chimney, Asjust/Replace MH Casting - Asphalt Pavement	EA

PAY ITEM NO. 18 – REBUILD CORBEL/CHIMNEY FOR TYPE B MANHOLE CASTING

Payment will be made per each manhole regardless of manhole casting diameter or depth. Payment shall include all materials, labor, equipment, and supplies necessary to rebuild and enlarge corbel/chimney for Type B manhole casting, and specifically includes, but is not limited to, additional pavement removal and excavation, removal of chimney/corbel materials and rebuilding chimney to match larger Type B manhole casting diameter, additional backfill, additional surface restoration, disposal of additional debris, and all other appurtenant work. This Pay Item is applicable only in conjunction with, and in addition to, the Work as listed under Pay Items 16 and 17.

PAY ITEMS NO. 19 & 20 – FURNISH MANHOLE CASTING

Payment will be made per each manhole casting for the applicable casting types listed in the Proposal. Payment shall include all materials, labor, equipment, and supplies necessary to furnish Type B manhole castings (nominal 34-inch diameter) or Type E manhole castings (nominal 23-inch diameter), and specifically includes, but is not limited to, purchasing and delivering the manhole casting materials to designated Work locations for use to replace existing manhole castings.

PAY ITEM	DESCRIPTION	UNITS
19	Furnish Manhole Casting – Type B	EA
20	Furnish Manhole Casting – Type E	EA

PAY ITEM NO. 21 – SEVERE MANHOLE INFILTRATION ELIMINATION

Payment will be made per each manhole regardless of the manhole diameter, depth, or the number of infiltration points sealed in each manhole. Payment shall include all materials, labor, equipment, and supplies necessary, and specifically includes, but is not limited to, surface preparation, drilling of grout holes into or through the manhole wall and floor, grout pipe penetrations, grout injection, removal of grout pipe and sealing grout holes, testing, restoration, and all other appurtenant work as specified.

PAY ITEM NO. 22 – CHEMICAL SEALING - GROUT

Payment will be made per gallon. This Pay item is applicable only in conjunction with Pay Item No. 21. Payment shall include all materials, equipment and labor for chemically sealing excessive infiltration defects for "Severe" Manhole Infiltration Elimination prior to manhole repairs.

PAY ITEMS NO. 23 & 24 – INTERNAL CHIMNEY SEALANT

Payment will be made per each manhole for the applicable manhole casting types listed in the Bid Form. Payment shall include all materials, labor, equipment, and supplies necessary for the installation of the internal chimney sealant for Type B manhole castings (nominal 34-inch diameter) or Type E manhole castings (nominal 23-inch diameter), and specifically includes, but is not limited to, cleaning, surface preparation, "Minor" infiltration elimination, applying the chimney sealant, testing, restoration, and all other appurtenant work.

PAY ITEM	DESCRIPTION	UNITS
23	Internal Chimney Sealant – Type B Manhole Casting	EA
24	Internal Chimney Sealant – Type E Manhole Casting	EA

PAY ITEM NO. 25 – ADDITIONAL ACCESS COST FOR MANHOLE COATING

Payment will be made per each Work location. A Work location shall be limited to the additional access costs for manhole coating Work to be performed on single or multiple proximate access structures or manholes regardless of the number of manholes coated. Measurement will be for a manhole coating installation where the manhole(s) is not readily accessible by standard equipment, e.g., when located in rear easements. Payment shall include all additional labor, equipment, materials and supplies to complete the manhole coating installation in locations with limited access.

PAY ITEMS NO. 26 – 33 – BYPASS PUMPING SETUP & OPERATION

This item provides for set up and operation of by-pass sewage pumping equipment and temporary piping as required and as described in the Standard Technical Specifications. This Pay Item is applicable on projects or repairs that have high flow or require an over night by pass operation.

The quantity to be measured for payment under this Pay Item will be the actual number of by-pass pumping set ups and operations, per part of day, required by the Engineer in the work. The minimum measurement for this pay item is eight (8) hours or 0.333 days and is measured from the time that the sewage is actually by-passed. This eight (8) hour minimum (0.333 days) includes full compensation for set up and operation for up to the first eight (8) hour period. Additional time will be in tenths of the day or twenty-four (24) hour period. The quantities determined shall be paid per day (DAY) or portion of day of by-pass pumping set up and operation.

PAY ITEM	DESCRIPTION	UNITS
26	Bypass Pumping, Set up, 6" - 10" diameter	EA
27	Bypass Pumping, Set up, 12" - 14" diameter	EA

28	Bypass Pumping, Set up, 15" - 21" diameter	EA
29	Bypass Pumping, Set up, 24" diameter	EA
30	Bypass Pumping, Operation, 6" - 10" diameter	DAY
31	Bypass Pumping, Operation, 12" - 14" diameter	DAY
32	Bypass Pumping, Operation, 15" - 21" diameter	DAY
33	Bypass Pumping, Operation, 24" diameter	DAY

PAY ITEMS NO. 34-36 – PURE CALCIUM ALUMINATE CEMENTITIOUS MH COATING, INITIAL

Payment will be made per each manhole for the applicable manhole diameters listed below, regardless of the overall manhole depth. Measurement will be from the bottom of the manhole to at least 3 vertical feet above the lowest pipe invert, or to the bottom of the cover frame if less than 3 vertical feet, and will be the average of minimum/maximum manhole diameter measured 12-inches above outgoing pipe rounded to the nearest foot. Payment shall include all materials, labor, equipment, and supplies necessary for installation, and specifically includes, but is not limited to, temporary plugs, cleaning, removal and disposal of all sand, rubble, deposits, and other accumulated debris, removal of steps, surface preparation, "Minor" infiltration elimination, sealing of all manhole wall penetrations, coating the lower 3 vertical feet of the manhole (includes invert, channel, bench, piping, CIPP liner interface, wall, and cone/corbel/chimney as applicable), testing, restoration, and all other appurtenant work as specified.

Separate Pay Items are provided for Maintenance of Traffic, Bypass Pumping Operation, and "Severe" Manhole Infiltration Elimination used in conjunction with this Work.

PAY ITEM	DESCRIPTION	UNITS
34	Pure Calcium Aluminate Cementitious MH Coating – 48” Diameter, Initial	EA
35	Pure Calcium Aluminate Cementitious MH Coating – 60” Diameter, Initial	EA
36	Pure Calcium Aluminate Cementitious MH Coating – 72” Diameter, Initial	EA

PAY ITEMS NO. 37-39 – PURE CALCIUM ALUMINATE CEMENTITIOUS MH COATING, ADDITIONAL

Payment will be made per vertical foot for the applicable manhole diameters listed below, regardless of the overall manhole depth. Measurement will be from the lowest pipe invert to the bottom of the cover frame minus the 3 vertical feet paid for under Pay Items 34 through 36. This Pay Item is applicable only in conjunction with, and includes the same Work as listed in Pay Items 34 through 36.

PAY ITEM	DESCRIPTION	UNITS
37	Pure Calcium Aluminate Cementitious MH Coating – 48” Diameter, Additional	VF
38	Pure Calcium Aluminate Cementitious MH Coating –	VF

	60” Diameter, Additional	
39	Pure Calcium Aluminate Cementitious MH Coating – 72” Diameter, Additional	VF

PAY ITEMS NO. 40-42 – REINFORCED POLYMER MH COATING, INITIAL

Payment will be made per each manhole for the applicable manhole diameters listed below, regardless of the overall manhole depth. Measurement will be from the bottom of the manhole to at least 3 vertical feet above the lowest pipe invert, or to the bottom of the cover frame if less than 3 vertical feet, and will be the average of minimum/maximum manhole diameter measured 12-inches above outgoing pipe rounded to the nearest foot. Payment shall include all materials, labor, equipment, and supplies necessary for installation, and specifically includes, but is not limited to, temporary plugs, cleaning, removal and disposal of all sand, rubble, deposits, and other accumulated debris, removal of steps, surface preparation, "Minor" infiltration elimination, sealing of all manhole wall penetrations, coating the lower 3 vertical feet of the manhole (includes invert, channel, bench, piping, CIPP liner interface, wall, and cone/corbel/chimney as applicable), testing, restoration, and all other appurtenant work as specified.

Separate Pay Items are provided for Maintenance of Traffic, Bypass Pumping Operation, and "Severe" Manhole Infiltration Elimination used in conjunction with this Work.

PAY ITEM	DESCRIPTION	UNITS
40	Reinforced Polymer MH Coating – 48” Diameter, Initial	EA
41	Reinforced Polymer MH Coating – 60” Diameter, Initial	EA
42	Reinforced Polymer MH Coating – 72” Diameter, Initial	EA

PAY ITEMS NO. 43-45 – REINFORCED POLYMER MH COATING, ADDITIONAL

Payment will be made per vertical foot for the applicable manhole diameters listed below, regardless of the overall manhole depth. Measurement will be from the lowest pipe invert to the bottom of the cover frame minus the 3 vertical feet paid for under Pay Items 40 through 42. This Pay Item is applicable only in conjunction with, and includes the same Work as listed in Pay Items 40 through 42.

PAY ITEM	DESCRIPTION	UNITS
43	Polymer MH Coating – 48” Diameter, Additional	VF
44	Polymer MH Coating – 60” Diameter, Additional	VF
45	Polymer MH Coating – 72” Diameter, Additional	VF

PAY ITEMS NO. 46-48 – CONCRETE CURB REPLACEMENT

Payment for all work included in this Pay Item will be made at the applicable Contract unit price bid per linear foot for removal of existing curbing and for furnishing and placing curb and gutter as shown on the Contract Drawings and listed on the Bid Form. Measurement will be per actual number of linear feet of curbing installed. Payment shall represent full compensation for removal of existing curb and all labor, material and equipment for compacting subgrade, forming,

furnishing, placing the concrete, and finishing as specified and all incidentals necessary for completion of this Pay Item.

PAY ITEM	DESCRIPTION	UNITS
46	Concrete Curb Replacement – Type D	LF
47	Concrete Curb Replacement – Type F	LF
48	Concrete Curb Replacement – Miami Curb	LF

PAY ITEMS NO. 49 & 50 – CONCRETE SIDEWALK REPLACEMENT

Payment will be made per square yard for the applicable sidewalk thickness listed below, regardless of the overall length. Measurement will be for complete sections. Payment shall include all materials, labor, equipment, and supplies necessary for concrete sidewalk replacement, and specifically includes, but is not limited to, excavation, saw cutting and removal of existing sidewalk, installation of replacement sidewalk to match cross section and slope of adjacent sidewalk, expansion joint material, contraction joints, backfill, restoration, cleaning, disposal of debris, and all other appurtenant work as specified.

PAY ITEM	DESCRIPTION	UNITS
49	Concrete Sidewalk Replacement – 4” Thick	SY
50	Concrete Sidewalk Replacement – 6” Thick	SY

PAY ITEMS NO. 51 & 52 – CONCRETE DRIVEWAY REPLACEMENT

Payment will be made per square yard for the applicable driveway thickness listed below, regardless of the overall length. Measurement will be for complete section. Payment shall include all materials, labor, equipment, and supplies necessary for concrete driveway replacement, and specifically includes, but is not limited to, excavation, saw cutting and removal of existing driveway, installation of replacement driveway to match cross section and slope of existing driveway, expansion joint material, contraction joints, backfill, restoration, cleaning, disposal of debris, and all other appurtenant work as specified.

PAY ITEM	DESCRIPTION	UNITS
51	Concrete Driveway Replacement – 4” Thick	SY
52	Concrete Driveway Replacement – 6” Thick	SY

PAY ITEM NO. 53 – INFLOW DISH

Payment for all work included under this Pay Item will be made at the Contract unit price bid for furnishing and installing each inflow dish as shown on the Contract Drawings and listed on the Bid Form. Payment will be made for each inflow dish installed and will represent full compensation for all labor, material, excavation, including rock, bedding, backfill, compaction, sheeting, testing and equipment required to complete this Pay Item. Included in this Pay Item, but not limited to, are all 304 stainless steel inflow dishes, as shown in the Contract Drawings. Submittal shall include a complete bill of materials for all equipment, showing dimensions and materials of construction of

all components, verifying that product will meet the standards specified in the Technical Specifications and Contract Drawings.

WASTEWATER SYSTEM PIPE LINING

PAY ITEM NO. 1 – MOBILIZATION

The work specified in this item consists of the preparatory work and operations in mobilizing for beginning work on the project This item includes, but is not limited to, those operations necessary for the movement of personnel, equipment, supplies and incidentals to and from the project site as a single occurrence per work site, and for the establishment of Subcontractor's temporary offices, buildings, safety equipment, first aid supplies, sanitary and other facilities, as required by these Specifications, special provisions, and State and local laws and regulations. The costs of bonds, permits and any required insurance, and any other preconstruction expense necessary for the start of the work, excluding the cost of construction materials, shall also be included in this item. Labor and equipment travel time from/to the site is included in this pay item.

The Contractor will be required to respond to the request of the Engineer, or designated representative within ten (10) calendar days of notification. The Scope of Work will be developed by Project manager and will be executed in accordance with the terms and conditions of this contract.

The quantity of mobilization to be paid for under this item shall be measured as one unit each (EA) per job assignment. One (1) mobilization will be allowed for each job assignment, project, or work order no matter how many times the equipment must be relocated by loading, transporting and unloading, or under its own power to complete the job assignment or project. Payment for mobilization shall not exceed 10 percent (10%) of the total Contract cost unless the Contractor can prove to the City that his actual mobilization cost exceeds 10 percent (10%).

PAY ITEMS NO. 2 – 14 – MAINTENANCE OF TRAFFIC

This work consists of maintaining traffic within the limits of the project for the duration of the construction period, including any temporary suspensions of the work. All Maintenance of Traffic (MOT) shall comply with FDOT Standard Plans Index 102 Series for Maintenance of Traffic. These pay items shall include labor and equipment to furnishing, installing and maintaining of traffic control and safety devices during construction; the construction and maintenance of any necessary detour facilities; providing necessary facilities for access to residences, businesses, pedestrian, schools, etc., control of dust and any other special requirements for safe and expeditious movement of traffic as may be called for on the plans. MOT shall include all of such facilities, devices and operations as are required for the safety and convenience of the public, as well as for minimizing public nuisance. The Contractor, however, shall not obstruct nor create a hazard to any traffic during the performance of the work and shall be responsible for repair of any damage to existing pavement or facilities caused by his operations. Traffic Control Devices include all types of barricades, arrow boards, signs, temporary pavement markers, lights, concrete barriers and permanent striping. All travel, equipment, labor overhead or any other associated expenses in transportation and setting out the MOT will be included in the price. All MOT line items for Multi-Lane work shall include all costs for items associated with the appropriate FDOT Index (no separate payment for signs, barricades, etc. included with index will be allowed).

Maintenance of Traffic (MOT) shall be measured as units of work, each/day (EA/DY), hourly (HR) or by linear foot (LF) accordingly completed and priced on an individual project basis. The lump sum price for each assignment will be based on the specific MOT requirements for the assignment. The Contractor shall provide the Engineer with a proposal for the MOT that includes a breakdown of the costs, which are included in the lump sum price, and receive written acceptance from the Engineer prior to the installation of the MOT.

PAY ITEM	DESCRIPTION	UNITS
2	Flagmen (Per-Flagmen)	HR
3	Multi Lane, Lane Closures (FDOT Index No. 613)	EA/DY
4	Multi Lane, Intersection (FDOT Index No. 615)	EA/DY
5	Arrow Boards - 5' Minimum Horizontal Size	EA/DY
6	Variable Message Board	EA/DY
7	Concrete Barrier (FDOT Index No. 100)	EA/DY
8	Low Profile Barrier (FDOT Index No. 120)	EA/DY
9	Signs in Work Zones	EA/DY
10	6" Solid line Thermo Plastic - Permanent	LF
11	24" Stop Bar, Solid, Thermo Plastic, Perm.	LF
12	6" Skip line (6'-10' Skip) Thermo Plastic-Perm.	LF
13	Barricades Type III, with Warning Lights	EA/DY
14	Barricades Type I or II, with Warning Lights	EA/DY

PAY ITEMS NO. 15 – 22 – CIPP MAIN LINER

Payment will be made per linear foot for the applicable pipe diameters and minimum thicknesses listed below, regardless of the depth or overall length. Measurement will be from the upstream manhole to the downstream manhole centerlines. Payment shall include all materials, labor, equipment, and supplies necessary for the CIPP Main Liner installation, and specifically includes, but is not limited to, pre-rehabilitation CCTV inspection, liner sampling and storage of samples for testing, sealing liner connections at manholes, matching existing manhole lining to the CIPP liner, matching existing flow channels and surfacing to the liner to minimize turbulence, cleaning, removal and disposal of all sand, rubble, deposits, and other accumulated debris after liner installation, post-rehabilitation CCTV inspection video and log, restoration, and all other appurtenant work as specified.

PAY ITEM	DESCRIPTION	UNITS
15	CIPP Main Liner 6” Diameter – 6.0 mm Thickness	LF
16	CIPP Main Liner 8” Diameter – 6.0 mm Thickness	LF
17	CIPP Main Liner 10” Diameter – 6.0 mm Thickness	LF
18	CIPP Main Liner 12” Diameter – 6.0 mm Thickness	LF
19	CIPP Main Liner 15” Diameter – 7.5 mm Thickness	LF
20	CIPP Main Liner 18” Diameter – 9.0 mm Thickness	LF
21	CIPP Main Liner 21” Diameter – 9.0 mm Thickness	LF
22	CIPP Main Liner 24” Diameter – 10.5 mm Thickness	LF

PAY ITEMS NO. 23 – 30 – CIPP MAIN LINER THICKNESS VARIANCE

Payment for CI PP Main Liner Thickness Variance will be made per linear foot for the applicable pipe diameters listed in the Proposal, regardless of depth or overall length. Liner thickness may be varied due to field conditions requiring a change in the specified minimum thickness. The per linear foot price for CIPP Main Liner Thickness Variance will be added to, or deducted from, the per linear foot price of the Main Liner for the applicable pipe diameter listed in the Bid Form (Pay Items 15 through 22). The Main Liner per linear foot price will be adjusted for each 1.5 mm thickness variance increment. Liner thickness shall be in accordance with Technical Specification Section headed "Cured-In-Place-Pipe (CIPP) " unless otherwise approved by the Engineer in writing.

PAY ITEM	DESCRIPTION	UNITS
23	CIPP Main Liner 6” Diameter – Thickness Variance + 1.5 mm	LF
24	CIPP Main Liner 8” Diameter – Thickness Variance + 1.5 mm	LF
25	CIPP Main Liner 10” Diameter – Thickness Variance + 1.5 mm	LF
26	CIPP Main Liner 12” Diameter – Thickness Variance + 1.5 mm	LF
27	CIPP Main Liner 15” Diameter – Thickness Variance + 1.5 mm	LF
28	CIPP Main Liner 18” Diameter – Thickness Variance + 1.5 mm	LF
29	CIPP Main Liner 21” Diameter – Thickness Variance + 1.5 mm	LF
30	CIPP Main Liner 24” Diameter – Thickness Variance + 1.5 mm	LF

PAY ITEMS NO. 31 – 38 – BYPASS PUMPING SETUP & OPERATION

This item provides for set up and operation of by-pass sewage pumping equipment and temporary piping as required and as described in the Standard Technical Specifications. This Pay Item is applicable on projects or repairs that have high flow or require an over night by pass operation.

The quantity to be measured for payment under this Pay Item will be the actual number of by-pass pumping set ups and operations, per part of day, required by the Engineer in the work. The minimum measurement for this pay item is eight (8) hours or 0.333 days and is measured from the time that the sewage is actually by-passed. This eight (8) hour minimum (0.333 days) includes full compensation for set up and operation for up to the first eight (8) hour period. Additional time will be in tenths of the day or twenty-four (24) hour period. The quantities determined shall be paid per day (DAY) or portion of day of by-pass pumping set up and operation.

PAY ITEM	DESCRIPTION	UNITS
31	Bypass Pumping, Set up, 6" - 10" diameter	EA
32	Bypass Pumping, Set up, 12" - 14" diameter	EA
33	Bypass Pumping, Set up, 15" - 21" diameter	EA
34	Bypass Pumping, Set up, 24" diameter	EA
35	Bypass Pumping, Operation, 6" - 10" diameter	DAY
36	Bypass Pumping, Operation, 12" - 14" diameter	DAY
37	Bypass Pumping, Operation, 15" - 21" diameter	DAY
38	Bypass Pumping, Operation, 24" diameter	DAY

PAY ITEMS NO. 39-42 – NORMAL CLEANING

Payment for Normal Cleaning will be made per linear foot for the applicable pipe diameters listed in the Bid Form, regardless of depth or overall length. Measurement will be from the upstream manhole to the downstream manhole centerlines and based on the average debris depth. Payment shall include all materials, labor, equipment, and supplies necessary for Normal Cleaning, and specifically includes, but is not limited to, the complete removal and disposal of all accumulated debris within the pipe including sludge, dirt, rocks, sand, rubble, and other materials and obstructions, restoration, and all other appurtenant work as specified. Separate Pay Items are provided for Specialty Cleaning.

PAY ITEM	DESCRIPTION	UNITS
39	Normal Cleaning – 6” and 8” Diameter	LF
40	Normal Cleaning – 10” and 12” Diameter	LF
41	Normal Cleaning – 15” and 18” Diameter	LF
42	Normal Cleaning – 21” and 24” Diameter	LF

PAY ITEMS NO. 43-46 – SPECIALTY CLEANING

Payment will be made per linear foot for the applicable pipe diameters listed in the Bid Form, regardless of depth or overall length. Measurement will be based on a minimum of 50 linear feet of pipe, or the actual length of the Specialty Cleaning performed, but not necessarily for the entire pipe segment length. Specialty Cleaning of only joints within a pipe segment, or portion thereof, shall count as 2.5 feet of equivalent pipe length (For Example: 400 feet of 8" pipe with 5 ft joints, clean all joints =80 joints x 2.5 ft =200 feet of specialty cleaning). Equivalent joint length shall not be counted in addition to the length of a pipe segment, or portion thereof, where continuous Specialty Cleaning has been performed. Payment shall include all materials, labor, equipment, and supplies necessary for Specialty Cleaning of wastewater pipe, and specifically includes, but is not limited to, the complete removal and disposal of all accumulated debris within the pipe including grease, roots, joint sealant, tuberculation, and other adherent deposits through the use of special equipment, restoration, and all other appurtenant work as specified. Specialty Cleaning is in addition to Normal Cleaning as described in Pay Items 39 through 42.

PAY ITEM	DESCRIPTION	UNITS
43	Normal Cleaning – 6” and 8” Diameter	LF
44	Normal Cleaning – 10” and 12” Diameter	LF

45	Normal Cleaning – 15” and 18” Diameter	LF
46	Normal Cleaning – 21” and 24” Diameter	LF

PAY ITEMS NO. 47-49 – CHEMICAL SEALING OF HOST PIPE

Payment will be made per each host pipe for the applicable pipe diameters listed in the Bid Form, regardless of depth, overall length, or the number of infiltration points sealed. Measurement will be for a host pipe between manholes. Payment shall include all materials, labor, equipment and supplies necessary for the Chemical Sealing of Host Pipe, and specifically includes, but is not limited to, sealing excessive infiltration at pipe joints and other defects, disposal of debris, post-rehabilitation CCTV inspection video and log, restoration, and all other appurtenant work as specified. A separate Pay Item is provided Chemical Sealing - Grout material.

PAY ITEM	DESCRIPTION	UNITS
47	Chemical Sealing of Host Pipe – 10” Diameter and Less	EA
48	Chemical Sealing of Host Pipe – 12” and 15” Diameter	EA
49	Chemical Sealing of Host Pipe – 18” to 24” Diameter	EA

PAY ITEM NO. 50 – CHEMICAL SEALING - GROUT

Payment will be made per gallon. This Pay item is applicable only in conjunction with Pay Items 47 through 49. Payment shall include all materials, equipment and labor for chemically sealing excessive infiltration at pipe joints and other defects at specified locations for Chemical Sealing of Host Pipe prior to CIPP liner installation.

PAY ITEM NO. 51 – REMOVAL & SEALING OF PROTRUDING SERVICE CONNECTIONS

Payment will be made per each service regardless of the connection diameter or main pipe diameter. Payment shall include all materials, labor, equipment and supplies necessary for the Removal & Sealing of Protruding Connections, and specifically includes, but is not limited to, removing protruding lateral by internal cutting or other remote methods, grouting the main/lateral connection, disposal of debris, post-rehabilitation CCTV inspection video and log, restoration, and all other appurtenant work as specified.

PAY ITEM NO. 52 – ADDITIONAL ACCESS COST MAIN LINER

Payment for Additional Access Cost Main Liner will be made per each access. Measurement will be for a liner installation where both the upstream and downstream manhole are not readily accessible by standard equipment, e.g., when located in rear easements. Payment shall include all additional labor, equipment, materials and supplies to complete the CIPP Main Liner installation in locations with limited access. The Contractor shall attempt to schedule and stage the Work to permit the lining of multiple, contiguous pipe segments from an accessible manhole where feasible.

PAY ITEM NO. 53 – SERVICE RECONNECTION

Payment will be made per each service regardless of the connection diameter or host pipe diameter, and regardless of depth or overall length of the host pipe. Payment shall include all materials, labor, equipment, and supplies necessary for the service reconnection, and specifically includes, but is not limited to, reconnecting service lateral by internal cutting or other remote methods, grouting the annular space between the liner and host pipe at the lateral connection and the first 18-inches of the service lateral, post-rehabilitation CCTV inspection video and log, disposal of debris, restoration, and all other appurtenant work as specified. No additional payment will be made for service reconnections made by excavation.

PAY ITEM NO. 54 – CIPP LINER TESTING

Payment will be made per each test. Measurement will be for a set of tests completed for a liner installation and accepted by the Engineer. Payment shall include all materials, labor, equipment, supplies, and expenses necessary for CIPP Liner Testing, and specifically includes, but is not limited to, preparing samples, laboratory testing, submitting the results to the Engineer, and all other appurtenant work as specified. The cost to obtain and store samples for testing, and any retesting of samples is not included in this Pay Item.

WASTEWATER SYSTEM POINT REPAIRS

PAY ITEM NO. 1 – MOBILIZATION FOR ROUTINE RESPONSE

The work specified in this item consists of the preparatory work and operations in mobilizing for beginning work on the project This item includes, but is not limited to, those operations necessary for the movement of personnel, equipment, supplies and incidentals to and from the project site as a single occurrence per work site, and for the establishment of Subcontractor's temporary offices, buildings, safety equipment, first aid supplies, sanitary and other facilities, as required by these Specifications, special provisions, and State and local laws and regulations. The costs of bonds, permits and any required insurance, and any other preconstruction expense necessary for the start of the work, excluding the cost of construction materials, shall also be included in this item. Labor and equipment travel time from/to the site is included in this pay item.

For routine work, as identified by the Engineer or his designee, the Contractor will be required to respond to the request of the Engineer, or designated representative within ten (10) calendar days of notification. The Scope of Work will be developed by Project manager and will be executed in accordance with the terms and conditions of this contract.

The quantity of mobilization to be paid for under this item shall be measured as one unit each (EA) per job assignment. One (1) mobilization will be allowed for each job assignment, project, or work order no matter how many times the equipment must be relocated by loading, transporting and unloading, or under its own power to complete the job assignment or project.

PAY ITEM NO. 2 – MOBILIZATION FOR EMERGENCY RESPONSE

The work specified in this item consists of the preparatory work and operations in mobilizing for beginning work on the project This item includes, but is not limited to, those operations necessary for the movement of personnel, equipment, supplies and incidentals to and from the project site as a single occurrence per work site, and for the establishment of Subcontractor's temporary offices, buildings, safety equipment, first aid supplies, sanitary and other facilities, as required by these Specifications, special provisions, and State and local laws and regulations. The costs of bonds, permits and any required insurance, and any other preconstruction expense necessary for the start of the work, excluding the cost of construction materials, shall also be included in this item. Labor and equipment travel time from/to the site is included in this pay item.

For emergency work, as identified by the Engineer or his designee, the Contractor will be required to respond to the request of the Engineer, or designated representative within ten (10) calendar days of notification. The Scope of Work will be developed by Project manager and will be executed in accordance with the terms and conditions of this contract.

The quantity of mobilization to be paid for under this item shall be measured as one unit each (EA) per job assignment. One (1) mobilization will be allowed for each job assignment, project, or work order no matter how many times the equipment must be relocated by loading, transporting and unloading, or under its own power to complete the job assignment or project.

PAY ITEMS NO. 3 – 15 – MAINTENANCE OF TRAFFIC

This work consists of maintaining traffic within the limits of the project for the duration of the construction period, including any temporary suspensions of the work. All Maintenance of Traffic (MOT) shall comply with FDOT Standard Plans Index 102 Series for Maintenance of Traffic. These pay items shall include labor and equipment to furnishing, installing and maintaining of traffic control and safety devices during construction; the construction and maintenance of any necessary detour facilities; providing necessary facilities for access to residences, businesses, pedestrian, schools, etc., control of dust and any other special requirements for safe and expeditious movement of traffic as may be called for on the plans. MOT shall include all of such facilities, devices and operations as are required for the safety and convenience of the public, as well as for minimizing public nuisance. The Contractor, however, shall not obstruct nor create a hazard to any traffic during the performance of the work and shall be responsible for repair of any damage to existing pavement or facilities caused by his operations. Traffic Control Devices include all types of barricades, arrow boards, signs, temporary pavement markers, lights, concrete barriers and permanent striping. All travel, equipment, labor overhead or any other associated expenses in transportation and setting out the MOT will be included in the price. All MOT line items for Multi-Lane work shall include all costs for items associated with the appropriate FDOT Index (no separate payment for signs, barricades, etc. included with index will be allowed).

Maintenance of Traffic (MOT) shall be measured as units of work, each/day (EA/DY), hourly (HR) or by linear foot (LF) accordingly completed and priced on an individual project basis. The lump sum price for each assignment will be based on the specific MOT requirements for the assignment. The Contractor shall provide the Engineer with a proposal for the MOT that includes a breakdown of the costs, which are included in the lump sum price, and receive written acceptance from the Engineer prior to the installation of the MOT.

PAY ITEM	DESCRIPTION	UNITS
3	Flagmen (Per-Flagmen)	HR
4	Multi Lane, Lane Closures (FDOT Index No. 613)	EA/DY
5	Multi Lane, Intersection (FDOT Index No. 615)	EA/DY
6	Arrow Boards - 5' Minimum Horizontal Size	EA/DY
7	Variable Message Board	EA/DY
8	Concrete Barrier (FDOT Index No. 100)	EA/DY
9	Low Profile Barrier (FDOT Index No. 120)	EA/DY
10	Signs in Work Zones	EA/DY
11	6" Solid line Thermo Plastic - Permanent	LF
12	24" Stop Bar, Solid, Thermo Plastic, Perm.	LF
13	6" Skip line (6'-10' Skip) Thermo Plastic-Perm.	LF
14	Barricades Type III, with Warning Lights	EA/DY
15	Barricades Type I or II, with Warning Lights	EA/DY

PAY ITEM NO. 16 – AS-BUILT SURVEY

Payment for all work included, but is not limited to, under this Pay Item shall represent full

compensation in accordance with the lump sum price bid for as-built record drawings or any other required certifications to put the proposed system in service. All items are subject to approval by the Engineer.

The quantity to be paid for under this pay item shall per as-built survey completed by a professional surveyor based on the linear foot of sewer main installed.

PAY ITEM NO. 17 – EXCAVATION, UNSUITABLE MATERIAL

The work specified in this item describes the removal of soil unsuitable for a proper foundation, encountered at trench grade. The unsuitable soil shall be removed and disposed of the full width of the trench and to the depth required by the Engineer and replaced with approved bedding material. The backfill shall be thoroughly compacted and shaped to form the pipe bed.

The quantity to be paid for under this Item shall be the volume in cubic yards (CY), computed by the average end area method, of the unsuitable material removed within the limits of depth shown on the Plans or as directed by the Engineer or his representative.

PAY ITEMS NO. 18 & 19 – SHEETING AND BRACING, ADDITIONAL

The quantities to be paid for under this item shall be the number of square feet of sheeting installed in addition to 6’ of depth. The quantities to be paid for under this item shall be based on the square feet of sheeting installed and accepted.

PAY ITEM	DESCRIPTION	UNITS
18	Sheeting & Bracing (Left in Place)	SF
19	Sheeting & Bracing, Pipe Trenches (Removed)	SF

PAY ITEMS NO. 20 - 25 – WELL POINT DEWATERING INITIAL

Measurement and payment of this pay item is based on the set up of dewatering equipment as required by the Contractor and allowed or directed by the Engineer to perform contracted work in accordance with the Technical Specifications. The work shall include all labor, equipment and materials, testing, and any required incidentals necessary to completely install, monitor and operate the dewatering system including the placement of up to twenty (20) well points to the various depths listed in the proposal per job assignment. The dewatering system shall stabilize the excavation and remain in operation until backfilling operations are complete. This pay item shall include the maintenance, repairs, pumps, fueling, oiling greasing, and other operational support procedures and supplies required for the operation of the system.

Well point dewatering is an authorized pay item only when the installation is below 6 feet in depth and site conditions warrant or on emergency response work where site conditions warrant as directed by the City representative.

The quantities to be paid for under this item shall be based on the depth of each (EA) dewatering

system per job assignment, installed and accepted.

PAY ITEM	DESCRIPTION	UNITS
20	Well Point Dewatering Initial – 6'-8' Deep	EA
21	Well Point Dewatering Initial – 8'-10' Deep	EA
22	Well Point Dewatering Initial – 10'-12' Deep	EA
23	Well Point Dewatering Initial – 12'-14' Deep	EA
24	Well Point Dewatering Initial – 14'-16' Deep	EA
25	Well Point Dewatering Initial – >16' Deep	EA

PAY ITEMS NO. 26 – 31 – WELL POINT DEWATERING ADDITIONAL

This item provides all labor, materials and equipment for the placement and operation of additional well points over and above the twenty (20) well points paid for under Pay Items 20-25. The work includes connection of the well points to the dewatering pumping equipment.

The quantity to be paid under this item will be the actual number of each (EA) well points placed and operated in the work as directed by Engineer for the various depths listed in the proposal less the twenty (20) paid for under Pay Items 20-25.

PAY ITEM	DESCRIPTION	UNITS
26	Well Point Dewatering Additional – 6'-8' Deep	EA
27	Well Point Dewatering Additional – 8'-10' Deep	EA
28	Well Point Dewatering Additional – 10'-12' Deep	EA
29	Well Point Dewatering Additional – 12'-14' Deep	EA
30	Well Point Dewatering Additional – 14'-16' Deep	EA
31	Well Point Dewatering Additional – >16' Deep	EA

PAY ITEMS NO. 32 – 35 – JACK & BORE

The work consists of furnishing all labor, equipment and materials and installing the crossing listed on the Bid Form by the jack and bore method in accordance with the specifications. The unit price shall include all costs necessary to install the crossing at the specified depth and size, including survey layout (based upon property monuments established by others), protection of property, materials, dewatering, pavement cutting, launching and receiving pits, exploratory pits, restrained joints, carrier pipe, tracer wire, tracer wire testing, casing pipe, casing spacers, casing end seals, fitting material including joints and jointing material, bracing, utility crossings, barricades, clearing, grubbing and stripping of the right-of-way, trenching, bedding and backfilling, protection of existing utilities; pigging, flushing and cleaning, pressure testing and As-built documentation. Surface restoration if specified or directed, will be paid for under other Pay Items.

The quantity for furnishing and installing the pipe or casing shall be made on a per linear foot basis as measured horizontally above the centerline of the casing including the length of four (4) feet beyond the edge of pavement or back of the concrete curb from each side of the road or driveway.

PAY ITEM	DESCRIPTION	UNITS
32	Jack & Bore 12” x 0.188” Steel Casing (6” GS)	LF
33	Jack & Bore 16” x 0.219” Steel Casing (8” GS)	LF
34	Jack & Bore 20” x 0.250” Steel Casing (10” GS)	LF
35	Jack & Bore 24” x 0.281” Steel Casing (12” GS)	LF

PAY ITEMS NO. 36 – 41 – DIRECTIONAL DRILL

The work consists of furnishing and installing underground sewer mains using the horizontal directional drilling (HDD) method of installation. This work shall include all services, equipment, materials, labor, installation of two 14 gauge minimum tracer wires, tracer wire testing, appurtenances, DI/HDPE mechanical joint adapters, pipe and joint restraints for connections to fittings, materials above or below ground along pipeline alignment; joints and jointing materials, bentonite clay slurry seal, launching and receiving pits, exploratory pits; bracing, bedding and backfill, disposal of spoil; pressure testing; pigging, flushing, cleaning erosion protection and control, surface grading, and all other related and necessary materials for the complete and proper installation, testing, and restoration of underground sewer mains

Measurement for payment for furnishing and installing HDD pipe for drill depths up to 20-foot-deep shall be made on a per linear foot (LF) basis as measured horizontally on the ground above the pipe centerline through valves and fittings for all pipe. Measurement for payment for finishing and installation HDD pipe for drill depths greater than 20-foot depth shall be made on a per linear foot (LF) basis of the actual length of pipe installed.

PAY ITEM	DESCRIPTION	UNITS
36	2” Directional Drill HDPE DR 9, IPS	LF
37	4” Directional Drill HDPE DR 11, DIPS	LF
38	6” Directional Drill HDPE DR 11, DIPS	LF
39	8” Directional Drill HDPE DR 11, DIPS	LF
40	10” Directional Drill HDPE DR 11, DIPS	LF
41	12” Directional Drill HDPE DR 11, DIPS	LF

PAY ITEMS NO. 42 – 146 – GRAVITY SANITARY SEWER

The work consists of furnishing all labor, equipment and materials for installing pipe as shown on the plans or directed by the Engineer. All ductile iron pipe shall have polyethylene encasement. The unit price shall include all costs necessary to install the pipe including survey layout (based upon property monuments established by others), clearing and grubbing, excavation, sheeting/shoring for excavation up to 6-ft deep, bracing, dewatering for excavations up to 6-ft deep, structural fill, material, polyethylene wrap on ductile iron pipe, testing, pavement cutting, trenching, utility crossings, barricades, clearing of the right-of-way, protection of property, backfilling, field layout, etc. Restoration will be paid for under separate pay items. Work performed for Point Repairs of gravity sewer pipes will be paid for under separate pay items.

The quantities of pipe to be paid for under this item shall be the length in linear feet of pipe measured along the centerline of the pipe through manholes in place, completed, tested, and accepted.

PAY ITEM	DESCRIPTION	UNITS
42	6" PVC Pipe, C-900 DR 18 (Gravity Sewer) 0' - 6' Depth	LF
43	6" PVC Pipe, C-900 DR 18 (Gravity Sewer) 6' - 8' Depth	LF
44	6" PVC Pipe, C-900 DR 18 (Gravity Sewer) 8' - 10' Depth	LF
45	6" PVC Pipe, C-900 DR 18 (Gravity Sewer) 10' - 12' Depth	LF
46	6" PVC Pipe, C-900 DR 18 (Gravity Sewer) 12' - 14' Depth	LF
47	6" PVC Pipe, C-900 DR 18 (Gravity Sewer) 14' - 16' Depth	LF
48	6" PVC Pipe, C-900 DR 18 (Gravity Sewer) 16' - 18' Depth	LF
49	8" DI Pipe, CL 350 (Gravity Sewer) 0' - 6' Depth	LF
50	8" DI Pipe, CL 350 (Gravity Sewer) 6' - 8' Depth	LF
51	8" DI Pipe, CL 350 (Gravity Sewer) 8' - 10' Depth	LF
52	8" DI Pipe, CL 350 (Gravity Sewer) 10' - 12' Depth	LF
53	8" DI Pipe, CL 350 (Gravity Sewer) 12' - 14' Depth	LF
54	8" DI Pipe, CL 350 (Gravity Sewer) 14' - 16' Depth	LF
55	8" DI Pipe, CL 350 (Gravity Sewer) 16' - 18' Depth	LF
56	8" PVC Pipe, C-900 DR 18 (Gravity Sewer) 0' - 6' Depth	LF
57	8" PVC Pipe, C-900 DR 18 (Gravity Sewer) 6' - 8' Depth	LF
58	8" PVC Pipe, C-900 DR 18 (Gravity Sewer) 8' - 10' Depth	LF
59	8" PVC Pipe, C-900 DR 18 (Gravity Sewer) 10' - 12' Depth	LF
60	8" PVC Pipe, C-900 DR 18 (Gravity Sewer) 12' - 14' Depth	LF
61	8" PVC Pipe, C-900 DR 18 (Gravity Sewer) 14' - 16' Depth	LF
62	8" PVC Pipe, C-900 DR 18 (Gravity Sewer) 16' - 18' Depth	LF
63	10" DI Pipe, CL 350 (Gravity Sewer) 0' - 6' Depth	LF

64	10" DI Pipe, CL 350 (Gravity Sewer) 6' - 8' Depth	LF
65	10" DI Pipe, CL 350 (Gravity Sewer) 8' - 10' Depth	LF
66	10" DI Pipe, CL 350 (Gravity Sewer) 10' - 12' Depth	LF
67	10" DI Pipe, CL 350 (Gravity Sewer) 12' - 14' Depth	LF
68	10" DI Pipe, CL 350 (Gravity Sewer) 14' - 16' Depth	LF
69	10" DI Pipe, CL 350 (Gravity Sewer) 16' - 18' Depth	LF
70	10" PVC Pipe, C-900 DR 18 (Gravity Sewer) 0' -6' Depth	LF
71	10" PVC Pipe, C-900 DR 18 (Gravity Sewer) 6' - 8' Depth	LF
72	10" PVC Pipe, C-900 DR 18 (Gravity Sewer) 8' - 10' Depth	LF
73	10" PVC Pipe, C-900 DR 18 (Gravity Sewer) 10' - 12' Depth	LF
74	10" PVC Pipe, C-900 DR 18 (Gravity Sewer) 12' - 14' Depth	LF
75	10" PVC Pipe, C-900 DR 18 (Gravity Sewer) 14' - 16' Depth	LF
76	10" PVC Pipe, C-900 DR 18 (Gravity Sewer) 16' - 18' Depth	LF
77	12" DI Pipe, CL 350 (Gravity Sewer) 0' - 6' Depth	LF
78	12" DI Pipe, CL 350 (Gravity Sewer) 6' - 8' Depth	LF
79	12" DI Pipe, CL 350 (Gravity Sewer) 8' - 10' Depth	LF
80	12" DI Pipe, CL 350 (Gravity Sewer) 10' - 12' Depth	LF
81	12" DI Pipe, CL 350 (Gravity Sewer) 12' - 14' Depth	LF
82	12" DI Pipe, CL 350 (Gravity Sewer) 14' - 16' Depth	LF
83	12" DI Pipe, CL 350 (Gravity Sewer) 16' - 18' Depth	LF
84	12" PVC Pipe, C-900 DR 18 (Gravity Sewer) 0' ' 6' Depth	LF
85	12" PVC Pipe, C-900 DR 18 (Gravity Sewer) 6' - 8' Depth	LF
86	12" PVC Pipe, C-900 DR 18 (Gravity Sewer) 8' - 10' Depth	LF
87	12" PVC Pipe, C-900 DR 18 (Gravity Sewer) 10' - 12' Depth	LF

88	12" PVC Pipe, C-900 DR 18 (Gravity Sewer) 12' - 14' Depth	LF
89	12" PVC Pipe, C-900 DR 18 (Gravity Sewer) 14' - 16' Depth	LF
90	12" PVC Pipe, C-900 DR 18 (Gravity Sewer) 16' - 18' Depth	LF
91	16" DI Pipe, CL 350 (Gravity Sewer) 0' - 6' Depth	LF
92	16" DI Pipe, CL 350 (Gravity Sewer) 6' - 8' Depth	LF
93	16" DI Pipe, CL 350 (Gravity Sewer) 8' - 10' Depth	LF
94	16" DI Pipe, CL 350 (Gravity Sewer) 10' - 12' Depth	LF
95	16" DI Pipe, CL 350 (Gravity Sewer) 12' - 14' Depth	LF
96	16" DI Pipe, CL 350 (Gravity Sewer) 14' - 16' Depth	LF
97	16" DI Pipe, CL 350 (Gravity Sewer) 16' - 18' Depth	LF
98	16" PVC Pipe, C-905 DR 18 (Gravity Sewer) 0' - 6' Depth	LF
99	16" PVC Pipe, C-905 DR 18 (Gravity Sewer) 6' - 8' Depth	LF
100	16" PVC Pipe, C-905 DR 18 (Gravity Sewer) 8' - 10' Depth	LF
101	16" PVC Pipe, C-905 DR 18 (Gravity Sewer) 10' - 12' Depth	LF
102	16" PVC Pipe, C-905 DR 18 (Gravity Sewer) 12' - 14' Depth	LF
103	16" PVC Pipe, C-905 DR 18 (Gravity Sewer) 14' - 16' Depth	LF
104	16" PVC Pipe, C-905 DR 18 (Gravity Sewer) 16' - 18' Depth	LF
105	18" DI Pipe, CL 350 (Gravity Sewer) 0' - 6' Depth	LF
106	18" DI Pipe, CL 350 (Gravity Sewer) 6' - 8' Depth	LF
107	18" DI Pipe, CL 350 (Gravity Sewer) 8' - 10' Depth	LF
108	18" DI Pipe, CL 350 (Gravity Sewer) 10' - 12' Depth	LF
109	18" DI Pipe, CL 350 (Gravity Sewer) 12' - 14' Depth	LF
110	18" DI Pipe, CL 350 (Gravity Sewer) 14' - 16' Depth	LF
111	18" DI Pipe, CL 350 (Gravity Sewer) 16' - 18' Depth	LF
112	18" PVC Pipe, C-905 DR 21 (Gravity Sewer) 0' - 6' Depth	LF

113	18" PVC Pipe, C-905 DR 21 (Gravity Sewer) 6' - 8' Depth	LF
114	18" PVC Pipe, C-905 DR 21 (Gravity Sewer) 8' - 10' Depth	LF
115	18" PVC Pipe, C-905 DR 21 (Gravity Sewer) 10' - 12' Depth	LF
116	18 PVC Pipe, C-905 DR 21 (Gravity Sewer) 12' - 14' Depth	LF
117	18" PVC Pipe, C-905 DR 21 (Gravity Sewer) 14' - 16' Depth	LF
118	18" PVC Pipe, C-905 DR 21 (Gravity Sewer) 16' - 18' Depth	LF
119	21" DI Pipe, CL 350 (Gravity Sewer) 0' - 6' Depth	LF
120	21" DI Pipe, CL 350 (Gravity Sewer) 6' - 8' Depth	LF
121	21" DI Pipe, CL 350 (Gravity Sewer) 8' - 10' Depth	LF
122	21" DI Pipe, CL 350 (Gravity Sewer) 10' - 12' Depth	LF
123	21" DI Pipe, CL 350 (Gravity Sewer) 12' - 14' Depth	LF
124	21" DI Pipe, CL 350 (Gravity Sewer) 14' - 16' Depth	LF
125	21" DI Pipe, CL 350 (Gravity Sewer) 16' - 18' Depth	LF
126	21" PVC Pipe, C-905 DR 21 (Gravity Sewer) 0' - 6' Depth	LF
127	21" PVC Pipe, C-905 DR 21 (Gravity Sewer) 6' - 8' Depth	LF
128	21" PVC Pipe, C-905 DR 21 (Gravity Sewer) 8' - 10' Depth	LF
129	21" PVC Pipe, C-905 DR 21 (Gravity Sewer) 10' - 12' Depth	LF
130	21" PVC Pipe, C-905 DR 21 (Gravity Sewer) 12' - 14' Depth	LF
131	21" PVC Pipe, C-905 DR 21 (Gravity Sewer) 14' - 16' Depth	LF
132	21" PVC Pipe, C-905 DR 21 (Gravity Sewer) 16' - 18' Depth	LF
133	24" DI Pipe, CL 350 (Gravity Sewer) 0' - 6' Depth	LF
134	24" DI Pipe, CL 350 (Gravity Sewer) 6' - 8' Depth	LF
135	24" DI Pipe, CL 350 (Gravity Sewer) 8' - 10' Depth	LF
136	24" DI Pipe, CL 350 (Gravity Sewer) 10' - 12' Depth	LF

137	24" DI Pipe, CL 350 (Gravity Sewer) 12' - 14' Depth	LF
138	24" DI Pipe, CL 350 (Gravity Sewer) 14' - 16' Depth	LF
139	24" DI Pipe, CL 350 (Gravity Sewer) 16' - 18' Depth	LF
140	24" PVC Pipe, C-905 DR 21 (Gravity Sewer) 0' - 6' Depth	LF
141	24" PVC Pipe, C-905 DR 21 (Gravity Sewer) 6' - 8' Depth	LF
142	24" PVC Pipe, C-905 DR 21 (Gravity Sewer) 8' - 10' Depth	LF
143	24" PVC Pipe, C-905 DR 21 (Gravity Sewer) 10' - 12' Depth	LF
144	24" PVC Pipe, C-905 DR 21 (Gravity Sewer) 12' - 14' Depth	LF
145	24" PVC Pipe, C-905 DR 21 (Gravity Sewer) 14' - 16' Depth	LF
146	24" PVC Pipe, C-905 DR 21 (Gravity Sewer) 16' - 18' Depth	LF

PAY ITEM NO. 147 – INSTALL PVC CLEANOUT

The work consists of furnishing all labor, equipment, and materials for installation of a new PVC riser pipe and cleanout at the ROW line (or other location as directed by the Engineer) on existing sewer lateral. The existing sewer lateral material may be PVC, Vitrified Clay, or DIP pipe. The unit price shall include all costs necessary to install riser pipe and cleanout including survey layout (based upon property monuments established by others), material, polyethylene wrap on ductile iron pipe, fittings, pipe cutting, wye unit on main, installation of riser pipe and cleanout, pavement cutting, trenching, dewatering for excavations up to 6-ft deep, sheeting for excavations up to 6-ft deep, bracing, utility crossings, barricades, clearing of the right-of-way, protection of property, backfilling, field layout, restoration, sodding, etc. The pay item shall include cleanout installation up to ten (10) feet in depth.

The quantities of pipe to be paid for under this item shall be each measured and inspected in place, completed, and accepted.

PAY ITEM NO. 148 – REPLACE PVC CLEAN OUT WITH MANHOLE STRUCTURE

The work consists of furnishing all labor, equipment, and materials for the replacement of an existing PVC clean out with a concrete manhole. The unit price shall include all costs necessary to replace clean out including survey layout (based on property monuments established by others), material, fittings, pipe cutting, concrete manhole installation, pavement cutting, trenching, dewatering for excavations up to 6-ft deep, bracing, utility crossings, barricades, clearing of the right-of-way, protection of property, backfilling, field layout, restoration, sodding, etc. The pay item shall include the removal of clean outs and installation of manholes up to four (4) feet in depth.

The quantities of manholes to be paid for under this item shall be each measured and inspected in place, completed, and accepted.

PAY ITEMS NO. 149 – 153 – REMOVE PIPE (GRAVITY SEWER)

The work consists of furnishing all labor and equipment to remove and dispose of out of service mains. Unless otherwise indicted by the Engineer or his representative, the pipe removed becomes the property of the Contractor. The unit price shall include all costs necessary to remove the pipe (including fittings, valves, reverse deadmen, etc.) including pavement cutting, trenching, replacement of base material, dewatering for excavations up to 6- ft deep, sheeting for excavations up to 6-ft deep, bracing, utility crossings, barricades, clearing of the right-of-way, protection of property, backfilling, restoration of pavement and grass, etc.

The quantities of pipe removal to be paid for under this Item shall be the length in linear feet (LF) of pipe measured along the centerline of the pipe through valves and fittings actually removed.

PAY ITEM	DESCRIPTION	UNITS
149	Remove Pipe 2” or 4” (Gravity Sewer)	LF
150	Remove Pipe 6” or 8” (Gravity Sewer)	LF
151	Remove Pipe 10” or 12” (Gravity Sewer)	LF
152	Remove Pipe 15”, 16”, or 18” (Gravity Sewer)	LF
153	Remove Pipe 21” or 24” (Gravity Sewer)	LF

PAY ITEMS NO. 154 – 167 – INSTALL OR ADJUST SERVICE LATERAL

The work consists of furnishing all labor, equipment, by-pass operations, customer coordination and materials for installation of a new or relocating a sanitary sewer service lateral found to be in conflict with proposed improvement or as directed by the Engineer. The unit price shall include all costs necessary to install up 30 linear feet of service pipe including survey layout (based upon property monuments established by others), material, polyethylene wrap on ductile iron pipe, fittings, pipe cutting, wye unit on main, installation of riser pipe and cleanout at the ROW line, pavement cutting, trenching, dewatering for excavations up to 6-ft deep, sheeting for excavations up to 6-ft deep, bracing, utility crossings, barricades, clearing of the right-of-way, protection of property, backfilling, field layout, etc. Service pipe lengths in excess of 30 feet will be paid for as Gravity Sewer Pipe (Pay Items 41-145). Restoration will be paid for under separate pay items.

The quantities of pipe to be paid for under this item shall be each measured and inspected in place, completed, and accepted.

PAY ITEM	DESCRIPTION	UNITS
154	4" Pipe - Install or Adjust Service Lateral 0'-6' Deep	EA
155	4" Pipe - Install or Adjust Service Lateral 6'-8' Deep	EA
156	4" Pipe - Install or Adjust Service Lateral 8'-10' Deep	EA
157	4" Pipe - Install or Adjust Service Lateral 10'-12' Deep	EA

158	4" Pipe - Install or Adjust Service Lateral 12'-14' Deep	EA
159	4" Pipe - Install or Adjust Service Lateral 14'-16' Deep	EA
160	4" Pipe - Install or Adjust Service Lateral 16'-18' Deep	EA
161	6" Pipe - Install or Adjust Service Lateral 0'-6' Deep	EA
162	6" Pipe - Install or Adjust Service Lateral 6'-8' Deep	EA
163	6" Pipe - Install or Adjust Service Lateral 8'-10' Deep	EA
164	6" Pipe - Install or Adjust Service Lateral 10'-12' Deep	EA
165	6" Pipe - Install or Adjust Service Lateral 12'-14' Deep	EA
166	6" Pipe - Install or Adjust Service Lateral 14'-16' Deep	EA
167	6" Pipe - Install or Adjust Service Lateral 16'-18' Deep	EA

PAY ITEMS NO. 168 – 177 – SEWER LINE MANHOLE CONNECTION

The work consists of all labor, equipment, investigative digging, and materials for repair of an existing connection into manhole wall or to install a new connection. All core drills shall be of sufficient diameter to accommodate pipe connection. Manhole connections may be either gravity sewer or sewer forcemain. All connections shall include a water stop or boot connection. Payment shall also include core drills, masonry or concrete patching, fiberglass and interior surface patching, shoring, dewatering for excavations up to 6-ft deep, backfill, refill, compaction operations, and compaction testing or re-testing. All sewer forcemain connections shall include installation of a drop bowl, paid for under Pay Items 177-186. The work does not include excavation or surface restoration which, if required, will be paid for, or is part of the work, under other Pay Items.

The quantities of connections into manholes to be paid under this item shall be each measured in place, completed, inspected, and accepted.

PAY ITEM	DESCRIPTION	UNITS
168	2" Sewer Line Manhole Connection	EA
169	4" Sewer Line Manhole Connection	EA
170	6" Sewer Line Manhole Connection	EA
171	8" Sewer Line Manhole Connection	EA
172	10" Sewer Line Manhole Connection	EA
173	12" Sewer Line Manhole Connection	EA
174	16" Sewer Line Manhole Connection	EA
175	18" Sewer Line Manhole Connection	EA
176	21” Sewer Line Manhole Connection	EA
177	24” Sewer Line Manhole Connection	EA

PAY ITEMS NO. 178 – 187 – INSIDE DROP CONNECTION

This item provides for all labor, equipment and material to install a PVC drop connection inside an existing manhole. This work includes all interior piping, drop bowl and any masonry or concrete

and coatings patching required to complete a repair connection or install a new drop connection to an existing manhole in accordance with Technical Specifications.

The quantity to be measured for payment under this Pay Item will be the actual number each (EA) of manhole inside drop connections completed and accepted.

PAY ITEM	DESCRIPTION	UNITS
178	2" Inside Drop Connection	EA
179	4" Inside Drop Connection	EA
180	6" Inside Drop Connection	EA
181	8" Inside Drop Connection	EA
182	10" Inside Drop Connection	EA
183	12" Inside Drop Connection	EA
184	15"/16" Inside Drop Connection	EA
185	18" Inside Drop Connection	EA
186	21" Inside Drop Connection	EA
187	24" Inside Drop Connection	EA

PAY ITEM NO. 188 – GROUTING OUT OF SERVICE PIPE (FORCE MAIN)

This item provides for all labor, equipment and material to install chemical grout or flowable fill into an existing pipe to be abandoned. Prior to grout filling the line, the Contractor shall verify that no live services remain connected to the line. The underground conduit (pipe, waterline, sewer line, storm drain line, etc.) be completely filled with a low strength cement grout (or flowable fill). In order to achieve this, the grout to be pumped into the line shall have a consistency that will permit forced flow into the entire length of line. Blocking the line by intermediate excavation and gravity flow concrete or grout is NOT acceptable. The existing line to be grout filled shall be exposed and plugged with concrete bulkheads or plugs at both ends. The grout shall be pumped through the pipe until the grout is visible at the other end of the underground conduit. No more than 15 psi shall be used to pump the grout mixture, and care should be used to avoid grout filling adjoining voids.

The quantities of pipe to be paid for under this Item shall be the volume in cubic yards of the inside pipe area times the length of pipe. No payment will be made for material that escapes the pipe or ends enclosures.

PAY ITEMS NO. 189 – 191 – DISCONNECT & PLUG PIPE

The work consists of furnishing all labor, equipment and materials to disconnect and cap/plug sewer mains that will remain in or out of service. The unit price shall include all nuts, bolts, gaskets, caps/plugs, restraint devices, thrust blocks, cutting existing pipe, removal of valve boxes, blow-off assemblies, scheduling and notification of service interruptions and all other operations required to disconnect and cap/plug the water mains.

The quantity of disconnect and cap/plug water mains to be paid for under this item shall be the

number each (EA) measured in place, completed and accepted.

PAY ITEM	DESCRIPTION	UNITS
189	Disconnect & Plug 2" or 4" Pipe	EA
190	Disconnect & Plug 6" or 8" Pipe	EA
191	Disconnect & Plug 10" or 12" Pipe	EA

PAY ITEMS NO. 192 – 202 – SANITARY SEWER FORCE MAIN

The work consists of furnishing all labor, equipment and materials and installing sanitary forcemain pipe by the open-cut method in accordance with the specifications.

The unit price shall include all costs necessary to install the pipe up to 6 feet in depth, including: survey layout (based upon property monuments established by others); protection of property; protection of existing utilities, mailboxes and service connections; erosion protection (silt fence, hay bales, floating turbidity barriers, or other means, as required); materials, pavement cutting, extra pipe fitting material including joints/jointing material/restraints; shoring, sheeting for excavations up to 6-ft deep; bracing; utility crossings; barricades; clearing; grubbing and stripping of the right-of-way; trenching, bedding and backfilling; pigging; flushing and cleaning; pressure testing. Fittings shall be included in the cost of 2” pipe. Dual tracer wire and tracer wire testing shall be included in the price for PVC pipe items. Polyethylene encasement shall be included in the bid price for DI pipe items. Restoration will be paid for under separate pay items.

Additional payment will be made for extra depth installation over six feet under a separate pay item. Well point dewatering is an authorized pay item only when the installation is below 6 feet in depth and site conditions warrant; all dewatering up to 6 feet in depth is included in this pay item.

The quantities of pipe to be paid for under this Item shall be the length in linear feet of pipe measured along the centerline of the pipe in place, completed, tested, and accepted.

PAY ITEM	DESCRIPTION	UNITS
192	2" PVC Restrained Joint Pipe & Fittings FM, SDR 21	LF
193	4" PVC Pipe, C-900 DR 18 (Force Main)	LF
194	4" PVC Restrained Joint Pipe & Fittings FM, C-900 DR 18	LF
195	6" PVC Pipe, C-900 DR 18 (Force Main)	LF
196	6" PVC Restrained Joint Pipe & Fittings FM, C-900 DR 18	LF
197	8" PVC Pipe, C-900 DR 18 (Force Main)	LF
198	8" PVC Restrained Joint Pipe & Fittings FM, C-900 DR 18	LF
199	10" PVC Pipe, C-900 DR 18 (Force Main)	LF
200	10" PVC Restrained Joint Pipe & Fittings FM, C-900 DR 18	LF

201	12" PVC Pipe, C-900 DR 18 (Force Main)	LF
202	12" PVC Restrained Joint Pipe & Fittings FM, C-900 DR 18	LF

PAY ITEMS NO. 203 – 208 – RESTRAINED JOINTS

The work specified in this item describes measurement and payment for furnishing all labor, equipment and materials and installing restrained joint hardware including mechanical joint restrainers, bell restrainers and PVC restrainers complete including bolts, gaskets, rods, special flanges, color coded polyethylene encasement , testing, acceptance, and ready for service. Restrained joints for pipe associated with fittings per the design of new pipe shall be paid for under separate pay item. This item shall only be used to restrain existing in-service pipelines or to install additional restraints above the amount specified, as directed by the Engineer or his representative.
`

The quantities of retrained joints to be paid for under this item shall be the number of each (EA) measured in place and accepted. No restrained joint hardware or any part of a restrained joint hardware shall be included for payment under more than one Item.

PAY ITEM	DESCRIPTION	UNITS
203	2" Restrained Joints	EA
204	4" Restrained Joints	EA
205	6" Restrained Joints	EA
206	8" Restrained Joints	EA
207	10" Restrained Joints	EA
208	12" Restrained Joints	EA

PAY ITEMS NO. 209 – 211 - FORCE MAIN OVER DEPTH EXCAVATION

The work consists of furnishing all labor and equipment to excavate additional depth greater than 6 feet depth for installation of sewer forcemain pipe by the open-cut method in accordance with the specifications. The unit price shall include all costs necessary to excavate additional depth over 6 feet including: survey layout (based upon property monuments established by others); protection of property, existing utilities, mailboxes and service connections; erosion protection (silt fence, hay bales, floating turbidity barriers, or other means, as required); materials; pavement cutting; bracing; utility crossings; barricades; clearing; grubbing and stripping of the right-of-way; trenching, bedding; and backfilling. Well point dewatering and sheeting are authorized pay items when the installation is below 6 feet in depth and site conditions warrant.

Measurement for payment for excavating each additional foot of depth to install pipe or appurtenances shall be made on a per linear foot (LF) basis for each additional vertical foot of depth over 6 feet as measured horizontally above the pipe centerline through valves and fittings.

PAY ITEM	DESCRIPTION	UNITS
209	2"-4" Forcemain Pipe and Appurtenances - Over Depth Excavation	LF

210	6"-8" Forcemain Pipe and Appurtenances - Over Depth Excavation	LF
211	10"-12" Forcemain Pipe and Appurtenances - Over Depth Excavation	LF

PAY ITEMS NO. 212 – 214 – REMOVE OUT OF SERVICE PIPE (FORCE MAIN)

The work consists of furnishing all labor and equipment to remove and dispose of out of service mains. Unless otherwise indicted by the Engineer or his representative, the pipe removed becomes the property of the Contractor. The unit price shall include all costs necessary to remove the pipe (including fittings, valves, reverse deadmen, etc) including pavement cutting, trenching, replacement of base material, dewatering for excavations up to 6-ft deep, sheeting for excavations up to 6-ft deep, bracing, utility crossings, barricades, clearing of the right-of-way, protection of property, backfilling, etc. Restoration will be paid for under separate pay items.

The quantities of pipe removal to be paid for under this Item shall be the length in linear feet (LF) of pipe measured along the centerline of the pipe through valves and fittings actually removed.

PAY ITEM	DESCRIPTION	UNITS
212	Remove Out of Service Pipe 2" or 4" (Force Main)	LF
213	Remove Out of Service Pipe 6" or 8" (Force Main)	LF
214	Remove Out of Service Pipe 10" or 12" (Force Main)	LF

PAY ITEMS NO. 215 – 220 – SLEEVED CONNECTION

The work consists of furnishing all labor, equipment and materials for installing sleeve connections not included in other items. The unit price shall include notification of shutdown to property owners, establishing alignment, moving and aligning old and new pipe, cleaning and cutting old pipe, sterilization, restraint jointing materials, color-coded polyethylene encasement, and all other operations required to make the connection. All connections shall include the cost of the sleeve or coupling, joint restraints and removal & disposal of up to twenty feet of existing main. Valves, pipe, additional joint restraints on existing main and fittings for connections shall be paid for under separate pay items.

The quantities of sleeve connection to be paid for under this item shall be the number each measured in place, completed, tested, and accepted

PAY ITEM	DESCRIPTION	UNITS
215	2" Sleeved Connection	EA
216	4" Sleeved Connection	EA
217	6" Sleeved Connection	EA
218	8" Sleeved Connection	EA
219	10" Sleeved Connection	EA
220	12" Sleeved Connection	EA

PAY ITEMS NO. 221 – 223 – REVERSE DEADMAN

The work covered by this item consists of reverse deadman installation for mains up to 12 inch in diameter. The installation shall include the corresponding size restrained joint as shown in the standard detail. This pay item includes: the furnishing of all materials and for the proper installation of the reverse deadman in strict accordance with the appropriate pipe specifications, excavation, erosion protection and control, backfill, dewatering for excavations up to 6-ft deep, sheeting for excavations up to 6-ft deep, shoring, surface grading, disposal of water, appropriate sized joint restraint, and concrete, all tools, equipment, labor, and materials necessary to install the reverse deadman as shown, specified or required for the proper completion of the work. Concrete shall cure for 72 hours or as determined by concrete mix design before applying force.

The quantities of reverse dead-man construction to be paid under this item shall be each measured in place, inspected, cured, and accepted.

PAY ITEM	DESCRIPTION	UNITS
221	Reverse Deadman for 2" or 4" Pipe	EA
222	Reverse Deadman for 6" or 8" Pipe	EA
223	Reverse Deadman for 10" or 12" Pipe	EA

PAY ITEM NO. 224 – DUCTILE IRON FITTINGS

The work consists of furnishing all labor, equipment and materials for installing ductile iron fittings not included in other items. All fittings shall include and be installed with joint restraints. The unit price includes furnishing and installing all fittings and materials above or below ground along the pipeline alignment; joints, joint restrainers, and jointing materials; bracing, shoring, and sheeting; dewatering, clearing, grubbing, and stripping; trenching, bedding and backfill; constructing the specified protection and adjusting of existing above ground and underground utilities and service connections; disposal of spoil; color coded polyethylene encasement; pressure testing; erosion protection and control, and all other related and necessary materials, work and equipment required to construct a complete, operable pipeline. The cost of furnishing and installing joint restraints shall be included in the unit price for Ductile Iron Fittings.

The quantities of ductile iron fittings to be paid for under this Item shall be the weight of the fitting required as established weight per fitting, including bolts, in tons (2,000 pounds) measured in place, completed, tested, and accepted. The weight of gaskets, jointing materials, etc., shall not be included in the computation of ductile iron fitting tonnage.

PAY ITEMS NO. 225 & 226 – 2” SS 316 AIR RELEASE VALVE ASSEMBLIES

The work consists of installing 2” SS 316 air release assemblies on sanitary sewer force mains. The unit bid price shall include installing the air release assembly, testing, excavation, backfill, bracing, shoring, sheeting for excavations up to 6-ft deep, dewatering for excavations up to 6-ft deep, surface grading, erosion protection and control, furnishing and installing tap saddle, tap, corporation stop, ball corporation, curb stop, automatic air release valve, enclosure, testing, miscellaneous brass nipples and fittings, and incidental items required to install a new assembly

as shown on the standard detail. All assemblies shall include tracer wire access, drainage gravel and miscellaneous nipples and fittings as shown in the standard details, filter fabric, valve identification tags, paint reference stripe on curb, painting of valve cover and meter boxes.

Measurement shall be on an individual basis for each (EA) assembly installed and accepted.

PAY ITEM	DESCRIPTION	UNITS
225	2" SS 316 Air Release Assembly (Underground)	EA
226	2" SS 316 Air Release Assembly (Aboveground)	EA

PAY ITEMS NO. 227 – 232 – RESILIENT WEDGE GATE VALVE

The work consists of furnishing all labor, equipment and materials for installing a valve not included in other items. The unit bid price includes furnishing and installing valves, valve boxes and covers, color coded polyethylene encasement, tracer wire access, filter fabric, valve identification tags, paint reference stripe on curb, painting of valve cover, concrete valve box pad, extension stems, joint restraints, pressure testing, excavation, backfill, dewatering for excavations up to 6-ft deep, sheeting for excavations up to 6-ft deep, shoring, surface grading and incidental construction associated with these items.

The quantities of valves to be paid for under this Item shall be the number each measured in place, completed, tested, and accepted.

PAY ITEM	DESCRIPTION	UNITS
227	2" RWGV (Resilient Wedge Gate Valve) & Box	EA
228	4" RWGV & Box C 515	EA
229	6" RWGV & Box C 515	EA
230	8" RWGV & Box C 515	EA
231	10" RWGV & Box C 515	EA
232	12" RWGV & Box C 515	EA

PAY ITEMS NO. 233 & 234 – ADJUST VALVE BOX TO FINISHED GRADE

The work consists of furnishing all labor, equipment, and materials for the vertical adjustment of an existing valve box and cover to match proposed finish grade. The unit price shall include placement of the valve cover to finish grade as shown on plans or directed by the Engineer.

the quantity of valve box and cover adjustments to be paid for under this item shall be the number each measured in place, on grade, inspected, and accepted.

PAY ITEM	DESCRIPTION	UNITS
233	Adjust Valve Box to Finished Grade (In Pavement)	EA
234	Adjust Valve Box to Finished Grade (Outside of Pavement)	EA

PAY ITEMS NO. 235 – 239 – LINE STOPS

The work consists of furnishing all labor, equipment and materials, including but not limited to dewatering for excavations up to 6-ft deep, excavation, sheeting for excavations up to 6-ft deep, shoring, preliminary measurements of the pipe prior to ordering the saddle, installing concrete cradle and support, line stop tapping sleeve, valve, and performing line stop installation with and for the duration of the new valve installation, pressure testing of tap saddle/sleeve, polyethylene wrap, and valve box for constructing a line stop on an existing sewer main and the adjustment of its valve box to finish grade. If a by-pass line stop installation is required, the by-pass piping will be paid for under line items for piping.

The quantities of Line Stops to be paid for under this Item shall be the number each measured in place, completed, tested, and accepted.

PAY ITEM	DESCRIPTION	UNITS
235	4" Line Stop	EA
236	6" Line Stop	EA
237	8" Line Stop	EA
238	10" Line Stop	EA
239	12" Line Stop	EA

PAY ITEMS NO. 240 – 259 – TAPPLING SLEEVE/SADDLE VALVE & BOX

The work consists of the installation of tapping saddle or sleeve and associated valves. The quantity to be paid for under this item is the number of connections acceptably installed. Cut in tee and valve may be required in some locations due to utility conflicts and will be paid for as equal sized tap. The unit bid price includes all materials and installation from the point of connection to the main line including scheduling and notification of service interruptions, furnishing and installing tapping saddle, color coded polyethylene encasement, valves, taps, fittings, piping, joint restraints, valve boxes and covers, concrete valve box pads, valve extension stems, tracer wire access, valve identification tags, filter fabric, paint reference stripe on curb, painting of valve box cover, excavation, erosion protection and control, backfill, dewatering for excavations up to 6-ft deep, sheeting for excavations up to 6-ft deep, shoring, surface grading, disposal of water, pressure testing and all other related, necessary, and incidental materials, work and equipment required to complete the connection. All joints shall be restrained.

The quantities of valves/taps to be paid for under this Item shall be the number each measured in place, completed, tested, and accepted.

PAY ITEM	DESCRIPTION	UNITS
240	4" x 2" Tapping Saddle Valve & Box	EA
241	4" x 4" Tapping Sleeve Valve & Box	EA
242	6" x 2" Tapping Saddle Valve & Box	EA
243	6" x 4" Tapping Sleeve Valve & Box	EA
244	6" x 6" Tapping Sleeve Valve & Box	EA

245	8" x 2" Tapping Saddle Valve & Box	EA
246	8" x 4" Tapping Sleeve Valve & Box	EA
247	8" x 6" Tapping Sleeve Valve & Box	EA
248	8" x 8" Tapping Sleeve Valve & Box	EA
249	10" x 2" Tapping Saddle Valve & Box	EA
250	10" x 4" Tapping Sleeve Valve & Box	EA
251	10" x 6" Tapping Sleeve Valve & Box	EA
252	10" x 8" Tapping Sleeve Valve & Box	EA
253	10" x 10" Tapping Sleeve Valve & Box	EA
254	12" x 2" Tapping Saddle Valve & Box	EA
255	12" x 4" Tapping Sleeve Valve & Box	EA
256	12" x 6" Tapping Sleeve Valve & Box	EA
257	12" x 8" Tapping Sleeve Valve & Box	EA
258	12" x 10" Tapping Sleeve Valve & Box	EA
259	12" x 12" Tapping Sleeve Valve & Box	EA

PAY ITEMS NO. 260 – 269 – MANHOLES

The work consists of furnishing all labor, equipment, by-pass operations, customer coordination and materials for constructing a sanitary sewer manhole at location shown on plans or as directed by the Engineer. The unit price shall include all costs necessary to construct the manhole including survey layout (based upon property monuments established by others), material, pavement cutting, trenching, replacement of base material, dewatering for excavations up to 6-ft deep, sheeting for excavations up to 6-ft deep, bracing, utility crossings, barricades, clearing of the right-of-way, protection of property, and backfilling. The depth of the manhole will be measured from the top of the cover down to the invert of the outlet sewer pipe. Excavation and well point dewatering for pipeline Manhole installations are separate pay items.

The quantities of manholes to be paid under this item shall be vertical feet of depth measured in place, completed, inspected, and accepted.

PAY ITEM	DESCRIPTION	UNITS
260	4' Dia. - Precast Manhole Standard	VF
261	4' Dia. - Precast Manhole Inside Drop	VF
262	4' Dia. - Precast Manhole Outside Drop	VF
263	5' Dia. - Precast Manhole Standard	VF
264	5' Dia. - Precast Manhole Inside Drop	VF
265	5' Dia. - Precast Manhole Outside Drop	VF
266	5' Dia. - Precast Air Release Manhole	VF
267	6' Dia. - Precast Manhole Standard	VF
268	6' Dia. - Precast Manhole Inside Drop	VF
269	6' Dia. - Precast Manhole Outside Drop	VF

PAY ITEM NO. 270 – REMOVAL OF EXISTING MANHOLE

This work item shall provide all labor, equipment and materials for the removal of existing manholes up to four feet in depth and plugging of existing lines with brick and mortar. The work does not include excavation, surface restoration, sheeting, MOT, or well point dewatering which, if required, will be paid for under other Pay Items.

The quantity to be measured for payment under this Pay Item will be the actual number of manhole removals completed and accepted up to four (4) feet in depth.

PAY ITEM NO. 271 – REMOVAL OF EXISITING MANHOLE ADDITIONAL

The work consists of all work contained in Pay Item Remove Existing Manholes and provides for manhole removal for depths greater than four (4') feet deep.

The quantity to be measured for payment under this Pay Item will be the actual length in vertical feet of additional manhole removal in the work less the four (4) feet paid for under other Pay Items

PAY ITEMS NO. 272 – 279 – INITIAL EXCAVATION

The work consists of furnishing all labor, equipment, materials, traffic control and supervision necessary for the excavation exposing up to 30 linear feet of existing sanitary sewer gravity or forcemain pipe as measured along the pipe in a horizontal plane. The unit price shall contain all costs necessary to expose the pipe, temporary sheeting/shoring/bracing up to 6-ft deep, dewatering, well point dewatering up to 6' deep, crushed stone, stabilization and protection of existing utilities, property protection, backfilling, compaction, and all other related and necessary materials required to expose the pipe to be repaired in accordance with the Contract Documents. There shall be one Initial Excavation per work site unless otherwise approved by the Engineer. The following items, if required or as determined by the Engineer, will be paid for under other Contract Pay Items: pipeline point repair, pipeline offset relocation, select backfill material, well point dewatering, by-pass pumping, surface restoration, sheeting for excavations greater than 6-ft deep, and pavement restoration.

The quantity to be paid for under this item shall be the actual number of each (EA) per job assignment for initial excavation made in conjunction with exploration or pipe repair at the various cut ranges listed. The cut for Initial Excavation shall be the average of the pipe cut (grade elevation minus the pipe invert elevation) measured at each end of the trench, which measures 30 feet in length or less in conjunction of pipeline point repair or relocation offset.

PAY ITEM	DESCRIPTION	UNITS
272	Initial Excavation - 0'-6' Deep	EA
273	Initial Excavation - 6'-8' Deep	EA
274	Initial Excavation - 8'-10' Deep	EA
275	Initial Excavation - 10'-12' Deep	EA
276	Initial Excavation - 12'-14' Deep	EA
277	Initial Excavation - 14'-16' Deep	EA
278	Initial Excavation - 16'-18' Deep	EA
279	Initial Excavation - 18'-20' Deep	EA

PAY ITEMS NO. 280 – 287 – ADDITIONAL EXCAVATION

The work consists of furnishing all labor, equipment, materials, traffic control and supervision necessary for the excavation to expose existing pipe as measured in the horizontal plane in excess of the original 30 linear feet included in Initial Excavation pay item. This Pay Item is applicable only in conjunction with, and includes the same work as listed in Pay Items 271-278.

Measurement of payment shall be the actual number of linear feet (LF) per job assignment for additional excavations made in conjunction with exploration of pipeline point repair or relocation offset.

PAY ITEM	DESCRIPTION	UNITS
280	Additional Excavation - 0'-6' Deep	LF
281	Additional Excavation - 6'-8' Deep	LF
282	Additional Excavation - 8'-10' Deep	LF
283	Additional Excavation - 10'-12' Deep	LF
284	Additional Excavation - 12'-14' Deep	LF
285	Additional Excavation - 14'-16' Deep	LF
286	Additional Excavation - 16'-18' Deep	LF
287	Additional Excavation - 18'-20' Deep	LF

PAY ITEMS NO. 288 – 295 – BYPASS PUMPING SETUP & OPERATION

This item provides for set up and operation of by-pass sewage pumping equipment and temporary piping as required and as described in the Standard Technical Specifications. This Pay Item is applicable on projects or repairs that have high flow or require an over night by pass operation.

The quantity to be measured for payment under this Pay Item will be the actual number of by-pass pumping set ups and operations, per part of day, required by the Engineer in the work. The minimum measurement for this pay item is eight (8) hours or 0.333 days and is measured from the time that the sewage is actually by-passed. This eight (8) hour minimum (0.333 days) includes full compensation for set up and operation for up to the first eight (8) hour period. Additional time will be in tenths of the day or twenty-four (24) hour period. The quantities determined shall be paid per day (DAY) or portion of day of by-pass pumping set up and operation.

PAY ITEM	DESCRIPTION	UNITS
288	Wastewater Bypass Pumping, Set up, 6" - 10" diameter	EA
289	Wastewater Bypass Pumping, Set up, 12" - 14" diameter	EA
290	Wastewater Bypass Pumping, Set up, 15" - 21" diameter	EA
291	Wastewater Bypass Pumping, Set up, 24" diameter	EA
292	Wastewater Bypass Pumping, Operation, 6" - 10" diameter	DAY

293	Wastewater Bypass Pumping, Operation, 12" - 14" diameter	DAY
294	Wastewater Bypass Pumping, Operation, 15" - 21" diameter	DAY
295	Wastewater Bypass Pumping, Operation, 24" diameter	DAY

PAY ITEMS NO. 296 – 311 – GRAVITY SEWER POINT REPAIR

This item provides all labor, equipment and materials for the replacement of up to twenty (20) linear feet of gravity sewer pipe with PVC or Ductile Iron pipe (Material as directed by the Engineer at each occurrence). The existing sewer pipe may be Vitrified Clay, PVC, Ductile Iron, Cast Iron, or Concrete gravity sewer main. The work includes repair sleeves, cutting existing pipe, pipe bedding, new replacement pipe, disposal of existing pipe, and reconnection of lateral connections to sewer main. This item also includes maintaining of flow in low flow systems that can be accomplished with up to a four (4) inch mud hog, diaphragm or centrifugal type pump and lay flat hose or temporarily blocking the sewer for a period of time to facilitate the repair. The cost of lengths of pipe greater than twenty (20) linear feet will be paid for under Pay Items 209-324. The work does not include sheeting or well point dewatering which, if required, will be paid for, or is part of the work, under other Pay Items.

The quantity to be paid under this item will be in accordance with each (EA) pipe size to be repaired as noted in the contract pay items.

PAY ITEM	DESCRIPTION	UNITS
296	6" Dia. Pipe Gravity Sewer Point Repair (DI Replacement Pipe)	EA
297	6" Dia. Pipe Gravity Sewer Point Repair (PVC Replacement Pipe)	EA
298	8" Dia. Pipe Gravity Sewer Point Repair (DI Replacement Pipe)	EA
299	8" Dia. Pipe Gravity Sewer Point Repair (PVC Replacement Pipe)	EA
300	10" Dia. Pipe Gravity Sewer Point Repair (DI Replacement Pipe)	EA
301	10" Dia. Pipe Gravity Sewer Point Repair (PVC Replacement Pipe)	EA
302	12" Dia. Pipe Gravity Sewer Point Repair (DI Replacement Pipe)	EA
303	12" Dia. Pipe Gravity Sewer Point Repair (PVC Replacement Pipe)	EA
304	15"/16" Dia. Pipe Gravity Sewer Point Repair (DI Replacement Pipe)	EA
305	15"/16" Dia. Pipe Gravity Sewer Point Repair (PVC Replacement Pipe)	EA
306	18" Dia. Pipe Gravity Sewer Point Repair (DI Replacement Pipe)	EA

307	18" Dia. Pipe Gravity Sewer Point Repair (PVC Replacement Pipe)	EA
308	21" Dia. Pipe Gravity Sewer Point Repair (DI Replacement Pipe)	EA
309	21" Dia. Pipe Gravity Sewer Point Repair (PVC Replacement Pipe)	EA
310	24" Dia. Pipe Gravity Sewer Point Repair (DI Replacement Pipe)	EA
311	24" Dia. Pipe Gravity Sewer Point Repair (PVC Replacement Pipe)	EA

PAY ITEMS NO. 312 – 327 – GRAVITY SEWER POINT REPAIR – ADDITIONAL LENGTH

This item provides all labor, equipment and materials for the additional length of replacement gravity sewer pipe with PVC or Ductile Iron pipe (Material as directed by the Engineer at each occurrence). This Pay Item provides for an additional thirty (30) feet of replacement pipe. This Pay Item is used only in conjunction with Pay Items 295-310 and contains the same work therein described. Pipe point repairs requiring greater than fifty (50) feet of pipe will be constructed under separate Contract Pay Items.

The quantity to be paid under this item will be in accordance with the linear feet (LF) installed above twenty (20) linear for each pipe size to be repaired as noted in the contract pay items.

PAY ITEM	DESCRIPTION	UNITS
312	6" Dia. Pipe Gravity Sewer Point Repair - Additional Length (DI Replacement Pipe)	LF
313	6" Dia. Pipe Gravity Sewer Point Repair - Additional Length (PVC Replacement Pipe)	LF
314	8" Dia. Pipe Gravity Sewer Point Repair - Additional Length (DI Replacement Pipe)	LF
315	8" Dia. Pipe Gravity Sewer Point Repair - Additional Length (PVC Replacement Pipe)	LF
316	10" Dia. Pipe Gravity Sewer Point Repair - Additional Length (DI Replacement Pipe)	LF
317	10" Dia. Pipe Gravity Sewer Point Repair - Additional Length (PVC Replacement Pipe)	LF
318	12" Dia. Pipe Gravity Sewer Point Repair - Additional Length (DI Replacement Pipe)	LF
319	12" Dia. Pipe Gravity Sewer Point Repair - Additional Length (PVC Replacement Pipe)	LF

320	15"/16" Dia. Pipe Gravity Sewer Point Repair - Additional Length (DI Replacement Pipe)	LF
321	15"/16" Dia. Pipe Gravity Sewer Point Repair - Additional Length (PVC Replacement Pipe)	LF
322	18" Dia. Pipe Gravity Sewer Point Repair - Additional Length (DI Replacement Pipe)	LF
323	18" Dia. Pipe Gravity Sewer Point Repair - Additional Length (PVC Replacement Pipe)	LF
324	21" Dia. Pipe Gravity Sewer Point Repair - Additional Length (DI Replacement Pipe)	LF
325	21" Dia. Pipe Gravity Sewer Point Repair - Additional Length (PVC Replacement Pipe)	LF
326	24" Dia. Pipe Gravity Sewer Point Repair - Additional Length (DI Replacement Pipe)	LF
327	24" Dia. Pipe Gravity Sewer Point Repair - Additional Length (PVC Replacement Pipe)	LF

PAY ITEMS NO. 328 – 333 – FORCE MAIN POINT REPAIR

This item provides all labor, equipment and materials for the replacement of up to ten (10) linear feet of pipe and may be used for routine response and emergency repairs at the discretion of the Engineer or his representative. The pipe being repaired may be PVC, HDPE, Ductile Iron, or Cast Iron. All ductile iron pipe shall have polyethylene encasement. The work includes furnishing and installing two full seal clamps, bell joint seal clamps or two solid sleeves, cutting existing pipe, pipe bedding, dewatering for excavations up to 6-ft deep, sheeting for excavations up to 6-ft deep, and disposal of existing pipe. Additional pipe materials over ten (10) linear feet in length will be paid for under Pay Items 191-201. Excavations and well point dewatering for pipeline point repairs are separate pay items.

The quantity to be paid under this item will be in accordance with each (EA) pipe size to be repaired as noted in the contract pay items.

PAY ITEM	DESCRIPTION	UNITS
328	2" Dia. Pipe Forcemain Point Repair	EA
329	4" Dia. Pipe Forcemain Point Repair	EA
330	6" Dia. Pipe Forcemain Point Repair	EA
331	8" Dia. Pipe Forcemain Point Repair	EA
332	10" Dia. Pipe Forcemain Point Repair	EA

333	12" Dia. Pipe Forcemain Point Repair	EA

PAY ITEMS NO. 334 & 335 – REPLACE MANHOLE RING AND COVER

This pay includes replacement of existing manhole rings and covers in roadway paved areas, or other areas, as directed by the Engineer. The work includes all labor, equipment and material for replacement of manhole rings and covers. The work does not include excavation or surface restoration which, if required, will be paid for, or is part of the work, under other Contract Pay Items.

The quantity to be measured for payment under this Pay Item will be the actual number each of manhole ring and covers replaced completed and accepted.

PAY ITEM	DESCRIPTION	UNITS
334	Replace Manhole Ring & Cover (Asphalt Pavement)	EA
335	Replace Manhole Ring & Cover (Unpaved)	EA

PAY ITEMS NO. 336 – 338 – MANOLE BENCH REPLACEMENT

This pay item includes the replacement of manhole benches and invert channels. The work includes all labor, equipment and material for rebuilding existing manhole inverts and benches as described in the Technical Specifications.

The quantity of manhole bench replacement to be measured for payment under this Pay Item will be the actual number each (EA) of manholes that have manhole inverts and benches rebuilt.

PAY ITEM	DESCRIPTION	UNITS
336	Manhole Bench Replacement, 4' Diameter	EA
337	Manhole Bench Replacement, 5' Diameter	EA
338	Manhole Bench Replacement, 6' Diameter	EA

PAY ITEMS NO. 339 & 340 – ADJUST MANHOLE RING AND COVER TO FINISHED GRADE

This item provides all labor, equipment and materials for adjusting existing manhole risers, frames, and covers. Adjustment includes removal of existing ring and cover and removal or placement of up to 6 courses of brick and reinstalling the existing ring and cover. The work does not include excavation, surface restoration, sheeting or well point dewatering which, if required, will be paid for, or is part of the work, under other Pay Items.

The quantities of manhole rim and cover adjustments to be paid under this item shall be each measured in place, on grade, inspected, and accepted.

PAY ITEM	DESCRIPTION	UNITS
339	Adjust Manhole Ring & Cover to Finished Grade (In Pavement)	EA

340	Adjust Manhole Ring & Cover to Finished Grade (Outside of Pavement)	EA

PAY ITEM NO. 341– FLOWABLE CONCRETE FILL

This item provides all labor, equipment, and materials for placing flowable fill per the Technical Specifications. The quantity of Flowable Concrete Fill to be paid under this item shall be per cubic yard measured in place, inspected, and accepted.

PAY ITEMS NO. 342 – 346 - PAVEMENT REPAIR AND ROAD RESTORATION

This item provides all labor, equipment, and materials for the installation of roadway base and surface course per the Technical Specifications and Contract Drawings. Replacement base material shall be the same as the existing base. Measurement will be based on the actual number of cubic yards of Roadway Base and tons of Superpave Asphalt base and concrete installed, tested, completed, and approved. The weight of the Superpave asphalt base and concrete shall be determined from batch weights, truck scale weights or other methods approved by the Engineer. Delivery tickets, in duplicate, signed by a sworn weigher, must accompany each load of material to the project site. One copy of the delivery ticket must be retained by the Contractor and one copy must be delivered to the City Inspector. The total number of tons reflected in one set of all delivery tickets collected by the Inspector must be the measured pay quantity.

PAY ITEM	DESCRIPTION	UNITS
342	Roadway Base, Lime Rock, Primed, Min. LBR 100, Variable Thickness	CY
343	Roadway Base, Crushed Concrete/Graded Aggregate, Min. LBR 100, Variable Thickness	CY
344	Superpave Asphalt Base, Type B 12.5, Variable Thickness	TN
345	Superpave Asphalt Concrete, Type SP 9.5, Fine, Traffic Level C, Variable Thickness	TN
346	Superpave Asphalt Concrete, Type SP 12.5, Fine, Traffic Level C, Variable Thickness	TN

PAY ITEMS NO. 347 - 349 – DRIVEWAY RESTORATION

Payment for all work included under this Pay Item will be made at the Contract unit price bid per square yard of driveway installed as shown in the Contract Drawings and as listed on the Bid Form. Measurement will be based on the actual number of square yards of driveway installed, tested, completed and approved. Payment shall represent full compensation for all labor, materials and equipment for cutting the edges of existing driveways, compacting subgrade, furnishing and installing the shell, asphaltic concrete, concrete, or decorative block and all incidentals necessary to complete the driveway restoration as shown on the Contract Drawings and included in the Specifications. No payment for restoration of a private driveway outside the right-of-way shall be made under this Pay Item.

PAY ITEM	DESCRIPTION	UNITS
347	Pavement, Cement Concrete, 6" Min Thickness (Driveways)	SY
348	Pavement, Cement Concrete, 8" Thick	SY
349	Driveway Restoration, In Kind, Decorative Block	SY

PAY ITEMS NO 350 - 352 – MILLING OF EXISTING ASPHALT

Payment for all work included under this Pay Item will be made at the Contract unit price bid per square yard of asphalt milling within the Contract Drawings and as listed on the Bid Form. Measurement will be based on the actual number of square yards of milling installed, tested, completed and approved. The measurement will be from face of curb to face of curb or as specified, but not greater than the width of the existing roadway prior to construction. Payment will include the milling of the asphaltic concrete in accordance with these Specifications. No payment for milling of a private driveway within or outside the right-of-way shall be made under this Pay Item.

PAY ITEM	DESCRIPTION	UNITS
350	Milling Existing Asphalt Pavement, 1/2" Average Depth	SY
351	Milling Existing Asphalt Pavement, 3/4" Average Depth	SY
352	Milling Existing Asphalt Pavement, 1" Average Depth	SY

PAY ITEMS NO. 353 – 356 – CURB AND GUTTER REPLACEMENT

Payment for all work included in this Pay Item will be made at the applicable Contract unit price bid per linear foot for removal of existing curbing and for furnishing and placing FDOT Type D or F curb and gutter, Miami curb, or Valley gutter as shown on the Contract Drawings and listed on the Bid Form. Measurement will be per actual number of linear feet of curbing installed. Payment shall represent full compensation for removal of existing curb and all labor, material and equipment for compacting subgrade, forming, furnishing, placing the concrete, and finishing as specified and all incidentals necessary for completion of this Pay Item, in accordance with FDOT specifications.

PAY ITEM	DESCRIPTION	UNITS
353	Curb & Gutter, Concrete, FDOT Type D	LF
354	Curb & Gutter Concrete, FDOT Type F	LF
355	Curb & Gutter, Concrete, Miami Curb	LF
356	Valley Gutter, Concrete, PCED Index 1315	LF

PAY ITEMS NO. 357 & 358 – CONCRETE SIDEWALKS

Payment for all work included under this Pay Item will be made at the Contract unit price bid per square foot of concrete sidewalk installed as shown in the Contract Drawings and as listed on the

Bid Form. Measurement of sidewalk restoration will be per the actual number of square feet of sidewalk replaced. Payment shall represent full compensation for all labor, materials and equipment for cutting the edges of existing concrete, compacting subgrade, furnishing and installing the concrete and all incidentals necessary to complete the sidewalk restoration as shown on the Contract Drawings in accordance with FDOT Specifications where applicable.

PAY ITEM	DESCRIPTION	UNITS
357	Sidewalk, Concrete, 4" Min. Thickness, Remove and Replace	SF
358	Sidewalk, Concrete, 6" Min. Thickness, Remove and Replace	SF

PAY ITEM NO. 359 – SODDING

Payment for all work included under this Pay Item will be made at the Contract unit price bid per square yard of sod installed as shown in the Contract Drawings and as listed on the Bid Form. Measurement of sodding will be per the actual number of square yards of sod installed. Payment shall represent full compensation for all labor, materials and equipment for furnishing and installing the sod and all incidentals necessary to complete the work as shown on the Contract Drawings in accordance with FDOT Specifications where applicable.

END OF SECTION

THIS PAGE INTENTIONALLY LEFT BLANK

SECTION 3 - SUBMITTALS

3.01 GENERAL

When used in the Contract Documents, the term "Shop Drawings" shall be considered to mean Contractor's plans for material and equipment which become an integral part of the Project. These drawings shall be complete and detailed. Shop Drawings shall consist of fabrication, drawings, setting drawings, schedule drawings, manufacturer's scale drawings and wiring and control diagrams. Cuts, catalogs, pamphlets, descriptive literature and performance and test data, shall be considered only as supportive to required Shop Drawings as defined above.

Data on materials and equipment shall include, without limitation, materials and equipment lists, catalog sheets, cuts, performance curves, diagrams, materials of construction and similar descriptive material. Materials and equipment lists shall give, for each item thereon, the name and location of the supplier or manufacturer, trade name, catalog reference, size, finish and all other pertinent data. Submittal distribution will be by electronic submittal as coordinated during the Preconstruction Conference.

3.02 CONTRACTOR RESPONSIBILITIES

The Contractor shall submit to the City and Engineer for review and acceptance: working drawings, shop drawings, test reports and data on materials and equipment, and material samples (hereinafter in this section called samples) as are required for the proper control of work, including, but not limited to those working drawings, shop drawings, data and samples for materials and equipment specified elsewhere in the Specifications and in the Contract Drawings.

Drawings and schedules shall be checked and coordinated with the work of all trades involved before they are submitted for review by the City and the Engineer and shall bear the Contractor's stamp of approval and original signature as evidence of such checking and coordination. Drawings or schedules submitted without this stamp of approval and original signature shall be returned to the Contractor for resubmission.

If drawings show variations from Contract requirements because of standard shop practice or for other reasons, the Contractor shall describe such variations in his letter of transmittal. If acceptable, proper adjustment in the contract shall be implemented where appropriate. If the Contractor fails to describe such variations, he shall not be relieved of the responsibility of executing the work in accordance with the Contract, even though such drawings have been reviewed.

For all mechanical and electrical equipment furnished, the Contractor shall provide a list including the equipment name and address and telephone number of the manufacturer's representative and service company so that service and/or spare parts can be readily obtained.

All manufacturers or equipment suppliers who proposed to furnish equipment or products shall submit an installation list to the City along with the required shop drawings. The installation list shall include at least five installations where identical equipment has been installed and have been in operation for a period of at least one (1) year.

No materials or equipment shall be ordered, fabricated or shipped or any work performed until the Engineer reviews and returns to the Contractor the submittals as acceptable according to the

submittal review codes in Section 3.04.

3.03 SUBMITTAL NUMBERING

When submitting shop drawings or samples, utilize a unique numbering system of the Contractors choice. Subsequent resubmittals of a revised submittal shall be denoted with a letter, A-Z, indicating the resubmission of the same drawing (i.e. A=2nd submission, B=3rd submission, C=4th submission, etc.).
An example of a submittal numbering would be as follows: Submittal No. 5A - HDPE Pipe 6.03

1. 5A is the second submission of the 5th shop drawing submitted for the project
2. HDPE Pipe is the subject of the submittal
3. 6.05 is the Specification Section for HDPE Pressure Pipe

3.04 SUBMITTAL REVIEW

Submittals shall be transmitted in sufficient time to allow the Engineer at least twenty (20) working days for review and processing. The review of shop drawings, data and samples will be for general conformance with the design concept and Contract Documents. An acceptance of a submittal shall be interpreted to mean that the Engineer has no specific objections to the submitted material, subject to conformance with the Contract Drawings and Specifications. This is not to be construed as permitting any departure from the Contract requirements, relieving the Contractor of responsibility for any errors, including details, dimensions, and materials, or approving departures from details furnished by the City, except as otherwise provided herein.

Submittals will be returned to the Contractor under one (1) of the following codes:

A. "NO EXCEPTIONS TAKEN" is assigned when there are no notations or comments on the submittal. When returned under this code the Contractor may release the equipment and/or material for manufacture.
B. "CORRECTIONS NOTED". This code is assigned when a confirmation of the notations and comments IS NOT required by the Contractor. The Contractor may release the equipment or material for manufacture; however, all notations and comments must be incorporated into the final product.
C. "REVISE AND RESUBMIT". This code is assigned when notations and comments are extensive enough to require a resubmittal of the package. The Contractor may release the equipment or material for manufacture; however, all notations and comments must be incorporated into the final product. This resubmittal is to address all comments, omissions and non-conforming items that were noted. Resubmittal is to be received by the Engineer within 15 Calendar Days of the date of the Engineer's transmittal requiring the resubmittal.
D. “REJECTED" is assigned when the submittal does not meet the intent of the Contract Documents. The Contractor must resubmit the entire package revised to bring the submittal into conformance. It may be necessary to resubmit using a different manufacturer/vendor to meet the Contract Documents.
E. “Filed as Received” is assigned when the submittal is for informational purposes only. No review or comments will be provided by the Engineer.

END OF SECTION

SECTION 4 – AS-BUILT DRAWINGS

4.01 MINIMUM AS-BUILT DRAWING STANDARDS FOR ALL AS-BUILT DRAWINGS

For all elements of construction, As-Built Drawings shall be submitted to at least the level of detail in the contract documents. It is anticipated that the original contract documents shall serve as at least a background for all record information. Original drawings in CAD format may be requested by the City.

Project data points shall contain both horizontal and vertical data relative to the FL Florida State Plane, West Zone, US Foot. Vertical datum is NAVD 1988. All elevations shall be in feet and tenths, referenced to NAVD 1988. Each sheet of the As-Built Drawings shall have the title “AS-BUILT DRAWING” printed in large bold lettering near the title block and a date corresponding to the date the as-built drawing was issued. As-Built Drawings notes, and information shall be bold or italics to identify them as As-Built information.

4.02 AS-BUILT DRAWINGS PREPARATION

The As-Built Drawings shall show the name, address, and phone number of the Contractor. Each drawing shall be certified by a responsible representative of the Contractor and dated. As-built information shall be recorded currently with construction progress and work shall not be concealed until required information is recorded. Properly prepared As-Built Drawings shall be certified by a Professional Engineer or Surveyor registered to the state of Florida, employed by the Contractor.

The As-Built Drawings shall at a minimum legibly include the following:

A. All underground piping with elevations and dimensions. Changes to piping location. Horizontal and vertical locations of underground utilities and appurtenances referenced to permanent surface improvements. Actual installed pipe material, size, class, etc.

B. Locations of drainage ditches, swales, water lines and force mains shall be shown every 200 feet (measured along the centerline). Dimensions at these locations shall indicate distance from centerline of right-of-way to the facility.

C. All horizontal locations, if not in the right-of-way, must relate to easement.

D. Field changes of dimension and detail.

E. Changes made by Field Order or by Change Order.

F. Details not on original Contract Drawings.

G. Equipment and piping relocations.

H. Locations of all valves, air release valves, fire hydrants, manholes, water and sewer services, water and force main fittings, underdrain cleanouts, catch basins, junction boxes

and any other structures located in the right-of-way or easement, shall be located by elevation and by station and offset based on intersection P.I.'s and centerline of right-of-way. For facilities located on private roads, the dimensioning shall be from centerline of paving or another readily visible baseline.

I. Elevations shall be provided for all manhole rim and inverts; junction box rim and inverts; catch basin rim and inverts; and baffle, weir and invert elevations in control structures. Elevations shall also be provided at the PVI's and at every other lot line or 200 feet, whichever is less, of drainage swales and ditches. Benchmarks and elevation datum shall be indicated.

J. Slopes for pipes and ditches shall be recalculated, based on actual field measured distances, elevations, pipe sizes, and type shown. Cross section of drainage ditches and swales shall be verified.

K. Centerline of roads shall be tied to right-of-way lines. Elevation of roadway centerline shall be given at PVI's and at all intersections.

L. As-Built Drawings shall show bearings and distances for all right-of-way and easement lines, and property corners.

M. Sidewalks, fences, and walls, if installed at the time of initial as-built drawing submittal, shall be located every 200 feet or alternate lot lines, whichever is closer. Dimensions shall include distance from the right-of-way line and the back of curb and lot line or easement line.

N. Allowable tolerance shall be ± 6.0 inches for horizontal dimensions. Vertical dimensions such as the difference in elevations between manhole inverts shall have an allowable tolerance of ± 1/8 inch per 50 feet (or part thereof) of horizontal distance up to a maximum tolerance of ± 2 inch.

Specifications and Addenda shall be legibly marked to record manufacturer, trade name, catalog number and supplier of each product and item of equipment actually installed and changes made by Field Order or by Change Order.

4.02.01 REQUIREMENTS FOR RECLAIMED WATER MAINS AND FORCE MAINS

In addition to that specified above, the following information shall be provided on the As-Built Drawings.

A. Location (vertical and any horizontal) at intervals not to exceed two hundred (200) feet and at all locations where the direction changes by more than ten (10) degrees.

B. Pipe size, material, and dimension ratio.

C. Location of air release valve.

D. Detailed location of valves (horizonal).

E. Elevations shall be provided on the top of operating nuts for all water and force main valves.

F. Reclaimed water service connection location based on distance from main line and property line for each designed meter.

G. Horizontal Directional Drilling (HDD) locations and elevations shall be shown on the As-Built Drawings. The beginning, ending, and surface locations shall be indicated as well as the horizontal and vertical location at least every 25 linear feet along the pipe as provided in the HDD Contractor's certified report and bore log.

All top of pipe elevations shall be accompanied by a finished grade elevation at the same location. Horizontal location of the pipe shall be defined using ties to back of curb and nearest property corner, property line or permanent control point.

4.02.02 REQUIREMENTS FOR GRAVITY SEWER

In addition to that specified above, the following information shall be provided on the As-Built Drawings.

A. Manhole rim and invert elevations (include pipe inverts).

B. Manhole horizontal location (i.e. dimension from right-of-way line or permanent control point.)

C. Service laterals located from the nearest downstream manhole. These dimensions shall be provided by on-site inspections or televising of the sewer following installation.

D. Distance between manholes.

Size and material of all pipe.

4.02.03 REQUIREMENTS FOR WASTEWATER PUMP/LIFT STATIONS

In addition to that specified above, the following information shall be provided on the As-Built Drawings.

A. Location ties back to back of curb and nearest property corner or permanent control point.

B. Wet well invert elevations.

C. Pipe invert elevations.

D. Valve vault inverts.

E. Top of slab elevations.

F. Pump make and model, horsepower, impellor size, design point.

G. Operating set point elevations

4.03 AS-BUILT DRAWINGS SUBMITTAL

Prior to substantial completion and prior to starting the bacteria testing of water lines, Contractor shall deliver electronic As-Built Documents and As-Built Drawings to the City and the Engineer for review. If there are any required changes or additions, these shall be completed and resubmitted for review. Signed and sealed As-Built Documents and As-Built Drawings shall be submitted prior to final pay application to the City and the Engineer, both electronically and in hard copy paper format. Up to six (6) copies shall be provided at the City's request.

The Contractor shall employ a Professional Engineer or Surveyor registered in the State of Florida to verify survey data and properly prepare As-Built Drawings. As-Built Drawings shall be certified by the professional(s) (Engineer or Surveyor licensed in Florida), as stipulated by the Land Development Ordinance and submitted in electronic format and up to six (6) hardcopies signed and sealed by a Florida registered surveyor and mapper.

AutoCAD drawings shall be in DWG or DXF form. All fonts, line types, shape files, external references, or other pertinent information used in the drawing and not normally included in AutoCAD shall be included on the media with a text file or attached noted as to its relevance and use.

Accompany submittal with transmittal letter, containing:

A. Date.
B. Project title.
C. Contractor's name and address.
D. Title and number of each As-Built Document.
E. Signature of Contractor or his authorized representative.

Note: The data required to properly prepare these As-Built Drawings shall be obtained at the site, at no cost to the City by the responsible design professional or his/her duly appointed representative. The appointed representative shall be a qualified employee of the responsible design professional or a qualified inspector retained by the responsible design professional on a project-by-project basis.

END OF SECTION

SECTION 5 - CONCRETE, MASONRY, AND REINFORCING STEEL

5.01 GENERAL

The Work in this section includes furnishing, placing, finishing, and curing all reinforced and plain concrete, prestressed concrete, reinforcing steel, welded wire fabric, brick, masonry block, mortar, and related work. Brick used for paving and hexagon block used for sidewalks are not included in this section.

5.02 PORTLAND CEMENT CONCRETE

Portland cement concrete shall conform to the applicable requirements of the FDOT-SSRBC Sections 346, 347, and 921.

Class IV concrete shall be used for all concrete in contact with, or over, salt or brackish water.

Concrete used for structures in contact with sewage shall be mixed from Type II Portland cement containing the lowest calcium thiosulfate available as specified in AASHTO M 85.

Concrete shall meet the following minimum 28-day compressive strength:

Miscellaneous concrete (thrust blocks, pipe encasement, etc.)	2,500 psi
Concrete curb/gutter/sidewalk/pavement	3,000 psi
Cast-in-place/precast structures	4,000 psi
Prestressed structures	5,000 psi

5.03 REINFORCING STEEL

Reinforcing steel shall conform to ASTM A 615, Grade 60 deformed bars and to the applicable requirements of FDOT-SSRBC Sections 415 and 931.

Reinforcing steel shall not be coated, except as specifically specified on the Contract Drawings.

All welded wire fabric shall conform to ASTM A 497 (deformed) or ASTM A 185 (plain) and to the applicable requirements of FDOT-SSRBC Article 415-6.

5.04 FIBROUS CONCRETE REINFORCEMENT

Fibrous concrete reinforcement may be used, where shown or approved, in lieu of welded wire fabric for shrinkage and thermal contraction/expansion in concrete pavement, driveway, and sidewalk.

Fibrous concrete reinforcement shall conform to ASTM C 1116, ASTM C 94, and ASTM E 119-83.

Fibrous concrete reinforcement shall be 100 percent virgin polypropylene fibrillated material mixed with concrete at a minimum of 1.5 pounds per cubic yard of concrete.

5.05 PLACEMENT OF REINFORCEMENT

Reinforcing steel placement shall conform to the applicable requirements of FDOT-SSRBC Articles 350-7 and 415-5.

The following minimum concrete cover shall be provided for all reinforcement:

Concrete cast against and permanently exposed to earth	3-inch
Concrete exposed to earth or weather	
Primary reinforcement	2-inch
Stirrups, ties, and spirals	1 1/2-inch
Concrete deck slabs, top and bottom	2-inch
Concrete not exposed to earth or weather	
Primary reinforcement	1 1/2-inch
Stirrups, ties, and spirals	1-inch

For bundled bars, the minimum concrete cover shall be equal to the equivalent diameter of the bundle, but need not be greater than 2-inch, except against and permanently exposed to earth, in which case the minimum cover shall be 3-inch.

Minimum concrete cover shall be increased in corrosive environment areas.

5.06 PLACEMENT OF CONCRETE

Placement of Portland cement concrete shall conform to the applicable requirements of FDOT-SSRBC Article 400-7.

Unless specific permission is granted prior to each occurrence, no concrete shall be delivered to the job site before 7:30 a.m. or after 4:30 p.m. No concrete shall be placed until the reinforcing steel placement has been inspected and approved by the Engineer.

5.07 CURING OF CONCRETE

Curing of Portland cement concrete shall conform to the applicable requirements of FDOT-SSRBC Article 520-8.

5.08 FINISHING OF CONCRETE

Finishing of Portland cement concrete shall conform to the applicable requirements of FDOT-SSRBC Article 400-15.

5.09 CONCRETE BRICK

Concrete brick for use in drainage structures and where shown on the Contract Drawings shall be approximately 3 5/8-inch by 7 5/8-inch by 2 1/4-inch in size and shall conform to ASTM C 55, Grade N-II or S-II.

5.10 CLAY BRICK

Brick shall be sound, hard, and uniformly burned regular and uniform in shape and size or compact texture and conforming to ASTM C 32, "Specification for Sewer and Manhole Brick (Made from Clay or Shale) Grade MS or MM."

5.11 MASONRY BLOCK

Load bearing units shall be hollow or solid, as shown on the Contract Drawings, and shall conform to ASTM C 90, Type I, 8-inch by 16-inch or 4-inch by 16-inch nominal face dimension.

Non-load bearing units shall conform to ASTM C 129, Type I, 8-inch by 16-inch or 4-inch by 16-inch nominal face dimension.

Horizontal continuous joint reinforcement shall be provided at every other joint. Reinforcement shall be a minimum of #9 gage steel, Grade 50. Wire shall be hot-dip galvanized, conforming to ASTM A 153, Class B-2 (1.5 ounce per square foot of wire surface) for zinc coating after prefabrication into units. Mortar coverage shall be not less than 5/8-inch on joint faces exposed to exterior, and not less than 1/2-inch elsewhere.

5.12 MORTAR

Mortar shall consist of a mixture of cementitious materials, aggregate, and water. All proportions shall be by volume and/or weight. Masonry cement shall conform to ASTM C 91 and C 270. Fine aggregate and Portland cement shall conform to the applicable requirements of FDOT-SSRBC Sections 902 and 921 respectively. Mortar shall have a minimum compressive strength of 1,500 psi.

5.13 GROUT

Grout shall be identical to mortar in all respects.

END OF SECTION

THIS PAGE INTENTIONALLY LEFT BLANK

SECTION 6 – EXCAVATION AND BACKFILL

6.01 GENERAL

The Work in this section includes furnishing all labor, materials, tools, and equipment for excavation and backfill of roadways, sidewalks, curbs, driveways, pipelines, and structures. The Work also includes removing and disposing of leftover material and furnishing and placing off-site fill.

Bidders shall examine the site of the Work, make their own additional soil borings and tests, and make their own determination of the character of materials and the conditions to be encountered on the Work; their Bid shall be based upon their own investigation.

6.02 TRENCH SAFETY

The Contractor shall be responsible for maintaining safety at each excavation. The Contractor shall adhere to the Florida Trench Safety Act (FS 90-96), OSHA trench excavation safety standards (29 CFR, Subpart P, 1926.650), and OSHA trench excavation shielding, sloping, or sheeting requirements. Inspections required by OSHA trench excavation safety standards shall be provided by the Contractor's "competent person," as defined by OSHA 29 CF, Subpart P, 1926. The Contractor's "competent person" shall be identified at the Preconstruction Conference.

The Contractor certifies by submitting the bid and subsequently executing this Contract, that all trench excavation done within his control shall be accomplished in strict adherence with OSHA trench safety standards, the Florida Trench Safety Act, and public safety.

The Contractor also agrees to produce or obtain, prior to award of the subcontracts, identical certification from subcontractors who will perform trench excavation, and to retain such certification for at least 3 years following Final Acceptance.

The Contractor shall consider all available geotechnical information when designing the trench excavation safety system. If sufficient geotechnical information is not available, the Contractor may obtain such to support the requirements set forth above, at no additional cost to the City.

6.03 WORK IN WETLANDS, MANGROVES, AND PRESERVATION AREAS

Strict adherence to all permits is required. Damage to wetlands, periodically wet areas, mangroves, and preservation areas is prohibited. Any such damage by the Contractor shall be duly rectified at no additional cost to the City and as approved by the regulatory agencies.

6.04 CLEARING AND GRUBBING

All clearing and grubbing Work shall conform to all applicable requirements of FDOT-SSRBC Section 110 "Clearing and Grubbing" except as modified herein.

The Contractor shall remove only those trees and bushes necessary to complete the specified Work. Not all the trees and bushes have been located or shown on the Contract Drawings. The Contractor shall flag those trees and bushes to be removed. All other trees and bushes shall be protected per Specifications.

All roots, stumps, and other debris shall be removed to a depth not less than 12 inches below a bearing surface. The disturbed surface shall be backfilled, graded, and compacted as specified.

No tree or bush shall be removed without the review and acceptance of the Engineer. The Contractor shall obtain all necessary City or County permits for each tree to be removed. Tree removal shall conform to the provisions of the Specifications.

6.05 ROADWAY EXCAVATION

The extent of excavation shall be as shown on the Contract Drawings or otherwise approved by the City and shall include roadway excavation and/or filling and grading, together with the removal of trees, bushes, existing asphalt, concrete, or other material, as required to facilitate construction and restoration as directed by the City.

All excavation Work shall conform to all applicable requirements of FDOT-SSRBC Section 120 “Excavation and Embankment” except as modified herein.

6.06 TRENCH EXCAVATION

Mechanical excavation shall be terminated at least 2 inches above the proposed pipe bed and trench bottom, then shaped and compacted so as to provide uniform bearing on the barrel of the pipe. Particular care shall be taken to recess the bottom of the trench at the bell of the pipe to relieve the bell of all load.

A minimum trench width shall be maintained, allowing room for the jointing and proper compaction of the backfill. If material is encountered that is unsuitable in the opinion of the Engineer, it shall be removed by the Contractor and replaced with acceptable material compacted in place as specified. In the event the Contractor excavates below the elevation required without approval, the Contractor shall backfill with approved materials compacted to obtain a suitable trench bottom, all to the satisfaction of the Engineer and at no additional cost to the City.

The amount of open trench shall be limited so that no more than 100 feet of open trench in advance of the backfilling operation will remain at the end of that working day. All open trench shall be protected by the Contractor with barriers, warning devices, and traffic control devices, which shall be kept in the correct position, properly directed, anchored when required, and clearly visible at all times. The barriers, warning devices, and traffic control devices shall be suitably lighted at all times when vehicular traffic lights are required.

6.07 STRUCTURE EXCAVATION

Excavation shall be of the size and depth required for construction of structures and their foundations. Unsuitable material encountered shall be removed to the depth required to obtain sound foundation material or as ordered by the Engineer. Over-excavated areas shall be filled with approved backfill material compacted as specified, at no additional cost to the City.

Unsuitable existing soil shall be removed and replaced with compacted material, as approved by the Engineer and as specified in the subsection herein headed "Excavation of Unsuitable Material."

6.08 EXCAVATION OF UNSUITABLE MATERIAL

Unsuitable material shall include rock, concrete, and boulders. Unsuitable soft material shall include logs, muck, other soft soils, organic soils, and other soils as specified or as ordered by the Engineer to be unsuitable.

All excavation of unsuitable material shall conform to all applicable requirements of FDOT-SSRBC Section 120 “Excavation and Embankment” except as modified herein.

Unsuitable material encountered below or within the roadway stabilized subgrade, the trench bottom, or a structure bottom, shall be removed by the Contractor to the limits established by the Engineer and disposed of from the Work area at an approved disposal area. Unsuitable material shall be replaced with approved material and compacted as specified.

No additional payment will be made for backfill material obtained from any source and used to replace any unsuitable material except as otherwise specified.

6.09 SHEETING, SHIELDING, AND SLOPING

All excavations shall be properly sheeted, shielded, or sloped to the required slope to furnish safe working conditions, to prevent shifting of material, to prevent damage to structures or other Work, and to avoid delay to the Work, all in accordance with applicable safety and health regulations. The minimum sheeting and shielding for trench excavations shall meet the general trenching requirements of the Florida Trench Safety Act and OSHA standards.

The sheeting and shielding shall be of adequate strength and quantity for the purpose intended. Any sheeting extending below the level of above the top of pipeline shall be cut off as ordered by the Engineer and left in place. In addition, the Engineer may order the Contractor to cut off and leave in place any sheeting, shielding, or other approved support where required to protect construction, property, or existing facilities or utilities.

Damages resulting in the installation or removal of sheet piling shall be rectified by the Contractor at no additional cost to the City.

6.10 DEWATERING

A. All pipeline and appurtenances shall be laid entirely in a dry trench. All foundations and structure walls shall be constructed or installed in a dry excavation.

B. Before commencing any excavation at the site of the Work, the Contractor shall submit to the Engineer for review, the methods, equipment, and arrangement of facilities proposed for dewatering and disposal of water at the site and of all water entering any excavation or other part of the Work from any source whatsoever.

C. Water discharged from dewatering equipment shall be carried into surface drainage facilities except water quality treatment systems and shall not be discharged into sanitary sewer lines. The Contractor shall prevent water from puddling in streets or on private properties. The depositing of dirt in storm drains and ditches and staining of existing facilities shall not be permitted.

D. Adequate standby facilities shall be provided to ensure that the excavation will be kept dry in the event of power failure or mechanical breakdown. Facilities for the removal and disposal of water shall be of sufficient capacity to keep the excavation dry under all circumstances with one-half of the facilities out of service. If well points are used, provision shall be made for removing and resetting individual well points without taking the system of which they are a part out of service.

E. The City reserves the right to require the Contractor to replace noisy equipment in order to keep disturbance to a minimum.

F. The cost of dewatering and disposal of water shall be included in the unit quantity for each appropriate item bid.

G. Refer to the Specifications for requirements concerning encountered groundwater contaminates.

6.11 BORROW MATERIAL

Any borrow excavation Work shall consist of the excavation and satisfactory utilization of material from areas provided by the Contractor when necessary material is not available from the normal excavation or grading operations. This Work shall conform to DOT-SSRBC Section 120 “Excavation and Embankment” except as modified herein.

If additional fill material is required, it shall be City approved material supplied and compacted by the Contractor. All compaction under roadway, alley, driveway, curb, walk, or other improved surface shall be to a density as specified in the Contract Documents. Unless otherwise directed by the City, all material not required for construction shall be removed from the premises and disposed of by the Contractor.

6.12 BEDDING MATERIAL

A. Where shown, ordered, or required, the Contractor shall place bedding material prior to placing pipelines, structures, or slabs. Bedding material may be either excavated approved native sand, concrete sand, gravel, or reclaimed concrete.

B. Off-site bedding material shall be sand or gravel. Sand bedding material shall be a clean concrete sand of uniform gradation between sieve sizes No. 4 and No. 50. All particles shall pass a 3/8-inch sieve and no particles shall pass a No. 100 sieve.

C. Gravel bedding material shall meet the requirements of ASTM C33 and shall be coarse aggregate, DOT Size No. 67 (3/4-inch to No. 4) or approved equal.

D. Reclaimed concrete bedding material shall be graded to meet the size requirements as specified for gravel bedding.

E. Bedding material, where required, shall be placed in lifts and compacted in a manner to achieve the specified density as specified and/or as shown.

F. If gravel bedding is used, an impermeable groundwater barrier shall be placed at 100-foot intervals in the gravel bedding. The impermeable groundwater barrier shall consist of a 10

mil sheet of polyethylene covering the full cross sectional area of the gravel, embedded 6 inches into the trench sides and bottom, and extending to the top of the gravel. The barrier shall be offset a minimum of 2 feet from any culvert or pipe joint. Ends and splice points shall be lapped a minimum of 12 inches.

6.13 STRUCTURAL SLAB BEDDING

Structural slabs for manhole bases, footings, and similar structures shall be placed on approved compacted bedding material and leveled as specified and/or as shown.

6.14 BACKFILL MATERIAL

Backfill material shall consist of earth, loam, sandy clay, sand, gravel, soft shale, or other materials, free from organic materials, large clods of earth, or stones. Backfill material shall be either soil classification A-1, A-2 or A-3, per AASHTO M-145, and shall be free of organic matter, lumps of clay or marl, muck, compressible materials, and rock exceeding 2.5 inches in diameter. Broken concrete, masonry, rubble or other similar materials shall not be used as backfill.

6.15 BACKFILL COMPACTION

All backfill shall be compacted as specified herein and shall meet the following minimum density as determined by the AASHTO T-180 method for backfill outside the right-of-way and in City streets, and by the AASHTO T-99 method if in County or FDOT right-of-way.

AASHTO T-180 Method C or D will be used for stabilized subgrade and base compaction tests, and Method A or B will be used for backfill testing, or as directed by the Engineer or jurisdiction.

	T-180	T-99
Roadway stabilized subgrade	98%	N/A*
Roadway base	98%	N/A*
Curb base	98%	N/A
Sidewalk and driveway base	98%	N/A
Pipe bedding	98%	100%
Pipe backfill - under pavement	98%	100%
Pipe backfill - under grass	95%	100%
Structure base slabs	100%	N/A
Structure backfill	98%	N/A

*Roadway stabilized subgrade and base material shall meet LBR requirements as specified in the Contract Documents.

6.16 BACKFILLING OF TRENCH

Backfilling shall be accomplished with suitable material and shall commence only after the pipelines have been laid and tentatively accepted by the City. The space between the pipe and the sides of the trench shall be packed full by hand-shoveled earth free from lumps or debris.

The backfill material shall be placed in 6-inch lifts and compacted, using approved tampers to the required compaction, to a point 12 inches over the top of the pipe. The remaining backfill (under areas other than roadways) shall be placed in uniform lifts not greater than 12 inches thick (or less as approved for mechanical equipment available) and tamped to the required compaction. Backfill under roadways shall be compacted in 6-inch lifts.

Where trenches are improperly backfilled, or where settlement occurs, the trenches shall be reopened to the depth required for proper compaction, refilled and compacted, and the surface restored to the grade and compaction, mounded over and smoothed off.

6.17 BACKFILLING STRUCTURES

Backfill around structures shall be of suitable job-excavated material, suitable off-site fill material, or other material approved by the Engineer. Such backfill shall extend from the bottom of the excavation or top of bedding to the bottom of pavement base course, the bottom of the subgrade for lawns or lawn replacement, the top of the existing ground surface, or to such other grades as may be shown or required.

The backfill shall be placed in uniform lifts not greater than 12 inches thick, and thoroughly compacted in place.

6.18 BACKFILLING UNDER ROADWAYS

Backfill placed under roadways and other paved surfaces shall be compacted in 6 -inch lifts and thoroughly compacted in place, with suitable equipment as specified herein.

6.19 DISPOSING OF LEFTOVER MATERIAL

The Contractor shall bring the surface to the same level as existed prior to the excavation. All leftover material shall be hauled from the site and disposed of by the Contractor. Leftover material shall not be stored in or along rights-of-way or easements.

6.20 ADJACENT FACILITIES

The Contractor shall be responsible for the protection, removal, and replacement of all adjacent structures, utilities, trees, shrubbery, curbs, culverts, headwalls, fences, signs, and other miscellaneous structures encountered during the course of the Work.

6.21 TEMPORARY SUPPORTS

Temporary supports for 16-inch and larger pressure and gravity pipes shall be designed by the Contractor and submitted to the City as required by Specifications. Temporary supports that include a structural beam, or other such member(s), shall be designed, signed and sealed by a Professional Engineer.

6.22 FLOWABLE FILL

Where shown on the Contract Drawings, or where ordered by the Engineer, the Contractor shall backfill a void area or an excavation with flowable fill. Flowable fill may be shown, or ordered, to fill

abandoned pipes, abandoned underground steel storage tanks, trench backfill, washout area under structural slabs or behind walls, or other similar locations.

Flowable fill shall be produced and delivered to the site. Placing of flowable fill shall be by chute, pumping, or other approved methods. Flowable fill shall be placed to the designated fill line without vibration. The Contractor shall take all necessary precautions to prevent any damage caused by hydraulic pressure of the fill during placement prior to hardening. Flowable fill shall not be used for pipe bedding and backfill in the zone from the bottom of a pipe to 12 inches above the top of pipe.

Flowable fill shall consist of materials conforming to FDOT-SSRBC Sections as follows:

Cement (Type I or II)	Section 921	"Portland Cement and Blended Cement"
Fly ash (Type F)	Section 929	"Fly Ash, Slag, Microsilica and Other Pozzolanic Materials for Portland Cement Concrete"
Fine aggregate (sand)	Section 902	"Fine Aggregate"
Water	Section 923	"Water for Concrete"

The Contractor shall submit a proposed design mix that will produce a flowable fill meeting the strength requirements specified herein, using the following materials:

	Pounds per cubic yard
Cement (Type I or II)	50 - 200
Fly ash (Type F)	0 - 2,000
Fine aggregate (sand)	2,500 - 3,000
Water	325 - 550
Note: 6-inch to 10-inch slump	

Flowable fill material shall be proportioned to produce a 28-day compressive strength approximately as follows:

	Pounds per square inch
Pipe trench backfill	50 - 150
Fill abandoned pipes or tanks	30 - 150
Under slabs, behind walls	300 - 1000
Note: Density in place 115 to 145 pounds per cubic foot.	

Not more than 60 minutes shall elapse between the start of moist mixing and the placement of the flowable fill.

Flowable fill placed on slopes shall have a reduced slump with a reduction in water and shall be able to be shaped as required.

The Contractor shall place the flowable fill in such a manner as to eliminate all cavities.

Flowable fill shall not be placed in salt water. When within a tidal area, the flowable fill shall be placed immediately after the salt water has receded.

When flowable fill is used adjacent to ductile iron pipe, the pipe shall be polyethylene encased.

END OF SECTION

SECTION 7 - SURFACE RESTORATION

7.01 GENERAL

The Work in this section includes restoring and maintaining pavements and pavement bases, curbing, sidewalks, driveways, and grass surfaces that are disturbed, damaged, or destroyed during the course of the Work under this Contract.

The quality of workmanship and materials used in the restoration shall produce a surface equal to or better than the condition before the Work began.

Prior to restoration, the Contractor shall saw cut and remove all existing pavement within 2 feet of the edge of the excavation, or within such widths as may be ordered by the Engineer.

Compaction of soil and base materials shall be tested using the AASHTO T 180 method.

Surface restoration workmanship and materials shall conform to the applicable sections of the FDOT-SSRBC.

All dirt areas disturbed shall be restored with sod, unless otherwise specified.

7.02 ROADWAY RESTORATION

Where the installation of pipe or structures occurs within an existing roadway, the limits of excavation shall be saw cut leaving a straight and square edge. The upper portion of the trench backfill shall be replaced with a compacted shell, crushed (reclaimed) concrete, or limerock base as shown on the Contract Drawings, and paved to match the surrounding surface. Replacement base material shall be the same as the existing base. Roadway restoration shall conform to the detail for shown in the Contract Drawings.

7.03 TEMPORARY PAVEMENT

Immediately upon completion of backfilling, the pavement surfaces damaged or destroyed shall be temporarily restored by placing a shell (FDOT-SSRBC Section 911), crushed (reclaimed) concrete (FDOT-SSRBC Section 204 applicable sections), or limerock (FDOT-SSRBC Section 911) base on the backfilled, compacted subgrade, and an adequate temporary asphaltic patch as shown or as approved by the Engineer. Shell crushed (reclaimed) concrete, or limerock shall be used as a base for all bituminous pavements.

Temporary work shall be maintained in a suitable and safe condition for traffic until the permanent pavement is laid or until final acceptance of the Work.

7.04 SHELL BASE

Shell base shall be constructed on the prepared subgrade to not less than 98 percent of maximum density, in accordance with the requirements of FDOT-SSRBC Section 911. The minimum compacted thickness of shell base shall conform to the detail shown on the Contract Drawings.

7.05 LIMEROCK BASE

Limerock base shall be constructed on the prepared subgrade to not less than 98 percent of maximum density, in accordance with the requirements of FDOT-SSRBC Section 911. The minimum compacted thickness of limerock base shall conform to the detail shown on the Contract Drawings.

7.06 CRUSHED (RECLAIMED) CONCRETE BASE

Crushed (reclaimed) concrete base shall be constructed on the prepared subgrade to not less than 98 percent of maximum density, in accordance with the requirements of FDOT-SSRBC Section 204. The minimum compacted thickness of crushed (reclaimed) concrete base shall conform to detail shown on the Contract Drawings.

The minimum limerock bearing ratio (LBR) value shall be 150.

7.07 ASPHALTIC CONCRETE PAVEMENT

A prime coat shall be applied to the prepared base in accordance with FDOT-SSRBC Section 300 prior to permanent asphaltic concrete pavement.

Unless specified elsewhere, all permanent asphaltic concrete pavement replacement shall be constructed in accordance with the requirements of FDOT-SSRBC Sections 320, 330, 334, and 337. Surface types and compacted thickness shall conform to the detail shown on the Contract Drawings.

7.08 BRICK PAVEMENT

Construction of brick pavement shall follow the details as shown on the Contract Drawings and City standard practice using City standard paving brick or red clay brick conforming to ASTM C 32, Grade SS with City standard dimensions.

Brick street abutting asphalt pavement shall have a minimum 6-inch-wide flush Type A Header Curb.

7.09 CURB AND GUTTER

All permanent restoration of street curb, or curb and gutter, shall be of the same type and thickness as the curb, or curb and gutter, which abuts. The grade of the restored curb, or curb and gutter, shall conform to the grade of the existing adjacent curb, or curb and gutter, so that positive drainage is maintained.

7.10 CONCRETE SIDEWALK

The restoration and construction of concrete sidewalks shall conform to applicable requirements of FDOT-SSRBC Section 522 and the Contract Drawings and shall be constructed where shown on the Contract Drawings and directed by the City. Sidewalk expansion joints with bituminous filler shall be installed at a maximum of 50-foot intervals on center and struck joints shall be spaced equidistant with walk width (joints wider than 6 feet shall be spaced as directed by the City). Where

new construction is to be tied into existing facilities, the old material is to be removed back to the nearest construction joint, or sawcut to a straight line as directed by the City or Engineer. The soil under sidewalks and driveways shall be compacted to 98 percent of the maximum density.

New sidewalks shall be 4 inches thick. Concrete pour for walk construction shall be made only on dampened subgrade. A soft broom finish shall be given the walk surface as directed by the Engineer.

Sidewalks crossing driveways shall be constructed according to the Specifications for concrete driveways.

Curb ramps for physically handicapped shall be constructed at all locations where sidewalks cross the curb or where directed by the Engineer. Those existing sidewalks which are removed to accomplish associated work as a part of this Project shall be replaced with a curb ramp when the sidewalk crosses the curb. The cost of curb ramps shall be included in the appropriate proposal item for sidewalk restoration.

Where sidewalks are replaced, the replacement shall be the full width of the walk and the minimum length shall be 60 inches. Restoration of adjacent lawn is incidental to sidewalk replacement and no separate payment will be made therefore.

7.11 HEXAGON BLOCK SIDEWALK

The restoration and construction of hexagon block sidewalks shall conform to the details shown on the Contract Drawings and City standard practice using City standard hexagon blocks.

The soil under sidewalks and driveways shall be compacted to 98 percent of the maximum density. New hexagon block sidewalks shall be 2 inches thick.

Curb ramps for physically handicapped shall be constructed at all locations where sidewalks cross the curb, or where directed by the City or Engineer. Those existing sidewalks which are removed to accomplish associated work as a part of this Project shall be replaced with a curb ramp when the sidewalk crosses the curb. The cost of curb ramps shall be included in the appropriate Pay Item for sidewalk restoration.

Where sidewalks are replaced, the replacement shall be the full width of the walk. Restoration of adjacent grass is incidental to sidewalk replacement and no separate payment will be made therefore.

7.12 DRIVEWAY AND PARKING LOT

Except as otherwise specified, all permanent restoration of base and surface of driveways, parking aprons, and sidewalks shall match the materials, thicknesses, elevations, lines, and grades of the existing construction, all to the Engineer's satisfaction. Patching of Portland cement driveway areas will not be allowed between joints or dummy joints.

For areas where streets are to be paved, or where more than 50 percent of the driveway apron is disturbed, concrete or brick driveways shall be replaced in kind. All other driveways, including shell

and dirt, shall be restored with an asphalt concrete surface from the street to the property line or front of sidewalk, as directed by the City or Engineer.

All base compaction under driveways shall be to a minimum density of 98 percent of the maximum density.

7.13 DRIVEWAY - ASPHALT

Residential asphalt driveway restoration shall include 1-inch thick asphaltic concrete surface over 2 inches of compacted sand-asphalt hot mix base, or 5 inches of compacted limerock or shell base.

Commercial asphalt driveway restoration shall be constructed of 1-inch thick asphaltic concrete surface over 8 inches of limerock base compacted in 2 lifts.

7.14 DRIVEWAY - CONCRETE

The restoration and construction of concrete driveways shall conform to applicable requirements of FDOT-SSRBC Section 522 and the Contract Drawings and shall be constructed where shown on the Contract Drawings and directed by the City or Engineer.

Residential concrete driveway restoration shall be 5 inches thick and shall include placing a single layer of 6-inch by 6-inch wire mesh (WWF 6 x 6 - W1.4 x W1.4).

Commercial concrete driveways shall be 6 inches thick with a double layer of 6-inch by 6-inch wire mesh (WWF 6 x 6 - W1.4 x W1.4).

7.15 DRIVEWAY - PEAGRAVEL

Where less than 50 percent of the driveway apron is disturbed, pea gravel driveways shall be restored to match the existing driveway. Pea gravel driveway restoration shall include asphalt treated shell base 5 inches thick after compaction to a minimum density of 98 percent of the maximum.

7.16 DRIVEWAY - SHELL

Where less than 50 percent of the driveway apron is disturbed, shell driveways shall be restored to match the existing driveway. Shell driveway restoration shall be 5 inches thick after compaction to a minimum density of 98 percent.

7.17 GRASS

7.17.01 Sodding

Sod shall be planted as soon as practical after paving, pipeline, or other work has been completed. Sodding shall always be used over seeding.

All work and materials shall meet the applicable requirements FDOT-SSRBC Section 570 (Sodding).

Sodding shall be done as directed by the Engineer, using only material which, in the opinion of the Engineer, is healthy and free of weeds, and (unless specified otherwise by the Engineer) of the same variety predominating at time of removal. Sod may be St. Augustine, Bahia, or other varieties as selected by the Engineer.

Sod shall be planted within 72 hours of being cut. Only moist, green sod having a virile root system may be planted. Sod shall be cut into adjacent sod to provide a smooth surface, and "top dressed" where necessary. Sod shall be rolled or tamped after planting to provide a uniform and consistent grade.

7.17.02 Grass Maintenance

The Contractor shall properly water and otherwise maintain all seeded and sodded areas for a minimum of 60 consecutive calendar days after completion of sodding operations. After the 60 days, and upon receipt of written request from the Contractor, the Engineer will inspect the areas for acceptance by the City. Any area that is washed or eroded, fails to show a uniform stand of healthy, vigorous grassing, or does not appear to be otherwise developing satisfactorily, shall be re-sodded and maintained until suitable for acceptance by the Engineer.

In the event that the stand of grass is found to be contaminated by weeds or other undesirable growth, the Contractor will be required to effectively eliminate such undesirable growth at his own expense.

7.18 EXPANSION JOINT MATERIAL

Expansion joint material for concrete pavement surfaces, including sidewalks and driveways, shall be the bituminous strip type, 1/2-inch thick, and shall conform to applicable requirements of FDOT-SSRBC Section 932.

END OF SECTION

THIS PAGE INTENTIONALLY LEFT BLANK

SECTION 8 – PAINTING

8.01 GENERAL

Painting materials not obtainable from the prime manufacturer shall be obtained from a second source recommended by the prime manufacturer for compatibility. All products furnished shall meet current Federal Regulations for lead, mercury and other heavy metals, as well as current VOC air quality regulations. Products of the following acceptable manufacturers may be used on this project, except where noted otherwise.

A. Ameron – Corrosion Control Division
B. Devoe & Raynolds Company
C. Indurall
D. KopCoat –RPM
E. MAB Paints
F. PPG Industries, Inc.
G. Rust-Oleum Corporation
H. Sherwin-Williams
I. Tnemec Company, Inc.

The Contractor shall paint or provide a protective coating for all interior and exterior wood and metal surfaces, all interior masonry, valves, and all submerged piping and other metal, whether specifically called for or not. In addition, all exposed piping shall be painted and further identified in accordance with other sections of these specifications. Because of their very nature, some areas or items do not require specific painting or coating for protection or appearance. The following generally do not require painting or coating unless specifically noted otherwise or required by manufacture, color coding, insulation from dissimilar metals, insulation from concrete or cement products, or architectural considerations:

A. Non-Ferrous Alloys:

Aluminum
Monel
Stainless Steel

B. Corrosion Resistant Metals:

Chromium Plated Steel
Weathering Steel
Galvanized Steel

C. Non-Metallic Materials:

Exterior Brick
Concrete
Glass

	Plastic &FRP
	PVC
	Porcelain
Pre-Finished Manufactured Items:	Cabinets
	Louvers
	Motor Control Centers
	Panels
	Signs and Nameplates
	Switchgear
	Switchboards
	Transformers
	Tile

D. Electrical Conduits Attached to Unpainted Surfaces.

E. Insulation and Insulation Jackets.

All exposed piping and conduit within the fence enclosure shall be color-coded in accordance with the following Color Coding Schedule:

A.	Electric	Gray
B.	Gas, Oil, Dangerous Materials	Red
C.	Telephone, Telegraph, Television, Communications	Safety Alert Orange
D.	Potable Water	Safety Blue
E.	Treated Sewage	Safety Green

Other paint colors will be selected by the Engineer

All materials shall be pure and first quality. Materials listed shall be the standard for each such type of material. Primers and finish coats shall be compatible and of the same manufacture where possible. Emulsion and alkyd paints shall contain a mildewcide, and both the paint and mildewcide shall conform to OSHA and Federal requirements, including Fed. Spec. TT-P-19. Paint and protective coating materials shall be sealed in containers that plainly show the designated name, formula or specification number, batch number, color, date of manufacture, manufacturer's directions, and name of manufacturer, all of which shall be plainly legible at the time of use. Pigmented paints shall be furnished in containers not larger than five (5) gallons. Materials shall conform to the specifications shown herein and to the requirements hereinafter specified.

To the maximum extent possible, all products shall be the product of one manufacturer unless a specific specialty coating system is specified. Without exception, all coatings for any service condition specified herein shall be by one manufacturer. Once a paint manufacturer has been selected by the Contractor and approved by the Engineer, the Contractor shall ensure that all

equipment manufacturers prime their equipment with the same or a compatible primer. If this cannot be or is not done for any reason, the Contractor shall apply a "universal primer" and recoat with the approved manufacturer's product in the field.

8.02 SUBMITTALS

Submittals shall be in accordance with the following:

A. Samples. Prepare and submit for Engineer's approval copies of color samples on 8-1/2" x 11" size cards for each paint and protective coating system. Each sample card shall clearly show each coat of the finish system, and shall be clearly marked with the manufacturer's name and product identification, and shall be submitted in sufficient time to allow for approval and, if necessary, disapproval and resubmittal without causing any delay of the project.

B. Coating Materials List.
   1. The Contractor shall provide copies of a paint and coating materials list which indicates the manufacturer and paint number, keyed to the coating schedule herein, for approval by the Engineer prior to or at the time of submittal of samples required herein.
   2. The Contractor shall include with his submittal, his protective coating schedule for shop and field coatings of items to receive protection. The schedule shall conform to the specified requirements for surface preparation, priming, and coating for items covered, and shall follow the same requirements for similar work where such work has not been specifically called-out. No bare ferrous nonworking surfaces shall be omitted from the schedule. Particular care shall be taken to cover in sufficient detail the coating of mechanical joints and other mechanical devices which shall conform to the recommended practice of the manufacturer of the joint or other mechanical devices.
   3. Coatings to be used on plastic and fiberglass materials shall be certified as acceptable by all plastic and fiberglass manufacturers whose products are to be coated. Certification copies shall be submitted to the Engineer. The Contractor shall be certified in writing by the painting and coating material manufacturers as qualified applicators of their products with copies of the certification submitted to the Engineer.

C. Product Data Sheets. Contractor shall submit paint and coatings material manufacturers' printed technical data sheets for products intended for use in each paint and coating system. Data sheets shall fully describe material as to its intended use, makeup, recommended surface preparation and application conditions, primers, material mixing and application (including recommended dry mil thickness recoat time), precautions, safety and maintenance cleaning directions.

D. Material Safety Data Sheets. Material Safety Data Sheets (MSDS) shall accompany all paint submittals and shall be prominently displayed at the job site during all painting activities.

8.03 PAINTING SCHEDULES AND SYSTEMS

Painting and coating of surfaces shall conform to the following schedules and systems, unless otherwise specified or shown on the drawings:

A. Schedule A: System 1 – Exposed exterior structural and miscellaneous steel, piping, equipment to include all stainless steel and carbon steel electrical control cabinets non-submerged, not exposed to corrosion, splash, fumes or immersion conditions.

1. Prime: One sprayed coat of a combination of a two-part epoxy primer, gray, of 3.0 mils, minimum dry film thickness as by Devoe Paints, Tru-Glaze Epoxy Primer Nos. 12735 and 12702 (ratio 19:1) or equal. If shop coat is damaged, re-prime bare areas in the field. The exterior of electrical cabinets, in stainless steel, shall be sand-blasted and spray-primed per the paint manufacturer's instructions.

2. Finish: Two coats of "hanging moss green" (Devoe Paints FX-70), Semi-Gloss Advanced Technology Acrylic Resin of 1.5 to 2.0 mils, dry thickness as Exterior Waterborne Semi-Gloss Enamel #83XX by Devoe Paints, or equal. Coats to be applied by spray painting in the shop.

B. Schedule B: System 2 – Piping and pumping equipment – submerged or non-submerged, exposed to spray, splash or corrosive atmosphere, excluding chains and sprockets, and stainless steel bracing in the wetwell:

1. Prime: One coat chemical resistant red iron oxide, based on a polyamide cured epoxy resin, minimum of 3.0-5.0 mils dry film thickness as by Devoe Paints, Devron 201. If shop coat is damaged, re-prime bare areas in the field.

2. Finish: Two coats of polyamide cured, epoxy resin coating, minimum of 4.0-6.0 mils dry film thickness per coat as by Devoe Paints, Devron 224HS-color, moss green as required above.

D. Schedule C; System 3 - Coating aluminum and non-ferrous metal surfaces, including undersides of aluminum access hatches, frames, and checkered plate, subject to corrosive atmosphere and condensation

1. Surface Preparation: Clean non-ferrous surfaces in accordance with 26 SSPC-SP7 (brush-off blast cleaning)
2. Prime: Minimum 3.0 mil DFT (Tnemec Primer – Series 66)
3. Finish: Minimum 4 mil DFT for a minimum total dry mil thickness of 7 mils (Tnemec Finish Coat – Series 66)

8.04 EXECUTION

All painting shall be done by skilled and experienced craftsmen and shall be of highest quality workmanship. Application of materials shall be done only on properly prepared surfaces as herein specified.

Before commencing work, the painter shall make certain that surfaces to be covered are in good condition. Should the painter find such surfaces not to be totally acceptable for covering, he shall report such fact to the Engineer. The application of paint shall be held as acceptance of the surfaces and working conditions and the painter will be held responsible for the results reasonably expected from the materials and processes specified.

Only compatible materials shall be used in the work. Particular attention shall be directed to compatibility of primers and finish coats. If necessary, subject to approval of the Engineer, a compatible barrier coat shall be applied between all existing prime coat and subsequent field coats to ensure compatibility. Ductile iron pipe that has an exterior bituminous coating shall not be painted unless the bituminous coating is removed by sand blasting or an appropriate, compatible, intermediate coat is applied before top coating in accordance with this specification

Hardware, hardware accessories, machined surfaces, nameplates giving manufacturer's data, cover plates, grease fittings, lighting fixtures and similar items in contact with painted surfaces and not to be painted shall be removed, masked, or otherwise protected prior to surface preparation and painting operations so they remain clean and free from paint.

Ferrous metals (not shop primed) shall be sandblasted per SSPC-SP6 to remove mill scale and rust. Ferrous surfaces to be submerged or exposed to spray, splash, fumes or corrosive atmosphere shall be sandblasted to near-white metal blast cleaning according to SSPC-SP 10. Brush blast or clean other metals as appropriate to provide suitable surface. Surface profile as obtained from sandblasting shall be recommended by the coating manufacturer. All metal surfaces shall be completely degreased by solvent cleaning in compliance with SSPC-SP 1.

Galvanized surfaces shall be cleaned of dirt, grease and other foreign substances and solvent cleaned. Surfaces shall be pro-treated with one coat of proprietary acid bound resinous or crystalline zinc phosphate preparation, used in accordance with the manufacturer's directions.

Remove glaze, of florescence, dirt, loose particles and grease (and existing paint, if applicable) from concrete receiving masonry paint. Fill all cracks, cut out defective joints and repaint.

In addition to the above listed surface preparations, all dirt, rust, scale, splinters, loose particles, disintegrated paint grease, oil and other deleterious substances shall be removed from all surfaces that are to be coated.

Work shall be done only under favorable weather conditions and as recommended by paint supplier. Exterior painting shall be done only in dry weather. Any surface coating damaged by moisture or rain shall be removed and redone as directed by the Engineer. Coatings shall be mixed, thinned, tinted and applied in accordance with the manufacturer's recommendations. The Contractor shall tint or match colors as selected by the Owner. A sample shall be applied on the job for review and approval before work is actually done. No thinners shall be used except those specifically mentioned and only in such quantity as directed by the manufacturer's instructions. If thinning is used, sufficient additional coat shall be applied to assure the required dry film thickness is achieved.

The manufacturer's recommended thinner or cleanup solvent shall be used for all cleanup. Application by brush, spray, airless spray or roller shall be as recommend by the manufacturer for

optimum performance and appearance. Paint shall be applied in a neat manner with finished surface free of runs, sags, ridges, laps and brush marks.

Each coat shall be applied in a manner that will produce an even film of uniform and proper thickness, and no variation in sheen or color. Where more than one coat of paint is specified, each coat shall be sufficiently tinted to result in a perceptible difference in shades of the various coats of paints so that the application of subsequent coats can be properly and uniformly spread and inspected. Provision shall be made to allow thorough drying between coats as recommended by the manufacturer before the next coat is applied, and paint used in successive field coats shall be produced by the same manufacturer.

Seal coats shall be used over bitumen-coated surfaces as applicable. Plastic pipe shall be painted in accordance with the pipe manufacturer's recommendations. Pipes, shoot metal ducts and other metal items which are to be installed in inaccessible locations shall be painted prior to installation.

Pumps, motors, machinery, equipment, electrical panels and other manufactured items shall have surfaces prepared, primed and coating in accordance with the recommendations of the manufacturer, and be given at least one touch-up coat with the intermediate coat material and one compete finish cost in the field.

The prime and intermediate coats for the various coating systems shall be as specified earlier and shall be compatible with the field coat or coats. Paint used in the first field coat over shop painted or previously painted surfaces shall cause no wrinkling, lifting or other damage to underlying paint.

All completed surfaces will be checked by the Engineer, and the Contractor shall provide the necessary properly calibrated gages. All non-ferrous surfaces shall be checked for number of coats and thickness by use of a Tooke gage. All ferrous surfaces shall be checked for film thickness by use of Elcometer or Micro-Test magnetic dry film gauge properly calibrated. . The Engineer shall have the right to reject all material for work that is unsatisfactory and require the replacement of either or both at the expense of the Contractor.

All paint brushed, splattered, spilled, or splashed on any surface not specified to be painted shall be removed. Upon completion of the painting work, the Owner shall be furnished one (1) gallon of each type and color of finish paint for touching up at no additional cost. Paint container labels, in addition to other required information, shall have location of color and type marked thereon.

Surfaces to be painted shall be inspected before any paint materials are applied, and after preparation has been completed.

Painted surfaces shall be inspected between coats, prior to application of next coat of painting material. Failure to get acceptance between coats will nullify credits for coats previously applied.

All paint shall be delivered to the job site in unopened original containers.

All paint not intended for the job shall be removed from the job site.

END OF SECTION

SECTION 9 - PIPING MATERIALS: DUCTILE IRON PIPE AND FITTINGS

9.01 GENERAL

The Work in this section includes furnishing all ductile iron pipe, fittings, joints, and appurtenant materials. All castings furnished shall have been cast in the United States of America unless complete certification is furnished in accordance with the latest edition of ANSI/AWWA C 110.

Standards referenced in this section are the latest revision of the following specifications:

ANSI/AWWA C104	"Cement Mortar Lining for Ductile-Iron Pipe and Fittings for Water"
ANSI/AWWA C110	"Ductile-Iron and Gray Iron Fittings, 3-Inch through 48-Inch, for Water and Other Liquids"
ANSI/AWWA C111	"Rubber-Gasket Joints for Ductile-Iron and Pressure Pipe and Fittings"
ANSI/AWWA C115	"Flanged Ductile-Iron Pipe with Threaded Flanges"
ANSI/AWWA C150	"Thickness Design of Ductile-Iron Pipe"
ANSI/AWWA C151	"Ductile-Iron Pipe, Centrifugally Cast, for Water or Other Liquids"
ANSI/AWWA C153	"Ductile-Iron Compact Fittings, 3-Inch through 24-Inch, for Water and Other Liquids"
ASTM D 1248	"Polyethylene Plastics Molding and Extrusion Materials"

9.02 PIPE

9.02.01 GENERAL

All ductile iron pipe shall be designed in accordance with ANSI/AWWA C150. Pipe shall be minimum pressure class as follows:

Size	Pressure Class
3-inch through 18-inch	350
20-inch through 24-inch	300
30-inch through 48-inch	200

For threaded flanged pipe the minimum thickness shall be the nominal thickness as shown on Table 15.1 of ANSI/AWWA C115.

Thickness shall be designed for a flat-bottom trench backfill lightly consolidated to centerline of pipe. Pipe shall be manufactured in accordance with ANSI/AWWA C151.

The pressure rating, metal thickness class, net weight of pipe (without lining) length of pipe, name of manufacturer, "DI" or "DUCTILE," and country where cast, shall be clearly marked on each length of pipe.

The Contractor shall take extreme care when handling pipe and fittings to ensure the interior lining does not get damaged during construction. Lined pipe and fittings must be handled only from the outside of the pipe and fittings. No forks, chains, straps, hooks, etc. shall be placed inside the pipe and fittings for lifting, positioning, or laying. The pipe shall not be dropped or unloaded by rolling.

Care should be taken not to let the pipe strike sharp objects while swinging or being off loaded. Ductile iron pipe should never be placed on grade by use of hydraulic pressure from an excavator bucket or by banging with heavy hammers.

9.02.02 LINING

A. **Potable Water Lines and Reclaimed Water Lines**: Ductile iron pipe and fittings for use in potable and reclaimed water lines shall be cement mortar lined. Cement lining shall conform to ANSI/AWWA C104, and seal coated with approved bituminous seal coat in accordance with ANSI/AWWA C151. Seal coating shall be UL listed or NSF approved for use in potable water mains.

B. **Sanitary Force Mains and Gravity Sanitary Pipe**: Ductile iron pipe and fittings for sanitary sewer force mains and gravity sewer pipe shall be polyethylene, polyurethane, or epoxy lined.

   Epoxy lining shall be 40 mil minimum thickness (multi-pass process) and shall be Protecto 401 Ceramic Epoxy, as manufactured by the Protecto Division of Vulcan Painters, Inc., or approved equal.

   Polyethylene lining shall be factory furnished with a fusion bonded polyethylene liner of 60 mil minimum thickness conforming to ASTM D1248, such as Polybond Plus as furnished by American Cast Iron Pipe Co. or approved equal.

   Polyurethane lining shall be factory applied conforming to Corropipe, as manufactured by Madison Chemical Industries, Inc., or an approved equal. Material shall be applied in conformance with the manufacturer's recommendation and shall be a 40-mil final dry film thickness.

   For any lining method, to ensure a holiday-free lining, documentation must be provided, prior to shipment, showing each section of lined pipe has passed holiday testing at the time of production per ASTM G62. The lining shall have a minimum three (3) year warranty covering failure of the lining and bond failure between liner and pipe.

C. **Storm Drain Gravity Pipe**: Ductile iron pipe and fittings for storm drain gravity pipe shall be epoxy lined as per sanitary pipe or cement mortar lined as per water pipe, at the Contractor's option.

9.03 FITTINGS

Ductile iron fittings shall conform to ANSI/AWWA C110 or ANSI/AWWA C153.

Fittings shall be suitable for a minimum water pressure plus water hammer as follows:

Size	Type	Pressure Rating
3-inch through 12-inch	DI	350
14-inch through 24-inch	DI	350
30-inch through 48-inch	DI	250

Fittings shall be coated outside with petroleum asphaltic coating, 1 mil minimum thickness.

Fittings shall be lined as specified herein headed "4.02 Pipe."

Anchor couplings equal to McWayne Clow F-1211 for fire hydrant assemblies may be substituted with an anchoring tee equal to Catalog No. A-10180 locked hydrant tee as manufactured by American Ductile Iron Pipe Co. or hydrant tee with rotatable MJ gland as manufactured by U.S. Pipe Co. in place of the MJ tee and anchor coupling as shown, at the Contractor's option.

9.04 JOINTS - BURIED PIPE AND FITTINGS

Joints for ductile iron pipe and fittings shall conform to ANSI/AWWA C111, except as otherwise specified. All pipe and fittings shall be furnished complete with joint accessories necessary for installation conforming to ANSI/AWWA C111. No additional payment will be made for joint accessories, including retainer glands, unless otherwise specified.

When deflection is required the joint shall be completed prior to setting the deflection. The deflection shall conform to applicable AWWA Standards or manufacturer's recommendation with prior Engineer's approval.

The Contractor shall furnish and install all necessary materials, equipment, and appurtenances required to complete the work.

A. **Unrestrained Joints**: Joints for unrestrained pipe shall be push-on joint. Joints for fittings, when installed with unrestrained pipe, shall be mechanical joint with DI retainer glands, as specified herein for restrained joints.

B. **Restrained Joints**: All joints in restrained pipe systems shall be of the same type (pipe and fittings), except valves shall be mechanical joint with DI retainer glands as specified.

1. **12-inch and Smaller**: Joints for restrained pipe and fittings, 12-inch and smaller, shall be one of the following:

a. Push-on restrained joint utilizing a retainer ring, equal to U.S. Pipe TR Flex. It shall be UL listed, FM approved, or shall be certified by an approved laboratory that the restrained joint will not separate at the specified test pressure.

b. Push-on restrained joint using a locking type gasket, equal to Field-Lok, as manufactured by U.S. Pipe and Foundry, Inc. It shall be UL listed, FM approved, or shall be certified by an approved laboratory that the restrained joint will not separate at the specified test pressure.

c. Mechanical joint with DI retainer glands shall be furnished with retainer glands equal to Series 1100 Megalug, as manufactured by EBAA Iron Inc., Stargrip 3000 as manufactured by Star Pipe Products, or DI MJ Gripper Gland as manufactured by U.S. Pipe and Foundry Co. for use with ductile iron pipe. All retainer glands shall be UL listed, FM approved, or shall be certified for 350 psi pressure rating with a 2:1 safety factor.

2. **Larger than 12-inch**: Joints for restrained pipe and fittings larger than 12-inch shall be as follows:

   a. Restrained pipe joints shall be modified push-on restrained joint, equal to U.S. Pipe TR Flex, and shall be UL listed or FM approved.

   b. Fittings joints shall be equal to U.S. Pipe TR Flex or shall be mechanical joint with DI retainer glands. Retainer glands shall be equal to Series 1100 Megalug or Stargrip 3000 for 16-inch and larger pipe. All retainer glands shall be UL listed, FM approved, or certified for 350 psi pressure rating (for 16-inch) and 250 psi pressure rating (for larger than 16-inch) with a 2:1 safety factor.

   c. Valve joints shall be mechanical joint with DI retainer glands as specified herein for larger than 12-inch fittings joints.

9.05 JOINTS - EXPOSED PIPE AND FITTINGS

Joints for exposed ductile iron pipe and fittings shall be restrained, except as otherwise noted on the Contract Drawings. Joints for exposed pipe in plants and in vaults shall be flanged where noted on the Contract Drawings.

Joints for exposed pipe and fittings 12-inch and smaller shall be modified push-on restrained joint using a retainer ring, or modified push-on joint using a locking type gasket, as specified herein headed "4.04 Joints - Buried Pipe and Fittings."

Joints for exposed pipe and fittings larger than 12-inch shall be modified push-on restrained joint using a retainer ring as specified herein headed "4.04 Joints - Buried Pipe and Fittings."

9.06 DETECTION

Pipe shall have 3-inch detectable metallic tape of the proper color placed directly above the pipe and 12-inch below finished grade or 6-inch detectable tape between 12-inch and 24-inch below finished grade.

Pipe shall also have tracer wire installed along the pipe alignment. The tracer wire to be used shall be a solid, 10-gauge, high strength, copper clad steel wire with a polyethylene jacket of appropriate color manufactured by Copperhead Industries or approved equal.

9.07 ZINC/EPOXY/FLUOROPOLYMER PROTECTIVE COATING

Joints and Pipe exposed to extreme coastal environments including, but not limited to, aerial ocean crossings shall have this system or an approved equal applied as a protective coating.

Surface Preparation: SSPC-SP6/NACE No.3 Commercial Blast Cleaning with a minimum 1.5 mil angular anchor profile.

Tnemec	Coating Thickness
Primer: Series 90-97 Tneme-Zinc	2.5 - 3.5 mils
2nd Coat: Series 66HS Hi-Build Epoxoline	3.0 - 6.0 mils

3rd Coat: Series 700 Hydroflon 2.0 - 3.0 mils

Total Dry Film Thickness: 7.5 - 12.5 mils

Minimum Dry Film Thickness: 9.5 mils

END OF SECTION

THIS PAGE INTENTIONALLY LEFT BLANK

SECTION 10 - PIPING MATERIALS: PVC PRESSURE PIPE

10.01 GENERAL

The Work in this section includes furnishing all Polyvinyl Chloride (PVC) pressure pipe and fittings. PVC pressure pipe includes all PVC pressure pipe 2-inch through 36-inch.

Standards referenced in this Section are the latest revision of the following specifications:

ANSI/AWWA C900-16	"Polyvinyl Chloride (PVC) Pressure Pipe and Fabricated Fittings, 4 In. Through 60 In."
ANSI/AWWA C110	"Ductile-Iron and Gray-Iron Fittings, 3-Inch through 48-Inch for Water"
ANSI/AWWA C111	"Rubber-Gasket Joints for Ductile-Iron Pressure Pipe and Fittings"
ANSI/AWWA C153	"Ductile-Iron and Gray-Iron Fittings, 3-Inch through 48-Inch for Water"
ASTM D 1784	"Standard Specification for Rigid Poly (Vinyl Chloride) (PVC) Compounds and Chlorinated Poly (Vinyl Chloride) (CPVC) Compounds"
ASTM D 1785	"Standard Specification for Poly (Vinyl Chloride) (PVC) Plastic Pipe, Schedules 40, 80, and 120
ASTM D 2241	"Standard Specification for Poly (Vinyl Chloride) (PVC) Pressure-Rated Pipe (SDR Series)"
ASTM D 3139	"Standard Specification for Joints for Plastic Pressure Pipes Using Flexible Elastomeric Seals"

10.02 PIPE

A. **Two-inch Pipes**: All 2-inch PVC pipe shall meet ASTM D 1784 specification for rigid PVC compounds and ASTM D 2241 specification for PVC plastic pipe. PVC pipe shall be suitable for use at maximum hydrostatic working pressure of 160 psi at 73°F. Pipe shall have a standard dimension ratio (SDR) 26 and bear the NSF Seal for potable water pipe.

B. **4-inch Through 36-inch Pipes**: PVC pressure pipe 4-inch through 36-inch shall meet the requirements of ANSI/AWWA C900-16, with outside diameter dimensions of ductile iron pipe. All 4-inch through 36-inch PVC pressure pipe shall be Class 235 and DR18.

C. **UV Resistant PVC Pipe**: All PVC piping exposed to sunlight shall contain titanium dioxide for UV resistance, and shall conform to ASTM D 1784 and ASTM D 1785 (IPS). The Contractor shall submit the manufacturer's certificate of conformance to the City. Pipe shall be marked with manufacturer's identification.

10.03 FITTINGS

A. **Two-inch Pipes**: Gasketed joint standard dimension ratio (SDR) 21 PVC or galvanized steel fittings shall be used with all 2-inch PVC pipe. PVC adapters, Harco as manufactured by the Harrinton Corporation or approved equal, shall be used for jointing to 2-inch gate valves, galvanized fittings, and existing threaded pipe.

B. **Four-inch Through 36-inch Pipes**

1. **Molded PVC Pressure Fittings**: Fittings for 4-inch through 8-inch sanitary sewer pressure pipe shall be molded PVC pressure fittings, unless DI fittings are directed by the Engineer. Molded PVC fittings shall meet the requirements of ANSI/AWWA C900-16 and shall be Harco Class 150 as manufactured by the Harrington Corporation, or approved equal, as directed by the Engineer.

2. **DI Fittings**: Fittings for pipe larger than 8-inch shall be DI, mechanical joint. DI fittings for 4-inch through 36-inch PVC pressure pipe shall conform to ANSI/AWWA C110 or C153 and shall conform to the Technical Specifications section headed "Piping Materials: Ductile Iron Pipe and Fittings."

C. Where flanged fittings are shown, specified, or directed by the Engineer, adapter flanges shall be used on plain end PVC pipe. Adapter flanges shall be suitable for PVC pipe and be equal to Uni-Flange Series 900 as manufactured by Ford/Uni-Flange, Wabash, Indiana.

10.04 JOINTS

Pipe joints shall be plain end, rubber gasket push-on joints, unless otherwise shown. Push-on joints shall meet the requirements of ASTM D 3139.

Joints to DI fittings shall be rubber gasket mechanical joints with retainer glands, unless otherwise shown. All retainer glands shall be UL listed or FM approved. The retainer glands shall be installed in accordance with the manufacturer's recommendations.

When deflection is required the joint shall be completed prior to setting the deflection. The deflection shall conform to applicable AWWA Standards or manufacturer's recommendation with prior Engineer's approval.

Mechanical joints shall meet the requirements of ANSI/AWWA C111.

10.05 DETECTION

Pipe shall have 3-inch detectable metallic tape of the proper color placed directly above the pipe and 12-inch below finished grade or 6-inch detectable tape between 12-inch and 24-inch below finished grade.

Pipe shall also have tracer wire installed along the pipe alignment. The tracer wire to be used shall be a solid, 10-gauge, high strength, copper clad steel wire with a polyethylene jacket of appropriate color manufactured by Copperhead Industries or approved equal.

10.06 MARKINGS AND COLOR CODING

In addition to the standard markings required by ANSI/AWWA C900-16, the letters NSF denoting National Sanitation Foundation approval shall be included in the marking system, on each pipe length and fitting.

PVC pipe shall be manufactured of solid color as specified, or white with continuous colored ink lettering. The applicable color codes, with light color stabilant, are as follows:

Pipe Use	Color Coding
Potable Water	Safety Blue
Sanitary Sewer	Safety Green
Reclaimed Water	Safety Purple

UV resistant PVC pipe shall be solid color as specified above, or white with colored lettering as specified above.

10.07 HARNESSING

Ductile iron fittings with mechanical joints used with PVC pipe that require harnessing, shall be provided with ductile iron retainer glands such as Series 2000 PV Megalug as manufactured by EBAA Iron Inc., Stargrip 4000 as manufactured by Star Pipe Products, or approved equal.

PVC push-on joints for pipe in casings, for joints to PVC pressure fittings, or where shown, shall be harnessed using a ductile iron retainer for push-on joint PVC pipe, such as Series 1600 as manufactured by EBAA Iron Inc., Series 1100 as manufactured by Star Pipe Products, or approved equal.

10.08 INSPECTION AND TESTING

All pipelines shall remain undisturbed for 24 hours to develop complete strength at all joints. All pipelines shall be subjected to a hydrostatic pressure and leak test per the Specifications.

END OF SECTION

THIS PAGE INTENTIONALLY LEFT BLANK

SECTION 11 - PIPING MATERIALS: HDPE PRESSURE PIPE

11.01 SCOPE OF WORK

The Contractor shall furnish all labor, materials, equipment and incidentals required to install polyethylene pressure pipe, fittings and appurtenances as shown on the Contract Drawings and specified in the Contract Documents and these Standards.

Newly installed pipe shall be kept clean and free of all foreign matter & gouges.

All pipe shall be correctly color coded / identified.

11.02 QUALIFICATIONS

All polyethylene pipe, fittings and appurtenances shall be furnished by a single manufacturer who is fully experienced, reputable and qualified in the manufacture of the items to be furnished.

11.03 POLYETHYLENE PRESSURE PIPE

A. Polyethylene pipe 4" diameter and larger shall be high-density bimodal PE4710 polyethylene resin with a minimum cell classification of 445574 per ASTM D3350, Class 200, DR 11, meeting the requirements of AWWA C906. All pipe materials used in potable water systems shall comply with NSF Standard 61. Outside diameters of water, reclaimed water and pressure sewer HDPE pipes shall be ductile-iron pipe sizing system (DIPS).

B. Polyethylene tubing 2 inches in diameter and smaller for potable water and reclaimed water shall be high-density PE4710 polyethylene resin with a minimum cell classification of 445574 per ASTM D3350, Pressure Class 200, Copper Tube Size (CTS), SDR 9, meeting the requirements of AWWA C901 and ASTM D2737. Butt fusion or CTS brass connections shall be used. All pipe materials used in potable water systems shall comply with NSF Standard 61.

C. Alternatively, polyethylene tubing 2 inches in diameter and smaller for potable water and reclaimed water shall be crosslinked high-density polyethylene (PEXa) 3306 pipe, Pressure Class 200, Copper Tube Size (CTS), SDR 9, meeting the requirements of AWWA C904. Butt fusion or CTS brass connections shall be used. All pipe materials used in potable water systems shall comply with NSF Standard 61.

D. All HDPE MJ Adapters (DIPS) shall be a DIPS Bell MJ Adaptor with a retaining gland, stainless steel reinforcing collar, gland ring, standard MJ gasket, and extra-long Tee-head bolts. The gland ring shall be ductile iron, C110, heavy body gland ring. Twist-off nuts, sized same as tee-head bolts, and shall be used to insure proper actuating of restraining devices.

11.04 JOINTS

Where PE pipe is joined to PE pipe, it shall be by thermal butt fusion. Thermal fusion shall be accomplished in accordance with the written instructions of the pipe manufacturer and fusion equipment supplier. The installer of the thermal butt fused PE pipe shall have received training in

heat fusion pipe joining methods and shall have had experience in performing this type of work. The date of technician certification shall not exceed 12 months before commencing construction.

Where thermal butt fusion cannot be used, or when specifically called for on the Contract Drawings, electro-fused couplings may be used. Fusion shall be in accordance with the written instructions of the fitting manufacturer. However, Contractor must get prior approval from the City and Engineer before implementing a fusion coupling. Solvent epoxy cementing, electro-fusion couplings and mechanical joining with bolt on wrap around clamps or mechanical joints without an adapter shall not be used for connections.

All fittings for HDPE pipe (4” and larger), except for D.I/HDPE Mechanical Joint Adaptors, shall be ductile iron mechanical joint fittings and shall be joined to the pipe using a butt fused restrained mechanical joint adapter. The D.I./HDPE mechanical joint adapter shall be connected to the HDPE pipe by a heat-fused joint on one end, and connected to a ductile iron pipe valve, or fitting with a mechanical joint on the other end.

Flanged adapter, mechanical adapter and molded fittings for 4-inch and larger pipe shall be Pressure Class 200, PE4710, Ductile Iron Pipe Size (DIPS), DR 11, conforming to AWWA C906 with min. cell classification of 445474 per ASTM D3350. Mechanical joints and fittings for 2-inch and smaller tubing shall meet the requirements of: AWWA C901, ASTM D3350 and ASTM D3140.

11.05 DETECTION

Direct buried HDPE pipe shall have 3-inch detectable metallic tape of the proper color placed directly above the pipe and 12-inch below finished grade or 6-inch detectable tape between 12-inch and 24" below finished grade.

Direct buried or horizontal directional drilled HDPE pipe shall also have tracer wire installed along the pipe alignment. The tracer wire to be used shall be a solid, 10-gauge, high strength, copper clad steel wire with a polyethylene jacket of appropriate color manufactured by Copperhead Industries or approved equal.

11.06 IDENTIFICATION

Pipe shall bear identification markings in accordance with AWWA C906.

Pipe shall be color coded blue for water, purple (Pantone 522 C) for reclaimed water or green for pressure sewer using a solid pipe color or embedded colored stripes. Where stripes are used, there shall be a minimum of three stripes equally spaced.

11.07 INSTALLING POLYETHYLENE PRESSURE PIPE AND FITTINGS

All polyethylene pressure pipe shall be installed by direct bury, directional bore, or a method approved by the City prior to construction. If directional bore is used, or if directed by the City, the entire area of construction shall be surrounded by silt barriers during construction.

11.08 INSPECTION AND TESTING

All pipelines shall remain undisturbed for 24 hours to develop complete strength at all joints. All pipelines shall be subjected to a hydrostatic pressure and leak test per the Specifications.

END OF SECTION

THIS PAGE INTENTIONALLY LEFT BLANK

SECTION 12 - PRESSURE PIPE CONSTRUCTION

12.01 GENERAL

The Work in this section includes construction of potable water mains, reclaimed water mains, sanitary force mains, and appurtenances.

Pressure pipelines are to be constructed at locations shown on the Contract Drawings. The City reserves the right to make minor changes in grade and/or alignments as the Work progresses.

Piping materials for pressure pipe installations shall be as follows:

Potable Water Main		
PVC Pipe	2-inch	
DI Pipe	6-inch and larger	
HDPE Pipe	2-inch and larger	ASTM D3350 meeting PE 3408 code designation
Galvanized Pipe	2-inch blow-off assemblies, 2-inch connections, 2-inch short tunneling, and 2-inch short relocations	
Fittings	2-inch PVC pipe:	PVC with gasketed joint
	2-inch galvanized pipe	Galvanized steel with threaded joint
	6-inch and larger pipe	Ductile Iron (DI) with push-on or mechanical joint

Sanitary Force Main		
PVC Pipe	4-inch through 36-inch:	ANSI/AWWA C900-16
DI Pipe	14-inch and larger pipe:	ANSI/AWWA C151
HDPE Pipe	2-inch and larger	ASTM D3350 meeting PE 3408 code designation
PVC Fittings	4-inch through 48-inch pipe:	DI with push-on or mechanical joint
DI Fittings	4-inch and larger pipe:	DI with push-on or mechanical joint
HDPE Fittings	2-inch and larger pipe:	ASTM D3350 meeting PE4710 code designation or DI with HDPE mechanical joint adapter

All existing water services shall be kept in service during the construction of water mains and the preparation of new service connections. Water meters requiring disconnection by the Contractor to accomplish the Work shall be promptly restored to service by the Contractor. The Contractor shall give a minimum of 24 hours prior written notice to all affected water customers of the intended service interruption.

The Contractor's attention is called to the fact that the existing sewer system must be kept in operation at all times. Where connections are made to existing mains or other shutdowns are necessary, permission must be obtained and arrangements must be made with the Utilities

Department for removing from service those mains that will be affected. Shutdowns must be held to a minimum in both number and duration. Bypass pumping and hauling operations may be required to interrupt service.

No valve or other control device on the existing system shall be operated by the Contractor without first obtaining approval from the Utilities Department. The Contractor shall, at least forty-eight (48) hours in advance, notify citizens subject to interruption of service by means of door hangers or any other approved method of the starting time and duration of such interruption.

All pipe, fittings, and appurtenances shall be furnished by the Contractor and be transported, delivered, and installed by the Contractor in accordance with the requirements of the subsection headed "Laying and Jointing Pipelines."

All pipelines shall be tested in accordance with the requirements of the subsection headed "Testing and Disinfection of Pressure Pipelines: Pressure Test."

All potable water and reclaimed water pipelines shall be disinfected before they are put into service as specified in the subsection headed "Testing and Disinfection of Pressure Pipelines: Disinfection."

As-built drawings shall be submitted to the Engineer prior to acceptance of the Work and prior to commencement of the warranty period.

Standards referenced in this Section are the latest revision of the following specifications:

ANSI/AWWA C105	"Polyethylene Encasement for Ductile-Iron Piping for Water and Other Liquids"
ANSI/AWWA C110	"Ductile-Iron and Gray-Iron Fittings, 3-Inch through 48-Inch
ANSI/AWWA C111	"Rubber-Gasket Joints for Ductile-Iron Pressure Pipe and Fittings"
ANSI/AWWA C504	"Rubber-Seated Butterfly Valves"
ANSI/AWWA C509	"Resilient-Seated Gate Valves for Water and Sewerage Systems"
ANSI/AWWA C515	“Reduced Wall, Resilient-Seated Gate Valves for Water Supply Service”
ANSI/AWWA C550	"Protective Epoxy Interior Coating for Valves and Hydrants"
ANSI/AWWA C600	"Installation of Ductile-Iron Water Mains and Their Appurtenances"
ANSI/AWWA C605	"Underground Installation of PVC Pressure Pipe and Fittings for Water"
ANSI/AWWA C651	"Disinfecting Water Mains"
ANSI/AWWA C800	"Underground Service Line Valves and Fittings"

ANSI/AWWA C900-16	"Polyvinyl Chloride (PVC) Pressure Pipe and Fabricated Fittings, 4 In. Through 60 In."
ANSI/AWWA C901	"Polyethylene (PE) Pressure Pipe and Tubing, 1/2-Inch through 3-Inch for Water Service"
ANSI/AWWA C906	"Polyvinyl Chloride (PVC) Pressure Pipe and Fittings 4-Inch through 63-Inch, for Water Distribution and Transmission"
ANSI/AWWA C901	"Polyethylene (PE) Pressure Pipe and Tubing, 1/2-Inch through 3-Inch for Water Service"
ASTM A 126	“Specification for Gray Iron Castings for Valves, Flanges, and Pipe Fittings”
ASTM D 429	"Test Methods for Rubber Property - Adhesion to Rigid Substrates"
ASTM D 3139	"Standard Specification for Joints for Plastic Pressure Pipes using Flexible Elastomeric Seals"

12.02 DATA TO BE SUBMITTED

The Contractor shall submit shop drawings in accordance with the Specifications.

Pipe
Valves
Joints and joint accessories
Fittings
Specials and accessories
Special linings and coatings
Water service materials

12.03 MATERIALS

All pressure pipe materials shall be in accordance with the applicable requirements of the Technical Specifications sections headed:

DIP “Piping Materials: Ductile Iron Pipe and Fittings”
PVC “Piping Materials: PVC Pressure Pipe”
HDPE “Piping Materials: HDPE Pressure Pipe”

All pressure pipe materials (pipe, fittings, valves, valve boxes, tapping valves and sleeves, precast thrust blocks, blow-offs, house services, etc.) except fire hydrants, shall be furnished by the Contractor. All pressure pipe fittings and valves shall be cast and manufactured in the United States of America unless complete certification is furnished in accordance with ANSI/AWWA C110.

All materials furnished shall be new. Materials not specified herein or on the Contract Drawings

shall conform to AWWA Standards and Industry Standards.

Piping, concrete, masonry, and all other materials shall conform to those materials as specified in the appropriate Technical Specifications sections for those materials. Specific pressure pipe and appurtenances materials shall conform to the following specifications:

All materials found during the progress of work to have flaws, cracks, or other defects will be rejected by the Engineer regardless of whether or not it has been installed and shall be replaced by and at the expense of the Contractor.

Materials shall not be stacked or placed under materials in such a manner that damage could result. Slings, hooks, or tongs used for lifting shall be padded in such a manner as to prevent damage to exterior surfaces, interior linings and components. If any part of the coating, lining or components is damaged, the repairs or replacement shall be made by the Contractor at his expense and in a manner satisfactory to the Engineer prior to attempting installation. In the event that materials supplied by the City are defective, the Contractor shall notify the Engineer immediately so arrangements can be made for replacing such devices.

12.03.01 2-INCH DIAMETER PIPE

1. Steel pipe shall be standard galvanized steel, Schedule 40, furnished in 21-foot lengths with both ends threaded.

2. All 2-inch steel fittings shall have screw type joints.

3. Pipe thread compound shall not be used. Threads shall be wrapped with teflon joint tape, non-hardening, Mil. Spec. T27730A. Cutting oils shall be dark, non-toxic, and equal to cutting oil manufactured by the Rigid Tool Company. The Contractor shall take caution not to allow cutting oil inside the pipe and shall remove all cuttings. Cutting oils shall be UL listed or NSF approved for use in potable water systems.

4. PVC pressure pipe to be used in the potable water system shall be Safety Blue in color or white with Safety Blue identification tape or color coded approved ink lettering as specified. PVC pressure pipe to be used in the reclaimed water system shall be Safety Purple in color or white with Safety Purple identification tape or approved color-coded ink lettering as specified.

   PVC pipe shall conform to the Technical Specifications section headed "Piping Materials - PVC Pressure Pipe."

5. HDPE pressure pipe shall conform to the Technical Specifications section headed, “Piping Materials – HDPE Pressure Pipe.”

12.03.02 VALVES - GENERAL

1. Valves shall be iron body, bronze mounted, and have joint ends as shown or specified. Valves shall have O-ring seals, unless otherwise specified.

2. A standard 2-inch square AWWA operating nut shall be provided on each valve. Valves shall have non-rising stems and shall open when the nut is turned counterclockwise. Each nut shall be marked with an arrow.

3. All valves of the same type shall be from the same manufacturer. Parts of valves of the same type and size shall be interchangeable. Unless otherwise specified, all valves shall be designed for a cold water working pressure of 150 psi.

4. All valves shall be furnished complete with gaskets, bolts, nuts, and glands necessary for installation.

5. All valves larger than 2-inch shall have restrained rubber gasketed compression joints, or mechanical joints with retainer glands, conforming to ANSI/AWWA C111, at the Contractor's option unless otherwise noted.

6. Valves used for sanitary force mains shall be the same as those used in other pressure pipe applications, unless otherwise specified.

7. Upon request, the valve manufacturer shall provide an affidavit of compliance, proof of design testing, and proof of production testing.

12.04 CONNECTIONS TO EXISTING MAINS

The Contractor shall connect the new pressure pipelines to the existing pressure pipelines at locations as shown on the Contract Drawings and as specified. The Engineer shall be notified at least 2 working days prior to making connections. The time at which the connections are to be made and the manner of making the connections shall be subject to review and acceptance by the Engineer.

The connections to the existing pressure pipeline shall be made to minimize the time during which the existing pressure pipeline will be out of service. The Contractor shall utilize the necessary number of crews and types of equipment and shall work the necessary hours to ensure completion of the connections within the time specified.

12.05 CONSTRUCTION OPERATIONS

Pressure pipelines shall be installed in open trenches, except when another method, such as jacking, boring, or tunneling, is shown on the Contract Drawings, specified, or ordered. Jetting shall not be allowed under roadway, alley, or driveway. All mains shall be laid and maintained at the required lines and grades with fittings, valves and appurtenances at the described locations. All pipe shall be laid to the depth as shown on the Plans, or when a depth is not indicated, with a minimum cover of thirty-six (36) inches outside of the roadway, and forty-two (42) inches under the roadway. Grade lines shall be set by the Contractor. The tolerance of such grades shall not be more than that specified on the drawings. When no tolerance is indicated a tolerance of 0.5 foot shall be used. All other realignments must be approved by the Engineer. The Contractor shall have suitable survey equipment on the site at all times.

All joints, fittings and other appurtenances shall not be covered until inspected by the City Inspector.

Non-compliance will require excavation of all joints and fittings

Pipe and fittings shall not be strung in residential areas more than 3 weeks in advance of pipelaying, unless otherwise approved by the Engineer. The Contractor shall install pipelines, pressure test, disinfect, and restore the ground surface in pipeline segments of 3,500 linear feet or less, except as otherwise approved by the Engineer. The new segment of pipelaying shall not start until restoration has commenced on the previous segment, or as approved by the Engineer.

Pipeline segments shall be pressure tested and disinfected after pipelaying is complete, to minimize inconvenience to the Public, except as otherwise approved by the Engineer.

No excavation shall be left open over a weekend. All pavement openings shall be completely repaired as specified in the Technical Specifications section headed "Surface Restoration" within 7 days of opening, or a temporary asphaltic pavement patch placed and maintained daily.

Where shown on the Contract Drawings or where directed by the Engineer, the Contractor shall remove existing pipelines which are shown to be abandoned. Any such pipe, fitting, etc., shall be removed after the new pipeline (replacing the existing line) is accepted and put into service by the City. Removed pipe and appurtenances 6 inches or larger which are described elsewhere or deemed by the Engineer to be reusable shall be delivered to the City by the Contractor. All material not deemed reusable shall become the Contractor's property and shall be removed from the site by the Contractor. No additional payment will be made for salvaging pipe and fittings.

In general, pipe six inches and smaller abandoned within City rights-of-way shall be capped at both ends and abandoned in place. Grouting is not required unless specifically required by the Engineer or the City. Abandoned pipes eight inches and larger shall be filled with grout or flowable fill unless otherwise directed by the City or the Engineer. Pipe abandoned in rights-of-way owned by municipalities other than the City shall be subject to the requirements of the agency having jurisdiction. All pipes shall be abandoned in a manner which results in the abandoned pipeline not being pressurized.

Short tunneling of pressure pipe shall be constructed as required to protect trees, shrubs, and existing surface or subsurface utilities and structures. Short tunnels shall be constructed to the lengths shown on the Contract Drawings, specified, or directed by the Engineer. The Contractor will be allowed to utilize an auger machine and to push or pull the carrier pipe into the bore without the need of a casing. The Contractor shall install the pipe within the bore hole on a line and grade to allow connection to open cut piping adjacent to the bore hole within pipe jointing alignment limits defined for the pipe in question. The completed installation shall not result in settlement of soil under the obstacle.

Existing fences shall be restored by the Contractor and shall be finished and installed so that the restoration is equal to or better than the original. Only those portions of original fencing or materials there from, that the Engineer approves for re-use, shall be used by the Contractor in fence restoration. All other materials, including lumber, paint, wood preservative, concrete, and metal products shall be furnished by the Contractor.

The cost of protecting, replacing, relocating, and maintaining (including using hay bales) storm and sanitary sewerage facilities shall be included in the various unit price Pay Items, and no separate

payment will be made therefore unless otherwise specified in other Pay Items.

12.06 LAYING AND JOINTING PRESSURE PIPELINES

All pressure pipeline installation shall comply with applicable standards of ANSI/AWWA C600, C605, and C906, and with these Specifications.

Mechanical joint fittings and valves installed in sections of unrestrained pipe, and in blow-offs, shall be installed using ductile iron retainer glands, as set forth in the Technical Specifications section headed "Piping Materials: Ductile Iron Pipe."

PVC push-on fittings for pressure pipelines shall conform to the Technical Specifications section headed "Piping Materials: PVC Pressure Pipe."

Laying and jointing of HDPE pressure pipe shall conform to the Technical Specifications section headed “Piping Materials: HDPE Pressure Pipe.”

Excavation and backfill shall conform to the Technical Specifications section headed "Excavation and Backfill."

In lieu of jacking and boring or pushing of pipe up to 4-inch in diameter, the Contractor may use a soft bore directional drilling process as provided by Flow Mole Corporation or approved equal.

Cover for all pressure pipeline Work, if not shown on the Contract Drawings, shall be not less than:

	2-inch and 4-inch	6-inch and larger
Under roadways and alleys:	36 inches	42 inches
Under grass and sidewalks:	24 inches	36 inches

Unless otherwise noted on the Contract Drawings or in other sections of this Specification, the pressure pipeline shall be handled and installed in strict accordance with the manufacturer's instructions and with the applicable AWWA Standards. If a conflict exists between the manufacturer's instructions and the AWWA Standards, the manufacturer's instructions shall govern.

Prior to installation, all pipe shall be inspected for defects and all lump or excess coatings shall be removed. The inside of the bell and outside of the spigot shall be cleaned prior to joining of all pipe. Caution shall be taken to prevent damage to the pipe during lowering into the trench.

Any defective material shall be removed from the job site immediately. Should a defect be discovered after the item has been placed in the trench, the replacement will be at the Contractor's expense. Materials shall be stored along installation routes in a manner acceptable to the Engineer or as described elsewhere in the Specifications.

Polyethylene wrapping shall be installed on ductile iron pipe and appurtenances where shown on the Contract Drawings or where ordered by the Engineer.

Polyethylene encasement materials and installation shall meet the applicable requirements of ANSI/AWWA C105. Care shall be taken while backfilling to prevent puncturing, tearing, or otherwise damaging the polyethylene wrapping.

The Contractor shall use every precaution during construction to protect the pressure pipeline against the entry of non-potable water, dirt, wood, small animals, and any other foreign material that would hinder or contaminate the operation of the pipeline. Where the groundwater elevation is above the bottom of the trench, the Contractor shall provide suitable dewatering equipment.

All dewatering shall meet the requirements set forth in the Technical Specifications section headed "Excavation and Backfill."

Watertight plugs of an approved type shall be installed in the ends of all pipe, fittings, and valves during 24-hour or longer periods when installation is not in progress, or as required to prevent ditch water, sand, etc. from entering the pipe. Standard plugs shall be inserted into all dead end pipes, tees or crosses; spigot ends shall be capped; flanged ends shall have blind flanges, or sheet metal or plywood caps. Plugs installed for pressure testing shall be fully secured and restrained to withstand the test pressure.

Where plugging is required because of Contract division or phasing for later connection, the ends of such lines shall be equipped with a permanent type cast iron or ductile iron plug/cap or blind flange with or without a blowoff cock, as shown on the Drawings. Installation or removal of such plugging shall be considered incidental to the work and no payment shall be expected for this work by the Contractor.

Concrete thrust blocks of the proper size and type shall be furnished and installed at all locations where a change in the pipe alignment exceeds 7 degrees or dead ends, unless Contract Drawings show that adjacent pipe, in excess of 2 bells each direction, shall be restrained. Concrete thrust blocks used on 12-inch and larger mains shall be poured in place. Precast thrust blocks may be used on mains less than 12-inch in diameter. Thrust block concrete shall conform to the Technical Specifications section headed "Concrete, Masonry, and Reinforcing Steel."

Boring, soft boring, and jacking work other than new services shall strictly conform to all applicable stipulations of the State of Florida Department of Transportation Utility Accommodation Manual, unless otherwise specified. Softbore shall utilize a guided boring system, equal to FlowMole or DirectLine.

12.06.01 Expose Existing Pressure Pipeline and Record Elevation

The Contractor shall expose the existing pressure pipelines prior to the construction stake-out to determine the station, offset, and elevation, before actual construction begins. The Contract Drawings may be modified by the Engineer, as necessary, to accommodate the pressure pipelines which must remain.

12.06.02 Conflict Adjustment of Existing Pressure Pipelines

In some locations existing pressure pipelines intended to remain in service may need to be adjusted horizontally or vertically to avoid conflicts with the proposed storm drains, sanitary

sewers, roadway base, manholes, inlets, or other proposed improvements. The conflict may not be shown on the Contract Drawings.

In the event that a conflict is encountered and confirmed by the Engineer, the adjustment to alleviate the conflict shall be constructed in accordance with the applicable "Obstruction Detail" or as ordered by the Engineer.

12.06.03 Pipe Joints

1. **Standard Mechanical Joints**: In making mechanical joints, the pipe shall be centered in the bells. The surfaces of ductile iron pipe with which the rubber gasket comes in contact shall be thoroughly brushed with a wire brush just prior to assembly of the joint. The surfaces of PVC pipe shall be wiped clean with a cloth and soapy water. A pipe lubricant shall be brushed over the gasket just prior to installation. The gasket and gland shall be placed in position, the bolts inserted, and the nuts tightened finger tight. The nuts shall be tightened by means of a torque wrench, or as approved by the City, in such a manner that the gland shall be brought up evenly into the joint. The following range of bolt torques shall be applied:

Bolt Size (inch dia.)	Range of Torque (foot lbs.)
5/8	45 - 60
3/4	75 - 90
1	70 - 100

   If effective sealing is not obtained at a maximum torque listed above, the joint shall be disassembled and reassembled after thorough cleaning.

2. **DI Pipe Push-On Joints**: In making up the push-on rubber gasket joint, the gasket seat in the socket shall be thoroughly brushed with a wire brush and the gasket shall be wiped with a clean cloth. The gasket shall be placed in the socket with the large round end entering first so that the groove fits over the bend in the seat. A thin film of approved lubricant shall then be applied to the inside surface of the gasket that will come in contact with the entering pipe. The plain end of the pipe to be entered shall be thoroughly brushed with a wire brush and placed in alignment with the bell of the pipe to which it is to be joined. Ends of cut pipe shall be ground to a smooth bevel edge before inserting in bell. The joint shall be made up by exerting sufficient force on the entering pipe so that its plain end is moved past the gasket until it makes contact with the base of the socket.

   Backhoe buckets or excavation equipment are not to be applied directly to the pipe.

3. **PVC Pipe Push-On Joints**: Procedures for the making of PVC pipe push-on joints shall be similar in nature to those set forth in the preceding paragraph (except the bell shall be wiped with a clean cloth). Procedures shall strictly follow the manufacturer's printed instruction for the making of joints. In a like manner, all other PVC pipeline Work shall be performed in accordance with the manufacturer's recommendations.

4. **Restrained Joints**: Ductile iron mechanical joint pipe, fittings, and valves 12-inch and smaller that require restraint shall be installed using ductile iron retainer glands, as specified. The glands shall be installed in accordance with the manufacturer's recommendations. Glands using a frangible bolt for setting the restraining devices shall be tightened with standard wrenches.

   Glands using standard bolts for setting the restraining devices shall be tightened with a torque wrench. The assembly shall be given 2 heavy coats of a bituminous coating after installation.

   Restrained push-on joint pipe, fittings, and valves, where shown on the Contract Drawings, shall be with a restraining gland or restraining gasket, as specified.

   Pipe, fittings, and valve joints shall be restrained at locations shown on the Contract Drawings, or as specified. In addition, all other fittings and valves shall be installed using a ductile iron retainer gland.

   The following shall apply to various restrained joint/pipe size type:

Pipe Size (Inches)	Restrained Joint Type
2	No restrained joint allowed
4 through 12	Mechanical joint/retainer glands Tyton Pipe/Loc Fast Gasket, or equal
16 and larger	Mechanical joint/retainer glands TR Flex, or equal, pipe valves and fittings

12.06.04 Color Coding

Prior to backfilling, all pressure pipelines shall be identified with color coding. The applicable color codes, with light color stabilant, are:

Pipe Use	Color Coding
Potable Water	Safety Blue
Sanitary Sewer	Safety Green
Reclaimed Water	Safety Purple

1. **Coding on the Pipe**: HDPE and PVC pipe shall be colored at the point of manufacture. If black or white pipe must be used, pipe shall have City approved color coded ink lettering stamped on the pipe or shall be continuously taped with plastic adhesive tape using the color coding as stated above. Plastic adhesive tape shall be applied as follows:

   Black and white 2-inch and 4-inch pipe -- continuously taped at top center.

   Black and white 6-inch and larger pipe -- continuously taped at "10, 12, and 2 o'clock."

   Ductile iron pipe shall be continuously painted along the top one-third of the pipe with a 2-part high build epoxy-polyamide paint or approved equal. The paint shall be dry prior to the pipe being installed.

Ductile iron pipe wrapped in color coded polyethylene wrapping is not required to be painted.

2. **Coding above the Pipe**: Pipe shall have 3-inch detectable metallic tape of the proper color placed directly above the pipe and 12-inch below finished grade or 6-inch detectable tape between 12-inch and 24-inch below finished grade.

12.06.05 Valves and Valve Boxes

Valves shall be installed in a closed position, free from all distortion and strain, and left in satisfactory operating condition. Valves shall be tested in place by the Contractor, as far as practicable, and any defects in valves or connections shall be corrected to the satisfaction of the Engineer.

Tapping sleeves shall be pressure tested prior to making the tap.

Valve boxes with stay-put cover shall be vertical and concentric with the valve stem. Any valve box which is moved from its original position, preventing the operation of the valve stem, shall be satisfactorily reset by the Contractor at his expense.

Please see the Specifications for additional information for Valves.

12.06.06 Connections (Tie-ins) and Shutdowns

The Contractor shall furnish all labor and equipment necessary for the connection of approved pipelines to the existing system and the shutdown, removal or disconnection and plugging of existing pipelines as indicated on the Contract Drawings or as directed by the Engineer.

This may be required in instances where existing pipelines are to be abandoned or where a short segment of existing pipeline must be cut out and adjusted either vertically or horizontally to avoid a conflict with a proposed storm drain or storm drain structure, sanitary sewer, or other proposed improvement.

The Contractor shall make all taps and tie-ins required, under the direct observation of the Engineer.

12.07 PIPELINE CLEANING

All mains shall be pigged, cleaned and flushed to remove all sand and other foreign matter if required by the City and Engineer. The Contractor shall be responsible for developing a pigging and flushing plan to be submitted to the Engineer for approval prior to pigging and flushing. The Contractor shall dispose of all water used pigging and for flushing without causing a nuisance or property damage, in accordance with state and local requirements. Any permits or fees required for the disposal of flushing water shall be the responsibility of the Contractor.

Flushing water used by the Contractor shall be taken from an approved metered source. The water utility will provide the meter and designate the source. Potable and reclaimed flushing water shall be at the Contractor’s expense. Reclaimed water should be used for sanitary force mains and potable

water can be used for all service types.

The cleaning of the pipeline shall be done by the controlled and pressurized passage of a polyurethane pig of varying dimensions, coatings and densities as determined by the City through the piping system.

A series of pigs shall be entered into the system at a point as near to the beginning as is logistically and mechanically feasible.

A launching assembly shall be used as the entrance point for the pig. This assembly shall allow for the following:

1. The entering of pigs into the system by providing the means to induce flow from an external source, independent of the flows and pressures immediately available from the system, on the back of the pig to develop sufficient pressure to force the pig through the system.
2. A means to control and regulate the flow.
3. A means to monitor the flows and pressures.
4. A means to connect and disconnect from the system without any disruption to the operation of the system.

The pig shall be removed or discharged from the system at a point as near to the end as is logistically and mechanically feasible.

The contractor shall be responsible for the retrieval of the pig at the discharge point. This may include setting a trap that will not disrupt normal flow and operations but will capture the pig and any debris. A retrieval assembly may also be used but said assembly shall be able to connect and disconnect from the system without any disruption to the operation of the system.

Alternative launching and retrieval methods shall be done with the prior approval of the City.

Any pig that cannot progress through the piping system shall be located by the contractor and removed by excavation of the pipe to remove the blockage. All pipe repairs shall be the responsibility of the contractor and shall be performed with as little disruption to the system as possible.

Any increase in pressure that cannot be accounted for, i.e. fittings or valves or additional cleaning runs, shall be investigated, per the Engineers' review and acceptance, by locating the pig at the beginning of the increased pressure and excavating to determine the cause of the pressure increase. All pipe repairs shall be the responsibility of the contractor and shall be performed with as little disruption to the system as possible.

Final flushing of the cleansed lines shall be performed after the last successful run of the pig as determined by the City. The contractor shall be responsible for all applicable flushing and disinfection requirements for potable water lines.

The contractor shall maintain and provide a report at the end of the cleaning procedure containing the following:

1. The pressures in the pipe during the pigging procedure.
2. Any inline problems encountered during the procedure including all excavations with detailed locations, reason for the excavation and any corrective measures taken to the pipeline.
3. A record of the pigs used, their sizes, styles and other pertinent information regarding what materials were used during the cleaning.
4. An analysis of the condition of the pipeline before and after the cleaning procedure.

12.08 TESTING AND DISINFECTION OF PRESSURE PIPELINES

All new pressure pipelines shall be subjected to a water pressure test between valves. In order to expedite the restoration of certain surface facilities, it may be required that individual sections between valves be tested as soon as the valves are installed. Disinfection shall be accomplished after the pressure test requirements have been met for the entire segment of pressure pipe.

The Contractor shall furnish all labor, materials, equipment, and chemicals to perform the required pressure tests and disinfection. All testing and disinfection will be subject to City inspection. All new valves shall be operated by the Contractor. However, all tie-in valves to the existing water system shall only be operated with the approval of, and in the presence of, the City, and shall be scheduled to be performed during the standard work hours of City staff, unless otherwise approved by the Engineer.

All existing valves shall be operated by the City or by the Contractor under the direct supervision of the City.

Testing and disinfection of pressure pipelines shall be completed per Flushing, Testing, and Disinfection section.

12.09 SURFACE RESTORATION AND MISCELLANEOUS

All surfaces disturbed by the Contractor shall be restored to their original condition in conformance to the Technical Specifications sections headed "Surface Restoration".

Sanitary sewers and laterals which cross a new potable water pipeline with less than 18 inches clear vertical separation, shall be replaced with 20 linear feet of ductile iron pipe, PVC pressure pipe (ANSI/AWWA C900-16), or SDR26 gravity pipe centered on the new pipeline, or as ordered by the Engineer.

Sanitary sewers and/or laterals which conflict with the new pipeline or are damaged by pipeline construction shall be reconstructed with ductile iron pipe, PVC pressure pipe (ANSI/AWWA C900-16), or SDR26 gravity pipe, as ordered by the Engineer.

Each valve box in an unpaved area shall have an 18-inch by 18-inch by 4-inch concrete pad. Pad shall be 1 inch above grade, and sod shall be so placed to maintain this 1 inch.

END OF SECTION

THIS PAGE INTENTIONALLY LEFT BLANK

SECTION 13 - DIRECTIONAL BORING OF PIPE

13.01 GENERAL

A. All existing structures, water and sewer lines, storm drains, utilities, driveways, sidewalks, signs, mail boxes, fences, trees, landscaping, and any other improvement or facility in the construction area that the Contractor disturbs for his own construction purposes shall be replaced to original condition at no additional cost to the City.

B. For “Navigable Waters of the U.S.” reference 33 of the Code of Federal Regulations, Part 329.

C. For “Waters of the U.S.” reference 33 of the Code of Federal Regulations, Part 323.

D. For “Waters of the State” reference Section 62-301 of the Florida Administrative Code.

13.02 TESTING

A. In place soil compaction tests shall be performed by a qualified testing laboratory.

B. Compaction tests shall be taken at every excavation, except in the road crossings or road shoulders; tests are to be taken according to current FDOT Standards.

C. All pipe shall be tested in accordance with the appropriate material specifications.

D. Reference Standards: American Society for Testing and Materials (ASTM), D1557, Moisture-Density Relations of Soils Using 10-lb. Rammer and 18-in. Drop.

E. The density of soil in place shall be a minimum of 95 percent in accordance with ASTM test 1557-70T, Method A or C.

13.03 QUALIFICATIONS

A. Pipe Manufacturer: All pipe and fittings shall be furnished by a single manufacturer who is fully experienced, reputable and qualified in the manufacture of the items to be furnished.

B. Drilling Supervisor: The Contractor shall provide a competent boring specialist who shall remain on the project site during the entirety of the directional boring operation. This includes, but is not limited to, drilling fluid preparation, seaming, boring and pulling. The boring specialist shall have a minimum of five years of experience in supervising directional bores of similar nature, diameter, materials and lengths.

C. Pipe Fusion: All boring and fusing equipment shall be certified for operation. The Contractor responsible for thermal butt fusing pipe and fittings shall have manufacturer certification for performing such work or a minimum of five years of experience performing this type of work. If no certification is available, written documentation of the required work experience shall be submitted for review and acceptance.

D. Drilling Fluid Specialist: The personnel responsible for supervising the supply, mixing, monitoring fluid quality, pumping and re-circulation system proposed for the drilling fluid shall have a written certification issued by the Drilling Fluid manufacturer for performing such work or a minimum of five years of experience performing this type of work. If no certification is available, written documentation of the required work experience for the proposed personnel shall be submitted for review and acceptance.

13.04 SUBMITTALS

A. Detailed description including specifications and catalog cuts for:

1. Shop drawings and catalog data for all HDD equipment.
2. The pipe manufacturer's maximum degree of radial bending allowed for the pipe when full and when empty and pullback force recommended setting.
3. Steering and tracking devices including specific tracer wire.
4. Drilling fluids; the drilling fluid submittal shall include the ratio of mixture to water, including any additives, based on the Contractor’s field observations prior to construction, knowledge and experience with drilling in similar conditions, and any soil data provided in the Contract Documents, which shall be verified by the fluid specialist.
5. Shop drawings for the breakaway swivel, including the method of setting the swivels’ break point and set point to be used.
6. Shop drawings for sizing of the mandrel for pull through testing
7. Pipe assembly procedure, details of support devices, and staging area layout including methods to avoid interference with local streets, driveways, and sidewalks.
8. Details of pipe fusion procedures and copies of the fusion technician qualification certification or documentation.
9. Drilling fluid technician qualification certification or documentation

B. Bore Plan: For all contiguous piping installations over 300 feet in length or any installations for piping larger than 4” in diameter, the Contractor shall submit a Bore Plan that includes the following at least 21 days prior to beginning work:

1. Contact information and experience for the drilling fluid specialist.
2. The number of passes the bore will include to get the product pipe installed.
3. The pilot bore and all reaming bore sizes including the final pullback with the product pipe.
4. Drilling rod length in feet.
5. The pilot bore, pre-ream bores (if any) and pullback production rate in minutes per (drilling) rod to maintain adequate mud flow.
6. Details of the entry and exit pit locations along with entry and exit angles for the bore, drawn to scale, depicting the position of all required equipment, access points, existing facilities to remain in place, existing traffic lanes to be maintained in operation, office trailers and storage sites.
7. The method of fusing or joining pipe of adjacent bores to ensure that the joint is on grade with the installed pipe.

C. If the Contractor is planning on deviating from bid document Profile, then the Contractor is required to submit detailed calculations supporting the modifications. The calculations

shall consist of the following:

1. Predicted and allowable pulling loads and bending stress, and the minimum allowable bending radius (Provide an estimate of the pulling loads and bending stress at characteristic points along the drill path when the curvature of the drill path changes).
2. Calculations for safety factors against ring collapse of the pipe during pullback and confirm ring deflection is within limits.
3. Graphical representation of evaluation of frac-out risks, showing maximum allowable and minimum required pressures at all critical locations along the bore alignment. The calculations shall be conducted by or under the direct supervision of a Professional Engineer licensed in the State of Florida, who shall stamp and seal the calculations.
4. The deviation drawings shall include a HDD Profile, plan view and cross-section. The Contractor is also recommended to submit deviation drawings for larger bores for site layout plans (Rig and Product Pipe Layout site) and pipeline stringing area (rollers).

D. Bore Schedule: For all contiguous piping installations over 300 feet in length or any installations for piping larger than 4-inches in diameter, the Contractor shall submit a detailed schedule for the HDD installation at least fifteen days prior to mobilization. The detail schedule shall identify all major construction activities and durations, with beginning and completion dates shown. The detail schedule shall be updated at least every two weeks or more frequently, as directed by the Engineer, and shall include but not limited to the following items:

1. Pre-construction walk over and inspection
2. Regular Mobilization and set-up
3. Pilot bore
4. Pre-reaming and reaming
5. Layout and thermal butt fusing of pipe
6. Pressure Testing of pipe prior to pullback when practical or as directed by the Engineer.
7. Final reaming and pullback of product pipe.
8. Annulus grouting after installation (optional).
9. Mandrel/pig test to confirm deformations of product pipe are within allowable tolerances.
10. Cleanup, surface restoration, and demobilization.

F. Prepare a Frac-out and Surface Spill Contingency Plan. Submit the plan to the Engineer prior to construction. Submit a letter of intent signed by an authorized representative of Contractor, confirming that the plan will be followed. The contingency plan for inadvertent returns/hydrofracture shall address all potential pathways for release of drilling fluid, and shall address containment, cleanup, and mitigation measures as well as inspection and reporting procedures and points of contact for regulatory and permitting agencies. The Plan shall address releases to the ground surface and controlled releases at any relief wells installed by the Contractor. Describe the location, installation, monitoring, and abandonment procedures for any relief wells. Provide stand-by equipment on-site to recover fluids via vacuum. Describe equipment and procedures

to private residence yard areas to inspect for and clean up fluid releases.

G. The Contractor shall submit an as-built profile of the pilot bore within twenty-four (24) hours of completion of the pilot bore to the Engineer and City Representative. Contractor shall receive written review and acceptance from either party in order to continue with the proposed profile alignment.

H. Furnish a Bore Path Report to the City within seven days of the completion of each bore path. Data collected by the City Representative does not relieve the Contractor from the responsibility of recording his own data. Include the following in the report:

1. Location of project, project name and number
2. Name of person collecting data, including title, position and company name
3. Investigation site location (Contract plans station number or reference to a permanent structure within the project right-of-way)
4. Driller's Log & identification of the detection method used
5. Elevations and offset dimensions of installed pipe as referenced to the drawings
6. Data log of pullback force during product pipe installation
7. All failed bores. Include length of pipe left in place and explanation of failed installation.

13.05 MATERIALS

A. Incidental materials that may or may not be used to install the product depending on field requirements are not paid for separately and will be included in the cost of the installed product.

B. Drilling Fluids shall use a mixture of bentonite clay or other approved stabilizing agent mixed with potable water with a pH of 8.5 to 10.0 to create the drilling fluid for lubrication and soil stabilization. Vary the fluid viscosity to best fit the soil conditions encountered. Contractor shall have appropriate additives for drilling fluid available for different soil conditions that may be encountered. Do not use any other chemicals or polymer surfactants in the drilling fluid without written consent from the City. Certify to the City in writing that any chemicals to be added are environmentally safe and not harmful or corrosive to the product pipe.

C. For drilling operations that will be below waters of the State of Florida, only bentonite free drilling fluids shall be used. Acceptable products are BioMax, manufactured by M-I Swaco, Inc., P.O. Box 2216, Laurel, Mississippi 39440, Phone: (800) 731-7331 or Bio-Bore, manufactured by Baroid Drilling Fluids, Inc., P.O. Box 1675, Houston, Texas 77251, Phone: (731) 987-5900 or approved equal.

D. Identify the source of water for mixing the drilling fluid. Approvals and permits are required for obtaining water from such sources as streams, rivers, ponds or fire hydrants. Any water source used other than potable water may require a pH test.

E. Directional Drilling/Boring pipeline construction shall require the installation of minimum #10 AWG Copper Clad, Extra High Strength Steel tracer wire with minimum 1,150 lb.

break load, with a minimum 45 mil HDPE insulation thickness. Refer to the Specifications for tracer wire details.

F. Breakaway connectors shall be supplied by DCD Design & Manufacturing, Condux International, Inc. or approved equal.

13.06 SITE CONDITIONS

A. Carry out excavation for entry, exit, recovery pits, slurry sump pits, or any other excavation as specified in the Contract documents. Sump pits are required to contain drilling fluids if vacuum devices are not operated throughout the drilling operation, unless approved by the City.

B. Within 48 hours of completing installation of the boring product, clean the work site of all excess slurry or spoils. Take responsibility for the removal and final disposition of excess slurry or spoils. Ensure that the work site is restored to pre-construction conditions or as identified on the Contract Drawings.

C. Exposure of product pipe to sunlight shall be limited to 14 consecutive days unless approved by the City.

D. The pipe shall be supported at intervals along its length with rollers or Teflon pads to minimize frictional forces when being pulled, and to hold the pipe above the ground. Surface cuts or scratches greater than or equal to the maximum defect depth in 3.08 E are not acceptable.

13.07 DAMAGE RESTORATION & REMEDIATION

A. The Contractor shall take responsibility for restoration for any damage caused by heaving, settlement, separation of pavement, escaping drilling fluid (frac-out), or the directional drilling operation, at no cost to the City.

B. When required by the City, provide detailed Contract Drawings which show how damage to any roadway facility will be remedied. These details will become part of the Record Drawings Package. Remediation Plans must follow the same guidelines for development and presentation of the Record Drawings. When remediation plans are required, they must be approved by the City before any work proceeds.

C. For HDD operations that will be below waters of the State of Florida, the contractor shall be responsible for any damage caused by the drilling operation, including, but not limited to, fracturing of the channel bottom. Any State or Federal required environmental cleanup due to the release of drilling fluids into State waters shall be at the Contractor's expense. The Contractor may at his own expense increase the depth of his drilling operations upon the approval from the City.

13.08 QUALIFICATIONS FOR REJECTION OF DIRECTIONAL BORE

A. The City may reject any portion of the work that is deemed to be non-responsive to the Contract requirements or not in conformance with approved Contract Drawings and

submittals, and for other factors including the following:

1. Failed Bore: When there is any indication that the installed product has sustained damage, stop all work, notify the City and investigate damage. The City may require a pressure and / or mandrel test at no additional cost to the City and shall have a City representative present during the test. Perform all testing within 24 hours unless otherwise approved by the City. Furnish a copy of the test results and all bore logs to the City for review and acceptance. The City is allowed up to 5 working days to approve or determine if the product installation is not in compliance with the specifications.
2. Obstructions: If an obstruction is encountered during boring which prevents completion of the installation in accordance with the design location and specification, the pipe may be taken out of service and left in place at the discretion of the City.
3. Pull-back Failure: If the installed breakaway device should fail during pull back.
4. Loss of Drilling Fluids: If the drilling fluid is “lost” during the pull back of the product and cannot be regained within the required timeframe of the manufacturer or if more than a reasonable amount of fluid is used to fill an unknown void and flow cannot be regained. No pipe shall be pulled without visible flow of drilling fluid.
5. Test Failure: If the pipe shall fail a hydraulic pressure test or mandrel test as specified by the City.
6. Damaged Pipe: If at any time when the product is pulled back and any exposed areas have a greater than allowable “gouging” or visible marring of the pipe per the table in 3.08 G.
7. Alignment Tolerance Exceeded: If the vertical and horizontal limits are not within tolerances.
8. Defective Material: Any other defect in material or workmanship which would affect the quality, performance, or installation life of the installed pipeline.

B. Remediation: All rejected bores shall be at the Contractor’s expense to correct and provide a satisfactory installed product. The Contractor shall submit to the City a revised installation plan and procedure for review and acceptance before resuming work. The City may require non-compliant installations to be filled with excavatable flowable fill or to be completely removed at no additional cost to the City.

13.09 PRODUCT LOCATING AND TRACKING

A. The City recognizes walkover, wire line, and wire line with surface grid verification, or any other system as approved by the City, as the accepted methods of tracking directional bores. Use a locating and tracking system capable of ensuring that the proposed installation is installed as intended. The locating and tracking system must provide information on:

1. Clock and pitch information
2. Depth
3. Transmitter temperature
4. Battery status
5. Position (x,y)

6. Azimuth, where direct overhead readings (walkover) are not possible (i.e. sub aqueous)

B. Ensure proper calibration of all equipment before commencing directional drilling operation.

C. Prepare the Driller's Log. Take and record alignment readings or plot points such that elevations on top of and offset dimensions from the center of the product to a permanent fixed feature are provided. Such permanent fixed feature must have prior approval of the City. Provide elevations and dimensions at all bore alignment corrections (vertical and horizontal) with a minimum distance between points of 10 feet. Provide a sufficient number of elevations and offset distances to accurately plot the vertical and horizontal alignment of the installed product.

13.10 PRODUCT BORE HOLE DIAMETER

Minimize potential damage from soil displacement/settlement by limiting the ratio of the bore hole to the product size. The size of the back reamer bit or pilot bit, if no back reaming is required, will be limited relative to the product diameter to be installed as follows:

Table 2-1. Recommended Relationship between Product Diameter and Reamed Diameter

Product Diameter	Reamed Diameter
< 8"	Diameter of product + 4"
8" – 24"	Diameter of product x 1.5
> 24"	Diameter of product + 12"
*Horizontal Directional Drilling Good Practices Guidelines – HDD Consortium	

13.11 EQUIPMENT REQUIREMENTS

A. The HDD equipment selected by the Contractor shall be capable of drilling, steering, tracking, reaming and installing the pipeline through all the subsurface conditions that may be present at the site.

B. Match equipment to the size of pipe being installed. Obtain the City's review and acceptance for installations differing from the above chart. Ensure that the drill rod can meet the bend radius required for the proposed installation.

C. All HDD equipment shall have an electronic data logger to record pull back force during all pipe installations.

D. All HDD equipment that has the capability to exceed the maximum recommended pulling force shall have a breakaway swivel properly attached to the product pipe that will release if the pullback force exceeds the pipe manufacturer's recommended pulling force.

13.12 THRUST / PULLBACK REQUIREMENTS

The Contractor shall provide as part of the required working drawings submittal complete data regarding the operational and maximum thrust or pulling forces to be used for the initial drill head and back-reamer installations, and the final pull-back of the pipe. Gages or other measurement tools shall be used to monitor the forces being used.

13.13 INSTALLATION PROCESS

A. Contractor shall contact the City and Engineer at least forty-eight (48) hours before each of the following activities:
   1. The setup of a drill rig pit,
   2. The start of the pilot bore,
   3. The pull back of the product pipe. Upon completion of the pilot-hole phase of the operation, a complete set of as-built records shall be submitted in duplicate to the Engineer. These records shall include copies of the plan and profile drawing, as well as directional readings recorded during the drilling operation.

B. Ensure adequate removal of soil cuttings and stability of the bore hole by monitoring the drilling fluids such as the pumping rate, pressures, viscosity and density during the pilot bore, back reaming and pipe installation. Relief holes can be used as necessary to relieve excess pressure down hole. Obtain the City's review and acceptance of the location and all conditions necessary to construct relief holes to ensure the proper disposition of drilling fluids is maintained and unnecessary inconvenience is minimized to other facility users.

C. At all times during the pilot bore the Contractor shall provide and maintain a bore tracking system that is capable of accurately locating the position of the drill head in the x, y, and z axes. The Contractor shall record these data at least twice per drill pipe length or every fifteen (15) feet, whichever is more frequent.

   1. Contractor shall monitor and record x, y, and z coordinates relative to an established surface survey benchmark, from downhole survey data using downhole wireline system. "Tru-Tracker" energized surface grid, or equivalent, shall be installed and used to supplement the wireline system. The "Tru-Tracker" grid shall encompass the entire area of the bore including underwater across the water. Alternatively, the Contractor may propose fixed "TruTracker" grids on land outside the waterway, supplemented by moveable grids on floating templates that can be temporarily anchored and surveyed while drilling the pilot hole. The moveable template should be sufficiently large to encompass the active drilling area for a two hour drilling period and should be at least as wide as the maximum depth of the bore. The grids shall be surveyed to establish horizontal and vertical position to 0.1 feet accuracy. The data shall be continuously monitored and recorded at least twice per drill pipe length or every fifteen (15) feet, whichever is most frequent.

   2. Deviations between the recorded and design bore path shall be calculated and reported on the daily log. If the deviations exceed tolerances specified

elsewhere, such occurrences shall be reported immediately to the City and Engineer. The Contractor shall undertake all necessary measures to correct deviations and return to design line and grade.

3. Drilling fluid pressures and flow rates shall be continuously monitored and recorded by the Contractor. The pressures shall be monitored at the pump and within the annular space with a downhole pressure-sensing tool located within thirty (30) feet of the drilling head.

4. Maximum allowable drilling speeds shall be calculated by the Contractor for pilot boring and each reaming pass and shall not be exceeded for pilot boring or reaming passes. Measurements shall be taken every fifteen (15) feet.

5. The Contractor shall measure and record drilling fluid viscosity and density at least three times per shift with at least two hours between readings, using calibrated Marsh funnel and mud balance. These measurements shall be included in daily logs submitted to the Engineer. The Contractor shall document modifications to the drilling fluids, by noting the types and quantities of drilling fluid additives and the dates and times when introduced. The reason for the addition of drilling fluid additives or other modifications shall be documented and reported.

6. The Contractor shall measure and record the pH on a regular basis (three times per shift with at least two hours between readings) with pH strips, paper or a pH meter.

7. The drilling fluid report shall include desired mud properties including weight, viscosity in cP, yield point in lb/100 sf, measured mud weight, funnel viscosity, plastic viscosity, fluid loss, % solids, chlorides, and detailed log of type and quantity of bentonite and all additives.

8. The Contractor shall constantly monitor and record the circulating volume, particularly for the early detection of drilling fluid losses, or thinning, or the danger of borehole collapse. Ground upheavals can also be detected early from such differences, and necessary action can be implemented to prevent further damage.

9. The Contractor shall constantly monitor and record the solid (sand) content to assure there is no significant increase, which can diversely impact efficiency of the circulations system.

D. The Contractor shall determine the pull-back rate in order to allow the removal of soil cuttings without building excess down-hole pressure and to avoid local heaving, or spills. Contain excess drilling fluids at entry and exit points until they are recycled and separated from excavated materials or removed from the site or vacuumed during drilling operations. Ensure that entry and exit pits and storage tanks are of sufficient size to contain the expected return of drilling fluids and soil cuttings. The bored hole shall always be maintained full of drilling fluids for support of surfaces, and the fluid re-circulation equipment shall operate continuously until the pipe installation is completed

and accepted by the City.

E. Ensure that all drilling fluids are disposed of or recycled in a manner acceptable to the appropriate local, state, or federal regulatory agencies. When drilling in suspected contaminated ground, test the drilling fluid for contamination and appropriately dispose of it. Remove any excess material upon completion of the bore. If in the drilling process it becomes evident that the soil is contaminated, contact the City immediately. Do not continue drilling without the City's approval.

F. The timing of all boring processes is critical. Install a product into a bore hole within the same day that the pre-bore is completed to ensure necessary support exists. Once pullback operations have commenced, the operation shall continue without interruption until the pipe is completely pulled into the borehole.

G. All prepared pipe that is being used for installation shall be adequately supported off the ground along the entire length to avoid damaging of the material during pullback due to ground surface conditions. Surface cuts or scratches greater than or equal to the maximum defect depth are not acceptable.

Pipe Size In.	Max. Defect Depth In.
4	1/16
6	1/11
8	5/32
10	3/16
12	1/4
> 12	Per Pipe Manufacturer's Recommendations

H. The drilling fluid specialist shall remain on the project site during the entirety of the directional boring operation to ensure proper mixture and production of drilling fluids needed for the bore.

I. Upon successful completion of the pilot hole, the borehole shall be reamed to a minimum of 25 percent greater than the outside diameter of the pipe being installed.

J. For bores with more than two radii of curvature (entrance and exit), the borehole should be reamed up to 50 percent larger than the outside diameter of the carrier pipe. Prereaming may be necessary dependent on size of material to be pulled.

K. Additional passes for prereaming may be required for larger pipe. Incremental increases shall be used as needed until appropriate bore hole size has been achieved.

L. Prereaming must be accomplished with no product attached to the reamer head on all bore pipe 6-inches and larger. The bore product may be pulled back on final pass of prereaming upon prior approval from the City.

M. After reaming the borehole to the required diameter, the pipe shall be pulled through the hole. In front of the pipe shall be a breakaway swivel and barrel reamer to compact the borehole walls.

N. The Contractor shall not ream at a rate greater than the drilling equipment and drilling fluid system are designed to safely handle.

O. Install all piping such that their location can be readily determined by electronic designation (tracer wire) after installation.

1. For all pipe installations, externally attach two (2) tracer wires; to the top of product pipe and secure in place with duct tape or 10-mil thickness polyethylene pressure sensitive tape at every joint and at 5 foot intervals.

P. Connect any break in the conductor line before construction with an electrical clamp, or solder, and coat the connection with a rubber or plastic insulator to maintain the integrity of the connection from corrosion. Clamp connections must be made of brass or copper and of the butt end type with wires secured by compression. Soldered connections must be made by tight spiral winding of each wire around the other with a finished length minimum of 3 inches overlap. Tracking conductors must extend 2 feet beyond bore ends. Test conductors for continuity. Each conductor that passes must be identified as such by removing the last 6 inches of the sheath. No deductions are allowed for failed tracking conductors. Upon completion of the directional bore, the Contractor shall demonstrate to the City that the wire is continuous and unbroken through the entire run of the pipe by providing full signal conductivity (including splices) when energizing for the entire run in the presence of the City Representative. If the wire is broken, the Contractor shall repair or replace it at no additional cost to the City.

Q. The pilot bore shall follow the design path of the bore shown on the Drawings:

1. Horizontal and vertical deviations shall be less than plus or minus three feet from the design path centerline. The Contractor shall continuously monitor horizontal and vertical position and record the position at least twice per drill pipe length, or at fifteen (15) feet intervals, whichever is most frequent.
2. The radius of curvature shall not be less than that shown on the Drawings. The radius of curvature shall be calculated over the distance of three drill pipe sections. If design radius of curvature is exceeded, the Contractor shall re-drill the pilot hole at no extra cost to the contract.
3. The location of the entry and exit points shall be as shown on the Drawings. The Contractor shall be solely responsible for all work necessary to correct excessive deviations from line and grade, including re-drilling, redesigning connections, and acquiring additional easement, at no additional cost to the Owner and without schedule extension.

R. Inadvertent Returns (Frac-Outs) and planned returns (at relief wells):

1. Contractor shall be responsible for avoiding any impact to existing utilities, structures, facilities, pools, and waterways in the Project area during the drilling operation. If the drilling fluid starts leaking to the surface (other than at the entry and exit points or relief wells), or if fluid loss results in surface movement, Contractor shall cease drilling until fluid loss volumes can be brought under control to minimize any inadvertent returns in the Project area. In such event, notify Engineer immediately. The Contractor shall clean up any locations where

drilling fluid surfaces, including releases at relief well locations. Contractor shall pay particular attention to the potential of inadvertent returns washing out along existing utility crossings and shall have preventive measures in place to prevent these occurrences from happening. Contractor shall be fully responsible for all damages caused by the force main installation operations. The pilot bore shall be pre-reamed and reamed using equipment and methods submitted by the Contractor. The Contractor shall completely ream the borehole to the final diameter prior to pull back, when practical or as directed by the Engineer.

O. The Contractor shall perform hydrostatic water pressure test in accordance with the manufacturer's guidelines prior to product pipe pullback.

13.14 PIPELINE TESTING

A. Hydrostatic Testing
   1. Refer to Specifications for pipe material.

B. Mandrel Deflection Testing Process

   1. The deflection test for flexible pipe systems shall be performed by pulling a mandrel through the pipeline. The mandrel shall have a diameter equal to 80 percent of the inside diameter of the pipe system being tested. When the mandrel cannot be pulled through the pipeline the Contractor shall locate and correct the defect to the satisfaction of the City. After the defect is corrected and trench backfilled, the section of line shall then be retested to compliance.

   2. Deflection tests shall be performed not sooner than 24 hours after completion of the pipe pull-back. The Contractor shall take measures to ensure the pipe is clean as not to interfere with the mandrel test.

   3. The mandrel types that can be used are:

      a. a rigid, nonadjustable, odd number of legs (9 legs minimum), mandrel having an effective length not less than its nominal diameter; and to be fabricated of steel, fitted with pulling rings at each end, stamped or engraved on some segment other than a runner indicating the pipe material specification, nominal size and be furnished in a suitable carrying case labeled with the same data as stamped or engraved on the mandrel.

      b. If approved by the City, a smaller diameter piece of similar material that is approximately double the nominal diameter in length and meets the 80% reduction of the inside diameter of the pipe being tested. The pipe length may need to be adjusted to ensure the pipe section cannot become skewed and become lodged; this may cause the test to fail.

   4. The mandrel shall be pulled through the pipe by hand to ensure that maximum allowable deflections have not been exceeded or that "necking" has not occurred. Prior to use, the mandrel shall be inspected by City personnel. Use of an unapproved mandrel or a mandrel altered or modified after inspection will

invalidate the test. If the mandrel fails to pass, the pipe will be deemed over deflected or necked.

5. Over deflected or necked pipe shall be abandoned and reinstalled. The replaced pipe shall be tested for deflection not sooner than 24 hours after installation.

C. The following deficiencies in the flexible pipe system installation shall be corrected by the Contractor at no cost to the City:

1. Over deflections
2. Stretched or “Necked” Pipe
3. Damaged Pipe
4. Improper Pipe Welds
5. Infiltration Points
6. Debris in the line

D. The City will not accept a credit, maintenance bond, or any other form of compensation in lieu of corrective measures that may be required to correct any sections of flexible pipe system that are improperly installed or do not meet the requirements of these specifications. In addition, all corrective measures proposed by the Contractor shall be approved by the City. In addition, should repairs of the flexible pipe system be accomplished by the use of any unauthorized materials or procedure, the City will require replacement of those substandard portions or repairs made to conform to the requirements of these specifications.

END OF SECTION

THIS PAGE INTENTIONALLY LEFT BLANK

SECTION 14 - JACKING AND BORING

14.01 SCOPE OF WORK

The Contractor shall furnish all labor, equipment, materials and incidentals required to install road or railroad crossings as shown on the Contract Drawings and as specified herein.

The Contractor is responsible for verifying the location of all utilities in the ground before commencing the jack and bore operation. No compensation will be allowed for labor or materials for unused casing. The Contractor will be responsible for all damage incurred to roadways or utilities by his operation.

14.02 OPERATIONS IN THE CITY OF ST. PETE BEACH OR STATE OF FLORIDA PROPERTY

All work affecting The City of St. Pete Beach, Florida Department of Transportation (FDOT), any other governmental agency's right-of-way or facilities, or railroad right-of-way shall be carried out to the full satisfaction of the applicable Department's authorized representative. The Contractor shall be responsible to meet any and all requirements of the Department of Transportation, railroad, or other agency pertaining to the specific project and shall conduct all his work accordingly.

Prior to the start of the jacking operation, a detailed jacking plan shall be submitted to the City for review and acceptance. No work shall be permitted until the submittals are accepted.

Prior to construction, a minimum of three (3) working days written notice prior to start of the actual work shall be given to the City and to the FDOT or other applicable agency.

A Bore Path Report shall be submitted with in three (3) days of completion of the bore.

The Contractor shall install, maintain and leave in place any sheeting, underpinning, cribbing and other related items (other than that required for the jacking pits) to support any structures or facility on the right-of-way owned by either The City of St. Pete Beach, FDOT or other governmental agency or railroad entity. The Contractor, at his expense, may be directed by FDOT, other applicable agency, or the City, to leave sheeting in place.

The Contractor shall perform all necessary soil test borings to determine actual soil conditions and shall utilize the results of said borings to determine the procedures required for each jack and bore operation, including, but not limited to, the presence of rock and necessary dewatering requirements.

No wires, equipment, or other appurtenances shall be permitted to be placed across or pass across State property without the express written permission of FDOT’s authorized representative.

All equipment used by the Contractor on State property may be inspected by the State and shall not be used if it is deemed unsatisfactory by an authorized State representative. State

highways shall be kept free of obstructions at all times.

No blasting shall be permitted under or adjacent to any State highways.

The Contractor shall be responsible for all damages arising from his negligence or failure to comply with any State or The City of St. Pete Beach regulations or requirements or deviations from the Contract Documents.

All State highway crossings shall be performed and completed in a manner fully satisfactory to the Department of Transportation and The City of St. Pete Beach.

14.03 SHOP DRAWINGS

The Contractor shall furnish working drawings showing all fabrication and construction details for the jacked crossings.

14.04 SUBMITTALS

Contractor shall submit a Jacking Plan that includes the following:

1. Site layout plan for entry and exit pit locations, drawn to scale, depicting the position of all required equipment, access points, existing facilities to remain in place, existing traffic lanes to be maintained in operation, and storage sites.
2. Qualification information on jack/bore contractor.
3. Manufacturer's information on equipment to be used.
4. Methods and materials for retaining walls for jacking and receiving pits.
5. Bore Report that details final alignment, dimensions, and record documentation.

14.05 CASING PIPE

All casings shall be installed accurately to line and grade and shall meet all requirements of the prevailing rights-of-way holder. Casings shall be new and of domestic material and manufacture.

Pipe casing shall be welded steel conforming to the requirements of AWWA C200 and ASTM A-139,Grade B. The pipe shall be coated internally and externally with Tnemec 46H-413 Hi-Build Tneme-tar per manufacturer's recommendations.

Joints shall be full penetration butt welded in accordance with the requirements of AWWA C206. The joints shall be double groove welded with continuous circumferential welds and field lined and coated in accordance with AWWA C203.

All casings shall be in conformance with the specifications as shown on the plans and detail sheets.

14.06 CARRIER PIPE

All carrier pipe shall be Class 50 ductile iron pipe with joint restraints or fully restrained PVC pipe.

14.07 CASING SPACERS

The carrier pipe shall be installed in the casing on spacer skids. The supports shall be dimensioned to center the carrier pipe in the casing with a top clearance of one-half inch. The height of the supports and runners combined shall be sufficient to provide not less than three-quarter inch between the casing pipe and outside diameter of the carrier pipe joints.

Adequate casing spacers shall be provided to properly support the carrier pipe and maintain pipe deflection within the pipe manufacturer's requirements. In any case, not less than three spacers for each individual length of carrier pipe shall be provided.

For metallic casing spacers, bolts, nuts, and washers shall be 316 stainless steel. Shell shall be min. 14 gauge 304 stainless steel. Risers shall be min. 10 gauge 304 stainless steel.

For metallic casing spacers, each shell shall be lined with a min. thickness of 0.090" ribbed PVC/EPDM extrusion with a min. Durometer "A" 85-90 hardness.

For metallic casing spacers, each riser shall have runners (bearing surfaces) made of ultra-high molecular weight polyethylene (UHMWPE) or glass filled polymer plastic to provide abrasion resistance and a low coefficient of friction.

For nonmetallic casing spacers, the runners (bearing surfaces) shall be of a projection type. The projections shall be made of preformed sections of HDPE or virgin polypropylene and shall conform to ISO 9001:2000 for strength and quality. The casing spacers shall be sized in accordance to the manufacturer's recommendations.

14.08 TUNNEL LINER PLATES

Tunnel liner plates shall be asphalt coated galvanized steel plates. The Contractor shall submit plans signed and sealed by a registered Engineer in the State of Florida and written installation procedures with his request for approval.

14.09 CASING END SEALS

Contractor shall provide properly sized rubber end seals to completely close both openings on either side of the casing.

Ends seals shall be pull on (seamless) or wrap around with 316 stainless steel straps for securing to the carrier pipe and the casing.

The seals shall have min. thickness of 1/8 inch of specially compounded synthetic rubber.

14.10 CONSTRUCTION

The Contractor shall provide all labor, material, equipment and appurtenances required for jacking the casing pipe beneath the roadway or railroad tracks. The casing pipe shall be welded steel pipe and jacked in one continuous operation at the locations shown on the drawings. Once the operation starts, jacking shall not be discontinued. Proper alignment and elevation of the casing pipe shall be consistently maintained throughout the jacking operation. The casing pipe shall be installed by jacking and to the length shown on the plans.

The installation of the casing and boring at the head of the casing shall be one simultaneously. Track guides of sufficient length to carry the power unit and pipe installation shall be used, in order to maintain proper line and grade of the casing. Surplus and unsuitable excavated material shall be disposed of by the Contractor.

The Contractor shall shore the jacking pits with sheeting or such other materials as required. Sheeting shall be driven to a sufficient depth below the invert of the steel casing pipe to resist any pressure developed by the soil outside the jacking pit. Sheeting shall terminate not less than 3-feet, 6-inches above existing grade. The Contractor shall install adequate protective railing or temporary fences around the pits within the crossing right-of-way at all times during construction.

The sections of casing pipe shall be field welded in accordance with the applicable portions of AWWA C206 for field welded water pipe joints. Steel casing pipes shall receive one (1) internal and external coat of Tnemec 46H-413 Hi-Build Tneme-tar applied in accordance with manufacturer's recommendation.

All surfaces shall be smooth and uniform without bulges, dents, or warping of lengths, and only new pipe shall be used. Finished lengths of pipe shall be furnished with beveled cut ends to facilitate proper welding of transverse joints. The diameter and wall thickness of the pipe shown on the drawings is the minimum required and no extra compensation shall be claimed by the Contractor if a larger and thicker pipe is used. It will be the Contractor's responsibility in the event that the casing does buckle or collapse during these operations.

At the completion of the jacking operations, the Contractor shall be required to leave all sheeting in place. The top of the sheeting shall be cut off 36-inches below finished grade.

The Contractor shall be responsible for preventing voids outside the casing pipe. Should they occur, the Contractor may be directed to fill them with grout in a method approved by the City. The Contractor shall exercise care in the sleeve removal to prevent voids.

The Contractor shall be responsible for furnishing, installing and removing the thrust block or restraint which was employed in driving the sleeve forward. No additional payment for the jacking restraint shall be made other than the unit price for this item. The entire jacking operation shall be discussed and accepted by the City prior to commencing jack and bore operation. After completion, the backup structures shall be removed in part or whole to permit construction of the pipeline in the sleeve.

Tunneling for the installation of large carrier pipe may be substituted for jacking and boring

when approved by the Engineer.

14.11 INSTALLING CARRIER PIPE IN CASING PIPE

The Contractor shall install the carrier pipe in full conformity with the Contract Documents. The pipe shall be installed to the lines and grades required within the casing pipe and placed to the acceptance of the City. The carrier pipe shall be braced to the side and the top of the casing pipe to prevent flotation or motion.

A bulkhead or rubber end seals shall be placed at each end of the casing pipe to keep the surrounding soil and material from migrating into the voids of the casing pipe.

14.12 TESTING

The pipe shall be tested as provided in the Contract Documents.

END OF SECTION

THIS PAGE INTENTIONALLY LEFT BLANK

SECTION 15 - FLUSHING, TESTING AND DISINFECTION

15.01 SCOPE OF WORK

A. Flushing, Pressure Testing, and Disinfection of systems including, but not limited to, the pipelines shown in the Contract Documents.

B. Contractor shall furnish all necessary pumps, hoses, piping, fittings, meters, gauges, chemicals and labor to conduct specified testing.

C. Testing shall be repeated at the Contractor's expense until satisfactory results are achieved.

15.02 REFERENCES

A. AWWA C651 - Standard for Disinfecting Water Mains.

B. UNI-B-6 - Recommended Practice for Low-Pressure Air Testing of Installed Sewer Pipe

C. ASTM F1417 - Standard Test Method for Installation Acceptance of Plastic Gravity Sewer Lines Using Low-Pressure Air

D. AWWA C600 – Standards for Installation of Ductile-Iron Water Mains and Their Appurtenances.

E. AWWA C605 - Standard for Underground Installation of Polyvinyl Chloride (PVC) Pressure Pipe and Fittings for Water.

F. ASTM 2164 - Standard Practice for Field Leak Testing of Polyethylene (PE) and Crosslinked Polyethylene (PEX) Pressure Piping Systems Using Hydrostatic Pressure

15.03 SUBMITTALS

A. Test Reports: Indicate results comparative to specified requirements. Submit two (2) copies of test results to Engineer in accordance with Submittal specifications.

B. Final approval of the bacterial samples shall be received from the Florida Department of Environmental Protection prior to the time that the system is placed into operation. Sampling procedures shall be done in accordance with FDEP requirements.

C. Bacteriological sampling locations shall meet FDEP requirements and be taken where shown on the drawings and as directed by the Engineer at no additional cost to Owner. Costs for all bacteriological testing shall be borne by the Contractor.

15.04 QUALITY ASSURANCE

A. Perform Work in accordance with these specifications, applicable utility provider standards, and the applicable reference standards listed in Section 1.03 above.

15.05 REGULATORY REQUIREMENTS

A. Conform to applicable FDEP requirements for performing the work of this Section.

15.06 DISINFECTION CHEMICALS

A. Chemicals: The disinfecting agent shall be sodium hypochlorite solution ANSI/AWWA B303 or liquid chlorine ANSI/AWWA B301. Dry hypochlorite, similar to "HTH" or equal may also be used as the disinfecting agent. Bleach or Clorox is not acceptable.

15.07 FLUSHING AND PRESSURE TESTING - PIPING

The Contractor shall furnish and install suitable temporary testing plugs or caps for the water lines, all necessary pressure pumps, hose, pipe connections, meters, gauges and other similar equipment, and all labor required, all without additional compensation for conducting pressure and leakage tests and flushing of the new water lines. Flushing and pressure testing shall be conducted in the following order:

A. After all piping lines have been installed and before pressure testing and final connections to equipment, each run of pipe shall be thoroughly flushed so as to remove all debris and foreign matter from the piping and equipment. Clean and flush all piping using potable water. Cleaning and Flushing shall be achieved by pigging with two (2) polyurethane foam pigs as manufactured by Girard Poly-Pig Inc. or "an approved equal". For watermain installation, the Contractor must ensure that there will be no contaminated water re-entering the main where the pig is flushed out, or it will be re-pigged at the Contractor's expense. Each pig will run through the line prior to running the second pig. On short runs (100 feet or less), or small lines (less than 4"), cleaning shall be accomplished by flushing with a minimum velocity of 2.5 feet per second. Contractor shall furnish and install required pig launch and exit assemblies. Non-abrasive pigs shall be employed. Flushed water may be discharged to the closest public catch basins and be coordinated with the City. Contractor to provide means of discharging water to catch basins at Contractor's expense.

B. Pressure and leakage tests shall be conducted in the presence of the Engineer, or his representative. All pressure mains, fittings, water services, and appurtenances shall undergo pressure and leakage tests. The Contractor will provide all necessary apparatus including a suitable pressure gage, pump, measuring device, piping connections and fittings and the necessary labor to conduct the test. Leakage is defined as the quantity of water added to the pipe being tested during the test period. The Contractor shall submit to the Engineer the testing pattern he proposes to follow prior to testing for the Engineer's approval. The Contractor shall not test more than 1,500 feet of pipe in a single test without approval from the Engineer.

C. In preparation for pressure testing the following parameters must be followed:

1. All air must be vented from the pipeline prior to pressurization. This may be accomplished with the use of the air relief valves or corporation stop valves, vent piping in the testing hardware or end caps, or any other method which adequately allows air to escape the pipeline at all high points. Venting may also be

accomplished by 'flushing' the pipeline in accordance with the parameters and procedures as described in AWWA C600/C605.

2. The pipeline must be fully restrained prior to pressurization. This includes complete installation of all mechanical restraints per the restraint manufacturer's guidelines, whether permanent or temporary to the final installation. This also includes the installation and curing of any and all required thrust blocking. All appurtenances included in the pressure test, including valves, blow-offs, and air-relief valves shall be checked for proper installation and restraint prior to beginning the test.
3. Temporary pipeline alignments that are being tested, such as those that are partially installed in their permanent location shall be configured to minimize the amount of potentially trapped air in the pipeline.

15.07.01 PRESSURE TESTING DUCTILE IRON AND PVC PIPING SYSTEMS:

1. The test pressure for piping constructed of ductile iron and PVC pipe shall be a minimum of 150 psi and this pressure shall be maintained for a period of not less than two hours. Tests shall be made between valves and as far as practicable and as approved by the Engineer. Potable water from the distribution system shall be used. Pressure shall not vary more than five (5) psi for piping during the test periods or as approved by the Engineer. Additionally, allowable leakage shall be computed on the basis of AWWA C-600, C-605 where practical.
2. All leaks evident at the surface shall be uncovered and repaired regardless of the total leakage as indicated by the test, and all pipes, valves and fittings and other materials found defective under the test shall be removed and replaced at the Contractor's expense. Tests shall be repeated until leakage has been reduced below the allowable amount.
3. Should, in the judgment of the Engineer, it not be practical to follow the foregoing procedures exactly for any reason, modifications in the procedure shall be made as approved by the Engineer and the City.

15.07.02 PRESSURE TESTING HDPE PIPING SYSTEMS:

1. The HDPE pipe installed by the directional drill method shall be pressure tested after the entire length is installed.

2. The test pressure for all piping systems shall be a minimum of 150 psi and this pressure shall be maintained for a period of two hours. Testing procedure shall be in accordance with ASTM F2164 and generally as follows.

    a. Take safety precautions as required and as specified in ASTM F2164.
    b. Completely fill pipe with clean water and remove all air from pipe to be tested.
    c. Allow water in pipe to equalize to a common temperature with surrounding ground/groundwater for 24 hours
    d. With air removed and temperature equalized, gradually bring pipe being tested to test pressure plus 10 psi. If test pressure cannot be achieved, discontinue testing and correct fault.

e. Add make-up liquid as required to maintain test pressure plus 10 psi over a 4 hour period.
f. Test Phase - Immediately following the end of the 4 hour period, reduce pressure by 10 psi and monitor pressure for 1 hour. Do not increase pressure or add make up water.
g. Pass/Fail Criteria - If no leakage is observed, and pressure during the test phase remains steady (within 5% of the test pressure) for the 1 hour test phase period, a passing test is indicated.
h. Retesting – If retesting is necessary, depressurize the test section in accordance with ASTM F2164 and correct any faults. Do not attempt to correct any faults while the system is under pressure.
i. Allow the test section to "relax" for at least 8 hours before re-pressurizing. After the relaxation period, repeat the initial expansion and test phases as described above.
j. All leaks shall be repaired regardless of the total leakage as indicated by the test, and all pipes, valves and fittings and other materials found defective under the test shall be removed and re placed at the Contractor's expense. Tests shall be repeated until leakage has been reduced below the allowable amount.
k. All visible leaks shall be repaired regardless of the total leakage as indicated by the test, and all pipes, valves and fittings and other materials found defective under the test shall be removed and replaced at the Contractor's expense. Tests shall be repeated until leakage has been reduced below the allowable amount.
l. Should, in the judgment of the Engineer, it not be practical to follow the foregoing procedures exactly for any reason, modifications in the procedure shall be made as approved by the Engineer. In any event, the Contractor shall be responsible for the ultimate tightness of the watermain within the preceding requirements.

15.07.03 PRESSURE TESTING FUSIBLE PVC SYSTEMS:

1. Fusible PVC pipe installed by the directional drill method shall be pressure tested after the entire length is installed.

2. The test pressure for the water piping constructed fusible PVC pipe shall be a minimum of 150 psi. This pressure shall be maintained for a period of not less than two hours. Tests shall be made between valves and as far as practicable and as approved by the Engineer. Potable water from the distribution system shall be used. Pressure shall not vary more than five (5) psi for piping during the test periods or as approved by the Engineer. Additionally, allowable leakage shall be computed on the basis of AWWA C-600, C-605 where practical.

3. All leaks evident at the surface shall be uncovered and repaired regardless of the total leakage as indicated by the test, and all pipes, valves and fittings and other materials found defective under the test shall be removed and replaced at the Contractor's expense. Tests shall be repeated until leakage has been reduced below the allowable amount.

4. Should, in the judgment of the Engineer, it not be practical to follow the foregoing procedures exactly for any reason, modifications in the procedure shall be made as approved by the Engineer and the City. In any event, the Contractor shall be responsible for the ultimate water tightness of the piping within the preceding requirements

15.07.04 LEAKAGE TESTING FOR NON-PRESSURE PIPING

A. Gravity sanitary sewers need to be tested for leakage.

B. Gravity sanitary sewer leakage testing may include appropriate water or low pressure air testing. The leakage outward or inward (exfiltration or infiltration) shall not exceed 25 gallons per inch of pipe diameter per mile per day for any section of the system. An exfiltration or infiltration test shall be performed with a minimum positive head of two feet. The air test, if used, shall be conducted in accordance with one of the following Standards:

1. ASTM F1417
2. UNI-B-6

C. The testing method selected shall properly consider the existing groundwater elevations during the test.

15.07.05 DEFLECTION TESTING FOR NON-PRESSURE PIPING

D. After completion of the backfill, the engineer or owner may require that a deflection test be performed.

E. Deflection tests should be conducted using a go/no-go mandrel. The mandrel's outside dimension shall be sized to permit no more than 7.5 percent deflection. The percent deflection shall be established from the base inside diameter of the pipe. If the internal beading of the fused joints for the pipe is not required to be removed, the mandrel shall account for this clearance as well. The mandrel shall be approved by the owner or engineer prior to use. Lines that permit safe entry may allow other deflection test options, such as direct measurements.

15.08 DISINFECTION FOR WATER MAIN INSTALLATION

A. The Contractor shall furnish and install suitable temporary connections to the piping, all necessary pressure pumps, hose, pipe connections, meters, gauges and other similar equipment, and all labor required, all without additional compensation for the disinfection of all required potable water piping systems. Disinfection shall be in accordance with the City. If no standards exist, disinfection shall be conducted on the following systems in the following manner:

1. All relocated and new potable water and private fire line piping.

B. Conform to AWWA Standards and as modified herein.

C. Maintain disinfectant for a minimum of 8 hours in such a manner that the entire system will be filled with water containing a minimum chlorine concentration of 50 ppm at any point.

D. After the disinfecting agents have been permitted to remain for the specified contact periods, the water lines, and valves shall be thoroughly flushed with water until the residual chlorine tests are less than 4 PPM in each instance. The determination of the amount of residual chlorine in the system shall be made at such points and in accord with standard tests by means of a standard orthotolodine test set.

E. Replace permanent system devices removed for disinfection.

15.09 BACTERIOLOGICAL SAMPLING FOR WATER MAIN INSTALLATION

A. It shall be the responsibility of the Contractor under this contract to perform the bacteriological testing required by the Florida Department of Environmental Protection and the City to obtain clearance of all piping. The Contractor shall be responsible to disinfect and repeat testing as needed until clearance is obtained for all required systems. The Contractor shall be responsible to pay for additional water needed if the bacteriological testing must be repeated.

B. The piping requires two (2) passing consecutive daily samples taken from the locations called out on the plans or as determined by the Engineer. The samples shall be taken concurrently at all the respective sample point locations.

C. Sampling must be coordinated with Engineer and other construction activities so as to minimize re-sampling.

D. Contractor shall submit schedule for bacteriological testing and pressure tests.

E. The Contractor shall incur all costs needed to provide bacteriological clearance of the piping systems.

F. If repeated tests of such samples show the presence of coliform organisms, the disinfection shall be repeated until tests indicate an absence of contamination.

15.10 QUALITY CONTROL

A. The laboratory and personnel collecting bacteriological samples shall be Florida State certified in accordance with FDEP requirements.

15.11 CONNECTIONS TO EXISTING MAINS

A. The Contractor shall make connections to existing mains as shown on the drawings only after the new mains have passed their pressure and leakage test and completed the disinfection and bacteriological clearance procedures as required.

END OF SECTION

SECTION 16 - SANITARY SEWER BYPASS PUMPING

16.01 SCOPE OF WORK

The Contractor shall furnish all labor, materials, equipment and incidentals required to maintain existing and anticipated flows within the affected portion of the collection system throughout the construction period.

16.02 PUBLIC IMPACTS

The contractor shall not create a public nuisance due to excessive noise or dust, nor impact the public with flooding of adjacent lands, discharge of raw sewage, or release of other potential hazards, nor shall he encroach on or limit access to adjacent lands. No extra charge may be made for increased costs to the contractor due to any of the above.

16.03 SUBMITTALS

The Contractor shall, within 30 days of the date of the Notice to Proceed, submit to the Project Manager a detailed Bypass Pumping Plan for each site by-pass pumping will be needed. The Bypass Pumping Plan shall address all measures and systems to prevent a sanitary sewer overflow (SSO) as defined by the EPA. The Plan shall include as a minimum:

A. Working drawings and sketches showing work location, pump location, piping layout & routing. Show all proposed encroachment and access impacts on adjacent properties or facilities.
B. Pump, control, alarm and pipe specifications or catalog cuts. Detailed sketch of controls and alarm system.
C. Power requirements and details on methods to provide by-pass power or fueling.
D. Calculation and determination of response times to prevent an SSO after a high-water alarm.
E. Procedures to be taken in case of power, pump, or piping failures; including contact names and numbers for emergency notifications.
F. Frequency and specific responsibility for monitoring pump operation, fuel levels, pump maintenance and entire length of piping.

16.04 EQUIPMENT

A. Pumps:

1. By-pass pumping system shall consist of at least a primary pump and a backup pump. Each pump shall have a minimum pumping capacity of 150% of the anticipated peak flows. When bypassing a pump station, 150% of the lift station capacity (G.P.M. & T.D.H) shall be provided.
2. Pumps shall be low noise or sound attenuated. The noise level at any operating condition, in any direction, shall not exceed 70dBA at a distance of twenty-three (23) feet (7 meters) from the pump and/or power source.

B. Controls:

The by-pass pump system shall be equipped with automatic controls and an alarm system. The automatic controls will automatically start the backup pump in the event of a high-water condition or failure of the primary pump. The alarm system will immediately notify the Contractor of a pump failure or high-water condition.

C. Pipe:

Pipe shall be of adequate size and capacity to match the pumps. Pipe type and materials will depend on the particulars of the site conditions and shall be detailed in the Bypass Pumping Plan. Contractor will provide all connections.

16.05 SITE CONDITIONS

Site conditions will vary by site. Contractor is responsible to determine and address requirements such as traffic control, excavation, connections & fittings, impacts on access to adjacent properties, routing and support of by-pass piping, etc., in the Bypass Pumping Plan.

16.06 ON-SITE MONITORING

A. The Contractor shall have personnel experienced with the pumps and controls on site within the calculated response time to prevent an SSO after a high-water alarm.

B. During by-pass operations, the Contractor shall have posted on site with the permit, a copy of the approved Plan and the name and 24-hour contact number of the primary response person, the job site superintendent, and the construction company owner.

16.07 OPERATIONS

A. The Contractor is responsible for securing and providing power, fuel, site security, traffic control and all other supplies, materials and permits required for the by-pass pumping.

B. Contractor shall demonstrate automatic pump switching and alarm system to the satisfaction of the City of St. Pete Beach, prior to beginning by-pass pumping.

Satisfactory demonstration shall be documented by the engineer's, PM's or the City's dated signature on the posted copy of the approved Bypass Pumping Plan.

16.08 DAMAGE RESTORATION & REMEDIATION

A. The Contractor shall be responsible for any pre-pump notifications, all restoration of pre-pump conditions and any damage caused by by-pass operations.

B. Should there be an SSO caused by or as a direct result of the by-pass pumping, the contractor is responsible for all immediate & long term response, notifications, clean up, mitigation, etc. Copies of all written response plans, notifications, documentation, mitigation plans, etc., shall be submitted to the City.

END OF SECTION

THIS PAGE INTENTIONALLY LEFT BLANK

SECTION 17 - VALVES AND APPURTENANCES

17.01 GENERAL

17.01.01 SCOPE OF WORK

The Contractor shall furnish all labor, materials, equipment and incidentals required and install complete and ready for operation all valves and appurtenances as shown on the Contract Drawings and as specified herein.

All valves and appurtenances shall be of the size shown on the Contract Drawings and, to the extent possible, all equipment of the same type on the Project shall be from one manufacturer.

All valves and appurtenances shall have the name of the manufacturer and the working pressure for which they are designed cast in raised letters upon some appropriate part of the body.

All valves shall have a factory applied, fusion bonded epoxy coating on interior and exterior unless noted otherwise in the Contract Drawings or the Specifications.

Any valve, unless otherwise specified, that is removed from the system shall become the property of the Contractor and he shall insure proper disposal.

The equipment shall include, but not be limited to, the following:

1. Gate valves (Sec. 17.03)
2. Pressure Sustaining and Check Valves (Sec. 17.04)
3. Ball Valves for PVC Pipe (Sec. 17.05)
4. Butterfly Valves (Sec. 17.06)
5. Plug Valves (Sec. 17.07)
6. Valve Actuators (Sec. 17.08)
7. Air Release Valves (Sec. 17.09)
8. Valves Boxes (Sec. 17.10)
9. Corporation Cocks (Sec. 17.11)
10. Flange Adapter Couplings (Sec. 17.12)
11. Flexible Couplings (Sec. 17.13)
12. Hose Bibs (Sec. 17.14)
13. Slow Closing Air and Vacuum Valves (Sec. 17.15)
14. Surge Anticipator Valve (Sec. 17.16)
15. Check Valves (Sec. 17.17)
16. Hydrants (Sec. 17.18)
17. Restraining Clamps (Sec. 17.19)
18. Tapping Sleeves and Tapping Valves (Sec. 17.20)
19. Single Acting Altitude Valves (Sec. 17.21)

17.01.02 DESCRIPTION OF SYSTEMS

All of the equipment and materials specified herein are intended to be standard for use in

controlling the flow of potable water, reclaim water, wastewater, etc., depending on the applications.

17.01.03 QUALIFICATIONS

All of the types of valves and appurtenances shall be products of well-established reputable firms who are fully experienced and qualified in the manufacture of the particular equipment to be furnished. The equipment shall be designed, constructed and installed in accordance with the best practices and methods and shall comply with these Specifications as applicable. Valves shall be as covered under mechanical devices in Section 8 of ANSI/NSF Standard 61.

17.01.04 SUBMITTALS

Submittals shall conform to the following:

A. Submit to the City within 30 days after execution of the contract a list of materials to be furnished, the names of the suppliers and the date of delivery of materials to the site.

B. Complete shop drawings of all valves and appurtenances shall be submitted to the City and Engineer for review and acceptance in accordance with the Specifications.

17.02 TOOLS

Special tools, if required for normal operation and maintenance shall be supplied with the equipment.

17.03 GATE VALVES

Gate Valves shall conform to the following:

A. All buried valves shall have cast or ductile iron three (3) piece valve bodies.

B. Where indicated on the Contract Drawings or necessary due to locations, size, or inaccessibility, chain wheel operators shall be furnished with the valves. Such operators shall be designed with adequate strength for the valves with which they are supplied and provide for easy operation of the valve. Chains for valve operators shall be galvanized.

C. Where required, gate valves shall be provided with a box cast in a concrete slab and a box cover. Length of box shall include slab thickness. Box cover opening shall be for valve stem and nut. Valve wrenches and extension stems shall be provided by the manufacturer to actuate the valves. The floor box and cover shall be equal to those manufactured by Rodney Hunt Machine Company, Orange, Massachusetts, Clow, DeZurik or approved equal.

D. Gate valves with 3inch-20inch diameters shall be resilient seated, manufactured to meet or exceed the requirements of AWWA C509 or C515 and UL/FM of latest revision and in accordance with the following specifications. Valves shall have an unobstructed waterway equal to or greater than the full nominal diameter of the valve.

E. Wrench nut shall be provided for operating the valve.

F. Valves shall be suitable for an operating pressure of 200 psi and shall be tested in accordance with AWWA C509 or C515. Mueller, Kennedy, M&H, and Clow are acceptable valves.

G. All bonnet bolts, nuts and studs shall be stainless steel.

17.04 PRESSURE SUSTAINING AND CHECK VALVE

Pressure sustaining and check valves shall conform to the following:

A. Pressure sustaining and check valve shall be pilot operated diaphragm actuated valve with cast iron body, bronze trim, and 125-pound flanged ends. The valve shall be hydraulically operated, diaphragm type globe valve. The main valve shall have a single removable seat and a resilient disc, of rectangular cross section, surrounded on three and a half sides. The stainless-steel stem shall be fully guided at both ends by a bearing in the valve cover, and an integral bearing in the valve seat. It shall be sleeved at both ends with delrin. No external packing glands are permitted and there shall be no pistons operating the main valve or any controls. The valve shall be equipped with isolation cocks to service the pilot system while permitting flow if necessary. Main valve and all pilot controls shall be manufactured in the United States of America. Valve shall be single chamber type, with seat cut to 5 degrees taper.

B. Valve shall maintain a minimum (adjustable) upstream pressure to a preset (adjustable) maximum. The pilot system shall consist of two direct acting, adjustable, spring loaded diaphragm valves.

C. Valve shall be cast iron (ASTM A48) with main valve trim of brass (QQB-B-626) and bronze (ASTM B61). The pilot control valves shall be cast brass (ASTM B62) with 303 stainless steel trim. All ferrous surfaces inside and outside shall have a 2-part epoxy coating. Valve shall be similar in all respects to CLA-VAL Company, Model 692G-01ABKG, as manufactured by CLA-VAL Company, Winter Park, Florida, or similar pressure sustaining and check valve as manufactured by Golden Alderson; or approved equal.

17.05 BALL VALVES FOR PVC PIPE

Ball valves shall conform to the following:

A. Ball valves for PVC pipe shall be of PVC Type 1 with union, socket, threaded or flanged ends as required. Ball valves shall be full port, full flow, all plastic construction, 150 psi rated with Teflon seat seals and T-handles. PVC ball valves shall be as manufactured by Celanese Piping Systems, Inc., Wallace and Tiernan, Inc., Plastiline, Inc., or approved equal.

B. All valves shall be mounted in such a position that valve position indicators are plainly visible when standing on the floor.

17.06 BUTTERFLY VALVES

Butterfly valves shall conform to the following:

A. Butterfly valves shall conform to the AWWA Standard Specifications for Rubber Seated Butterfly Valves, Designated C504, except as hereinafter specified. Valves, except as specified hereinafter, shall be Class 150A or B, except that valves furnished downstream of the high service pumps shall be Class 250 and equal to those manufactured by Henry Pratt Company, DeZurik, Mueller, or approved equal. M&H/Kennedy/Clow are not generally approved equals. Ductile iron conforming to ASTM A536, Grade 65-45-12 shall be provided for all Class 250 valves. All valves shall be leak tested at 200 psi.

B. The face-to-face dimensions of flanged end valves shall be in accordance with Table 1 of above mentioned AWWA Specification for short-body valve. Adequate two-way thrust bearings shall be provided. Flange drilling shall be in accordance with ANSI B16.1.

C. Valve seats shall be an EPDM elastomer. Valve seats 24 inches and larger shall be field adjustable and replaceable without dismounting operator disc or shaft and without removing the valve from the line. All retaining segments and adjusting devices shall be of corrosion resistant material with stainless Nylock screws and be capable of the 1/8-inch adjustment. Valves 20 inches and smaller shall have bonded or mechanically restrained seats as outlined in AWWA C 504. Where the EPDM seat is mounted on the valve body, the mating edge of the valve disc shall be 18-8 stainless steel or Nickel-Chrome, 80-20%. Where the EPDM seat is mounted on the valve disc, the valve body shall be fitted with an 18-8 stainless steel seat offset from the shaft, mechanically restrained and covering 360 degrees of the peripheral opening or seating surface.

D. The valve body shall be constructed of ductile iron or close grain cast iron per ASTM A126, Class B with integrally cast hubs for shaft bearing housings of the through boss-type. Butterfly valves of the "wafer" or "spool" type will not be accepted.

E. The valve shaft shall be turned, ground, and polished constructed of 18-8, ASTM A-276, Type 304 stainless steel and designed for both torsional and shearing stresses when the valve is operated under its greatest dynamic or seating torque. Shaft shall be of either a one-piece unit extending full size through the valve disc and valve bearing or it may be of a stub shaft design. Shaft bearings shall be Teflon or nylon, self-lubricated type.

F. All valves shall be subject to hydrostatic and leakage tests at the point of manufacture. The hydrostatic test for Class 250 valves shall be performed with an internal hydrostatic pressure equal to 500 psi applied to the inside of the valve body of each valve for a period of five minutes. During the hydrostatic test, there shall be no leakage through the metal, the end joints or the valve shaft seal. The leakage test for the Class 250 valves shall be performed at a differential pressure of 230 psi and against both sides of the valve. No adjustment of the valve disc shall be necessary after pressure test for normal operation of valve. The Class 150 valves shall be tested in conformance with AWWA C-504.

G. In general, the butterfly valve operators shall conform to the requirements of Section 3.8 of the AWWA Standard Specifications for Rubber Seated Butterfly Valves, Designation C504, insofar as

applicable, and as herein specified.

H. Gearing for the operators shall be totally enclosed in a gear case in accordance with paragraph 3.8.3 of the above mentioned AWWA Standard Specification.

I. Operators shall be capable of seating and unseating the disc against the full design pressure of velocity, as specified for each class, into a dry system downstream and shall transmit a minimum torque to the valve. Operators shall be rigidly attached to the valve body.

J. The manufacturer shall certify that the required tests on the various materials and on the completed valves have been satisfactory and that the valves conform with all requirements of this Specification and the AWWA standard.

K. Where indicated on the Contract Drawings, extension stems, floor stands, couplings, stem guides, and floor boxes as required shall be furnished and installed.

17.07 PLUG VALVES

Plug valves shall conform to the following:

A. All plug valves shall be eccentric plug valves capable of sustaining 150 psi in either direction without leaking.

Exception: Single direction plug valves may be used if it is clearly demonstrated they will never be required to resist pressure in both directions either in service or during pipe line testing.

B. Plug valves shall be tested in accordance with current AWWA Standard C-504-80 Section 5. Each valve shall be performance tested in accordance with paragraph 5.2 and shall be given a leakage test and hydrostatic test as described in paragraphs 5.3 and 5.4. Plug valves shall be Kennedy or Dezurik.

C. Plug valves shall be of the non-lubricated eccentric type with resilient faced plugs and shall be furnished with end connections as shown on the Contract Drawings. Flanged valves shall be faced and drilled to the ANSI 150 lb. standard. Mechanical joint ends shall be to the AWWA Standard C111-72. Bell ends shall be to the AWWA Standard C100-55 Class B. Screwed ends shall be to the NPT standard.

D. Plug valve bodies shall be of ASTM A126 Class B Semi-steel, 31,000 psi tensile strength minimum in compliance with AWWA Standard C507-73, Section 5.1 and AWWA Standard C504-70 Section 6.4. Port areas for valves 20-inches and smaller shall be full port 100 percent of full pipe area. Valves 24-inch and larger shall have a minimum port area between 80 and 100 percent of full nominal pipe area. All exposed nuts, bolts, springs, washers, etc. shall be zinc or cadmium plated. Resilient plug facings shall be of Hycar or Neoprene.

E. Plug valves shall be furnished with permanently lubricated stainless steel or oil-impregnated bronze upper and lower plug stem bushings. These bearings shall comply with current AWWA Standards.

17.08 VALVE ACTUATORS

17.08.01 GENERAL

A. All valve actuators shall conform to Section 3.8 of the AWWA Standard Specification and shall be either manual or motor operated.

B. Actuators shall be capable of seating and unseating the disc against the full design pressure and velocity, as specified for each class, into a dry system downstream, and shall transmit a minimum torque to the valve. Actuators shall be rigidly attached to the valve body.

C. Butterfly valve actuators shall conform to the requirements of Section 3.8 of the AWWA Standard specifications for Rubber Seated Butterfly Valves, Designated C504, insofar as applicable and as herein specified.

17.08.02 MANUAL ACTUATORS

A. Manual actuators shall have permanently lubricated, totally enclosed gearing with handwheel and gear ratio sized on the basis of actual line pressure and velocities. Actuators shall be equipped with handwheel, position indicator, and mechanical stop-limiting locking devices to prevent over travel of the disc in the open and closed positions. They shall turn counter-clockwise to open valves. Manual actuators shall be of the traveling nut, self-locking type and shall be designed to hold the valve in any intermediate position between fully open and fully closed without creeping or fluttering. Actuators shall be fully enclosed and designed to produce the specified torque with a maximum pull of 80 pounds on the handwheel or chainwheel. Actuator components shall withstand an input of 450 foot pounds for 30-inch and smaller and 300 foot pounds for larger than 30-inch size valves at extreme actuator positions without damage. Valves located above grade shall have handwheel and position indicator, and valves located below grade shall be equipped with a 2-inch square AWWA operating nut located at ground level and cast-iron extension type valve box. Valve actuators shall conform to AWWA C504, latest revision.

17.08.03 MOTOR ACTUATORS (MODULATING)

A. The motor actuated valve controller shall include the motor, actuator unit gearing, limit switch gearing, limit switches, position transmitter which shall transmit a 4-20 mA DC signal, control power transformer, electronic controller which will position the valve based on a remote 4-20 milliamp signal, torque switches, bored and key-wayed drive sleeve for non-rising stem valves, declutch lever and auxiliary handwheel as a self-contained unit.

B. The motor shall be specifically designed for valve actuator service using 480-volt, 60 Hertz, three phase power as shown, on the electrical drawings. The motor shall be sized to provide an output torque and shall be the totally enclosed, non-ventilated type. The power gearing shall consist of helical gears fabricated from heat treated alloy steel forming the first stage of reduction. The second reduction stage shall be a single stage worm gear. The worm shall be of alloy steel with carburized threads hardened and ground for high

efficiency. The worm gear shall be of high tensile strength bronze with hobbed teeth. All power gearing shall be grease lubricated. Ball or roller bearings shall be used throughout. Preference will be given to units having a minimum number of gears and moving parts. Spur gear reduction shall be provided as required.

C. Limit switches and gearing shall be an integral part of the valve control. The limit switch gearing shall be made of bronze and shall be grease lubricated, intermittent type and totally enclosed to prevent dirt and foreign matter from entering the gear train. Limit switches shall be of the adjustable type capable of being adjusted to trip at any point between fully opened valve and fully closed valve.

D. The speed of the actuator shall be the responsibility of the system supplier with regard to hydraulic requirements and response compatibility with other components within the control loop. Each valve controller shall be provided with a minimum of two rotor type gear limit switches, one for opening and one for closing. The rotor type gear limit switch shall have two normally open and two normally closed contacts per rotor. Gear limit switches must be geared to the driving mechanism and in step at all times whether in motor or manual operation. Provision shall be made for two additional rotors as described above, each to have two normally open and two normally closed contacts. Each valve controller shall be equipped with a double torque switch. The torque switch shall be adjustable and will be responsive to load encountered in either direction of travel. It shall operate during the complete cycle without auxiliary relays or devices to protect the valve, should excessive load be met by obstructions in either direction of travel. The torque switch shall be provided with double-pole contacts.

E. A permanently mounted handwheel shall be provided for manual operation. The handwheel shall not rotate during electric operations but must be responsive to manual operation at all times except when being electrically operated. The motor shall not rotate during hand operation nor shall a fused motor prevent manual operation. When in manual operating position, the unit will remain in this position until motor is energized at which time the valve operator will automatically return to electric operation and shall remain in motor position until handwheel operation is desired. This movement from motor operation to handwheel operation shall be accomplished by a positive declutching lever which will disengage the motor and motor gearing mechanically, but not electrically. Hand operation must be reasonably fast. It shall be impossible to place the unit in manual operation when the motor is running. The gear limit switches and torque switches shall be housed in a single easily accessible compartment integral with the power compartment of the valve control. All wiring shall be accessible through this compartment. Stepping motor drives will not be acceptable.

F. The motor with its control module must be capable of continuously modulating over its entire range without interruption by heat protection devices. The system, including the operator and control module must be able to function, without override protection of any kind, down to zero dead zone.

G. All units shall have strip heaters in both the motor and limit switch compartments.

H. The actuator shall be equipped with open-stop-close push buttons, an auto-manual selector switch, and indicating lights, all mounted on the actuator or on a separate locally mounted power control station.

I. The electronics for the electric operator shall be protected against temporary submergence.

J. Actuators shall be Limitorque L120 with Modutronic Control System containing a position transmitter with a 4-20MA output signal or equal.

17.08.04 MOTOR ACTUATORS (OPEN-CLOSE)

A. The electronic motor-driven valve actuator shall include the motor, actuator gearing, limit switch gearing, limit switches, torque switches, fully machined drive sleeve, declutch lever, and auxiliary handwheel as a self-contained unit.

B. The motor shall be specifically designed for valve actuator service and shall be of high torque totally enclosed, nonventilated construction, with motor leads brought into the limit switch compartment without having external piping or conduit box.

a) The motor shall be of sufficient size to open or close the valve against maximum differential pressure when voltage to motor terminals is 10% above or below nominal voltage.
b) The motor shall be prelubricated and all bearings shall be of the anti-friction type.

C. The power gearing shall consist of helical gears fabricated from heat treated steel and worm gearing. The worm shall be carburized and hardened alloy steel with the threads ground after heat treating. The worm gear shall be of alloy bronze accurately cut with a hobbing machine. All power gearing shall be grease lubricated. Ball or roller bearings shall be used throughout.

D. Limit switches and gearing shall be an integral part of the valve actuator. The switches shall be of the adjustable rotor type capable of being adjusted to trip at any point between fully opened valve and fully closed valve. Each valve controller shall be provided with a minimum of two rotor type gear limit switches, one for opening and one for closing (influent valves require additional contacts to allow stopping at an intermediate position). The rotor type gear limit switch shall have two normally open and two normally closed contacts per toro. Additional switches shall be provided if shown on the control and/or instrumentation diagrams. Limit switches shall be geared to the driving mechanism and in step at all times whether in motor or manual operation. Each valve actuator shall be equipped with a double torque switch. The torque switch shall be adjustable and will be responsive to load encountered in either direction of travel. It shall operate during the complete cycle without auxiliary relays or devices to protect the valve should excessive load be met by obstructions in either direction of travel. Travel and thrusts shall be independent of wear in valve disc or seat rings.

E. A permanently mounted handwheel shall be provided for manual operation. The

handwheel shall not rotate during electric operation except when being electrically operated. The motor shall not rotate during hand operation, nor shall a fused motor prevent manual operation. When in manual operating position, the unit will remain in this position until motor is energized at which time the valve actuator will automatically return to electric operation and shall remain in motor position until handwheel operation is desired. Movement from motor operation to handwheel operation shall be accomplished by a positive declutching lever which will disengage the motor and motor gearing mechanically, but not electrically. Hand operation must be reasonably fast. It shall be impossible to place the unit in manual operation when the motor is running.

F. Valve actuators shall be equipped with an integral reversing controller and three phase overload relays, Open-Stop-Close push buttons, local-remote-manual selector switch, control circuit transformer, three-phase thermal overload relays and two pilot lights in a NEMA 4X enclosure. In addition to the above, a close coupled air circuit breaker or disconnect switch shall be mounted and wired to the valve input power terminals for the purpose of disconnecting all underground phase conductors.

G. The valve actuator shall be capable of being controlled locally or remotely via a selector switch integral with the actuator. In addition, an auxiliary dry contact shall be provided for remote position feedback.

H. Valve A.C. motors shall be designed for operation on a 480 volt, 3-phase service. Valve control circuit shall operate from a fuse protected 120-volt power supply.

I. Motor operators shall be as manufactured by Limitorque Corporation, Type L120 or approved equal.

17.09 AIR RELEASE VALVES

The air release valves for use in water or force mains shall be installed as shown on the Contract Drawings. The valves shall have a 316 stainless steel body and cover, 316 stainless steel float, plug, seat ring, and internal mechanism, bronze water diffuser, Buna-N or Viton seat, and 316 stainless steel trim and hardware. The fittings shall be threaded. Back flushing attachments shall be included. The air release valves shall be Figure 942 or 942F as manufactured by VAG/GA Industries or approved equal.

17.10 VALVE BOXES

Valve Boxes shall conform to the following:

A. Buried valves shall have cast-iron three-piece valve boxes or HDPE adjustable valve boxes. Cast iron valve boxes shall be provided with suitable heavy bonnets and shall extend to such elevation at or slightly above the finished grade surface as directed by the City. The barrel shall be two-piece, screw type, having a 5 1/4-inch shaft. The upper section shall have a flange at the bottom with sufficient bearing area to prevent settling and shall be complete with cast iron covers. Covers shall have WATER, SEWER, or RECLAIM, as applicable, cast into the top. Lids will be painted “safety” blue for potable, purple for reclaimed, and green for sanitary sewer.

B. All valves shall have actuating nuts extended to within four (4) feet of the top of the valve box. All valve extensions will have a centering guide plate two (2) inches maximum below the actuating nut. The valve extension shall be fastened to the existing nut with a set screw. Valve boxes shall be provided with a concrete base and a valve nameplate engraved with lettering 1/8-inch deep as shown on the Contract Drawings.

C. HDPE adjustable valve boxes shall be one complete assembled unit composed of the valve box and extension stem. All moving parts of the extension stem shall be enclosed in a housing to prevent contact with the soil. Valve box assembly shall be adjustable to accommodate variable trench depths.

D. The entire assembly shall be made of heavy wall high density polyethylene. All exterior components shall be joined with stainless steel screws. The valve box top section shall be adaptable to fit inside a valve box upper section.

E. The stem assembly shall be of a telescoping design that allows for variable adjustment length. The stem material shall be of plated steel square tubing. The stem assembly shall have a built-in device that keeps the stem assembly from disengaging at its fully extended length. The extension stem must be torque tested to 1000 foot pounds. Covers shall have WATER, SEWER or RECLAIMED clearly and permanently impressed into the top surface.

17.11 CORPORATION COCKS

Corporation cocks for connections to cast-iron, ductile iron or steel piping shall be all brass or bronze suitable for 180 psi operating pressure and similar to Mueller Co. H-10046 or approved equal by Clow Corp. and shall be of sizes required and/or noted on the Contract Drawings.

17.12 FLANGE ADAPTER COUPLINGS

Flange adapter couplings shall be of the size and pressure rating required for each installation and shall be suitable for use on either cast iron or ductile iron pipe. They shall be similar or approved equal to Dresser Company, Style 128. All couplings shall have a sufficient number of factory installed anchor studs to meet or exceed a minimum test pressure rating of 230 psi minimum.

17.13 FLEXIBLE COUPLINGS

A. Flexible couplings shall be either the split type or the sleeve type as shown on the Contract Drawings.

B. Split type coupling shall be used with all interior piping and with exterior piping noted on the Contract Drawings. The couplings shall be mechanical type for radius groove piping. The couplings shall mechanically engage and lock grooved pipe ends in a positive couple and allow for angular deflection and contracting and expansion.

C. Couplings shall consist of malleable iron, ASTM Specification A47, Grade 32510 housing clamps in two or more parts, a single chlorinated butyl composition sealing gasket with a "C" shaped cross-section and internal sealing lips projecting diagonally inward, and two or more oval track head type

bolts with hexagonal heavy nuts conforming to ASTM Specification A 183 and A194 to assemble the housing clamps. Bolts and nuts shall be hot dipped galvanized after fabrication.

D. Victualic type couplings and fittings may be used in lieu of flanged joints. Pipes shall be radius grooved as specified for use with the Victaulic couplings. Flanged adapter connections at fittings, valves, and equipment shall be Victaulic Vic Flange Style 741, equal by Gustin-Bacon Group, Division of Certain-Teed Products, Kansas City, Kansas, or approved equal.

E. Sleeve type couplings shall be used with all buried piping. The couplings shall be of steel and shall be Dresser Style 38 or 40, as shown on the Contract Drawings, or equal. The coupling shall be provided with hot dipped galvanized steel bolts and nuts unless indicated otherwise.

F. All couplings shall be furnished with the pipe stop removed.

G. Couplings shall be provided with gaskets of a composition suitable for exposure to the liquid within the pipe.

H. If the Contractor decides to use victaulic couplings in lieu of flanged joints, he shall be responsible for supplying supports for the joints.

17.14 HOSE BIBS

Hose bibs shall be 3/4-inch or 1-inch brass, polished chromium plated brass, with vacuum breaker as noted on the Contract Drawings.

17.15 SLOW CLOSING AIR AND VACUUM VALVES

A. The Contractor shall furnish and install slow closing air and vacuum valves as shown on the Contract Drawings which shall have two (2) independent valves bolted together. The air and vacuum valve shall have all stainless-steel float, guided on both ends with stainless shafts. The air and vacuum valve seat shall be Buna-N to insure drop tight closure. The Buna-N seat shall be fastened to the cover stainless shoulder screws in a manner to prevent distortion of the seat. The float shall be guided at both ends with stainless steel bushings.

B. The valve cover shall have a male lip designed to fit into the body register for accurate alignment of the float into the Buna-N seat. The valve cover shall have 250-pound class flanged outlet connection.

C. The surge check valve shall be bolted to the inlet of the air and vacuum valve and consist of a body, seat, disc, and compression spring. A surge check unit shall operate on the interphase between the kinetic energy and relative velocity flows of air and water, so that after air passes through, and water rushes into the surge check, the disc starts to close, reducing the rate of flow of water into the air valve by means of throttling orifices in the disc to prevent water hammer in the air valves. The surge check orifices must be adjustable type for regulation in the field to suit operating conditions. Valve shall be rated for 250-pound class working pressure.

D. The complete slow closing air and vacuum valve with air release valve shall have been flow tested in the field, substantiated with test data to show reduction of surge pressure in the valve. Flow test data

shall be submitted with initial shop drawings for review and acceptance.

E. Valve exterior to be painted Red Oxide, Phenolic TT-P86, Primer or approved equal for high resistance to corrosion.

F. All materials of construction shall be certified in writing to conform to ASTM specifications as follows:

Air Valve Cover, Body, and Surge Check Body	Cast Iron	ASTM A48, Class 30
Float	Stainless Steel	ASTM A240
Surge Check Seat and Disc	Stainless Steel	ASTM A582
Air Valve Seat Spring	Buna-N Stainless Steel	T302

17.16 SURGE ANTICIPATOR VALVES

A. Surge anticipator valves shall be furnished for the pumping systems as shown on the Contract Drawings. The valve shall be hydraulically operated, pilot controlled, and diaphragm or piston actuated. The main valve shall be cast iron conforming to ASTM A48 with bronze trim conforming to ASTM B61 and flanged ends conforming to ANSI B161.1. The main valve shall be globe type with a single removable seat and a resilient disc.

B. The diaphragm actuated valve shall have a stainless-steel stem guided at both ends by a bearing in the valve cover and an integral bearing surface in the seat. No external packing glands shall be permitted. The valve shall be fully serviceable without removing it from the line. The pilot system shall be of noncorrosive construction and provided with isolation cocks.

C. The piston actuated valve shall operate on the differential piston principle. The valve piston shall be guided on its outside diameter. The valve shall be able to operate in any position and shall be fully serviceable without removing it from the line. The pilot system shall be provided with isolation cocks and be of noncorrosive materials of construction.

D. The valve shall be designed specifically to minimize the effects of water hammer, resulting from power failure at the pumping station, or from normal stopping and starting of pumping operators. The valve shall open hydraulically on a down surge, or low-pressure wave created when the pump stops, remain open during the low-pressure cycle in order to be open when the high-pressure wave returns. The high-pressure pilot shall be adjustable over a 20 to 200 psi range and the low-pressure pilot shall be adjustable over a 15 to 75 psi range. The valve shall be the 250 Class.

17.17 CHECK VALVES

A. Check valves for cast iron and ductile iron pipe lines shall be swing type and shall meet the material requirements of AWWA Specification C508. The valves shall be iron body, bronze mounted, single disc, 175 psi working water pressure and nonshock. Valves shall be as manufactured by Mueller, Clow, Kennedy, or M&H. Valves 8-inch and larger shall be air cushioned to reduce valve slam.

B. When there is no flow through the line, the disc shall hang lightly against its seat in practically a vertical position. When open, the disc shall swing clear of the waterway.

C. Check valves shall have bronze seat and body rings, extended bronze hinge pins and bronze nuts on the bolts of bolted covers. The interior and exterior of the valve body shall have a factory applied fusion bonded or 10 mil 2-part epoxy coating (Protecto 401 or approved equal).

D. Valves shall be so constructed that disc and body seat may easily be removed and replaced without removing the valve from the line. Valves shall be fitted with an extended hinge arm with outside lever and weight. Weights provided and approved by the City shall be installed.

17.18 HYDRANTS

Hydrants shall be AVK Series 2780 Barrel (nostalgic style with stainless steel bolts) American Darling B-84-B or Mueller Super Centurian 250, or approved equal and shall conform to the "Standard Specification for Fire Hydrants for Ordinary Water Works Service", AWWA C502, and UL/FM certified, and shall in addition meet the specific requirements and exceptions which follow:

1. Hydrants shall be according to manufacturer's standard pattern and of standard size and shall have one 4-1/2inch steamer nozzle and two 2-1/2 inch hose nozzles.
2. Hydrant inlet connections shall have mechanical joints for 6 inch ductile-iron pipe.
3. Hydrant valve opening shall have an area at least equal to that area of a 5-1/4 inch minimum diameter circle and be obstructed only by the valve rod. Each hydrant shall be able to deliver 500 gallons minimum through its two 2-1/2 inch hose nozzles when opened together with a loss of not more than 2 psi in the hydrants.
4. Each hydrant shall be designed for installation in a trench that will provide 5-ft. cover.
5. Hydrants shall be hydrostatically tested as specified in AWWA C502.
6. Hydrants shall be rated at 200 psi.
7. All nozzle threads shall be American National Standard.
8. Each nozzle cap shall be provided with a Buna N rubber washer.
9. Hydrants shall be so arranged that the direction of outlets may be turned 90 degrees without interference with the drip mechanism and without the mechanism obstructing the discharge from any outlet.
10. Hydrants must be capable of being extended without removing any operating parts.
11. Hydrants shall have bronze-to-bronze seatings as per AWWA C502-85.
12. Hydrant main valve closure shall be of the compression type opening against the pressure and closing with the pressure. The resilient seat material shall meet the requirements of AWWA C-509 and shall preferably be EPDM Elastomer.
13. Internal and below ground iron parts (bonnet, nozzle section and base) shall have a fusion bonded epoxy coating per AWWA C550. Aboveground external hydrant parts (cap, bonnet and nozzle section) shall be either epoxy coated together with a UV resistant polyester coating or have two shop coats of paint per AWWA C502. The lower stand pipe or barrel shall be protected with asphaltic coatings per AWWA C502.
14. Exterior nuts, bolts and washer shall be stainless steel. Bronze nuts may be used below grade.
15. All internal operating parts shall be removable without requiring excavation.

17.19 RESTRAINING CLAMPS

Restraining clamp assemblies as detailed in the Contract Drawings for use at hydrant connections to water mains, or at fittings where shown on the Contract Drawings, shall be as manufactured by American

Cast Iron Pipe, Star Pipe Products, U.S. Pipe; or approved equal.

17.20 TAPPING SLEEVES AND GATE VALVES

Tapping valves shall meet the requirement of AWWA C500. The valves shall be flanged, shall be mechanical joint outlet with non-rising stem, designed for vertical burial and shall open left or counterclockwise. Stuffing boxes shall be the "O-ring" type. Operating nut shall be AWWA Standard 2-inch square for valves 2-inch and up. The valves shall be provided with an overload seat to permit the use of full size cutters. Gaskets shall cover the entire area of flange surfaces and shall be supplied with EPDM wedges up to 30-inch diameter.

Tapping sleeves and saddles shall seal to the pipe by the use of a confined "O" ring gasket and shall be able to withstand a pressure test of 180 psi for one hour with no leakage in accordance with AWWA C110, latest edition. A stainless steel 3/4-inch NPT test plug shall be provided for pressure testing. All bolts joining the two halves shall be stainless steel and shall be included with the sleeve or saddle. Sleeves and saddles shall be protected from corrosion by being fusion applied epoxy coated or be made of 18-8 Type 304 stainless steel. Saddle straps shall be 18-8 Type 304 stainless steel.

17.21 SINGLE ACTING ALTITUDE VALVES

17.21.01 FUNCTION

A. The altitude control valve shall be of the single acting type, closing off tightly when the water reaches the maximum predetermined level in the tank to prevent overflow; and opening to permit replenishing of the tank supply when the water level drops approximately 6-inch to 12-inch below the maximum level.

B. A hand operated valve in the power water line to the top of the piston shall permit adjustment of the speed of valve closing. The tank water level control shall be by means of a diaphragm operated, spring loaded, three-way pilot which directs power water to or from the top of the main valve piston. The three-way pilot shall be of bronze construction. The diaphragm surface exposed to the tank head shall be not less than 57 sq. inches. It shall be possible to adjust the spring above the diaphragm for water level control approximately 20% above or below the factory setting.

17.21.02 DESCRIPTION

A. The main valve shall operate on the differential piston principle such that the area on the underside of the piston is no less than the pipe area on the upper surface of the piston is of a greater area than the underside of the piston.

B. The valve piston shall be guided on its outside diameter by long stroke stationary Vee ports which shall be downstream of the seating surface to minimize the consequences of throttling. Throttling shall be done by the valve Vee ports and not the valve seating surfaces.

C. The valve shall be capable of operating in any position and shall incorporate only one flanged cover at the valve top from which all internal parts shall be accessible. There shall be no

stems, stem guides, or spokes within the waterway. There shall be no springs to assist the valve operation.

17.21.03 CONSTRUCTION

A. The valve body shall be of cast iron ASTM A-126 with flanges conforming to the latest ANSI Standards. The valve shall be extra heavy construction throughout. The valve interior trim shall be bronze B-62 as well as the main valve operation.

B. The valve seals shall be easily renewable while no diaphragm shall be permitted within the main valve body.

C. All controls and piping shall be of non-corrosive construction.

D. A visual valve position indicator shall be provided for observing the valve piston position at any time.

17.21.04 FIGURE NUMBER

The valves shall be the 20-inch Globe type (Fig. 3200-D) as manufactured by GA Industries of Mars, Pennsylvania, or approved equal.

17.22 INSTALLATION

A. All valves and appurtenances shall be installed in the location shown, true to alignment and rigidly supported. Any damage occurring to the above items before they are installed shall be repaired to the satisfaction of the City.

B. After installation, all valves and appurtenances shall be tested at least two hours at the working pressure corresponding to the class of pipe, unless a different test pressure is specified. If any joint proves to be defective, it shall be repaired to the satisfaction of the City.

C. Install all floor boxes, brackets, extension rods, guides, the various types of operators and appurtenances as shown on the Contract Drawings that are in masonry floors or walls, and install concrete inserts for hangers and supports as soon as forms are erected and before concrete is poured. Before setting these items, the Contractor shall check all Contract Documents which have a direct bearing on their location and he shall be responsible for the proper location of these valves and appurtenances during the construction of the structures.

D. Pipe for use with flexible couplings shall have plain ends as specified in the respective pipe sections.

E. Flanged joints shall be made with high strength, low alloy Corten bolts, nuts and washers. Mechanical joints shall be made with mild corrosion resistant alloy steel bolts and nuts. All exposed bolts shall be painted the same color as the pipe. All buried bolts and nuts shall be heavily coated with two (2) coats of bituminous paint comparable to Inertol No. 66 Special Heavy.

F. Prior to assembly of split couplings, the grooves as well as other parts shall be thoroughly cleaned.

The ends of the pipes and outside of the gaskets shall be moderately coated with petroleum jelly, cup grease, soft soap or graphite paste, and the gasket shall be slipped over one pipe end. After the other pipe has been brought to the correct position, the gasket shall be centered properly over the pipe ends with the lips against the pipes. The housing sections then shall be placed. After the bolts have been inserted, the nuts shall be tightened until the housing sections are firmly in contact, metal-to-metal, without excessive bolt tension.

G. Prior to the installation of sleeve-type couplings, the pipe ends shall be cleaned thoroughly for a distance of 8-inch. Soapy water may be used as a gasket lubricant. A follower and gasket, in that order, shall be slipped over each pipe to a distance of 6-inches from the end.

H. Valve boxes with concrete bases shall be installed as shown on the Contract Drawings. Mechanical joints shall be made in the standard manner. Valve stems shall be vertical in all cases. Place cast iron box over each stem with base bearing on compacted fill and the top flush with final grade. Boxes shall have sufficient bracing to maintain alignment during backfilling. Knobs on cover shall be parallel to pipe. Remove any sand or undesirable fill from valve box.

17.23 HYDRANT INSTALLATION

A. Hydrants shall be set at the locations designated by the City and/or as shown on the Contract Drawings and shall be bedded on a firm foundation. A drainage pit on crushed stone as shown on the Contract Drawings shall be filled with gravel or crushed stone and satisfactorily compacted. During backfilling, additional gravel or crushed stone shall be brought up around and 6-inch over the drain port. Each hydrant shall be set in true vertical alignment and shall be properly braced. Concrete thrust blocks shall be placed between the back of the hydrant inlet and undisturbed soil at the end of the trench. Minimum bearing area shall be as shown on the Contract Drawings. Felt paper shall be placed around the hydrant elbow prior to placing concrete. CARE MUST BE TAKEN TO ENSURE THAT CONCRETE DOES NOT PLUG THE DRAIN PORTS. Concrete used for backing shall be as specified herein.

B. When installations are made under pressure, the flow of water through the existing main shall be maintained at all times. The diameter of the tap shall be a minimum of 2-inch less than the inside diameter of the branch line.

C. The entire operation shall be conducted by workmen thoroughly experienced in the installation of tapping sleeves and valves, and under the supervision of qualified personnel furnished by the manufacturer. The tapping machine shall be furnished by the Contractor if tap is larger than 12-inch in diameter.

D. The Contractor shall determine the locations of the existing main to be tapped to confirm the fact that the proposed position for the tapping sleeve will be satisfactory and no interference will be encountered such as the occurrence of existing utilities or of a joint or fitting at the location proposed for the connection. No tap will be made closer than 30-inch from a pipe joint.

E. Tapping valves shall be set in vertical position and be supplied with a 2-inch square operating nut for valves 2-inch and larger. The valve shall be provided with an oversized seat to permit the use of full sized cutters.

F. Tapping sleeves and valves with boxes shall be set vertically or horizontally as indicated on the Contract Drawings and shall be squarely centered on the main to be tapped. Adequate support shall be provided under the sleeve and valve during the tapping operation. Sleeves shall be no closer than 30-inch from water main joints. Thrust blocks shall be provided behind all tapping sleeves. Proper tamping of supporting earth around and under the valve and sleeve is mandatory. After completing the tap, the valve shall be flushed to ensure that the valve seat is clean.

17.24 SHOP PAINTING

Ferrous surfaces of valves and appurtenances shall receive a coating of rust-inhibitive primer. All pipe connection openings shall be capped to prevent the entry of foreign matter prior to installation.

17.25 FIELD PAINTING

All metal valves and appurtenances specified herein and exposed to view shall be painted according to the Specifications. All above ground potable water main valves shall be painted safety blue.

17.26 INSPECTION AND TESTING

Completed pipe shall be subjected to hydrostatic pressure test for two hours at 180 psi. All leaks shall be repaired and lines retested as approved by the City. Prior to testing, the pipelines shall be supported in an approved manner to prevent movement during tests.

END OF SECTION

THIS PAGE INTENTIONALLY LEFT BLANK

SECTION 18 - SANITARY SEWER CONSTRUCTION

18.01 GENERAL

The Work in this section includes construction of sanitary sewer gravity pipes, force mains, manholes, and appurtenances.

Sanitary Sewers are to be constructed at locations indicated on the Contract Drawings. The City reserves the right, however, to make minor changes in grade and/or alignment as the Work progresses.

All Work shall be fully completed within the established limits as outlined for the various Pay Items listed in the Proposal. It is not the intent of the City to allow additional compensation for obstructions, interferences, or similar contingencies on this Project.

Pipe materials used for gravity sewers shall be subject to the depth limitations indicated in accordance with the Contract Documents.

All force main pipe and fittings shall be furnished and installed in accordance with the applicable requirements of the Technical Specifications sections headed “Piping Materials: Ductile Iron Pipe,” “Piping Materials: PVC Pressure Pipe,” and "Pressure Pipe Construction."

At the ends of the sections where adjoining pipelines have not been completed and are not ready to connect, temporary bulkheads or plugs (as specified herein) approved by the Engineer shall be installed. All such bulkheads or plugs shall be removed when they are no longer needed or when ordered by the Engineer.

All pipelines shall be tested and closed-circuit television video (CCTV) inspected. Any leak or defect shall be repaired and re-televised. Tests shall be conducted in accordance with these Specifications.

PVC pipe for gravity sewers shall be tested for allowable deflection. Tests shall be conducted in accordance with the requirements of these Specifications.

Connections between dissimilar gravity pipe materials or diameters shall be made as specified herein.

Connections between pressure pipes shall be made with solid sleeves as specified herein.

The ends of all new sanitary laterals shall be marked by witness posts or protruding galvanized pipe, as directed by the Engineer. Witness posts shall be 4-inch diameter PVC pipe filled with concrete; 4 to 5 feet of the pipe shall be exposed and wrapped with green tape. The 1-inch diameter galvanized pipe shall protrude 1 inch above grade.

The following Standards are referenced in this section:

ASTM C 12	“Practice for Installing Vitrified Clay Pipe Lines”
ASTM C 76	"Standard Specification for Reinforced Concrete Culvert, Storm Drain, and

	Sewer Pipe"
ASTM C 443	"Standard Specification for Joints for Circular Concrete Sewer and Culvert Pipe, Using Rubber Gaskets"
ASTM C 478	"Standard Specification for Precast Reinforced Concrete Manhole Sections"
ASTM C 1107	"Standard Specification for Packaged Dry, Hydraulic-Cement Grout (NonShrink)"
ASTM D 2321	"Standard Practice for Underground Installation of Thermoplastic Pipe for Sewers and Other Gravity-Flow Applications"
ASTM D 3034	"Standard Specification for Type PSM Poly (Vinyl Chloride) (PVC) Sewer Pipe and Fittings"
ASTM D 3753	"Standard Specification for Glass-Fiber-Reinforced Polyester Manholes"
ASTM F 477	"Standard Specification for Elastomeric Seals (Gaskets) for Joining Plastic Pipe"
ASTM F 679	"Standard Specification for Poly (Vinyl Chloride) (PVC) Large-Diameter Plastic Gravity Sewer Pipe and Fittings"
UNI-B-6-98	"Recommended Practice for Low-Pressure Air Testing of Installed Sewer Pipe" Uni-Bell Plastic Pipe Association, Dallas, Texas

18.02 DATA TO BE SUBMITTED

The Contractor shall submit shop drawings in accordance with the General Conditions, Article 36, for the following materials:

Piping materials
Fittings and couplings
Grouting rings
Pipe-to-manhole connectors
Precast manholes
Fiberglass manholes
Castings
Wall sleeves
Special construction methods
Interior cementitious coating (including applicator's certification from manufacturer)

18.03 MATERIALS

All materials shall be furnished by the Contractor, unless otherwise noted on the Contract Drawings. All materials shall be new and of the best quality available. Materials not specifically specified shall confirm to applicable provisions of the FDOT-SSRBC.

18.03.01 Piping Materials

Sanitary sewer pipe shall either be green in color or shall be white with continuous colored green ink lettering or shall be continuously painted green along the top 1/3 of the pipe with 2-part high-build epoxy-polyamide paint. All sanitary sewers shall be installed accompanied by green-colored metallic identification tape laid 1 foot above the pipe, cut every 10 feet.

A. Ductile iron pipe and fittings for force mains or gravity sewers shall conform to the Technical Specifications section headed "Piping Materials: Ductile Iron Pipe."

B. PVC gravity sewer pipe and fittings 4-inch through 15-inch, intended for non-pressure service, shall comply with ASTM D 3034, Type PSM, with a dimension ratio of 35 and a minimum stiffness of 46 psi; or, at the direction of the Engineer, pipe with a dimension ratio of 26 and a minimum pipe stiffness of 115 psi shall be used. Joints and gaskets shall comply with ASTM F 477. PVC fittings for use on 4-inch through 15-inch PVC pipe shall be Harco Gasketed PVC Sewer Fittings as manufactured by Harrington Corp. or approved equal.

   PVC gravity sewer pipe and fittings 18-inch through 27-inch, intended for non-pressure service, shall comply with ASTM F 679, with T-1 wall thickness and a minimum pipe stiffness of 46 psi. Joints and gaskets shall comply with ASTM F 477.

C. PVC pressure pipe and fittings for force mains or gravity sewers shall conform to the Technical Specifications section headed "Piping Materials: PVC Pressure Pipe." Fittings shall be PVC or ductile iron as specified, as directed by the Engineer.

D. High Density Polyethylene (HDPE) pressure pipe for force mains shall conform to the Technical Specifications section headed “Piping Materials: HDPE Pressure Pipe.”

18.03.02 Other Materials

A. Castings for manholes and cleanouts shall be cast iron of the sizes, shapes, and catalog references shown on the Contract Drawings. Where no reference is made on the Contract Drawings, castings shall be equivalent in quality to those manufactured by U.S. Foundry. Unless otherwise noted, all castings shall be designed for an HS-20 truck loading. Castings shall be marked "Sanitary Sewer."

B. Concrete, reinforcing, and masonry for precast, cast-in-place, or site assembled manholes and structures shall conform to the Technical Specifications section headed "Concrete, Masonry, and Reinforcing Steel."

C. Precast manholes shall be manufactured as specified herein and in accordance with the sizes and details shown on the Contract Drawings, and with the approved shop drawings.

D. Fiberglass Reinforced Polyester (FRP) manholes shall be manufactured in accordance with ASTM D 3753, the sizes and details shown on the Contract Drawings, and the approved shop drawings.

18.04 CONNECTIONS TO EXISTING SANITARY SEWERS

The Contractor shall connect new sanitary sewers to existing sanitary sewers as shown on the Contract Drawings and as specified.

All connections to existing sanitary sewers shall be by Flex-Seal Adjustable Repair Coupling Series MR-ARC with Series 316 stainless steel shear rings as manufactured by Mission Rubber Company

or approved equal. All couplings shall be centered between pipe ends and shall be tightened at both ends by Series 316 stainless steel clamps or approved equal.

The Engineer shall be notified at least 2 working days prior to making final connections. The time at which the connections are to be made shall be subject to acceptance by the Engineer.

18.05 CONSTRUCTION OPERATIONS

Pipes shall be laid in open cut, except when another method, such as jacking, augering, directional drilling, or tunneling, is shown on the Contract Drawings, specified, or ordered. Construction shall adhere to the following:

A. No excavations shall be left open over a weekend. All pavement openings shall be completely repaired within 7 days of opening.

B. Sanitary sewers may be constructed in short tunnels to protect trees, shrubs, and existing surface or subsurface utilities and structures. Short tunnels shall be constructed to the lengths shown on the Contract Drawings, specified, or directed by the Engineer. No separate payment will be made for short tunnels.

C. Temporary fences, where required, shall be "wood and wire fence" or other suitable fencing as approved by the Engineer.

D. During the Work, it will be necessary to install the sanitary sewer under or closely adjacent to existing culverts and other storm and water main facilities. Where so indicated on the Contract Drawings, the Contractor shall remove storm drains to permit construction of the sanitary sewer and shall then reconstruct the storm drain. Where removal and reconstruction are not indicated on the Contract Drawings, the Contractor shall protect all existing storm and water main facilities which are shown on the Contract Drawings or located in the field during the Work.

E. Sewers crossing water mains may be required to be constructed of ductile iron pipe, PVC pressure pipe, or heavy wall PVC pipe (SDR 26) as ordered by the Engineer, to conform to DEP and Pinellas County Public Health Unit requirements.

   Sanitary sewers and service laterals which cross under the new water pipe with less than 18 inches clear vertical separation, or which cross over the new water pipe, shall be replaced with ductile iron pipe or PVC pressure pipe, or heavy wall PVC pipe (SDR 26) for 10 feet on both sides of the new water main, or as directed by the Engineer.

F. All ground surfaces disturbed by the Contractor shall be restored to their original condition in conformance to the Technical Specifications section headed "Surface Restoration."

G. Sanitary sewers shall not be cut or pumped around without an approved sanitary sewer pump-around plan and submittal of same, a minimum of 72 hours prior to implementation, to the Water Resources Department Dispatch, 893-7261. The pump-around plan shall include size of pipes and pumps, and discharge location.

H. It is the responsibility of the Contractor to maintain operation of the existing sewerage facilities during construction and repair work. The Contractor shall be responsible for providing any equipment required to maintain operation of service during construction. Any damage done to any existing sewer pipe or structure is to be immediately repaired to a condition equal to, or better than, its original condition.

I. Cutting ductile iron pipe shall be field cut with a power saw. No impact cutting is permitted. The spigot end of pipe thus cut shall be filed or ground to form a bevel.

J. Cutting PVC sewer pipe may be field cut using hand or power saws in accordance with the manufacturer's recommendations. The raw spigot end thus formed shall be filed to remove gasket damaging burrs and to form a standard bevel.

18.06 MANHOLE CONSTRUCTION

18.06.01 Precast Concrete Manholes

Precast manholes shall be constructed in accordance with the details shown on the Plans. Full shop drawing information including design, materials, fabrication details, and installation methods of the proposed precast manholes shall be submitted to the Engineer as specified.

A. Base slabs for precast manholes 48-inch in diameter shall have a minimum thickness of 8 inches as detailed on the Plans. The diameter of the base slab shall be as detailed on the Plans. Reinforcement shall be placed with 2 inches of concrete cover over the top row of steel. Base slabs for precast manholes shall be cast with the lower manhole section and placed on a level, compacted trench bottom.

B. Riser sections, grade rings, and tops shall comply with ASTM C 478 with the exception that Article No. 11 shall be deleted. Base riser sections shall be provided with preformed pipe holes to fit the connectors. The tops of pipe holes shall not be within 4 inches of the bell or socket portion of the riser.

C. Riser joints shall conform to ASTM C 443, to the manufacturer's recommendations and as shown on the Plans. Riser shall be jointed with rubber, plastic, or preformed bituminous joint sealing compound equal to Ram-Nek as manufactured by K.T. Snyder.

D. Manhole sizes up to 10 feet in depth (invert to bottom of brick adjustment ring) shall be a minimum of 48-inch inside diameter for 18-inch diameter and smaller pipe. Manholes over 10 feet in depth shall be the specified diameter for a minimum of 6 feet above the manhole invert; the remaining portion may, at the Contractor's option, be reduced to 48-inch diameter. In no case shall the manhole diameter be less than that required to adequately enclose the sewer pipe.

E. Tops shall have a minimum opening 24 inches in diameter for pipes 18-inch and smaller and 32-inch minimum for pipes 21-inch and larger, with an 8-inch wide flange at the top. For Type I manholes, only concentric cones are acceptable.

F. Top grades of precast manholes shall be established so that a minimum of 3, but no more than 6, courses of brick are placed under the ring and cover casting.

G. Inverts shall be formed using poured-in-place concrete conforming to the Technical Specifications section headed "Concrete, Masonry and Reinforcing Steel" and shall have a minimum strength of 2500 psi.

H. Drop inlets shall be provided where directed by the Engineer or shown on the Plans, and such drop inlets shall conform to details shown on the Plans.

I. A protective coal tar epoxy coating of Carboline (formerly Kop-Coat) Bitumastic 300-M, or approved equal, shall be applied to the exterior surfaces of manholes. One coat shall be applied to the outside and shall yield a final dry film thickness of 9 mils.

J. A dense and durable concrete lining of 100 percent pure fused calcium-aluminate cementitious lining of SewperCoat PG as manufactured by Kerneos Inc., shall be applied in accordance with manufacturer's recommendations, to all interior surfaces of manholes including walls, benches, flow channels, and inverts. Lining shall have a final minimum thickness of 1/2 inch.

K. Manhole wall penetrations for precast manholes shall be as specified for brick manholes.

L. Pipe-to-manhole connections (for New Precast) shall be made with a flexible watertight connector such as Kwik Seal or PSX: Positive Seal as manufactured by Press-Seal Gasket Corporation, or Kor-N-Seal connectors for pipe sizes up to 15-inch and Kor-N-Seal II connectors for pipe sizes 15-inch through 30-inch as manufactured by NPC Inc. Pipe-to-manhole connection shall be installed by the precaster for new manholes, unless specified otherwise.

18.06.02 Fiberglass Reinforced Polyester (FRP) Manholes

The construction of FRP manholes shall conform to the details on the Plans. Full shop drawing information including design, materials, fabrication details, and installation methods of the proposed fiberglass manholes shall be submitted to the Engineer as specified.

A. FRP manholes shall be a one-piece unit consisting of a watertight base and corbel section with a concentric cone, as manufactured by LF Manufacturing, Containment Solutions, or an approved equal.

B. A minimum wall thickness of 0.318 inch shall be used for 48-inch diameter manholes. A minimum wall thickness of 0.50 inch shall be used for manholes larger than 48-inch diameter. All manholes shall have a U/V inhibitor that is homogeneous with the resin mixture.

C. All FRP manholes shall have a minimum 20-year manufacturer’s warranty against corrosion and structural defects. All FRP manholes shall have a minimum AASHTO HS-20 axle loading.

D. Base Slabs: FRP manhole base slabs shall be precast or cast-in-place concrete and shall conform to the thickness specified in the details on the Plans. Cast-in-place concrete base slab reinforcement shall be placed with 3 inches of concrete cover in accordance with Technical Specifications Section 5 headed "Concrete, Masonry, and Reinforcing Steel" Cast-in-place base slabs for FRP manholes shall be cast in place on a level, compacted bottom.

E. Watertight Bottom: The FRP manhole shall have a resin 'fiber-reinforced bottom and a 2 and 1/2-inch-wide anti-floatation flange as a homogeneous part of the bottom section. The manhole bottom shall be a minimum 1/2-inch thick.

F. For FRP manhole depths greater than 10 feet, the manufacturer shall install a minimum of two 1 and 1/2-inch-deep by 3 and 1/2-inch-wide stiffening ribs. Stiffening ribs shall be completely enclosed with resin fiber-reinforcement.

G. FRP manholes shall be anchored to the cast-in-place concrete base slab with 316 stainless steel Kwik Bolt II Wedge anchors and washers as manufactured by Hilti, or approved equal. The size, number of anchors, and embedment depth shall be as shown on the Plans. The anchors shall be installed a minimum of 1 and 1/2 inches from the outer edge of the anchoring flange and shall be equally spaced around the circumference of the manhole bottom.

H. No fiberglass manhole shall have less than 4 feet clear inside height (measured from invert of bench to finished grade.)

I. Inverts shall be as shown on the Plans. A concrete invert may be formed in the field using poured-in-place concrete conforming to Technical Specifications Section 5 headed "Concrete, Masonry, and Reinforcing Steel" and shall have a minimum strength of 2,500 psi.

J. FRP stub outs shall be installed as shown on the Plans or directed by the Engineer, in accordance with approved shop drawings.

K. Pipe-to-manhole connectors for new manholes shall be installed by the FRP manhole manufacturer, unless specified otherwise. Connections for 4-inch through 15-inch pipe shall be made with a Kor-N-Seal boot as manufactured by NPC Inc., or approved equal, and laminated sleeve, as shown in the details on the Plans. Connections of 18-inch and larger shall be with a Link-Seal connector as manufactured by Pipeline Seal & Insulator Inc., or approved equal, and laminated sleeve as shown on the details on the Plans.

L. Laminated sleeves shall be formed using resin and fiberglass of same type and grade as used in the fabrication of the fiberglass manhole. Laminated sleeves may be factory installed or field installed. Field installation shall be by a manufacturer's certified representative or a Contractor-certified person.

M. All holes cut into the FRP manhole shall be by core methods recommended by the manhole manufacturer. A minimum of 12-inch clear wall between cutouts shall be maintained in all directions for each cored hole.

18.07 LAYING AND JOINTING PIPELINES

18.07.01 General

Ductile iron pipelines, PVC pressure pipelines, and HDPE pressure pipelines for force mains shall be laid and jointed as specified in the Technical Specifications section headed "Pressure Pipe Construction." Retainer glands used for PVC force mains shall be UL listed or FM approved and shall have factory certification for pressures up to 188 psi.

PVC, concrete, and FRPMP gravity pipelines shall be laid in conformance to applicable requirements of ASTM C 12 for concrete pipe, ASTM D 2321 for PVC pipe, and ASTM D 3262 and D 4161 for FRPMP.

18.07.02 Line and Grade

Sewers shall be laid to exact line and grade using approved methods consistent with common practice and approved by the Engineer. All line and grade controls shall be furnished by the Contractor. The line and the grade of the sewer, as well as the location of manholes, and all other appurtenances, shall be as shown on the Plans or, as directed by the Engineer. The grade line as given on the Plans indicates the grade of the invert of the sewer pipe. The trench bottom shall form a solid base for the entire length of pipe and shall be capable of supporting the full weight of the pipe and backfill material. The pipe bells shall not bear against the solid bottom of the ditch. Sewers will be inspected with mirrors at intervals during construction and corrected, if necessary, before backfill.

18.07.03 Pipe

Before the pipe is jointed in the trench, the outside of the spigot end and the inside of the bell shall be thoroughly cleaned, wiped, and brushed out to ensure that no dirt or foreign material gets into the finished line. Each pipe shall be inspected for defects and cracks prior to being lowered into the trench. Any cracked or otherwise rejected pipe shall be immediately removed from the site. All pipeline work must be performed in the presence of the Engineer. When work is not in progress, water shall be kept out of the pipe, and the pipe shall be kept closed by means of a test plug. The spigot end shall be centered on grade into the bell end of the last downstream length of pipe, and properly seated. When seating pipe with a pry, lever, or other approved device, care shall be taken to protect the pipe end from damage. Ends damaged in any manner shall be cause for rejection of the pipe.

18.07.04 Service Connections

Service lateral connections shall conform to the Details and shall be installed as indicated or as directed by the Engineer. The Contractor shall locate and record the exact position of such service lateral connections and include actual data on the As-Built Drawings to be furnished to the City.

In new sewer construction, D.I.P. and PVC service connections shall be made by means of a wye or tee. All joints connected to the wye unit shall remain flexible. Service connections on existing mains shall be made using a sewer saddle approved in the Contract Documents and

Technical Specifications. All new sewer service connections shall have a continuous looped trace wire consisting of one (1) 14-gauge minimum solid copper or one (1) 12- gauge copper clad steel tracer wires taped to the top center of the pipe from the cleanout to the main line and back to the cleanout.

Service pipe for all properties shall be laid to the property line and plugged, as shown on the Standard Details. All ends of service lines shall be marked by a permanent stake and where sidewalks or curbs are located nearby, by a chiseled mark cut in the sidewalk or curb. Service pipe shall have a protective cover of not less forty-two (42) inches under all roads and thirty-six (36) inches at all property lines. Inspection of service pipe shall be made before backfill. Service pipe shall have a visibly good line and grade. Shallow service shall be laid by using a four-foot hand level with proper shim attached to one end.
In cases of extra depth where service pipe cannot be laid on a continuous grade to the property line, the Contractor shall then furnish all materials and construct risers as shown on the Plans. When pipe cannot be adequately supported on undisturbed earth, it shall be supported on a concrete cradle. No payment will be made for concrete required to correct conditions resulting from faulty construction methods or negligence.

Service reconnections require adapters for all joints that will not connect properly with ordinary factory joints. Approved pipe cutting methods shall be used to cut any pipe required for the connection. All cut pipe will be ground and smoothed to remove snags and sharp edges. No mortar or collars shall be used on reconnections unless specifically approved by the Engineer.

18.07.05 Watertight Plugs

Watertight plugs of an approved type shall be installed in the ends of all pipe at times when pipe laying is not in progress or as ordered to prevent any contaminated material or vermin from entering the pipe. Pipelines shall be thoroughly flushed out upon their completion and when directed by the Engineer.

18.07.06 Removal of Existing Pipe

Existing pipe no longer in service that is removed from the system shall be disposed of properly by the Contractor. Openings in manholes, sewer lines, or wye branches remaining in place shall be properly plugged and sealed so as to eliminate any possibility of infiltration at the point of separation. All pieces of broken pipe shall be removed from the trench before backfill operations commence. Backfill of the trench shall be as specified in Technical Specifications Section 6- “Excavation and Backfill”. Inspection of structures remaining in place shall be made before backfill.

18.08 TESTING OF SEWER PIPELINES

18.08.01 Pressure Pipelines

Pressure sanitary sewer pipelines shall be tested in accordance with the applicable requirements of Technical Specifications Section 12 headed "Pressure Pipe Construction." Pressure sanitary sewer pipelines shall not be disinfected.

18.08.02 Gravity Pipelines

Gravity pipelines shall be tested for infiltration, exfiltration, deflection, or low pressure air test, at the Engineer's direction. The Contractor shall provide a closed-circuit television video camera inspection, in the presence of the City (or engineer) for all sanitary sewer pipe repairs and all new sanitary sewer construction. The video tape, CD, or DVD shall include time and date, footage, and audio describing any pipe abnormality; also, a CCTV inspection log shall be provided with each completed inspection. Any sewer pipeline found to be unacceptable by the Engineer shall be corrected, repaired, or replaced as directed by the Engineer, at no additional cost to the City.

1. **Infiltration Test**: Upon completion of a section of sewer line, a test for infiltration shall be conducted as directed by the City Inspector. Dewatering of the line to be tested shall terminate at least 2 days prior to the infiltration test. The maximum infiltration allowed in a 24-hour period shall not exceed 200 gallons per inch of diameter per mile of sewer from any section between successive manholes. If the infiltration exceeds the allowable limits, the line shall be further checked and repaired by the Contractor until the infiltration requirements have been met. If any location indicates concentrated infiltration, such location shall be investigated and corrected regardless of the overall infiltration requirement.

   Groundwater level measuring pipes shall be installed at manholes. The groundwater level shall be measured prior to testing. If the groundwater level is at least 2 feet above the highest section of the work being tested, infiltration methods of measurement shall be used. If there is insufficient groundwater head to perform infiltration testing, exfiltration tests will be made.

2. **Exfiltration Test**: If, in the opinion of the City Inspector, the position of a sewer line is above the normal groundwater table, the Engineer may direct the Contractor to perform an exfiltration test. The maximum allowable exfiltration during a 24-hour period shall not exceed 200 gallons per inch of diameter per mile of sewer from any section between successive manholes. An allowance of an additional 10 percent of gallonage shall be permitted for each additional 2 feet of head over a basic 2-foot minimum internal head.

   The exfiltration test shall be performed by plugging the upstream and downstream manholes of the test section, filling the line with water, and maintaining a minimum of 2 feet head of water in the section of line being tested. The rate of exfiltration shall be calculated from the water level drop in the upstream manhole during the 24-hour test period.

3. **Low pressure air test**: At the direction of the City Inspector or Engineer, each pipeline reach may alternatively be tested with air pressure (minimum 3.5 psi, maximum 5 psi) in accordance with UNI-BELL UNI-B-6-98 “Recommended Practice for Low-Pressure Air Testing of Installed Sewer Pipe.” The system passes the test if the pressure drop due to leakage through the pipe or pipe joints is less than or equal to 0.5 psig over the time period described below.

Minimum time period for a 0.5 psig pressure drop

The time period for the test shall be calculated from UNI-B-6-98 as follows:

T = 28.33 DK,
T = Shortest time, in seconds allowed for the air pressure to drop 0.5 psig,
K = .000419 DL, but not less than 1.0,
D = Nominal pipe diameter in inches, and
L = Length of pipe being tested in feet.

4. **Deflection Test**: Prior to final acceptance of the Project, all PVC pipelines shall be deflection tested. The Contractor or a City-approved test lab shall perform the deflection testing at the expense of the Contractor. The deflection test shall be performed a minimum of 7 days after the base has been compacted and sealed.

   The PVC pipe/soil system has been designed so that the maximum installed deflection does not exceed 5 percent and 7.5 percent of the base inside diameter of the pipe as listed in the following table:

Nominal Size (inches)	Base Inside Diameter (inches)	5% Deflection After 7 Days Mandrel (inches)	7.5% Deflection after 30 Days Mandre (inches)
ASTM D 3034 SDR-35			
8	7.665	7.28	7.09
10	9.563	9.08	8.85
12	11.361	10.79	10.51
15	13.898	13.20	12.86
ASTM F 679 TYPE T-1			
18	16.976	16.13	15.70
21	20.004	19.01	18.50
24	22.480	21.36	20.79
27	25.327	24.06	23.43
ASTM D 3034 SDR-26			
8	7.488	7.11	6.93
10	9.342	8.87	8.64
12	11.102	10.55	10.27
15	13.575	12.90	12.56
ASTM F 679 TYPE T-2			
18	17.054	16.20	15.77
21	20.098	19.09	18.59
24	22.586	21.46	20.89
27	25.446	24.17	23.54

The Contractor shall have the option of testing for 5 percent deflection after the base has been compacted and sealed for 7 days; or for 7 and 1/2 percent deflection after the base has been compacted and sealed for 30 days.

If the pipe fails the 7-day, 5 percent deflection test, the Contractor shall immediately conduct a 7 and 1/2 percent deflection test. If the pipe passes the 7 and 1/2 percent deflection test, the Contractor has the option of repairing that section at that time or waiting until a minimum of 30 days after the base has been compacted and sealed and then re-testing for a maximum of 7 and 1/2 percent deflection.

If the pipe fails the 7 and 1/2 percent deflection test after 7 days or at 30 days, the Contractor shall repair that section immediately.

If the Contractor performs the deflection testing rather than employing a City-approved test lab, the following shall apply:

The Contractor shall furnish the mandrel, labor, materials, and equipment necessary to perform the tests as approved by the Engineer. The mandrel shall be pulled through by hand or a hand operated reel in the presence of the Engineer. Prior to performing the deflection tests, the Contractor shall submit to the Engineer certification that the 9-arm mandrels are preset as stated above. Each mandrel shall be engraved with the following:

- Serial Number
- Nominal Pipe Diameter
- Either “ASTM D 3034,” year and either “SDR-35” or SDR-26” or “ASTM F 679,” year and either “Type T-1” or Type T-2”
- Percent deflection as stated above

If the mandrel fails to pass any section of pipe, the Contractor shall excavate and make all repairs (section replacements) necessary to correct the excessive deflection. The Contractor shall then backfill, recompact, reseal the permanent pavement base, and retest the line. If the mandrel fails to pass a second time, the affected section shall be replaced. Re-rounding shall not be permitted.

18.09 SANITARY SEWER PIPE REPAIRS

The contractor shall furnish all labor and materials to repair sanitary sewer pipelines as specified herein

18.09.01 General

A. The Contractor shall excavate and expose suspected damaged pipeline at general locations described by the County. The pipeline shall be exposed for visual inspection four feet on each side of the damaged area or as directed by the County. The City may authorize replacing bad joint materials (vitrified clay or concrete pipe) or removing and replacing the pipe.

B. Crushed stone shall be used in pipe bedding and to help stabilize trench bottoms. Special attention shall be given to compacting the bedding underneath the pipeline and its haunches.

C. Backfilling of repaired pipe shall proceed only in the presence of the Inspector.

18.09.02 Vitrified Clay Pipe Repairs

A. Repairs to VCP including cracked or crushed pipe, cracked bells, offset joints, holes, etc. shall be accomplished by replacing a section of damaged pipe with a piece of new C-900 PVC pipe. Such replacement shall be performed in accordance with the clay pipe manufacturer's recommendations. PVC repair sleeves shall be supplied by Contractor.

18.09.03 Iron Pipe Repairs

A. Repairs to iron pipe shall be accomplished by one of two methods
   1. Application of an appropriate repair sleeve
   2. When the damaged area is larger than recommended for repair sleeves, the damaged section will be cut out and replaced with a section of new ductile iron pipe or PVC, as specified by the Engineer.

B. The connections of new and old pipe shall be accomplished with two new ductile iron solid sleeves. All iron pipe repair work shall be performed in accordance with the manufacturer's recommendations. All repairs, including sleeves, shall be wrapped in polyethylene encasement.

18.09.04 Reinforced Concrete Pipe Repair

A. Reinforced concrete pipe repair shall be accomplished by the use of a reinforced concrete collar. Reinforcing shall be circumferential with a minimum cross-section area as specified in ASTM Des: C76 for Class V, R.C.P. of the same diameter as the damaged pipe. For damaged areas less than two feet in diameter, the collar may be the sole element of repair. A cutout of corrugated metal pipe shall be placed over the damaged area only to aid in the formation of the collar. The collar shall extend three hundred sixty (360) degrees around the pipe and two feet past the damaged area and corrugated metal in the longitudinal axis.

B. For larger repairs, the collar shall be used as a closure. The damaged pipe length shall be removed and become the property of the Contractor. The replacement length may be jointed with the existing pipe on one end only. The existing portion of the joint shall be thoroughly cleaned, and the rubber gasket replaced. After fully seating the joint, the other end shall receive a concrete collar closure extending two feet past the joint in the longitudinal direction. If the new and existing joints are not identical, the closure shall be used at both ends.

18.09.05 Polyvinyl Chlorine Pipe Repair

A. For non-pressure applications, existing and new pipe shall be jointed with flexible couplings with stainless steel straps as approved in these Technical Specifications. Only the flexible

coupling recommended by the manufacturer for the particular pipes to be jointed shall be used

B. For pressure pipe applications, repairs shall be made by one of the two methods as specified for iron pipe, except replacement pipe shall be PVC pressure pipe.

18.09.06 Final Acceptance

A. In the case of pressure pipe applications, after the pipe repair is complete and still exposed, the pipeline will be placed in service. Visual inspection, by the Engineer, of the repair while the pipeline is pressurized will provide tentative acceptance of the repair, provided no leaks are present. Repair of leaks or unsatisfactory work shall be performed at no cost to the City. Final acceptance will be granted after proper backfilling and surface restoration is accomplished.

B. In the case of non-pressure service, the Contractor shall backfill and have the line inspected by a City Inspector. The line shall be inspected by one of two methods: (1) inspection by mirrors and sunlight and/or (2) television inspection as directed by the Engineer.
   1. Upon submission of inspection video records via USB the City will review and verbally respond within one working day. If the repair is not satisfactory to the Engineer, the Contractor will, at no cost to the City, re-excavate, make repairs, television inspect and backfill.
   2. When the repair is satisfactory to the Engineer, the Contractor will be directed to complete surface restoration. Upon satisfactory completion of surface restoration, final acceptance will be granted.

END OF SECTION

SECTION 20 – WASTEWATER SYSTEM CCTV INSPECTION AND CLEANING

20.01 SCOPE OF SERVICES AND WORK PHASING FOR SYSTEM CCTV INSPECTION AND PIPE CLEANING

A. The purpose of this bid is to obtain competitive unit prices for all labor, material, and equipment necessary to inspect via closed-circuit television (CCTV) and clean existing sanitary sewers ranging in size from 6 to 24-inch diameter. The work includes hydraulic root cutting and cleaning, grinding protruding break-in service connections, remote televising and recording of the sewer location and condition. All project locations will be within the City's service area.

B. All City assets will be identified using the established facility identification code (FID) for all inspection reports, geographical exhibits, data sets and asset management tasks. Assets may include, but not be limited to, manholes, clean outs, gravity mains, force mains, air release valves, and conflict structures. Asset FIDs will be provided to the Contractor prior to the start of inspection. Failure to utilize the FID could result in additional inspection at the Contractors expense.

C. Compliance with this contract shall be complete when all conditions set forth in these specifications have been met. The work to be completed on each section of sewer will be performed as applicable and in phases as defined in the following:

20.01.01 PHASE 1: PRE-CLEANING INSPECTION

A. The preferred method for Pre-Cleaning Inspection is color CCTV conforming to NASSCO Pipeline Assessment Certification Program (PACP), and for the data to be exported electronically in a PACP certified format. The data must be shown in an Asset Management and Viewing Software that is accessible to the City of St. Pete Beach. Since this inspection is performed prior to cleaning, it is understood that the video may not provide an "unobstructed view of the entire pipe".

B. The Contractor may propose other methods to the City prior to bid for inspection such as, zoom camera inspection, digital sidewall scanning inspections, acoustical technology, etc.

C. If the Contractor is performing the Pre-Cleaning Inspection, the method must be pre-approved by the City prior to inspection of the sewer interior.

D. It is not the intent of this specification to require bypass pumping to control heavy flow; however, the Contractor must, at a minimum, make reasonable effort to control the flow by using flushing equipment. See this specification for sequencing of cleaning and inspection during heavy flow

scenarios. The Contractor must also consider weather conditions to obtain the best video image of the sewer. This may require the Contractor to delay any video work after major rain events until the system can return to lower dry weather flow.

E. Based on the quality of the results, the City can reserve the right to reduce the scope of the Phase 1 Pre-Cleaning Inspection.

20.01.02 PHASE 2: CLEANING DETERMINATION

Based on the City and Engineer's review, he or she will determine if cleaning or any additional work will be required. At the sole discretion of the City it is to either declare the work on the particular sewer segment complete or notify the Contractor of additional work (i.e. Phase 3: Light Sewer Cleaning, Heavy Cleaning, Deposit Cut, Root Cut Medium, Root Cut Ball, or Lateral Cut)

20.01.03 PHASE 3: SEWER PIPE CLEANING

The Contractor shall perform the assigned additional work, which may include, but is not limited to the following items as defined in these specifications: Light Cleaning, Heavy Cleaning, Root Cut Medium, Root Cut Ball, Deposit Cut, or Lateral Cut.

20.01.04 PHASE 4: POST CLEANING INSPECTION

Final televising of the sewer segments determined by the City include evaluating the condition of the sewer segments after all cleaning has been performed in Phase 3.

A. The recorded video must show the entire circumference of the sewer. Any flow control to remove standing water and debris shall be incidental to the contract. The Contractor shall submit PACP data to include the electronic video reports, logs, etc. for the City's review.

B. The data must be shown in an Asset Management and Viewing Software that is accessible to the City of St. Pete Beach. The Contractor shall provide up to three software licenenses to the City and the Engineer which shall include, but not be limited to, viewing, editing, and exporting capabilities of all inspection data.

C. The segments of sewer to be cleaned and televised through this contract will be located primarily within the paved areas of the public right-of-way; however, there may be some sewer segments that are located within public easements on private property. The successful bidder, with assistance of the City as required, will be responsible to coordinate and gain access to any and all sewer segments and will be responsible for any restoration in accordance with technical specification Section 07 "Surface Restoration". This will include written authorization between

Contractor and landowner. It is the City's right to omit segments that are adequately covered in the Pre-cleaning Inspection video.

20.02 COMPLIANCE AND ACCEPTANCE

Compliance with this contract shall be complete when all conditions set forth in these specifications have been met. The following defines each work item, the level of effort, and quality of work that will be necessary to meet the intent of this specification:

20.02.01 PRE-CLEANING INSPECTION

A. The preferred method for Pre-Cleaning Inspection is color CCTV conforming to National Association of Sewer Service Companies' (NASSCO) Pipeline Assessment Certification Program (PACP), exported electronically in a PACP compliant format. Other methods for inspection, including CCTV, zoom camera inspection, digital sidewall scanning inspections, acoustical technologies, etc. must be preapproved by the City prior to inspection of the sewer interior.

B. Should the level or type of debris differ from the original inspection, the work type can be adjusted by the City to the proper work type and the work shall be paid at the adjusted, proper rate. The Contractor shall be responsible for providing evidence of the change in conditions to the City.

20.02.02 LIGHT SEWER CLEANING (EACH SEGMENT)

A. The Contractor shall clean the sewer and associated manholes, including drop connections and benches, with hydro-jetting equipment. This will require an unlimited amount of passes and a minimum of two passes of high-velocity hydro-jetting equipment to remove all loose debris and collect it for removal in the downstream manhole. The first pass shall be restricted to 800 psi at the nozzle head, and the second and subsequent passes shall be at 1200 psi. All debris must be removed from the sewer, including any debris that may have been washed up into any service connections (does not include known pre-existing conditions in service connections), drop connections or the bench wall of the manholes. This item does not include any root cutting, deposit removal, or grinding of protruding service connections.

20.02.03 HEAVY SEWER CLEANING (EACH SEGMENT)

A. Pipes that cannot be cleaned by the methods described in the Light Sewer Cleaning sub-section shall be cleaned with rotating nozzle equipment. This also includes Deposits Attached Grease (DAGS) if able to remove with rotating nozzle or other mechanical means; not to

include saws or cutters. Compliance with this section requires substantial effort towards cleaning.

B. Under this bid item, the Contractor shall remove all obstructions in the sewer. All debris must be removed from the sewer, including any debris that may have been washed up into any service connections (does not include known pre-existing conditions in service connections), drop connections or the bench wall of the manholes. This includes all grease, rocks, debris, sticks, etc. that will reduce the hydraulic capacity of the sewer and limit future maintenance access of remote equipment. This work will include an unlimited number of passes by high velocity rotating nozzleequipment in conjunction with specialty cleaning equipment. All pipes shall be restored to at least 95 percent of their nominal diameter. Joint sealant shall be removed to within ¼ inch of the pipe wall. Removal of excessive joint sealant will generally not be required until just prior to lining of the pipe segment (if necessary), unless the joint sealant prevents the passage of the CCTV equipment. The Contractor shall be responsible for any damage to the sewer or any service connections. This item does not include cutting/grinding protruding break-in connections, as that work will be paid under a separate bid item.

C. The Contractor shall maintain detailed documentation of cleaning efforts made to remove these items. Such documentation shall be made available to the City at any time.

D. The Contractor shall immediately notify the City if he believes that this level of cleaning will cause a sewer collapse due to the existing deterioration of the host pipe. The City's determination whether to continue or stop work is final.

20.02.04 ROOT CUT (EACH SEGMENT)

A. Root Cut Medium - Removal of Roots Medium (RM), and Root Balls (RB) in one or two joints.

B. Root Cut Ball – Removal of Root Balls (RB) removed in at least 3 joints.

C. The City shall determine if the sewer segment requires root cut cleaning. All roots must be screened, collected, and removed from the sewer for proper disposal.

D. The Contractor shall immediately notify the City if he believes that these activities performed under this paragraph will cause a sewer collapse due to the existing deterioration of the host pipe. City's determination whether to continue or stop work is final.

20.02.05 DEPOSIT CUT (EACH SEGMENT)

A. Removal of Deposits Attached Encrustation (DAE) and Deposits Attached Grease (DAGS) that require a cutter to remove.

B. Under this bid item, the Contractor shall remove all obstructions in the sewer. All debris must be removed from the sewer, including any debris that may have been washed up into any service connections (does not include known pre-existing conditions in service connections), drop connections or the bench wall of the manholes. This includes all deposits, grease, debris, sticks, etc. that will reduce the hydraulic capacity of the sewer and limit future maintenance access of remote equipment. This work will include an adequate number of passes using high velocity hydro-cleaning equipment required to produce a clean pipe in accordance with these specifications. A mechanical/hydraulic root, chain cutter, etc. may be used where necessary at no additional cost to the City; however, the Contractor shall be responsible for any damage to the sewer or any service connections. This item does not include cutting/grinding protruding break-in connections, as that work will be paid under a separate bid item

C. Compliance with this section requires substantial effort towards cleaning, chipping, cutting, grinding, etc. to remove hardened deposits, grease, etc. The Contractor shall use remote CCTV equipment to monitor the progress of the work and ensure that the sewer is not damaged.

D. The Contractor shall immediately notify the City if they believe that activities performed under this paragraph will cause damage due to the existing deterioration of the host pipe. The City's determination whether to continue or stop work is final.

E. The Contractor shall maintain detailed documentation of cleaning efforts made to remove these items.

F. If attached deposits cannot be removed by tools normally used in the industry, the City should be consulted immediately. The City and the Contractor should discuss whether to cancel the work on that segmentation or negotiate a flat rate or hourly rate for the Contractor to do the work.

20.02.06 LATERAL CUT (EACH SEGMENT)

A. Removal of protruding laterals shall comply with Specification 36 and the requirements outlined below.

B. Removing protruding laterals, excludes DIP, SP, CAS etc.

C. The City shall determine when break-in service connections will require grinding based on his review of the initial survey television inspection. The Contractor shall cut/grind the protruding service connection by using a remote grinding/cutting device capable of removing, concrete, vitrified clay, PVC and other types of pipe material. The device shall be specifically designed to cut/grind protruding service connections. The Contractor shall use remote CCTV equipment to monitor the progress of the work and ensure that the service connection is not damaged.

D. The protruding break-in service connection shall be cut/ground flush to the main sewer pipe without scouring or damaging the main sewer or service connection. All cuttings must be screened, collected, and removed from the sewer for proper disposal.

E. During the final survey television inspection, the Contractor shall slowly pan the entire circumference of the trimmed connection to verify the quality of the work.

F. The Contractor shall immediately notify the City if he believes that the pipe is not structurally sound. The Contractor and City shall discuss the severity and risk of cutting/grinding the lateral. The City shall then determine, if they want the lateral cut/ground, at the City's risk, or if the work should not be performed on this contract.

G. If other than typical lateral materials are encountered, the Contractor shall notify the City and the City and Contractor should discuss the ability, costs and risks associated with cutting/grinding the lateral. The City shall decide whether to cut/grind the lateral or to not cut/grind the lateral. If the City decides to cut/grind the lateral, the price should be negotiated between the City and Contractor, prior to cutting/grinding the lateral.

20.02.07 DEBRIS RECORDS

The Contractor shall keep records of types of debris, removed from each segment of pipe and provide these records to City in the format requested by City.

20.02.08 FINAL SURVEY TELEVISION INSPECTION

As in the initial survey television inspection pay item, CCTV inspections will be conducted entirely in digital format.

All CCTV work shall conform to the most current NASSCO PACP standards. The documentation of the work shall consist of NASSCO PACP CCTV Reports, Unmodified NASSCO PACP database, logs, electronic reports, etc. noting defects and observations encountered during the inspection.

All City assets will be identified using the established facility identification code (FID) for all

inspection reports, geographical exhibits, data sets and asset management tasks. Assets may include, but not be limited to, manholes, clean outs, gravity mains, force mains, air release valves, and conflict structures. Asset FIDs will be provided to the Contractor prior to the start of inspection. Failure to utilize the FID could result in additional inspection at the Contractors expense.

Acceptance of pipe segment cleaning shall be made upon the successful review of the CCTV inspection by the Engineer. If the CCTV inspection shows the cleaning to be unsatisfactory, the Contractor shall be required to repeat the cleaning and CCTV inspection of the pipe segment until the cleaning is shown to be satisfactory. Such repeat cleaning and CCTV inspection shall be made at the Contractor's expense.

20.03 CLEANING EQUIPMENT

A. The wastewater system shall be cleaned with industry standard truck-mounted high velocity hydro-cleaning equipment. No mechanical bucket machinery will be acceptable for the cleaning process. The equipment shall be provided with a minimum of 500 ft of one-inch 10 high-pressure hose with a selection of high velocity nozzles, as required for the cleaning and heavy cleaning operations. The equipment shall have a minimum usable water capacity of 1000 gal. The pumps shall be capable of delivering a minimum 60 gpm at 3000 psi. Pressure to the nozzle shall be regulated by a relief valve, adjustable from a to 1,500 psi minimum. The nozzles shall produce a scouring action from 15 to 45 degrees in all size pipes to be cleaned. The equipment shall carry its own 1,000 gal water tank capable of holding corrosive or caustic cleaning or sanitizing chemicals, engines and pumps, and a hydraulically-driven hose reel. The equipment shall also include a high velocity washing hose for ancillary cleaning of the walls and floor of manholes. The hose shall have an adjustable nozzle capable of producing flow from a fine spray to a solid stream. All controls shall be located so that the equipment can be operated above ground. During hydro-cleaning, the Contractor shall restrict the flow level in the pipe to a maximum of 50 percent of the pipe diameter. Particular care should be taken to avoid flooding house connections during hydro-cleaning operations.

B. The Contractor shall provide equipment capable of removing all sand, dirt, rocks and other debris from the pipe segment to allow unobstructed remote CCTV inspection of all internal pipe surfaces.

C. The Contractor shall certify that backup cleaning equipment, including machines, devices, tools, etc, is available and can be delivered to the site within 24 hours.

D. Any blockages of building service connections resulting from the cleaning or other items of work shall be removed by cleaning of the building connection by the Contractor, at his own expense. Any damage caused by flooding of building service connections shall be corrected by the Contractor, at his own expense.

E. The Contractor shall provide specialty equipment capable of mechanically removing all attached,

hardened and/or cemented debris including, but not limited to, roots, grease, calcification, tuberculation, joint sealant, other hardened or tightly adherent deposits, etc. which cannot be removed by the use of industry standard high velocity hydro-cleaning equipment alone. Specialty equipment shall include, but is not limited to, a root saw, spring blade root cutter chuck or approved equal.

20.04 REFERENCED DOCUMENTS

A. All work must also conform to the latest edition of the following specifications:

1. State Department of Transportation, Construction and Materials Specification.
2. Rules and Regulations and Standard Drawings.
3. Rules and Regulations of the Office of the County/City Engineer.
4. If there is a difference in these specifications, the Rules and Regulations shall govern, DOT Specification.
5. NASSCO PACP Standards.
6. Other standards as appropriate.

B. Notification

1. If observed defects are believed to be such that further cleaning operations may compromise the structural integrity and/or cause the pipe to become unusable, the Contractor must provide written communication to the City's designee of the observed condition(s) and reason to believe that continued cleaning operations may cause substantial damage. The City will then direct the Contractor as to what services, precautions, etc., the City will require of the Contractor. If the contract documents do not address this potential, then the City and Contractor will negotiate in good faith, the conditions under which the work is to continue or cease to continue.

2. This exception may only be used to prevent asset damage and shall not be used to eliminate difficult or adverse cleaning areas that were previously documented in these documents or by prior written communication with the City.

20.05 GENERAL EXECUTION

A. The Contractor shall furnish and maintain, in good condition, all cleaning and televising equipment necessary for proper execution of the work.

B. Maintaining Flow: It will be the responsibility of the Contractor, throughout the tenure of this contract, to provide and maintain sufficient flow at all times to pass any flash of storm flow of drainage ditches and prevent any backwater flooding due to obstruction caused by cleaning or CCTV equipment.

C. Retrieval of Materials and Equipment: It shall be the Contractor's responsibility to remove

materials and equipment that has been lodged in the sewer from cleaning, television inspection, or point repair excavations.

D. After determining the preliminary requirements and the feasibility of effective CCTV inspection, the Contractor shall thoroughly clean all required pipe segments as required to permit an unrestricted inspection by industry standard CCTV inspection equipment. Particular emphasis shall be afforded the removal of accumulated grease, roots, sand, rocks, bricks, sludge and other debris so that the CCTV inspection will clearly show all portions of the pipe being inspected. Acceptance of pipe segment cleaning shall be made upon the successful completion of the CCTV inspection and shall be defined as removing sufficient material to permit an unrestricted view of the pipe internal surfaces and to ensure an effective rehabilitation of the pipe segment, all to the satisfaction of the Engineer.

E. Except during drought conditions, water required for the cleaning will be provided by the City or County at locations to be specified by the City. The City or County shall furnish and install water meters at all points where water is drawn from the City's supply. The City or County will charge a fee for the water used. A backflow prevention device shall be used to prevent contamination of the potable water system. The Contractor is responsible for any damage resulting from improper operation of hydrants. Do not use or obstruct a fire hydrant when there is a fire in the area.

F. The Contractor shall not waste water from the public water supply because of improper connections or from hydrants left open.

G. The Contractor shall remove all bricks, rocks, debris, sludge, dirt, sand, grease, roots and other materials from the pipe segment ordered to be cleaned and collect and remove the resulting debris from the downstream manhole of the pipe segment. Passing waste material between manholes, causing accumulations of sand, system stoppages, or damage to the pumping equipment shall not be permitted. When necessary, a dam trap or weir and screen shall be temporarily installed in the downstream manhole in such manner that debris and solids shall be trapped and retained for subsequent removal.

H. Waste and debris cleaned from the pipe segment shall be removed at the downstream manhole by pumps or other means. The discharge and drainage stream shall be returned downstream to the wastewater collection system for disposal. Under no circumstances shall wastewater or solids be dumped onto the ground surface, street, or into ditches, catch basins or storm drains. All solid and semi-solid debris resulting from the cleaning operations shall be removed from the site and taken to the wastewater treatment facility to which the debris would have arrived in the absence of the cleaning operation, unless directed otherwise. The Contractor is responsible for transporting the debris and must remove and properly dispose of excess water from the debris prior to disposal at the City's wastewater treatment facilities.

I. Where access to manholes in easements and rights-of-way is required, the Contractor shall obtain permission from the homeowner for equipment access.

J. Barricades and warning signs shall be used in work areas and around open manholes. The Contractor shall furnish and maintain traffic controls and safety devices as required.

K. Employ satisfactory precautions to protect the pipe and manholes from damage that might be inflicted by improper selection of the cleaning process or improper use of the equipment. Immediately notify Engineer if fresh soil, pieces of pipe, or other visible signs of potential problems occur during cleaning operation. When using hydraulically propelled devices, take precautions to ensure that the water pressure created does not cause damage or flooding to public or private property. Do not surcharge the wastewater beyond the elevation that could cause overflow of wastewater into area waterways or buildings, or onto the ground.

L. The Contractor shall clean upstream reaches of the system before the downstream reaches are cleaned. Hydro-cleaning equipment shall be inserted in the downstream manhole of the pipe segment, and the cleaning work shall proceed from upstream to downstream. Winching equipment used shall not damage the pipe or manholes.

20.06 SUBMITTALS

A. All submittals shall comply with Specification Section 03 - Submittals and are due as scheduled. Work will not proceed until all submittals are received and approved. The project manager reserves the right to adjust the due dates of the submittals based on Contractor performance. The Contractor shall label each submittal indicating what is represented, name of Contractor, and project number. All submittals identified as being in error shall be re-performed and corrected at the Contractor's expense.

B. Submittals Required with Bid Documents include:

1. List of references per specifications
2. Documentation of Certification of PACP Software
3. Asset Management and Viewing Software

C. Submittals required seven (7) days prior to the Pre- construction Meeting for CCTV Inspection or Pipe Cleaning

1. Name of the project supervisor and resumes.
2. Documentation of NASSCO PACP certification for all CCTV operators, database and software.
3. Site Safety Plan. A complete generic site safety plan must be submitted one week prior to the pre-construction meeting. Work will not begin until an approved site safety plan is in place.
4. Sample inspection CCTV data and video or data from other approved inspection method.
5. Acknowledgment of required nomenclature utilizing the provided FID

D. Submittals Required for the Pre-construction Meeting

1. An initial comprehensive schedule of work to be approved by the City.
2. Management Organization: Provide an organization chart depicting the essential organizational elements and senior personnel of the proposed Contractor and the functions and interrelationships of the personnel proposed to provide technical support, project management and supervision for this project. Provide succinct resumes of the personnel proposed to provide technical support and project management for this project. The personnel designated in the management summary for essential positions shall not be changed except with the permission of City. The City will only approve such a change when, in its opinion, the substitute personnel have equal or greater qualifications and experience to those intended to be replaced.
3. Proof that Contractor is an approved/bonded Contractor with the City.

E. Submittals Required One Week Prior to Any Cleaning & Televising Work

1. Site specific site safety plan addenda.
2. Entry releases, if applicable

F. Weekly Submittals

1. Detailed updates to the work schedule will be provided to the project manager no later than 1:00 p.m. on the Friday preceding the next week's cleaning and televising work.
2. USB External Storage Drive with CCTV videos, logs, and / or electronic worksheets submitted 7 days prior to work). All field paperwork must be submitted before the Contractor’s invoice will be processed for payment.
3. Corrections to punch list items as required by the project manager to fulfill the requirements of this specification.

G. Final Submittals Prior to Payment

1. Corrections to punch list items as required by the City to fulfill the requirements of this specification.

20.07 OWNER RIGHTS

A. The City reserves the right to stop the work when, in the project manager's judgment, the Contractor's work or activities are threatening the health and safety of the public or endangering the environment or endangering the waters of the state. Work shall not proceed until a satisfactory resolution has been achieved, as determined in the sole and unfettered opinion of the City.

B. The Contractor or Subcontractor shall not perform any work which is not specifically identified in the work schedule unless approved by the City. Notification of such work must be received no later than 8:00 a.m. on the day the work is to be performed. A list of persons available to be notified will be given at the pre-construction meeting.

20.08 EMERGENCY RESPONSE

The Contractor shall provide a telephone number and pager number to the City. These numbers are intended for the project manager's use in contacting the evening/weekend/holiday emergency work crew for emergencies resulting from the Contractor's actions or lack thereof during this project. This crew shall be responsible for contacting the City within one-half hour after the first verbal or electronic notification. If the Contractor's crew has not responded to the site of the emergency within one hour of the first summons, verbal or electronic, the City will make all necessary repairs and bill the Contractor for all work performed. Costs related to the emergency response will be incidental to the contract and not measured for payment.

20.09 SEQUENCE OF INSPECTION AND CLEANING

A. The Contractor shall coordinate with the City and any Jurisdictions required to isolate any pipe segments with significant flow that would prohibit cleaning and inspection. The cleaning and inspection of the pipe segment shall be done outside of peak hour flows. The steps to clean and inspect the pipe segment include:

1. The lift/pump stations contributing flow into the sewer line to be inspect and cleaned must be pumped down.
2. Once stations are pumped down, the stations shall be turned off and the sewer line must be plugged to allow work to commence.
3. The Contractor must monitor the levels within the stations at all times while work has started with City personnel present.
4. After inspection and cleaning within the pipe segment is completed, the plug shall be removed and the stations shall be restarted to be pumped down again.
5. Repeat steps 1-4 for each segment of sewer line to be cleaned or inspected.

B. The Contractor is responsible for the operation and maintenance of the bypass systems.

C. The Contractor shall perform all work associated with bypassing without causing damage to existing improvements to remain, and without causing a spill of sewage outside the sewer system. Any damage results from the Contractor's work shall be repaired or replaced to the satisfaction of the City, and at no cost to the City. All fines, and costs associated with the cleanup of spills, shall be the responsibility of the Contractor.

END OF SECTION

SECTION 21 – CURED-IN-PLACE-PIPE (CIPP)

21.01 GENERAL

It is the intent of this section of these Specifications to provide for the reconstruction of pipelines and conduits by the installation of a resin-impregnated flexible tube that is either inverted or pulled into the original pipeline/conduit and expanded to fit tightly against said pipeline by the use of water or air pressure. The resin system shall then be cured by elevating the temperature of the fluid (water/air) used for the inflation to a sufficient enough level for the initiators in the resin to affect a thermosetting reaction.

The Contractor shall furnish all materials, labor, equipment, and services necessary for liner installation including: traffic control, pump around pumping and/or diversion of wastewater flows, cleaning and closed circuit television video (CCTV) inspection of the pipe segment to be lined, service lateral reconnection, final CCTV inspection and testing of lined pipe system, surface restoration, and cleanup of the Work site.

The Contractor is advised that this Contract requires work in active wastewater collection systems and shall follow all federal, state and local requirements for safety in confined spaces. The Contractor shall conform to all guidelines by the Occupational Safety and Health Administration (OSHA) Federal Regulations; 29 CFR Ch. XVII, Section 1910.146 Confined Space Entry.

21.02 REFERENCE DOCUMENTS

This Specification references ASTM D5813 (Standard Specification for Cured-in-Place Thermosetting Resin Sewer Pipe) ASTM F1216 (Standard Practice for Rehabilitation of Existing Pipelines and Conduits by the Inversion and Curing of a Resin-Impregnated Tube), ASTM F1743 (Standard Practice for Rehabilitation of Existing Pipelines and Conduits by Pulled-In-Place Installation of Cured-In-Place Thermosetting Resin Pipe), and ASTM D3839 (Standard Practice for Underground Installation of “Fiberglass” (Glass-Fiber Reinforced Thermosetting Resin) Pipe).

21.03 QUALIFICATION REQUIREMENTS

The system proposed (materials, methods, workmanship) must be proven through previous successful installations to an extent and nature satisfactory to the City and the Engineer that is commensurate with the size of the project being proposed. Since CIPP is intended to have a 50-year design life, only products deemed to have this performance will be accepted. All products and installers must be pre-approved prior to the formal opening of proposals.

Products and Installers seeking approval must meet all of the following criteria to be deemed commercially acceptable:

For a Product to be considered Commercially Proven, a minimum of 250,000 linear feet and/or 1000 line sections must have been successfully installed in North America. The Manufacturer (Li–censor) shall have completed sufficient enough testing to document that the materials and the method(s) of installation proposed will produce the desired long-term performance. All products used shall conform to the Contract Documents and these Technical Specifications. Chemical grout designed for injection shall be: AV -100 chemical grout as manufactured by Avanti International, or approved equal.

For an Installer to be considered Commercially Proven, the Installer must satisfy all insurance, financial, and bonding requirements of the City, and must have at least three years active experience in the commercial installation of the product bid. The Installer's key personnel shall have at least 100,000 linear feet and/or 300 line sections of successful experience (included in this experience shall be a sufficient quantity of installations in the sizes proposed for this project). The Installer shall be "ISO" certified or demonstrate that he/she has a similar quality assurance system in place. Additionally, the Contractor shall be certified and/or licensed by the liner manufacturer(s) as an approved installer for the products referenced in this specification

Documentation for products and installers seeking pre-approved status must be submitted no less than two weeks prior to the proposal due date to allow time for adequate consideration. The City will advise of acceptance (or rejection) a minimum of three days prior to the due date. All required submittals must be satisfactory to the City.

21.04 SUBMITTALS

The Contractor shall submit the following information:

1. Manufacturer's certification that the materials to be used meet the referenced standards and these specifications.

2. License or certificate verifying Manufacturer's/Licensor's approval of the installer.

3. Proposed equipment and procedures for accomplishing the work.

4. Lining Manufacturer's product data and instructions for resin and catalyst system.

5. Contractor's procedures for sealing CIPP liners from groundwater infiltration/migration at manholes. Details of all component materials and construction details such as hydrophilic rubber seals.

6. Manufacturer's or Assembler's guidelines for storage procedures and temperature control, handling and inserting the liner, curing requirements and details, service connection methods, and trimming and finishing.

7. Manufacturer's or Assembler's guidelines for minimum and maximum pressures, temperatures, and time durations to be used during liner inversion, cure, and cool down. 8. Procedures for cool down and relieving static head after the CIPP liner is cured

8. Manufacturer's or Assembler's guidelines for factory and/or field (whichever applies) wet out procedures including: volume of resin per unit of liner, roller gap setting, mixing ratios and procedures for resin and catalyst/hardener, shelf life of resin, pot life of resin, and required wet out procedure to ensure full saturation.

9. The Contractor shall also provide field measurements and liner sizing calculations which demonstrate the liner wall thickness design for each pipe segment and that the liner has been properly undersized to avoid the creation of wrinkles or folds. Tabular liner wall thickness calculations shall be provided for each pipe diameter in no less than 1-foot increments from 1 foot to 6 feet cover depth and in 2-foot cover depth increments thereafter. The tabulated liner wall thickness

for each pipe diameter/cover depth interval shall be the maximum wall thickness calculated over the cover depth interval. Special liner wall thickness calculations shall be submitted for installations with less than 3 feet of cover. The liner wall thickness shall be increased as required based on actual pipe ovality determined by the pre-installation CCTV inspection.

10. The Contractor shall submit pump around pumping and/or diversion plans to the Engineer a minimum of 14 days prior to the needed use for review and approval. In some cases verbal confirmation of the plan and approval with the Engineer or City Inspector may be used in lieu of a written plan. The Contractor shall notify the Engineer a minimum of 48 hours prior to commencement of the pump around operation. Failure to receive approval by the Engineer or City Inspector may result in the Contractor's Work being halted at no cost to the City.

11. The Contractor shall submit drawings that identify the liner insertion, pump around pumping locations and methods with sufficient detail to assure that the Work can be accomplished without spill or discharge of wastewater. The pump around pumping plan shall include an emergency response plan to be followed in the event of a failure of the pumping system.

21.05 MATERIALS

21.05.01 The Tube

The tube shall consist of one or more layers of a flexible needled felt or an equivalent nonwoven or woven material, or a combination of nonwoven and woven materials, capable of carrying resin and withstanding the installation pressures and curing temperatures. The tube should be compatible with the resin system to be used on this project. The material should be able to stretch to fit irregular pipe sections and negotiate bends.

The tube should be sewn or flame-bonded to a size that, when installed, will tightly fit the internal circumference and the length of the original conduit. Allowances should be made for the longitudinal and circumferential stretching that occurs during placement of the tube.

The tube shall be uniform in thickness and when subjected to the installation pressures will meet or exceed the designed finish wall thickness.

Any plastic film applied to the tube on what will become the interior wall of the finished CIPP shall be compatible with the resin system used, translucent enough that the resin is clearly visible, and shall be firmly bonded to the felt material.

The outside of the tube shall be marked for distance at regular intervals along its entire length, not to exceed 5 feet. Such markings shall also include the lining manufacturer’s name or identifying symbol.

Seams in the tube shall be stronger than the non-seamed felt.

The minimum tube length shall be that deemed necessary by the Contractor to effectively span the distance from the inlet to the outlet of the respective manholes or access points, unless otherwise specified. The Contractor shall verify the lengths in the field before impregnation of the tube with

resin. An individual tube insertion operation may be made over multiple contiguous pipe segments as determined in the field by the Contractor and reviewed by the Engineer.

21.05.02 The Resin System

The resin system shall be a corrosion resistant polyester, vinylester, or epoxy and catalyst system that when properly cured meets the minimum requirements given herein or those that are to be utilized in the design of the CIPP for this project. Resin shall not be subjected to ultraviolet light and shall form no excessive bubbling or wrinkling during lining.

21.06 STRUCTURAL REQUIREMENTS

The design thickness of the liner shall be arrived at using standard engineering methodology. ASTM F1216, Appendix X1, has such an acceptable methodology that may be used where applicable. The long-term flexural modulus to be used in the design shall be verified through testing. The long-term modulus shall not exceed 50% of the short-term value for the resin system unless the tube contains reinforcements. In the event that a reinforced tube is utilized, the long-term flexural modulus shall be the percentage of the short-term modulus as determined by the above referenced testing.

The layers of the finished CIPP shall be uniformly bonded. It shall not be possible to separate any two layers with a probe or point of a knife blade so that the layers separate cleanly or such that the knife blade moves freely between the layers. If separation of the layers occurs during testing of the field samples, new samples will be cut from the work. Any reoccurrence may be cause for rejection of the work.

The finished CIPP shall fit tightly to the host pipeline at all observable points and shall meet or exceed the minimum thickness established by the design process. The materials properties of the finished CIPP shall meet or exceed the following structural standards:

MINIMUM PHYSICAL PROPERTIES

Property	ASTM Test Method	Polyester System	Filled Polyester System	Vinyl Ester System
Flexural Strength	D790	4,500psi	4,500psi	5,000psi
Flexural Modulus (Initial)	D790	250,000psi	400,000psi	300,000psi
Flexural Modulus (50 Yr)	D790	125,000psi	200,000psi	150,000psi
Tensile Strength	D638	3,000psi	3,000psi	4,000psi

The required CIPP liner wall thickness shall be based, as a minimum, on the physical properties in Section 17.080 of this Specification, in accordance with the design equations in the Appendix of ASTM F1216, and the following design parameters:

Design Safety Factor	=	2
Retention Factor for Long-Term Flexural Modulus to be used in Design *(as determined by Long-Term tests described in Section 17.08B)*	=	1% - 50%

Ovality	=	5%
Groundwater Depth (above invert)	=	Assume at Existing Grade
Soil Depth (above crown)	=	Based on field measurements
Soil Modulus	=	700 psi
Soil Density	=	120 pcf
Live Load	=	AASHTO HS - 20
Design Condition	=	Fully Deteriorated
Enhancement Factor	=	7.0
Poisson's Ratio	=	0.3

The CIPP liner material shall conform to the minimum wall thicknesses, as listed below:

MINIMUM WALL THICKNESSES

CIPP	Thickness
4"-6"	3.0 mm
8"-12"	6.0 mm
15"	7.5 mm
18"-21"	9.0 mm
24"-27"	10.5 mm
30"-36"	12.0 mm
42"	13.5 mm
48"	15.0 mm

Any layers of the tube that are not saturated with resin prior to insertion into the host pipe shall not be included in the CIPP liner wall structural thickness computation.

21.07 INSTALLATION

The CIPP shall be installed in accordance with the practices given in ASTM F1216 (for direct inversion installations) or ASTM F1743 (for pulled-in-place installations). The quantity of resin used for the tube's impregnation shall be sufficient to fill the volume of air voids in the tube with additional allowances being made for polymerization shrinkage and the anticipated loss of any resin through cracks and irregularities in the original pipe wall. A vacuum impregnation process shall be used in conjunction with a roller system to achieve a uniform distribution of the resin throughout the tube. The impregnated liner tube shall be transported to and stored at the site in such a manner that it will not be damaged, exposed to direct sunlight, or result in any public safety hazard. The impregnated liner tube shall be kept cool during shipment and storage. All materials shall be subject to inspection and review prior to installation.

Contractor shall ensure that an Engineer approved procedure is followed for sealing the liner from all groundwater infiltration and migration at connections to and within all manholes. Hydrophilic sealing material shall be placed per the Manufacturer's recommended product guidelines and Contractor's/Manufacturer's approved procedures prior to liner installation. Temperature gauges shall be placed at the upstream and downstream ends of the reach being lined to monitor the pressurized fluid's (air or water) temperature. In addition to monitoring the temperature inside the tube, temperature gauges shall be placed between the host pipe and the liner at as many points as is practical to record the heating that takes place on the outside of the liner. The impregnated tube shall be inserted through an existing manhole or access structure by means of the manufacturer's recommended installation process in accordance with ASTM F1216. The application of hydrostatic head, compressed air, or other means shall fully extend the CIPP liner to the next designated manhole or termination point and inflate and firmly adhere the liner to the host pipe wall. The liner tube shall be installed at a rate less than 10 feet per minute at all times. If the CIPP liner installation fails, the Contractor shall be responsible for operating the bypass pumping equipment for the additional time required until the installation can be completed, at the Contractor's expense.

Curing of the resin system shall be as per the Manufacturer (Licensor) of the CIPP product. The temperatures achieved and the duration of holding the pressurized fluid at those temperatures shall be per the Manufacturer's (Licensor's) established procedures. If a heat source is required after placement is completed, suitable heat source and distribution equipment shall be provided. The equipment shall be capable of circulating hot water, air, and/or steam throughout the section by means of a pre-strung hose which has been perforated in accordance with the manufacturer's recommendations or other methods acceptable by the Engineer to raise the temperature uniformly above the temperature required to affect a resin cure. This temperature shall be determined by the manufacturer based on the resin/catalyst system employed. The heat source piping shall be fitted with continuous monitoring thermocouples to gauge the temperature of the incoming and outgoing water, steam, and/or air supply. Water, steam, or air temperature during the cure period shall meet the requirements of the resin manufacturer as measured at the heat source inflow and outflow return lines. The Contractor shall provide standby equipment to maintain the heat source supply. An additional continuous monitoring thermocouple shall be placed between the impregnated felt tube and the pipe invert at the remote manhole and at a point midway between the upstream and downstream manholes to determine the temperature during the cure. The temperature during the cure shall not be less than 130 degrees F at the boundary between the pipe wall and the liner unless otherwise required because of the resin system used. The initial cure shall be deemed to be completed when inspection of the exposed portions of the liner appears hard and sound and the remote temperature sensors indicate that an exotherm has occurred. The cure period shall be of duration and temperature recommended by the resin manufacturer during which time the recirculation of the water, steam, and/or air and cycling of the heat exchanger continuously maintain the required temperature. A data logger shall be used for Main Liners to continuously record temperature, pressure and time during heating, cure and cool down of the liner at the insertion, intermediate and termination manholes. Where requested, this data shall be provided to the Engineer for each pipe segment.

The cured liner shall be cooled to a temperature below 100 degrees F before relieving the static head or pressure in the lined pipe and returning normal flow back into the system. The cool down may be accomplished by introducing cool water or air into the lined pipe. Care shall be taken in the release of the static head or pressure so that a vacuum will not develop which could damage the newly installed liner. Water for cooling shall be supplied by the Contractor. The finished liner shall be continuous over the

length of the host pipe and be free from defects such as dry spots, delamination and lifts. All materials other than the cured liner should be removed from the pipe by the Contractor.

21.08 CIPP MAIN LINER TERMINATION AND CONNECTION IN MANHOLES

A. The liner shall achieve a watertight seal through the manhole channel/invert and at the host pipe(s) where it enters/exits any manhole. The use of fiber felt and a suitable resin system, hydrophilic rubber waterstops, injection grouting, or other Engineer approved methods compatible with the liner shall be used to ensure a watertight CIPP liner system. CIPP liner entries at manholes shall be smooth and free of irregularities. The top half of the CIPP liner shall be neatly cut at least 4-inches away from the wall.

B. The channel in the manhole shall be a smooth continuation of the pipe(s) and shall be merged with other pipes or channels. All manholes shall be individually inspected for liner cut off, benches and sealing Work. Any visible leaks through or around the CIPP liner shall be corrected by an approved method at the Contractor's expense. It is anticipated that some pipe to manhole connections will require supplementary efforts to affect an acceptable watertight seal.

C. The channel in the manhole shall be a smooth continuation of the liner and pipe(s) and shall be merged with other channels. Inverts and/or benches shall be resurfaced/repaired (or constructed where necessary as directed by the Engineer) to provide a smooth flow channel. The Engineer may also require that the manhole floor and base section receive an approved monolithic coating which is chemically compatible with the CIPP liner, and any chemical/cementitious grout or repair material used in the manhole.

21.09 SERVICE RECONNECTION

A. The Contractor shall be responsible for internally reopening the service connections to the lined pipe using a pivot-head CCTV inspection camera and a remote cutting tool. The Contractor shall locate the service connections from inside the lined pipe, cut a hole matching the connection diameter, and grout the area where the service connection enters the lined pipe to produce a watertight seal approved by the Engineer. Grouting of service connections shall be accomplished using a "Logiball" type lateral packer to seal the first 18 inches of the service connection in accordance with the manufacturer's instructions and the Technical Specifications. The Contractor shall provide a nearly full-diameter hole, free from burrs, loose or abraded material, hanging fibers or projections, and with a neat, smooth and crack-free edge. The hole shall be 95 percent minimum and 100 percent maximum of the original service connection diameter. The invert of the service connection shall match the bottom of the reinstated service opening. The Contractor shall certify he has a minimum of 2 complete working cutters plus spare key components on the site before each installation. All cuttings shall be collected and disposed of properly.

B. All service connections shall be reopened including those that go to unoccupied or abandoned buildings or vacant lots, unless directed otherwise by the Engineer. Begin reconnection of services within four hours after liner insertion. The Contractor shall initially reopen each connection in an expeditious manner with a less than a full size opening to release wastewater temporarily stored in the service lateral. The Contractor shall then complete reconnection of all services within 24 hours. The Contractor shall immediately reopen any missed connections and repair any holes drilled in

error. Faulty cuts shall be repaired by methods approved by the Engineer at no additional cost to the City.

C. It is the intent of these Specifications that service connections be reopened without excavation. No additional payment will be made for excavations for the purpose of reopening connections and the Contractor will be responsible for all costs and liability associated with such excavation and restoration work.

21.10 INSTALLATION RESPONSIBILITIES FOR INCIDENTAL ITEMS

It shall be the responsibility of the Owner to locate and designate all manhole access points open and accessible for the work, and to provide rights of access to these points. If a street must be closed to traffic because of the orientation of the pipeline, the Owner shall institute the actions necessary to do this for the mutually agreed time period. The Owner shall also provide free access to water hydrants for cleaning, installation of the tube, and other work items requiring water.

The Contractor, when required, shall remove all internal debris out of the pipeline that will interfere with the installation of the CIPP. The Owner shall provide a dumpsite for all debris removed during the cleaning operations. Unless stated otherwise, it is assumed that this site will be at or near the sewage treatment facility to which the debris would have arrived in absence of the cleaning operation. Any hazardous waste encountered during this project will be considered as a changed condition.

The Contractor, when required, shall provide for the flow of sewage around the section, or sections, of pipe designated for rehabilitation. The bypass shall be made by plugging the line at the existing upstream manhole and pumping the flow into a downstream man- hole or adjacent system. The pump and bypass lines shall be of adequate capacity and size to handle the anticipated flow. The City may require a detail of the bypass plan to be submitted.

Experienced personnel trained in locating breaks, obstacles, and service connections by close circuit television shall perform inspection of the pipelines. The interior of the pipe- line shall be carefully inspected to determine the location of any conditions that may pre- vent proper installation of the CIPP into the pipelines, and it shall be noted so that these conditions may be corrected. A videotape and suitable log shall be kept for later reference by the City.

It shall be the responsibility of the Contractor to clear the line of obstructions such as solids and roots that will prevent the insertion of CIPP. If pre-installation inspection reveals an obstruction such as a protruding service connection, dropped joint, or a collapse that will prevent the installation process, and it cannot be removed by conventional sewer cleaning equipment, then the Contractor shall make a point repair excavation to uncover and remove or repair the obstruction. Such excavation shall be approved in writing by the City's representative prior to the commencement of the work and shall be considered as a separate pay item.

The Contractor shall make every effort to maintain service usage throughout the duration of the project. In the event that a service will be temporarily out of service, the maximum amount of time of no service shall be 16 hours for any property served by the sewer. The Contractor shall be required to notify the City and all affected properties whose service laterals will be out of commission and to advise against water usage until the sewer main is back in service. Such notification shall be provided to the Utility Department at least one week prior to service disconnecting.

A public notification program shall be implemented, and shall as a minimum, require the Contractor to be responsible for contacting each home or business connected to the sanitary sewer and informing them of the work to be conducted, and when the sewer will be off-line. The Contractor shall also provide the following:

A. Written notice to be delivered to each home or business describing the work, schedule, how it affects them, and a local telephone number of the Contractor they can call to discuss the project or any problems that could arise.

B. Personal contact and attempted written notice the day prior to the beginning of work being conducted on the section relative to the residents affected.

C. Personal contact with any home or business that cannot be reconnected within the time stated in the written notice.

21.11 QUALITY ASSURANCE PROCEDURES

21.11.01 Material

A. All material testing shall be performed and certified by a registered independent, third-party laboratory.

B. Wall thickness of samples shall be determined as described in ASTM F1216, Section 8 or ASTM F1743, Section 8. The minimum wall thickness at any point shall not be less than 87.5% of the design thickness as calculated in Section 17.08 of this Specification.

C. The Contractor shall obtain, prepare and store appropriate samples for all liners installed under this Contract. The Contractor shall provide samples of the cured lining material from the actual installed liner at a minimum of one set per each liner insertion setup. The preparation and testing of these samples shall be in accordance ASTM F1216, Section 8. The Contractor shall coordinate the required testing of the samples with the laboratory, and the City will pay for the initial testing of these samples in accordance with the pay item. The Contractor shall pay for the cost of retests made necessary by the failure of the samples to meet the specified requirements.

D. The cured liner shall be sampled and tested for flexural strength and flexural modulus (short term). Flexural strength and modulus shall be tested in accordance with the requirements of ASTM 0790. The liner shall be in compliance with the physical properties stated in this Specification.

E. Corrosion resistance requirements shall be as stated in ASTM F1216, Section X2, Chemical Resistance Tests.

21.11.02 Field

A. Up to 10 percent of the installed CIPP Main Liners may be tested for exfiltration in accordance with ASTM F1216, Section 8.2 prior to service lateral reconnections. Testing shall exclude maximum pressure limitation (4.3 psi) at lowest end. Leakage testing shall be performed after

all dry and non-bondable hoses and tubes are completely removed from the liner. If the liner fails the test, Contractor shall repair or replace liner as required until the tested segment passes.

B. After completion of the installation of Main Liners, service reconnections, and finish work at the manholes, the lined pipe and adjacent manholes shall be televised by the Contractor at his expense, with a color CCTV inspection tilt-head camera recorded in digital format, as required by these Specifications. Pre-installation and post-rehabilitation inspections shall either be recorded on the same media or shall be referenced, if recorded on separate media. Acceptance of the Work shall be based on Engineer's review of the CCTV inspection. Post-rehabilitation CCTV inspection shall not be performed in conjunction with cleaning operations and the liner wall shall be as dry as practical during this inspection (no dripping or splashing). All CCTV inspections delivered to the City shall be in accordance with the Technical Specifications.

END OF SECTION

SECTION 23 – FIBERGLASS WET WELL OR MANHOLE LINER

23.01 GENERAL

Fiberglass reinforced polyester wet wells shall be manufactured from commercial grade polyester resin or vinyl ester resin, with fiberglass reinforcements. The resin system shall be suitable for atmospheres containing hydrogen sulfide and dilute sulfuric acid as well as other gases associated with the wastewater collection systems. The manhole liner or fiberglass wet well shall be a one-piece unit manufactured to meet or exceed all specifications of A.S.T.M. D-3753 latest edition as manufactured by L.F. Manufacturing, Inc., Giddings, Texas, or an approved equal. Section 37 “Wastewater Structure Rehabilitation” contains additional information about fiberglass liners and will govern over this section in the event of a conflict.

23.02 MATERIALS

A. RESIN:
The resins used shall be a commercial grade unsaturated polyester resin.

B. REINFORCING MATERIALS:
The reinforcing materials shall be commercial Grade “E” type glass in the form of mat, continuous roving, chopped roving, roving fabric, or a combination of the above, having a coupling agent that will provide a suitable bond between the glass reinforcement and the resin.

20.02.01 FIBERGLASS WET WELL MATERIALS

A. SURFACING MATERIALS
If reinforcing materials is used on the surface exposed to the contained substance, it shall be a commercial grade chemical-resistant glass that will provide a suitable bond with the resin and leave a resin rich surface.

B. FILLERS AND ADDITIVES
Fillers, when used, shall be inert to the environment and wet well construction. Additives, such as thixotropic agents, catalysts, promoters, etc., may be added as required by the specific manufacturing process to be used. The resulting reinforced plastic material must meet the requirement of this specification.

20.02.02 FRP MANHOLE LINER MATERIALS

A. INTERIOR SURFACING MATERIAL
The inner surface exposed to the chemical environment shall be a resin-rich layer of 0.010 to 0.020 inch thick. The inner surface layer exposed to the corrosive environment shall be followed with a minimum of two passes of chopped roving of minimum length 0.5 inch (13 mm) to maximum length of 2.0 inch (50.8 mm) and shall be applied uniformly to an equivalent weight of 3 oz/ft. Each pass of chopped roving shall be well rolled prior to the application of additional reinforcement. The combined thickness of the inner surface and interior layer shall not be less than 0.10 inch (2.5 mm).

B. WALL CONSTRUCTION PROCEDURE:
After inner layer has been applied the manhole liner wall shall be constructed with chop and continuous strand filament wound manufacturing process which insures continuous reinforcement and uniform strength and composition. The cone section, if produced separately, shall be affixed to the barrel section at the factory with resin-glass reinforced joint resulting in a one piece unit. Seams shall be fiberglassed on the inside and the outside using the same glass-resin jointing procedure. Field joints shall not be acceptable by anyone except the manufacturer.

C. EXTERIOR SURFACE:
For a UV inhibitor the resin on the exterior surface of the manhole liner shall have gray pigment added for a minimum thickness .125 inches

D. FILLERS AND ADDITIVES:
Fillers, when used, shall be inert to the environment and manhole construction. Sand shall not be accepted as an approved filler. Additives, such as thixotropic agents, catalysts, promoters, etc., may be added as required by the specific manufacturing process to be used to meet the requirements of this standard. The resulting reinforced-plastic material must meet the requirements of this specification.

23.03 WET WELL FABRICATION

A. EXTERIOR SURFACE:
The exterior surface shall be relatively smooth with no sharp projections. Handwork finish is acceptable if enough resin is present to eliminate fiber show. The exterior surface shall be free of blisters larger than ½ inch in diameter, delamination and fiber show.

B. INTERIOR SURFACE:

The interior surface shall be resin rich with no exposed fibers. The surface shall be free of grazing, delamination, blisters larger than ½ inch in diameter, and wrinkles of 1/8 inch or greater in depth. Surface pits shall be permitted up to 6 square feet if they are less than ¾ inch in diameter and less than 1/16 inch deep.

C. FIBERGLASS REINFORCED BOTTOM:

The bottom to be fabricated using fiberglass material as stated in Section 20.02. Material and installation to meet all physical requirements as per Section 20.05. Bottom to be attached to wet well pipe with fiberglass layup to comply with A.S.T.M.-D3299 specifications. When reinforcement is necessary for strength, the reinforcement shall be completely enclosed with a fiberglass layup per A.S.T.M.-D3299.

D. FIBERGLASS REINFORCED TOP:

The fiberglass wet well top shall be fabricated using fiberglass material as stated in Section 20.02. Material and installation to meet all physical requirements as per Section 20.05. Top to be attached to wet well pipe with fiberglass layup to comply with A.S.T.M.-D3299 specifications.

When reinforcement is necessary for strength, the reinforcement shall be completely enclosed with a fiberglass layup per A.S.T.M.-D3299.

E. INSTALLATION OF STUBOUTS:

Effluent, service, or discharge lines made be factory installed. Approved methods are PVC sewer pipe, Inserta-Tee fittings, or Kor-N-Seal boots. Installation of stubouts to be fiberglass layup to comply with A.S.T.M.-D3299 specifications.

F. DEFECTS NOT PERMITTED:

A. Exposed fibers: glass fibers not wet out with resin
B. Resin runs: runs of resin and sand on the surface.
C. Dry areas: areas with glass not wet out with resin.
D. Delamination: separation in the laminate.
E. Blisters: light colored areas larger than ½ inch in diameter.
F. Crazing: cracks caused by sharp objects.
G. Pits of Voids: air pockets.
H. Wrinkles: smooth irregularities in the surface
I. Sharp projection: fiber or resin projections necessitating gloves for handling.

23.04 FRP MANHOLE LINER DESIGN

A. INTERIOR ACCESS:

All manhole liners shall be designed so that a ladder or step system can be supported by the installed manhole liner.

B. MANWAY REDUCER:

Manway reducers will be concentric with respect to the larger portion of the manhole liner diameters through 60 inches. Larger manhole liners may have concentric or eccentric manway reducer openings.

C. COVER AND RING SUPPORT:

The manhole liner shall provide an area for which grade rings or brick can be installed to accept a typical metal ring and cover and have the strength to support a traffic load without damage to the manhole liner.

D. EXTERIOR SURFACE:

The exterior surface shall be relatively smooth with no sharp projections. Hand-work finish is acceptable if enough resin is present to eliminate fiber show. The exterior surface shall be free of blisters larger than 0.5 inch in diameter, delamination or fiber show.

E. INTERIOR SURFACE:

The interior surface shall be resin rich with no exposed fibers. The surface shall be free of crazing, delamination, blisters larger than 0.5 inch in diameter and wrinkles of 0.125 inch or greater in depth. Surface pits shall be permitted if they are less than 0.75 inch in diameter and less than 0.0625 inch deep. Voids that cannot be broken with finger pressure and that are entirely below the resin surface shall be permitted if they are less than 0.5 inch in diameter and less than 0.0625 inch thick.

F. REPAIRS:

Any manhole repair is subject to meet all requirements of this specification.

G. MANHOLE LENGTH:

Manhole lengths shall be in 6-inch increments +/- 2 inches.

H. DIAMETER TOLERANCE:

Tolerance of inside diameter shall be +/- 1% of required manhole diameter.

23.05 PHYSICAL REQUIREMENTS

20.05.01 LOAD RATING

The complete wet well or manhole liner shall have a minimum dynamic-load rating of 16,000 ft-lbs when tested in accordance with A.S.T.M. 3753 Section 8. To establish this rating, the complete wet well or liner shall not leak, crack, or suffer other damage when load tested to 40,000 lbs and shall not deflect vertically downward more than ¼ inch at the point of load application when loaded to 24,000 lbs.

20.05.02 STIFFNESS

The wet well or manhole liner cylinder shall have a minimum pipe-stiffness values shown in the table below when tested in accordance with A.S.T.M. 3753 Section 8.

STIFFNESS REQUIREMENTS

FIBERGLASS WET WELL		MANHOLE LINER	
LENGTH-FT	F/AY – PSI	LENGTH-FT	F/AY – PSI
10 - 20	2.01	3 – 6.5	0.75
21 - 30	3.02	7 – 12.5	1.26
31 - 40	5.20	13 - 20.5	2.01

PHYSICAL PROPERTIES:	FIBERGLASS WET WELL		MANHOLE LINER	
	HOOP DIRECTION	AXIAL DIRECTION	HOOP DIRECTION	AXIAL DIRECTION
a. Tensile Strength (psi)	18,000	5,000	18,000	5,000
b. Tensile Modules (psi)	0.8 x 10^6	0.7 x 10^6	0.6 x 10^6	0.7 x 10^6
c. Flexural Strength (psi)	26,000	4,500	26,000	4,500
d. Flexural Modules (psi)	-	-	1.4 x 10^6	0.7 x 10^6
(no ribs – 48”, 60”, 72”)	1.4 x 10^6	0.7 x 10^6	-	-

(with ribs – 96", 144")	0.7 x 10^6	0.7 x 10^6	-	-
e. Compressive (psi)	-	-	18,000	5,000

23.06 TEST METHODS

Tests shall be performed as specified in A.S.T.M. 3753 latest edition, Section 8.

23.07 INSTALLATION

23.07.01 FIBERGLASS WET WELL INSTALLATION

A. EXCAVATION:

A. General:

The limit of excavation shall be such to allow for placing and removing forms, installing sheeting, shoring, bracing, etc. The Contractor shall pile excavated material in a manner that will not endanger the work and will avoid obstructing sidewalks, driveways, power poles, etc. Drainage shall be kept clear.

B. Vertical Sides:

When necessary to protect existing or proposed structures or other improvements, the Contractor shall maintain vertical sides of the excavation. The limit shall not exceed three feet outside the footing on a vertical plane parallel to the footing except where specifically approved otherwise by the Engineer. The Contractor shall provide and install any sheeting, shoring, and bracing as necessary to provide a safe work area as required to protect workmen, structures, equipment, power poles, etc. The Contractor shall be responsible for the design and adequacy of all sheeting, shoring, and bracing. The sheeting, shoring, and bracing shall be removed as the excavation is backfilled in such a manner as to prevent injurious caving.

C. Sloping sides:

Where sufficient space is available, the Contractor shall be allowed to back slope the sides of the excavation. The back slope shall be such that the excavation shall be safe from caving. The type of material being excavated shall govern the back slope used, but in any case, the back slope shall be no steeper than 1 foot horizontal to 1 foot vertical.

D. Dewatering:

The Contractor shall keep the excavation free from water by use of cofferdams, bailing, pumping, well pointing, or any combination as the particular situation may warrant. All dewatering devices shall be installed in such a manner as to provide clearance for construction, removal of forms, and inspection of exterior of form work. It is the intent of these specifications that the foundation be placed on a firm dry bed. The foundation bed shall be kept in a dewatered condition a sufficient period of time to insure the safety of the structure. All dewatering methods and procedures are subject to the review and

acceptance of the Engineer. The excavation shall be protected from excessive rainfall, drainage and drying. It is the intent of these specifications that the Contractor provide a relatively smooth, firm foundation bed for footings and slabs that bear directly on the undisturbed earth without additional cost to the Owner, regardless of the soil conditions encountered. The contractor shall pile excavated material in a manner that will not endanger the work.

E. Unauthorized Over Excavation:

Excavation for slabs, footings, etc., that bear on earth shall not be carried below the elevation shown on the drawings. In the event the excavation is carried on below the indicated elevation, the Contractor shall bring the slab, footing, etc., to the required grade by filling with concrete having a minimum compressive strength of at least 3,000 psi at 28 days.

B. OPEN BOTTOM WETWELL INSTALLATION:

Bottom of excavation should be compacted to 95% Standard Proctor Density. Pour reinforced concrete base one foot deep and at least two feet larger than the fiberglass wet well outside diameter. As soon as the concrete has set-up enough to support the fiberglass wet well, lower the wet well into place. Pour a minimum of one foot of reinforced concrete on the inside, also a minimum of one foot deep and two feet from the fiberglass wet well wall on the outside of the wet well. Insert ram neck type sealant on the outside of fiberglass wet well around the bottom where the fiberglass and concrete come together.

C. CUTOUTS:

Cutouts in wet well wall should be made with proper cutting tools, such as jig saw or hole saw. Do not use axe or other impact-type tools.

D. INSTALLATION OF SEWER PIPE:

A. Type1: Make the cutout in the wet well wall, the outside diameter of pipe, plus 1/2 inch maximum. Slip pipe into position. Apply industrial grade silicone around the pipe next to the wet well wall cutout on the inside and on the outside. Cover the outside siliconed area with epoxy grout and backfill.

B. Type 2: Make the cutout in the wet well wall, the outside diameter of pipe, plus 1/2 inch maximum. Grind the outside surface of the pipe and both the inside and the outside surfaces of the cutout in the wet well wall. (Apply a priming agent to any PVC pipe that might be used before fiberglass lay-up.) Insert the pipe through the cutout in the wall of the wet well. Apply fiberglass putty to the inside and the outside of the wet well wall cutout, filling openings between pipe and cutout. Make a good radius for the fiberglass lay-up. After putty has set-up, fiberglass the pipe into place. Use one layer of woven roving sandwiched between two layers of fiberglass mat. Allow fiberglass to completely set-up before backfilling. Fiberglass layup method to comply with A.S.T.M.-D3299 specifications.

C. Type 3: Install Insert-A-Tee type fitting per manufacturers instruction. (Fowler Mfg. Co., P.O. Box 767, Hillsboro, Or. 97123. PH. 503-359-5417) or approved equal.

E. CLOSED BOTTOM WET WELL INSTALLATION:

Bottom of excavation should be compacted to 95% Standard Proctor Density. Wet wells with diameters up to 54 inches and depths no greater than 12 feet, may be placed on a base of 6 inches of crushed stone. Wet wells with depths greater than 12' feet, should have a poured reinforced concrete base at least one foot deep and at least two feet larger than fiberglass wet well outside diameter. The fiberglass wet well shall be lowered into the wet concrete and brought to plumb. Pour reinforced concrete over the anti-flotation flange. The concrete shall be a minimum of one foot deep and two feet from outside wall of the wet well. More concrete may be required in high water table areas.

F. INTERNAL BOTTOM RIBS:

Wet wells with internal bottom stiffening ribs will require that concrete be poured on the inside of the wet well to a depth equal to that of the stiffening ribs. This is typically 4 – 6 inches.

G. FIBERGLASS WET WELL TOP:

The fiberglass top may have stubouts installed or may have a raised fiberglass collar around the hatch opening. The fiberglass top has been designed to withstand the weight of a concrete reinforced slab to be installed over it.

H. BACKFILL:

A. Backfill Material: Unless shown otherwise on the drawings, sand or crushed stone shall be used for backfill around the wet well for a distance of two feet from the outside surface and extending from the bottom of the excavation to the bottom of the top slab. Suitable material chosen from the excavation may be used for the remainder of the backfill. The material chosen shall be free of large lumps or clods, which will not readily break down under compaction. This material will be subject to review and acceptance of the Engineer. Backfill material shall be free of vegetation or other extraneous material. Excavated materials which are to be used for fill or backfill may be stockpiled on the site. Location of stockpiles shall be approved by the City. Top soil should be stockpiled separately and used for finish grading around the structure.

B. Schedule of Backfilling: The Contractor may begin backfilling of wet well as soon as the concrete has been allowed to cure and the forms removed.

C. Backfill Lifts: Backfill shall be placed in layers of not more than 12 loose measure inches and mechanically tamped to at least 95% Standard Proctor Density. Flooding will not be permitted. Backfill shall be placed in such a manner as to prevent any wedging action against the structure.

I. TOP SLAB SUPPORT:

When installing a fiberglass wet well without a fiberglass top you should pour a reinforced concrete slab support a minimum of two feet outside of fiberglass wet well wall and a minimum of six inches thick. The slab shall be specified and designed by engineer or precast manufacturer engaged by contractor per Contract Documents.

23.07.02 FRP MANHOLE LINER INSTALLATION

Unless shown otherwise on drawings and approved by the engineer, concrete grout shall be used for backfill between the old manhole and the new fiberglass manhole liner. The backfill around the excavated reducer section shall be stabilized sand or crushed stone. The material chosen shall be free of large lumps or clods which will not readily break down under compaction. This material will be subject to approval by the engineer.

The concrete grout backfill shall be poured in layers of not more than 12 inches in even lifts. The reducer section to be backfilled in 12-inch lifts evenly and compacted to 95% Standard Proctor Density.

23.08 SHIPPING AND HANDLING

23.08.01 FIBERGLASS WET WELL SHIPPING AND HANDLING

Do not drop or impact the wet well. Wet wells shall be chocked if stored horizontally. If wet wells must be moved by rolling, the ground transversed shall be smooth and free of rocks, debris, etc. FRP wet wells may be lifted by the installation of two lifting lugs as specified by the manufacturer on the outside surface near the top or by a sling or “choker” connection around the center. Use of chains or cables in contact with the wet well surface is prohibited. Wet wells may be lifted horizontally using one support point.

23.08.02 FRP MANHOLE LINER SHIPPING AND HANDLING

Do not drop or impact the fiberglass manhole liner. Fiberglass manhole liner may be lifted by inserting a 4″x 4″x 30″ timber into the top of manhole with cable attached or by a sling or “choker” connection around center of manhole, lift as required. Use of chains or cables in contact with the manhole surface is prohibited.

END OF SECTION

SECTION 33 – FRAC-OUT PLAN FOR SUBAQUEOUS CROSSINGS

33.01 GENERAL

A. The Contractor must implement and adhere to the Best Management Practices (BMPs) and Frac-Out Plan as outlined in this Specification Section for projects including subaqueous transmission lines installed, repaired, or replaced using horizontal directional drilling and permitted through the US Army Corps of Engineers (USACE).

B. The Contractor shall furnish all necessary equipment and provide the necessary labor to adhere to the BMPs and Frac-Out Plan procedures.

33.02 BEST MANAGEMENT PRACTICES (BMPs)

The Contractor will implement the following Best Management Practices (BMPs) to minimize the potential for adverse environmental impacts during horizontal directional drilling activities:

A. BMPs for erosion control within the staging area shall be implemented and maintained at all times during the drilling and back-reaming operations to prevent siltation and turbid discharges in excess of State Water Quality Standards pursuant to Rule 62-302, F.A.C. Methods shall include, but are not limited to the immediate placement of turbidity containment devices such as turbidity screen, silt containment fence, hay bales, and earthen berms, etc. to contain the drilling mud. Earthen berms shall not be utilized as to impact wetlands or other surface waters.

33.03 FRAC-OUT PLAN

A. Measures used to prevent frac-out during the HDD operation shall include maintaining the proper boring depth for the soil conditions along the drilling route as well as proper management of drilling fluids circulation pressure. The minimum distance between the top of the over-ream hole and surface shall be maintained according to the Contract Documents. This distance should be sufficient to prevent frac-out when drilling with controlled and monitored drill fluid pressure.

B. Non-toxic fluorescent dyes will be added to the drilling lubricant as a method for monitoring bentonite releases in the underwater portions of this drilling. Details of the fluorometry monitoring method shall be submitted to the USACE prior to the pre-construction meeting

C. Drilling fluid returns (flow of drilling fluids to the HDD entry/exit pit location) will be continuously monitored visually during the installation.

D. The volume and circulation pressure of drilling fluid in the HDD bore and over-ream shall be monitored at all times during the HDD operation. The HDD drill rig operator will monitor the downhole annular pressure at all times. Should a drop in volume occur, immediately conduct a visual inspection of both terrestrial and pavement portions of the HDD corridor. A visual inspection of all project area and adjacent waterbodies, and storm and sanitary sewer systems shall also be conducted.

E. Should the detection of dye or a drop in volume of bentonite occur, the Contractor will follow the Release Procedures outlined below.

F. All drilling fluids associated with the HDD operation shall be contained onsite. The volume of the drilling fluids recirculation/solids settlement pit and onsite storage/frac tanks and watertight roll-off containers shall be submitted for review by the Engineer. As required during the HDD process, screened solids and surplus drilling fluid will be removed and disposed of off the project site at a location of the HDD Contractor's choice in accordance with applicable regulations. At the conclusion of all drilling operations, drilling fluid remaining in the pit will be settled, removed completely from the pit, and hauled to a disposal site of the HDD Contractor's choice in accordance with applicable regulations within 48 hours of the pipe pull-in. After back-reaming, drilling materials will be removed from the inside of the pipeline by pigging it from the exit point towards the rig area. The paved and/or vegetated surface of the disturbed pit area shall be restored according the Contract Documents.

G. At all times, adequate protection will be taken to avoid impacts to pavement, structures, and Aquatic Preserve/Outstanding Florida Waters and contiguous wetlands. This shall include, but is not limited to halting of construction/drilling and/or placement of turbidity containment devices in accordance with the applicable regulations.

H. A pump tanker or vactor truck shall be onsite and available at all times. The Contractor shall demonstrate the contracted availability of additional pump tankers and/or vactor trucks if needed for surplus or frac-out drilling fluids.

I. A spill kit (i.e., absorbent pads/brooms, shovels, goggles, gloves) shall be onsite and available at all times.

33.04 RELEASE PROCEDURE

A. If a frac-out is confirmed, all construction activity contributing to the frac-out shall cease immediately.

B. If the return drilling fluid is less than the projected amount to be recovered, divers shall begin a search for the missing material within 1 hour of potential release if the drilling takes place under a body of water. Once the drilling fluid and frac-out is located, then the drilling mud containment plan shall be immediately implemented.

C. The Contractor shall notify the City upon confirmation of the occurrence. The notification shall include the time of the frac-out, location and impact on pavement and improvements, and the environmental conditions of the impacted area.

D. If a frac-out has occurred during construction activities, the Contractor shall coordinate with the City in order to notify the USACE of Engineers, within 24 hours of the occurrence. The notification shall include the time of the frac-out, the response time of the underwater diver, and the environmental conditions of the affected area.

F. If the loss of drilling fluid or excess fluid pumping/recirculation pressure results in the heaving and/or settlement of pavement, curb, sidewalk and/or other infrastructure, the HDD Contractor shall immediately mobilize all equipment, manpower and devices to recover the drilling fluid, relieve the fluid pressure, stop any heaving or settlement of infrastructure and protect the public. The HDD Contractor shall prepare a remediation plan to repair, replace, or restore the affected infrastructure in accordance with the governing jurisdiction's standards, reviewed for approval prior to implementation.

G. Before continuing with the HDD operation, the HDD Contractor shall prepare and submit for approval a revised plan for successful completion of the required project. The plan shall identify the manpower, equipment, drilling fluid, additives, pump pressures, original bore hole sealing, and bore path modifications that may be required.

33.05 DRILLING MUD CONTAINMENT PLAN

A. Should the release of drilling materials occur on land, a sediment fence shall be constructed around the site and the material shall be removed by vacuum truck.

B. Should the release of drilling materials occur in-water, clean-up with a vacuum system shall commence within 24 hours.

C. The scientist/biologist underwater divers will guide the suction hose of the pump to minimize both the removal of natural bottom material and the disturbance of any existing vegetation.

D. Any escaped drilling lubricant must be pumped into filter bags or directly into a vactor truck.

E. A barge company will be contacted to transport a vactor truck should it be needed to respond "in-water."

F. Once the spill is contained, the escaped drilling lubricant shall be properly disposed of in an approved upland disposal site.

G. Clean-up with a vacuum system shall commence within 24 hours.

H. After containment/recovery of the drilling material/resources, the HDD Contractor shall prepare a detailed written report to be submitted to the City and USACE, within 10 business days, that summarizes the incident, including the following:

1. Details on the release event, including an estimate of the bentonite released;
2. The location and time of release;
3. The size of the area impacted, and the success of the clean-up action;
4. Name, firm, address and telephone number of HDD Contractor reporting;
5. Photos and/or digital recording of frac-out area and impacts;
6. Date and Time;
7. How the release occurred;
8. The type of activity that was occurring around the area of the inadvertent return;

9. Description of any sensitive areas and their location in relation to the inadvertent return;
10. Description of the methods used to clean up or secure the site;
11. Changes to the drilling fluid properties or drilling process (if any); and
12. Mitigation of any impacted public utility infrastructure and water bodies from the frac-out

END OF SECTION

SECTION 34 –MANHOLE INSPECTION

34.01 SCOPE OF SERVICES

A. The Contractor shall perform visual inspections of the existing manholes and record any defect discovered. The visual inspection shall include surface photo, manhole cover and frame, chimney, walls, invert, and all appurtenances.

B. The nature of the inspections shall be to verify the physical condition of the manhole and to provide a permanent record of the existing condition as it relates to dimensions, materials, obstructions, breakage, connections, and deterioration. Inspections may be performed by personnel entry or from the surface utilizing pole mounted camera equipment to visually inspect the chimney, cone, wall, bench, pipe seals and invert conditions, and conditions of connecting pipes.

C. All City assets will be identified using the established facility identification code (FID) for all inspection reports, geographical exhibits, data sets and asset management tasks. Assets may include, but not be limited to, manholes, clean outs, gravity mains, force mains, air release valves, and conflict structures. Asset FIDs will be provided to the Contractor prior to the start of inspection. Failure to utilize the FID could result in additional inspection at the Contractors expense.

34.02 REQUIREMENTS

A. The Contractor shall inspect the manhole surroundings and the manhole interior using visual means and a digital camera for documentation.

B. All inspections shall be recorded.

C. All inspection forms shall be scanned and submitted as .PDF files.

D. All inspection data shall be entered into a NASSCO Manhole Assessment Certification Program (MACP) compliant database per Specification Section 20 “CCTV Inspection and Pipe Cleaning”.

E. The inspection photographs, report documents, and inspection database shall be in accordance with the specifications and NASSCO MACP.

F. Contractor shall maintain a copy of all report materials. The Contractor shall provide comments as necessary to fully describe the existing condition of the manhole on the inspection forms.

G. Contractor shall be responsible for modifications to equipment and/or inspection procedures to achieve City report requirements.

H. No Work shall commence prior to approval of the submitted materials by the City. Once accepted, the report materials shall serve as a standard for the remaining work.

34.03 QUALITY ASSURANCE

A. Use of PACP/MACP certified technicians to review/document defects in the office (post process) is acceptable.

B. The CCTV Contractor must have an internal quality assurance/quality control (QA/QC) program in place and all inspection data shall be subjected to the procedures prior to submittal to the City. The City will perform QA/QC audits on submitted data.

A QA/QC shall be performed by NASSCO MACP and PACP certified personnel.

34.04 SHOP DRAWINGS AND SUBMITTALS

A. Submittals shall be submitted to the City for review and acceptance prior to construction in accordance with Specification Section 03 -Submittals.

B. The above deliverables shall be submitted to the City for approval.

C. The manhole inspection reports and database shall be in accordance with the specifications and NASSCO MACP.

34.05 NOTIFICATION

The Contractor shall notify the City a minimum of 48-hours prior to performing any inspection work. The City may be present during part or all of the inspections. No payment will be made for inspections performed without proper schedule notification

34.06 EXECUTION

A. The inspection crew shall mobilize to the site of the manhole inspection and immediately establish traffic control measures per City of St. Pete Beach and Florida Department of Transportation (FDOT) requirements as well as any measures required to protect pedestrians. The crew shall inspect each manhole and record required information.

B. All manhole structures shall be located. Metal detectors shall be used to locate buried manholes. Once a buried manhole has been located, it shall be marked with paint and/or flagging, if necessary. All pertinent information available shall be recorded including area photo, address, etc. Contractor shall notify the City weekly with a list of those manholes that could not be fully inspected due to access issues. The City may arrange to have some or all these manholes exposed, or otherwise

made accessible for full inspection. The City will notify Contractor of the status and may authorize re-inspection.

34.07 MANDATORY INSPECTION HEADER INFORMATION

Once the manhole is located, the following mandatory information shall be recorded on the inspection form. Note that the mandatory fields noted below are more inclusive than the MACP requirements. All available information shall be collected and recorded for those manholes that are buried, could not open, surcharged, etc.

1. Manhole Number (City of St. Pete Beach Asset Number)
2. Sheet number
3. Date
4. Time
5. Surveyor's Name
6. Certifications Number
7. Drainage area (tributary Pump Station Number)
8. Location (street number and name)
9. Downstream pipe length (feet)
10. Rim to grade (nearest 0.1 foot)
11. Pre-cleaning method (using approved MACP codes)
12. Location code (using approved MACP codes)
13. Manhole surface type (using approved MACP codes)
14. Potential for runoff (using approved MACP codes)
15. Access point type (using approved MACP codes)
16. Inspection status (using approved MACP codes)
17. Area photo image reference Internal photo image reference

34.08 MANHOLE COMPONENT OBSERVATIONS

The inspection crew shall complete all fields within the manhole component/observation section of the inspection form. The following information shall be collected:

1. Cover type (solid, vented, bolted)
2. Cover size (top surface diameter in inches)
3. Cover material
4. Number of vent holes
5. Cover/Frame fit (cover to frame fit, MACP codes)
6. Cover condition (MACP codes)
7. Cover insert type
8. Cover insert condition
9. Frame condition
10. Frame seal condition
11. Frame offset distance
12. Frame seal inflow
13. Wall material

14. Interior wall coating
15. Wall diameter
16. Bench present
17. Channel installed
18. Additional remarks relevant to the manhole

34.09 MANHOLE INTERIOR INSPECTION

The inspection crew shall determine the types of defects within the manhole, document each defect on the manhole form and take a photograph of each defect. The manhole chimney, cone, wall, bench, and channel shall be inspected for structural integrity, signs of I/I and the presence of roots. All documentation shall follow NASSCO MACP standards. Each defect will be documented on the inspection form with the following information:

1. Defect number
2. Component of manhole containing defect
3. Defect code (using approved MACP codes)
4. Image Reference (using City approved file naming structure)

34.10 CONNECTING PIPE DETAILS

Each pipe entering and exiting the manhole shall be photographed where possible and inspected to determine diameter, pipe material, debris levels, and rim to invert distance (to 0.1-feet). The pipe inspection will include the following information:

1. Pipe photo (using City approved file naming structure)
2. Pipe direction (incoming or outgoing)
3. Pipe clock positions (6:00 position = outgoing)
4. Pipe diameter
5. Pipe material (using PACP codes)
6. Rim to invert distance (measured to nearest 1/10th of a foot)
7. Pipe special condition (drops, force mains, etc. using approved MACP codes)
8. Debris depth
9. Connecting structure number; if manhole or cleanout, service line clock position, stub-out clock position, etc.
10. Pipe seal condition (using approved MACP codes)
11. Pipe seal roots (using approved MACP codes)
12. Observed pipe defects, obstructions, roots, etc. (using PACP codes)

34.11 MANHOLE SKETCH, MAP UPDATE, AND NOTES

The inspection crew shall complete the manhole plan view sketch noting all connecting pipes. Any special observations or notes may be added to the profile sketch on the field form. Influent and effluent lines in each manhole shall be compared to the existing map and corrections noted in the sketch section of the field form.

34.12 NOTIFICATION OF EMERGENCY CONDITIONS

Inspection crews shall immediately notify the City and/or on-site inspector of any defects posing imminent danger to the public (missing lids, covers broken during inspection, sink holes, etc.) and any observed pipe blockages or potential overflow conditions.

34.13 COMPLETION

Once the inspection is complete the field crew shall make certain the ring is clean and does not have any debris preventing a proper cover fit. The manhole lid shall be replaced, and any displaced items moved back into place.

A list of manholes that could not be fully inspected, along with the problem explanation, shall be forwarded to the City weekly throughout the inspection work. If the Contractor has completed accessible inspections, and the City authorizes, then Contractor may be required to re-mobilize at the same unit price and complete the requested inspections. All re-inspections will be at the same contracted unit price. Any map updates shall be consolidated and forwarded to the City with the submitted inspections.

34.14 PHOTOGRAPH REQUIREMENTS

A. During each inspection the following series of photographs shall be taken:

1. Photograph: During the inspection, a photograph shall be taken of the manhole cover showing location within the roadway, shoulder, or easement as appropriate. Photographs shall be taken of any indications of previous overflows such as watermarks and paper or other debris typical of sewer overflows. Surface photographs shall be oriented in the direction of the outgoing pipe to show the pipeline cover and easement condition. The area photographs should show the manhole visible in the foreground where possible. A minimum of 1 area photo is required.
2. Internal Photograph: Take a photograph of the manhole interior in plan view showing the general arrangement of the incoming and outgoing sewers, manhole walls, and other appurtenances. The internal condition photograph shall be oriented with the direction of the outgoing main line flow at the bottom of the photograph (6:00 position). A minimum of 1 internal photograph is required.
3. Manhole Defect Photographs: During manhole inspections digital photographs shall be taken of all defects. Photographs must clearly and accurately show each defect and correspond to defects and photo numbers logged on the manhole inspection form. A minimum of 1 photo for each observed defect is required
4. Connecting Pipe Photographs: The camera should then be pointed into all incoming and outgoing pipes where possible to capture general conditions within the pipes. Any obvious blockages or defects should be noted using

PACP defect codes. A minimum of 1 photo of each incoming or outgoing pipe is required.

B. During inspections manholes shall be free of steam, fog, water vapor, or other conditions that will impact the quality of photographs.

C. All photographs shall adequately capture the manhole conditions and details of defects. Lighting and camera quality shall provide a clear, in-focus picture of the manhole interior, manhole defects, and manhole. The lighting shall provide uniform light free from shadows or hot spots.

D. If larger than 640 x 480 resolution, then photo will be converted to 640 x 480. Photos less than 640 x 480 are not acceptable and converting upward to 640 x 480 is not acceptable. All photographs shall be resized to 640 x 480 resolution to minimize file size.

E. The images shall be kept electronically, copied to a CD, DVD, or external hard drive. Photographs shall be named according to the photograph naming conventions included herein.

F. All digital photographs shall be referenced on the manhole inspection form and electronic database.

G. All digital photographs shall be renamed in accordance with a photo file naming convention. An example is shown below:

1. Area Photo = Manhole ID, A, Photo Number, jpg
   Example: 3965002A0001.jpg
   Manhole: 39650002
   A=Area Photo
   Photo No.0001
2. Internal Photo = Manhole ID, I, Photo Number, jpg
   Example: 3965002I0001.jpg
   Manhole: 3965002
   I=Internal Photo
   Photo No.0001
3. Manhole Defect Photo = Manhole ID, M, Photo Number, jpg
   Example: 3965002M0015
   Manhole: 3965002
   M=Manhole Defect Photo
   Photo No. 0015
4. Pipe Photo = Manhole ID, P, Photo Number, jpg
   Example: 3965002P0002.jpg
   Manhole: 3965002
   P=Pipe Photo
   Photo No. 0002

34.15 MANHOLE NUMBERING, FORMS, AND DEFECT CODES

The Contractor shall use the City manhole numbering system when performing the inspections for this Project. Manhole numbers will be provided by the City. Defect codes shall conform to those specified in the NASSCO MACP specification.

All City assets will be identified using the established facility identification code (FID) for all inspection reports, geographical exhibits, data sets and asset management tasks. Assets may include, but not be limited to, manholes, clean outs, gravity mains, force mains, air release valves, and conflict structures. Asset FIDs will be provided to the Contractor prior to the start of inspection. Failure to utilize the FID could result in additional inspection at the Contractors expense.

34.16 SITE RESTORATION

After inspecting manholes in an area, the work site shall be cleaned and restored to pre-Work conditions. If manhole is buried and exposed, then restore site by placing material back over exposed manhole. No re-sodding is anticipated or included in the pricing.

34.17 DELIVERABLES

The Contractor will be required to submit the following deliverables at the completion of inspection.

A. During each inspection the following series of photographs shall be taken:
   1. Inspection session header information (see required fields above)
   2. Component observations
   3. Manhole inspection details including defects observed and photo image references
   4. Connecting pipe details
   5. Manhole plan view sketch

B. Marked up field maps detailing map corrections and/or discrepancies noted during inspection.

C. Inspection digital photograph in City approved format and resolution and assigned file names in accordance with the City standard during each inspection the following series of photographs shall be taken.

D. All information and reports shall be exported to the electronic database described in technical specification Section 34.02.

END OF SECTION

THIS PAGE INTENTIONALLY LEFT BLANK

SECTION 35 – CHEMICAL SEALING OF HOST PIPE AND SERVICE CONENCTIONS

35.01 GENERAL

The Work in this section includes furnishing all labor, materials, tools, and equipment for reducing infiltration within the host pipe and service connections to an acceptable level prior to liner installation to ensure that placement and curing is not adversely affected by the presence of excessive infiltration and seal annular space between liners and host pipes at service lateral connections. Accordingly, the Engineer will base acceptance of this portion of the Work on the reduction of infiltration at host pipe joints and other defects to a level that will insure completion liner installation in accordance with these specifications.

Contractor shall furnish all labor, materials, equipment, and incidentals to seal active infiltration at host pipe joints, service lateral connections, and other defects as directed. Sealing shall be from inside the host pipe using a device equipped with a pan and tilt camera and inflatable packer as described herein.

35.02 PRODUCTS

A. Sealing Materials

1. The sealing compound shall be Acrylic base gel -Avanti AV-100, AV-1 18, Urethane base gel — Avanti AV-350 or Acrylate base gel- Deneff AC-400 or approved equal and shall be suitable for use in domestic wastewater collection systems. Handling, formulation and storage of the sealing gel compound shall be in strict conformance with the manufacturer's recommendations. The uncured gel shall be delivered to the site in unopened containers, with the date of manufacture clearly indicated, no uncured gel manufactured more than six months prior to the date of application shall be utilized. Residual sealing materials shall be removed from the wastewater collection system after injection to ensure no flow reductions, restriction or blockage occur.

2. Icoset additive shall be added to the sealing compound for gel strengthening. The quantity of Icoset additive will be according to the manufacturer recommendation. The sealing compound admixture shall be adjusted to meet specified viscosity and reaction time.

35.03 SUBMITTALS

A. The Contractor shall submit the following to the Engineer in accordance with Specification Section 03 - Submittals

1. Gel compounds
2. Installation equipment

35.04 EQUIPMENT

A. General

1. Sealing equipment shall consist of two separate pumping systems capable of supplying an uninterrupted flow of sealing materials to completely fill the voids. Pumps, fittings and hoses shall be designed to transport a high viscosity material and shall not be affected by acetone or ketone solvents.

2. Sealing materials shall pass from the pumping system through instant reading, controlled flow meters and then through a dual hose system into the sealing device. The device (referred to hereafter as a packer) shall be a cylindrical case of a size less than pipe size, with the cables at either and used to pull it through the host pipe.

3. Generally, the equipment shall be capable of performing the specified operations in pipes where flows do not exceed 25 percent without resorting to any method of flow control.

4. Air impervious inflatable sleeves shall be mounted over the cylinder with the ends of the sleeve sealed to the ends of the casting. The sleeves shall be so constructed that they can be pneumatically expanded from the center to both ends. The center portion of the sleeve shall be sealed to the casing by a broad confining band. When the packer is inflated. Two widely spaced annular bladders shall be formed, each having an elongated shape and producing an annular void around the confined portion of the sleeve. No sealing device which is expanded mechanically nor where the expansion sleeve is not continuous will be allowed in order to prevent damage to the pipe from excessive amounts of sealing pressures or air leakage in the center area of such sealing device. The sleeve shall be a low void packer.

5. Lateral service sealing is accomplished with a "Logiball" lateral packer. The objective of the lateral service packer is to seal the lateral service connection to the main pipe and the first 18-inches of the service lateral.

35.05 EXECUTION

A. General

Sealing shall be by the pressure grout method. Generally, this shall be accomplished by forcing chemical sealing gel materials through a system of pumps and hoses into and through the joints and other defects of the host or lateral pipe from the packer within the pipe. Jetting or driving pipes from the surface that could damage or cause undermining of the wastewater system shall not be allowed.

B. Grout Mixing

1. The Contractor shall mix all grout at the job site in the presence of the Engineer. No grout will be used on the job which has been mixed off site and is in the Contractor’s

tank when the truck drives on site. The Contractor's personnel shall follow the manufacturer's recommendations for the mixing and safety procedures to protect personnel from any adverse effects of the grouting compounds. Powder and additives shall be added and mixed at rates, which will minimize the formation of lumps within grout tanks solutions. All additives will be thoroughly mixed in the grouting component tanks.

2. Prior to application of grout for seal purposes. a pump test will be performed to determine if equal quantities of grout are being pumped from the grout component tanks. Separate containers shall be used to capture the discharges from the grout component tanks. One gallon of grout shall be pumped, and the pump strokes shall be counted. If unequal quantities are being pumped, the Contractor shall take corrective action. The pump test shall be repeated until equal quantities are pumped from the grout tanks.

3. During the grouting process, the Contractor shall monitor the grout component tanks to make sure that equal quantities are being pumped. If unequal levels are noted in the tanks. the pump test shall be repeated as described above. At the beginning of each day, when new batches of grout are mixed and when grout additives are modified to change gel times, a test shall be performed with quantities of grout to determine the grout mixture gel time. The Contractor shall have accurate scale(s) which shall be used to weigh the various non water grout solution components.

C. Host Pipe Sealing by Pressure Grout Method

1. The packer shall be positioned over the area of infiltration by means of a measuring device at the surface and the closed circuit television camera in the pipe. Accurate measurement of the location of the defect to be sealed shall be made, using a portion of the packer as a "Datum" of measurement point or target. Such measurement, target or point shall also be used to obtain necessary measurement for positioning injection area of packer over the area to be sealed.

2. The packer sleeves shall then be pneumatically expanded and shall seal against the inside periphery of the pipe to form a void area at the joint or defect now completely isolated from the remainder of the pipe segment.

3. Into this isolated area sealant materials shall be pumped through the hose system at controlled pressures, which are in excess of groundwater pressures. The pumping, metering and packer shall be integrated so that proportions and quantities of materials and pressures for materials and sealing gel can be instantly monitored and regulated in accordance with the type and size of the leak, percentage of voids being filled, type of soil surrounding the pipe and the rate of flow of the sealing gel solution in relation to the back pressures. These parameters should follow the manufacturer's specifications and guidelines.

4. Upon completion of the injection, the television camera shall be moved to a position to observe and inspect the results of the injection. If inspection shows the seal was

not effective, the process shall be repeated until infiltration has been reduced to an acceptable level for liner installation.

5. The packer shall be moved forward, wiping away the excess grout. The excess sealing material removed from the joint by the grouting equipment shall be flushed or pushed forward to the next downstream manhole, removed from the wastewater system and disposed of by the Contractor as specified by disposal of debris resulting from cleaning operations. in no case shall excess grout material be allowed to accumulate and be flushed down the system.

6. it is intended that chemical sealing shall be performed on host pipe immediately prior to the installation of the liner unless otherwise authorized by the Engineer. The Contractor shall notify the City Inspector a minimum of 48 hours prior to commencing Chemical sealing operation. The quantity of grout used shall be verified by the City Inspector.

7. Any part of the wastewater system damaged as a result of the Contractor's operations shall be promptly repaired by, and at the expense of, the Contractor.

8. All activities shall be video inspected during the sealing operation. The video shall be submitted to the Engineer for review and for permanent record. The video inspection shall comply with the requirements of the Technical Specification Section headed "Closed Circuit Television Inspection".

D. Lateral Service Sealing by Pressure Grout Method

1. Air testing laterals shall be accomplished by isolating the area to be tested with the lateral service packer and by applying positive pressure into the isolated void area. A pan and tilt camera shall be used prior to positioning the lateral packer. A sensing unit shall be used for continuous monitoring of the void pressure. This sensing unit shall be located within the void area and will accurately transmit continuous pressure readout to the control panel.

2. Joint testing and grouting for laterals will utilize a "Logiball" type system. The packer ends (end elements, sleeves) shall be expanded using controlled air pressure. The expanded ends shall seal against the inside periphery of the pipe to form a void area at the lateral, now completely isolated from the remainder of the pipe segment. Into this isolated area, sealant materials shall be pumped through the hose system at controlled pressures that are in excess of groundwater pressures. The pressure device shall accurately show psi to the nearest one tenth (0.1) pound and shall instantly respond to and record any change in the void pressure. The joint shall be tested with a gauge pressure of one-half psi per foot of depth of lateral pipe as measured by the deeper of the two manholes between which the lateral is located, or a minimum of 4 psi, whichever is larger. The pumping unit, metering equipment, and the packer device shall be designated so that proportions and quantities of materials can be regulated in accordance with the type and size of the leak being tested or sealed, percentage of voids being filled, type of soil surrounding the pipe and the rate of flow of the sealing gel solution in relation to the back pressures.

These parameters should follow the manufacturer's specifications and guidelines and be reviewed with the Engineer prior to the beginning of any grouting activities.

3. The test procedure will consist of applying air pressure into each isolated void area. To isolate a void, a lateral sealing packer shall be positioned straddling the lateral. The operator shall insert an inflatable inversion tube and inflate the packer ends to isolate the lateral. Once the designated pressure in the isolated void is displayed on the meter of the control panel, the application of air pressure will be stopped and a thirty-second waiting period will commence. The void pressure will be observed during this period. If the void pressure drop is greater than that allowed in the following Air Test Table, the lateral shall be considered to have failed the air test and shall be grouted as specified herein.

Air Test Table

Initial Void Pressure (psi)	Void Pressure After 30 Seconds
12-11	4.8-4.4
11-10	4.4-4.0
10-8	4.0-3.6
9-8	3.6-3.2
8-7	3.2-2.8
7-8	2.8-2.4
6-5	2.4-2.0

4. After completing the air test for each individual lateral specified herein, the lateral packer shall be deflated, with the void pressure meter continuing to display void pressure. If the void pressure does not drop to approximately zero, the equipment shall be adjusted to provide a zero void pressure reading at the monitor.

5. An air pre-test is not required for lateral sealing of service connections in main pipes that have been lined, as lateral sealing is required regardless of air test results. Pre and post-tests, and quantity of grout pumped shall be logged.

6. lateral sealing begins if the lateral does not pass the air test as described above. The lateral packer shall remain in position, thus maintaining the isolated void. Chemical grout sealant will be pressure injected through the lateral packer into the annular space between the inversion tube and the lateral pipe. Under pressure, the grout material shall be then forced out into the soil through leaking joints and pipe defects. The amount of chemical grout pumped is based on the number of pump strokes delivered to each lateral. The number shall be recorded on the sealing log.

7. Upon completion of the lateral sealing procedure, the lateral shall be air tested to verify the sealing of the connection. The air test will be the same as outlined above. If the sealed lateral fails the air test, the grouting procedure shall be repeated at no additional cost to the City. This sequence of air testing, grouting and subsequent air testing shall be repeated until either the lateral is sealed or it is determined that the grout consumption is too high and may result in the blockage of the lateral pipe. The final determination to stop subsequent attempts to seal a lateral will be made jointly

between the Engineer and the Contractor.

8. The Contractor shall verify lateral flow after the successful sealing of each lateral. With the lateral packer in position, the inversion tube shall be retracted and air pressure injected into the lateral. Should a pressure build in the lateral and not drop to zero in a few seconds, the packer will be moved off the connection and the connection shall be viewed with a television camera. With the camera viewing the connection point, an attempt will be made to obtain a water flush by the occupant. If no water is viewed during this procedure, it shall be assumed that the building service connection is blocked with grout and the responsibility to clear the lateral will be the Contractor's at no additional cost to the City.

9. The Contractor shall attach a notification form to the door of each home or building for which laterals have been grouted. This notification to the occupant shall state the following:

   The lateral service connection to (address) _____was grouted on (date) _____

   If any blockage of wastewater flow occurs, please call (emergency number)

   Any blockages that occur as a result of the lateral sealing operations will be cleared by the Contractor.

10. All activities shall be video inspected during both the air testing and sealing operation. The video shall be submitted to the Engineer for review and for permanent record. The video shall display at a minimum the date, manhole numbers, footage to the lateral, and void pressure readout. In addition, the data obtained during this operation shall be recorded on a lateral testing and sealing log provided by the Contractor. The log shall specify conditions of each service lateral sealed, break-in-service connection, lined pipe, etc.

E. Cleanup

Residual sealing materials that extend into the pipe, reduce the pipe diameter, or restrict the flow shall be removed and disposed of by the Contractor at an approved site. Sealed joints shall be left reasonably “flush” with the existing pipe surface. Excessive residual sealing materials in the system shall be cleaned to remove the residual materials.

F. Disposal

Furnish equipment for collection of cleaning solvents used in the cleaning of the sealing equipment. Collected solvents shall be disposed of by an approved solvent recovery process. Disposal of cleaning solvents into the wastewater system or into natural watercourses will be strictly prohibited.

G. Wastewater Flow Controls

When wastewater flows are above the minimum requirements or inspection of the complete periphery of the pipe is necessary to effectively conduct the inspection and sealing operations, one or more of the following methods of flow control shall be used.

1. A plug shall be inserted into the pipe at a manhole upstream from the section to be inspected and/or sealed. The plug shall be so designed that all or any portion of the wastewater flows can be released. During the inspection portion of the operation, flows shall be shutoff or substantially reduced in order to properly inspect the pipe at the invert. After the inspection is complete, flows shall be restored to normal or not more than 1/4 of the pipe diameter during the sealing operation. The Contractor will be responsible for preventing backups and overflows.

2. Where pumping is required, in the opinion of the Engineer, to assure completion of the inspection and sealing work, the Contractor will be required to furnish pumping and bypassing equipment. Refer to the requirements of Specification Section 16 ”Bypass Pumping” or Specification Section 01 "General”.

END OF SECTION

THIS PAGE INTENTIONALLY LEFT BLANK

SECTION 36 – REMOVAL OF PROTRUDING SERVICE CONNECTIONS

36.01 GENERAL

The Work in this section includes furnishing all labor, materials, tools, and equipment for internally removing and sealing protruding service connection taps and excess mortar in wastewater pipe segments scheduled to be rehabilitated.

Remove only those taps that protrude sufficiently as specified herein which are determined to interfere with the pipe rehabilitation. The intent is to remove the minimum number of protruding taps necessary to allow the entire pipe segment to be rehabilitated.

The Contractor shall maintain wastewater flows, including pump around pumping, as required at all times during the performance of this work.

The Contractor shall remove all dirt and debris caused by tap removal. Excess material will not be allowed to enter the wastewater system and carried to downstream reaches.

The Contractor is advised that this Contract requires work in active wastewater collection systems and shall follow all federal, state and local requirements for safety in confined spaces. The Contractor shall conform to all guidelines by the Occupational Safety and Health Administration (OSHA) Federal Regulations; 29 CR Ch. XVII, Section 1910.146 Confined Space Entry.

36.02 PRODUCTS

A. Equipment

1. Protruding taps shall be removed using an internal, remote-controlled intruding pipe remover. Excavation and replacement of protruding taps will not be allowed except under special situations authorized in writing by the Engineer.
2. The equipment shall consist of a main body containing a rotating head assembly equipped with carbide cutting edges. The rotating cutting head shall be driven by air or by electricity and shall be capable of cutting concrete, vitrified clay pipe or other materials commonly used for pipe construction with the exception of cast iron or steel.
3. The equipment shall be self-propelled or pulled through the pipe using winches and a cable set up between adjacent manholes.
4. The equipment shall be positioned using a TV camera in conjunction with the cutter assembly.

36.03 EXECUTION

A. Performance

1. The Contractor shall remove all service taps specified herein that inhibit pipe segment rehabilitation methods. The Contractor is required to remove protruding

taps to the point where they are flush with the inside wall of the pipe.

2. The Contractor shall maintain a complete record of all taps that were removed and furnish two (2) copies of this record at the completion of this work.
    a. The list shall show the Work Order Number, date, street, and pipe segment (by manhole numbers), station and location (left, right and top) of each tap removed.
    b. The list shall also show similar data for any taps that were not successfully removed, as well as the reason why removal was unsuccessful.
3. The Contractor shall protect existing main pipe and service laterals from damage caused by improper use of the equipment. Damage to a main pipe or service lateral caused by removal of a tap shall be repaired immediately, as directed by the Engineer, at the Contractor's expense. Any increase in infiltration at the service connection caused by the Contractor's removal of the protruding tap shall be chemically sealed by the Contractor at no additional cost to the City, in accordance with the Technical Specification Section headed "Chemical Sealing of Service Connections".
4. The Contractor shall remove all dirt and debris from the wastewater system following completion of tap removal.

B. Inspection

1. Contractor shall televise protruding service connection tap prior to removal, recording location and footage to service connection. Following successful completion of removal, Contractor shall perform post-construction television inspection.
2. Post-cleaning and post-rehabilitation television inspections shall be recorded on the same video as specified in the Technical Specifications Section headed "Closed Circuit Television Inspection." Video and data shall be submitted to the Engineer. Video and data shall become the property of the City.

END OF SECTION

SECTION 37 – WASTEWATER STRUCTURE REHABILITATION

37.01 GENERAL

The Work in this section includes furnishing and installing wastewater structure components and coatings for rehabilitation, structural enhancement, and corrosion protection of existing wastewater manholes, for the various diameters listed on the Bid Form. Wastewater structures include, but are not limited to, manholes, vaults, junctions, and wet wells.

The Contractor shall furnish all materials, labor, equipment, and services necessary for wastewater manhole component replacement and coating installation including: traffic control, bypass pumping and/or diversion of wastewater flows, void repair, inflow/infiltration elimination, surface preparation, structure component and coating installation, testing, surface restoration, and cleanup of the Work site.

37.02 GOVERNING STANDARDS

The following Standards are referenced in this section:

ASTM	C 109	"Standard Test Method for Compressive Strength of Hydraulic Cement Mortars"
ASTM	C 157	"Standard Test Method for Length Change of Hardened Hydraulic-Cement, Mortar, and Concrete"
ASTM	C 293	"Standard Test Method for Flexural Strength of Concrete (Using Simple Beam With Center-Point Loading)"
ASTM	C 307	"Standard Test Method for Tensile Strength of Chemical-Resistant Mortar, Grouts, and Monolithic Surfacing"
ASTM	C 308 Modified	"Standard Test Method for Working, Initial Setting, and Service Strength Setting Times of Chemical-Resistant Resin Mortars"
ASTM	C 309	"Standard Specification for Liquid Membrane-Forming Compounds for Curing Concrete"
ASTM	C 321	"Standard Test Method for Bond Strength of Chemical-Resistant Mortars"
ASTM	C 496	"Standard Test Method for Splitting Tensile Strength of Cylindrical Concrete Specimens"
ASTM	C 531	"Standard Test Method for Linear Shrinkage and Coefficient of Thermal Expansion of Chemical-Resistant Mortars, Grouts, Monolithic Surfacing, and Polymer Concretes"

ASTM	C 579	"Standard Test Methods for Compressive Strength of Chemical-Resistant Mortars, Grouts, Monolithic Surfacing and Polymer Concretes"
ASTM	C 596	"Standard Test Method for Drying Shrinkage of Mortar Containing Hydraulic Cement"
ASTM	C 580	"Standard Test Method for Flexural Strength and Modulus of Elasticity of Chemical-Resistant Mortars, Grouts, Monolithic Surfacing, and Polymer Concretes"
ASTM	C 666	"Standard Test Method for Resistance of Concrete to Rapid Freezing and Thawing"
ASTM	C 882	"Standard Test Method for Bond Strength of Epoxy-Resin Systems Used With Concrete By Slant Shear"
ASTM	C 905	"Standard Test Methods for Apparent Density of Chemical-Resistant Mortars, Grouts, Monolithic Surfacing, and Polymer Concretes"
ASTM	D 543	"Resistance of Plastics to Chemical Reagents"
ASTM	D 638	"Tensile Properties of Plastics"
ASTM	D 695	"Compressive Properties of Rigid Plastics"
ASTM	D 790	"Flexural Properties of Unreinforced and Reinforced Plastics"
ASTM	D 1622	"Standard Test Method for Apparent Density of Rigid Cellular Plastics"
ASTM	D 1623	"Standard Test Method for Tensile And Tensile Adhesion Properties of Rigid Cellular Plastics"
ASTM	D 2126	"Standard Test Method for Response of Rigid Cellular Plastics to Thermal and Humid Aging"
ASTM	D 2584	"Volatile Matter Content"
ASTM	D 2842	Standard Test Method for Water Absorption of Rigid Cellular Plastics"
ASTM	D 3846	"Standard Test Method for In-Plane Shear Strength of Reinforced Plastics"

ASTM	D 4258	"Standard Practice for Surface Cleaning Concrete for Coating"
ASTM	D 4259	"Standard Practice for Abrading Concrete"
ASTM	D 4541	"Standard Test Method for Pull-Off Strength of Coatings Using Portable Adhesion Testers"
ASTM	D 4787	"Standard Practice for Continuity Verification of Liquid or Sheet Linings Applied to Concrete Substrates"
ACI	503	"Use of Epoxy Compounds with Concrete"
SSPC/ NACE	SP-13/ NACE 6	"Surface Preparation of Concrete"

37.03 DEFINITIONS

A. Coating Systems: includes surface description, surface preparation, required dry film thickness, and the number and application procedure of the prime and finish coatings. Systems are defined and identified in the article headed "Coating System Specification Sheets" in this Section of the Technical Specifications.

B. Field Coating: the application of the coating system in an existing manhole or structure.

C. Dry Film Thickness (DFT): the thickness of a fully cured coating or coating system.

D Wet Film Thickness (WFT): the thickness of a coating while wet.

E. Volatile Organic Content (VOC): the portion of a coating that is a compound of carbon, is photo chemically reactive, and evaporates during drying or curing, expressed in g/L or lbs/gal as defined in ASTM D3960.

F. Solvents: Those chemicals used to dilute the liquid coating either for thinning the coating or for cleanup.

G. Lead Containing: any coating that contains any detectable amount of lead.

H. Hard To Reach: areas that may not be accessible with spray equipment but can be reached by brush, mitt, or roller.

I. Inaccessible Areas: areas such as back-to-back angles, skip welds, and other areas that a brush, mitt, or roller cannot contact the surface.

J. Manhole Floor: the bench, channel and invert of the manhole containing the concrete/brick floor of a manhole generally shaped as a fillet to direct incoming flows to the outlet piping and to minimize solids buildup, the wall/bench joint, the shaped flow-ways within the bench, the bench/channel joint, and the invert which is the line of the lowest elevation along the bottom of the channel(s).

K. Manhole Wall: that part of the manhole extending from the bench/wall joint to the bottom of the cone/corbel.

L: Manhole Cone/Corbel: the reducing section which tapers concentrically or eccentrically from the top wall joint to the bottom of the chimney or the ring (frame) casting where there is no chimney.

M. Manhole Chimney: the narrow vertical section built from brick or concrete adjusting rings extending from the top of the cone/corbel to the bottom of the frame casting.

N. Leaks/ infiltration: presence of water, or indications of water, inside the manhole caused by subsurface water entering the manhole from the exterior through cracks, fractures, holes, broken seals, or other means.

O. Inflow: surface water generally entering into a manhole through or under the manhole cover, frame, frame seal, chimney wall, or at the cone/corbel chimney joint.

P. Void: as defined in ACI.

Q. pH: a measure of acidity and alkalinity.

R. Bug Holes: small regular or irregular cavities, not exceeding 15rnm in diameter, resulting from the entrapment of air bubbles of formed concrete during placement and compaction. Re-rounding shall not be permitted.

37.04 QUALIFICATIONS

A. The Contractor shall be certified and/or licensed by the coating system manufacturer(s) as an approved Applicator for the products referenced in this section.

B. The Applicator shall be the person responsible for the actual work, either as the foreman or the person actually applying the coating system.

37.05 SUBMITTALS

The Contractor shall submit the following to the Engineer

A. List of materials including coatings, repair materials, grouts, and blasting abrasive material proposed for use.

B. List of equipment and certification by the individual coating manufacturer that the application equipment is sufficient to adequately apply the coating.

C. For each coating system, provide the manufacturer's application guidelines including:
   1. Surface preparation guidelines.
   2. Primer type, where required.
   3. Maximum wet and dry thickness per coat.
   4. Minimum and maximum curing time between coats, and atmospheric conditions for each.
   5. Curing time before submergence in municipal wastewater.
   6. Thinner to be used with each coating.
   7. Ventilator requirements.
   8. Allowable application methods.
   9. Maximum storage life.
   10. Material safety data sheets.
   11 . Interpretation of batch code numbers.
   12. Minimum and maximum relative humidity requirements.
   13. Minimum and maximum surface temperature requirements.
   14. Minimum and maximum ambient temperature requirements.
   15. Manufacturer's recommended application procedure.

D. Shop Drawings for frame and cover castings.

E. Product Data for manhole cover inserts.

F. Provide information on planned surface preparation procedures including, when relevant. abrasive media, minimum water cleaning pressure and flow rate (e.g. 5000 psig @ 4 gpm) • nozzle types (e.g. zero degree rotating nozzle), etc. for coating systems specified. Surface preparation methods shall be based upon the conditions of the substrate and the requirements of the protective coating to be applied. Whichever method(s) are used, they shall be performed in a manner that provides a uniform, sound, clean neutralized surface. At the request of the Engineer, the Contractor shall test for adverse chemical conditions that may hinder overall product performance.

G. Maintenance of Traffic Plan including, but not limited to, specific dates that the Maintenance of Traffic Plan shall be in place.

H. Wastewater Bypass Pumping plan, where required.

I. List of all test equipment to be used, copies of the adhesive and equipment's instructions, adhesives, calibration procedures, MSDS sheets, and copies of all reference standards related to the test equipment.

37.06 QUALITY ASSURANCE/ QUALITY CONTROL

A. General
   1. Deviations from the manufacturer's printed instructions will not be allowed unless approved in writing by the Engineer.
   2. In the event of a discrepancy between the Contractor's, manufacturer's or City Inspector's testing equipment, all parties shall check equipment in question for proper function and calibration.

3. Where there is a conflict between the manufacturer's recommendations and these Technical Specifications, the manufacturer's recommendations shall govern.
4. Test equipment and procedures shall be the same throughout the Contract.
5. Quality Control: Contractor shall be responsible for the quality control of the coatings applied including surface preparation, testing, verifying access, dimensions, configuration, pipe connections, appurtenances, and details of each manhole prior to commencing any Work as well as remedial work to be completed as identified by inspection at the given check points.
6. Quality Assurance: City Inspector shall approve the Contractor's Work regarding surface preparation and quality control of the coatings applied. This documentation in no way relieves the Contractor of the responsibilities described under this Contract. The City Inspector may conduct tests on ambient conditions, pH and surface temperature, coating(s) applied, wet and dry film thickness, coating type coating batch numbers, and other tests.

B. QA/QC Check Points
1. pH Testing: Prior to surface preparation for cementitious coating application, measure and record pH of the manhole interior surface and other parameters as required by coating manufacturer to verify acceptable existing substrate conditions for application of the specified product and to document compliance with warranty requirements. After surface preparation and prior to coating system being applied to the interior of a manhole (excluding coatings to only the interior of a chimney), measure and record pH of the manhole interior surface in at least two locations as approved by the City Inspector. Adjust if required by the coating system manufacturer and per NACE 6/SSPC SP 13 Table 1 for severe service.
2. Concrete surface tensile strength: After surface preparation (including repair and resurfacing products) and prior to a polymer coating system being applied to the interior of a manhole (excluding coatings to only the interior of a chimney and spot type only repairs) measure and record the results of a minimum of two concrete surface tensile strength tests, without glue failures, per manhole at locations as directed by the City Inspector. Tests shall be per ASTM D4541 as modified herein. Utilize a 20 mm test dolly and portable pull-off adhesion tester. Document test failure mode. Failure of the dolly adhesive shall require retesting. If the concrete surface tensile strength is less than 200 psi (NACE 6/SSPC SP 13 Table 1 for light service) notify manufacturer and Engineer for approval before applying coating. (Destructive testing as defined herein shall be performed on the initial manhole coated with a particular coating system. After the initial test. 10% of the manholes coated may require testing as selected by the Engineer. Initial and additional testing required due to test failures shall be at the Contractor's expense.)
3. Wet Film Thickness (WFT): During coating system application, measure and record WFT of the coating in at least four locations in the manhole (one in a chimney) or as directed by the City Inspector. Use an industry standard WFT gage (ASTM D4414) designed for thick coatings. Minimum W FT thickness is specified for each product in the article headed "Coating System Specification Sheets" in this Section of the Technical Specifications.
4. Surface Moisture: After preliminary surface preparation and prior to a polymer coating system being applied to the interior of a manhole, measure and record surface moisture of the manhole interior surface in at least two locations per ASTM

D426 and use a DELMHORST ACCUSCAN moisture meter using a 0 to 100 relative scale.

5. Blotter Test: Upon start up of abrasive blasting, compressed air shall be checked daily for oil and water by blotter test per ASTM D4285.
6. Anchor Profile of Surface: After preliminary surface preparation and prior to coating application to the interior of a manhole (excluding coatings only for interior of a chimney) compare and record anchor profile by comparison to various grits of sandpaper.
7. Surface Preparation: Shall be accepted by the coating system manufacturer prior to the application of the coating system.
8. Ambient Conditions: Measure and record the test results for relative humidity, manhole wall surface temperature, dew point and ambient temperature to ensure compliance for materials applied.
9. Coating Adhesion: After polymer coating system application and cure, measure and record the results of a minimum of two adhesion tests, without glue failures, per manhole at locations within the manhole as directed by the City Inspector. Tests shall be per ASTM D4541 as modified herein. Utilize a 20 mm test dolly and portable pull-off adhesion tester. Document test failure mode, whether failure is within the substrate, failure is within the coating, or failure is at the coating/substrate interface. Failure of the dolly adhesive shall require retesting. If the testing damages the coating, spot repair the test location while following manufacturer's recommendations. Failure at the coating/substrate interface with less than 10% of substrate adhered to the coating and less than 100 psi pull-off strength, shall be deemed a coating system failure and the Contractor shall remove the coating to soundly adhered edges, re-perform surface preparation procedures, and recoat the failed surfaces, at the Contractor's expense. Low pull-off strength values <150 psi) may require additional testing/evaluation to determine potential adhesion defects at the sole discretion of the Engineer. (Destructive adhesion testing as defined herein shall be performed on the initial manhole coated with a particular coating system. After the initial test, 10% of the manholes coated may require testing as selected by the Engineer. Initial and additional testing required due to test failures shall be at the Contractor's expense.)
10. Holiday Testing: The finished polymer coating shall be inspected per ASTM D-4787 "Continuity Verification of Liquid or Sheet Linings Applied to Concrete Substrates", using high-voltage spark testing equipment with variable settings. Test voltage shall be set at an initial 100 volts per mil (4,000 volts per mm) of specified film thickness, and then increased as needed to compensate for relative conductivity of the concrete substrate by spark testing an induced holiday at furthest extension of test probe from grounding location. Once test voltage is determined, it shall be used throughout that area, and then re-determined again every time a new ground is made. Detected holidays shall be marked and repaired per coating manufacturer's recommendations. Contractor shall be responsible to provide necessary Holiday Testing equipment for final inspection. Pinhole testing shall be accomplished using a Tinker Razor Holiday Detector, San Gabriel, CA, Model AP/W or an Engineer approved equal model. A test voltage of 100 volts/mil is recommended. This test shall identify and allow for the repair of pinholes in order to ensure a continuous pinhole-free lining. (Testing shall only be required where full depth manhole coating is specified.)

11. Exfiltration Testing: If necessary or as required perform exfiltration testing according to the following guidelines: Manholes and wetwells 6 feet deep or less should see less than one (1) inch of loss in five (5) minutes. Manholes and wetwells greater than 6 feet depth use one (1) inch plus an additional one eight (1/8) inch per additional foot of depth.
12. Vacuum Testing: May be conducted per ASTM C1244-93 only after rehabilitated structure has cured for a minimum of seven (7) days.

37.07 CONTAINMENT AND SITE CONDITIONS

A. No grouting materials, solvents, chemicals, blasting media, or debris of any sort shall be allowed to be discharged to the wastewater collection system. Water from pressure washing (>100 psi) may be allowed to enter the system after any debris has settled, when it demonstrated to the satisfaction of the City Inspector that no debris will enter the collection system. Water applied at less than 100 psi and containing common, household strength detergents, which are used strictly for rinsing the interior surfaces of the structure, may be allowed into the system as long as no debris are washed into the system. All odors noticeable by the average person shall be confined to an area within 10 feet of the structure. The Contractor shall provide odor control equipment or methods so odors are confined and in conjunction with closed space entry or other safety requirements.

B. Provide environmental controls such as ventilators if the cure time of the coating is slowed by the presence of coating or solvent vapor, and heaters and/or dehumidification as necessary to meet coating application requirements.

C. Applicator shall conform to all local, state, and federal regulations including those set forth by OSHA, RCRA, and the EPA.

37.08 WARRANTY

The Contractor shall unconditionally guarantee all manhole rehabilitation Work in this Contract against defects of materials and workmanship for a period of 3 years under normal use, operation, and service in accordance with the requirements of the Supplemental General Conditions article headed "Guarantee Period".

The Contractor and cementitious coating manufacturer shall warrant all cementitious manhole coating Work in this Contract against defects of materials and workmanship for a period of 10 years under normal use, operation, and service. The Contractor shall provide all testing and prepare all required installation reports, warranty registration documentation, etc. and submit same to the coating manufacturer and Engineer on behalf of the City. The Contractor shall furnish a warranty certificate from the cementitious coating manufacturer indicating acceptance and commencement of the warranty period. The Contractor and coating manufacturer shall, within sixty (60) days of written notice thereof, propose an acceptable method and repair any defects (including all labor and materials) that may develop during the warranty period in a manner acceptable to the Engineer and at no cost to the City. Defects shall be defined as: visible leakage of groundwater into the manhole or separation of any part of the coating from the host manhole or coating interfacing joints.

37.09 MATERIALS

A. Coating Products: Pure calcium aluminate cementitious manhole coating systems shall be Product A or B. Reinforced polymer manhole coating system shall be Product C, D, E, F, G, or H. Approved equal must be submitted for review and approval by the Engineer and City prior to bid.

B. Repair and Resurfacing Products: Repair materials must be compatible with specified manhole coating products and selected to minimize curing time. The following products may be accepted and approved as compatible:

1. Deneef AC 40, Avanti AV 100, or approved equal pressure grout for infiltration elimination.
2. 100% solids, solvent free epoxy grout specifically formulated to be suitable for top coating with the specified coating product(s}.
3. Factory blended, rapid setting, high early strength, fiber reinforced, non-shrink repair mortar that can be troweled or pneumatically spray applied, and specifically formulated to be suitable for top coating with the specified coating product(s}.
4. Products specifically designed for thin (1/4-inch or less) applications shall be used for channels needing to be raised to match or transition with CIPP (cured-in-place pipe) liners. Product shall be SikaTop 123 PLUS, or approved equal. Where manholes with CIPP liners are scheduled to receive a coating, any channel repair materials shall be as recommended by the specific coating manufacturer.

C. Brick Masonry and Precast Concrete Grade Adjustment Rings

1. Bricks shall be new, first quality, sound, hard, uniformly burned, regular and uniform in shape and size. Under burned or salmon brick shall not be acceptable. Only whole brick shall be used. Bricks shall conform to ASTM C32, Grade SS.
2. Precast concrete grade adjustment rings shall conform to the requirements of ASTM C 478. Precast adjustment rings shall not be less than 2 inches thick or be of multiple piece construction. To accommodate steep surface grades, non-uniform precast grade adjustment rings may be manufactured to 2 inches thick on one side and 3 inches thick on the opposite side.
3. Precast concrete grade adjustment rings shall provide structural capacity equal to or greater than the existing or specified manhole frame casting and shall not affect the opening size or surface appearance.
4. Mortar shall be factory blended, rapid setting, high early strength, fiber reinforced, non-metallic, chloride free, non-shrink or low-shrink repair mortar that can be troweled.

D. Frame and Cover Castings

1. Grey Iron castings shall conform to the requirements of ASTM A48 Class 35 B, unless otherwise specified, and be designed for HS-20 load rating.
2. Castings shall be manufactured true to pattern, and component parts shall fit together in a satisfactory manner. They shall be smooth and well cleaned by shot blasting. Circular manhole frame and cover castings shall be furnished with machined horizontal bearing surfaces. Frame and cover castings of the same nominal size shall be interchangeable.

E. Internal Chimney Sealant
1. The chimney sealant shall be minimum 100 mils thick of corrosion resistant aromatic flexible urethane resin coating applied to the inside wall of the chimney and manhole frame casting. The product shall have a minimum elongation of 800% and a Durometer of 75. The seal shall remain flexible allowing repeated vertical or horizontal movements of the manhole frame due to frost lift, ground movement or the thermal movement of pavements.
2. The chimney sealant shall have a minimum tensile and adhesion strength of 1150 PSI and 175 lb. per linear inch respectively. The chimney sealing system shall conform to the physical requirements of ASTM 0412. The chimney sealant shall be Flex-Seal Utility Sealant as manufactured by Sealing Systems. Inc. or approved equal.

F. Manhole Cover Insert
1. The insert body shall be manufactured of 304 stainless steel with a minimum thickness of 18 gauge. The insert shall have a deep-dish bowl design to allow for easy removal of the manhole cover. The insert shall be designed to provide a sufficiently loose fit in the manhole frame casting to allow for easy removal.
2. The insert body gasket shall seal against the frame casting, be made of closed cell neoprene, and affixed to the insert body with a pressure-sensitive adhesive. The gasket shall have a minimum thickness of 1/8 inch and be installed by the manufacturer.
3. The insert body shall have a handle made 3/16" plastic coated 304 stainless steel cable installed on the side of the bowl and attached with two 304 stainless steel round head bolts with flat washers and self-locking nuts.
4. The manhole cover insert and components shall be manufactured of materials resistant to corrosion from atmospheres containing hydrogen sulfide and dilute sulfuric acid. The manhole cover insert shall be InflowShield as manufactured by Inflow Systems, Inc. or approved equal.

G. Standardization: Materials, supplies, and articles provided shall be the standard products of the manufacturers and coating system specified. Coatings in a particular system shall be the products of a single manufacturer.

H. Delivery, Storage and Handling: Deliver materials for field application to the job site in their original, unopened, undamaged containers. Each container shall bear the manufacturers name brand, batch number, date of manufacture, and storage life. Coatings shall be stored in enclosed structures and shall be protected from weather, excessive high or low temperatures, and spills. Coatings exceeding storage life recommended by the manufacturer or that have been visibly damaged shall be removed from the site. Coating materials are to be stored and handled in accordance with their material safety data sheets.

37.10 REPAIR & PREPARATION

A. Repair of Bench and Channel: Manhole bench, flow channels, and inverts shall be repaired and/or constructed as directed to provide smooth flow characteristics and transition of flow through the manhole.

1. Contractor shall prepare, clean, and repair/rebuild manhole bench and flow channel(s) in the same manner as described above. Remove obstructions and loose materials from bench prior to shaping the channel and invert. Using brick and repair/resurfacing mortar, form a smooth, U-shaped channel having a minimum depth of one-half pipe diameter across the floor of the manhole using approved manhole rehabilitation materials. The top edge of the bench at the manhole wall shall be set at an elevation above one-half diameter of the adjacent pipe(s) and sloped at 1-inch per foot to drain toward the flow-through channel and outgoing pipe, and to intersect the channel edge at the one-half diameter level. Active flow shall be diverted as required to allow sufficient setting time for material used.
2. Form a smooth transition with a reshaped channel invert and a raised manhole bench to eliminate sharp edges on the pipe, bench, channel, or invert. Build up and smooth the invert of manhole to match flow line of the connecting pipes. Channel build-up and surface preparation for manholes to be coated shall be in accordance with the section headed "General Coating Preparation" in this Section of the Technical Specifications.
3. Finished benches, channels and inverts shall be smooth and without defects which would allow for accumulation of debris. Finished benches, channels and inverts shall conform to the Contract Documents.

B. Repair/Replacement of Chimney and Frame and Cover Casting

1. Frame and Cover Casting: Frame and cover castings shall be replaced with Contractor or City furnished frame and covers, as directed. Frame and cover replacement varies according to manhole type and shall be performed in accordance with the requirements of the Contract Documents. The existing castings shall be salvaged and delivered to the designated location.
2. Chimney: Manholes that have defective chimneys, frames and/or covers, or covers below grade will be designated for adjustment or replacement of the frame and cover. The Work shall include the following:
    a. Saw cut and remove existing asphaltic or concrete pavement. Existing brick or paver stone pavement shall be carefully removed without cutting and salvaged for reuse. Excavate to at least 6 inches below the bottom of the chimney replacement.
    b. Remove the existing manhole frame and cover casting, salvage and reuse the existing casting where adjustment is required, or deliver the salvaged casting to the designated location where replacement is required. Frames broken during removal or handling by the Contractor shall be replaced at the Contractor's expense.
    c. Remove loose, cracked, broken, deteriorated, deficient or otherwise unsound existing chimney materials as required or directed by the Engineer. Existing Portland cement brick shall be removed and replaced regardless of condition. Where existing frame and cover castings are being replaced with a larger frame and cover casting, the existing chimney/corbel shall be removed and replaced as required to provide a chimney that matches the opening of the larger replacement frame casting. Existing surfaces shall be cleaned and prepared for chimney replacement.
    d. The top of the cone shall be set between two and one-half inches and fourteen and one-half (14 1/2) inches below the bottom of the manhole cover

frame. It is the intent of the specifications to provide a minimum of two and one-half inches to accommodate future grade changes without disturbing the manhole. Where the distance between the bottom of the manhole cover frame and the top of the cone is greater than fourteen and one-half (14 1/2) inches, 12-inch riser units shall be used to bring the top of the cone to within the limits specified.

e. Replace existing chimney with new specified materials. The elevation and horizontal position of the frame shall be adjusted as necessary by installing precast grade adjustment rings or a sufficient number of brick and mortar rows to obtain the desired elevation. The frame and cover elevation and cross slope shall match the existing adjacent pavement. The frame and cover elevation shall be minimum 1 inch above existing grade in unpaved areas, or higher as directed by the Engineer. No materials other than the prepared mortar bed shall be used to obtain final elevation and slope of the frame. The prepared mortar bed shall be minimum 1/2 inch thick.

f. Backfill the excavation and restore surfaces to a condition equal or better than the existing condition prior to construction, in accordance with the requirements of the Contract Documents.

C. Elimination of Infiltration: Infiltration shall be considered as "Minor" or "Severe". (1) "Minor" infiltration consists of water penetration of the manhole structure, appearing as a wet stain or a minute flow (trickle) of water on the interior surface of the manhole. (2) "Severe" infiltration consists of multiple leaks penetrating an area or of single leaks that spray into the interior of the manhole which require drilling through the manhole structure and pumping grout by the use of pressurized injection grouting equipment to stop active leaks. Contractor shall ensure that all visible leaks are eliminated in accordance with the Contract Documents and the coating manufacturer's material recommendations prior to surface preparation and coating application.

1. "Minor" infiltration: If observed within the manhole structure after surface preparation is complete, the area shall be prepared and a product specifically formulated for infiltration control and recommended by the specified manhole coating manufacturer(s) shall be used to stop minor infiltration flows in accordance with the product manufacturer's guidelines.
2. "Severe" infiltration: Requires manhole drilling and pressure grouting. The products used for pressure grouting shall be installed in accordance with the manufacturer's guidelines. Substitute materials shall meet manhole coating manufacturer's recommendations for the particular manhole coating system specified.
    a. Manhole grouting shall only be performed where approved and after associated Work such as CIPP lining.
    b. Chemical grouting shall be performed beginning at the bottom of the manhole and continue up as required to seal all points of severe infiltration.
    c. Grouting, once commenced, shall be completed without stoppage. In case of equipment breakdown, wash out grouting system sufficiently to ensure fresh grout and adequate bond and penetration will occur upon restart. Maintain grout pressure until grout has set.
    d. Grout travel shall be verified by migration of grout to defects or adjacent injection holes.
    e. Injection holes shall be cleaned and patched with waterproof quick setting

mortar as recommended by grout manufacturer.

D. General Coating Preparation

1. Surfaces to be coated shall be cleaned and prepared per the coating manufacturer's recommendations or per International Concrete Repair Institute (ICRI) Guideline Number 03732, whichever is more rigorous. Before applying coating, all contaminants including wastewater, oil, grease, dirt, rust, loose mill scale, waxes, efflorescence, sealers, salts, old coatings, and other foreign substances shall be removed. Oil and grease shall be removed before mechanical cleaning (hydro-blasting) is started. Where mechanical cleaning is accomplished by abrasive blast cleaning, the abrasive used shall be washed, graded and free of contaminates which might interfere with the adhesion of the coating. Steam cleaning, detergent, industrial degreasers, and/or hot water shall be used to clean wall surfaces unless this is contrary to the recommendations of the specific coating system manufacturer. Acid solutions shall not be used.
2. As necessary, wastewater flow shall be stopped, bypassed or diverted for the preparation and application of the coating product{s).
3. Contractor shall prepare, clean, and seal all manhole wall penetrations in accordance with coating manufacturer's recommendations and as approved by the Engineer. Bench, channel, invert, chimney, and frame and cover casting repairs and/or replacements shall be completed before coatings are applied.
4. During surface preparation and coatings application, all nearby equipment, vehicles, structures, etc. shall be protected from blasting grit, dust and over sprayed, dropped or spilled materials. Surfaces adjacent to a proposed leading edge of coating application shall be taped-off or otherwise protected.
5. Clean cloths and clean fluids shall be used in solvent cleaning.
6. Contractor shall inspect all surfaces specified to receive a protective coating prior to surface preparation. Contractor shall notify Engineer of any noticeable disparity in the surfaces which may interfere with the proper preparation or application of the repair mortar and coating. Surface profile created by mechanical cleaning shall be per the coating manufacturer's recommendations.
7. Damaged surfaces shall be observed by the City Inspector before repairs are made. Where concrete or brick deterioration in a manhole structure is severe, structural integrity may need to be restored prior to application of coating, at Engineer's approval.
8. All active infiltration must be eliminated prior to proposed repair with materials as recommended by the coating manufacturer.
9. Plug or place covers over all pipe openings to prevent extraneous material from entering the wastewater system.

E. Surface Preparation of Concrete and Masonry Surfaces

1. Concrete: prepare per SSPC SP13/NACE 6 "Surface Preparation for Concrete," and the coating manufacturer's recommendations. All leaks evidenced by indications of infiltration, shall be plugged with materials as recommended by coating manufacturer. Surface profile created by abrasive blasted surfaces shall be per the manufacturer's recommendation for the coating system.
2. Brick Manhole: prepare per the coating manufacturer's recommendations. Contractor shall remove all oil, grease, chemicals and paints or protective coatings

by chemical cleaning prior to hydro-blasting or abrasive blasting. All foreign particles and attacked or unsound mortar shall be removed from the joints. All leaks evidenced by indications of infiltration, shall be plugged with materials as recommended by coating manufacturer. Loose brickwork and voids in the mortar joints shall be re-grouted with repair materials to provide a void free smooth surface for coating application.

3. Loose or protruding brick, mortar and concrete shall be removed by using a mason's hammer and chisel. The surface to be repaired must be clean and free of any loose materials.
4. Repair products shall be used to fill bugholes, holes, honeycombs, for patching of deep craters, voids or spalled areas of concrete, and/or smoothing transitions between components prior to coating installation. Products used must be compatible with the specified coating system(s) and used/applied in accordance with the repair product manufacturer's recommendations. Materials used shall be recommended by the coating system manufacturer.
5. Resurfacing/repair products shall be mixed, applied, allowed to cure, and treated per their manufacturer's recommendations, before they are coated. The Contractor shall ensure that resurfacing/repair and/or patching materials are fully cured before final surface preparation or coating application. The Contractor shall follow manufacturer's cure schedule before over coating.
6. Surfaces which are to be coated shall be allowed to dry to the moisture content recommended by the coating manufacturer.

F. Coating Interface with Adjoining Construction Materials

1. Coating product(s) shall interface with adjoining construction materials throughout the manhole structure to effectively seal and protect concrete or masonry substrates from infiltration and attack by corrosive elements. Procedures and materials necessary to affect this interface shall be as recommended by the coating product(s) manufacturer and approved by the Engineer. Termination points of the polymer coating product(s) shall have a minimum three (3) inch interface overlap with each pipe penetration. Termination points of the cementitious coating product(s) shall have flush interface abutting each pipe penetration. Wastewater flow shall be stopped, bypassed or diverted for the preparation and application of the coating product(s) to the invert and interface with pipe materials.
2. CIPP Liners: Polymer manhole coatings shall be chemically compatible with and have the ability to bond with the external or internal (with required surface preparation) surface of CIPP liners. Where manholes are coated in conjunction with CIPP lining activities by others, coating shall take place after pipe lining and utilize the existing wastewater Bypass Pumping setup where possible. Resurfacing/repair products shall be selected to minimize curing time. Manhole surface preparation and repair materials prior to coating shall be placed within the invert, channel, and benches at proper depth to allow for proper coating thickness, interface matching with CIPP profile, and minimum three (3) inch overlap of polymer coatings with CIPP terminal edges (internally or externally) in the invert, channel, benches, and remaining areas. The coating shall be monolithic with piping and manhole components. The CIPP surface to be interfaced with and overlapped with polymer coatings shall be clean and remain protected prior to coating. Surface preparation of internal CIPP surfaces shall require wire brushing or other approved means prior to coating to ensure bonding.

G. Final Cleaning: The Contractor shall ensure that all surfaces to be coated are free of dust, moisture, and condensation. Nearby surfaces shall be cleaned to prevent contamination of substrate or freshly applied coatings.

H. Internal Chimney Sealant Application
1. All loose and protruding mortar and brick that would interfere with the seal's performance shall be removed and the manhole frame casting, chimney and cone/corbel cleaned by wire brushing. Prepare the surface as required by the manufacturer.
2. Active infiltration shall be corrected in accordance with the requirements of the section headed "Elimination of Infiltration" in this Section of the Technical Specifications prior to installing the internal chimney sealant. Resurfacing/repair products shall be completely cured in accordance with the manufacturer's requirements prior to installing the internal chimney sealant. The substrate surface must be free of sand, loose debris, dust, dirt, oil, grease or chemical contamination. A blower may be required to completely dry the substrate surface as recommended by the manufacturer.
3. Ensure the frame casting and structure is clean and dry prior to applying the adhesive primer. Brush the adhesive primer onto the casting and structure surfaces where the sealant is intended to adhere, in accordance with the requirements of the manufacturer.
4. The chimney sealant shall be evenly brush applied to the required thickness after the adhesive primer has dried, in accordance with the requirements of the manufacturer.
5. The chimney sealant shall be applied and extend vertically from 1-inch above the frame seal to 2-inches below the chimney and cone/corbel joint. The chimney sealant shall be applied and extend vertically from 1-inch above the frame seal to 12-inches below the frame seal for brick manholes where the frame is installed directly on the cone/corbel.

I. Manhole Cover Insert Installation
1. The Contractor shall accurately measure the existing frame and cover casting prior to ordering the manhole cover insert.
2. The manhole frame casting seat shall be free of all dirt, debris, rust and scale prior to the installation of the manhole cover insert. The insert shall be fully seated around the frame casting seat to ensure against water seepage between the insert and frame casting, and as recommended by the manufacturer.

37.11 COATING MATERIAL APPLICATION

A. Workmanship: Coating shall be conducted in accordance with the requirements of SSPC, Good Painting Practice, Volume 1.
1. Coated surfaces shall be free from significant runs, drips, ridges, waves, laps and brush marks, etc. Coats shall be applied so as to produce an even film of uniform thickness.
2. Coating equipment shall be designed for application of the materials specified.
   a. Compressors shall have traps and filters to remove water and oils.
   b. Spray equipment shall be equipped with mechanical agitators, pressure gages, and pressure regulators, and spray nozzles of the proper sizes and functioning in a manner suitable to perform the work.
   c. The spray equipment shall be specifically designed to accurately ratio and apply the specified protective coating materials and shall be regularly maintained and in proper working order. Spray application equipment must be approved by the coating manufacturer and shall be used to apply each coat of the protective coating.
3. Each coat shall be applied evenly and sharply cut to line.

B. Coating Properties, Mixing, and Thinning

1. Coating shall provide a monolithic film with coverage of all specified surfaces and interfacing joints. Undercoats shall be sanded as required to provide a surface suitable for the proper application and adhesion of subsequent coats. Coating shall be thoroughly stirred, strained, and kept at a uniform consistency during application.
2. Coatings shall be mixed in accordance with the manufacturer's instructions.
3. Clean, potable water shall be used for mixing and accurately metering to the prescribed amount for each batch of the lining system

C. Method of Coating Application

1. Observe OSHA Safety Guidelines when entering Confined Space working areas
2. Where two or more coats are required, all coats shall be WFT tested.
3. Coating shall not be applied to a surface until it has been prepared as specified and approved for coating by the manufacturer.
4. Action shall be taken to prevent rebound material from entering active sewer lines

D. Film Thickness and Continuity

1. Coating system thickness is the total thickness of primer and finish coats. Coatings shall be applied to the thickness specified.
2. Overspray, pinholes and other surface defects shall be repaired.

37.12 COATING SYSTEM SPECIFICATION SHEETS

Coating Systems specified for use appear on the following pages.

Product A

Manufacturer:	Kerneos Inc., 1316 Priority Lane, Chesapeake, VA-1-877-KERNEOS, 757-284-3200 or FAX 757-284-3300.
Product Name:	SewperCoat PG
Qualifications:	Applicator shall be trained and certified by the manufacturer as qualified to apply the specified coating. Applicator qualifications are addressed under item 12 of the Proposal Questionnaire. Provide references and documentation of certification and experience with submittals.
Material Classification:	Pre-packaged 100% calcium aluminate fiber reinforced cementitious monolithic coating composed of pure fused calcium aluminate cement and manufactured calcium aluminate aggregate (no other aggregate material permitted), and is resistant to biosulfuric acid attack. Chemical composition of the calcium aluminate cement and aggregate portion: Al_20_3= 39 - 44%, CaO = 34 - 38%, $FeO+Fe_20_3$ = 9 - 15%, $Si0_2$=6 - 8%.
Surfaces:	Field applied to existing manholes. Coat all of interior of existing concrete, brick, and block manholes, including channels, and interfacing pipe joints.
Color:	Gray
Compressive Strength:	>7,000 psi @ 28 Days per ASTM C1 09
Tensile Strength:	>700 psi @ 28 Days per ASTM C496
Flexural Strength:	> 1,300 psi @ 28 Days per ASTM C348
Shrinkage @ 90% RH:	<0.07% @ 28 Days per ASTM C596
Bond:	>2,500 psi @ 28 Days per ASTM C882

Freeze-Thaw:	No visible damage after 300 cycles per ASTM C666
Density:	Per manufacturer
Service Condition:	Immersed, non-immersed, domestic wastewater corrosive environment.
Surface Preparation:	Per the International Concrete Repair Institute (ICRI) Guideline No. 03732 and the section headed "Preparation" in this Section of the Technical Specifications. Inject or hand pack grout to seal holes, leaks and seeping. Prepared surface shall be thoroughly moistened with water prior to the application. Do not apply to surfaces with running water.
Repair Materials:	Patching grout, infiltration control grout, and any other repair materials shall comply with the recommendations of the manufacturer. No holes or honeycomb surfaces should remain after the application of the repair mortar. Materials shall be fully cured before coating is applied.
Environmental Controls:	Minimum air temperature 40 degrees F and do not expose to rain or snow. Maximum mix temperature 90 degrees F at time of application. Provide ventilation as recommended by manufacturer. Provide wastewater bypass as necessary
Application:	Field application by "wet-shotcrete" method typically with a low-pressure progressive cavity (rotor/stator) type pump that is clean and free of any Portland cement residue. Only unopened manufacturer pre-packaged material permitted for use and mixed with clean potable water per manufacturer's recommendation. Applied by trained technician who is experienced in the application of spray applied cementitious coatings and has been certified by the manufacturer. Coating shall be applied within 24 hours of completion of surface preparation. The finished bench surfaces shall be smooth, free of ridges and will be sloped in the direction of flow. Special care shall be used to ensure a smooth transition between the new manhole invert and intersecting pipe inverts such that flow will not be impaired. Manufacturer to certify equipment proposed for use by Contractor.
Curing:	Per manufacturer's recommendations and minimum 18 hours moist curing. Curing compound, if required, shall meet the requirements of ASTM C309 and be approved by the lining material manufacturer and the Engineer prior to use. Minimum 6 hours curing prior to contact or immersion with flowing wastewater
Thickness:	Minimum of 1/2 inch DFT
Tolerances:	Minus 0 inches.
Cleanup:	Water
Inspection Check Points:	See the subsection headed "Quality Assurance/Quality Control" in this Section of the Technical Specifications. Check Points 1 through 10.

Product B

Manufacturer:	The Strong Company, Inc., 4505 Emmett Sanders Road, Pine Bluff, AR -1-800-982-8009 or FAX 870-850-6933.
Product Name:	High Performance Mix
Qualifications:	Applicator shall be trained and certified by the manufacturer as qualified to apply the specified coating. Applicator qualifications are addressed under item 12 of the Proposal Questionnaire. Provide references and documentation of certification and experience with submittals.
Material Classification:	Pre-packaged 100% calcium aluminate fiber reinforced cementitious monolithic coating composed of pure fused calcium aluminate cement and

	manufactured calcium aluminate aggregate (no other aggregate material permitted) and is resistant to biosulfuric acid attack. Chemical composition of the calcium aluminate cement and aggregate portion: Al_20 3::: 39 44%, CaO ::: 34 - 38%, $FeO+Fe_20_3$ ::: 9 - 15%, $Si0_2$::: 6 - 8%.
Surfaces:	Field applied to existing manholes. Coat all of interior of existing concrete, brick, and block manholes, including channels, and interfacing pipe joints.
Color:	Gray
Compressive Strength:	>9,000 psi @ 28 Days per ASTM C109
Tensile Strength:	>800 psi @ 28 Days per ASTM C496
Flexural Strength:	>1,300 psi @ 28 Days per ASTM C293
Shrinkage @ 90% RH:	0% @ 28 Days per ASTM C596
Bond:	>3,000 psi @ 28 Days per ASTM C882
Freeze-Thaw:	No visible damage after 300 cycles per ASTM C666
Density:	Per manufacturer.
Service Condition:	Immersed, non-immersed, domestic wastewater corrosive environment.
Surface Preparation:	Per the International Concrete Repair Institute (ICRI) Guideline No. 03732 and the section headed "Preparation" in this Section of the Technical Specifications. Inject or hand pack grout to seal holes, leaks and seeping. Prepared surface shall be thoroughly moistened with water prior to the application. Do not apply to surfaces with running water.
Repair Materials:	Patching grout, infiltration control grout, and any other repair materials shall comply with the recommendations of the manufacturer. No holes or honeycomb surfaces should remain after the application of the repair mortar. Materials shall be fully cured before coating is applied.
Environmental Controls:	Minimum air temperature 40 degrees F and do not expose to rain or snow. Maximum mix temperature 90 degrees F at time of application. Provide ventilation as recommended by manufacturer. Provide wastewater bypass as necessary.
Application:	Field application by "wet-shotcrete" method typically with a low-pressure progressive cavity (rotor/stator) type pump that is clean and free of any Portland cement residue. Only unopened manufacturer pre-packaged material permitted for use and mixed with clean potable water per manufacturer's recommendation. Applied by trained technician who is experienced in the application of spray applied cementitious coatings and has been certified by the manufacturer. Coating shall be applied within 24 hours of completion of surface preparation. The finished bench surfaces shall be smooth, free of ridges and will be sloped in the direction of flow. Special care shall be used to ensure a smooth transition between the new manhole invert and intersecting pipe inverts such that flow will not be impaired. Manufacturer to certify equipment proposed for use by Contractor.
Curing:	Per manufacturer's recommendations and minimum 18 hours moist curing. Curing compound, if required, shall meet the requirements of ASTM C309 and be approved by the lining material manufacturer and the Engineer prior to use. Minimum 6 hours curing prior to contact or immersion with flowing wastewater.
Thickness:	Minimum of 1/2 inch DFT
Tolerances:	Minus 0 inches.
Cleanup:	Water
Inspection Check Points:	See the subsection headed "Quality Assurance/Quality Control" in this Section of the Technical Specifications. Check Points 1 through 10.

Product C

Manufacturer:	Protective Liner Systems, Inc. 7625 Mall Parkway, Lithonia, GA 30038. P.O. Box 921, Lithonia, GA 30058. (770) 482-5201, (770) 861-9965.
Product Name:	PLS-650 PerpetuWall Liner System. (PLS-613, PLS-614, PLS-700 and PLS-618)
Qualifications:	Applicator shall be trained and certified by the manufacturer as qualified to apply the specified coating. Applicator qualifications are addressed under item 12 of the Proposal Questionnaire. Provide references and documentation of certification and experience with submittals.
Material Classification:	Fiberglass-reinforced modified epoxy resin monolithic coating system. 100% solids bisphenol A epoxy resin with polyamide curing agent. Materials per ASTM D638-Test Method for Tensile Properties of Plastics, and ASTM D790-Test Methods for Flexural Properties of Unreinforced and Reinforced Plastics and Electrical Insulating Materials.
Surfaces:	Field applied to existing manholes. Coat all of interior of existing concrete, brick, and block manholes, including channels and interfacing pipe joints.
Color:	Light gray
Compressive Strength:	16,800 psi per ASTM D695
Tensile Strength:	12,400 psi per ASTM D638
Flexural Strength:	13,900 psi per ASTM D790
Shrinkage @ 90% RH:	500,000 psi per ASTM D790
Bond:	Shall exceed tensile strength of substrate
Low-Temp. Flexibility:	Per manufacturer, per ASTM D1790
Density:	Per manufacturer.
Service Condition:	Immersed, non-potable, non-immersed, domestic wastewater, corrosive environment, interior and exterior water pressure, traffic areas.
Surface Preparation:	Per the section headed "Preparation" in this Section of the Technical Specifications. In addition, galvanized steel and aluminum may require etching. Inject or hand pack grout to seal holes, leaks and seeping. Can be applied to wet or dry surface. do not apply to surfaces with active infiltration or running water.
Repair Materials:	Patching grout, infiltration control grout, and any other repair materials shall comply with the recommendations of the manufacturer. No holes or honeycomb surfaces should remain after the application of the repair mortar. Materials shall be fully cured before coating is applied.
Environmental Controls:	Provide heaters, dehumidification, and ventilation as recommended by manufacturer and as needed. Provide wastewater bypass as necessary.
Design:	Shall be designed to withstand the hydraulic load generated by the groundwater table. The invert and bench coating thickness shall be the same as that required at the bottom of the manhole wall as determined by the manufacturer's standard engineering calculations for groundwater pressure. Coating thickness design to be based on the groundwater table being one foot below the ground surface. Testing required for design values of the flexural modulus of the coating will be verified by a third-party independent testing lab paid for by the Contractor. The test results and design information for each individual structure shall be submitted to the Engineer for review.
Application:	Field application of PLS-613 or PLS-614 depending on temperature and conditions of application by trained technician who has been certified by the

	manufacturer. PLS-613 can be hand applied by brush, roller or trowel on dry or wet surface. PLS-614 is applied by trowel on dry or wet surface. Coating shall be applied within 24 hours of completion of surface preparation. Coating steps: (1) Begin with an approximate WFT of 100 mils (2) fiberglass fabric cut and pressed into epoxy mastic to full wet-out (3) adjacent applications of fabric edges to be overlapped or butt-jointed (4) fabric top coated with epoxy PLS-613 or PLS-614. Additional coats can be applied in 2-3 hours, but no later than 24 hrs. The finished bench surfaces shall be smooth, free of ridges and will be sloped in the direction of flow. Special care shall be used to ensure a smooth transition between the new manhole invert and intersecting pipe inverts such that flow will not be impaired. Manufacturer to certify equipment proposed for use by Contractor.
Curing:	Coating will cure in 3-4 hours at 70 degrees F to approximately 75% of their strength, after which time may be subjected to active flow. Maximum physical properties achieved in 4-5 days. Higher temperatures will reduce these requirements.
Thickness:	Per manufacturer's design. 125 mils minimum thickness.
Tolerances:	Plus 20 mils or minus 10 mils.
Cleanup:	Clean equipment with Xylene or lacquer thinner. Clean hands with denatured alcohol or Go-Jo type hand cleaner. Dispose of solvent and debris as required by code.
Inspection Check Points:	See the subsection headed "Quality Assurance/Quality Control" in this Section of the Technical Specifications. Check Points 1 through 10.

Product D

Manufacturer:	International Paint LLC; 6001 Antoine Drive, Houston TX 77091 (713) 682-1711
Product Name:	Enviroline 222
Qualifications:	Contractor/applicator trained in the application of high-performance industrial lining systems
Material Classification:	Epoxy novolac
Surfaces:	Carbon steel, stainless steel, concrete; substrate preparation and application in accordance with Manufacturer Data Sheet and Application Guidelines
Color:	Green, Gray
Compressive Strength:	ASTM D695 @ 40 mils TDFT: 72MPa
Tensile Strength:	ASTM D638 @ 40 mils TDFT: 38MPa
Flexural Strength:	ASTM D790 @ 40 mils TDFT: 66MPa
Shrinkage @ 90% RH:	N/A
Bond:	1700 psi on steel, exceeds tensile strength of concrete
Low-Temp. Flexibility:	N/A
Density:	11.4 lbs/gal (1.62 g/cm) / ASTM D1475
Service Condition:	Immersion or secondary containment of wastewater infrastructure, non-potable water and chemicals
Surface Preparation:	Substrate preparation in accordance with Manufacturer Data Sheet and Application Guidelines
Repair Materials:	Intercrete 4801, 4802 & 4820, for topcoat epoxy repair: Enviroline 222 and depending on service, Enviroline 124
Environmental Controls:	Substrate preparation and application in accordance with Manufacturer

	Data Sheet and Application Guidelines
Application:	Application in accordance with Manufacturer Data Sheet and Application Guidelines
Curing:	8 hours at 77° F.
Thickness:	20-100 mils TDFT
Tolerances:	SSPC-PA 2 Level 3
Cleanup:	Enviroline 71C
Abrasion Resistance	ASTM 4060 average of 41.4 mg weight loss per 1000 cycles, CS17 wheel with 1kg loading
Severe Wastewater Analysis Test (ASTM G210)	ASTM G210 Performed well in Severe Wastewater Analysis Test
Inspection Check Points:	See the subsection headed "Quality Assurance/Quality Control" in this Section of the Technical Specifications. Check Points 1 through 10.

Product E

Manufacturer:	Tnemec Company, Inc. 123 West 23rd Ave, North Kansas City, MO, 64116 Phone: 1-816-483-3400 Represented locally by Florida Protective Coatings Services Office Phone: (407) 322 – 1243 Local Representative (Chad Holmes) Phone: (727) 201 – 6706
Product Name:	Tnemec Perma-Shield Series 435 Perma-Glaze
Qualifications:	Applicator must have a minimum NACE level 1 on staff and have a minimum 5 completed projects of similar size & complexity to this work with the use of Tnemec coatings. Applicator must meet all other requirements of the municipality.
Material Classification:	Micro-Fiber Reinforced, Modified Polyamine Epoxy
Surfaces:	Field applied to existing manholes. Coat all of interior of existing concrete, brick, and block manholes, including channels and interfacing pipe joints.
Color:	Gray or Beige
Compressive Strength:	No Less than 9,427 (65.0 MPa) compressive strength, average of five tests.
Tensile Strength:	No less than 3,231 psi (22.28 MPa) tensile strength.
Tensile Modulus of Elasticity (ASTM D2370)	No less than 241,368 psi (1664.17 MPa) tensile modulus of elasticity.
Service Condition:	**Non-potable, anaerobic wastewater environments with mild H_2S concentrations (Immersion & Headspace).**
Surface Preparation:	Abrasive blast or mechanically abrade in accordance with SSPC-SP13/NACE No. 6 to remove all existing coatings and provide a minimum ICRI CSP 5 surface profile. Surface must be clean, dry, and contaminant-free prior to coating.
Repair Materials:	Tnemec Series 218 at a nominal 1/8” and as needed to bring surfaces to level. Series 217 may also be used for deeper repairs (See Application Guide for details).
Environmental Controls:	Substrate temperature should be at least 5°F above the dew point. Refer to manufacturer’s latest written recommendations for additional guidance.
Application:	Refer to product data sheet and Series 435 Application Guide for latest storage, equipment, and application recommendations. Refer to Tnemec’s Perma-Shield Details Guide for construction details

Curing:	Maximum recoat window is 7 days. Cure for 2 days (at 75°F) prior to placing into service.
Thickness:	30.0 – 40.0 mils in one or two coats.
Cleanup:	Tnemec's #4 thinner or MEK.
Abrasion Resistance	No more than 72 mg loss after 1,000 cycles, average of three tests
Severe Wastewater Analysis Test (ASTM G210)	Initial impedance of 12.46 log-Z at 0.01 Hz (ohms cm²). No blistering, cracking, checking or delamination. No less than 84.3% retention and no more than 1.95 ohms cm² reduction in electrochemical impedance after 28 days exposure. No less than 93% loss of tensile adhesion after 28 days in S.W.A.T. average of three tests.
Inspection Check Points:	See the subsection headed "Quality Assurance/Quality Control" in this Section of the Technical Specifications. Check Points 1 through 10.

Product F

Manufacturer:	Tnemec Company, Inc. 123 West 23rd Ave, North Kansas City, MO, 64116 Phone: 1-816-483-3400 Represented locally by Florida Protective Coatings Services Office Phone: (407) 322 – 1243 Local Representative (Chad Holmes) Phone: (727) 201 – 6706
Product Name:	Body Coat (Option 1): Tnemec Series 434 Perma-Shield H_2S. Body Coat (Option 2): Tnemec Series 436 Perma-Shield FR. Glaze Coat: Tnemec Series 435 Perma-Glaze
Qualifications:	Applicator must have a minimum NACE level 1 on staff and have a minimum 5 completed projects of similar size & complexity to this work with the use of Tnemec coatings. Applicator must meet all other requirements of the municipality.
Material Classification:	434: Modified Aliphatic Amine Epoxy Mortar 436: Fiber-Reinforced Modified Polyamine Epoxy 435: Micro-Fiber Reinforced, Modified Polyamine Epoxy
Surfaces:	Field applied to existing manholes. Coat all of interior of existing concrete, brick, and block manholes, including channels and interfacing pipe joints.
Color:	Gray or Beige
Compressive Strength:	No Less than 8,866 psi (6.13 MPa) compressive strength, average of five tests.
Tensile Strength:	No less than 2,940 psi (20.3 MPa) tensile strength.
Tensile Modulus of Elasticity (ASTM D2370)	No less than 6,753 psi (46.6 MPa) tensile modulus of elasticity.
Service Condition:	**Non-potable, anaerobic wastewater environments with moderate to severe H_2S concentrations (Immersion & Headspace).**
Surface Preparation:	Abrasive blast or mechanically abrade in accordance with SSPC-SP13/NACE No. 6 to remove all existing coatings and provide a minimum ICRI CSP 5 surface profile. Surface must be clean, dry, and contaminant-free prior to coating. Cementitious surfaces with a pH less than 9 shall not be considered "contaminant-free".
Repair Materials:	Tnemec Series 218 at a nominal 1/8" and as needed to bring surfaces to level. Series 217 may also be used for deeper repairs (See Application Guide for details).
Environmental Controls:	Substrate temperature should be at least 5°F above the dew point. Refer to

	manufacturer's latest written recommendations for additional guidance.
Application:	Refer to Tnemec Product Data Sheets and Application Guides for latest storage, equipment, and application recommendations. Refer to Tnemec's Perma-Shield Details Guide for construction details.
Curing:	Maximum recoat window is 7 days. Cure for 2 days (at 75°F) prior to placing into service.
Thickness:	Body Coat (Option 1) Series 434: Nominal 1/8", or 125.0 mils thickness. Body Coat (Option 2) Series 436: Nominal 1/8", or 125.0 mils thickness. Glaze Coat Series 435: 15.0 – 20.0 mils.
Cleanup:	Tnemec's #4 thinner or MEK.
Abrasion Resistance	No more than 72 mg loss after 1,000 cycles, average of three tests.
Severe Wastewater Analysis Test (ASTM G210)	Series 434: Initial impedance of 10.6 log-Z at 0.01 Hz (ohms cm²). No blistering, cracking, checking or delamination. No less than 86.7% retention or not more than 1.4 ohms cm² reduction in log-Z electrochemical impedance at 0.01 Hz after 28 days exposure. No loss of adhesion after 28 days in S.W.A.T., average of three tests. Series 436: Initial impedance of 10.2 log-Z at 0.01 Hz (ohms cm²). No blistering, cracking, checking or delamination. No less than 83.7% retention or not more than 1.6 ohms cm² reduction in log-Z electrochemical impedance at 0.01 Hz after 28 days exposure. Series 435: Initial impedance of 12.46 log-Z at 0.01 Hz (ohms cm²). No blistering, cracking, checking or delamination. No less than 84.3% retention and no more than 1.95 ohms cm² reduction in electrochemical impedance after 28 days exposure. No less than 93% loss of tensile adhesion after 28 days in S.W.A.T. average of three tests.
Inspection Check Points:	See the subsection headed "Quality Assurance/Quality Control" in this Section of the Technical Specifications. Check Points 1 through 10.

Product G

Manufacturer:	GML Coatings, LLC. 10315 Technology Terrace, Bradenton FL 34211 (941) 755-2176, GMLCOATINGS.COM
Product Name:	Green Monster Liner Structural
Qualifications:	Coating shall be manufactured by GML Coatings, LLC., or pre-approved equal. The completed system shall provide a waterproof, corrosion resistant liner to prevent any deterioration of concrete surfaces from hydrogen sulfide and other corrosive gases/acids produced by wastewater and to prevent infiltration. **To ensure total unit responsibility, all materials and installation thereof shall be approved and furnished by, and coordinated with, GML Coatings LLC.**
Material Classification:	Green Monster Liner Structural is a two component, 100% solids, zero VOC, polyurethane hybrid, structural coating.
Surfaces:	Existing and new concrete or brick manholes, lift stations, WWTP infrastructures, metals, and fiberglass.
Color:	Light Green
Tensile Strength:	4,500 psi per ASTM D412

Flexural Modulus	>80,000 per ASTM D729
Bond (without primer):	>480 psi per ASTM D 4541 (Substrate failure) concrete >3000 psi per ASTM D 4541 (Substrate failure) carbon steel
Service Condition:	Manholes, Wetwells, WWTP
Surface Preparation:	For optimum performance, concrete should be hydro blasted and/or sandblasted. Concrete that has been adhesion tested and approved to be compatible with **Green Monster Liner Structural** should have cured completely and show a pH of 11 or lower and heated with indirect heat before priming and coating.
Repair Materials:	Remove the portion that is damaged, clean concrete behind damaged liner, prepare surrounding liner for application, apply new liner.
Environmental Controls:	Bypass wastewater as needed, provide heaters, and ventilation
Application:	Surface temperature shall be decreasing while applying liner. Surface moisture content shall be 2% or less, (RH humidity chart will allow higher reading). Prior to application of material, make sure that there is no loose dust, dirt, grease, petrochemicals, or any material that will interfere with the bonding process. For maximum adhesion, Green Monster Liner Structural should always be applied over Green Monster Primer. After following the proper steps according to the GML System Specs, Green Monster Liner Structural should be applied in a cross directional method. It is very important to maintain constant pressure while spraying. A radical variation of these pressures can result in a loss of physical properties, poor color retention, bubbling and de-bonding of the material from the surface applied to. Hose temperature should maintain a minimum temperature of 155°F.
Thickness:	It is recommended to apply Green Monster Liner Structural at a minimum thickness of 125 mils to an unlimited build thickness. Standard application thickness for manholes and lift stations is 250 mils.
Cleanup:	Cured product may be disposed of without restriction. The uncured isocyanate and resin portions should be disposed of according to local, state, and federal laws.
Inspection Check Points:	See the subsection headed "Quality Assurance/Quality Control" in this Section of the Technical Specifications. Check Points 1 through 10.

Product H

Manufacturer:	Raven Lining Systems 686 S. Adams St. Kansas City, KS. 66105 (913) 321-9000
Product Name:	Raven 405
Qualifications:	Applicator shall be trained and certified by the manufacturer as qualified to apply the specified coating.
Material Classification:	100% solids, ultra-high build, solvent-free epoxy coating
Surfaces:	Field applied to existing manholes. Coat all of interior of existing concrete, brick, and block manholes, including channels and interfacing pipe joints.
Color:	Light blue
Compressive Strength:	18,000 psi per ASTM D695
Tensile Strength:	>9000 psi per ASTM D638
Flexural Strength:	15,000 psi per ASTM D790

Shrinkage @ 90% RH:	Per manufacturer
Bond:	Shall exceed tensile strength of substrate
Low-Temp. Flexibility:	Per manufacturer, per ASTM D1790
Density:	Per manufacturer.
Service Condition:	Immersed, non-potable, non-immersed, domestic wastewater, corrosive environment, interior and exterior water pressure, traffic areas.
Surface Preparation:	Per TDS
Repair Materials:	Patching grout, infiltration control grout, and any other repair materials shall comply with the recommendations of the manufacture.
Environmental Controls:	Per manufacturer
Design:	Shall be designed to withstand the hydraulic load generated by the groundwater table. All structures shall be coated with 125 mils Raven 405 un structure is more than 60 ft below water table.
Application:	Shall be applied per manufacturer's application guidelines.
Curing:	Flow can continue after 3 to 6 hours depending on environmental conditions.
Thickness:	Per manufacturer's design. 125 mils minimum thickness.
Tolerances:	Plus 20 mils or minus 10 mils.
Cleanup:	Per manufacturer
Inspection Check Points:	See the subsection headed "Quality Assurance/Quality Control" in this Section of the Technical Specifications. Check Points 1 through 10.

END OF SECTION

THIS PAGE INTENTIONALLY LEFT BLANK

CITY OF ST. PETE BEACH					
WASTEWATER SYSTEM REHABILITATION SERVICES					
ITEM	DESCRIPTION	QTY	UNIT	UNIT PRICE	AMOUNT
MANHOLE REHABILITATION					
1	Mobilization	1	EA		$ -
2	Flagmen (Per-Flagmen)	20	HR		$ -
3	Multi Lane, Lane Closures (FDOT Index No. 613)	10	EA/DY		$ -
4	Multi Lane, Intersection (FDOT Index No. 615)	10	EA/DY		$ -
5	Arrow Boards - 5' Minimum Horizontal Size	10	EA/DY		$ -
6	Variable Message Board	10	EA/DY		$ -
7	Concrete Barrier (FDOT Index No. 100)	10	EA/DY		$ -
8	Low Profile Barrier (FDOT Index No. 120)	10	EA/DY		$ -
9	Signs in Work Zones	10	EA/DY		$ -
10	6" Solid line Thermo Plastic - Permanent	200	LF		$ -
11	24" Stop Bar, Solid, Thermo Plastic, Perm.	200	LF		$ -
12	6" Skip line (6'-10' Skip) Thermo Plastic-Perm.	200	LF		$ -
13	Barricades Type III, with Warning Lights	1000	EA/DY		$ -
14	Barricades Type I or II, with Warning Lights	1000	EA/DY		$ -
15	Repair Manhole Bench and Channel	10	EA		$ -
16	Repair Chimney, Adjust/Replace MH Casting- Unpaved	10	EA		$ -
17	Repair Chimney, Adjust/Replace MH Casting- Asphalt Pavement	100	EA		$ -
18	Rebuild Corbel/Chimney for Type B Manhole Casting	10	EA		$ -
19	Furnish Manhole Casting - Type B	10	EA		$ -
20	Furnish Manhole Casting - Type E	30	EA		$ -
21	Severe Manhole Infiltration Elimination	10	EA		$ -
22	Chemical Sealing - Grout	50	GAL		$ -
23	Internal Chimney Sealant - Type B Manhole Casing	5	EA		$ -
24	Internal Chimney Sealant - Type E Manhole Casing	10	EA		$ -
25	Additional Access Cost for Manhole Coating	10	EA		$ -
26	Bypass Pumping Setup - 6-10" diameter	5	EA		$ -
27	Bypass Pumping Setup - 12" -14" diameter	20	EA		$ -
28	Bypass Pumping Setup - 15" to 21" diameter	10	EA		$ -
29	Bypass Pumping Setup - 24" diameter	5	EA		$ -
30	Bypass Pumping Operation - 6"-10" diameter	10	DAY		$ -
31	Bypass Pumping Operation - 12"-14" diameter	50	DAY		$ -
32	Bypass Pumping Operation - 15" to 21" diameter	25	DAY		$ -
33	Bypass Pumping Operation - 24" diameter	15	DAY		$ -
34	Pure Calcium Aluminate Cementitious MH Coating - 48" diameter, Initial	50	EA		$ -
35	Pure Calcium Aluminate Cementitious MH Coating - 60" diameter, Initial	10	EA		$ -
36	Pure Calcium Aluminate Cementitious MH Coating - 72" diameter, Initial	5	EA		$ -
37	Pure Calcium Aluminate Cementitious MH Coating - 48" diameter, Additional	250	VF		$ -
38	Pure Calcium Aluminate Cementitious MH Coating - 60" diameter, Additional	50	VF		$ -
39	Pure Calcium Aluminate Cementitious MH Coating - 72" diameter, Additional	25	VF		$ -
40	Reinforced Polymer MH Coating - 48" diameter, Initial	5	EA		$ -
41	Reinforced Polymer MH Coating - 60" diameter, Initial	5	EA		$ -
42	Reinforced Polymer MH Coating - 72" diameter, Initial	5	EA		$ -
43	Reinforced Polymer MH Coating - 48" diameter, Additional	25	VF		$ -
44	Reinforced Polymer MH Coating - 60" diameter, Additional	25	VF		$ -
45	Reinforced Polymer MH Coating - 72" diameter, Additional	25	VF		$ -
46	Concrete Curb Replacement - Type D	100	LF		$ -
47	Concrete Curb Replacement - Type F	100	LF		$ -
48	Concrete Curb Replacement - Miami Curb	100	LF		$ -
49	Concrete Sidewalk Replacement - 4" Thick	50	SY		$ -
50	Concrete Sidewalk Replacement - 6" Thick	50	SY		$ -
51	Concrete Driveway Replacement - 4" Thick	50	SY		$ -
52	Concrete Driveway Replacement - 6" Thick	50	SY		$ -
53	Inflow Dish	100	EA		$ -
				SUBTOTAL - MANHOLE REHABILITATION	$ -
PIPE LINING					
1	Mobilization	1	EA		$ -
2	Flagmen (Per-Flagmen)	20	HR		$ -
3	Multi Lane, Lane Closures (FDOT Index No. 613)	10	EA/DY		$ -
4	Multi Lane, Intersection (FDOT Index No. 615)	10	EA/DY		$ -

5	Arrow Boards - 5' Minimum Horizontal Size	10	EA/DY		$	-
6	Variable Message Board	10	EA/DY		$	-
7	Concrete Barrier (FDOT Index No. 100)	10	EA/DY		$	-
8	Low Profile Barrier (FDOT Index No. 120)	10	EA/DY		$	-
9	Signs in Work Zones	10	EA/DY		$	-
10	6" Solid line Thermo Plastic - Permanent	200	LF		$	-
11	24" Stop Bar, Solid, Thermo Plastic, Perm.	200	LF		$	-
12	6" Skip line (6'-10' Skip) Thermo Plastic-Perm.	200	LF		$	-
13	Barricades Type III, with Warning Lights	1000	EA/DY		$	-
14	Barricades Type I or II, with Warning Lights	1000	EA/DY		$	-
15	CIPP Main Liner 6" Diameter - 4.5 mm thickness	1100	LF		$	-
16	CIPP Main Liner 8" Diameter - 6.0 mm thickness	72200	LF		$	-
17	CIPP Main Liner 10" Diameter - 6.0 mm thickness	3600	LF		$	-
18	CIPP Main Liner 12" Diameter - 6.0 mm thickness	2400	LF		$	-
19	CIPP Main Liner 15" Diameter - 7.5 mm thickness	1500	LF		$	-
20	CIPP Main Liner 18" Diameter - 9.0 mm thickness	1800	LF		$	-
21	CIPP Main Liner 21" Diameter - 9.0 mm thickness	2900	LF		$	-
22	CIPP Main Liner 24" Diameter - 10.5 mm thickness	3800	LF		$	-
23	CIPP Main Liner 6" Diameter - Thickness Variance + 1.5mm	300	LF		$	-
24	CIPP Main Liner 8" Diameter - Thickness Variance + 1.5mm	5000	LF		$	-
25	CIPP Main Liner 10" Diameter - Thickness Variance + 1.5mm	1000	LF		$	-
26	CIPP Main Liner 12" Diameter - Thickness Variance + 1.5mm	1000	LF		$	-
27	CIPP Main Liner 15" Diameter - Thickness Variance + 1.5mm	300	LF		$	-
28	CIPP Main Liner 18" Diameter - Thickness Variance + 1.5mm	300	LF		$	-
29	CIPP Main Liner 21" Diameter - Thickness Variance + 1.5mm	300	LF		$	-
30	CIPP Main Liner 24" Diameter - Thickness Variance + 1.5mm	300	LF		$	-
31	Bypass Pumping Setup - 6-10" diameter	5	EA		$	-
32	Bypass Pumping Setup - 12" -14" diameter	45	EA		$	-
33	Bypass Pumping Setup - 15" to 21" diameter	20	EA		$	-
34	Bypass Pumping Setup - 24" diameter	5	EA		$	-
35	Bypass Pumping Operation - 6"-10" diameter	10	DAY		$	-
36	Bypass Pumping Operation - 12"-14" diameter	90	DAY		$	-
37	Bypass Pumping Operation - 15" to 21" diameter	40	DAY		$	-
38	Bypass Pumping Operation - 24" diameter	10	DAY		$	-
39	Normal Cleaning - 6" and 8" diameter	73300	LF		$	-
40	Normal Cleaning - 10" and 12" diameter	6000	LF		$	-
41	Normal Cleaning - 15" and 18" diameter	3300	LF		$	-
42	Normal Cleaning - 21" and 24" diameter	6700	LF		$	-
43	Specialty Cleaning - 6" and 8" diameter	1000	LF		$	-
44	Specialty Cleaning - 10" and 12" diameter	100	LF		$	-
45	Specialty Cleaning - 15" and 18" diameter	50	LF		$	-
46	Specialty Cleaning - 21" and 24" diameter	100	LF		$	-
47	Chemical Sealing of Host Pipe - 10" diameter and less	30	EA		$	-
48	Chemical Sealing of Host Pipe - 12" and 15" diameter	10	EA		$	-
49	Chemical Sealing of Host Pipe - 18" to 24" diameter	5	EA		$	-
50	Chemical Sealing - Grout	100	GAL		$	-
51	Removal & Sealing of Protruding Service Connections	25	EA		$	-
52	Additional Access Cost Main Liner	25	EA		$	-
53	Service Reconnection	200	EA		$	-
54	CIPP Liner Testing	5	EA		$	-
55	Lateral Grouting	10	EA		$	-
				SUBTOTAL - PIPE LINING	$	-
POINT REPAIRS						
1	Mobilization for Routine Response	20	EA		$	-
2	Mobilization for Emergency Response	6	EA		$	-
3	Flagmen (Per-Flagmen)	20	HR		$	-
4	Multi Lane, Lane Closures (FDOT Index No. 613)	5	EA/DY		$	-
5	Multi Lane, Intersection (FDOT Index No. 615)	5	EA/DY		$	-
6	Arrow Boards - 5' Minimum Horizontal Size	10	EA/DY		$	-
7	Variable Message Board	10	EA/DY		$	-
8	Concrete Barrier (FDOT Index No. 415)	10	EA/DY		$	-
9	Low Profile Barrier (FDOT Index No. 412)	10	EA/DY		$	-
10	Signs in Work Zones	10	EA/DY		$	-

11	6" Solid line Thermo Plastic - Permanent	200	LF		$	-
12	24" Stop Bar, Solid, Thermo Plastic, Perm.	200	LF		$	-
13	6" Skip line (6'-10' Skip) Thermo Plastic-Perm.	200	LF		$	-
14	Barricades Type III, with Warning Lights	1000	EA/DY		$	-
15	Barricades Type I or II, with Warning Lights	1000	EA/DY		$	-
16	As-Built Survey	5	EA		$	-
17	Excavation, Unsuitable Material	100	CY		$	-
18	Sheeting & Bracing (Left in Place)	500	SF		$	-
19	Sheeting & Bracing, Pipe Trenches (Removed)	2500	SF		$	-
20	Well Point Dewatering Initial - 6'-8' Deep	10	EA		$	-
21	Well Point Dewatering Initial - 8'-10' Deep	10	EA		$	-
22	Well Point Dewatering Initial - 10'-12' Deep	5	EA		$	-
23	Well Point Dewatering Initial - 12'-14' Deep	5	EA		$	-
24	Well Point Dewatering Initial - 14'-16' Deep	3	EA		$	-
25	Well Point Dewatering Initial - > 16' Deep	3	EA		$	-
26	Well Point Dewatering Additional - 6'-8' Deep	200	EA		$	-
27	Well Point Dewatering Additional - 8'-10' Deep	200	EA		$	-
28	Well Point Dewatering Additional - 10'-12' Deep	100	EA		$	-
29	Well Point Dewatering Additional - 12'-14' Deep	100	EA		$	-
30	Well Point Dewatering Additional - 14'-16' Deep	50	EA		$	-
31	Well Point Dewatering Additional - > 16' Deep	50	EA		$	-
32	Jack & Bore 12" x .188" Steel Casing (6" GS)	40	LF		$	-
33	Jack & Bore 16" x .219" Steel Casing (8" GS)	40	LF		$	-
34	Jack & Bore 20" x .250" Steel Casing (10" GS)	40	LF		$	-
35	Jack & Bore 24" x .281" Steel Casing (12" GS)	40	LF		$	-
36	2" Directional Drill HDPE DR 9, IPS OD	200	LF		$	-
37	4" Directional Drill HDPE DR 11, DIPS OD	300	LF		$	-
38	6" Directional Drill HDPE DR 11, DIPS OD	500	LF		$	-
39	8" Directional Drill HDPE DR 11, DIPS OD	500	LF		$	-
40	10" Directional Drill HDPE DR 11, DIPS OD	500	LF		$	-
41	12" Directional Drill HDPE DR 11, DIPS OD	300	LF		$	-
42	6" PVC Pipe, C-900 DR 18 (Gravity Sewer) 0' - 6' Depth	100	LF		$	-
43	6" PVC Pipe, C-900 DR 18 (Gravity Sewer) 6' - 8' Depth	200	LF		$	-
44	6" PVC Pipe, C-900 DR 18 (Gravity Sewer) 8' - 10' Depth	100	LF		$	-
45	6" PVC Pipe, C-900 DR 18 (Gravity Sewer) 10' - 12' Depth	50	LF		$	-
46	6" PVC Pipe, C-900 DR 18 (Gravity Sewer) 12' - 14' Depth	50	LF		$	-
47	6" PVC Pipe, C-900 DR 18 (Gravity Sewer) 14' - 16' Depth	50	LF		$	-
48	6" PVC Pipe, C-900 DR 18 (Gravity Sewer) 16' - 18' Depth	50	LF		$	-
49	8" DI Pipe, CL 350 (Gravity Sewer) 0' - 6' Depth	50	LF		$	-
50	8" DI Pipe, CL 350 (Gravity Sewer) 6' - 8' Depth	100	LF		$	-
51	8" DI Pipe, CL 350 (Gravity Sewer) 8' - 10' Depth	100	LF		$	-
52	8" DI Pipe, CL 350 (Gravity Sewer) 10' - 12' Depth	50	LF		$	-
53	8" DI Pipe, CL 350 (Gravity Sewer) 12' - 14' Depth	50	LF		$	-
54	8" DI Pipe, CL 350 (Gravity Sewer) 14' - 16' Depth	50	LF		$	-
55	8" DI Pipe, CL 350 (Gravity Sewer) 16' - 18' Depth	50	LF		$	-
56	8" PVC Pipe, C-900 DR 18 (Gravity Sewer) 0' - 6' Depth	200	LF		$	-
57	8" PVC Pipe, C-900 DR 18 (Gravity Sewer) 6' - 8' Depth	400	LF		$	-
58	8" PVC Pipe, C-900 DR 18 (Gravity Sewer) 8' - 10' Depth	400	LF		$	-
59	8" PVC Pipe, C-900 DR 18 (Gravity Sewer) 10' - 12' Depth	400	LF		$	-
60	8" PVC Pipe, C-900 DR 18 (Gravity Sewer) 12' - 14' Depth	400	LF		$	-
61	8" PVC Pipe, C-900 DR 18 (Gravity Sewer) 14' - 16' Depth	200	LF		$	-
62	8" PVC Pipe, C-900 DR 18 (Gravity Sewer) 16' - 18' Depth	200	LF		$	-
63	10" DI Pipe, CL 350 (Gravity Sewer) 0' - 6' Depth	50	LF		$	-
64	10" DI Pipe, CL 350 (Gravity Sewer) 6' - 8' Depth	100	LF		$	-
65	10" DI Pipe, CL 350 (Gravity Sewer) 8' - 10' Depth	100	LF		$	-
66	10" DI Pipe, CL 350 (Gravity Sewer) 10' - 12' Depth	50	LF		$	-
67	10" DI Pipe, CL 350 (Gravity Sewer) 12' - 14' Depth	50	LF		$	-
68	10" DI Pipe, CL 350 (Gravity Sewer) 14' - 16' Depth	50	LF		$	-
69	10" DI Pipe, CL 350 (Gravity Sewer) 16' - 18' Depth	50	LF		$	-
70	10" PVC Pipe, C-900 DR 18 (Gravity Sewer) 0' -6' Depth	100	LF		$	-
71	10" PVC Pipe, C-900 DR 18 (Gravity Sewer) 6' - 8' Depth	400	LF		$	-
72	10" PVC Pipe, C-900 DR 18 (Gravity Sewer) 8' - 10' Depth	400	LF		$	-
73	10" PVC Pipe, C-900 DR 18 (Gravity Sewer) 10' - 12' Depth	400	LF		$	-

74	10" PVC Pipe, C-900 DR 18 (Gravity Sewer) 12' - 14' Depth	400	LF		$	-
75	10" PVC Pipe, C-900 DR 18 (Gravity Sewer) 14' - 16' Depth	200	LF		$	-
76	10" PVC Pipe, C-900 DR 18 (Gravity Sewer) 16' - 18' Depth	200	LF		$	-
77	12" DI Pipe, CL 350 (Gravity Sewer) 0' - 6' Depth	50	LF		$	-
78	12" DI Pipe, CL 350 (Gravity Sewer) 6' - 8' Depth	100	LF		$	-
79	12" DI Pipe, CL 350 (Gravity Sewer) 8' - 10' Depth	100	LF		$	-
80	12" DI Pipe, CL 350 (Gravity Sewer) 10' - 12' Depth	100	LF		$	-
81	12" DI Pipe, CL 350 (Gravity Sewer) 12' - 14' Depth	100	LF		$	-
82	12" DI Pipe, CL 350 (Gravity Sewer) 14' - 16' Depth	50	LF		$	-
83	12" DI Pipe, CL 350 (Gravity Sewer) 16' - 18' Depth	50	LF		$	-
84	12" PVC Pipe, C-900 DR 18 (Gravity Sewer) 0' ' 6' Depth	100	LF		$	-
85	12" PVC Pipe, C-900 DR 18 (Gravity Sewer) 6' - 8' Depth	200	LF		$	-
86	12" PVC Pipe, C-900 DR 18 (Gravity Sewer) 8' - 10' Depth	200	LF		$	-
87	12" PVC Pipe, C-900 DR 18 (Gravity Sewer) 10' - 12' Depth	100	LF		$	-
88	12" PVC Pipe, C-900 DR 18 (Gravity Sewer) 12' - 14' Depth	100	LF		$	-
89	12" PVC Pipe, C-900 DR 18 (Gravity Sewer) 14' - 16' Depth	50	LF		$	-
90	12" PVC Pipe, C-900 DR 18 (Gravity Sewer) 16' - 18' Depth	50	LF		$	-
91	16" DI Pipe, CL 350 (Gravity Sewer) 0' - 6' Depth	200	LF		$	-
92	16" DI Pipe, CL 350 (Gravity Sewer) 6' - 8' Depth	400	LF		$	-
93	16" DI Pipe, CL 350 (Gravity Sewer) 8' - 10' Depth	400	LF		$	-
94	16" DI Pipe, CL 350 (Gravity Sewer) 10' - 12' Depth	200	LF		$	-
95	16" DI Pipe, CL 350 (Gravity Sewer) 12' - 14' Depth	200	LF		$	-
96	16" DI Pipe, CL 350 (Gravity Sewer) 14' - 16' Depth	100	LF		$	-
97	16" DI Pipe, CL 350 (Gravity Sewer) 16' - 18' Depth	100	LF		$	-
98	16" PVC Pipe, C-905 DR 18 (Gravity Sewer) 0' - 6' Depth	100	LF		$	-
99	16" PVC Pipe, C-905 DR 18 (Gravity Sewer) 6' - 8' Depth	200	LF		$	-
100	16" PVC Pipe, C-905 DR 18 (Gravity Sewer) 8' - 10' Depth	200	LF		$	-
101	16" PVC Pipe, C-905 DR 18 (Gravity Sewer) 10' - 12' Depth	100	LF		$	-
102	16" PVC Pipe, C-905 DR 18 (Gravity Sewer) 12' - 14' Depth	100	LF		$	-
103	16" PVC Pipe, C-905 DR 18 (Gravity Sewer) 14' - 16' Depth	50	LF		$	-
104	16" PVC Pipe, C-905 DR 18 (Gravity Sewer) 16' - 18' Depth	50	LF		$	-
105	18" DI Pipe, CL 350 (Gravity Sewer) 0' - 6' Depth	200	LF		$	-
106	18" DI Pipe, CL 350 (Gravity Sewer) 6' - 8' Depth	400	LF		$	-
107	18" DI Pipe, CL 350 (Gravity Sewer) 8' - 10' Depth	400	LF		$	-
108	18" DI Pipe, CL 350 (Gravity Sewer) 10' - 12' Depth	200	LF		$	-
109	18" DI Pipe, CL 350 (Gravity Sewer) 12' - 14' Depth	200	LF		$	-
110	18" DI Pipe, CL 350 (Gravity Sewer) 14' - 16' Depth	100	LF		$	-
111	18" DI Pipe, CL 350 (Gravity Sewer) 16' - 18' Depth	100	LF		$	-
112	18" PVC Pipe, C-905 DR 21 (Gravity Sewer) 0' - 6' Depth	100	LF		$	-
113	18" PVC Pipe, C-905 DR 21 (Gravity Sewer) 6' - 8' Depth	200	LF		$	-
114	18" PVC Pipe, C-905 DR 21 (Gravity Sewer) 8' - 10' Depth	200	LF		$	-
115	18" PVC Pipe, C-905 DR 21 (Gravity Sewer) 10' - 12' Depth	100	LF		$	-
116	18 PVC Pipe, C-905 DR 21 (Gravity Sewer) 12' - 14' Depth	100	LF		$	-
117	18" PVC Pipe, C-905 DR 21 (Gravity Sewer) 14' - 16' Depth	50	LF		$	-
118	18" PVC Pipe, C-905 DR 21 (Gravity Sewer) 16' - 18' Depth	50	LF		$	-
119	21" DI Pipe, CL 350 (Gravity Sewer) 0' - 6' Depth	200	LF		$	-
120	21" DI Pipe, CL 350 (Gravity Sewer) 6' - 8' Depth	400	LF		$	-
121	21" DI Pipe, CL 350 (Gravity Sewer) 8' - 10' Depth	400	LF		$	-
122	21" DI Pipe, CL 350 (Gravity Sewer) 10' - 12' Depth	200	LF		$	-
123	21" DI Pipe, CL 350 (Gravity Sewer) 12' - 14' Depth	200	LF		$	-
124	21" DI Pipe, CL 350 (Gravity Sewer) 14' - 16' Depth	100	LF		$	-
125	21" DI Pipe, CL 350 (Gravity Sewer) 16' - 18' Depth	100	LF		$	-
126	21" PVC Pipe, C-905 DR 21 (Gravity Sewer) 0' - 6' Depth	100	LF		$	-
127	21" PVC Pipe, C-905 DR 21 (Gravity Sewer) 6' - 8' Depth	200	LF		$	-
128	21" PVC Pipe, C-905 DR 21 (Gravity Sewer) 8' - 10' Depth	200	LF		$	-
129	21" PVC Pipe, C-905 DR 21 (Gravity Sewer) 10' - 12' Depth	100	LF		$	-
130	21" PVC Pipe, C-905 DR 21 (Gravity Sewer) 12' - 14' Depth	100	LF		$	-
131	21" PVC Pipe, C-905 DR 21 (Gravity Sewer) 14' - 16' Depth	50	LF		$	-
132	21" PVC Pipe, C-905 DR 21 (Gravity Sewer) 16' - 18' Depth	50	LF		$	-
133	24" DI Pipe, CL 350 (Gravity Sewer) 0' - 6' Depth	200	LF		$	-
134	24" DI Pipe, CL 350 (Gravity Sewer) 6' - 8' Depth	400	LF		$	-
135	24" DI Pipe, CL 350 (Gravity Sewer) 8' - 10' Depth	400	LF		$	-
136	24" DI Pipe, CL 350 (Gravity Sewer) 10' - 12' Depth	200	LF		$	-

137	24" DI Pipe, CL 350 (Gravity Sewer) 12' - 14' Depth	200	LF		$	-
138	24" DI Pipe, CL 350 (Gravity Sewer) 14' - 16' Depth	100	LF		$	-
139	24" DI Pipe, CL 350 (Gravity Sewer) 16' - 18' Depth	100	LF		$	-
140	24" PVC Pipe, C-905 DR 21 (Gravity Sewer) 0' - 6' Depth	100	LF		$	-
141	24" PVC Pipe, C-905 DR 21 (Gravity Sewer) 6' - 8' Depth	200	LF		$	-
142	24" PVC Pipe, C-905 DR 21 (Gravity Sewer) 8' - 10' Depth	200	LF		$	-
143	24" PVC Pipe, C-905 DR 21 (Gravity Sewer) 10' - 12' Depth	100	LF		$	-
144	24" PVC Pipe, C-905 DR 21 (Gravity Sewer) 12' - 14' Depth	100	LF		$	-
145	24" PVC Pipe, C-905 DR 21 (Gravity Sewer) 14' - 16' Depth	50	LF		$	-
146	24" PVC Pipe, C-905 DR 21 (Gravity Sewer) 16' - 18' Depth	50	LF		$	-
147	Install PVC Cleanout	10	EA		$	-
148	Replace PVC Cleanout with Manhole Structure	10	EA		$	-
149	Remove Pipe 2" or 4" (Gravity Sewer)	200	LF		$	-
150	Remove Pipe 6" or 8" (Gravity Sewer)	400	LF		$	-
151	Remove Pipe 10" or 12" (Gravity Sewer)	400	LF		$	-
152	Remove Pipe 15", 16" or 18" (Gravity Sewer)	200	LF		$	-
153	Remove Pipe 21" or 24" (Gravity Sewer)	200	LF		$	-
154	4" Pipe - Install or Adjust Service Lateral 0'-6' Deep	3	EA		$	-
155	4" Pipe - Install or Adjust Service Lateral 6'-8' Deep	3	EA		$	-
156	4" Pipe - Install or Adjust Service Lateral 8'-10' Deep	3	EA		$	-
157	4" Pipe - Install or Adjust Service Lateral 10'-12'Deep	3	EA		$	-
158	4" Pipe - Install or Adjust Service Lateral 12'-14'Deep	2	EA		$	-
159	4" Pipe - Install or Adjust Service Lateral 14'-16'Deep	2	EA		$	-
160	4" Pipe - Install or Adjust Service Lateral 16'-18' Deep	2	EA		$	-
161	6" Pipe - Install or Adjust Service Lateral 0'-6' Deep	3	EA		$	-
162	6" Pipe - Install or Adjust Service Lateral 6'-8' Deep	3	EA		$	-
163	6" Pipe - Install or Adjust Service Lateral 8'-10' Deep	3	EA		$	-
164	6" Pipe - Install or Adjust Service Lateral 10'-12' Deep	3	EA		$	-
165	6" Pipe - Install or Adjust Service Lateral 12'-14' Deep	2	EA		$	-
166	6" Pipe - Install or Adjust Service Lateral 14'-16' Deep	2	EA		$	-
167	6" Pipe - Install or Adjust Service Lateral 16'-18' Deep	2	EA		$	-
168	2" Sewer Line Manhole Connection	3	EA		$	-
169	4" Sewer Line Manhole Connection	3	EA		$	-
170	6" Sewer Line Manhole Connection	5	EA		$	-
171	8" Sewer Line Manhole Connection	5	EA		$	-
172	10" Sewer Line Manhole Connection	3	EA		$	-
173	12" Sewer Line Manhole Connection	3	EA		$	-
174	16" Sewer Line Manhole Connection	3	EA		$	-
175	18" Sewer Line Manhole Connection	2	EA		$	-
176	21” Sewer Line Manhole Connection	2	EA		$	-
177	24” Sewer Line Manhole Connection	2	EA		$	-
178	2" Inside Drop Connection	3	EA		$	-
179	4" Inside Drop Connection	3	EA		$	-
180	6" Inside Drop Connection	3	EA		$	-
181	8" Inside Drop Connection	5	EA		$	-
182	10" Inside Drop Connection	3	EA		$	-
183	12" Inside Drop Connection	3	EA		$	-
184	15"/16" Inside Drop Connection	3	EA		$	-
185	18" Inside Drop Connection	2	EA		$	-
186	21" Inside Drop Connection	3	EA		$	-
187	24" Inside Drop Connection	2	EA		$	-
188	Grouting Out of Service Pipe (Force Main)	30	CY		$	-
189	Disconnect & Plug 2" or 4" Pipe	5	EA		$	-
190	Disconnect & Plug 6" or 8" Pipe	5	EA		$	-
191	Disconnect & Plug 10" or 12" Pipe	5	EA		$	-
192	2" PVC Restrained Joint Pipe & Fittings FM, SDR 21	200	LF		$	-
193	4" PVC Pipe, C-900 DR 18 (Force Main)	500	LF		$	-
194	4" PVC Restrained Joint Pipe & Fittings FM, C-900 DR 18	100	LF		$	-
195	6" PVC Pipe, C-900 DR 18 (Force Main)	500	LF		$	-
196	6" PVC Restrained Joint Pipe & Fittings FM, C-900 DR 18	100	LF		$	-
197	8" PVC Pipe, C-900 DR 18 (Force Main)	500	LF		$	-
198	8" PVC Restrained Joint Pipe & Fittings FM, C-900 DR 18	100	LF		$	-
199	10" PVC Pipe, C-900 DR 18 (Force Main)	500	LF		$	-

200	10" PVC Restrained Joint Pipe & Fittings FM, C-900 DR 18	100	LF		$	-
201	12" PVC Pipe, C-900 DR 18 (Force Main)	300	LF		$	-
202	12" PVC Restrained Joint Pipe & Fittings FM, C-900 DR 18	100	LF		$	-
203	2" Restrained Joints	20	EA		$	-
204	4" Restrained Joints	20	EA		$	-
205	6" Restrained Joints	20	EA		$	-
206	8" Restrained Joints	20	EA		$	-
207	10" Restrained Joints	20	EA		$	-
208	12" Restrained Joints	20	EA		$	-
209	2"-4" Forcemain Pipe and Appurtenances - Over Depth Excavation	400	LF		$	-
210	6"-8" Forcemain Pipe and Appurtenances - Over Depth Excavation	500	LF		$	-
211	10"-12" Forcemain Pipe and Appurtenances - Over Depth Excavation	200	LF		$	-
212	Remove Out of Service Pipe 2" or 4" (Force Main)	500	LF		$	-
213	Remove Out of Service Pipe 6" or 8" (Force Main)	1000	LF		$	-
214	Remove Out of Service Pipe 10" or 12" (Force Main)	500	LF		$	-
215	2" Sleeved Connection	6	EA		$	-
216	4" Sleeved Connection	6	EA		$	-
217	6" Sleeved Connection	10	EA		$	-
218	8" Sleeved Connection	10	EA		$	-
219	10" Sleeved Connection	4	EA		$	-
220	12" Sleeved Connection	4	EA		$	-
221	Reverse Deadman for 2" or 4" Pipe	3	EA		$	-
222	Reverse Deadman for 6" or 8" Pipe	5	EA		$	-
223	Reverse Deadman for 10" or 12" Pipe	3	EA		$	-
224	DI Fittings FM C 153 (Compact Body)	2	TN		$	-
225	2" Air Release Assembly (In-line)	2	EA		$	-
226	2" Air Release Assembly (Offset)	2	EA		$	-
227	2" RWGV (Resilient Wedge Gate Valve) & Box	4	EA		$	-
228	4" RWGV & Box C 515	4	EA		$	-
229	6" RWGV & Box C 515	10	EA		$	-
230	8" RWGV & Box C 515	5	EA		$	-
231	10" RWGV & Box C 515	2	EA		$	-
232	12" RWGV & Box C 515	2	EA		$	-
233	Adjust Valve Box to Finished Grade (In Pavement)	5	EA		$	-
234	Adjust Valve Box to Finished Grade (Outside of Pavement)	5	EA		$	-
235	4" Line Stop	1	EA		$	-
236	6" Line Stop	1	EA		$	-
237	8" Line Stop	1	EA		$	-
238	10" Line Stop	1	EA		$	-
239	12" Line Stop	1	EA		$	-
240	4" x 2" Tapping Saddle Valve & Box	2	EA		$	-
241	4" x 4" Tapping Sleeve Valve & Box	2	EA		$	-
242	6" x 2" Tapping Saddle Valve & Box	2	EA		$	-
243	6" x 4" Tapping Sleeve Valve & Box	2	EA		$	-
244	6" x 6" Tapping Sleeve Valve & Box	2	EA		$	-
245	8" x 2" Tapping Saddle Valve & Box	2	EA		$	-
246	8" x 4" Tapping Sleeve Valve & Box	2	EA		$	-
247	8" x 6" Tapping Sleeve Valve & Box	2	EA		$	-
248	8" x 8" Tapping Sleeve Valve & Box	2	EA		$	-
249	10" x 2" Tapping Saddle Valve & Box	2	EA		$	-
250	10" x 4" Tapping Sleeve Valve & Box	2	EA		$	-
251	10" x 6" Tapping Sleeve Valve & Box	2	EA		$	-
252	10" x 8" Tapping Sleeve Valve & Box	2	EA		$	-
253	10" x 10" Tapping Sleeve Valve & Box	2	EA		$	-
254	12" x 2" Tapping Saddle Valve & Box	2	EA		$	-
255	12" x 4" Tapping Sleeve Valve & Box	2	EA		$	-
256	12" x 6" Tapping Sleeve Valve & Box	2	EA		$	-
257	12" x 8" Tapping Sleeve Valve & Box	2	EA		$	-
258	12" x 10" Tapping Sleeve Valve & Box	2	EA		$	-
259	12" x 12" Tapping Sleeve Valve & Box	2	EA		$	-
260	4' Dia. - Precast Manhole Standard	30	VF		$	-
261	4' Dia. - Precast Manhole Inside Drop	10	VF		$	-
262	4' Dia. - Precast Manhole Outside Drop	10	VF		$	-

263	5' Dia. - Precast Manhole Standard	30	VF		$	-
264	5' Dia. - Precast Manhole Inside Drop	10	VF		$	-
265	5' Dia. - Precast Manhole Outside Drop	10	VF		$	-
266	5' Dia. - Precast Air Release Manhole	10	VF		$	-
267	6' Dia. - Precast Manhole Standard	30	VF		$	-
268	6' Dia. - Precast Manhole Inside Drop	10	VF		$	-
269	6' Dia. - Precast Manhole Outside Drop	10	VF		$	-
270	Removal of Existing Manhole	3	EA		$	-
271	Remove Existing Manhole Additional	30	VF		$	-
272	Initial Excavation - 0'-6' Deep	5	EA		$	-
273	Initial Excavation - 6'-8' Deep	6	EA		$	-
274	Initial Excavation - 8'-10' Deep	6	EA		$	-
275	Initial Excavation - 10'-12' Deep	6	EA		$	-
276	Initial Excavation - 12'-14' Deep	3	EA		$	-
277	Initial Excavation - 14'-16' Deep	3	EA		$	-
278	Initial Excavation - 16'-18' Deep	2	EA		$	-
279	Initial Excavation - 18'-20' Deep	2	EA		$	-
280	Additional Excavation - 0'-6' Deep	100	LF		$	-
281	Additional Excavation - 6'-8' Deep	100	LF		$	-
282	Additional Excavation - 8'-10' Deep	100	LF		$	-
283	Additional Excavation - 10'-12' Deep	100	LF		$	-
284	Additional Excavation - 12'-14' Deep	100	LF		$	-
285	Additional Excavation - 14'-16' Deep	100	LF		$	-
286	Additional Excavation - 16'-18' Deep	50	LF		$	-
287	Additional Excavation - 18'-20' Deep	50	LF		$	-
288	Wastewater Bypass Pumping, Set up, 6" - 10" diameter	5	EA		$	-
289	Wastewater Bypass Pumping, Set up, 12" - 14" diameter	2	EA		$	-
290	Wastewater Bypass Pumping, Set up, 15" - 21" diameter	2	EA		$	-
291	Wastewater Bypass Pumping, Set up, 24" diameter	2	EA		$	-
292	Wastewater Bypass Pumping, Operation, 6" - 10" diameter	10	DAY		$	-
293	Wastewater Bypass Pumping, Operation, 12" - 14" diameter	5	DAY		$	-
294	Wastewater Bypass Pumping, Operation, 15" - 21" diameter	5	DAY		$	-
295	Wastewater Bypass Pumping, Operation, 24" diameter	2	DAY		$	-
296	6" Dia. Pipe Gravity Sewer Point Repair (DI Replacement Pipe)	2	EA		$	-
297	6" Dia. Pipe Gravity Sewer Point Repair (PVC Replacement Pipe)	5	EA		$	-
298	8" Dia. Pipe Gravity Sewer Point Repair (DI Replacement Pipe)	2	EA		$	-
299	8" Dia. Pipe Gravity Sewer Point Repair (PVC Replacement Pipe)	5	EA		$	-
300	10" Dia. Pipe Gravity Sewer Point Repair (DI Replacement Pipe)	2	EA		$	-
301	10" Dia. Pipe Gravity Sewer Point Repair (PVC Replacement Pipe)	5	EA		$	-
302	12" Dia. Pipe Gravity Sewer Point Repair (DI Replacement Pipe)	2	EA		$	-
303	12" Dia. Pipe Gravity Sewer Point Repair (PVC Replacement Pipe)	5	EA		$	-
304	15"/16" Dia. Pipe Gravity Sewer Point Repair (DI Replacement Pipe)	2	EA		$	-
305	15"/16" Dia. Pipe Gravity Sewer Point Repair (PVC Rplacement Pipe)	2	EA		$	-
306	18" Dia. Pipe Gravity Sewer Point Repair (DI Replacement Pipe)	2	EA		$	-
307	18" Dia. Pipe Gravity Sewer Point Repair (PVC Replacement Pipe)	2	EA		$	-
308	21" Dia. Pipe Gravity Sewer Point Repair (DI Replacement Pipe)	2	EA		$	-
309	21" Dia. Pipe Gravity Sewer Point Repair(PVC Replacement Pipe)	2	EA		$	-
310	24" Dia. Pipe Gravity Sewer Point Repair (DI Replacement Pipe)	2	EA		$	-
311	24" Dia. Pipe Gravity Sewer Point Repair (PVC Replacement Pipe)	2	EA		$	-
312	6" Dia. Pipe Gravity Sewer Point Repair - Additional Length (DI Replacement Pipe)	20	LF		$	-
313	6" Dia. Pipe Gravity Sewer Point Repair - Additional Length (PVC Replacement Pipe)	50	LF		$	-
314	8" Dia. Pipe Gravity Sewer Point Repair - Additional Length (DI Replacement Pipe)	20	LF		$	-
315	8" Dia. Pipe Gravity Sewer Point Repair - Additional Length (PVC Replacement Pipe)	100	LF		$	-
316	10" Dia. Pipe Gravity Sewer Point Repair - Additional Length (DI Replacement Pipe)	20	LF		$	-
317	10" Dia. Pipe Gravity Sewer Point Repair - Additional Length (PVC Replacement Pipe)	100	LF		$	-
318	12" Dia. Pipe Gravity Sewer Point Repair Additional Length (DI Replacement Pipe)	50	LF		$	-
319	12" Dia. Pipe Gravity Sewer Point Repair - Additional Length (PVC Replacement Pipe)	20	LF		$	-
320	15"/16" Dia. Pipe Gravity Sewer Point Repair - Additional Length (DI Replacement Pipe)	20	LF		$	-
321	15"/16" Dia. Pipe Gravity Sewer Point Repair - Additional Length (PVC Replacement Pipe)	50	LF		$	-
322	18" Dia. Pipe Gravity Sewer Point Repair - Additional Length (DI Replacement Pipe)	20	LF		$	-
323	18" Dia. Pipe Gravity Sewer Point Repair - Additional Length (PVC Replacement Pipe)	50	LF		$	-
324	21" Dia. Pipe Gravity Sewer Point Repair - Additional Length (DI Replacement Pipe)	20	LF		$	-
325	21" Dia. Pipe Gravity Sewer Point Repair - Additional Length (PVC Replacement Pipe)	50	LF		$	-

326	24" Dia. Pipe Gravity Sewer Point Repair - Additional Length (DI Replacement Pipe)	20	LF		$	-
327	24" Dia. Pipe Gravity Sewer Point Repair - Additional Length (PVC Replacement Pipe)	50	LF		$	-
328	2" Dia. Pipe Forcemain Point Repair	3	EA		$	-
329	4" Dia. Pipe Forcemain Point Repair	3	EA		$	-
330	6" Dia. Pipe Forcemain Point Repair	3	EA		$	-
331	8" Dia. Pipe Forcemain Point Repair	3	EA		$	-
332	10" Dia. Pipe Forcemain Point Repair	2	EA		$	-
333	12" Dia. Pipe Forcemain Point Repair	2	EA		$	-
334	Replace Manhole Ring & Cover (Asphalt Pavement)	5	EA		$	-
335	Replace Manhole Ring & Cover (Unpaved)	5	EA		$	-
336	Manhole Bench Replacement, 4' Diameter	2	EA		$	-
337	Manhole Bench Replacement, 5' Diameter	2	EA		$	-
338	Manhole Bench Replacement, 6' Diameter	2	EA		$	-
339	Adjust Manhole Ring & Cover to Finished Grade (In Pavement)	5	EA		$	-
340	Adjust Manhole Ring & Cover to Finished Grade (Outside of Pavement)	5	EA		$	-
341	Flowable Concrete Fill	100	CY		$	-
342	Roadway Base, Lime Rock, Primed, Min. LBR 100, Variable Thickness	120	CY		$	-
343	Roadway Base, Crushed Concrete/Graded Aggregate, Min. LBR 100, Variable Thickness	120	CY		$	-
344	Superpave Asphalt Base, Type B 12.5, Variable Thickness	50	TN		$	-
345	Superpave Asphalt Concrete, Type SP 9.5, Fine, Traffic Level C, Variable Thickness	100	TN		$	-
346	Superpave Asphalt Concrete, Type SP 12.5, Fine, Traffic Level C, Variable Thickness	100	TN		$	-
347	Pavement, Cement Concrete, 6" Min Thickness (Driveways)	100	SY		$	-
348	Pavement, Cement Concrete, 8" Thick	100	SY		$	-
349	Driveway Restoration, In Kind, Decorative Block	50	SY		$	-
350	Milling Existing Asphalt Pavement, 1/2" Average Depth	150	SY		$	-
351	Milling Existing Asphalt Pavement, 3/4" Average Depth	150	SY		$	-
352	Milling Existing Asphalt Pavement, 1" Average Depth	150	SY		$	-
353	Curb & Gutter, Concrete, FDOT Type D	100	LF		$	-
354	Curb & Gutter Concrete, FDOT Type F	100	LF		$	-
355	Curb & Gutter, Concrete, Miami Curb	300	LF		$	-
356	Valley Gutter, Concrete, PCED Index 1315	100	LF		$	-
357	Sidewalk, Concrete, 4" Min. Thickness, Remove and Replace	500	SF		$	-
358	Sidewalk, Concrete, 6" Min. Thickness, Remove and Replace	500	SF		$	-
359	Sodding	4500	SF		$	-
360	Sectional Liner, 6" - 24" Pipe	50	EA		$	-
				SUBTOTAL - POINT REPAIRS	$	-
				GRAND TOTAL	$	-

Bid quantities are for comparison purposes only.
This contract consists of various projects which are not yet defined and no quantities are guaranteed.



155 Corey Avenue
St. Pete Beach, FL 33706-1839
www.stpetebeach.org

ADDENDUM 1

Wastewater System Rehabilitation Services

Issued 3/23/2026

*Sealed bids must be received by **9:00 AM on 04/08/2026** electronically via Bonfire. Bids received after the deadline will not be accepted. They will be publicly opened and read at **10:00 AM on 04/08/2026**. All bidders are invited to attend this bid Opening.*

Addendum 1 includes:

Pre-bid Minutes
Questions and Answers

Optional - Pre-Bid Meeting Minutes
RFP: Wastewater System Rehab Services
March 18, 2026
11:00 AM

Staff Members Present:
Sara Spain, Procurement Manager
John Taylor, Assistant Finance Director
Camden Mills, Public Services Director
Brian Peckins, Assistant Public Services Director
Dejan Milosevic, Project Manager
Michael Weaver, Infrastructure Operations Manager
Brian Gelock, Public Services
Kenneth Kosbab, Public Services
Shawn Clark, Public Services
Ariana Wilson-Romo, Exec. Assistant City Clerk's Office

Others Present:

Name	***Company***	***Contact***
Abbey Boyle	PCS Civil	abbeyb@pcscivilinc.com
Chad Holmes	Tnemec	cholmes@tnemec.com
Chris Currie	Inliner Solutions	Chris.currie@puriscorp.com
Denise Davis	Gulf Coast Underground LLC	ddavis@gogcu.com
Tom Brown	Restoration & Protective Solutions	tom@rps.llc
Drew Giustina	Restoration & Protective Solutions	andrew@rps.llc
Emily Bennett	Insituform Technologies LLC	ebennett@azuria.com
Austen Wagoner	Engineered Coatings Solutions LLC	awagoner@ecscoatings.com
Tristan Hine	PCS Civil	tristanh@pcscivilinc.com
Kevin Rowland	Did not provide	Did not provide
Nolan Leal	Rowland DE LLC	nleal@acus-us.com
Mary Hortman	Inliner Solutions LLC	flbids@puriscorp.com
Sawyer Hill	Elite Industrial Painting Inc.	sawyer@eipainting.com
Kyle Matheny	Kimley Horn and Associates	Kyle.matheny@kimley-horn.com
Shawn Ready	Did not provide	Shawn.ready@vortexcompanies.com
Amanda Gonzalez	Kimley Horn and Associates	Amanda.gonzalez@kimley-horn.com
Bruno Sequeira	BCS Construction Group	bsequeira@bcsconstructiongrp.com
Bob Baker	Did not provide	Did not provide
Mark Cassineri	Inliner Solutions	Mark.cassineri@puriscorp.com
Shayna Agosta	Did not provide	sagosta@nwmcc.com

The meeting was called to order at 11:03 AM.

All attendees were present via Teams.

Ms. Spain briefly reviewed important dates and times which are as follows:

- Receipt of questions due 3/25 at 10AM
- Bids due 4/8 by 9AM
- Bid opening 4/8 at 10AM

She requested that any questions be submitted in writing to purchasing@stpetebeach.org. Questions will be answered via an addendum that will be posted to the City website and Bonfire.

Public Services Director Camden Mills summarized that this project will be for as-needed repairs to the City's wastewater collection system. Multiple vendors may be awarded.

The following questions were asked:
Q: Bid bond required? A: Will clarify via an addendum.
Q: Can previous bid tabulations for this project be shared? A:No bid tabs to provide, this is the first time the City has issued a project like this.
Q: Is there anticipated work already prepared? A: Yes, this can be shared via an addendum.
Q: Anticipated annual budget? A: Yes, will clarify in an addendum.
Q: Is there a self- performed percentage requirement? A: Will clarify via an addendum.
Q: Does the City need to be listed for proof of insurance? A: Yes.
Q: Can you provide the address exactly how it needs to be for the COIs? A: Yes.

Mr. Taylor clarified that this is bondable based on the project at that time, meaning a bid bond is not required to submit on this bid however it may be required based on project costs.

There being no additional questions, the meeting was adjourned at 11:16 AM.

Questions and Answers:

1. **Can you confirm if there are any DBE Requirements or good faith efforts to complete for this project? No. Because there are no federal funds nor does the City of St. Pete Beach include these requirements in the Procurement Ordinance, there are no DBE requirements.**
2. **Are there any SBEs/DBEs requirements? No. Because there are no federal funds nor does the City of St. Pete Beach include these requirements in the Procurement Ordinance, there are no SBE/DBE requirements.**
3. **Is a bid bond required? If so, what is the percentage? Yes, 5% of the total bid price.**
4. **What is the engineer's estimate / annual budget cost? Estimated $1,000,000 to $2,500,000 annually.**
5. **I was not able to locate a proposed budget for this project, would you happen to have that information available? Estimated $1,000,000 to $2,500,000 annually.**
6. **Are there any liquidated damages? Yes. If the work embraced by this Contract is not completed on or before the date set for completion or any extension thereof, the actual damages for the delay will be impossible to determine and in lieu thereof, the Contractor shall pay to the City fixed, agreed, and liquidated damages in the amount of either Five-Hundred Dollars ($500) per day for each calendar day of delay until the work is satisfactorily completed.**
7. **Hinterland Group respectfully request that Refratta's 100% pure-fused calcium aluminate coating be approved as an equal under that manhole rehabilitation specifications. Refratta's specs are attached for your review. The specifications for CIPP liner materials and manhole lining materials do not specify specific manufacturers and/or products for use under this contract. As specified in Specification Section 1.09, all materials, appliances, and types of construction shall be in accordance with the Technical Specifications.**
8. **Hinterland Group respectfully requests that Global Materials Company be approved as a CIPP liner manufacturer. Global specs are attached for your review. The specifications for CIPP liner materials and manhole lining materials do not specify specific manufacturers and/or products for use under this contract. As specified in Specification Section 1.09, all materials, appliances, and types of construction shall be in accordance with the Technical Specifications.**
9. **Is there a plan holders list for this project? Please see minutes with organizations present at the pre-bid meeting. The City of St. Pete Beach cannot see who has viewed the bid documents.**
10. **Do you have a plan holders list you could provide me for the above referenced bid? Please see minutes with organizations present at the pre-bid meeting. The City of St. Pete Beach cannot see who has viewed the bid documents.**
11. **Will the Owner/Engineer please provide a copy of the current plan holders list? Please see minutes with organizations present at the pre-bid meeting. The City of St. Pete Beach cannot see who has viewed the bid documents.**
12. **Will the Owner/Engineer please provide the anticipated annual spending for this contract to include each rehab division? Estimated $1,000,000 to $2,500,000 annually total.**
13. **Will the Engineer/Owner please provide previous itemized bid tabulation or contract pricing for each division/ contract? The City of St. Pete Beach does not have bid tabulations within the last 5 years.**
14. **Will the Owner/Engineer provide example work orders from previous contract periods? No.**

15. **Will the Owner provide a disposal site for pipe cleaning debris at no cost to the Contractor? Yes.**
16. **Will the Contractor be allowed to increase pricing from year 1 to subsequent years? Contract prices to remain firm through the first three contract years. Sixty days prior to the contract renewal date, contract/vendor may request a price adjustment.**
17. **Prebid question: Bid bond required? Yes, 5% of the total bid price.**
18. **Prebid question: Can previous bid tabulations for this project be shared? The City of St. Pete Beach does not have bid tabulations within the last 5 years.**
19. **Prebid question: Is there anticipated work already prepared? Bid form reflects anticipated work. City is underway with cleaning/televising entire wastewater collection system to analyze current conditions and will reprioritize if needed once that project is complete (estimated Dec 2026).**
20. **Prebid question: Anticipated annual budget? Estimated $1,000,000 to $2,500,000 annually.**
21. **Prebid question: Is there a self-performed percentage requirement? Yes, 100% Performance Bond.**
22. **Prebid question: Does the City need to be listed for proof of insurance? Yes**
23. **Prebid question: Can you provide the address exactly how it needs to be for the COIs?**
    City of St. Pete Beach
    155 Corey Avenue
    St. Pete Beach, FL 33706

155 Corey Avenue
St. Pete Beach, FL 33706-1839
www.stpetebeach.org

ADDENDUM 2

Wastewater System Rehabilitation Services

Issued 3/27/2026

*Sealed bids must be received by **9:00 AM on 04/08/2026** electronically via Bonfire. Bids received after the deadline will not be accepted. They will be publicly opened and read at **10:00 AM on 04/08/2026**. All bidders are invited to attend this bid Opening.*

Addendum 2 includes:

Questions and Answers

Questions and Answers:

1. **Is there a form to fill out for our sub-contractor for the bid submittal? Do I need to add anything for them with our bid? You are welcome to list them as a sub-contractor in your proposal, but there is no form. The sub-contractor is the contractor's financial responsibility.**

2. **Please clarify the Period of Performance in the General Contract Terms. This states base scope target completion of January 2027 while other parts of the RFP specify a three year contract. Three-year contract with options for up to (2) 1-year extensions for ongoing work.**

3. **Will any bonding be required? Yes, 5% total bid cost.**

4. **How will work be assigned on this contract? Will multiple contractors be assigned to a single project? Multiple contractors may be assigned to a single project, depending on scope required and contractor's abilities.**

5. **Is there an estimated yearly budget for this contract? $1M to $2.5M annually.**

6. **Are there any previous detailed, itemized bid tabs available for this or other similarly bid projects? Please see minutes with organizations present at the pre-bid meeting. The City of St. Pete Beach cannot see who has viewed the bid documents.**

7. **Is Item PL-50, (Grout, Gal) to be used in conjunction with items PL-47 through PL-49? Yes, please refer to the technical specifications. This pay item is applicable only in conjunction with Pay Items 47 through 49.**

8. **Can the owner add a Lateral Grouting, Per EA, Bid Item? Yes, pay item 55 has been added under pipe lining.**

9. **Does the owner have an annual budget for the Wastewater System Pipe (CIPP) Lining portion? No specific budget per portion.**

10. **In the addendum it says we need a 5% Bid Bond. Do you have a form to provide, or can our Surety use there's? We do not have a form. This would come from your surety company for the bond.**

11. **Several vendors have asked about using specific material manufacturers. The specifications for manhole lining materials do not specify specific manufacturers and/or products for use under this contract. As specified in Specification Section 1.09, all materials, appliances, and types of construction shall be in accordance with the Technical Specifications. Accordingly, bidders may base their bids on any manhole lining system that meets the performance and technical requirements of the specifications. Any proposed material or product will be subject to review for compliance with the Contract Documents through the submittal process after award.**

12. **In Addendum 1, there are contradicting answers for the bid bond needing to be submitted. On page 3 after the questions asked during the pre-bid, it states that it is bondable based on the project at that time, meaning a bid bond wasn't required to be submitted. On page 4 and 5, it states a bid bond of 5% is required to be submitted. Can you please clarify if a bid bond is required to be submitted with the proposal, and if so, what percentage is required? Discussion after the meeting led the City of St. Pete Beach to require a bid bond of 5% total bid cost, which must be submitted with the proposal.**

13. **Are alternate products being considered if they meet specification requirements of the proposed products? The specifications for manhole lining materials do not specify specific manufacturers and/or products for use under this contract. As specified in Specification Section 1.09, all materials, appliances, and types of construction shall be in accordance with the Technical Specifications. Accordingly, bidders may base their bids on any manhole lining system that meets the performance and technical requirements of the specifications. Any proposed material or product will be subject to review for compliance with the Contract Documents through the submittal process after award.**

14. **Do we have to fill out each individual section of the bid form, or can we bid the section that only pertains to our capabilities? See IV. General Contract Terms: It is not mandatory to submit a proposal for every item listed. A bidder may bid on any, all, or none of the items.**

15. **What is the anticipated work order size and how many work orders are anticipated to be issued annually? City anticipates issuing 3 purchase orders annually, 1 for each scope (pipe lining, point repairs, manhole rehabilitation), with multiple work orders per purchase order.**

16. **Will the work orders be issued in geographically grouped areas, or will the work be scattered across the City? Work orders will be issued in geographically grouped areas.**

17. **The RFP page 6 states "Vendors may submit proposals for all, some, or only one of the categories" and later "bidder may bid on any, all, or none of the items." Please confirm if bidders are required to bid all items with a category (Manhole Rehabilitation, Pipe Lining, and/or Point Repairs). You may bid certain line items only.**

18. **What are the allowable working hours? Standard work hours shall be from 7:30 AM until 6:00 PM, Monday through Saturday. No work shall take place on Sundays or on official City holidays without prior approval by the City Manager or designee at least 1 week prior to the scheduled work. A list of current official City holidays can be found on the City's Human Resources website at http://www.stpetebeach.org/hr/holidays.html. Contractor will coordinate scheduling of work with the City's Project Manager and City's Inspector.**

19. **Pipe Lining Item 15 for 6" Diameter CIPP shows a thickness of 6.0mm. This is not feasible for 6" diameter pipe and industry standard is 4.5mm. Please confirm 4.5mm will be acceptable for 6" diameter CIPP. 4.5mm is acceptable. This is acceptable. Pay item 15 has been updated accordingly.**

20. Regarding Mobilization bid item, please confirm this will be paid for each work order, and will not be paid only once per year. Please refer to the technical specifications. The quantity of mobilization to be paid for under this item shall be measured as one unit each (EA) per job assignment. One (1) mobilization will be allowed for each job assignment, project, or work order no matter how many times the equipment must be relocated by loading, transporting, and unloading, or under its own power to complete the job assignment or project. Payment for mobilization shall not exceed 10 percent (10%) of the total Contract cost unless the Contractor can prove to the City that his actual mobilization cost exceeds 10 percent (10%).

21. Section 2 Pay Item Descriptions for Mobilization includes "establishment of Subcontractor's temporary offices, buildings, …" Please confirm a temporary office or building is not required. Not required.

22. Section 2 Pay Item Descriptions for Bypass Pumping Setup & Operation states this "Pay Item is applicable on projects or repairs that have high flow or require an over night by pass operation." What is considered "high flow"? Will this item be paid for a "typical" bypass for an 8" diameter CIPP installation? Please elaborate on the requirements for this item and how it will be paid. These pay items apply when bypass pumping is needed to complete the repair without overflows. Pay item 26 would be used for bypass for an 8" diameter installation. The quantity to be measured for payment under this Pay Item will be the actual number of by-pass pumping set ups and operations, per part of day, required by the Engineer in the work. The minimum measurement for this pay item is eight (8) hours or 0.333 days and is measured from the time that the sewage is actually by-passed. This eight (8) hour minimum (0.333 days) includes full compensation for set up and operation for up to the first eight (8) hour period. Additional time will be in tenths of the day or twenty-four (24) hour period. The quantities determined shall be paid per day (DAY) or portion of day of by-pass pumping set up and operation.

23. The measurement for bypass also states the minimum measurement is 8 hours and will be paid for the first 8 hour period with additional time in tenths of a day. Please explain how this will be paid for say a 10 hour day. For example with $1,000/EA Setup and $500/Day: If a 10 hour day is being bypassed, will the contractor be paid the $1000 setup plus 2 hours (10-8 hours) / 24 hours x $1000 = $83.33 + $500 for a total of $1,583.33? In this scenario, payment would be total $1,216.50. ($1,000 setup + $500 operation x (0.333 day + 0.1 day))

24. Section 2 Pay Item Descriptions for CIPP Main Liner include cleaning and pre/post CCTV inspection. However, there are bid items for Normal Cleaning and Specialty Cleaning. Please confirm cleaning and pre CCTV inspection to prep the pipe for CIPP lining will be paid under the Normal Cleaning and/or Specialty Cleaning items, and is not incidental to CIPP Main Liner items. Cleaning and pre CCTV Cleaning and pre-CCTV inspection to prep the pipe for CIPP is incidental to CIPP main liner items. Payment shall include all materials, labor, equipment, and supplies necessary for the CIPP Main Liner installation, and specifically includes, but is not limited to, pre-rehabilitation CCTV inspection, liner sampling and storage of samples for testing, sealing liner connections at manholes, matching existing manhole lining to the CIPP

liner, matching existing flow channels and surfacing to the liner to minimize turbulence, cleaning, removal and disposal of all sand, rubble, deposits, and other accumulated debris after liner installation, post-rehabilitation CCTV inspection video and log, restoration, and all other appurtenant work as specified. Pay items 39-46 are for services requiring cleaning only.

25. Section 2 Pay Item Descriptions for Chemical Sealing of Host Pipe states this item will be paid for each pipe "regardless of…the number of infiltration points sealed." This currently reads that a pipe with one single joint with infiltration will be paid the same as a different pipe with 80 joints that all need to be sealed. Bidders have no way of knowing how many joints may be leaking on a particular segment which could drastically skew the pricing. Would you please consider revising this item to include Chemical Sealing of Host Pipe per Joint or per Service Connection? This pay item is to provide a cost for sealing excessively leaking infiltration points prior to lining of a host pipe. Revising this to a per-seal price would introduce the need to verify the number of leaking joints prior to approving a pay application following execution of the work. For tracking purposes, a flat-fee price will remain.

26. Section 2 Pay Item Descriptions for Service Reconnection states each service shall be grouted 18-inches into the lateral. Will this remain a requirement? If so, would you please consider adding Service Reconnection bid items per pipe diameter as there is substantial cost difference in grouting laterals per main diameter? Main diameter should not be a big factor, the lateral diameters are fairly consistent and the annular space volume will be dependent on the lateral diameter, not the main diameter. Pay item to remain as is.

27. The CIPP Spec (Section 21), paragraph 21.11.02 states up to 10% of the installed liners may be tested for exfiltration per ASTM F1216, Section 8.2 which is a hydrostatic pressure test. This test is not applicable to any line with services and adds unnecessary cost to the project as any potential defects will be verified via the post-rehab CCTV inspection. Would you please consider removing this unnecessary requirement which will ultimately create the most competitive pricing for the Owner? Section 21.11.02 specifies the testing is to be performed prior to any service lateral reconnections. Pay item to remain as-is.

28. Also, please accept SAK Construction, LLC as Installer and Pipenology, LLC as Manufacturer of CIPP Liners, in regards to the above referenced project. Per prequalification requirements on pages 1 and 2 of the Section 21 – CIPP Specification, please see attached documents for your review: SAK Company Information, CIPP Completed Project List, Pipenology CIPP Liner Submittal. The specifications for manhole lining materials do not specify specific manufacturers and/or products for use under this contract. As specified in Specification Section 1.09, all materials, appliances, and types of construction shall be in accordance with the Technical Specifications. Accordingly, bidders may base their bids on any manhole lining system that meets the performance and technical requirements of the specifications. Any proposed material or product will be subject to review for compliance with the Contract Documents through the submittal process after award.

29. **Can you please specify whether the minimum CIPP thicknesses are pre- or post- installation measurements? Post-installation (finished-in-place) thickness.**

30. **Will the Owner provide water, at no cost to the contractor, for work requiring water? Yes.**

155 Corey Avenue
St. Pete Beach, FL 33706-1839
www.stpetebeach.org

ADDENDUM 3

Wastewater System Rehabilitation Services

Issued 3/30/2026

*Sealed bids must be received by **9:00 AM on 04/08/2026** electronically via Bonfire. Bids received after the deadline will not be accepted. They will be publicly opened and read at **10:00 AM on 04/08/2026**. All bidders are invited to attend this bid Opening.*

Addendum 3 includes:

Questions and Answers

Questions and Answers:

Do we add all documents including the bid for (Price) to one PDF for submission? You may submit more than one document. They do not have to all be on one PDF.

For pay items 34-36 and pay items 40-42, the units are EA. Can you provide the depths of the manholes under "EACH" since this will significantly affect the price? Or can you change the units to VF as you have on the pay items for Additional MH Coating? 48" diameter manhole depths range from approx. 2 to 14 ft, with the majority between 4 and 6 ft.

EXHIBIT "C"

Vendor Bid/Proposal

(Place Vendor's Bid/Proposal Behind this Page)

VI. CONTRACTOR'S PROPOSAL SUBMITTAL

The company that is submitting a proposal declares that it has extensive experience in Wastewater System Rehabilitation Services, including manhole rehabilitation, pipe lining and point repairs.

The undersigned, as Proposer, hereby declares that the only person or persons interested in the Proposal as principal or principals are named herein, and that no person other than herein mentioned has any interest in the Proposal or in the Agreement to be entered into; that this Proposal or Agreement is made without connection with any other person, company, or parties making a Proposal; and that it is in all respects fair and in good faith without collusion or fraud.

The Proposer further declares that they have examined the site of the work and informed themselves fully in regard to all conditions pertaining to the place where the work is to be done; that they have examined the Plans and Specifications for the work and Contract Documents relative thereto, and have read all special provisions furnished prior to the opening of proposals; and that they have satisfied themselves relative to the materials to be supplied and work to be performed.

The Proposer proposes and agrees, if the Proposal is accepted, to contract with the City of St. Pete Beach, Florida, in the form of an Agreement specified for **"Wastewater System Rehabilitation Services"** in St. Pete Beach, Florida, in full and complete accordance with the shown, noted, described, and reasonably intended requirements of the Plans, Specifications, and Contract Documents, to the full and entire satisfaction of the City of St. Pete Beach, Florida.

The successful Proposer shall be required to utilize the template Agreement in this Request for Proposals (RFP) and any questions regarding the Agreement must be addressed during the RFP process before submittal. The City reserves the right to respond or not respond to questions in the form of an addendum.

The Proposer proposes to furnish all materials, equipment, labor, and perform the work submitted in their proposal schedule for the City of St. Pete Beach **"Wastewater System Rehabilitation Services."**

COMPANY: Rowland (DE) LLC DATE: April 6, 2026

ADDRESS: 8250 Bryan Dairy Rd. Ste 100 Largo, FL 33777 PHONE: 888-768-6150

PROPOSER: _____ NAME: Tim Roach - COO

(SIGNATURE) (PRINT NAME & TITLE)

STATE OF FLORIDA
COUNTY OF PINELLAS

The foregoing instrument was sworn to (or affirmed), subscribed, and acknowledged before me by means of ☑ physical presence or ☐ online notarization, this 6th day of April, 2026, by Tim Roach, who is personally known to me or has produced _____ as identification.

(SEAL)

Carolyn J Hamlin
Notary Public - State of Florida
Comm.: HH 595966
Expires: Jan. 14, 2029
Notary Public - State of Florida

(Print, Type, Stamp, or Commissioned Name of Notary Public)

SUBMIT PROPOSAL TO: Electronically via Bonfire only

CITY OF ST. PETE BEACH					
WASTEWATER SYSTEM REHABILITATION SERVICES					
ITEM	DESCRIPTION	QTY	UNIT	UNIT PRICE	AMOUNT
MANHOLE REHABILITATION					
1	Mobilization	1	EA	$ 4,000.00	$ 4,000.00
2	Flagmen (Per-Flagmen)	20	HR	$ 5.00	$ 100.00
3	Multi Lane, Lane Closures (FDOT Index No. 613)	10	EA/DY	$ 1.00	$ 10.00
4	Multi Lane, Intersection (FDOT Index No. 615)	10	EA/DY	$ 1.00	$ 10.00
5	Arrow Boards - 5' Minimum Horizontal Size	10	EA/DY	$ 1.00	$ 10.00
6	Variable Message Board	10	EA/DY	$ 1.00	$ 10.00
7	Concrete Barrier (FDOT Index No. 100)	10	EA/DY	$ 5.00	$ 50.00
8	Low Profile Barrier (FDOT Index No. 120)	10	EA/DY	$ 5.00	$ 50.00
9	Signs in Work Zones	10	EA/DY	$ 1.00	$ 10.00
10	6" Solid line Thermo Plastic - Permanent	200	LF	$ 1.00	$ 200.00
11	24" Stop Bar, Solid, Thermo Plastic, Perm.	200	LF	$ 1.00	$ 200.00
12	6" Skip line (6'-10' Skip) Thermo Plastic-Perm.	200	LF	$ 1.00	$ 200.00
13	Barricades Type III, with Warning Lights	1000	EA/DY	$ 1.00	$ 1,000.00
14	Barricades Type I or II, with Warning Lights	1000	EA/DY	$ 1.00	$ 1,000.00
15	Repair Manhole Bench and Channel	10	EA	$ 750.00	$ 7,500.00
16	Repair Chimney, Adjust/Replace MH Casting- Unpaved	10	EA	$ 800.00	$ 8,000.00
17	Repair Chimney, Adjust/Replace MH Casting- Asphalt Pavement	100	EA	$ 1,000.00	$ 100,000.00
18	Rebuild Corbel/Chimney for Type B Manhole Casting	10	EA	$ 5.00	$ 50.00
19	Furnish Manhole Casting - Type B	10	EA	$ 1,700.00	$ 17,000.00
20	Furnish Manhole Casting - Type E	30	EA	$ 1,500.00	$ 45,000.00
21	Severe Manhole Infiltration Elimination	10	EA	$ 185.00	$ 1,850.00
22	Chemical Sealing - Grout	50	GAL	$ 185.00	$ 9,250.00
23	Internal Chimney Sealant - Type B Manhole Casing	5	EA	$ 500.00	$ 2,500.00
24	Internal Chimney Sealant - Type E Manhole Casing	10	EA	$ 500.00	$ 5,000.00
25	Additional Access Cost for Manhole Coating	10	EA	$ 450.00	$ 4,500.00
26	Bypass Pumping Setup - 6-10" diameter	5	EA	$ 50.00	$ 250.00
27	Bypass Pumping Setup - 12" -14" diameter	20	EA	$ 100.00	$ 2,000.00
28	Bypass Pumping Setup - 15" to 21" diameter	10	EA	$ 100.00	$ 1,000.00
29	Bypass Pumping Setup - 24" diameter	5	EA	$ 1,000.00	$ 5,000.00
30	Bypass Pumping Operation - 6"-10" diameter	10	DAY	$ 50.00	$ 500.00
31	Bypass Pumping Operation - 12"-14" diameter	50	DAY	$ 100.00	$ 5,000.00
32	Bypass Pumping Operation - 15" to 21" diameter	25	DAY	$ 100.00	$ 2,500.00
33	Bypass Pumping Operation - 24" diameter	15	DAY	$ 1,000.00	$ 15,000.00
34	Pure Calcium Aluminate Cementitious MH Coating - 48" diameter, Initial	50	EA	$ 850.00	$ 42,500.00
35	Pure Calcium Aluminate Cementitious MH Coating - 60" diameter, Initial	10	EA	$ 900.00	$ 9,000.00
36	Pure Calcium Aluminate Cementitious MH Coating - 72" diameter, Initial	5	EA	$ 195.00	$ 975.00
37	Pure Calcium Aluminate Cementitious MH Coating - 48" diameter, Additional	250	VF	$ 210.00	$ 52,500.00
38	Pure Calcium Aluminate Cementitious MH Coating - 60" diameter, Additional	50	VF	$ 225.00	$ 11,250.00
39	Pure Calcium Aluminate Cementitious MH Coating - 72" diameter, Additional	25	VF	$ 275.00	$ 6,875.00
40	Reinforced Polymer MH Coating - 48" diameter, Initial	5	EA	$ 1,250.00	$ 6,250.00
41	Reinforced Polymer MH Coating - 60" diameter, Initial	5	EA	$ 1,500.00	$ 7,500.00
42	Reinforced Polymer MH Coating - 72" diameter, Initial	5	EA	$ 1,750.00	$ 8,750.00
43	Reinforced Polymer MH Coating - 48" diameter, Additional	25	VF	$ 500.00	$ 12,500.00
44	Reinforced Polymer MH Coating - 60" diameter, Additional	25	VF	$ 550.00	$ 13,750.00
45	Reinforced Polymer MH Coating - 72" diameter, Additional	25	VF	$ 650.00	$ 16,250.00
46	Concrete Curb Replacement - Type D	100	LF	$ 1.00	$ 100.00
47	Concrete Curb Replacement - Type F	100	LF	$ 1.00	$ 100.00
48	Concrete Curb Replacement - Miami Curb	100	LF	$ 5.00	$ 500.00
49	Concrete Sidewalk Replacement - 4" Thick	50	SY	$ 5.00	$ 250.00
50	Concrete Sidewalk Replacement - 6" Thick	50	SY	$ 5.00	$ 250.00
51	Concrete Driveway Replacement - 4" Thick	50	SY	$ 5.00	$ 250.00
52	Concrete Driveway Replacement - 6" Thick	50	SY	$ 5.00	$ 250.00
53	Inflow Dish	100	EA	$ 210.00	$ 21,000.00
		SUBTOTAL - MANHOLE REHABILITATION			$ 449,550.00
PIPE LINING					
1	Mobilization	1	EA	$ 5,000.00	$ 5,000.00
2	Flagmen (Per-Flagmen)	20	HR	$ 28.08	$ 561.60
3	Multi Lane, Lane Closures (FDOT Index No. 613)	10	EA/DY	$ 1,512.00	$ 15,120.00
4	Multi Lane, Intersection (FDOT Index No. 615)	10	EA/DY	$ 648.00	$ 6,480.00
5	Arrow Boards - 5' Minimum Horizontal Size	10	EA/DY	$ 36.29	$ 362.90
6	Variable Message Board	10	EA/DY	$ 162.00	$ 1,620.00

7	Concrete Barrier (FDOT Index No. 100)	10	EA/DY	$ 24.19	$ 241.90
8	Low Profile Barrier (FDOT Index No. 120)	10	EA/DY	$ 21.28	$ 212.80
9	Signs in Work Zones	10	EA/DY	$ 1.73	$ 17.30
10	6" Solid line Thermo Plastic - Permanent	200	LF	$ 9.18	$ 1,836.00
11	24" Stop Bar, Solid, Thermo Plastic, Perm.	200	LF	$ 30.24	$ 6,048.00
12	6" Skip line (6'-10' Skip) Thermo Plastic-Perm.	200	LF	$ 8.37	$ 1,674.00
13	Barricades Type III, with Warning Lights	1000	EA/DY	$ 8.10	$ 8,100.00
14	Barricades Type I or II, with Warning Lights	1000	EA/DY	$ 3.78	$ 3,780.00
15	CIPP Main Liner 6" Diameter - 4.5 mm thickness	1100	LF	$ 68.00	$ 74,800.00
16	CIPP Main Liner 8" Diameter - 6.0 mm thickness	72200	LF	$ 46.00	$ 3,321,200.00
17	CIPP Main Liner 10" Diameter - 6.0 mm thickness	3600	LF	$ 55.50	$ 199,800.00
18	CIPP Main Liner 12" Diameter - 6.0 mm thickness	2400	LF	$ 60.00	$ 144,000.00
19	CIPP Main Liner 15" Diameter - 7.5 mm thickness	1500	LF	$ 75.00	$ 112,500.00
20	CIPP Main Liner 18" Diameter - 9.0 mm thickness	1800	LF	$ 85.00	$ 153,000.00
21	CIPP Main Liner 21" Diameter - 9.0 mm thickness	2900	LF	$ 130.00	$ 377,000.00
22	CIPP Main Liner 24" Diameter - 10.5 mm thickness	3800	LF	$ 175.00	$ 665,000.00
23	CIPP Main Liner 6" Diameter - Thickness Variance + 1.5mm	300	LF	$ 0.01	$ 3.00
24	CIPP Main Liner 8" Diameter - Thickness Variance + 1.5mm	5000	LF	$ 0.01	$ 50.00
25	CIPP Main Liner 10" Diameter - Thickness Variance + 1.5mm	1000	LF	$ 0.01	$ 10.00
26	CIPP Main Liner 12" Diameter - Thickness Variance + 1.5mm	1000	LF	$ 0.01	$ 10.00
27	CIPP Main Liner 15" Diameter - Thickness Variance + 1.5mm	300	LF	$ 0.01	$ 3.00
28	CIPP Main Liner 18" Diameter - Thickness Variance + 1.5mm	300	LF	$ 0.01	$ 3.00
29	CIPP Main Liner 21" Diameter - Thickness Variance + 1.5mm	300	LF	$ 0.01	$ 3.00
30	CIPP Main Liner 24" Diameter - Thickness Variance + 1.5mm	300	LF	$ 0.01	$ 3.00
31	Bypass Pumping Setup - 6-10" diameter	5	EA	$ 50.00	$ 250.00
32	Bypass Pumping Setup - 12" -14" diameter	45	EA	$ 100.00	$ 4,500.00
33	Bypass Pumping Setup - 15" to 21" diameter	20	EA	$ 100.00	$ 2,000.00
34	Bypass Pumping Setup - 24" diameter	5	EA	$ 1,000.00	$ 5,000.00
35	Bypass Pumping Operation - 6"-10" diameter	10	DAY	$ 50.00	$ 500.00
36	Bypass Pumping Operation - 12"-14" diameter	90	DAY	$ 100.00	$ 9,000.00
37	Bypass Pumping Operation - 15" to 21" diameter	40	DAY	$ 100.00	$ 4,000.00
38	Bypass Pumping Operation - 24" diameter	10	DAY	$ 1,000.00	$ 10,000.00
39	Normal Cleaning - 6" and 8" diameter	73300	LF	$ 2.00	$ 146,600.00
40	Normal Cleaning - 10" and 12" diameter	6000	LF	$ 2.00	$ 12,000.00
41	Normal Cleaning - 15" and 18" diameter	3300	LF	$ 2.00	$ 6,600.00
42	Normal Cleaning - 21" and 24" diameter	6700	LF	$ 2.00	$ 13,400.00
43	Specialty Cleaning - 6" and 8" diameter	1000	LF	$ 3.00	$ 3,000.00
44	Specialty Cleaning - 10" and 12" diameter	100	LF	$ 3.00	$ 300.00
45	Specialty Cleaning - 15" and 18" diameter	50	LF	$ 3.00	$ 150.00
46	Specialty Cleaning - 21" and 24" diameter	100	LF	$ 3.00	$ 300.00
47	Chemical Sealing of Host Pipe - 10" diameter and less	30	EA	$ 550.00	$ 16,500.00
48	Chemical Sealing of Host Pipe - 12" and 15" diameter	10	EA	$ 650.00	$ 6,500.00
49	Chemical Sealing of Host Pipe - 18" to 24" diameter	5	EA	$ 750.00	$ 3,750.00
50	Chemical Sealing - Grout	100	GAL	$ 250.00	$ 25,000.00
51	Removal & Sealing of Protruding Service Connections	25	EA	$ 350.00	$ 8,750.00
52	Additional Access Cost Main Liner	25	EA	$ 850.00	$ 21,250.00
53	Service Reconnection	200	EA	$ 350.00	$ 70,000.00
54	CIPP Liner Testing	5	EA	$ 500.00	$ 2,500.00
55	Lateral Grouting	10	EA	$ 500.00	$ 5,000.00
				SUBTOTAL - PIPE LINING	$ 5,475,289.50
POINT REPAIRS					
1	Mobilization for Routine Response	20	EA	$ 5,000.00	$ 100,000.00
2	Mobilization for Emergency Response	6	EA	$ 7,250.00	$ 43,500.00
3	Flagmen (Per-Flagmen)	20	HR	$ 28.64	$ 572.83
4	Multi Lane, Lane Closures (FDOT Index No. 613)	5	EA/DY	$ 1,542.24	$ 7,711.20
5	Multi Lane, Intersection (FDOT Index No. 615)	5	EA/DY	$ 660.96	$ 3,304.80
6	Arrow Boards - 5' Minimum Horizontal Size	10	EA/DY	$ 37.01	$ 370.14
7	Variable Message Board	10	EA/DY	$ 165.24	$ 1,652.40
8	Concrete Barrier (FDOT Index No. 415)	10	EA/DY	$ 24.68	$ 246.76
9	Low Profile Barrier (FDOT Index No. 412)	10	EA/DY	$ 21.70	$ 217.02
10	Signs in Work Zones	10	EA/DY	$ 1.76	$ 17.63
11	6" Solid line Thermo Plastic - Permanent	200	LF	$ 9.36	$ 1,872.72
12	24" Stop Bar, Solid, Thermo Plastic, Perm.	200	LF	$ 30.84	$ 6,168.96
13	6" Skip line (6'-10' Skip) Thermo Plastic-Perm.	200	LF	$ 8.54	$ 1,707.48
14	Barricades Type III, with Warning Lights	1000	EA/DY	$ 8.26	$ 8,262.00

15	Barricades Type I or II, with Warning Lights	1000	EA/DY	$ 3.86	$ 3,855.60
16	As-Built Survey	5	EA	$ 550.80	$ 2,754.00
17	Excavation, Unsuitable Material	100	CY	$ 99.14	$ 9,914.40
18	Sheeting & Bracing (Left in Place)	500	SF	$ 44.06	$ 22,032.00
19	Sheeting & Bracing, Pipe Trenches (Removed)	2500	SF	$ 38.56	$ 96,390.00
20	Well Point Dewatering Initial - 6'-8' Deep	10	EA	$ 4,534.19	$ 45,341.86
21	Well Point Dewatering Initial - 8'-10' Deep	10	EA	$ 4,595.88	$ 45,958.75
22	Well Point Dewatering Initial - 10'-12' Deep	5	EA	$ 4,688.41	$ 23,442.05
23	Well Point Dewatering Initial - 12'-14' Deep	5	EA	$ 4,811.79	$ 24,058.94
24	Well Point Dewatering Initial - 14'-16' Deep	3	EA	$ 4,971.52	$ 14,914.56
25	Well Point Dewatering Initial - > 16' Deep	3	EA	$ 5,860.51	$ 17,581.54
26	Well Point Dewatering Additional - 6'-8' Deep	200	EA	$ 91.43	$ 18,286.56
27	Well Point Dewatering Additional - 8'-10' Deep	200	EA	$ 101.35	$ 20,269.44
28	Well Point Dewatering Additional - 10'-12' Deep	100	EA	$ 113.46	$ 11,346.48
29	Well Point Dewatering Additional - 12'-14' Deep	100	EA	$ 152.02	$ 15,202.08
30	Well Point Dewatering Additional - 14'-16' Deep	50	EA	$ 228.03	$ 11,401.56
31	Well Point Dewatering Additional - > 16' Deep	50	EA	$ 305.14	$ 15,257.16
32	Jack & Bore 12" x .188" Steel Casing (6" GS)	40	LF	$ 1,249.50	$ 49,980.00
33	Jack & Bore 16" x .219" Steel Casing (8" GS)	40	LF	$ 1,326.00	$ 53,040.00
34	Jack & Bore 20" x .250" Steel Casing (10" GS)	40	LF	$ 1,479.00	$ 59,160.00
35	Jack & Bore 24" x .281" Steel Casing (12" GS)	40	LF	$ 1,530.00	$ 61,200.00
36	2" Directional Drill HDPE DR 9, IPS OD	200	LF	$ 33.15	$ 6,630.00
37	4" Directional Drill HDPE DR 11, DIPS OD	300	LF	$ 36.47	$ 10,939.50
38	6" Directional Drill HDPE DR 11, DIPS OD	500	LF	$ 101.24	$ 50,617.50
39	8" Directional Drill HDPE DR 11, DIPS OD	500	LF	$ 112.20	$ 56,100.00
40	10" Directional Drill HDPE DR 11, DIPS OD	500	LF	$ 127.50	$ 63,750.00
41	12" Directional Drill HDPE DR 11, DIPS OD	300	LF	$ 153.00	$ 45,900.00
42	6" PVC Pipe, C-900 DR 18 (Gravity Sewer) 0' - 6' Depth	100	LF	$ 66.43	$ 6,642.65
43	6" PVC Pipe, C-900 DR 18 (Gravity Sewer) 6' - 8' Depth	200	LF	$ 65.32	$ 13,064.98
44	6" PVC Pipe, C-900 DR 18 (Gravity Sewer) 8' - 10' Depth	100	LF	$ 65.32	$ 6,532.49
45	6" PVC Pipe, C-900 DR 18 (Gravity Sewer) 10' - 12' Depth	50	LF	$ 74.14	$ 3,706.88
46	6" PVC Pipe, C-900 DR 18 (Gravity Sewer) 12' - 14' Depth	50	LF	$ 74.14	$ 3,706.88
47	6" PVC Pipe, C-900 DR 18 (Gravity Sewer) 14' - 16' Depth	50	LF	$ 86.92	$ 4,345.81
48	6" PVC Pipe, C-900 DR 18 (Gravity Sewer) 16' - 18' Depth	50	LF	$ 105.64	$ 5,282.17
49	8" DI Pipe, CL 350 (Gravity Sewer) 0' - 6' Depth	50	LF	$ 92.53	$ 4,626.72
50	8" DI Pipe, CL 350 (Gravity Sewer) 6' - 8' Depth	100	LF	$ 93.75	$ 9,374.62
51	8" DI Pipe, CL 350 (Gravity Sewer) 8' - 10' Depth	100	LF	$ 93.75	$ 9,374.62
52	8" DI Pipe, CL 350 (Gravity Sewer) 10' - 12' Depth	50	LF	$ 101.62	$ 5,081.13
53	8" DI Pipe, CL 350 (Gravity Sewer) 12' - 14' Depth	50	LF	$ 101.62	$ 5,081.13
54	8" DI Pipe, CL 350 (Gravity Sewer) 14' - 16' Depth	50	LF	$ 112.58	$ 5,629.18
55	8" DI Pipe, CL 350 (Gravity Sewer) 16' - 18' Depth	50	LF	$ 129.16	$ 6,458.13
56	8" PVC Pipe, C-900 DR 18 (Gravity Sewer) 0' - 6' Depth	200	LF	$ 87.14	$ 17,427.31
57	8" PVC Pipe, C-900 DR 18 (Gravity Sewer) 6' - 8' Depth	400	LF	$ 88.90	$ 35,559.65
58	8" PVC Pipe, C-900 DR 18 (Gravity Sewer) 8' - 10' Depth	400	LF	$ 88.90	$ 35,559.65
59	8" PVC Pipe, C-900 DR 18 (Gravity Sewer) 10' - 12' Depth	400	LF	$ 100.25	$ 40,098.24
60	8" PVC Pipe, C-900 DR 18 (Gravity Sewer) 12' - 14' Depth	400	LF	$ 100.25	$ 40,098.24
61	8" PVC Pipe, C-900 DR 18 (Gravity Sewer) 14' - 16' Depth	200	LF	$ 116.00	$ 23,199.70
62	8" PVC Pipe, C-900 DR 18 (Gravity Sewer) 16' - 18' Depth	200	LF	$ 139.90	$ 27,980.64
63	10" DI Pipe, CL 350 (Gravity Sewer) 0' - 6' Depth	50	LF	$ 102.28	$ 5,114.18
64	10" DI Pipe, CL 350 (Gravity Sewer) 6' - 8' Depth	100	LF	$ 103.66	$ 10,366.06
65	10" DI Pipe, CL 350 (Gravity Sewer) 8' - 10' Depth	100	LF	$ 103.66	$ 10,366.06
66	10" DI Pipe, CL 350 (Gravity Sewer) 10' - 12' Depth	50	LF	$ 111.54	$ 5,576.85
67	10" DI Pipe, CL 350 (Gravity Sewer) 12' - 14' Depth	50	LF	$ 111.54	$ 5,576.85
68	10" DI Pipe, CL 350 (Gravity Sewer) 14' - 16' Depth	50	LF	$ 122.55	$ 6,127.65
69	10" DI Pipe, CL 350 (Gravity Sewer) 16' - 18' Depth	50	LF	$ 140.84	$ 7,041.98
70	10" PVC Pipe, C-900 DR 18 (Gravity Sewer) 0' -6' Depth	100	LF	$ 81.24	$ 8,124.30
71	10" PVC Pipe, C-900 DR 18 (Gravity Sewer) 6' - 8' Depth	400	LF	$ 82.73	$ 33,092.06
72	10" PVC Pipe, C-900 DR 18 (Gravity Sewer) 8' - 10' Depth	400	LF	$ 82.73	$ 33,092.06
73	10" PVC Pipe, C-900 DR 18 (Gravity Sewer) 10' - 12' Depth	400	LF	$ 91.71	$ 36,683.28
74	10" PVC Pipe, C-900 DR 18 (Gravity Sewer) 12' - 14' Depth	400	LF	$ 91.71	$ 36,683.28
75	10" PVC Pipe, C-900 DR 18 (Gravity Sewer) 14' - 16' Depth	200	LF	$ 104.27	$ 20,853.29
76	10" PVC Pipe, C-900 DR 18 (Gravity Sewer) 16' - 18' Depth	200	LF	$ 123.10	$ 24,620.76
77	12" DI Pipe, CL 350 (Gravity Sewer) 0' - 6' Depth	50	LF	$ 115.28	$ 5,764.12
78	12" DI Pipe, CL 350 (Gravity Sewer) 6' - 8' Depth	100	LF	$ 116.44	$ 11,643.91
79	12" DI Pipe, CL 350 (Gravity Sewer) 8' - 10' Depth	100	LF	$ 116.44	$ 11,643.91

80	12" DI Pipe, CL 350 (Gravity Sewer) 10' - 12' Depth	100	LF	$ 124.54	$ 12,453.59
81	12" DI Pipe, CL 350 (Gravity Sewer) 12' - 14' Depth	100	LF	$ 124.54	$ 12,453.59
82	12" DI Pipe, CL 350 (Gravity Sewer) 14' - 16' Depth	50	LF	$ 135.33	$ 6,766.58
83	12" DI Pipe, CL 350 (Gravity Sewer) 16' - 18' Depth	50	LF	$ 151.80	$ 7,590.02
84	12" PVC Pipe, C-900 DR 18 (Gravity Sewer) 0' ' 6' Depth	100	LF	$ 93.42	$ 9,341.57
85	12" PVC Pipe, C-900 DR 18 (Gravity Sewer) 6' - 8' Depth	200	LF	$ 94.79	$ 18,958.54
86	12" PVC Pipe, C-900 DR 18 (Gravity Sewer) 8' - 10' Depth	200	LF	$ 94.79	$ 18,958.54
87	12" PVC Pipe, C-900 DR 18 (Gravity Sewer) 10' - 12' Depth	100	LF	$ 103.77	$ 10,377.07
88	12" PVC Pipe, C-900 DR 18 (Gravity Sewer) 12' - 14' Depth	100	LF	$ 103.77	$ 10,377.07
89	12" PVC Pipe, C-900 DR 18 (Gravity Sewer) 14' - 16' Depth	50	LF	$ 116.33	$ 5,816.45
90	12" PVC Pipe, C-900 DR 18 (Gravity Sewer) 16' - 18' Depth	50	LF	$ 135.06	$ 6,752.81
91	16" DI Pipe, CL 350 (Gravity Sewer) 0' - 6' Depth	200	LF	$ 147.01	$ 29,401.70
92	16" DI Pipe, CL 350 (Gravity Sewer) 6' - 8' Depth	400	LF	$ 148.55	$ 59,420.30
93	16" DI Pipe, CL 350 (Gravity Sewer) 8' - 10' Depth	400	LF	$ 148.55	$ 59,420.30
94	16" DI Pipe, CL 350 (Gravity Sewer) 10' - 12' Depth	200	LF	$ 156.26	$ 31,252.39
95	16" DI Pipe, CL 350 (Gravity Sewer) 12' - 14' Depth	200	LF	$ 156.26	$ 31,252.39
96	16" DI Pipe, CL 350 (Gravity Sewer) 14' - 16' Depth	100	LF	$ 167.33	$ 16,733.30
97	16" DI Pipe, CL 350 (Gravity Sewer) 16' - 18' Depth	100	LF	$ 183.80	$ 18,380.20
98	16" PVC Pipe, C-905 DR 18 (Gravity Sewer) 0' - 6' Depth	100	LF	$ 96.22	$ 9,622.48
99	16" PVC Pipe, C-905 DR 18 (Gravity Sewer) 6' - 8' Depth	200	LF	$ 97.66	$ 19,531.37
100	16" PVC Pipe, C-905 DR 18 (Gravity Sewer) 8' - 10' Depth	200	LF	$ 97.66	$ 19,531.37
101	16" PVC Pipe, C-905 DR 18 (Gravity Sewer) 10' - 12' Depth	100	LF	$ 106.69	$ 10,669.00
102	16" PVC Pipe, C-905 DR 18 (Gravity Sewer) 12' - 14' Depth	100	LF	$ 106.69	$ 10,669.00
103	16" PVC Pipe, C-905 DR 18 (Gravity Sewer) 14' - 16' Depth	50	LF	$ 119.25	$ 5,962.41
104	16" PVC Pipe, C-905 DR 18 (Gravity Sewer) 16' - 18' Depth	50	LF	$ 138.09	$ 6,904.28
105	18" DI Pipe, CL 350 (Gravity Sewer) 0' - 6' Depth	200	LF	$ 322.77	$ 64,553.76
106	18" DI Pipe, CL 350 (Gravity Sewer) 6' - 8' Depth	400	LF	$ 389.97	$ 155,986.56
107	18" DI Pipe, CL 350 (Gravity Sewer) 8' - 10' Depth	400	LF	$ 389.97	$ 155,986.56
108	18" DI Pipe, CL 350 (Gravity Sewer) 10' - 12' Depth	200	LF	$ 431.28	$ 86,255.28
109	18" DI Pipe, CL 350 (Gravity Sewer) 12' - 14' Depth	200	LF	$ 431.28	$ 86,255.28
110	18" DI Pipe, CL 350 (Gravity Sewer) 14' - 16' Depth	100	LF	$ 540.89	$ 54,088.56
111	18" DI Pipe, CL 350 (Gravity Sewer) 16' - 18' Depth	100	LF	$ 540.89	$ 54,088.56
112	18" PVC Pipe, C-905 DR 21 (Gravity Sewer) 0' - 6' Depth	100	LF	$ 247.86	$ 24,786.00
113	18" PVC Pipe, C-905 DR 21 (Gravity Sewer) 6' - 8' Depth	200	LF	$ 297.43	$ 59,486.40
114	18" PVC Pipe, C-905 DR 21 (Gravity Sewer) 8' - 10' Depth	200	LF	$ 334.89	$ 66,977.28
115	18" PVC Pipe, C-905 DR 21 (Gravity Sewer) 10' - 12' Depth	100	LF	$ 371.24	$ 37,123.92
116	18 PVC Pipe, C-905 DR 21 (Gravity Sewer) 12' - 14' Depth	100	LF	$ 421.36	$ 42,136.20
117	18" PVC Pipe, C-905 DR 21 (Gravity Sewer) 14' - 16' Depth	50	LF	$ 470.93	$ 23,546.70
118	18" PVC Pipe, C-905 DR 21 (Gravity Sewer) 16' - 18' Depth	50	LF	$ 533.17	$ 26,658.72
119	21" DI Pipe, CL 350 (Gravity Sewer) 0' - 6' Depth	200	LF	$ 395.47	$ 79,094.88
120	21" DI Pipe, CL 350 (Gravity Sewer) 6' - 8' Depth	400	LF	$ 477.54	$ 191,017.44
121	21" DI Pipe, CL 350 (Gravity Sewer) 8' - 10' Depth	400	LF	$ 477.54	$ 191,017.44
122	21" DI Pipe, CL 350 (Gravity Sewer) 10' - 12' Depth	200	LF	$ 596.52	$ 119,303.28
123	21" DI Pipe, CL 350 (Gravity Sewer) 12' - 14' Depth	200	LF	$ 596.52	$ 119,303.28
124	21" DI Pipe, CL 350 (Gravity Sewer) 14' - 16' Depth	100	LF	$ 596.52	$ 59,651.64
125	21" DI Pipe, CL 350 (Gravity Sewer) 16' - 18' Depth	100	LF	$ 798.66	$ 79,866.00
126	21" PVC Pipe, C-905 DR 21 (Gravity Sewer) 0' - 6' Depth	100	LF	$ 320.57	$ 32,056.56
127	21" PVC Pipe, C-905 DR 21 (Gravity Sewer) 6' - 8' Depth	200	LF	$ 384.46	$ 76,891.68
128	21" PVC Pipe, C-905 DR 21 (Gravity Sewer) 8' - 10' Depth	200	LF	$ 431.83	$ 86,365.44
129	21" PVC Pipe, C-905 DR 21 (Gravity Sewer) 10' - 12' Depth	100	LF	$ 480.30	$ 48,029.76
130	21" PVC Pipe, C-905 DR 21 (Gravity Sewer) 12' - 14' Depth	100	LF	$ 545.29	$ 54,529.20
131	21" PVC Pipe, C-905 DR 21 (Gravity Sewer) 14' - 16' Depth	50	LF	$ 608.08	$ 30,404.16
132	21" PVC Pipe, C-905 DR 21 (Gravity Sewer) 16' - 18' Depth	50	LF	$ 689.60	$ 34,480.08
133	24" DI Pipe, CL 350 (Gravity Sewer) 0' - 6' Depth	200	LF	$ 473.69	$ 94,737.60
134	24" DI Pipe, CL 350 (Gravity Sewer) 6' - 8' Depth	400	LF	$ 573.93	$ 229,573.44
135	24" DI Pipe, CL 350 (Gravity Sewer) 8' - 10' Depth	400	LF	$ 573.93	$ 229,573.44
136	24" DI Pipe, CL 350 (Gravity Sewer) 10' - 12' Depth	200	LF	$ 692.91	$ 138,581.28
137	24" DI Pipe, CL 350 (Gravity Sewer) 12' - 14' Depth	200	LF	$ 692.91	$ 138,581.28
138	24" DI Pipe, CL 350 (Gravity Sewer) 14' - 16' Depth	100	LF	$ 692.91	$ 69,290.64
139	24" DI Pipe, CL 350 (Gravity Sewer) 16' - 18' Depth	100	LF	$ 895.05	$ 89,505.00
140	24" PVC Pipe, C-905 DR 21 (Gravity Sewer) 0' - 6' Depth	100	LF	$ 370.14	$ 37,013.76
141	24" PVC Pipe, C-905 DR 21 (Gravity Sewer) 6' - 8' Depth	200	LF	$ 443.94	$ 88,788.96
142	24" PVC Pipe, C-905 DR 21 (Gravity Sewer) 8' - 10' Depth	200	LF	$ 500.13	$ 100,025.28
143	24" PVC Pipe, C-905 DR 21 (Gravity Sewer) 10' - 12' Depth	100	LF	$ 555.21	$ 55,520.64
144	24" PVC Pipe, C-905 DR 21 (Gravity Sewer) 12' - 14' Depth	100	LF	$ 629.01	$ 62,901.36

145	24" PVC Pipe, C-905 DR 21 (Gravity Sewer) 14' - 16' Depth	50	LF	$ 703.37	$ 35,168.58
146	24" PVC Pipe, C-905 DR 21 (Gravity Sewer) 16' - 18' Depth	50	LF	$ 795.36	$ 39,767.76
147	Install PVC Cleanout	10	EA	$ 1,450.00	$ 14,500.00
148	Replace PVC Cleanout with Manhole Structure	10	EA	$ 15,850.00	$ 158,500.00
149	Remove Pipe 2" or 4" (Gravity Sewer)	200	LF	$ 81.52	$ 16,303.68
150	Remove Pipe 6" or 8" (Gravity Sewer)	400	LF	$ 96.94	$ 38,776.32
151	Remove Pipe 10" or 12" (Gravity Sewer)	400	LF	$ 103.77	$ 41,508.29
152	Remove Pipe 15", 16" or 18" (Gravity Sewer)	200	LF	$ 137.70	$ 27,540.00
153	Remove Pipe 21" or 24" (Gravity Sewer)	200	LF	$ 247.86	$ 49,572.00
154	4" Pipe - Install or Adjust Service Lateral 0'-6' Deep	3	EA	$ 2,153.63	$ 6,460.88
155	4" Pipe - Install or Adjust Service Lateral 6'-8' Deep	3	EA	$ 2,203.20	$ 6,609.60
156	4" Pipe - Install or Adjust Service Lateral 8'-10' Deep	3	EA	$ 2,412.50	$ 7,237.51
157	4" Pipe - Install or Adjust Service Lateral 10'-12'Deep	3	EA	$ 2,478.60	$ 7,435.80
158	4" Pipe - Install or Adjust Service Lateral 12'-14'Deep	2	EA	$ 3,194.64	$ 6,389.28
159	4" Pipe - Install or Adjust Service Lateral 14'-16'Deep	2	EA	$ 3,304.80	$ 6,609.60
160	4" Pipe - Install or Adjust Service Lateral 16'-18' Deep	2	EA	$ 4,764.42	$ 9,528.84
161	6" Pipe - Install or Adjust Service Lateral 0'-6' Deep	3	EA	$ 2,782.64	$ 8,347.92
162	6" Pipe - Install or Adjust Service Lateral 6'-8' Deep	3	EA	$ 2,864.16	$ 8,592.48
163	6" Pipe - Install or Adjust Service Lateral 8'-10' Deep	3	EA	$ 3,084.48	$ 9,253.44
164	6" Pipe - Install or Adjust Service Lateral 10'-12' Deep	3	EA	$ 3,194.64	$ 9,583.92
165	6" Pipe - Install or Adjust Service Lateral 12'-14' Deep	2	EA	$ 4,031.86	$ 8,063.71
166	6" Pipe - Install or Adjust Service Lateral 14'-16' Deep	2	EA	$ 4,131.00	$ 8,262.00
167	6" Pipe - Install or Adjust Service Lateral 16'-18' Deep	2	EA	$ 5,915.59	$ 11,831.18
168	2" Sewer Line Manhole Connection	3	EA	$ 443.94	$ 1,331.83
169	4" Sewer Line Manhole Connection	3	EA	$ 508.39	$ 1,525.17
170	6" Sewer Line Manhole Connection	5	EA	$ 654.46	$ 3,272.30
171	8" Sewer Line Manhole Connection	5	EA	$ 859.25	$ 4,296.24
172	10" Sewer Line Manhole Connection	3	EA	$ 1,018.98	$ 3,056.94
173	12" Sewer Line Manhole Connection	3	EA	$ 1,034.40	$ 3,103.21
174	16" Sewer Line Manhole Connection	3	EA	$ 1,217.27	$ 3,651.80
175	18" Sewer Line Manhole Connection	2	EA	$ 1,668.92	$ 3,337.85
176	21" Sewer Line Manhole Connection	2	EA	$ 2,809.08	$ 5,618.16
177	24" Sewer Line Manhole Connection	2	EA	$ 3,029.40	$ 6,058.80
178	2" Inside Drop Connection	3	EA	$ 963.90	$ 2,891.70
179	4" Inside Drop Connection	3	EA	$ 1,360.48	$ 4,081.43
180	6" Inside Drop Connection	3	EA	$ 1,410.05	$ 4,230.14
181	8" Inside Drop Connection	5	EA	$ 2,423.52	$ 12,117.60
182	10" Inside Drop Connection	3	EA	$ 2,533.68	$ 7,601.04
183	12" Inside Drop Connection	3	EA	$ 2,831.11	$ 8,493.34
184	15"/16" Inside Drop Connection	3	EA	$ 3,012.88	$ 9,038.63
185	18" Inside Drop Connection	2	EA	$ 3,222.18	$ 6,444.36
186	21" Inside Drop Connection	3	EA	$ 3,866.62	$ 11,599.85
187	24" Inside Drop Connection	2	EA	$ 4,351.32	$ 8,702.64
188	Grouting Out of Service Pipe (Force Main)	30	CY	$ 600.37	$ 18,011.16
189	Disconnect & Plug 2" or 4" Pipe	5	EA	$ 594.86	$ 2,974.32
190	Disconnect & Plug 6" or 8" Pipe	5	EA	$ 914.33	$ 4,571.64
191	Disconnect & Plug 10" or 12" Pipe	5	EA	$ 1,041.01	$ 5,205.06
192	2" PVC Restrained Joint Pipe & Fittings FM, SDR 21	200	LF	$ 31.95	$ 6,389.28
193	4" PVC Pipe, C-900 DR 18 (Force Main)	500	LF	$ 33.27	$ 16,634.16
194	4" PVC Restrained Joint Pipe & Fittings FM, C-900 DR 18	100	LF	$ 40.54	$ 4,053.89
195	6" PVC Pipe, C-900 DR 18 (Force Main)	500	LF	$ 46.60	$ 23,298.84
196	6" PVC Restrained Joint Pipe & Fittings FM, C-900 DR 18	100	LF	$ 57.83	$ 5,783.40
197	8" PVC Pipe, C-900 DR 18 (Force Main)	500	LF	$ 56.02	$ 28,008.18
198	8" PVC Restrained Joint Pipe & Fittings FM, C-900 DR 18	100	LF	$ 66.26	$ 6,626.12
199	10" PVC Pipe, C-900 DR 18 (Force Main)	500	LF	$ 67.20	$ 33,598.80
200	10" PVC Restrained Joint Pipe & Fittings FM, C-900 DR 18	100	LF	$ 84.22	$ 8,421.73
201	12" PVC Pipe, C-900 DR 18 (Force Main)	300	LF	$ 81.85	$ 24,554.66
202	12" PVC Restrained Joint Pipe & Fittings FM, C-900 DR 18	100	LF	$ 100.25	$ 10,024.56
203	2" Restrained Joints	20	EA	$ 74.91	$ 1,498.18
204	4" Restrained Joints	20	EA	$ 97.49	$ 1,949.83
205	6" Restrained Joints	20	EA	$ 114.29	$ 2,285.82
206	8" Restrained Joints	20	EA	$ 162.21	$ 3,244.21
207	10" Restrained Joints	20	EA	$ 289.72	$ 5,794.42
208	12" Restrained Joints	20	EA	$ 315.06	$ 6,301.15
209	2"-4" Forcemain Pipe and Appurtenances - Over Depth Excavation	400	LF	$ 22.03	$ 8,812.80

210	6"-8" Forcemain Pipe and Appurtenances - Over Depth Excavation	500	LF	$ 22.03	$ 11,016.00
211	10"-12" Forcemain Pipe and Appurtenances - Over Depth Excavation	200	LF	$ 27.54	$ 5,508.00
212	Remove Out of Service Pipe 2" or 4" (Force Main)	500	LF	$ 18.18	$ 9,088.20
213	Remove Out of Service Pipe 6" or 8" (Force Main)	1000	LF	$ 24.24	$ 24,235.20
214	Remove Out of Service Pipe 10" or 12" (Force Main)	500	LF	$ 31.95	$ 15,973.20
215	2" Sleeved Connection	6	EA	$ 236.84	$ 1,421.06
216	4" Sleeved Connection	6	EA	$ 655.45	$ 3,932.71
217	6" Sleeved Connection	10	EA	$ 1,250.32	$ 12,503.16
218	8" Sleeved Connection	10	EA	$ 1,244.81	$ 12,448.08
219	10" Sleeved Connection	4	EA	$ 1,360.48	$ 5,441.90
220	12" Sleeved Connection	4	EA	$ 1,542.24	$ 6,168.96
221	Reverse Deadman for 2" or 4" Pipe	3	EA	$ 1,244.81	$ 3,734.42
222	Reverse Deadman for 6" or 8" Pipe	5	EA	$ 1,580.80	$ 7,903.98
223	Reverse Deadman for 10" or 12" Pipe	3	EA	$ 2,522.66	$ 7,567.99
224	DI Fittings FM C 153 (Compact Body)	2	TN	$ 23,508.14	$ 47,016.29
225	2" Air Release Assembly (In-line)	2	EA	$ 12,938.29	$ 25,876.58
226	2" Air Release Assembly (Offset)	2	EA	$ 9,027.61	$ 18,055.22
227	2" RWGV (Resilient Wedge Gate Valve) & Box	4	EA	$ 1,041.01	$ 4,164.05
228	4" RWGV & Box C 515	4	EA	$ 1,255.82	$ 5,023.30
229	6" RWGV & Box C 515	10	EA	$ 1,591.81	$ 15,918.12
230	8" RWGV & Box C 515	5	EA	$ 2,236.25	$ 11,181.24
231	10" RWGV & Box C 515	2	EA	$ 3,211.16	$ 6,422.33
232	12" RWGV & Box C 515	2	EA	$ 3,569.18	$ 7,138.37
233	Adjust Valve Box to Finished Grade (In Pavement)	5	EA	$ 517.75	$ 2,588.76
234	Adjust Valve Box to Finished Grade (Outside of Pavement)	5	EA	$ 228.03	$ 1,140.16
235	4" Line Stop	1	EA	$ 8,219.04	$ 8,219.04
236	6" Line Stop	1	EA	$ 9,460.54	$ 9,460.54
237	8" Line Stop	1	EA	$ 13,470.36	$ 13,470.36
238	10" Line Stop	1	EA	$ 15,123.87	$ 15,123.87
239	12" Line Stop	1	EA	$ 16,602.21	$ 16,602.21
240	4" x 2" Tapping Saddle Valve & Box	2	EA	$ 1,421.06	$ 2,842.13
241	4" x 4" Tapping Sleeve Valve & Box	2	EA	$ 3,189.13	$ 6,378.26
242	6" x 2" Tapping Saddle Valve & Box	2	EA	$ 1,443.10	$ 2,886.19
243	6" x 4" Tapping Sleeve Valve & Box	2	EA	$ 3,012.88	$ 6,025.75
244	6" x 6" Tapping Sleeve Valve & Box	2	EA	$ 3,772.98	$ 7,545.96
245	8" x 2" Tapping Saddle Valve & Box	2	EA	$ 1,465.13	$ 2,930.26
246	8" x 4" Tapping Sleeve Valve & Box	2	EA	$ 3,029.40	$ 6,058.80
247	8" x 6" Tapping Sleeve Valve & Box	2	EA	$ 3,453.52	$ 6,907.03
248	8" x 8" Tapping Sleeve Valve & Box	2	EA	$ 4,670.78	$ 9,341.57
249	10" x 2" Tapping Saddle Valve & Box	2	EA	$ 1,487.16	$ 2,974.32
250	10" x 4" Tapping Sleeve Valve & Box	2	EA	$ 3,056.94	$ 6,113.88
251	10" x 6" Tapping Sleeve Valve & Box	2	EA	$ 3,519.61	$ 7,039.22
252	10" x 8" Tapping Sleeve Valve & Box	2	EA	$ 4,714.85	$ 9,429.70
253	10" x 10" Tapping Sleeve Valve & Box	2	EA	$ 6,422.33	$ 12,844.66
254	12" x 2" Tapping Saddle Valve & Box	2	EA	$ 1,498.18	$ 2,996.35
255	12" x 4" Tapping Sleeve Valve & Box	2	EA	$ 3,310.31	$ 6,620.62
256	12" x 6" Tapping Sleeve Valve & Box	2	EA	$ 3,580.20	$ 7,160.40
257	12" x 8" Tapping Sleeve Valve & Box	2	EA	$ 4,522.07	$ 9,044.14
258	12" x 10" Tapping Sleeve Valve & Box	2	EA	$ 5,893.56	$ 11,787.12
259	12" x 12" Tapping Sleeve Valve & Box	2	EA	$ 8,102.27	$ 16,204.54
260	4' Dia. - Precast Manhole Standard	30	VF	$ 275.40	$ 8,262.00
261	4' Dia. - Precast Manhole Inside Drop	10	VF	$ 330.48	$ 3,304.80
262	4' Dia. - Precast Manhole Outside Drop	10	VF	$ 302.94	$ 3,029.40
263	5' Dia. - Precast Manhole Standard	30	VF	$ 330.48	$ 9,914.40
264	5' Dia. - Precast Manhole Inside Drop	10	VF	$ 385.56	$ 3,855.60
265	5' Dia. - Precast Manhole Outside Drop	10	VF	$ 347.00	$ 3,470.04
266	5' Dia. - Precast Air Release Manhole	10	VF	$ 440.64	$ 4,406.40
267	6' Dia. - Precast Manhole Standard	30	VF	$ 440.64	$ 13,219.20
268	6' Dia. - Precast Manhole Inside Drop	10	VF	$ 468.18	$ 4,681.80
269	6' Dia. - Precast Manhole Outside Drop	10	VF	$ 468.18	$ 4,681.80
270	Removal of Existing Manhole	3	EA	$ 1,184.22	$ 3,552.66
271	Remove Existing Manhole Additional	30	VF	$ 104.93	$ 3,147.82
272	Initial Excavation - 0'-6' Deep	5	EA	$ 9,253.44	$ 46,267.20
273	Initial Excavation - 6'-8' Deep	6	EA	$ 9,694.08	$ 58,164.48
274	Initial Excavation - 8'-10' Deep	6	EA	$ 10,134.72	$ 60,808.32

275	Initial Excavation - 10'-12' Deep	6	EA	$ 11,004.98	$ 66,029.90
276	Initial Excavation - 12'-14' Deep	3	EA	$ 11,597.64	$ 34,792.93
277	Initial Excavation - 14'-16' Deep	3	EA	$ 13,004.39	$ 39,013.16
278	Initial Excavation - 16'-18' Deep	2	EA	$ 13,775.51	$ 27,551.02
279	Initial Excavation - 18'-20' Deep	2	EA	$ 14,684.33	$ 29,368.66
280	Additional Excavation - 0'-6' Deep	100	LF	$ 95.01	$ 9,501.30
281	Additional Excavation - 6'-8' Deep	100	LF	$ 96.94	$ 9,694.08
282	Additional Excavation - 8'-10' Deep	100	LF	$ 103.00	$ 10,299.96
283	Additional Excavation - 10'-12' Deep	100	LF	$ 103.00	$ 10,299.96
284	Additional Excavation - 12'-14' Deep	100	LF	$ 148.06	$ 14,805.50
285	Additional Excavation - 14'-16' Deep	100	LF	$ 148.06	$ 14,805.50
286	Additional Excavation - 16'-18' Deep	50	LF	$ 209.74	$ 10,487.23
287	Additional Excavation - 18'-20' Deep	50	LF	$ 209.74	$ 10,487.23
288	Wastewater Bypass Pumping, Set up, 6" - 10" diameter	5	EA	$ 5,342.76	$ 26,713.80
289	Wastewater Bypass Pumping, Set up, 12" - 14" diameter	2	EA	$ 5,678.75	$ 11,357.50
290	Wastewater Bypass Pumping, Set up, 15" - 21" diameter	2	EA	$ 5,678.75	$ 11,357.50
291	Wastewater Bypass Pumping, Set up, 24" diameter	2	EA	$ 7,815.85	$ 15,631.70
292	Wastewater Bypass Pumping, Operation, 6" - 10" diameter	10	DAY	$ 826.20	$ 8,262.00
293	Wastewater Bypass Pumping, Operation, 12" - 14" diameter	5	DAY	$ 1,156.68	$ 5,783.40
294	Wastewater Bypass Pumping, Operation, 15" - 21" diameter	5	DAY	$ 1,569.78	$ 7,848.90
295	Wastewater Bypass Pumping, Operation, 24" diameter	2	DAY	$ 2,065.50	$ 4,131.00
296	6" Dia. Pipe Gravity Sewer Point Repair (DI Replacement Pipe)	2	EA	$ 2,211.00	$ 4,422.00
297	6" Dia. Pipe Gravity Sewer Point Repair (PVC Replacement Pipe)	5	EA	$ 2,100.00	$ 10,500.00
298	8" Dia. Pipe Gravity Sewer Point Repair (DI Replacement Pipe)	2	EA	$ 2,974.32	$ 5,948.64
299	8" Dia. Pipe Gravity Sewer Point Repair (PVC Replacement Pipe)	5	EA	$ 3,084.48	$ 15,422.40
300	10" Dia. Pipe Gravity Sewer Point Repair (DI Replacement Pipe)	2	EA	$ 3,084.48	$ 6,168.96
301	10" Dia. Pipe Gravity Sewer Point Repair (PVC Replacement Pipe)	5	EA	$ 2,974.32	$ 14,871.60
302	12" Dia. Pipe Gravity Sewer Point Repair (DI Replacement Pipe)	2	EA	$ 3,304.80	$ 6,609.60
303	12" Dia. Pipe Gravity Sewer Point Repair (PVC Replacement Pipe)	5	EA	$ 3,194.64	$ 15,973.20
304	15"/16" Dia. Pipe Gravity Sewer Point Repair (DI Replacement Pipe)	2	EA	$ 3,855.60	$ 7,711.20
305	15"/16" Dia. Pipe Gravity Sewer Point Repair (PVC Rplacement Pipe)	2	EA	$ 3,635.28	$ 7,270.56
306	18" Dia. Pipe Gravity Sewer Point Repair (DI Replacement Pipe)	2	EA	$ 4,075.92	$ 8,151.84
307	18" Dia. Pipe Gravity Sewer Point Repair (PVC Replacement Pipe)	2	EA	$ 3,855.60	$ 7,711.20
308	21" Dia. Pipe Gravity Sewer Point Repair (DI Replacement Pipe)	2	EA	$ 5,950.00	$ 11,900.00
309	21" Dia. Pipe Gravity Sewer Point Repair(PVC Replacement Pipe)	2	EA	$ 5,750.00	$ 11,500.00
310	24" Dia. Pipe Gravity Sewer Point Repair (DI Replacement Pipe)	2	EA	$ 8,262.00	$ 16,524.00
311	24" Dia. Pipe Gravity Sewer Point Repair (PVC Replacement Pipe)	2	EA	$ 7,850.00	$ 15,700.00
312	6" Dia. Pipe Gravity Sewer Point Repair - Additional Length (DI Replacement Pipe)	20	LF	$ 116.77	$ 2,335.39
313	6" Dia. Pipe Gravity Sewer Point Repair - Additional Length (PVC Replacement Pipe)	50	LF	$ 73.81	$ 3,690.36
314	8" Dia. Pipe Gravity Sewer Point Repair - Additional Length (DI Replacement Pipe)	20	LF	$ 132.19	$ 2,643.84
315	8" Dia. Pipe Gravity Sewer Point Repair - Additional Length (PVC Replacement Pipe)	100	LF	$ 83.72	$ 8,372.16
316	10" Dia. Pipe Gravity Sewer Point Repair - Additional Length (DI Replacement Pipe)	20	LF	$ 144.31	$ 2,886.19
317	10" Dia. Pipe Gravity Sewer Point Repair - Additional Length (PVC Replacement Pipe)	100	LF	$ 106.86	$ 10,685.52
318	12" Dia. Pipe Gravity Sewer Point Repair Additional Length (DI Replacement Pipe)	50	LF	$ 165.24	$ 8,262.00
319	12" Dia. Pipe Gravity Sewer Point Repair - Additional Length (PVC Replacement Pipe)	20	LF	$ 128.89	$ 2,577.74
320	15"/16" Dia. Pipe Gravity Sewer Point Repair - Additional Length (DI Replacement Pipe)	20	LF	$ 220.32	$ 4,406.40
321	15"/16" Dia. Pipe Gravity Sewer Point Repair - Additional Length (PVC Replacement Pipe)	50	LF	$ 122.28	$ 6,113.88
322	18" Dia. Pipe Gravity Sewer Point Repair - Additional Length (DI Replacement Pipe)	20	LF	$ 253.37	$ 5,067.36
323	18" Dia. Pipe Gravity Sewer Point Repair - Additional Length (PVC Replacement Pipe)	50	LF	$ 137.70	$ 6,885.00
324	21" Dia. Pipe Gravity Sewer Point Repair - Additional Length (DI Replacement Pipe)	20	LF	$ 295.00	$ 5,900.00
325	21" Dia. Pipe Gravity Sewer Point Repair - Additional Length (PVC Replacement Pipe)	50	LF	$ 245.00	$ 12,250.00
326	24" Dia. Pipe Gravity Sewer Point Repair - Additional Length (DI Replacement Pipe)	20	LF	$ 365.00	$ 7,300.00
327	24" Dia. Pipe Gravity Sewer Point Repair - Additional Length (PVC Replacement Pipe)	50	LF	$ 315.00	$ 15,750.00
328	2" Dia. Pipe Forcemain Point Repair	3	EA	$ 1,608.34	$ 4,825.01
329	4" Dia. Pipe Forcemain Point Repair	3	EA	$ 2,801.37	$ 8,404.11
330	6" Dia. Pipe Forcemain Point Repair	3	EA	$ 3,185.83	$ 9,557.48
331	8" Dia. Pipe Forcemain Point Repair	3	EA	$ 3,846.79	$ 11,540.36
332	10" Dia. Pipe Forcemain Point Repair	2	EA	$ 3,625.37	$ 7,250.73
333	12" Dia. Pipe Forcemain Point Repair	2	EA	$ 4,083.63	$ 8,167.26
334	Replace Manhole Ring & Cover (Asphalt Pavement)	5	EA	$ 1,779.08	$ 8,895.42
335	Replace Manhole Ring & Cover (Unpaved)	5	EA	$ 1,779.08	$ 8,895.42
336	Manhole Bench Replacement, 4' Diameter	2	EA	$ 600.37	$ 1,200.74
337	Manhole Bench Replacement, 5' Diameter	2	EA	$ 678.59	$ 1,357.17
338	Manhole Bench Replacement, 6' Diameter	2	EA	$ 765.61	$ 1,531.22
339	Adjust Manhole Ring & Cover to Finished Grade (In Pavement)	5	EA	$ 1,327.43	$ 6,637.14

340	Adjust Manhole Ring & Cover to Finished Grade (Outside of Pavement)	5	EA	$ 586.05	$ 2,930.26
341	Flowable Concrete Fill	100	CY	$ 203.80	$ 20,379.60
342	Roadway Base, Lime Rock, Primed, Min. LBR 100, Variable Thickness	120	CY	$ 169.65	$ 20,357.57
343	Roadway Base, Crushed Concrete/Graded Aggregate, Min. LBR 100, Variable Thickness	120	CY	$ 192.78	$ 23,133.60
344	Superpave Asphalt Base, Type B 12.5, Variable Thickness	50	TN	$ 308.45	$ 15,422.40
345	Superpave Asphalt Concrete, Type SP 9.5, Fine, Traffic Level C, Variable Thickness	100	TN	$ 385.56	$ 38,556.00
346	Superpave Asphalt Concrete, Type SP 12.5, Fine, Traffic Level C, Variable Thickness	100	TN	$ 385.56	$ 38,556.00
347	Pavement, Cement Concrete, 6" Min Thickness (Driveways)	100	SY	$ 181.76	$ 18,176.40
348	Pavement, Cement Concrete, 8" Thick	100	SY	$ 220.32	$ 22,032.00
349	Driveway Restoration, In Kind, Decorative Block	50	SY	$ 143.21	$ 7,160.40
350	Milling Existing Asphalt Pavement, 1/2" Average Depth	150	SY	$ 19.83	$ 2,974.32
351	Milling Existing Asphalt Pavement, 3/4" Average Depth	150	SY	$ 19.83	$ 2,974.32
352	Milling Existing Asphalt Pavement, 1" Average Depth	150	SY	$ 19.83	$ 2,974.32
353	Curb & Gutter, Concrete, FDOT Type D	100	LF	$ 93.64	$ 9,363.60
354	Curb & Gutter Concrete, FDOT Type F	100	LF	$ 93.64	$ 9,363.60
355	Curb & Gutter, Concrete, Miami Curb	300	LF	$ 126.68	$ 38,005.20
356	Valley Gutter, Concrete, PCED Index 1315	100	LF	$ 113.80	$ 11,379.53
357	Sidewalk, Concrete, 4" Min. Thickness, Remove and Replace	500	SF	$ 10.91	$ 5,452.92
358	Sidewalk, Concrete, 6" Min. Thickness, Remove and Replace	500	SF	$ 35.25	$ 17,625.60
359	Sodding	4500	SF	$ 5.51	$ 24,786.00
360	Sectional Liner, 6" - 24" Pipe	50	EA	$ 7,500.00	$ 375,000.00
				SUBTOTAL - POINT REPAIRS	$ 8,551,936.08
				GRAND TOTAL	$ 14,476,775.58

Bid quantities are for comparison purposes only.
This contract consists of various projects which are not yet defined and no quantities are guaranteed.

REFERENCES & MINIMUM QUALIFICATIONS

Company Experience & Capabilities

Rowland (DE), LLC is an underground utility contractor based in Pinellas Park, Florida, specializing in the construction and rehabilitation of wastewater, stormwater, and reclaimed water infrastructure.

The firm brings extensive experience in sanitary sewer rehabilitation and replacement, stormwater system installation, manhole construction and rehabilitation, pipe installation, and full surface restoration. Rowland has successfully delivered projects throughout Florida for municipal clients, consistently performing work in active residential and commercial environments that require careful coordination, traffic control, and proactive public communication.

Rowland's organizational structure is specifically designed to support simultaneous, large-scale field operations. The company operates multiple fully equipped crews supported by specialized equipment, including vactor trucks, CCTV inspection units, trenchless lining systems, and bypass pumping capabilities. This approach allows Rowland to rapidly mobilize for emergency situations while maintaining progress on ongoing planned projects.

In addition, Rowland has invested in advanced project management systems, experienced field supervisors, and highly trained crews. This ensures that even during peak workload periods, schedule commitments and quality standards are consistently achieved. Municipal partners rely on Rowland's ability to quickly adjust resources to meet shifting priorities while maintaining full compliance with local, state, and federal requirements.

Backed by strong project management, proven technical expertise, and commitment to safety and efficiency, Rowland is well-equipped to execute complex infrastructure projects while minimizing disruption to the surrounding community.

Representative Experience

Contract: As-Needed Utility Repair and Replacement Parts C&D
Owner: City of Clearwater
Contact: John Pacifici
Year Started: 2022
Year Completed: Current Contract
Contract Value: $13,000,000.00 (Year 4 Renewal)

Under this contract, Rowland performs a wide range of services including repairs on 4" to 48" diameter pipelines, manhole installations and rehabilitation, cleanout installations, and valve installations. These projects are performed in active municipal environments and require coordination with residents, traffic control, and adherence to strict City standards.

The firm's ability to successfully execute this ongoing contract demonstrates its capacity to manage multiple work orders, mobilize quickly, and deliver high-quality repairs across varying pipe sizes and conditions. Rowland's field personnel and project management team have extensive experience performing similar utility rehabilitation projects, ensuring the firm is well-equipped to complete projects of this nature efficiently and in compliance with all applicable requirements.

Contract 2: Annual As-Needed Sewer Repair FY24-26
Owner: Pinellas County
Contact: Bill Peters | 727-464-8435
Year Started: 2024
Year Completed: Current Contract
Contract Value: $15,209,703.75

Rowland currently holds an annual contract with Pinellas County for sanitary sewer repair and system extensions. This contract includes emergency, routine, and planned repair work across force mains, gravity sewer systems, and reclaimed water infrastructure.

Services performed under this contract include open-cut construction, cured-in-place pipe lining, and manhole rehabilitation. The work is completed in active municipal environments and requires rapid response capabilities, coordination with County staff, and strict adherence to regulatory and safety requirements.

Rowland's performance on this contract demonstrates the firm's ability to manage a diverse range of utility rehabilitation and construction projects, respond effectively to emergency situations, and maintain consistent production on planned work. The firm's personnel have extensive experience with similar infrastructure projects, ensuring the successful delivery of work that meets or exceeds client expectations.

Contract 3: Wastewater System Point Repairs
Owner: City of St. Pete Beach
Contact: Shawn Clark | 727-363-9227
Year Started: 2021
Year Completed: Current Contract
Contract Value: $768,936 (Current blanket P.O. totals)

Rowland currently holds a contract with the City of St. Pete Beach for wastewater system rehabilitation focused on reducing inflow and infiltration. This program includes manhole and pipeline repairs performed through open-cut point repair methods and comprehensive manhole rehabilitation.

The work is performed on this contract requires careful coordination, traffic control, and adherence to stringent regulatory and environmental requirements. Rowland's ability to execute I&I reduction programs demonstrates its expertise in identifying and addressing system deficiencies that impact wastewater system performance.

Through this contract, Rowland has demonstrated its capability to deliver targeted rehabilitation solutions, efficiently manage multiple work locations, and maintain high-quality standards. The firm's personnel have extensive experience performing similar wastewater rehabilitation projects, ensuring the successful completion of projects of this nature.

References

Reference 1:
Shawn Clark
Utilities Technician
City of St. Pete Beach
Phone: 727-580-7242
Email: sclark@stpetebeach.org

Reference 2:
John Pacifici
Senior Associate/ Project Manager
Hazen and Sawyer
Phone: 813-682-1217
Email: jpacifici@hazenandsawyer.com

Reference 3:
Kyle Matheny
Engineer
Kimley-Horn
Phone: 727-498-2560
Email: Kyle.Matheny@kimley-horn.com

Litigation & Claims Statement

Rowland (DE), LLC hereby states that the firm has no unresolved or ongoing claims or disputes in excess of $500,000 and has not been involved in litigation within the past five (5) years that would materially impact its ability to perform the requested services.

Regulatory Compliance Statement

Rowland (DE), LLC certifies that the firm is not currently in violation of any federal, state, or local statutes, rules, or regulations that would impact its operations. The firm complies with all applicable laws of the State of Florida and ordinances of the City of St. Pete Beach.

Client#: 1916902 569ROWLAINC

ACORD™ CERTIFICATE OF LIABILITY INSURANCE

DATE (MM/DD/YYYY) 3/30/2026

THIS CERTIFICATE IS ISSUED AS A MATTER OF INFORMATION ONLY AND CONFERS NO RIGHTS UPON THE CERTIFICATE HOLDER. THIS CERTIFICATE DOES NOT AFFIRMATIVELY OR NEGATIVELY AMEND, EXTEND OR ALTER THE COVERAGE AFFORDED BY THE POLICIES BELOW. THIS CERTIFICATE OF INSURANCE DOES NOT CONSTITUTE A CONTRACT BETWEEN THE ISSUING INSURER(S), AUTHORIZED REPRESENTATIVE OR PRODUCER, AND THE CERTIFICATE HOLDER.

IMPORTANT: If the certificate holder is an ADDITIONAL INSURED, the policy(ies) must have ADDITIONAL INSURED provisions or be endorsed. If SUBROGATION IS WAIVED, subject to the terms and conditions of the policy, certain policies may require an endorsement. A statement on this certificate does not confer any rights to the certificate holder in lieu of such endorsement(s).

PRODUCER	CONTACT NAME: Theresa Cerf	
McGriff Insurance Services 12485 28th Street N 3rd Floor St Petersburg, FL 33716 727-823-5551	PHONE (A/C, No, Ext): 727-823-5551	FAX (A/C, No): 888-632-8459
	E-MAIL ADDRESS: Theresa.Cerf@mcgriff.com	
	INSURER(S) AFFORDING COVERAGE	NAIC #
	INSURER A : Great American Assurance Company	26344
INSURED AllClear Underground Solutions, LLC AllClear Acquisition, LLC Rowland (DE), LLC; 8250 Bryan Dairy Rd. Suite 100; Largo, FL 33777	INSURER B : Travelers Property Casualty Co of Amer	25674
	INSURER C : Great American Insurance Co of NY	22136
	INSURER D : Westchester Surplus Lines Insurance	10172
	INSURER E : Great American Insurance Company	16691
	INSURER F : Lloyds of London - Hiscox Pro	

COVERAGES **CERTIFICATE NUMBER:** **REVISION NUMBER:**

THIS IS TO CERTIFY THAT THE POLICIES OF INSURANCE LISTED BELOW HAVE BEEN ISSUED TO THE INSURED NAMED ABOVE FOR THE POLICY PERIOD INDICATED. NOTWITHSTANDING ANY REQUIREMENT, TERM OR CONDITION OF ANY CONTRACT OR OTHER DOCUMENT WITH RESPECT TO WHICH THIS CERTIFICATE MAY BE ISSUED OR MAY PERTAIN, THE INSURANCE AFFORDED BY THE POLICIES DESCRIBED HEREIN IS SUBJECT TO ALL THE TERMS, EXCLUSIONS AND CONDITIONS OF SUCH POLICIES. LIMITS SHOWN MAY HAVE BEEN REDUCED BY PAID CLAIMS.

INSR LTR	TYPE OF INSURANCE	ADDL INSR	SUBR WVD	POLICY NUMBER	POLICY EFF (MM/DD/YYYY)	POLICY EXP (MM/DD/YYYY)	LIMITS	
A	X COMMERCIAL GENERAL LIABILITY	X	X	GLP449438104	10/01/2025	10/01/2026	EACH OCCURRENCE	$1,000,000
	CLAIMS-MADE [X] OCCUR						DAMAGE TO RENTED PREMISES (Ea occurrence)	$500,000
							MED EXP (Any one person)	$20,000
							PERSONAL & ADV INJURY	$1,000,000
	GEN'L AGGREGATE LIMIT APPLIES PER:						GENERAL AGGREGATE	$2,000,000
	POLICY [X] PRO-JECT [ ] LOC						PRODUCTS - COMP/OP AGG	$2,000,000
	OTHER:							$
E	AUTOMOBILE LIABILITY	X	X	CAP449438004	10/01/2025	10/01/2026	COMBINED SINGLE LIMIT (Ea accident)	$1,000,000
	X ANY AUTO						BODILY INJURY (Per person)	$
	OWNED AUTOS ONLY [ ] SCHEDULED AUTOS						BODILY INJURY (Per accident)	$
	X HIRED AUTOS ONLY [X] NON-OWNED AUTOS ONLY						PROPERTY DAMAGE (Per accident)	$
								$
B	X UMBRELLA LIAB [X] OCCUR	X	X	CUP6S47102225NF	10/01/2025	10/01/2026	EACH OCCURRENCE	$5,000,000
	EXCESS LIAB [ ] CLAIMS-MADE						AGGREGATE	$5,000,000
	DED [X] RETENTION $10000						Products	$5,000,000
C	WORKERS COMPENSATION AND EMPLOYERS' LIABILITY Y/N		X	WCE86581304	10/01/2025	10/01/2026	X PER STATUTE [ ] OTH-ER	
	ANY PROPRIETOR/PARTNER/EXECUTIVE OFFICER/MEMBER EXCLUDED? [Y]	N/A					E.L. EACH ACCIDENT	$1,000,000
	(Mandatory in NH) If yes, describe under DESCRIPTION OF OPERATIONS below						E.L. DISEASE - EA EMPLOYEE	$1,000,000
							E.L. DISEASE - POLICY LIMIT	$1,000,000
D	Pollution	X	X	G71152613008	10/01/2025	10/01/2026	2M Ea/4M Agg; 2,500 Ded	
G	Rented/Leased Equ	X		MZI93095100	10/01/2025	10/01/2026	250,0000	
F	Professional			ANE545600025	10/01/2025	10/01/2026	$1,000,000 / SIR $15K	

DESCRIPTION OF OPERATIONS / LOCATIONS / VEHICLES (ACORD 101, Additional Remarks Schedule, may be attached if more space is required)

Vehicles covered under Auto section: 2006 Ford F250 VIN: 1FDSX20546EC11835 2006 Ford F250 VIN: 1FDSX20526ED72698 2011 Chevy Equinox VIN: 2CNALDEC5B6376429 2012 Chevrolet Silverado VIN: 3GCPCREA8CG123038 2013 Chevrolet Silverado VIN: 1GCRCSE00DZ160027 2013 Ford F250 VIN: 1FD7X2A65CEC97357 2012 GMC Arcadia VIN: 1GKKRREDXCJ410581 2015 Chevrolet Silverado VIN: 3GCPCPEC9FG359646 2016 Hyundai Santa Fe VIN: 5XYZW4LA3GG348977 2016 Ram 2500 Tradesman VIN: 3C6TR4HT7GG280666 2016 Dodge Durango VIN: 1C4RDHDG5GC412571 (See Attached Descriptions)

CERTIFICATE HOLDER

City of St. Pete Beach
15 S. Corey Ave.
St. Pete Beach, Florida 33706

CANCELLATION

SHOULD ANY OF THE ABOVE DESCRIBED POLICIES BE CANCELLED BEFORE THE EXPIRATION DATE THEREOF, NOTICE WILL BE DELIVERED IN ACCORDANCE WITH THE POLICY PROVISIONS.

AUTHORIZED REPRESENTATIVE

© 1988-2015 ACORD CORPORATION. All rights reserved.

Ron DeSantis, Governor

Melanie S. Griffin, Secretary

Florida dbpr

STATE OF FLORIDA
DEPARTMENT OF BUSINESS AND PROFESSIONAL REGULATION

CONSTRUCTION INDUSTRY LICENSING BOARD

THE UNDERGROUND UTILITY & EXCAVATION CO HEREIN IS CERTIFIED UNDER THE PROVISIONS OF CHAPTER 489, FLORIDA STATUTES

ROWLAND, KENNETH DEAN

ROWLAND (DE), LLC
6855 102ND AVE N
PINELLAS PARK FL 33782

LICENSE NUMBER: CUC052617

EXPIRATION DATE: AUGUST 31, 2026

Always verify licenses online at MyFloridaLicense.com

ISSUED: 10/28/2024

Do not alter this document in any form.

This is your license. It is unlawful for anyone other than the licensee to use this document.

Scanned with CamScanner

VII. PUBLIC ENTITY CRIMINAL AFFIDAVIT

SWORN STATEMENT – PUBLIC ENTITY CRIMES

PURSUANT TO § 287.133 (3)(a), FLORIDA STATUTES, ON PUBLIC ENTITY CRIMES
THE FORM MUST BE SIGNED AND SWORN TO IN THE PRESENCE OF A NOTARY PUBLIC OR OTHER OFFICIAL AUTHORIZED TO ADMINISTER OATHS.

1. This sworn statement is submitted to: City of St. Pete Beach

by: Tim Roach - COO
(Print individual's name and title)

for: Rowland (DE) LLC.
(Print name of entity submitting sworn statement)

at: 8250 Bryan Dairy Rd.
(Business address)

and (if applicable), its Federal Employer Identification Number (FEIN):

59-0978899
(FEIN)
or, if the entity has no FEIN, include the Social Security Number:

(SSN)

by the individual signing this sworn statement: T. Roach
(Signature)

2. I understand that a "public entity crime" as defined in § 287.133 (1)(g), Fla. Stat., means a violation of any State or Federal law by a person with respect to and directly related to the transaction of business with any public entity or with an agency or political subdivision of any other state or of the United States including, but not limited to, any proposal or contract for goods or services, any lease for real property, or any contract for the construction or repair of a public building or public work, involving antitrust, fraud, theft, bribery, collusion, racketeering, conspiracy, or material misrepresentation.

3. I understand that "convicted" or "conviction" as defined in § 287.133 (1)(b), Fla. Stat., means a finding of guilt or a conviction of public entity crime with or without an adjudication of guilt in any Federal or State trial court of record relating to charges brought by indictment or information after July 1, 1989, as a result of a jury verdict, non-jury trial, or entry of a plea of guilty or nolo contendere.

4. I understand that an "affiliate" as defined in § 287.133 (1)(a), Fla. Stat., means:
   a. A predecessor or successor of a person convicted of a public entity crime or
   b. An entity under the control of any natural person who is active in the management of the entity and who has been convicted of a public entity crime. The term "affiliate" includes those officers, directors, executives, partners, shareholders, employees, members, and agents who are active in the management of an affiliate. The ownership by one (1) person of shares constituting a controlling interest in another person or a pooling of equipment or income among persons when not for fair market value under the arm's length agreement, shall be a prima facie case that one (1) person controls another person. A person who knowingly enters into a joint venture with a person who has been convicted of a public crime in Florida during the preceding thirty-six (36) months shall be considered an

affiliate.

5. I understand that a "person" as defined in Section 287.133 (1)(e), Fla. Stat., means any natural person or any entity organized under the laws of any state or of the United States with the legal power to enter into a binding contract and which proposals or applies to proposal on contracts let by a public entity, or which otherwise transacts or applies to transact business with a public entity. The term "person" includes those officers, directors, executives, partners, shareholders, employees, members, and agents who are active in management of an entity.

6. Based on information and belief, the **statement which I have marked below is true** in relation to the entity submitting this sworn statement (indicate which statement applies).

☑ Neither the entity submitting this sworn statement, nor any of its officers, directors, executives, partners, shareholders, employees, members, or agents who are active in the management of the entity nor any affiliate of the entity has been charged with and convicted of a public entity crime subsequent to July 1, 1989.

☐ The entity submitting this sworn statement or one (1) or more of its officers, directors, executives, partners, shareholders, employees, members, or agents who are active in the management of the entity or an affiliate of the entity has been charged with and convicted of a public entity crime subsequent to July 1, 1989.

☐ The entity submitting this sworn statement or one (1) or more of its officers, directors, executives, partners, shareholders, employees, members, or agents who are active in the management of the entity or an affiliate of the entity has been charged with and convicted of a public entity crime subsequent to July 1, 1989. However, there has been a subsequent proceeding before a Hearing Office of the State of Florida, Division of Administrative Hearings and the Final Order entered by the Hearing Officer determined that it was not in the public interest to place the entity submitting this sworn statement on the convicted vendor list (attach a copy of the final order).

I UNDERSTAND THAT THE SUBMISSION OF THIS FORM TO THE CONTRACTING OFFICE FOR THE PUBLIC ENTITY IDENTIFIED IN PARAGRAPH 1 ABOVE IS FOR THE PUBLIC ENTITY ONLY AND THAT THIS FORM IS VALID THROUGH DECEMBER 31 OF THE CALENDAR YEAR IN WHICH IT IS FILED. I ALSO UNDERSTAND THAT I AM REQUIRED TO INFORM THE PUBLIC ENTITY PRIOR TO ENTERING INTO A CONTRACT IN EXCESS OF THE THRESHOLD AMOUNT PROVIDED IN SECTION 287.017, FLORIDA STATUTES, FOR CATEGORY TWO OF ANY CHANGE IN THE INFORMATION CONTAINED IN THIS FORM.

STATE OF FLORIDA
COUNTY OF PINELLAS

The foregoing instrument was sworn to (or affirmed), subscribed, and acknowledged before me by means of ☑ physical presence or ☐ online notarization, this 6th day of April, 2026, by Tim Roach, who is personally known to me or has produced _____ as identification.

(SEAL)

Carolyn J Hamm
Notary Public – State of Florida

Carolyn J Hamm
Comm.: HH 595966
Expires: Jan. 14, 2029
Notary Public – State of Florida

(Print, Type, Stamp, or Commissioned Name of Notary Public)

VIII. NON-COLLUSION AFFADAVIT

STATE OF Florida COUNTY OF Pinellas

I state that I Tim Roach (Name and Title) of Rowland (DE) LLC. (Name of Firm),

I am authorized to make this affidavit on behalf of my firm and its owner, directors and officers. I am the person responsible in my firm for the price(s) and amount(s) of this Response, and the preparation of the Response. I state that:

1. The price(s) and amount(s) of this Response have been arrived at independently and without consultation, communication or agreement with any other Provider, potential provider, Proposal, or potential Proposal.

2. Neither the price(s) nor the amount(s) of this Response, and neither the approximate price(s) nor approximate amount(s) of this Response, have been disclosed to any other firm or person who is a Provider, potential Provider, Proposal, or potential Proposal, and they will not be disclosed before Proposal opening.

3. No attempt has been made or will be made to induce any firm or persons to refrain from submitting a Response for this contract, or to submit a price(s) higher that the prices in this Response, or to submit any intentionally high or noncompetitive price(s) or other form of complementary Response.

4. The Response of my firm is made in good faith and not pursuant to any agreement or discussion with, or inducement from, any firm or person to submit a complementary or other noncompetitive Response.

5. Rowland (DE) LLC, its affiliates, subsidiaries, officers, director, and employees (Name of Firm) are not currently under investigation, by any governmental agency and have not in the last three years been convicted or found liable for any act prohibited by State or Federal law in any jurisdiction, involving conspiracy or collusion with respect to Proposal, on any public contract, except as follows:

I state that I and the named firm understand and acknowledge that the above representations are material and important, and will be relied on by the State of Florida for which this Response is submitted. I understand and my firm understands that any misstatement in this affidavit is, and shall be treated as, fraudulent concealment from the State of Florida of the true facts relating to the submission of responses for this contract.

Name of Organization: Rowland (DE) LLC Signed By: [signature]

Print Name: Tim Roach

The foregoing instrument was sworn to (or affirmed), subscribed, and acknowledged before me by means of ☑ physical presence or ☐ online notarization, this 6th day of April, 2026, by Tim Roach, who is personally known to me or has produced _____ as identification.

(SEAL)

Carolyn J Hamm
Notary Public - State of Florida

Carolyn J Hamm
Comm.: HH 595966
Expires: Jan. 14, 2029
Notary Public - State of Florida

(Print, Type, Stamp, or Commissioned Name of Notary Public)

Document A310™ – 2010

Conforms with The American Institute of Architects AIA Document 310

Bid Bond

CONTRACTOR:
(Name, legal status and address)

Rowland (DE), LLC
8250 Bryan Dairy Road, Suite 100
Largo, FL 33777

SURETY:
(Name, legal status and principal place of business)

Everest Reinsurance Company
100 Everest Way, Warren Corporate Center
Warren, NJ 07059
Mailing Address for Notices

This document has important legal consequences. Consultation with an attorney is encouraged with respect to its completion or modification.

Any singular reference to Contractor, Surety, Owner or other party shall be considered plural where applicable.

OWNER:
(Name, legal status and address)

City of St. Pete Beach
155 Corey Avenue
St. Pete Beach, FL 33706

BOND AMOUNT: 5% Five Percent of Amount Bid

PROJECT:
(Name, location or address, and Project number, if any)

Wastewater System Rehabilitation Services including Manhole Rehabilitation, Pipe Lining and Point Repairs

The Contractor and Surety are bound to the Owner in the amount set forth above, for the payment of which the Contractor and Surety bind themselves, their heirs, executors, administrators, successors and assigns, jointly and severally, as provided herein. The conditions of this Bond are such that if the Owner accepts the bid of the Contractor within the time specified in the bid documents, or within such time period as may be agreed to by the Owner and Contractor, and the Contractor either (1) enters into a contract with the Owner in accordance with the terms of such bid, and gives such bond or bonds as may be specified in the bidding or Contract Documents, with a surety admitted in the jurisdiction of the Project and otherwise acceptable to the Owner, for the faithful performance of such Contract and for the prompt payment of labor and material furnished in the prosecution thereof; or (2) pays to the Owner the difference, not to exceed the amount of this Bond, between the amount specified in said bid and such larger amount for which the Owner may in good faith contract with another party to perform the work covered by said bid, then this obligation shall be null and void, otherwise to remain in full force and effect. The Surety hereby waives any notice of an agreement between the Owner and Contractor to extend the time in which the Owner may accept the bid. Waiver of notice by the Surety shall not apply to any extension exceeding sixty (60) days in the aggregate beyond the time for acceptance of bids specified in the bid documents, and the Owner and Contractor shall obtain the Surety's consent for an extension beyond sixty (60) days.

If this Bond is issued in connection with a subcontractor's bid to a Contractor, the term Contractor in this Bond shall be deemed to be Subcontractor and the term Owner shall be deemed to be Contractor.

When this Bond has been furnished to comply with a statutory or other legal requirement in the location of the Project, any provision in this Bond conflicting with said statutory or legal requirement shall be deemed deleted herefrom and provisions conforming to such statutory or other legal requirement shall be deemed incorporated herein. When so furnished, the intent is that this Bond shall be construed as a statutory bond and not as a common law bond.

Signed and sealed this 1st day of April, 2026.

(Witness)

Rowland (DE), LLC
(Principal) *(Seal)*

By:
(Title) CEO

(Witness) Amanda Jovino

Everest Reinsurance Company
(Surety) *(Seal)*

By:
(Title) Jessica L. Piccirillo, Attorney-in-Fact

Everest Reinsurance Company CORPORATE SEAL 1973 DELAWARE

S-0054/AS 8/10

everest™

POWER OF ATTORNEY
EVEREST REINSURANCE COMPANY and EVEREST NATIONAL INSURANCE COMPANY

KNOW ALL PERSONS BY THESE PRESENTS: That Everest Reinsurance Company and Everest National Insurance Company, corporations of the State of Delaware ("Company") having their principal offices located at 100 Everest Way, Warren Corporate Center, Warren, New Jersey, 07059, do hereby nominate, constitute, and appoint: **Jessica L. Piccirillo**

Bond No.: Bid Bond
Principal: Rowland (DE), LLC
Obligee: City of St. Pete Beach

its true and lawful Attorney(s)-in-fact to make, execute, attest, seal and deliver for and on its behalf, as surety, and as its act and deed, where required, any and all bonds and undertakings in the nature thereof, for the penal sum of no one of which is in any event to exceed UNLIMITED, reserving for itself the full power of substitution and revocation.

Such bonds and undertakings, when duly executed by the aforesaid Attorney(s)-in-fact shall be binding upon the Company as fully and to the same extent as if such bonds and undertakings were signed by the President and Secretary of the Company and sealed with its corporate seal.

This Power of Attorney is granted and is signed by facsimile under and by the authority of the following Resolutions adopted by the Board of Directors of Company ("Board") on April 21, 2016:

***RESOLVED**, that the President, any Executive Vice President, and any Senior Vice President are hereby appointed by the Board as authorized to make, execute, seal and deliver for and on behalf of the Company, any and all bonds, undertakings, contracts or obligations in surety or co-surety with others and that the Secretary or any Assistant Secretary of the Company be and that each of them hereby is authorized to attest to the execution of any such bonds, undertakings, contracts or obligations in surety or co-surety and attach thereto the corporate seal of the Company.*

***RESOLVED, FURTHER**, that the President, any Executive Vice President, and any Senior Vice President are hereby authorized to execute powers of attorney qualifying the attorney named in the given power of attorney to execute, on behalf of the Company, bonds and undertakings in surety or co-surety with others, and that the Secretary or any Assistant Secretary of the Company be, and that each of them is hereby authorized to attest the execution of any such power of attorney, and to attach thereto the corporate seal of the Company.*

***RESOLVED, FURTHER**, that the signature of such officers named in the preceding resolutions and the corporate seal of the Company may be affixed to such powers of attorney or to any certificate relating thereto by facsimile, and any such power of attorney or certificate bearing such facsimile signatures or facsimile seal shall be thereafter valid and binding upon the Company with respect to any bond, undertaking, contract or obligation in surety or co-surety with others to which it is attached.*

IN WITNESS WHEREOF, Everest Reinsurance Company and Everest National Insurance Company have caused their corporate seals to be affixed hereto, and these presents to be signed by their duly authorized officers this 22nd day of March 2023.

Everest Reinsurance Company and Everest National Insurance Company

By: Anthony Romano, Senior Vice President

On this **22nd of March 2023**, before me personally came Anthony Romano, known to me, who, being duly sworn, did execute the above instrument; that he knows the seal of said Company; that the seal affixed to the aforesaid instrument is such corporate seal and was affixed thereto; and that he executed said instrument by like order.

LINDA ROBINS
Notary Public, State of New York
No 01R06239736
Qualified in Queens County
Term Expires April 25, 2027

Linda Robins, Notary Public

I, Sylvia Semerdjian, Assistant Secretary of Everest Reinsurance Company and Everest National Insurance Company do hereby certify that I have compared the foregoing copy of the Power of Attorney and affidavit, and the copy of the Section of the bylaws and resolutions of said Corporation as set forth in said Power of Attorney, with the ORIGINALS ON FILE IN THE HOME OFFICE OF SAID CORPORATION, and that the same are correct transcripts thereof, and of the whole of the said originals, and that the said Power of Attorney has not been revoked and is now in full force and effect.**IN WITNESS WHEREOF**, I have hereunto set my hand and affixed the seal of said Company, this 1st day of April 2026.

By: Sylvia Semerdjian, Assistant Secretary

ES 00 01 04 16

EXHIBIT "D"

Conditional Federal/Grant-Funded Contract Addendum

(Place Conditional Federal/Grant-Funded Contract Addendum behind this page)

EXHIBIT "D"
CONDITIONAL FEDERAL/GRANT-FUNDED CONTRACT ADDENDUM

1. Applicability

1.1 This Exhibit applies only if activated under Section 25 of the Agreement or under a Task Order. If not activated, this Exhibit is reserved and has no operative effect.
1.2 If activated, this Exhibit supplements the Agreement and applies to the federally funded or grant-funded Work only. Contractor shall comply with all applicable requirements of the federal award, grant agreement, pass-through entity, program rules, and applicable law.
1.3 The City may provide additional award-specific clauses, certifications, forms, wage determinations, reporting requirements, or flow-down provisions. Contractor shall comply with such requirements as a condition of performing the affected Work and receiving payment from the applicable funding source.

2. Federal Award and Grant Information

Federal/Grant Program: [insert]
Federal Awarding Agency: [insert]
Pass-Through Entity: [insert, if applicable]
Assistance Listing Number: [insert, if applicable]
Federal Award Identification Number: [insert, if applicable]
Award or Disaster Declaration Date: [insert, if applicable]
Project Number: [insert]
Special Award Conditions: [insert or attach]

3. Remedies for Breach

For contracts exceeding the simplified acquisition threshold, Contractor acknowledges that the City may exercise all administrative, contractual, legal, and equitable remedies available under the Contract Documents and applicable law if Contractor violates or breaches contract terms. Remedies may include withholding payment, requiring correction, suspension of Work, termination, procurement from alternate sources, damages, sanctions, and any other appropriate remedy.

4. Termination for Cause and Convenience

For contracts in excess of $10,000, the City may terminate the federally funded or grant-funded Work for cause or convenience as provided in the Agreement. The notice of termination will identify the effective date and the manner of termination. Contractor shall be paid only for authorized Work satisfactorily performed before the effective date of termination, subject to documentation, offsets, allowable cost requirements, and applicable grant rules.

5. Equal Employment Opportunity

Except as otherwise provided under 41 C.F.R. Part 60, if the Work is a federally assisted construction contract as defined in 41 C.F.R. § 60-1.3, Contractor shall comply with the equal opportunity clause in 41 C.F.R. § 60-1.4(b), which is incorporated by reference as if fully set forth

RESERVED

herein, and shall include the required clause in covered subcontracts and purchase orders.

6. Davis-Bacon Act and Copeland Anti-Kickback Act

When required by federal program legislation, all prime construction contracts in excess of $2,000 must include compliance with the Davis-Bacon Act, 40 U.S.C. §§ 3141-3148, as supplemented by Department of Labor regulations at 29 C.F.R. Part 5. If Davis-Bacon applies, Contractor shall pay laborers and mechanics at rates not less than the applicable wage determination, pay wages not less than once per week, submit certified payrolls if required, and comply with all applicable labor standards.
If Davis-Bacon applies, Contractor shall also comply with the Copeland "Anti-Kickback" Act, 40 U.S.C. § 3145, as supplemented by 29 C.F.R. Part 3, and shall not induce any person employed in the construction, completion, or repair of public work to give up any part of compensation to which the person is entitled. Contractor shall report suspected or reported violations to the City.

7. Contract Work Hours and Safety Standards Act

Where applicable, for contracts in excess of $100,000 that involve the employment of mechanics or laborers, Contractor shall comply with 40 U.S.C. §§ 3702 and 3704, as supplemented by Department of Labor regulations at 29 C.F.R. Part 5. Contractor shall compute wages based on a standard 40-hour workweek and shall compensate covered workers at not less than one and one-half times the basic rate of pay for hours worked in excess of 40 hours in a workweek. No laborer or mechanic shall be required to work under unsanitary, hazardous, or dangerous conditions. These requirements do not apply to purchases of supplies, materials, or articles ordinarily available on the open market, or to contracts for transportation or transmission of intelligence.

8. Rights to Inventions

If the federal award meets the definition of "funding agreement" under 37 C.F.R. § 401.2(a), and the Work involves substitution of parties, assignment, or performance of experimental, developmental, or research work under that funding agreement, Contractor shall comply with 37 C.F.R. Part 401 and any implementing regulations issued by the awarding agency.

9. Clean Air Act and Federal Water Pollution Control Act

For contracts and subgrants exceeding $150,000, Contractor shall comply with all applicable standards, orders, and regulations issued pursuant to the Clean Air Act, 42 U.S.C. §§ 7401-7671q, and the Federal Water Pollution Control Act, 33 U.S.C. §§ 1251-1387. Contractor shall report each violation to the City, and the City will report violations as required to the federal awarding agency and the appropriate EPA regional office. Contractor shall include these requirements in each covered subcontract exceeding $150,000.

10. Debarment and Suspension

Contractor shall comply with Executive Orders 12549 and 12689 and 2 C.F.R. Part 180. Contractor shall not enter into covered transactions with parties listed on the governmentwide exclusions in the System for Award Management. Contractor shall verify that Contractor, its principals, and its affiliates are not excluded or disqualified and shall include this requirement in lower-tier covered

RESERVED

transactions.

11. Byrd Anti-Lobbying Amendment

For awards exceeding $100,000, Contractor shall comply with the Byrd Anti-Lobbying Amendment, 31 U.S.C. § 1352. Contractor shall certify that it has not and will not use federal appropriated funds to pay any person or organization for influencing or attempting to influence an officer or employee of an agency, a member of Congress, an officer or employee of Congress, or an employee of a member of Congress in connection with obtaining a federal contract, grant, or other covered award. Contractor shall disclose lobbying with non-federal funds as required and shall require each lower tier to make the same certification and disclosure.

12. Procurement of Recovered Materials

Contractor shall comply with 2 C.F.R. § 200.323 and Section 6002 of the Solid Waste Disposal Act, as amended by the Resource Conservation and Recovery Act, to the extent applicable. Contractor shall procure designated items containing the highest percentage of recovered materials practicable, consistent with competition and performance requirements, when the purchase price exceeds the applicable threshold or the value of the quantity acquired during the preceding fiscal year exceeded the applicable threshold. Contractor shall also procure solid waste management services in a manner that maximizes energy and resource recovery and shall support the City's affirmative procurement program where applicable.

13. Domestic Preferences for Procurements

As appropriate and to the extent consistent with law, Contractor shall comply with 2 C.F.R. § 200.322 by providing a preference for the purchase, acquisition, or use of goods, products, or materials produced in the United States, including iron, aluminum, steel, cement, and other manufactured products, when the Work is performed under a federal award.

14. Prohibition on Certain Telecommunications and Video Surveillance Equipment or Services

Contractor shall comply with 2 C.F.R. § 200.216 and shall not obligate or expend federal funds to procure, obtain, extend, renew, or enter into a contract to procure or obtain covered telecommunications equipment or services as a substantial or essential component of any system or as critical technology as part of any system. Contractor shall include this prohibition in applicable subcontracts and purchase orders.

15. Build America, Buy America

If the Work is an infrastructure project funded by a federal financial assistance program subject to the Build America, Buy America Act, Contractor shall comply with all applicable domestic content procurement preference requirements for iron, steel, manufactured products, and construction materials permanently incorporated into the project, unless a waiver applies. Contractor shall provide certifications, documentation, and product information required by the City, funding agency, or pass-through entity.

16. Small and Minority Businesses, Women's Business Enterprises, Veteran-Owned Businesses,

RESERVED

and Labor Surplus Area Firms

Contractor shall take the affirmative steps required by 2 C.F.R. § 200.321 to assure that small businesses, minority businesses, women's business enterprises, veteran-owned businesses, and labor surplus area firms are used when possible, including, as applicable, placing such businesses on solicitation lists, soliciting them when they are potential sources, dividing requirements when economically feasible, establishing delivery schedules that encourage participation, using appropriate assistance organizations, and requiring subcontractors to take the same affirmative steps.

17. Bonding Requirements for Federal Construction or Facility Improvement Contracts

For construction or facility improvement contracts or subcontracts exceeding the simplified acquisition threshold, Contractor shall comply with the bonding requirements in 2 C.F.R. § 200.326 when the federal award requires such bonding, including bid guarantee, performance bond, and payment bond requirements unless the federal agency or pass-through entity determines that the City's bonding policy and requirements adequately protect the federal interest.

18. Access to Records; Retention

Contractor shall provide the City, the federal awarding agency, the pass-through entity, the Comptroller General of the United States, and their authorized representatives access to any documents, papers, records, and other materials that are directly pertinent to the federal or grant-funded Work for the purpose of making audits, examinations, excerpts, and transcriptions. Contractor shall retain records for the period required by 2 C.F.R. Part 200, the award terms, the Agreement, and applicable law, whichever is longer.

19. No Obligation by Federal Government

The federal government is not a party to this Agreement or any Task Order and is not subject to any obligations or liabilities to the City, Contractor, or any other party arising from the Agreement or Work.

20. Program Fraud and False or Fraudulent Statements

Contractor acknowledges that 31 U.S.C. Chapter 38 and other federal laws concerning fraud, false claims, and false statements may apply to Contractor's actions pertaining to federally funded or grant-funded Work. Contractor shall not submit false, fictitious, fraudulent, or misleading claims, certifications, invoices, records, or statements.

21. Additional Award-Specific Terms

If the federal awarding agency, pass-through entity, grant agreement, disaster assistance program, or other funding source requires additional clauses, certifications, forms, reporting, wage determinations, environmental/historic preservation conditions, civil rights provisions, procurement certifications, or other requirements, such requirements are incorporated into the affected Task Order upon written notice by the City. Contractor shall execute additional documents reasonably required by the City to document compliance.

RESERVED

CITY COMMISSION MEETING
CITY OF ST. PETE BEACH
COMMISSION CHAMBERS

Agenda Report

Agenda Title Name: Authorize the City Manager to execute the Agreement with SAK Construction, LLC for Wastewater System Rehabilitation Services on an as-needed basis in an amount not to exceed annually appropriated funding.

Action Request: Motion to authorize the City Manager to execute the Agreement with SAK Construction, LLC for Wastewater System Rehabilitation Services on an as-needed basis in an amount not to exceed annually appropriated funding.

Strategic Objective: Reliable Infrastructure

Date: June 23, 2026

Prepared By: Camden Mills, Public Services Director

Through: Frances Robustelli, City Manager

Summary of Issue: The City publicly advertised a Request for Proposals (RFP) for Wastewater System Rehabilitation Services, including manhole rehabilitation, pipe lining, and point repairs. Fifteen (15) responsive proposals were received on April 8, 2026. Following evaluation, the City's selection committee recommended award to Flotech Environmental LLC, Hinterland Group, LLC, RCM Utilities, LLC, Rowland (DE), LLC, and SAK Construction, LLC based on the following criteria:

- Qualifications and Experience
- References and Past Performance
- Capacity to Perform the Work
- Cost

The contract provides not-to-exceed unit prices for wastewater system manhole rehabilitation, cured-in-place pipe (CIPP) lining, and point repairs on an as-needed basis, allowing the City to efficiently address defects identified through routine inspections, CCTV assessments, emergency response activities, regulatory requirements, and ongoing asset management programs.

Work will be authorized by task order on an as-needed basis in an amount not to exceed annually budgeted funding. The initial contract term is three (3) years with the option for two (2) additional one (1) year renewals upon mutual agreement and annual appropriation of funds.

Approval of this agreement will provide the City with qualified contractors to perform wastewater rehabilitation services that reduce inflow and infiltration, improve system reliability, extend asset service life, and support the City's wastewater capital improvement and maintenance programs.

Funding: 401.5350.565000 Wastewater Capital Improvements (remaining balance $2,746,041.85)

401.5350.546007 – Wastewater Repair (remaining balance $279,990.50)

Attachments: 1. SAK Services Agreement Signed

Docusign Envelope ID: AFCB16A4-B390-89EA-8013-04580053D90F

CITY OF ST. PETE BEACH, FLORIDA
SERVICES AGREEMENT

Wastewater System Rehabilitation Services

This is an Agreement (the "Agreement") entered into by and between the **CITY OF ST. PETE BEACH** (hereinafter "City") and **SAK CONSTRUCTION, LLC.** (hereinafter "Contractor"). The City and Contractor together shall be referred to as the "parties."

WHEREAS, The City properly issued a Request for Proposals, attached and incorporated hereto as Exhibit "B" and the City Commission authorized the selection of Contractor at its 06/23/2026, public hearing.

WHEREAS, City desires to purchase from Contractor the services described in this Agreement.

WHEREAS, Contractor is in the business of providing the services described herein, and has submitted an appropriate proposal to the City to provide the same.

WHEREAS, this Agreement has been properly approved by the appropriate authority of the City and the Contractor.

NOW, THEREFORE, upon the mutual covenants contained herein, and other good and valuable considerations, the sufficiency of which is hereby acknowledged, the parties hereto hereby agree to the following:

1. Recitals. The foregoing recitals are true and correct and incorporated herein by reference.

2. Standard Contract Addendum. The attached Standard Contract Addendum, which contains all the Florida Statutorily required provisions applicable to this Agreement, is attached hereto as Exhibit "A" and its provisions modify and supplement this Agreement.

3. Scope of Services. The Contractor must perform all work for the City required by the contract documents as set forth below:

a. Contractor will furnish all labor, materials, and equipment necessary as indicated in the Request for Bids (Exhibit "B") in the amount of Not To Exceed the Annual Budgeted amount. Funding will be awarded by Task Orders.

b. Contractor must supervise the workforce to ensure that all workers conduct themselves and perform their work in a safe and professional manner. Contractor must comply with all OSHA safety rules and regulations in the operation of equipment and in the performance of the work. Contractor must at all times have a competent field supervisor on the job site to enforce these policies and procedures at the Contractor's expense.

c. Contractor will provide the City with seventy-two (72) hours written notice prior to the beginning of work under this Agreement and prior to any schedule change with the exception of changes caused by inclement weather.

d. Contractor must comply with any and all Federal, State, and local laws and regulations

Docusign Envelope ID: AFCB16A4-B390-89EA-8013-04580053D90F

now in effect, or hereinafter enacted during the term of this Agreement, which are applicable to the Contractor, its employees, agents or subcontractors, if any, with respect to the work and services described herein. The Contractor further warrants that there has been no violation of copyrights or patent rights either in the United States of America or in foreign countries in connection with the work of the contract.

e. Contractor warrants to the City that all goods and materials furnished under the contract will be new unless otherwise specified and that contractor possesses good, clear, and marketable title to said goods and there are no pending liens, claims, or encumbrances whatsoever against said goods. All work not conforming to these requirements, including substitutions not properly approved and authorized may be considered defective. Contractor further warrants that all goods, materials and workmanship furnished, whether furnished by the Contractor or its subcontractors and suppliers, will comply with the specifications, drawings and other descriptions supplied or adopted. Last, Contractor warrants all material and workmanship for a minimum of (1) year from date of project completion and acceptancy by the City. If within one (1) year after acceptance by the City, or within such larger period of time as may be prescribed by law any of the work is found to be defective or not in accordance with the contract documents, the Contractor will, after receipt of a written notice from the City to do so, promptly correct the work.

4. Damages. Time is of the essence in the performance of this Agreement. City shall be entitled to liquidated damages in the amount of $500 per day, for each day after the date set forth in paragraph 10, that Contractor has failed to properly and completely deliver all goods or provide all service specified herein. The Contractor specifically acknowledges that the foregoing sum is reasonable and does not constitute a penalty.

5. Remedies.

   a. Damages. The City reserves the right to recover any ascertainable actual damages incurred as a result of the failure of the Contractor to perform in accordance with the requirements of this Agreement, or for losses sustained by the city resultant from the Contractor's failure to perform in accordance with the requirements of this Agreement.

   b. Correction of Work. If, in the judgment of the City, work provided by the Contractor does not conform to the requirements of this Agreement, or if the work exhibits poor workmanship, the city reserves the right to require that the Contractor correct all deficiencies in the work to bring the work into conformance without additional cost to the City, and/or replace any personnel who fail to perform in accordance with the requirements of this Agreement. The City is the sole judge of non-conformance and the quality of workmanship.

6. Waiver of Liens. Prior to final payment of the Contract Sum, a final waiver of lien must be submitted by all suppliers, subcontractors, and/or Contractors who worked on the project that is the subject of this Agreement.

7. Warranties.
   a. Warranty of Title. Contractor warrants to the City that all goods and materials furnished

Docusign Envelope ID: AFCB16A4-B390-89EA-8013-04580053D90F

under the contract will be new unless otherwise specified and that Contractor possesses good, clear, and marketable title to said goods and there are no pending liens, claims, or encumbrances whatsoever against said goods. All work not conforming to these requirements, including substitutions not properly approved and authorized may be considered defective.

b. Warranty of Specifications. The Contractor warrants that all goods, materials, workmanship furnished, whether by the Contractor or its subcontractors and suppliers, will comply with the specifications, drawings and other descriptions supplied or adopted.

c. Warranty of Merchantability. The Contractor warrants all material and workmanship for a minimum of one (1) year from date of project completion and acceptance by the City. If within one (1) year after acceptance by the city, or within such larger period of time as may be described by law any of the work is found to be defective or not in accordance with the contract documents, the Contractor must after receipt of a written notice from the City to do so, promptly correct the work unless the City has previously given the Contractor a written acceptance of such condition.

8. Term. This Agreement will remain in effect for a period of (3) three years with (2) two, (1) one-year extensions from the Effective Date.

9. Effective date. The "Effective Date" of this Agreement shall be the date this Agreement has been executed by all parties.

10. Termination. This Agreement may be canceled by the City when:
   a. Sufficient funds are not available to continue its full and faithful performance to the Agreement.
   b. Sub-standard or non-performance of Agreement.
   c. The City wishes to terminate the Agreement at any time and for any reason, upon giving thirty (30) days prior written notice to the Contractor.

11. Fiscal Non-funding. If funds for the requested services described herein are not appropriated via the annual budget adoption process, the City reserves the right to cancel the Agreement immediately upon written notice to the Contractor.

12. Non-Exclusivity. Contractor acknowledges that the City may enter into agreements with other consultants or may have its own employees complete the work for services similar to the services that are subject to this Agreement.

13. Compensation. Upon Contractor's satisfactory full performance of the services or in accordance with the payment schedule provided in the attached proposal, City shall pay Contractor, as full consideration for services provided in this Agreement.

14. Insurance. To the extent that this Agreement requires Contractor to provide any services of any kind, Contractor and all of Contractor's subcontractors shall maintain public liability insurance in a combined single limit for bodily injury and property damage in the amount of not less than $1,000,000.00, satisfactory to the City Manager, naming the City as an additionally named insured and providing coverage up through and including the final performance of any services provided

Docusign Envelope ID: AFCB16A4-B390-89EA-8013-04580053D90F

herein. Contractor and all of Contractor's subcontractors shall maintain in full force and effect a policy of worker's compensation insurance for all of Contractor's employees in accordance with applicable state and federal law. Said insurance coverage shall include employer's liability with a single limit of $100,000.00 per accident or occurrence. Contractor shall present City with a certificate for all the foregoing insurance, at the time of executing this Agreement and at such other times requested by the City.

The Contractor waives all rights against the City, its consultants, separate contractors, if any, and any of its subcontractors, agents and employees, for any and all damages caused to the extent covered by insurance described herein and obtained pursuant to this Section or other property insurance applicable to the services and product provided under this Agreement. The City shall require of the Contractor, Contractor's consultants, separate contractors, if any, and the subcontractors, sub-subcontractors, agents and employees of any of them, by appropriate agreements, written where legally required for validity, similar waivers each in favor of other parties enumerated herein. The policies shall provide such waiver of subrogation by endorsement otherwise. A waiver of subrogation shall be effective as to a person or entity even though that person or entity would otherwise have a duty of indemnification, contractual or otherwise, did not pay the insurance premium directly or indirectly, and whether or not the person or entity had an insurable interest in the property damaged.

15. Indemnification. In consideration of the payment of ten dollars as part of the compensation described herein, such sum being specifically found by Contractor to be sufficient consideration for this indemnification, Contractor shall indemnify, defend and hold the City harmless for itself, its past/present/future elected and appointed officials, its employees, agents and assigns, from and against any and all losses, claims, damages, suits, actions, liability or demands, including attorneys' fees and costs of litigation through all appellate proceedings, arising from the performance or non-performance of this Agreement, whether caused in part by the City or not, and in connection with violations of copyrighted or trademarked materials used by Contractor, loss of life, bodily or personal injury, or property damage, including loss of use thereof, directly or indirectly caused by, resulting from, arising out of or occurring in connection with the operations of the Contractor or its officers, employees, agents, subcontractors, or independent Contractors, excepting only such loss of life, bodily or personal injury, or property damage solely attributable to the gross negligence or willful misconduct of the City or its elected or appointed officials and employees. In any and all claims against the City, or any of their agents or employees by any employee of the Contractor any subcontractor, anyone directly or indirectly employed by any of them or anyone for whose acts any of them may be liable, the indemnification obligation under this paragraph is not limited in any way by any limitation in this amount or type of damages compensation or benefits payable by or for the Contractor or any subcontractor under Workers' Compensation Acts, Disability Benefit Acts or other Employee Benefit Acts. Nothing contained herein is intended nor may it be construed, to waive City's rights and immunities under the common law or Section 768.28, Florida Statutes, as amended from time to time; nor will anything included herein be construed as consent to be sued by any third parties in any matter arising out of this Agreement. To the extent considered necessary by the Contract Administrator and the City Attorney, any sums due Contractor under this Agreement may be retained by the City until all of the City's claims subject to this indemnification obligation have been settled or otherwise resolved, and any amount withheld is not subject to payment of interest by the City. The above provisions

Docusign Envelope ID: AFCB16A4-B390-89EA-8013-04580053D90F

will survive the termination or expiration of this Agreement and will pertain to any occurrence during the term of this Agreement, even though the claim may be made after the termination or expiration hereof.

16. Discriminatory Vendor List. Contractor hereby acknowledges its continuous duty to disclose to the City if the Contractor or any of its affiliates, as defined by Section 287.134 (1)(a), Florida Statutes, are placed on the Discriminatory Vendor List. Pursuant to Section 287-134 (2)(a), Florida Statutes: "An entity or affiliate who has been placed on the discriminatory vendor list may not submit a bid, proposal, or reply on a contract to a public entity; may not submit a bid or proposal, or reply on a contract with a public entity for the construction or repair of a public building or public work; may not submit bids, proposals, or replies on leases of real property to a public entity; may not be awarded or perform work as a contractor, supplier, subcontractor, or consultant under a contract with any public entity; and may not transact business with any public entity."

17. Independent Contractor. This Agreement does not create an employee/employer relationship between the parties. It is the intent of the parties that the Contractor is an independent contractor under this Agreement and not the City's employee for any purposes, including but not limited to, the application of the Fair Labor Standards Act minimum wage and overtime payments, Federal Insurance Contribution Act, the Social Security Act, the Federal Unemployment Tax Act, the provisions of the Internal Revenue Code, the State Worker's Compensation Act, and the State Unemployment Insurance law. The Contractor will retain sole and absolute discretion in the judgment of the manner and means of carrying out Contractor's activities and responsibilities hereunder provided, further that administrative procedures applicable to services rendered under this Agreement will be those of Contractor, which policies of Contractor will not conflict with City, State, or United States policies, rules, or regulations relating to the use of Contractor's funds provided for herein. The contractor agrees that it is a separate and independent enterprise from the City, that it had full opportunity to find other business, that it has made its own investment in it business, and that it will utilize a high level of skill necessary to perform the work. This Agreement must not be construed as creating any joint employment relationship between the Contractor and the City and the City will not be liable for any obligation incurred by Contractor, including but not limited to unpaid minimum wages and/or overtime premiums.

18. Audit Rights. The City reserves the right to audit the records of the Contractor for the commodities and/or serves provided under the contract at any time during the performance and term of the contract and for a period of five (5) years after completion and acceptance by the City. If required by the City, the Contractor agrees to submit to an audit by an independent certified public accountant selected by the City. The Contractor must allow the City to inspect, examine and review the records of the Contractor in relation to this Agreement at any an all times during normal business hours during the term of the Agreement.

19. Exhibits. The following Exhibits shall be attached, incorporated, and made a part of this Agreement:

a. Standard Contract Addendum (Exhibit "A")
b. Request for Bid/Proposal (Exhibit "B")
c. Vendor Bid/Proposal (Exhibit "C")

Docusign Envelope ID: AFCB16A4-B390-89EA-8013-04580053D90F

d. Conditional Federal/Grant-Funded Contract Addendum (Exhibit "D")

20. Notices. All notices sent pursuant to this Agreement shall be given in writing via certified mail or overnight courier and shall be delivered to the following addresses:

As to Contractor:	**As to City:**
SAK Construction, LLC.	City Manager
864 Hoff Road	City of St. Pete Beach
O'Fallon, MO 63366	155 Corey Avenue
	St. Pete Beach, FL 33706
With Copy To:	**With Copy To:**
Bidcippe@sakcon.com	attorney@stpetebeach.org

21. Conflicts and Severability. To the extent that any terms in the attached proposal conflict with the terms of this Agreement, the terms of this Agreement shall control and supersede such conflicting terms in the attached proposal, to the extent of such conflict. If any section, part of section, paragraph, clause, phrase, or word of this Agreement is declared invalid, the remaining provisions of this Agreement shall not be affected.

22. Amendments. This document and exhibits embody the entire Agreement of the parties. There are no promises, terms, conditions, or representations binding on either party hereto, other than those contained herein; and this document shall supersede all previous communications, representations, and/or agreements between the parties hereto, whether written or oral. This Agreement shall not be modified by any oral statement, communication, Agreement, course of conduct, or by anything other than a writing signed by the parties. This Agreement may be amended or modified only in writing signed by all parties hereto.

23. Jurisdiction, Venue, Attorney Fees. This Agreement shall be governed and construed according to the laws of Florida, and venue for any action arising herefrom shall be in Pinellas County, Florida. The prevailing party in any action to enforce or interpret this Agreement shall be entitled to reasonable attorney's fees incurred through all appellate proceedings.

24. Assignment. This Agreement shall be binding upon the parties, their successors, assigns, and legal representatives. Contractor shall not assign or otherwise transfer any of the rights or duties under this Agreement, without the express written consent of the City.

25. Counterparts. This Agreement may be executed and delivered in any number of counterparts, each of which so executed and delivered shall be deemed to be an original and all of which shall constitute one and the same instrument. Facsimile, documents executed, scanned and transmitted electronically and electronic signatures shall be deemed original signatures for purposes of this Agreement and all matters related thereto, with such facsimile, scanned and electronic signatures having the same legal effect as original signatures.

26. Authority. Contractor hereby acknowledges that the person executing this Agreement on behalf of Contractor has the full authority to do so and to bind Contractor to the terms hereof.

Docusign Envelope ID: AFCB16A4-B390-89EA-8013-04580053D90F

IN WITNESS WHEREOF, the Parties have executed this Agreement on the day and year set forth below.

Under penalties of perjury, and pursuant to Sec. 92.525, Fla. Stat., Contractor declares that Contractor has read the Section 15 of the Standard Contract Addendum, Exhibit "A", and that the facts stated in it are true.

SAK Construction, LLC:	**City of St. Pete Beach:**
Signature: Tim Bussen	Signature: _____
By: Tim Bussen	By: Frances Robustelli
Its: Vice President	Its: City Manager
Date: 6/1/2026	Date: _____
APPROVED AS TO FORM AND LEGAL SUFFICIENCY:	ATTEST:
_____	_____
Ralf Brookes City Attorney	Renee Rose City Clerk

Docusign Envelope ID: AFCB16A4-B390-89EA-8013-04580053D90F

EXHIBIT "A"

Standard Contract Addendum

(Place Standard Contract Addendum behind this page)

Docusign Envelope ID: AFCB16A4-B390-89EA-8013-04580053D90F

CITY OF ST. PETE BEACH, FLORIDA
STANDARD CONTRACT ADDENDUM

THIS STANDARD CONTRACT ADDENDUM is made and entered into this _____ day of _____, 2026, by and between the CITY OF ST. PETE BEACH, a Florida municipality, hereinafter referred to as the "City", and _____, hereinafter referred to as "Contractor", concerning that certain agreement dated the ____ day of _____, 2026 ("Agreement") and titled _____.

WITNESSETH:

WHEREAS, Section 119.0701, Fla. Stat., requires that certain public agency contracts must include certain statutorily required provisions concerning the contractor's compliance for Florida's Public Records Act; and

WHEREAS, Section 768.28, Fla. Stat., sets forth certain mandatory limitations on indemnification and liability for Florida public agencies; and

WHEREAS, Florida law requires that public agency contracts be subject to non-appropriation and thereby contingent upon appropriation during the public agency's statutorily mandated annual budget approval process; and

WHEREAS, Section 448.095, Fla. Stat., imposes certain obligations on public agencies with regard to the use of the E-Verify system by their contractors and subcontractors; and

WHEREAS, Section 287.133 and 287.135, Fla. Stat., provides restrictions on local governments contracting with companies that are on certain Scrutinized Companies lists or convicted vendor list; and

WHEREAS, additional terms required by Sections 282.3185(5) and (6) Fla. Stat. related to data management and Section 287.05701 Fla. Stat. related to social government and corporate activism are also added by virtue of this Addendum; and

WHEREAS, Section 286.101, Florida Statutes contains a list of "foreign countries of concern" including, the People's Republic of China, the Russian Federation, the Islamic Republic of Iran, the Democratic People's Republic of Korea, the Republic of Cuba, the Venezuelan regime of Nicolás Maduro, or the Syrian Arab Republic, including any agency of or any other entity under significant control of such "foreign country of concern". Any entity that does business with a state agency or political subdivision must disclose certain of their dealings with those "foreign countries of concern" to the Florida Department of Financial Services; and

WHEREAS, Section 787.06(13), Fla. Stat. provides that when a contract is executed, renewed, or extended between a nongovernmental entity and a governmental entity, the nongovernmental entity must provide the governmental entity with an affidavit signed by an

Docusign Envelope ID: AFCB16A4-B390-89EA-8013-04580053D90F

officer or a representative of the nongovernmental entity under penalty of perjury attesting that the nongovernmental entity does not use coercion for labor or services as defined in such statute;

NOW, THEREFORE, in consideration of the covenants set forth herein, the parties agree to this addendum as follows:

1. Amendment. This Addendum hereby amends and supplements the terms of the Agreement. In the event of a conflict between the terms of the Agreement and terms of the Addendum, the terms of the Addendum shall prevail.

2. Public Records Compliance. Contractor agrees that, to the extent that it may "act on behalf" of the City within the meaning of Section 119.0701(1)(a), Florida Statutes in providing its services under this Agreement, it shall:

(a) Keep and maintain public records required by the public agency to perform the service.

(b) Upon request from the public agency's custodian of public records, provide the public agency with a copy of the requested records or allow the records to be inspected or copied within a reasonable time at a cost that does not exceed the cost provided in this chapter or as otherwise provided by law.

(c) Ensure that public records that are exempt or confidential and exempt from public records disclosure requirements are not disclosed except as authorized by law for the duration of the contract term and following completion of the contract if the contractor does not transfer the records to the public agency.

(d) Upon completion of the contract, transfer, at no cost, to the public agency all public records in possession of the contractor or keep and maintain public records required by the public agency to perform the service. If the contractor transfers all public records to the public agency upon completion of the contract, the contractor shall destroy any duplicate public records that are exempt or confidential and exempt from public records disclosure requirements. If the contractor keeps and maintains public records upon completion of the contract, the contractor shall meet all applicable requirements for retaining public records. All records stored electronically must be provided to the public agency, upon request from the City's custodian of public records, in a format that is compatible with the information technology systems of the City.

(e) Pursuant to Section 119.0701(2)(a), Fla. Stat., **IF THE CONTRACTOR HAS QUESTIONS REGARDING THE APPLICATION OF CHAPTER 119, FLORIDA STATUTES, TO THE CONTRACTOR'S DUTY TO PROVIDE PUBLIC RECORDS RELATING TO THIS AGREEMENT, CONTACT THE CUSTODIAN OF PUBLIC RECORDS AT:**

Renee Rose
City Clerk/Public Records Custodian
cityclerk@stpetebeach.org

Docusign Envelope ID: AFCB16A4-B390-89EA-8013-04580053D90F

Phone: 727-363-9220
155 Corey Avenue
St. Pete Beach, FL 33706
Fax: 727-541-8040

3. Public Records Compliance Indemnification. Contractor agrees to indemnify and hold the City harmless against any and all claims, damage awards, and causes of action arising from the contractor's failure to comply with the public records disclosure requirements of Section 119.07(1), Florida Statutes, or by contractor's failure to maintain public records that are exempt or confidential and exempt from the public records disclosure requirements, including, but not limited to, any third party claims or awards for attorneys' fees and costs arising therefrom. Contractor authorizes the public agency to seek declaratory, injunctive, or other appropriate relief against Contractor in Pinellas County Circuit Court on an expedited basis to enforce the requirements of this section.

4. Compliance/Consistency with Section 768.28, Fla. Stat. Any indemnification or agreement to defend or hold harmless by City specified in the Agreement shall not be construed as a waiver of City's sovereign immunity, and shall be limited to such indemnification and liability limits consistent with the requirements of Section 768.28, Fla. Stat. and subject to the procedural requirements set forth therein. Any other purported indemnification by City in the Agreement in derogation hereof shall be void and of no force or effect.

5. Non-appropriation. City's performance and obligation to pay under this Agreement is contingent upon an appropriation during the City's annual budget approval process. If funds are not appropriated for a fiscal year, then the Contractor shall be notified as soon as is practical by memorandum from the City Manager or designee that funds have not been appropriated for continuation of the Agreement, and the Agreement shall expire at the end of the fiscal year for which funding has been appropriated. The termination of the Agreement at fiscal year end shall be without penalty or expense to the City subject to the City paying all invoices for services rendered during the period the Agreement was funded by appropriations.

6. E-Verify Compliance. By entering into this Agreement, the Contractor is obligated to comply with the provisions of Section 448.095, Fla. Stat. "Employment Eligibility," as amended from time to time. This includes but is not limited to register with and use the E-Verify System to verify the work authorization status of all newly hired employees, and requiring all subcontractors to provide an affidavit to Contractor attesting that the subcontractor does not employ, contract with, or subcontract with, an unauthorized alien. Contractor agrees to maintain a copy of such affidavit for the duration of this Agreement. Failure to comply with this paragraph will result in the termination of this Agreement as provided in Section 448.095, Fla. Stat., as amended and Contractor will not be awarded a public contract for at least one (1) year after the date on which the Agreement was terminated. Contractor will also be liable for any additional costs to the City as a result of the termination of this Agreement in accordance with this paragraph. Contractor affirmatively states, under penalty of perjury, that in accordance with Section 448.095, Fla. Stat., Contractor is registered with and uses the E-Verify system to verify the work authorization status of all newly hired employees, that in accordance with such statute, Contractor requires from each of its subcontractors an affidavit stating that the subcontractor does not employ, contract with, or

Docusign Envelope ID: AFCB16A4-B390-89EA-8013-04580053D90F

subcontract with an unauthorized alien, and that Contractor is otherwise in compliance with Sections 448.09 and 448.095, Fla. Stat.

7. Compliance/Consistency with Scrutinized Companies Provisions of Florida Statutes. Section 287.135(2)(a), Fla. Stat., prohibits a company from bidding on, submitting a proposal for, or entering into or renewing a contract for goods or services of any amount if, at the time of contracting or renewal, the company is on the Scrutinized Companies that Boycott Israel List, created pursuant to Section 215.4725, Fla. Stat., or is engaged in a boycott of Israel. Section 287.135(2)(b), Fla. Stat., further prohibits a company from bidding on, submitting a proposal for, or entering into or renewing a contract for goods or services over one million dollars ($1,000,000) if, at the time of contracting or renewal, the company is on either the Scrutinized Companies with Activities in Sudan List or the Scrutinized Companies with Activities in the Iran Petroleum Energy Sector List, both created pursuant to section 215.473, Fla. Stat., or the company is engaged in business operations in Cuba or Syria. Contractor hereby certifies that Contractor is not listed on any of the following: (i) the Scrutinized Companies that Boycott Israel List, (ii) Scrutinized Companies with Activities in Sudan List, or (iii) the Scrutinized Companies with Activities in the Iran Petroleum Energy Sector List. Contractor further hereby certifies that Contractor is not engaged in a boycott of Israel or engaged in business operations in Cuba or Syria. Contractor understands that pursuant to section 287.135, Fla. Stat., the submission of a false certification may subject Contractor to civil penalties, attorney's fees, and/or costs. Contractor further understands that any contract with City for goods or services of any amount may be terminated at the option of City if Contractor (i) is found to have submitted a false certification, (ii) has been placed on the Scrutinized Companies that Boycott Israel List, or (iii) is engaged in a boycott of Israel. And, in addition to the foregoing, if the amount of the contract is one million dollars ($1,000,000) or more, the contract may be terminated at the option of City if the company is found to have submitted a false certification, has been placed on the Scrutinized Companies with Activities in Sudan List or the Scrutinized Companies with Activities in the Iran Petroleum Energy Sector List, or has been engaged in business operations in Cuba or Syria.

8. Disclosure Requirements for "Foreign Countries of Concern". CONTRACTOR shall comply with the disclosure requirements set forth is Section 286.101 (3) (a), Fla. Stat., which requires "Any entity that applies to a state agency or political subdivision for a grant or proposes having a contract value of $100,000 or more shall disclose to the state agency or political subdivision any current or prior interest of, any contract with, or any grant or gift received from a "foreign country of concern" if such interest, contract, grant or gift received from a "foreign country of concern" if such interest, contract, grant or gift has a value of $50,000 or more and such interest existed at any time or such contract, grant or gift was received or in force at any time during the previous five (5) years. Such disclosure shall contain the name and mailing address of the disclosing entity, the amount of the gift or the value of the interest disclosed, the applicable "foreign country of concern" and, if applicable the date of termination of the contract or interest, the date of receipt of the grant or gift and the name of the agent or controlled entity that is the source or interest holder. Within one (1) year before applying for any grant or proposing any contract, such entity must provide a copy of such disclosure to the Department of Financial Services". Pursuant to Section 286.101(7), Fla. Stat.: "In addition to any fine assessed under [section 286.101(7)(a), F.S.], a final order determining a third or subsequent violation by an entity other than a state agency or political subdivision shall automatically disqualify the entity from

Docusign Envelope ID: AFCB16A4-B390-89EA-8013-04580053D90F

eligibility for any grant or contract funded by a state agency or any political subdivision until such ineligibility is lifted by the Administration Commission for good cause."

9. Venue and Jurisdiction. Notwithstanding any of other provision to the contrary, this Agreement and the parties' actions under this Agreement shall be governed by and construed under the laws of the State of Florida, without reference to conflict of law principles. As a material condition of this Agreement, each Party hereby irrevocably and unconditionally: i) consents to submit and does submit to the jurisdiction of the Circuit Court in and for Pinellas County, Florida for any actions, suits or proceedings arising out of or relating to this Agreement. Both parties waive any right to file an action, suit or proceeding in Federal Court or remove any action, suit or proceeding to Federal Court.

10. Attorneys' Fees and Costs. Notwithstanding any of other provision to the contrary, if litigation ensues regarding this Agreement, each party hereto shall bear its own attorneys' fee and costs.

11. Public Entities Crime or Convicted Vendor List. Contractor agrees and assumes a continuous duty to disclose to the City if the Contractor or any of its affiliates as defined by Section 287.133(1)(a), Florida Statutes are placed on the Convicted Vendor List or the Antitrust Violator Vendor List maintained by the Florida Department of Management Services.

12. Data Management; Notice of Breach. Contractor shall cooperate with the City and provide timely incident reporting, response activities/fact gathering, public and agency notification, severity level assessment, after-action reports, etc., which the City must report in accordance with Sections 282.3185(5) & (6), Florida Statutes in the event of a data breach.

13. Environmental and Social Government and Corporate Activism. The City has not given preference or requested documentation from the Contractor based on Contractor's social, political or ideological interest. Contractor agrees to similarly not request documentation or give preference to any subcontractor based on the subcontractor's social, political or ideological interests.

14. Taxes. The City shall not be liable for any taxes and assessments imposed by a federal, state or local governmental agency to the extent that the City is exempt from same by Florida law, including but not limited to any sales or use tax.

15. No coercion for labor or services. The Contractor swears under penalty of perjury that the Contractor does not use coercion for labor or services as defined as follows:

"Coercion" means:

1. Using or threatening to use physical force against any person;
2. Restraining, isolating, or confining or threatening to restrain, isolate, or confine any person without lawful authority and against her or his will;
3. Using lending or other credit methods to establish a debt by any person when labor or services are pledged as a security for the debt, if the value of the labor or services as reasonably assessed is not applied toward the liquidation of the debt, the length and nature of the labor or services are not respectively limited and defined;

Docusign Envelope ID: AFCB16A4-B390-89EA-8013-04580053D90F

4. Destroying, concealing, removing, confiscating, withholding, or possessing any actual or purported passport, visa, or other immigration document, or any other actual or purported government identification document, of any person;

5. Causing or threatening to cause financial harm to any person;

6. Enticing or luring any person by fraud or deceit; or

7. Providing a controlled substance as outlined in Schedule I or Schedule II of Sec. 893.03, Fla. Stat. to any person for the purpose of exploitation of that person.

16. Force Majeure. The City reserves the right to suspend, modify or terminate this contract in the event of an act of god or act of man beyond the control of the parties, including but not limited to a hurricane, tropical storm, tornado, or other destructive weather event, flooding, pandemic, plague, war, armed conflict, domestic or foreign terrorism, riot, labor condition, state or federal governmental action, and catastrophic Internet disturbance, making performance inadvisable, economically impracticable, illegal, or impossible.

17. Additional Terms. Notwithstanding any of other provision to the contrary, the parties agree as follows:

A. None.

IN WITNESS WHEREOF, the parties hereto have executed and delivered this instrument on the days and year indicated below and the signatories below to bind the parties set forth herein.

Under penalties of perjury, and pursuant to Sec. 92.525, Fla. Stat., Contractor declares that Contractor has read the foregoing Section 15 above and that the facts stated in it are true.

Contractor:

Tim Bussen

Print Name: Tim Bussen

Title: Vice President

Company: SAK Construction

ATTEST:

Renee Rose, City Clerk

City of St. Pete Beach:

Frances Robustelli, City Manager

Docusign Envelope ID: AFCB16A4-B390-89EA-8013-04580053D90F

EXHIBIT “B”

Request for Bid/Proposal

(Place Request for Bid/Proposal behind this page)

Docusign Envelope ID: AFCB16A4-B390-89EA-8013-04580053D90F

City of St Pete Beach
Request for Proposal

Wastewater System Rehabilitation Services

Timeline	Date	Time
Publication of Bid	03/11/2026	8:00 AM
Pre-Bid Meeting	03/18/2026	11:00 AM
Deadline for Question Submission	03/25/2026	10:00 AM
Submittal Deadline electronically via Bonfire	04/08/2026	9:00 AM
Submittal Opening	04/08/2026	10:00 AM

Submittals are due on or before
04/08/2026 at 9:00 AM EST
Electronically Via Bonfire Only

Docusign Envelope ID: AFCB16A4-B390-89EA-8013-04580053D90F

TABLE OF CONTENTS

I. INVITATION 3
II. STATEMENT OF WORK AND TECHNICAL SPECIFICATIONS 4
III. BID FORM 5
IV. GENERAL CONTRACT TERMS 6
V. REFERENCES & MINIMUM QUALIFICATIONS 17
VI. CONTRACTOR'S PROPOSAL SUBMITTAL 18
VII. PUBLIC ENTITY CRIMINAL AFFIDAVIT 19
VIII. NON-COLLUSION AFFADAVIT 21

Docusign Envelope ID: AFCB16A4-B390-89EA-8013-04580053D90F

I. INVITATION

The City of St Pete Beach has issued this Request for Proposal (RFP) to solicit competitive bids and proposals from Proposers for Wastewater System Rehabilitation Services, including manhole rehabilitation, pipe lining and point repairs.

The proposed work will be located within the City of St. Pete Beach in Pinellas County, FL, throughout the entire wastewater collection and transmission system. Each asset to be rehabilitated and the type of rehabilitation required will be identified in each individual Work Order with the location shown on corresponding geographical exhibits.

The successful proposer shall furnish all labor, superintendence, materials, power, light, heat, fuel, water, tools, appliances, equipment, supplies, shop drawings, working drawings and other means of construction necessary or proper for performing and completing the work. The Contractor is responsible for obtaining all required permits necessary for the work, including all applications and review fees, other than those permits which may have already been obtained. The Contractor shall perform and complete the work in a speedy and efficient manner consistent with safety of life and property and to the city's satisfaction, and in strict accordance with the Contract Documents. The Contractor shall repair or restore all structures and property damaged or disturbed during performance of the work.

The types of projects include:

- **Wastewater System Manhole Rehabilitation (Manhole Project):**
  The Contractor shall furnish all labor, material, equipment, and services necessary for manhole rehabilitation. The work shall be completed at various locations through the City's wastewater service area and shall include, but is not limited to, maintenance of traffic, temporary by-pass pumping and/or diversion of wastewater, cleaning, removal and disposal of all sand, rubble, deposits, and other accumulated debris, re-building manhole bench and channels, ring (frame) and cover adjustment and replacement, pavement restoration, inflow/infiltration elimination, surface preparation, cementitious and polymer coatings installation, internal chimney sealing, manhole cover insert installation, testing, project site cleanup and restoration, and all other incidentals as required and directed by the Engineer to complete the work.
- **Wastewater System Pipe Lining (Lining Project):**
  The Contractor shall furnish all labor, material, equipment, and services necessary for wastewater pipe rehabilitation using Cured-In-Place-Pipe (CIPP) lining. The work shall be completed at various locations through the City's wastewater service area and shall include, but is not limited to, maintenance of traffic, temporary by-pass pumping and/or diversion of wastewater, cleaning, removal and disposal of all sand, rubble, deposits, and other accumulated debris, CIPP liner installation, reconnection of service laterals, testing of CIPP liners, project site cleanup and restoration, and all other incidentals as required and directed by the Engineer to complete the work.
- **Wastewater System Point Repairs (Point Repair Project):**
  The Contractor shall furnish all labor, material, equipment, and services necessary for wastewater point repairs. The work shall be completed at various locations throughout the City's wastewater service area and shall include, but is not limited to, maintenance of traffic, temporary by-pass pumping and/or diversion of wastewater, dewatering, directional drilling, jack and boring, remove unsuitable materials below trench grade, sanitary sewer gravity and force main installation, force main and gravity main connections, remove out of service gravity and force mains, install manhole connections, grout out of service pipe, install valves and associated appurtenances, project site cleanup and restoration, and all other incidentals as required and directed by the Engineer to complete the work.

CONTACT INFORMATION
Procurement Manager – Sara Spain
Email – purchasing@stpetebeach.org

Docusign Envelope ID: AFCB16A4-B390-89EA-8013-04580053D90F

II. STATEMENT OF WORK AND TECHNICAL SPECIFICATIONS

See attached Technical Specifications Word document.

Docusign Envelope ID: AFCB16A4-B390-89EA-8013-04580053D90F

III. BID FORM

See attached Bid Form Excel document.

Docusign Envelope ID: AFCB16A4-B390-89EA-8013-04580053D90F

IV. GENERAL CONTRACT TERMS

REQUEST FOR PROPOSALS
Wastewater System Rehabilitation Services

REQUEST FOR PROPOSAL SUMMARY
The City of St Pete Beach has issued this Request for Proposal (RFP) to solicit competitive bids and proposals from Proposers for Wastewater System Rehabilitation Services, including manhole rehabilitation, pipe lining and point repairs.

The successful bidder shall provide all labor, materials, equipment, tools, consumables, transportation, and incidentals to provide Public Services capital improvement projects construction services on an 'as needed' basis for the City of St Pete Beach.

The "City" intends to **award multiple contracts** to vendors who can provide the best value for services. Vendors may submit proposals for all, some, or only one of the categories. **It is not mandatory to submit a proposal for every item listed**. A bidder may bid on any, all, or none of the items. The "City" reserves the right to select multiple vendors to optimize cost-efficiency and capability across different segments of the project. Proposals will be evaluated based on capability, cost, and capacity to perform the specific line items requested.

PROPOSAL SUBMITTALS
Proposal documents must include a signed/notarized Contractor's Proposal Submittal, Bid Form, References, Contractor's license and insurance certificates, and Public Entity Criminal Affidavit. The Contractor shall submit electronic proposals only. Bidders must submit electronically only through Bonfire platform. When bidding electronically, only one copy should be submitted.

Proposals shall include the following:

- A signed and notarized Proposer's Contract Proposal.
- Current proof of insurance certificate.
- A list of references and minimum qualifications as outlined in Section V.
- One copy of bid electronically submitted to Bonfire platform.

The City is not responsible for any Addendums or other supplementary information that is not received due to non-submittal of the aforementioned information. Please refer back to the city website (http://www.stpetebeach.org/news-and-links/city-projects.html) for additional project information as it becomes available. The City reserves the right to decide whether to answer addendums or not. The City is not required to provide any additional information.

Proposers or persons wishing to submit a proposal on this project shall be licensed, and insured in accordance with the City's requirements

The City of St. Pete Beach reserves the right to reject any or all proposals or parts of proposals, or accept any proposal or part thereof deemed to be in the best interests to the City of St. Pete Beach.

Electronic proposals must be submitted by **9:00 AM on April 08, 2026 (Deadline),** clearly marked as: **"Wastewater System Rehabilitation Services."**

PRE-PROPOSAL MEETING
An optional pre-proposal meeting will be held on **March 18, 2026 at 11:00 AM EST** via Microsoft Teams conference/Teleconference. Please contact the City's Procurement Manager (purchasing@stpetebeach.org) for a meeting invitation and instructions.

Docusign Envelope ID: AFCB16A4-B390-89EA-8013-04580053D90F

WRITTEN REQUESTS FOR INTERPRETATIONS/CLARIFICATIONS
No oral interpretations will be made to any firms as to the meaning of the scope of work or any other contract documents included in this **RFP.** All questions pertaining to the terms and conditions or scope of work of this Request for Proposal **(RFP)** must be sent in writing via email only to the City Procurement Manager (purchasing@stpetebeach.org) and shall be received no later than **10:00 AM EST on March 25, 2026.** Responses to questions may be handled as an Addendum if the response would provide clarification to the requirements of the **RFP**. All such Addenda shall become a part of the contract documents. The City will not be responsible for any other explanation or interpretation of the proposed **RFP** made or given prior to the award of the contract. The City will not respond to questions received after the specified deadline. The City reserves the right to respond to any and all questions but is not required to do so. If the Proposer discovered the opportunity through the online platform (Bonfire), do not submit questions through these platforms. **Only questions emailed directly to the City Procurement Manager will be answered.**

BEGINNING DATE
The Proposer shall, within ten (10) business days after receipt of the Notice of Award and before commencement of any operations hereunder, execute the Agreement. Additionally, the Proposer shall, within twenty (20) business days after receipt of the Notice of Award, provide all required documentation to the City.

COMPLETION OF WORK
The work will be completed on an as-needed basis. Each location that needs to be surveyed, repaired and/or worked on will constitute it's own "job". This will be a three (3) year initial contract with the option to be extended for two (2) additional one (1) year periods upon mutual consent of both parties. It is the intent of the City of St Pete Beach to award these services to more than one Contractor/Vendor.

COSTS INCURRED BY PROPOSERS
All expenses involved with the preparation and submission of proposals to the City, or any work performed in connection therewith, shall be borne solely by the Proposers. No payment will be made for any responses received or for any other effort required of or made by; the Proposer's prior to contract commencement.

ORAL PRESENTATION
The City may require an oral presentation of the proposal at the Evaluation Committee's discretion. This could also include a formal interview of any and all members of the Proposer's contract management staff.

CONFLICT OF INTEREST
The Proposer represents that it presently has no interest and shall acquire no interest, either direct or indirect, which would conflict in any manner with the performance or services required hereunder, as provided for in FL Stat. 112.311. The Proposer further represents that no person having any interest shall be employed for said performance.

The Proposer shall promptly notify the City's representative, in writing, by certified mail, of all potential conflicts of interest for any prospective business association, interest, or other circumstance, which may influence or appear to influence the contractor's judgment or quality of services being provided hereunder. Such written notification shall identify the prospective business association, interest or circumstance, the nature of work that the Proposer may undertake and request an opinion of the city as to whether the association, interest or circumstance would, in the opinion of the City, constitute a conflict of interest if entered into by the Proposer. The City agrees to notify the Proposer of its opinion by certified mail within thirty days of receipt of notification by the Proposer.

LATE PROPOSAL OR MODIFICATIONS
Modifications in writing received prior to the time set for the proposal submittal will be accepted. Proposal modifications received after the time set for the proposal submittal will not be considered.

Docusign Envelope ID: AFCB16A4-B390-89EA-8013-04580053D90F

RELATED PARTIES AND MULTIPLE PROPOSALS
Where two (2) or more related parties each submit a proposal or multiple proposals are received from (1) Proposer, for any such contract, such proposals shall be judged non-responsive. Related parties mean Proposers or the principles thereof, which have a direct or indirect ownership interest in another Proposer for the same contract or in which a parent company or the principles thereof where one (1) Proposer has a direct ownership interest in another Proposer for the same contract.

RIGHT TO AUDIT
The City of St. Pete Beach reserves the privilege of auditing a Proposer's record as such records relate to purchases or work between the City and said Proposer. Records should be maintained for three years from contract date.

VARIANCE FROM STANDARD TERMS & CONDITIONS
All standard terms and conditions stated throughout the RFP apply to this contract except as specifically stated. This should be fully understood by Proposers prior to submitting a proposal.

ASSIGNMENT
The Proposer shall perform this contract. No assignment or subcontracting shall be allowed without prior written consent of the City. If a Proposer intends to subcontract a portion of this work, the Proposer must disclose that intent in the proposal. In the event of a corporate acquisition and/or merger, the Contractor shall provide written notice to the City within thirty (30) business days of Proposer's notice of such action or upon the occurrence of said action, whichever occurs first. The right to terminate this contract, which shall not be unreasonably exercised by the City shall include but not be limited to, instances in which a corporate acquisition and/or merger represent a conflict of interest or are contrary to any local, state, or federal laws. Action by the City awarding a proposal to a firm that has disclosed its intent to assign or subcontract in its response to the RFP, without exception shall constitute approval for purpose of this Agreement.

LOBBYING Lobbying of Evaluation Committee members, City employees, or elected officials regarding request for proposals, request for qualifications, bids or contracts, during the pendency of bid award or bid protest, by the bidder/proposer/protestor or any member of the bidder's/proposer's/protestor's staff, an agent of the bidder/proposer/protestor, or any person employed by any legal entity affiliated with representing an organization that is responding to the request for proposal, request for qualification, bid or contract, or has a pending bid protest is strictly prohibited either upon advertisement or on a date established by the City and shall be prohibited until either an award is final or the protest is finally resolved by the City Manager or Procurement Manager; provided, however, nothing herein shall prohibit a prospective bidder/proposer from contacting City departments to address situations such as clarification and/or questions related to the procurement process. For purposes of this provision, lobbying activities shall include but not be limited to, influencing or attempting to influence action or non-action in connection with any requests for proposal, request for qualification, bid or contract through direct or indirect oral or written communication or an attempt to obtain goodwill of persons and/or entities specified in this provision. Such actions may cause any request for proposal, request for qualification, bid or contract to be rejected.

ADDITIONAL REQUIREMENTS
The City reserves the right, by change order, to unilaterally add or delete locations/services, either collectively or individually, at the City's sole option, at any time after award has been made as may be deemed necessary or in the best interest of the City. In such case, the Proposer will be required to provide or reduce services to this contract in accordance with the terms, conditions, and specifications.

Docusign Envelope ID: AFCB16A4-B390-89EA-8013-04580053D90F

SERVICES AGREEMENT
A written agreement incorporating the RFP and the successful proposal will be prepared by the City, signed by the successful Proposer, and presented to the City Commission for approval and signature.

INTEGRITY OF REQUEST FOR PROPOSAL DOCUMENTS
Proposers shall use the original RFP forms provided within the RFP and enter information in the spaces where a response is requested. Proposers may use an attachment as an addendum to the RFP forms if sufficient space is not available on the original form for the Proposer to enter a complete response. Any modifications or alterations to the original RFP documents by the Proposer, whether intentional or otherwise, will constitute grounds for rejection of the RFP. Any such modifications or alterations a Proposer wishes to propose must clearly be stated in the Proposer's RFP response and presented in the form of an addendum to the original RFP documents.

RESPONSIBILITY OF THE CITY MANAGER OR DESIGNEE
The term "City Manager or designee" wherever used in this Contract shall be the City of St. Pete Beach or its duly authorized representative. Notices of any change in the City Manager or designee shall be given in writing by the City to the Contractor. The City Manager or designee shall have full authority to interpret the contract and requirements and shall determine acceptance of the work under this Contract and every question relative to the fulfillment of the terms and provisions therein. It shall be the duty of the City Manager or designee to enforce the contract terms in a fair and unbiased manner.
If a variation from any requirements is allowed, the City Manager or designee shall grant the same in writing with the reasons for his action outlined, and such action will not invalidate or change the Contract in any other manner.

EXAMINATION OF SITE
Proposer shall carefully examine project site and be familiar with the work required for the project, investigate all site conditions that may affect execution of work as detailed in the construction documents. Contact the City's Procurement Manager or their designee for changes or alterations before proceeding.

ASSURANCES
The responding Proposer shall provide a statement of assurance that the Proposer is not presently in violation of any statutes or regulatory rules that might have an impact on the firm's operations. All applicable laws and regulations of the State of Florida, and ordinances and regulations of the City of St. Pete Beach will apply.

ASSIGNMENT AND TRANSFER OF CONTRACT
The Proposer shall not assign or transfer this Agreement or any part thereof or any interest therein without consent in writing of the City and the Proposer's Surety, and any such assignment or transfer without such written consent shall be null and void.

SUBCONTRACTS
The Proposer shall not subcontract this Agreement or any part thereof or any interest therein without consent in writing of the City and the Proposer's Surety. Any Subcontractor approved by the City will be subject to the same standards and qualifications as stated in this Contract.

PAYMENT
Payment shall be made to the Proposer for work performed under this Contract for the quantities of work as determined in accordance with Payments for Work Completed and Payments Withheld of this Contract. Payment for extra work will be made in accordance with the Changes in Work, Contract Amount, and Contract Time sections below.

PERIOD OF PERFORMANCE
The target completion for the base Scope of Services is January 2027, corresponding to delivery of the Design-Build Readiness Package. The City reserves the right, at its sole discretion and subject to funding

Docusign Envelope ID: AFCB16A4-B390-89EA-8013-04580053D90F

availability, to amend this Agreement to extend the Consultant's services through final (100%) design. Any additional services shall be authorized by written amendment and negotiated in accordance with the Consultants' Competitive Negotiation Act (Section 287.055, Florida Statutes).

CHANGES IN THE WORK

Without invalidating the Contract, the City may, at any time or from time to time, order additions, deletions or revisions in the work authorized by written Change Orders or directives. Upon receipt of a Change Order, the Proposer will proceed with the work involved. All such work shall be executed under the applicable conditions of the Contract documents. If any Change Order causes an increase or decrease in the Contract Amount or any extension or shortening of the Contract Time, an equitable adjustment will be made.

Additional Work performed by the Proposer without authorization of a Change Order will not entitle them to an increase in the Contract Amount or any extension of the Contract Time, except in the case of an emergency (subject to approval by City Manager or designee).

It is the Proposer's responsibility to notify their Surety of any changes affecting the general scope of the Work or change of the Contract Amount and the amount of the applicable bonds shall be adjusted accordingly, and an amended bond document furnished to the City. In the event the City directs the Proposer to make a change in the Work, and if the City and the Proposer do not arrive at a mutually acceptable increase or decrease in the Contract Amount, the Proposer shall not use any such lack of mutual acceptance as a basis or cause to stop or otherwise delay the progress or the execution and completion of any of the work ordered, directed or required pursuant to the Contract Documents.

If the Proposer believes an event or situation has occurred which justifies a change in the Contract Amount or Contract Time, they shall deliver a written notice to the City Manager or designee. Each such written notice shall be delivered promptly and no later than fifteen (15) business days after the Proposer first discovered the occurrence. The Proposer shall be deemed to have waived the right to collect any and all costs incurred more than fifteen (15) business days prior to the date of delivery of the written notice and shall be deemed to have waived the right to seek an extension of the Contract Time with respect to any delay in the Progress Schedule which accrued more than fifteen (15) business days prior to the date of delivery of the written notice.

Any such notice shall include sufficient detail to explain the basis of entitlement to a claim for an adjustment to the Contract Amount of Contract Time. When requested by the City Manager or designee, the Proposer shall furnish any additional information and details as may be required to determine the facts or allegations involved, which shall be provided within fifteen (15) business days of the request unless a longer time period is allowed by the City Manager or designee.

The Proposer shall prepare proposals detailing proposed adjustments to Contract Amount and/or Contract Time and submit them to the City Manager or designee within fifteen (15) business days of the City's issuance of a proposed Change Order or the Proposer's submitting a written notice of a change or claim for an adjustment to the Contract Amount or Contract Time. Proposer's proposals shall be irrevocable for a period of at least sixty (60) business days after receipt by the City. Any delay in the submittal of a complete, adequate and acceptable proposal will not justify an increase in Contract Amount or Contract Time. Proposer agrees that it shall give the City access to any and all of Proposer's and Subcontractors' books, records and other materials relating to proposed Change Orders and other claims for adjustment to Contract Amount or Contract Time.

CHANGE OF CONTRACT AMOUNT

The Contract Amount constitutes the total compensation payable to the Proposer for performing the Work. All duties, responsibilities and obligations assigned to or undertaken by the Proposer shall be at his expense

Docusign Envelope ID: AFCB16A4-B390-89EA-8013-04580053D90F

without change in the Contract Amount. The Contract Amount may only be changed by written Change Order issued by the City. Any claim for an increase in the Contract Amount shall be in writing and delivered to the City Manager or designee within fifteen (15) business days of the occurrence of the event giving rise to the claim.

All claims for adjustment in the Contract Amount shall be determined by the City Manager or designee. However, no claim for an adjustment to the Contract Amount will be considered for unforeseeable causes that were beyond the fault or negligence of the Proposer or his Subcontractors or supplier such as acts of God, floods, riots, etc. This restriction does not restrict submission of claims for additional Contract Time due to events of this nature. Any change in the Contract Amount shall be incorporated in a Change Order.

Proposer proposals or claims shall cover all aspects of the Work involved and shall be fully documented and itemized as to all costs, quantities and charges for overhead and profit. Amounts for Subcontractors or Suppliers at any tier shall be similarly supported. When determining Subcontractors' costs, the methods to be used shall be those used for the Proposer's costs, except that the term "Subcontractor" shall replace the term "Proposer," context permitting.

The value of any Work covered by a Change Order or of any claim for an increase or decrease in the Contract Amount where the Work involved is covered by unit prices contained in the Contract Documents shall be determined by application of unit prices to the quantities of the items involved. If the quantities originally contemplated are so changed in a proposed Change Order, that application of the Unit Prices to the quantities proposed will cause substantial inequity to the City or the Proposer, the applicable unit price(s) shall be equitably adjusted by mutual agreement.

If the value of work covered by a Change Order cannot be established or mutually agreed to utilizing previously established unit rates, the value shall be determined by the City on the basis of an estimate of the out-of-pocket cost and percentages that are acceptable to the City for overhead and profit.

In such case, the Proposer will submit in the form prescribed by the City an itemized cost breakdown together with supporting data.

The amount of credit to be allowed by the Proposer to the City for any such change which results in a net decrease in cost, will be the amount of the actual net decrease as determined by the City. When both additions and credits are involved in any one change, the combined overhead and profit shall be figured on the basis of the net increase, if any.

CHANGE OF CONTRACT TIME

The Contract Time may only be changed by written Change Order. Any claim for an extension in the Contract Time shall be in writing and include an analysis of the Progress Schedule as further described in the Specifications and shall be delivered to the City Manager or designee within fifteen (15) business days of the occurrence of the event giving rise to the claim. All claims for adjustment in the Contract Time shall be determined by the City Manager or designee. Any change in the Contract Time resulting from any such claim shall be incorporated in a Change Order. The Contract Time may be extended for an amount equal to time lost due to unforeseeable causes beyond the control of the Proposer (and his Subcontractors and Suppliers) if he makes a claim therefrom. Such delays shall include, but not be restricted to, acts or neglect by any separate Proposer employed by the City; fires; floods; labor disputes; epidemics; or acts of God.

All time limits stated in the Contract Documents are of the essence to the Contract. The stated time limits are agreed to be adequate to complete the work, including the procurement, manufacture and delivery of all material and equipment required, and account for any and all potential impact, delays, disruptions and costs that may be expected.

Docusign Envelope ID: AFCB16A4-B390-89EA-8013-04580053D90F

PAYMENTS FOR WORK COMPLETED
All payments under this agreement shall comply with the requirements of Florida Statutes, Section 215.422, commonly referred to as the "Prompt Payment Law." This includes timely processing of invoices and adherence to statutory interest provisions for late payments. The Contractor shall submit detailed invoices for services rendered under this agreement. Each invoice must include: Purchase Order or Contract Number, Description of services provided, Dates of service, Total amount due. Payment will be made within 45 days of receipt of a proper invoice and acceptance of deliverables, as required by Florida law. If payment is not made within the statutory timeframe, interest penalties will apply in accordance with Section 215.422, Florida Statutes. Payments will be issued via electronic funds transfer (EFT) unless otherwise agreed in writing. Contractor must provide accurate banking information to facilitate EFT.

PAYMENTS WITHHELD
The City Manager or designee may withhold, or, on account of subsequently discovered evidence, nullify the whole or part of any estimate to such extent as may be necessary to protect the City from loss on account of:

a) Defective work not remedied

b) Claims and/or liens filed or reasonable evidence indicating probable filing of claims

c) Failure of the Proposer to make payments properly to Subcontractors or for labor

d) A reasonable doubt that the Contract can be completed for the balance then unpaid

e) Damage to another Proposer

f) Failure of the Proposer to keep their work progressing in accordance with their time schedule

FINAL PAYMENTS
Upon the completion and acceptance of the work, the City Manager or designee shall issue a certificate that designates that the whole work provided for in this Contract has been completed and accepted by him under the conditions and the terms thereof and shall make the final estimate of the work. After issuance of the certificate, the entire balance found to be due the Proposer, including said retained percentage by the City in accordance with existing state laws as may be retained lawfully by said City, shall pay excepting such sums to the Proposer.

Before the approval of the final payment, the Proposer shall submit evidence satisfactory to the City that states that all payrolls, materials, bills and outstanding indebtedness in connection with this Contract have been paid.

LIENS
If at any time there shall be evidence of any lien or claim for which the City might become liable and which is chargeable to the Proposer, the City shall have the right to retain out of any payment then due or thereafter to become due, an amount sufficient for complete indemnification against such lien or claim. In the event the City has already paid to the Proposer all sums due under this contract or the balance remaining unpaid is insufficient to protect the City, the Proposer and his Surety shall be liable to the City for any loss so sustained.

RESPONSIBILITY OF THE CITY MANAGER OR DESIGNEE
The term "City Manager or designee" wherever used in the Contract shall be the City of St. Pete Beach or its duly authorized representative. Notices of any change in the City Manager or designee shall be given in writing by the City to the Proposer. The City Manager or designee shall have full authority to interpret the Plans and Specifications and shall determine the amount, quality, and acceptance of the work and supplies

Docusign Envelope ID: AFCB16A4-B390-89EA-8013-04580053D90F

to be paid for under the Contract and every question relative to the fulfillment of the terms and provisions therein. It shall be the duty of the City Manager or designee to enforce the Plans and Specifications in a fair and unbiased manner. If a variation from any requirements is allowed the City Manager or designee shall grant the same in writing with the reasons for his action outlined, and such action will not invalidate or change the Contract in any other manner.

LICENSES AND PERMITS

The Proposer shall obtain and pay for all necessary City licenses and work permits and shall faithfully comply with all laws, ordinances and regulations, (Federal, State or local) which may be applicable to the operations to be conducted hereunder, except for those permits obtained by the City. Notwithstanding the provisions above, the Proposer is responsible for non-compliance of all permit requirements, including all fines resulting from Proposer's non-compliance of said requirements.

Chapter II, Section II-4, "Registration of Licenses Obtained From Other Municipalities:" "Persons, partnerships, corporations, or other business entities doing business with the City who are not required to obtain a City occupational license, but who must have either a State or County or Municipal occupational license from another municipality, shall register such occupational license with St. Pete Beach Community Development Department. The City may charge a fee for such registration." The Proposer shall be responsible for obtaining all City, County, State and Federal permits required by those government agencies and must provide documentation of receipt of those permits prior to project commencement. This shall include a notice to commence work letter and the applicable fee, if required. Any sub-contractor hired by the Proposer awarded the project, MUST also register their license with the City.

LABOR PROVISIONS

The Proposer and his Subcontractors shall discharge, whenever ordered to do so by the City Manager or designee, any employee who is disorderly or whose conduct in the opinion of the City Manager or designee is detrimental to the prosecution of the work. No person whose age or physical condition is such as to make this employment dangerous to his/her health and safety or to the health and safety of others shall be employed on the work, and in no event shall any persons under the age of sixteen (16) years be employed. The State of Florida prevailing wage law requires that the Proposer shall fully comply with all provisions contained in Section 215.19, "Schedule of Prevailing Wage Rates for Specified Public Construction." The wage rates set forth by such determination shall apply to this project.

INSURANCE

The Proposer shall procure and maintain at his/her own expense, during the life of the Contract, liability insurance as hereinafter specified. All such insurance shall be subject to the approval of the City for adequacy of protection and shall include a provision preventing cancellation without twenty (20) business days prior notice to the City in writing. The City shall be included as an additional insured on all liability insurance. The liability insurance required is as follows: Proposer's General Public Liability and Property Damage Insurance issued to the Proposer and protecting the Proposer from all claims for personal injury, including death, and all claims for destruction of or damage to property, arising out of or in connection with any operations under this Contract, whether such operations be by the Proposer or by any Subcontractor hired by the Proposer or anyone directly or indirectly employed by the Proposer or hired by the Proposer.

The successful Proposer shall supply and maintain insurance which defends, indemnifies and holds harmless the City of St. Pete Beach, its officers, employees and agents from and against any and all liability, damage claims, demands, costs, judgments, fees, attorney's fees or loss arising directly out of acts or omissions hereunder by the Proposer or third party under the direction or control of the Proposer. Such general and excess liability coverage shall be primary to any other coverage carried by the City of St Pete Beach. Proposer must furnish the City with Certificate of Insurance prior to commencement of work. An

Docusign Envelope ID: AFCB16A4-B390-89EA-8013-04580053D90F

approved Certificate of Insurance furnished by the Proposer's carrier to guarantee the Proposer being insured with the City of St Pete Beach must be named as a certificate holder for this contract. The following minimum coverage:

- Professional Liability Insurance $2,000,000 each occurrence.
- Commercial General Liability Insurance $1,000,000.00.
- Comprehensive General Liability Insurance of $1,000,000.00 each occurrence.
- Personal Injury for $1,000,000.00 each occurrence.
- Automobile Liability $1,000,000.00.
- General Workers Compensation Insurance as required by Florida law.
- Longshore Harbor Workers Compensation Insurance

PROTECTION OF WORK AND PROPERTY
The Proposer shall continuously maintain adequate protection of all their work and materials from damage or theft and shall protect the City's property and all adjacent property from injury or loss arising in connection with activities under their Contract. The Proposer shall make good any such damage, injury, or loss, except such as may be caused by agents or employees of the City.

The Proposer shall take, use, provide, and maintain all necessary precautions, safeguards, and protection to prevent accidents, or injury to persons or property on, about, or adjacent to the site of the work. Should the situation arise that physical security is needed the Proposer will provide security on off days and holidays. The Proposer shall be responsible for all charges incurred with such action.

The Proposer shall post danger signs warning against any hazards created by the work being done under their Contract. They shall designate a responsible member of their organization on the work, whose duty shall be the prevention of accidents, and the name of the person so designated shall be reported to the City Manager or designee and City in writing. In an emergency affecting the safety of life, or of the work or adjoining property, the Proposer, without special instruction or authorization from the City Manager or designee, or City, is hereby permitted to act, at their own discretion, to prevent such threatened loss or injury, and they must take such action if so instructed or authorized by the City Manager or designee. The Proposer shall also protect adjacent property as required by law.

PROPOSAL REVIEW AND CONTRACT AWARD
Failure to submit all documents requested at the time of proposal may deem the Proposer's proposal ineligible for award. The City of St. Pete Beach reserves the right to reject any or all proposals or parts of proposals. The contract shall be awarded by written notice to the responsible and responsive Contractor whose proposal is determined in writing to be the most advantageous to the City, taking into consideration the price and other criteria set forth in this request for proposals. The City may waive any informality.

LOCAL, STATE AND FEDERAL COMPLAINCE REQUIREMENTS
The laws of the State of Florida do apply to any purchase made under this Request for Proposal. Proposers shall comply with all local, state, and federal directives, orders and laws as applicable to their proposal and subsequent contracts include but not limited to Equal Employment Opportunity, Minority Business Enterprise, and OSHA as applicable to this contract.

Compliance with Fla. Stat. 448.095:

- Proposer agrees to comply with all applicable portions of Fla. Stat. 448.095. Proposer must use the

Docusign Envelope ID: AFCB16A4-B390-89EA-8013-04580053D90F

U.S. Department of Homeland Security's E-Verify System, hhtps://e-verify.uscis.gov/emp, to verify the employment eligibility of all employees hired on or after January 1, 2021 during the term of this Agreement.

- Subcontractors (i) Proposer shall also require all subcontractors performing work under this Agreement to use the E-Verify system for any employees they may hire during the term of this Agreement. (ii) Subcontractors shall provide Proposer with an affidavit stating the subcontractor does not employ, contract with, or subcontract with an unauthorized alien, as defined by Fla. Stat. 448.095 (iii) Proposer shall provide a copy of such affidavit to the City upon receipt and shall maintain a copy for the duration of the Agreement.

- Proposer must provide evidence of compliance with Fla. Stat. 448.05 by January 1, 2021. Evidence may consist of, but is not limited to, providing notice of Proposer's E-Verify number.

- Failure to comply with this provision is a material breach of the Agreement, and the City may choose to terminate the Agreement at its sole discretion. Proposer may be liable for all costs associated with the City securing the same services, inclusive, but not limited to, higher costs for the same services and proposal costs (if necessary). Any challenge to termination under this provision must be filed in the Circuit Court no later than 20 calendar days after the date of termination. If this agreement is terminated for a violation of the statute by the Proposer, the Proposer may not be awarded a public agreement for a period of 1 year after date of termination.

RESERVES THE RIGHT

The City reserves the right to accept or reject any and/or all proposals, to waive irregularities and technicalities, and to request re-submission. If only one proposal is received by the proposal date and time listed, the proposal may or may not be rejected by the City depending upon proposal review and the needs of the City.

The City reserves the right to select a firm with or without additional interviews and may decide to select any of the firms submitting proposals. The City reserves the right to award the contract to a responsible proposer submitting a responsible proposal, with a resulting negotiated agreement which is most advantageous and in the best interest of the City.

Proposers, Proposers, their agents, and associates shall not contact or solicit any City Commission member, City employee, or official regarding this RFP during any phase of the proposalding process. Failure to comply with the provision may result in disqualification of the Proposer, at the option of the City. Only that individual listed, or an approved designee, as the contact person for this RFP shall be contacted.

SUBMITTAL WITHDRAWAL

After submittals are opened, corrections or modifications to submittals are not permitted, but a responding firm may be permitted to withdraw an erroneous submittal prior to the award by the City Commission, if the following is established:

- That the responding firm acted in good faith in submitting the submittal;
- That in preparing the submittal there was an error of such magnitude that enforcement of the submittal would work severe hardship upon the respondent;
- That the error was not the result of gross negligence or willful inattention on the part of the respondent;
- That the error was discovered and communicated to the City within twenty-four (24) hours of submittal opening, along with a request for permission to withdraw the submittal; or
- The responding firm submits documentation and an explanation of how the error was made.

Docusign Envelope ID: AFCB16A4-B390-89EA-8013-04580053D90F

CONE OF SILENCE
Respondents to this solicitation or persons acting on their behalf may not contact, between the release of the solicitation and the end of the 72-hour period following the agency posting the notice of intended award, excluding Saturdays, Sundays, and state holidays, any employee or officer of the executive or legislative branch concerning any aspect of this solicitation, except in writing to the procurement officer or as provided in the solicitation documents. Violation of this provision may be grounds for rejecting a response.

TERMINATION
The resulting contract may be canceled by the City when:

- Sufficient funds are not available to continue its full and faithful performance of this contract.
- There is sub-standard or non-performance of contract.
- The City wishes to terminate at any time and for any reason, upon giving thirty (30) days prior written notice to the other party.

The resulting contract may be canceled by either party in the event of substantial failure to perform in accordance with the terms by the other party through no fault of the terminating party.

FISCAL NON-FUNDING

If funds for the requested services described herein are not appropriated via the annual budget adoption process, the City reserves the right to cancel this Agreement immediately upon written notice to the vendor.

PROJECT RECORDS
The awarded firm shall maintain auditable records concerning the procurement to account for all receipts and expenditures, and to document compliance with the Contract. These records shall be kept in accordance with generally accepted accounting methods, and the City of St. Pete Beach reserves the right to determine the record-keeping method in the event of non-conformity. These records shall be maintained for three (3) years after final payment has been made and shall be readily available to City personnel with reasonable notice, and to other persons in accordance with the Florida Public Disclosure Statutes. Additionally, the awarded firm shall abide by and comply with Florida Statutes regarding public records. Specifically, the firm shall be aware of the provisions found in Section 119.0701, Florida Statutes.

Upon completion of the project, all reports, studies, recommendations, forms, and other project specific information will need to be submitted in paper and in an electronic file format (.PDF, .JPEG) on CD or USB storage device.

Docusign Envelope ID: AFCB16A4-B390-89EA-8013-04580053D90F

V. REFERENCES & MINIMUM QUALIFICATIONS

Provide at least three (3) or more professional, business references with which you have contracted to provide similar services in the past five (5) years. Include the name of the person, its organization, telephone number, fax number, and e-mail address. Include any governmental agencies, with the same contact and descriptive information for which you have provided similar service within the past five (5) years.

Provide a brief description of the history and capabilities of the firm. Describe the types of projects or services the firm performs/has performed and the dollar value of each. Provide information regarding your firm's ability to complete this project. Demonstrate that the firm's personnel have experience with similar projects.

Identify all unresolved and ongoing claims and disputes against your firm in excess of $500,000. Include any claims against the principals of your firm or any claims your company may have against a third party. Provide a history of litigation, including the outcomes, for the past five (5) years.

The responding firm shall provide a statement of assurance that the firm is not presently in violations of any statutes or regulatory rules that might have an impact on the firm's operations. All applicable laws and regulations of the State of Florida and ordinances and regulations of the City of St. Pete Beach will apply.

Provide the overall bonding capacity for the company and provide a history of any claims against the Proposer's previous bonds for the past five (5) years.

The City shall be the sole final judge of qualifications of Proposer to perform service and reserves the exclusive right to accept or reject any proposal as it deems to be in the best interests of the City. The City reserves the right to make such investigation, as it deems necessary, to determine the ability of any proposer to perform the work or service requested. Failure to comply with the requirements of this section may be grounds for rejecting a response.

Docusign Envelope ID: AFCB16A4-B390-89EA-8013-04580053D90F

VI. CONTRACTOR'S PROPOSAL SUBMITTAL

The company that is submitting a proposal declares that it has extensive experience in Wastewater System Rehabilitation Services, including manhole rehabilitation, pipe lining and point repairs.

The undersigned, as Proposer, hereby declares that the only person or persons interested in the Proposal as principal or principals are named herein, and that no person other than herein mentioned has any interest in the Proposal or in the Agreement to be entered into; that this Proposal or Agreement is made without connection with any other person, company, or parties making a Proposal; and that it is in all respects fair and in good faith without collusion or fraud.

The Proposer further declares that they have examined the site of the work and informed themselves fully in regard to all conditions pertaining to the place where the work is to be done; that they have examined the Plans and Specifications for the work and Contract Documents relative thereto, and have read all special provisions furnished prior to the opening of proposals; and that they have satisfied themselves relative to the materials to be supplied and work to be performed.

The Proposer proposes and agrees, if the Proposal is accepted, to contract with the City of St. Pete Beach, Florida, in the form of an Agreement specified for **"Wastewater System Rehabilitation Services"** in St. Pete Beach, Florida, in full and complete accordance with the shown, noted, described, and reasonably intended requirements of the Plans, Specifications, and Contract Documents, to the full and entire satisfaction of the City of St. Pete Beach, Florida.

The successful Proposer shall be required to utilize the template Agreement in this Request for Proposals (RFP) and any questions regarding the Agreement must be addressed during the RFP process before submittal. The City reserves the right to respond or not respond to questions in the form of an addendum.

The Proposer proposes to furnish all materials, equipment, labor, and perform the work submitted in their proposal schedule for the City of St. Pete Beach **"Wastewater System Rehabilitation Services."**

COMPANY:_____ DATE: _____

ADDRESS:_____ PHONE:_____

PROPOSER: _____ NAME: _____

(SIGNATURE) (PRINT NAME & TITLE)

STATE OF FLORIDA
COUNTY OF _____

The foregoing instrument was sworn to (or affirmed), subscribed, and acknowledged before me by means of ☐ physical presence or ☐ online notarization, this _____ day of _____, 2026, by_____, who is personally known to me or has produced _____ as identification.

(SEAL)

_____
Notary Public – State of Florida

_____
(Print, Type, Stamp, or Commissioned Name of Notary Public)

SUBMIT PROPOSAL TO: Electronically via Bonfire only

Docusign Envelope ID: AFCB16A4-B390-89EA-8013-04580053D90F

VII. PUBLIC ENTITY CRIMINAL AFFIDAVIT

SWORN STATEMENT – PUBLIC ENTITY CRIMES

PURSUANT TO § 287.133 (3)(a), FLORIDA STATUTES, ON PUBLIC ENTITY CRIMES
THE FORM MUST BE SIGNED AND SWORN TO IN THE PRESENCE OF A NOTARY PUBLIC OR OTHER OFFICIAL AUTHORIZED TO ADMINISTER OATHS.

1. This sworn statement is submitted to: City of St. Pete Beach

by: _____
(Print individual's name and title)

for: _____
(Print name of entity submitting sworn statement)

at: _____
(Business address)

and (if applicable), its Federal Employer Identification Number (FEIN):

_____
(FEIN)
or, if the entity has no FEIN, include the Social Security Number:

_____
(SSN)

by the individual signing this sworn statement: _____
(Signature)

2. I understand that a "public entity crime" as defined in § 287.133 (1)(g), Fla. Stat., means a violation of any State or Federal law by a person with respect to and directly related to the transaction of business with any public entity or with an agency or political subdivision of any other state or of the United States including, but not limited to, any proposal or contract for goods or services, any lease for real property, or any contract for the construction or repair of a public building or public work, involving antitrust, fraud, theft, bribery, collusion, racketeering, conspiracy, or material misrepresentation.

3. I understand that "convicted" or "conviction" as defined in § 287.133 (1)(b), Fla. Stat., means a finding of guilt or a conviction of public entity crime with or without an adjudication of guilt in any Federal or State trial court of record relating to charges brought by indictment or information after July 1, 1989, as a result of a jury verdict, non-jury trial, or entry of a plea of guilty or nolo contendere.

4. I understand that an "affiliate" as defined in § 287.133 (1)(a), Fla. Stat., means:
   a. A predecessor or successor of a person convicted of a public entity crime or
   b. An entity under the control of any natural person who is active in the management of the entity and who has been convicted of a public entity crime. The term "affiliate" includes those officers, directors, executives, partners, shareholders, employees, members, and agents who are active in the management of an affiliate. The ownership by one (1) person of shares constituting a controlling interest in another person or a pooling of equipment or income among persons when not for fair market value under the arm's length agreement, shall be a prima facie case that one (1) person controls another person. A person who knowingly enters into a joint venture with a person who has been convicted of a public crime in Florida during the preceding thirty-six (36) months shall be considered an

Docusign Envelope ID: AFCB16A4-B390-89EA-8013-04580053D90F

affiliate.

5. I understand that a "person" as defined in Section 287.133 (1)(e), Fla. Stat., means any natural person or any entity organized under the laws of any state or of the United States with the legal power to enter into a binding contract and which proposals or applies to proposal on contracts let by a public entity, or which otherwise transacts or applies to transact business with a public entity. The term "person" includes those officers, directors, executives, partners, shareholders, employees, members, and agents who are active in management of an entity.

6. Based on information and belief, the **statement which I have marked below is true** in relation to the entity submitting this sworn statement (indicate which statement applies).

☐ Neither the entity submitting this sworn statement, nor any of its officers, directors, executives, partners, shareholders, employees, members, or agents who are active in the management of the entity nor any affiliate of the entity has been charged with and convicted of a public entity crime subsequent to July 1, 1989.

☐The entity submitting this sworn statement or one (1) or more of its officers, directors, executives, partners, shareholders, employees, members, or agents who are active in the management of the entity or an affiliate of the entity has been charged with and convicted of a public entity crime subsequent to July 1, 1989.

☐The entity submitting this sworn statement or one (1) or more of its officers, directors, executives, partners, shareholders, employees, members, or agents who are active in the management of the entity or an affiliate of the entity has been charged with and convicted of a public entity crime subsequent to July 1, 1989. However, there has been a subsequent proceeding before a Hearing Office of the State of Florida, Division of Administrative Hearings and the Final Order entered by the Hearing Officer determined that it was not in the public interest to place the entity submitting this sworn statement on the convicted vendor list (attach a copy of the final order).

I UNDERSTAND THAT THE SUBMISSION OF THIS FORM TO THE CONTRACTING OFFICE FOR THE PUBLIC ENTITY IDENTIFIED IN PARAGRAPH 1 ABOVE IS FOR THE PUBLIC ENTITY ONLY AND THAT THIS FORM IS VALID THROUGH DECEMBER 31 OF THE CALENDAR YEAR IN WHICH IT IS FILED. I ALSO UNDERSTAND THAT I AM REQUIRED TO INFORM THE PUBLIC ENTITY PRIOR TO ENTERING INTO A CONTRACT IN EXCESS OF THE THRESHOLD AMOUNT PROVIDED IN SECTION 287.017, FLORIDA STATUTES, FOR CATEGORY TWO OF ANY CHANGE IN THE INFORMATION CONTAINED IN THIS FORM.

STATE OF FLORIDA
COUNTY OF _____

The foregoing instrument was sworn to (or affirmed), subscribed, and acknowledged before me by means of ☐ physical presence or ☐ online notarization, this _____ day of _____, 2026, by_____, who is personally known to me or has produced _____ as identification.

(SEAL)

_____
Notary Public – State of Florida

_____
(Print, Type, Stamp, or Commissioned
Name of Notary Public)

Docusign Envelope ID: AFCB16A4-B390-89EA-8013-04580053D90F

VIII. NON-COLLUSION AFFADAVIT

STATE OF _____ COUNTY OF _____

I state that **I**_____ of _____,
(Name and Title) (Name of Firm)

I am authorized to make this affidavit on behalf of my firm and its owner, directors and officers. I am the person responsible in my firm for the price(s) and amount(s) of this Response, and the preparation of the Response. I state that:

1. The price(s) and amount(s) of this Response have been arrived at independently and without consultation, communication or agreement with any other Provider, potential provider, Proposal, or potential Proposal.
2. Neither the price(s) nor the amount(s) of this Response, and neither the approximate price(s) nor approximate amount(s) of this Response, have been disclosed to any other firm or person who is a Provider, potential Provider, Proposal, or potential Proposal, and they will not be disclosed before Proposal opening.
3. No attempt has been made or will be made to induce any firm or persons to refrain from submitting a Response for this contract, or to submit a price(s) higher that the prices in this Response, or to submit any intentionally high or noncompetitive price(s) or other form of complementary Response.
4. The Response of my firm is made in good faith and not pursuant to any agreement or discussion with, or inducement from, any firm or person to submit a complementary or other noncompetitive Response.
5. _____, its affiliates, subsidiaries, officers, director, and employees (Name of Firm) are not currently under investigation, by any governmental agency and have not in the last three years been convicted or found liable for any act prohibited by State or Federal law in any jurisdiction, involving conspiracy or collusion with respect to Proposal, on any public contract, except as follows:

I state that I and the named firm understand and acknowledge that the above representations are material and important, and will be relied on by the State of Florida for which this Response is submitted. I understand and my firm understands that any misstatement in this affidavit is, and shall be treated as, fraudulent concealment from the State of Florida of the true facts relating to the submission of responses for this contract.

Name of Organization:_____ Signed By: _____

Print Name:_____

The foregoing instrument was sworn to (or affirmed), subscribed, and acknowledged before me by means of ☐ physical presence or ☐ online notarization, this _____ day of _____, 2026, by _____, who is personally known to me or has produced _____ as identification.

(SEAL)

_____
Notary Public – State of Florida

_____
(Print, Type, Stamp, or Commissioned
Name of Notary Public)

Docusign Envelope ID: AFCB16A4-B390-89EA-8013-04580053D90F

CONTRACT DOCUMENTS

TECHNICAL SPECIFICATIONS

FOR

St. Pete Beach
The Sunset Capital of Florida
PUBLIC SERVICES

CITY OF ST. PETE BEACH

SOLICITATION NAME:

Wastewater System Rehabilitation Services

MANHOLE REHABILITATION

PIPE LINING

POINT REPAIRS

Docusign Envelope ID: AFCB16A4-B390-89EA-8013-04580053D90F

TABLE OF CONTENTS

SECTION 1 – GENERAL

1.01 LOCATION OF THE WORK SITE AND ACCESS

1.02 SCOPE OF WORK

1.03 PROJECT SUMMARY

1.04 CONTRACT DRAWINGS AND SPECIFICATIONS

1.05 FIELD ENGINEERING

1.06 SAFEGUARDING SURVEY MARKS

1.07 INSPECTION AUTHORITY

1.08 PROJECT SCHEDULE

1.09 MATERIALS AND EQUIPMENT

1.10 MANUFACTURER

1.11 SAMPLES

1.12 EQUIVALENT QUALITY

1.13 MATERIAL AND EQUIPMENT DELIVERY AND STORAGE

1.14 SERVICE OF MANUFACTURER'S REPRESENTATIVE

1.15 CONTAMINANTS CONTAINMENT/DISPOSITION

1.16 PREVENTION, CONTROL, AND ABATEMENT OF EROSION AND WATER POLLUTION

1.17 MAINTENANCE OF STORM DRAINAGE SYSTEM

1.18 SPILL OR DISCHARGE OF WASTEWATER OR RECLAIMED WATER

1.19 SEQUENCE OF OPERATION

1.20 WORK IN STREETS AND HIGHWAYS

1.21 WORK IN PRIVATE PROPERTY

Docusign Envelope ID: AFCB16A4-B390-89EA-8013-04580053D90F

1.22 PERMITS

1.23 FIELD OFFICE AND APPURTENANT STRUCTURES

1.24 CONTRACTOR'S SIGN

1.25 MOBILIZATION

1.26 WATER PURCHASE

1.27 TRAFFIC CONTROL

1.28 TREE PROTECTION

1.29 TREE REMOVAL AND REPLACEMENT

1.30 UTILITIES

1.31 NEIGHBORHOOD NOTIFICATION

1.32 SHOP, FIELD, AND LABORATORY TESTING

1.33 SALVAGED MATERIALS

SECTION 2 – PAY ITEM DESCRIPTIONS

2.01 SCOPE

2.02 ESTIMATED QUANTITIES

2.03 WORK OUTSIDE AUTHORIZED LIMITS

2.04 MEASUREMENT STANDARDS

2.05 AREA MEASUREMENTS

2.06 LUMP SUM ITEMS

2.07 PAY ITEM DESCRIPTIONS

WASTEWATER SYSTEM MANHOLE REHABILITATION
WASTEWATER SYSTEM PIPE LINING
WASTEWATER SYSTEM POINT REPAIRS

SECTION 3 – SUBMITTALS

Docusign Envelope ID: AFCB16A4-B390-89EA-8013-04580053D90F

3.01 GENERAL

3.02 CONTRACTOR RESPONSIBILITIES

3.03 SUBMITTAL NUMBERING

3.04 SUBMITTAL REVIEW

SECTION 4 – AS BUILTS

4.01 MINIMUM AS-BUILT DRAWING STANDARDS FOR ALL AS-BUILT DRAWINGS

4.02 AS-BUILT DRAWINGS PREPARATION

4.03 AS-BUILT DRAWINGS SUBMITTAL

SECTION 5 – CONCRETE, MASONRY, AND REINFORCING STEEL

5.01 GENERAL

5.02 PORTLAND CEMENT CONCRETE

5.03 REINFORCING STEEL

5.04 FIBROUS CONCRETE REINFORCEMENT

5.05 PLACEMENT OF REINFORCEMENT

5.06 PLACEMENT OF CONCRETE

5.07 CURING OF CONCRETE

5.08 FINISHING OF CONCRETE

5.09 CONCRETE BRICK

5.10 CLAY BRICK

5.11 MASONRY BLOCK

5.12 MORTAR

5.13 GROUT

SECTION 6 – EXCAVATION AND BACKFILL

Docusign Envelope ID: AFCB16A4-B390-89EA-8013-04580053D90F

6.01 GENERAL

6.02 TRENCH SAFETY

6.03 WORK IN WETLANDS, MANGROVES, AND PRESERVATION AREAS

6.04 CLEARING AND GRUBBING

6.05 ROADWAY EXCAVATION

6.06 TRENCH EXCAVATION

6.07 STRUCTURE EXCAVATION

6.08 EXCAVATION OF UNSUITABLE MATERIAL

6.09 SHEETING, SHIELDING, AND SLOPING

6.10 DEWATERING

6.11 BORROW MATERIAL

6.12 BEDDING MATERIAL

6.13 STRUCTURAL SLAB BEDDING

6.14 BACKFILL MATERIAL

6.15 BACKFILL COMPACTION

6.16 BACKFILLING OF TRENCH

6.17 BACKFILLING STRUCTURES

6.18 BACKFILLING UNDER ROADWAYS

6.19 DISPOSING OF LEFTOVER MATERIAL

6.20 ADJACENT FACILITIES

6.21 TEMPORARY SUPPORTS

6.22 FLOWABLE FILL

SECTION 7 – SURFACE RESTORATION

7.01 GENERAL

Docusign Envelope ID: AFCB16A4-B390-89EA-8013-04580053D90F

7.02 ROADWAY RESTORATION

7.03 TEMPORARY PAVEMENT

7.04 SHELL BASE

7.05 LIMEROCK BASE

7.06 CRUSHED (RECLAIMED) CONCRETE BASE

7.07 ASPHALTIC CONCRETE PAVEMENT

7.08 BRICK PAVEMENT

7.09 CURB AND GUTTER

7.10 CONCRETE SIDEWALK

7.11 HEXAGON BLOCK SIDEWALK

7.12 DRIVEWAY AND PARKING LOT

7.13 DRIVEWAY - ASPHALT

7.14 DRIVEWAY - CONCRETE

7.15 DRIVEWAY - PEAGRAVEL

7.16 DRIVEWAY - SHELL

7.17 GRASS

7.18 EXPANSION JOINT MATERIAL

SECTION 8 – PAINTING

8.01 GENERAL

8.02 SUBMITTALS

8.03 PAINTING SCHEDULES AND SYSTEMS

8.04 EXECUTION

Docusign Envelope ID: AFCB16A4-B390-89EA-8013-04580053D90F

SECTION 9 – PIPING MATERIALS: DUCTILE IRON PIPE AND FITTINGS

9.01 GENERAL

9.02 PIPE

9.03 FITTINGS

9.04 JOINTS – BURIED PIPE AND FITTINGS

9.05 JOINTS – EXPOSED PIPE AND FITTINGS

9.06 DETECTION

9.07 ZINC/EPOXY/FLUOROPOLYMER PROTECTIVE COATING

SECTION 10 – PIPING MATERIALS: PVC PRESSURE PIPE

10.01 GENERAL

10.02 PIPE

10.03 FITTINGS

10.04 JOINTS

10.05 DETECTION

10.06 MARKINGS AND COLOR CODING

10.07 HARNESSING

10.08 INSPECTION AND TESTING

SECTION 11 – PIPING MATERIALS: HDPE PRESSURE PIPE

11.01 SCOPE OF WORK

11.02 QUALIFICATIONS

11.03 POLYETHYLENE PRESSURE PIPE

11.04 JOINTS

11.05 DETECTION

11.06 IDENTIFICATION

Docusign Envelope ID: AFCB16A4-B390-89EA-8013-04580053D90F

11.07 INSTALLING POLYETHYLENE PRESSURE PIPE AND FITTINGS

11.08 INSPECTION AND TESTING

SECTION 12 – PRESSURE PIPE CONSTRUCTION

12.01 GENERAL

12.02 DATA TO BE SUBMITTED

12.03 MATERIALS

12.04 CONNECTIONS TO EXISTING MAINS

12.05 CONSTRUCTION OPERATIONS

12.06 LAYING AND JOINTING PRESSURE PIPELINES

12.07 PIPELINE CLEANING

12.08 TESTING AND DISINFECTION OF PRESSURE PIPELINES

12.09 SURFACE RESTORATION AND MISCELLANEOUS

SECTION 13 – DIRECTIONAL BORING OF PIPE

13.01 GENERAL

13.02 TESTING

13.03 QUALIFICATIONS

13.04 SUBMITTALS

13.05 MATERIALS

13.06 SITE CONDITIONS

13.07 DAMAGE RESTORATION & REMEDIATION

13.08 QUALIFICATIONS FOR REJECTION OF DIRECTIONAL BORE

13.09 PRODUCT LOCATING AND TRACKING

13.10 PRODUCT BORE HOLE DIAMETER

Docusign Envelope ID: AFCB16A4-B390-89EA-8013-04580053D90F

13.11 EQUIPMENT REQUIREMENTS

13.12 THRUST / PULLBACK REQUIREMENTS

13.13 INSTALLATION PROCESS

13.14 PIPELINE TESTING

SECTION 14 – JACKING AND BORING

14.01 SCOPE OF WORK

14.02 OPERATIONS ON THE CITY OF ST. PETE BEACH OR STATE OF FLORIDA PROPERTY

14.03 SHOP DRAWINGS

14.04 SUBMITTALS

14.05 CASING PIPE

14.06 CARRIER PIPE

14.07 CASING SPACERS

14.08 TUNNEL LINER PLATES

14.09 CASING END SEALS

14.10 CONSTRUCTION

14.11 INSTALLING CARRIER PIPE IN CASING PIPE

14.12 TESTING

SECTION 15 – FLUSHING, TESTING, AND DISINFECTION

15.01 WORK INCLUDED

15.02 REFERENCES

15.03 SUBMITTALS

15.04 QUALITY ASSURANCE

15.05 REGULATORY REQUIREMENTS

Docusign Envelope ID: AFCB16A4-B390-89EA-8013-04580053D90F

15.06 DISINFECTION CHEMICALS

15.07 FLUSHING AND PRESSURE TESTING – PIPING

15.08 DISINFECTION FOR WATER MAIN INSTALLATION

15.09 BACTERIOLOGICAL SAMPLING FOR WATER MAIN INSTALLATION

15.10 QUALITY CONTROL

15.11 CONNECTIONS TO EXISTING MAINS

SECTION 16 – SANITARY SEWER BYPASS PUMPING

16.01 SCOPE OF WORK

16.02 PUBLIC IMPACTS

16.03 SUBMITTALS

16.04 EQUIPMENT

16.05 SITE CONDITIONS

16.06 ON-SITE MONITORING

16.07 OPERATIONS

16.08 DAMAGE RESTORATION & REMEDIATION

SECTION 17 – VALVES AND APPURTENANCES

17.01 GENERAL

17.02 TOOLS

17.03 GATE VALVES

17.04 PRESSURE SUSTAINING AND CHECK VALVE

17.05 BALL VALVES FOR PVC PIPE

17.06 BUTTERFLY VALVES

17.07 PLUG VALVES

17.08 VALVE ACTUATORS

Docusign Envelope ID: AFCB16A4-B390-89EA-8013-04580053D90F

17.09 AIR RELEASE VALVES

17.10 VALVE BOXES

17.11 CORPORATION COCKS

17.12 FLANGE ADAPTER COUPLINGS

17.13 FLEXIBLE COUPLINGS

17.14 HOSE BIBS

17.15 SLOW CLOSING AIR AND VACUUM VALVES

17.16 SURGE ANTICIPATOR VALVES

17.17 CHECK VALVES

17.18 HYDRANTS

17.19 RESTRAINING CLAMPS

17.20 TAPPING SLEEVES AND GATE VALVES

17.21 SINGLE ACTING ALTITUDE VALVES

17.22 INSTALLATION

17.23 HYDRANT INSTALLATION

17.24 SHOP PAINTING

17.25 FIELD PAINTING

17.26 INSPECTION AND TESTING

SECTION 18 – SANITARY SEWER CONSTRUCTION

18.01 GENERAL

18.02 DATA TO BE SUBMITTED

18.03 MATERIALS

18.04 CONNECTIONS TO EXISTING SANITARY SEWERS

Docusign Envelope ID: AFCB16A4-B390-89EA-8013-04580053D90F

18.05 CONSTRUCTION OPERATIONS

18.06 MANHOLE CONSTRUCTION

18.07 LAYING AND JOINTING PIPELINES

18.08 TESTING OF SEWER PIPELINES

18.09 SANITARY SEWER PIPE REPAIRS

SECTION 19 – CEMENTITIOUS REHABILITATION – NOT APPLICABLE

SECTION 20 – CCTV INSPECTION AND PIPE CLEANING

20.01 SCOPE OF SERVICES AND WORK PHASING FOR SYSTEM CCTV INSPECTION AND PIPE CLEANING

20.02 COMPLIANCE AND ACCEPTANCE

20.03 CLEANING EQUIPMENT

20.04 REFERENCES DOCUMENTS

20.05 GENERAL EXECUTION

20.06 SUBMITTALS

20.07 OWNER RIGHTS

20.08 EMERGENCY RESPONSE

20.09 SEQUENCE OF INSPECTION AND CLEANING

SECTION 21 – CURED-IN-PLACE PIPE LINER (CIPP)

21.01 GENERAL

21.02 REFERENCE DOCUMENTS

21.03 QUALIFICATION REQUIREMENTS

21.04 SUBMITTALS

21.05 MATERIALS

21.06 STRUCTURAL REQUIREMENTS

Docusign Envelope ID: AFCB16A4-B390-89EA-8013-04580053D90F

21.07 INSTALLATION

21.08 CIPP MAIN LINER TERMINATION AND CONNECTION IN MANHOLES

21.09 SERVICE RECONNECTION

21.10 INSTALLATION RESPONSIBILITIES FOR INCIDENTAL ITEMS

21.11 QUALITY ASSURANCE PROCEDURES

SECTION 22 – PRECAST POLYMER CONCRETE STRUCTURES – NOT APPLICABLE

SECTION 23 – FIBERGLASS WET WELL OR MANHOLE LINER

23.01 GENERAL

23.02 MATERIALS

23.03 WET WELL FABRICATION

23.04 FRP MANHOLE LINER DESIGN

23.05 PHYSICAL REQUIREMENTS

23.06 TEST METHODS

23.07 INSTALLATION

23.08 SHIPPING AND HANDLING

SECTION 24 – SUBMERSIBLE SEWAGE PUMPS – NOT APPLICABLE

SECTION 25 – PUMP STATION CONTROLS – NOT APPLICABLE TO

SECTION 26 – ELECTRICAL – NOT APPLICABLE

SECTION 27 – VARIABLE FREQUENCY DRIVES – NOT APPLICABLE

SECTION 28 – ODOR CONTROL SYSTEMS – NOT APPLICABLE

SECTION 29 – PRECAST CONCRETE BUILDING – NOT APPLICABLE

Docusign Envelope ID: AFCB16A4-B390-89EA-8013-04580053D90F

SECTION 30 – DIESEL DRIVEN GENERATOR WITH WEATHERPROOF ENCLOSURE – NOT APPLICABLE

SECTION 31 – MISCELLANEOUS EQUIPMENT – NOT APPLICABLE

SECTION 32 – STATE REVOLVING FUND (SRF) REQUIREMENTS – NOT APPLICABLE

SECTION 33 – FRAC-OUT PLAN FOR SUBAQUEOUS CROSSINGS

33.01 GENERAL

33.02 BEST MANAGEMENT PRACTICES (BMPs)

33.03 FRAC-OUT PLAN

33.04 RELEASE PROCEDURE

33.05 DRILLING MUD CONTAINMENT PLAN

SECTION 34 – MANHOLE INSPECTION

34.01 SCOPE OF SERVICES AND WORK PHASING

34.02 REQUIREMENTS

34.03 QUALITY ASSURANCE

34.04 SHOP DRAWINGS AND SUBMITTALS

34.05 NOTIFICATION

34.06 EXECUTION

34.07 MANDATORY INSPECTION HEADER INFORMATION

34.08 MANHOLE COMPONENT OBSERVATIONS

34.09 MANHOLE INTERIOR INSPECTION

34.10 CONNECTING PIPE DETAILS

34.11 MANHOLE SKETCH, MAP, UPDATE, AND NOTES

Docusign Envelope ID: AFCB16A4-B390-89EA-8013-04580053D90F

34.12 NOTIFICATION OF EMERGENCY CONDITIONS

34.13 COMPLETION

34.14 PHOTOGRAPH REQUIREMENTS

34.15 MANHOLE NUMBERING, FORMS, AND DEFECT CODES

34.16 SITE RESTORATION

34.17 DELIVERABLES

SECTION 35 – CHEMICAL SEALING OF HOST PIPE AND SERVICE CONNECTIONS

35.01 GENERAL

35.02 PRODUCTS

35.03 SUBMITTALS

35.04 EQUIPMENT

35.05 EXECUTION

SECTION 36 – REMOVAL OF PROTRUDING SERVICE CONNECTIONS

36.01 GENERAL

36.02 PRODUCTS

36.03 EXECUTION

SECTION 37 – WASTEWATER STRUCTURE REHABILITATION

37.01 GENERAL

37.02 GOVERNING STANDARDS

37.03 DEFINITIONS

37.04 QUALIFICATIONS

37.05 SUBMITTALS

Docusign Envelope ID: AFCB16A4-B390-89EA-8013-04580053D90F

37.06 QUALITY ASSURANCE/ QUALITY CONTROL

37.07 CONTAINMENT AND SITE CONDITIONS

37.08 WARRANTY

37.09 MATERIALS

37.10 REPAIR & PREPARATION

37.11 COATING MATERIAL APPLICATION

37.12 COATING SYSTEM SPECIFICATION SHEETS

END OF SECTION

Docusign Envelope ID: AFCB16A4-B390-89EA-8013-04580053D90F

THIS PAGE INTENTIONALLY LEFT BLANK

Docusign Envelope ID: AFCB16A4-B390-89EA-8013-04580053D90F

SECTION 1 - GENERAL

1.01 LOCATION OF THE WORK SITE AND ACCESS

Access to the work sites shall be over streets and walkways. Any damage to existing pavement surface and base or other surface improvements outside the Contract Pay Limits, attributable to the Contractor's activities, shall be restored to like-new condition by the Contractor at the Contractor's expense.

The proposed work will be located within the City of St. Pete Beach in Pinellas County, FL, throughout the entire wastewater collection and transmission system. Each asset to be rehabilitated and the type of rehabilitation required will be identified in each individual Work Order with the location shown on corresponding geographical exhibits.

1.02 SCOPE OF WORK

The Contractor shall furnish all labor, superintendence, materials, power, light, heat, fuel, water, tools, appliances, equipment, supplies, shop drawings, working drawings and other means of construction necessary or proper for performing and completing the work. The Contractor is responsible for obtaining all required permits necessary for the work, including all applications and review fees, other than those permits which may have already been obtained. The Contractor shall perform and complete the work in a speedy and efficient manner consistent with safety of life and property and to the city’s satisfaction, and in strict accordance with the Contract Documents. The Contractor shall repair or restore all structures and property damaged or disturbed during performance of the work.

The cost of incidental work described in this General Section, for which there are no specific Contract Items, shall be considered as part of the general cost of doing the work and shall be included in the prices for the various Contract Items. No additional payment will be made.

The Contractor shall be solely responsible for the means and methods of construction and the adequacy of his workmanship, materials, and equipment.

1.03 PROJECT SUMMARY

Wastewater System Manhole Rehabilitation (Manhole Project)

The Contractor shall furnish all labor, material, equipment, and services necessary for manhole rehabilitation. The work shall be completed at various locations through the City’s wastewater service area and shall include, but is not limited to, maintenance of traffic, temporary by-pass pumping and/or diversion of wastewater, cleaning, removal and disposal of all sand, rubble, deposits, and other accumulated debris, re-building manhole bench and channels, ring (frame) and cover adjustment and replacement, pavement restoration, inflow/infiltration elimination, surface preparation, cementitious and polymer coatings installation, internal chimney sealing, manhole cover insert installation, testing, project site cleanup and restoration, and all other incidentals as required and directed by the Engineer to complete the work.

Docusign Envelope ID: AFCB16A4-B390-89EA-8013-04580053D90F

Wastewater System Pipe Lining (Lining Project)

The Contractor shall furnish all labor, material, equipment, and services necessary for wastewater pipe rehabilitation using Cured-In-Place-Pipe (CIPP) lining. The work shall be completed at various locations through the City's wastewater service area and shall include, but is not limited to, maintenance of traffic, temporary by-pass pumping and/or diversion of wastewater, cleaning, removal and disposal of all sand, rubble, deposits, and other accumulated debris, CIPP liner installation, reconnection of service laterals, testing of CIPP liners, project site cleanup and restoration, and all other incidentals as required and directed by the Engineer to complete the work.

Wastewater System Point Repairs (Point Repair Project)

The Contractor shall furnish all labor, material, equipment, and services necessary for wastewater point repairs. The work shall be completed at various locations throughout the City's wastewater service area and shall include, but is not limited to, maintenance of traffic, temporary by-pass pumping and/or diversion of wastewater, dewatering, directional drilling, jack and boring, remove unsuitable materials below trench grade, sanitary sewer gravity and force main installation, force main and gravity main connections, remove out of service gravity and force mains, install manhole connections, grout out of service pipe, install valves and associated appurtenances, project site cleanup and restoration, and all other incidentals as required and directed by the Engineer to complete the work.

1.04 CONTRACT DRAWINGS AND SPECIFICATIONS

Where the Contract Drawings and Specifications are not in agreement, the Contract Drawings shall govern. The Contractor shall furnish all labor, equipment, and materials to construct the Project and all miscellaneous and appurtenant work complete in place as specifically described and included under said each Contract Pay Item as shown, specified, or directed by the Engineer in accordance with the obvious or expressed intent of the Contract.

The Technical Specifications for the Project that reference FDOT-SSRBC (Florida Department of Transportation - Standard Specifications for Road and Bridge Construction) pertain to the most recent edition at the date of issuance of these Specifications.

1.04.01 COPIES FURNISHED TO CONTRACTOR

The Contractor shall furnish each of the subcontractors, manufacturers, and material men such copies of the Contract Documents as may be required for their work. Additional copies of the Contract Drawings and Specifications, when requested, may be furnished to the Contractor at cost of reproduction.

1.04.02 SUPPLEMNTARY DRAWINGS

When, in the opinion of the City, it becomes necessary to explain more fully the work to be done or to illustrate the work further or to show any changes which may be required, drawings known as Supplementary Drawings, with specifications pertaining thereto, will be prepared by the Engineer and the City and provided to the Contractor.

Docusign Envelope ID: AFCB16A4-B390-89EA-8013-04580053D90F

1.04.03 CONTRACTOR TO CHECK CONTRACT DRAWINGS AND DATA

The Contractor shall verify all dimensions, quantities and details shown on the Contract Drawings, Supplementary Drawings, Schedules, Specifications or other data received from the City or the Engineer and shall notify the City and Engineer of all errors, omissions, conflicts, and discrepancies found therein. Failure to discover or correct errors, conflicts or discrepancies shall not relieve the Contractor of full responsibility for unsatisfactory work, faulty construction or improper operation resulting therefrom nor from rectifying such conditions at the Contractor's own expense. The Contractor shall assume all responsibility for the making of estimates of the size, kind, and quality of materials and equipment included in work to be done under the Contract with approval by the City.

1.05 FIELD ENGINEERING

The Contractor shall establish and provide all vertical and horizontal control points for this Project including benchmarks. The Contractor shall provide the field layout surveying necessary to properly construct the work as indicated on the Contract Drawings.

All field layout surveying shall be performed under the supervision of a Professional Land Surveyor (Chapter 472, Florida Statutes). The Contractor shall submit the name and registration number of Surveyor as directed by the Engineer. The Engineer reserves the right to check all survey staking and to require adjustments or re-staking by the Contractor in the event that conflicts, or errors are detected.

Water pressure pipelines that are 8-inch or less diameter shall be installed with the required cover using horizontal control stakes provided by the Contractor. Sanitary sewer and sanitary pressure pipelines greater than 8-inch diameter shall be installed using an approved method for line and grade control. Methods for line and grade control shall be submitted to the Engineer for review and acceptance, as specified for shop drawings. Sketches shall be provided by the Contractor showing vertical adjustment necessary for pressure pipelines to adequately clear storm drains and other utilities.

1.06 SAFEGUARDING SURVEY MARKS

The Contractor shall safeguard all existing property monuments, benchmarks, and other survey marks adjacent to and within the Project limits and shall bear the cost of re-establishing them if disturbed or destroyed.

1.07 INSPECTION AUTHORITY

The City or Engineer has ultimate responsibility for contract administration and inspection for this Project. The City or Engineer may assign field inspection responsibilities to a Design Professional and/or City Inspector. Each step of construction is subject to review and acceptance by the City or Engineer prior to proceeding with a subsequent step.

During the progress of the Work and up to the date of final acceptance, the Contractor shall at all times afford representatives of the City, the County, the State, the Department of Environmental

Docusign Envelope ID: AFCB16A4-B390-89EA-8013-04580053D90F

Protection, the Department of Transportation, the Department of Labor, or any other agency with jurisdiction, every reasonable, safe, and proper facility for observation of the work done or being done at the site, and also the manufacture or preparation of materials and equipment at the place of such manufacture or preparation.

The Project line of authority will be presented at the Preconstruction Conference.

1.08 PROJECT SCHEDULE

The Contractor shall submit an electronic version in PDF form within 30 days following the Preconstruction Conference of each Work Order.

Scheduling and progress reporting shall be accomplished using a bar chart to provide a clear and concise comparison of progress.

1.09 MATERIALS AND EQUIPMENT

All materials, appliances, and types of construction shall be in accordance with the Technical Specifications and shall, in no event, be less than that necessary to conform to the requirements of any applicable laws, ordinances, and codes.

All materials and equipment to be incorporated into the Work shall be new, unused, and correctly designed. They shall be of standard first grade quality, produced by expert workmen, and be intended for the use for which they are offered. Materials or equipment which, in the opinion of the Engineer, are inferior or of a lower grade than indicated, specified, or required, will not be accepted.

Projects funded by the State Revolving Fund must comply with the requirements of the American Iron and Steel Requirement unless otherwise specified in the Contract Documents and approved by the Engineer.

1.10 MANUFACTURER

The names of proposed manufacturers, manufacturers' representatives, suppliers, and dealers who are to furnish materials, equipment, or other fittings, shall be submitted by the Contractor to the Engineer for review and acceptance. Such acceptance must be obtained before Shop Drawings will be accepted for review. All transactions with the manufacturer and subcontractors shall be through the Contractor.
Any two or more pieces of material or equipment of the same kind, type, or classification and being used for identical types of service, shall be made by the same manufacturer.

Projects funded by the State Revolving Fund must comply with the requirements of the American Iron and Steel Requirement unless otherwise specified in the Contract Documents and approved by the Engineer.

1.11 SAMPLES

The Contractor shall, when required, submit to the Engineer for review and acceptance, typical samples of material and appliances. The samples shall be properly identified by tags and shall be

Docusign Envelope ID: AFCB16A4-B390-89EA-8013-04580053D90F

submitted sufficiently in advance of the time when they are to be incorporated into the Work so that rejections thereof will not cause delay. A letter of transmittal from the Contractor requesting approval shall accompany all such samples.

1.12 EQUIVALENT QUALITY

In the Contract Documents, whenever an article, material, apparatus, equipment, or process is called for by trade name or by name of a patentee, manufacturer, or dealer, or by reference to catalog of a manufacturer or dealer, it shall be understood as intending to mean and specify the article, material, apparatus, equipment, or process designated, or any equal thereto in quality, finish, design, efficiency, and durability, and equally serviceable for the purposes for which it is intended.

Whenever material or equipment is submitted for review as being equal to that specified, the submittal shall include sufficient information and data to demonstrate that the material or equipment conforms to the Contract requirements. The decision as to whether such material or equipment is equal to that specified shall be made by the Engineer.

Upon rejection of any material or equipment submitted as the equivalent of that specifically named in the Contract, the Contractor shall immediately proceed to furnish the designated material or equipment.

Neither the acceptance by the Engineer of alternate material or equipment as being equivalent to that specified, nor the furnishing of the material or equipment specified, shall in any way relieve the Contractor of responsibility for failure of the material or equipment, due to faulty design, material, or workmanship, to perform the functions required of them by the Contract Documents.

1.13 MATERIAL AND EQUIPMENT DELIVERY AND STORAGE

The Contractor shall deliver materials in ample quantities to ensure the most speedy and uninterrupted progress of the work to complete the work within the allotted time. The Contractor shall also coordinate deliveries to avoid delay in, or impediment of, the progress of the work of any related contractor. The Contractor shall provide space for storage of materials and equipment.

Pipe strung along roads and rights-of-way shall be placed in a manner that will not endanger or restrict pedestrian or vehicular traffic. Pipe strings shall not be allowed outside right-of-way limits.

1.14 SERVICE OF MANUFACTURER'S REPRESENTATIVE

The Contract amount shall include but is not limited to the cost of furnishing a competent and experienced representative of the equipment manufacturer who shall assist the Contractor, when required, to install, adjust, test, and place in operation the equipment in conformity with the Contract Documents. After the equipment is placed in operation, the representative shall make all adjustments and tests required by the Engineer to prove that the installed equipment is in proper and satisfactory operating condition. The representative shall instruct personnel as may be designated by the Engineer in the proper operation and maintenance of such equipment.

Docusign Envelope ID: AFCB16A4-B390-89EA-8013-04580053D90F

1.15 CONTAMINANTS CONTAINMENT/DISPOSITION

Prior to the installation of well points for dewatering, the Contractor shall visually inspect the work area for indications of existing ground water monitoring, wells, or metal caps at grade. The Contractor shall review the work area for monitoring wells or abandoned fuel tanks and shall notify the Engineer in writing if any of the above items exist.

During dewatering activities, contractor to test water for contaminants before discharge. If the water is odorous, contaminated, or discolored (excluding tannic acid or iron), the Contractor shall stop the dewatering activities and shall notify the Engineer in writing of such, and request direction.

When work activities encounter or expose any abnormal condition that may indicate the existence of a hazardous or toxic waste, work activities shall stop in the vicinity of the abnormal condition and the Contractor shall notify the Engineer immediately. The presence of tanks or barrels; discolored earth, metal, wood, or groundwater; visible fumes; abnormal odors; excessively hot earth; smoke; or other conditions that appear abnormal, may be signs of hazardous or toxic wastes and shall be treated with extraordinary caution.

Every effort shall be made by the Contractor to minimize the spread of any hazardous or toxic waste into uncontaminated areas.

The Contractor's operations shall not resume until directed in writing by the Engineer.

Disposition of the hazardous or toxic waste will be made in accordance with the requirements and regulations of any City, County, State, or Federal agency having jurisdiction.

1.16 PREVENTION, CONTROL, AND ABATEMENT OF EROSION AND WATER POLLUTION

The Contractor shall be responsible for prevention, control, and abatement of erosion, siltation, and water pollution resulting from construction of the Project until final acceptance of the Project.

The Contractor shall implement all appropriate turbidity management practices at the point of discharge into a storm sewer, gutter, or other conveyance to ensure that state water quality standards are not violated at the point where the storm drain, gutter, or other conveyance discharges into a surface water.

All necessary provisions shall be taken to ensure compliance with the water quality standards of the State of Florida. Attention is called to Chapter 62-302, Florida Administrative Code, and in particular, the requirements that turbidity shall not exceed 29 NTUs above background level. Adequate silt containment procedures and equipment shall be used to control turbidity, at no additional cost to the City.

1.17 MAINTENANCE OF STORM DRAINAGE SYSTEM

The Contractor shall be responsible at all times to maintain the operation of existing stormwater facilities, or, when existing stormwater facilities are removed, to provide equivalent capacity alternate forms of stormwater removal adequate to prevent upstream flooding in excess of existing conditions. This responsibility shall include but is not limited to the installation of temporary

Docusign Envelope ID: AFCB16A4-B390-89EA-8013-04580053D90F

connections, bypass pumping, or other temporary means necessary until the new drainage system is fully operational.

1.18 SPILL OR DISCHARGE OF WASTEWATER OR RECLAIMED WATER

The discharge of wastewater or effluent (reclaimed water) into waters of the State and/or into canals, ditches, and ponds that are connected to waters of the State is prohibited. Any spill or discharge of wastewater or reclaimed water shall be immediately reported to the Engineer, the City's Project Manager, and the City's Emergency Dispatch Center. Contact information will be provided for all necessary City personnel and the Engineer at the Preconstruction Conference. In the event of a spill or discharge, the Contractor shall immediately control, contain, and stop the spill or discharge and shall repair any damage to the City's facilities.

The Contractor shall be responsible for any penalties and costs charged to the City by the FDEP and for all costs incurred by the City as a result of the Contractor's actions or as a result of the Contractor's negligence. The fines, and anticipated costs, which may be incurred by the City as a result of the Contractor's actions or negligence, shall be paid to the City within 30 days, or the costs incurred will be deducted from the total Contract amount.

1.19 SEQUENCE OF OPERATION

1.19.01 PIPELINE WORK

It is the intent of the City that all pipeline work associated with the Project be installed to completion in a timely and orderly manner to minimize inconvenience to the Public. Pipe and pipe materials shall not be stored or strung in residential areas more than 3 weeks in advance of pipe installation unless otherwise approved by the Engineer.

The Contractor shall include in the Project Schedule a Sequence of Operations including, but not limited to, the following components:

A. Pipe and pipe material storage
B. Bypass Pumping
C. Backfilling
D. Testing and repairs
E. Disinfection
F. Surface Restoration and Cleanup

1.19.02 PUMP/LIFT STATION WORK

It is essential that any Project work conducted at Pump/Lift Station sites be sequenced to minimize obstruction of normal daily operations of the Pump/Lift Station.

The Contractor shall include in the Project Schedule a Sequence of Operations including, but not limited to, the following components:

A. Equipment and material storage
B. Bypass Pumping

Docusign Envelope ID: AFCB16A4-B390-89EA-8013-04580053D90F

C. Testing and repairs
D. Surface Restoration and Cleanup

1.19.03 MISCELLANEOUS

Utility Companies may be present on the work site adjusting their facilities and installing new facilities. The Contractor's work shall be scheduled in such a manner as to minimize conflicts with various utility companies.

The Contractor shall clean up the site for each phase of work in accordance with the Contract Documents and confine work and personnel to designated areas in accordance with the Specifications. Before proceeding to a subsequent phase of work, unless otherwise approved by the Engineer.

1.19.04 NO TIME EXTENSION

If the Engineer orders construction, or a phase of construction, to be stopped due to the Contractor's neglect to adhere to the Sequence of Operations as outlined herein, the Stop Work Order shall not constitute a basis for extension of time.

1.20 WORK IN STREETS AND HIGHWAYS

All work within streets and highways shall be subject to the regulations and requirements of the City of St. Pete Beach, FDOT, and all other agencies with jurisdiction of the streets and highways in the work limits.

Methods and materials of construction used in restoration within such streets and highways shall conform to the requirements, inspection, and acceptance of the duly authorized representatives of the appropriate agency having jurisdiction. Restoration Work shall include but not be limited to: removal and replacement of pavement, sidewalk, curb, and gutter; replacement of storm sewer facilities; excavation and backfilling; and storage of materials and equipment.

1.21 WORK IN PRIVATE PROPERTY

The Contractor shall not trespass upon or in any way disturb private property without first obtaining written permission from the City to do so. In the event that, in the opinion of the Contractor, obtaining a temporary construction easement outside the limits of the right-of-way, of City-owned property, or of the easement(s) obtained by the City is necessary or desirable, it shall be the sole responsibility of the Contractor to obtain such easement from the owner of the property. If such easement is obtained by the Contractor, it shall contain provision to hold the City harmless from any operations of the Contractor within the easement limits. The Contractor shall not conduct construction operations on private property outside the limits of the right-of-way, of City-owned property, or of the easement(s) obtained by the City unless a copy of the Temporary Construction Easement Agreement is filed with the Engineer. It shall be the Contractor's responsibility to work equipment around poles, trees, or other obstructions and to do so at his own expense. The Contractor shall ensure all employees have a badge or visible identification during any time that they on the project site or within private property. This identification must be worn so that it is readily recognized and readable to the public.

Docusign Envelope ID: AFCB16A4-B390-89EA-8013-04580053D90F

Upon completion of work in easements, the Contractor shall, at no additional expense, restore the property, including all fences or other structures disturbed by his operations, to the full satisfaction of the City and shall obtain from the City a written release stating that restoration has been satisfactorily made. A copy of the completed written release shall be furnished to the City prior to payment. All items within the street right-of-way or sewer easement shall be removed, or removed and replaced, or restored as directed by the City.

1.22 PERMITS

Construction projects performed for the City will require licenses and permits in the same manner as private construction projects within the City.

The Contractor shall secure, at his expense, all licenses and permits, and shall comply with all applicable laws, regulations, and codes as required by the State of Florida and/or the City of St. Pete Beach whether performed by the Contractor or by others. The Contractor must be registered to complete such work within Pinellas County.

1.23 FIELD OFFICE AND APPURTENANT STRUCTURES

No field office or appurtenant structures by the Contractor, any subcontractor, or any material supplier, will be allowed on the Project site.

Space on City property or rights-of-way proposed to be used for storage and a field office for the Contractor shall be approved by the Engineer prior to installation providing such uses will not interfere in any manner with the construction of the work or the operation of existing facilities.

1.24 CONTRACTOR'S SIGN

No sign by the Contractor, any subcontractor, or any material supplier, will be allowed on the Project site.

1.25 MOBILIZATION

Mobilization shall include but is not limited to all preparatory work and operations necessary to begin the Project, including moving of personnel, equipment, traffic control, and all else necessary to commence work. The cost of bonds, insurance, shop drawings, and preconstruction expenses shall also be included.

If a separate Pay Item is included for mobilization, payment will be as specified for that Pay Item. If no Pay Item is included, costs for mobilization shall be included with the costs for the major Work items included in the Proposal.

1.26 WATER PURCHASE

Water used in connection with this Project must be coordinated with Pinellas County. Reclaimed water used in connection with this Project must be coordinated with the City.

Docusign Envelope ID: AFCB16A4-B390-89EA-8013-04580053D90F

1.27 TRAFFIC CONTROL

The Contractor shall provide required traffic controls under City observation. The Contractor shall notify the City's Project Manager a minimum of 2 working days prior to any construction affecting traffic flow. A Maintenance of Traffic plan drawing shall be submitted for review by the Engineer prior to each lane closure or opening during construction. All traffic control devices utilized during construction shall be provided by the Contractor and meet the requirements set forth in the latest revision of U.S. Department of Transportation Federal Highway Administration's "Manual on Uniform Traffic Control Devices for Streets and Highways" and the Florida State Department of Transportation's "Standard Plans for Road and Bridge Construction." Failure or refusal, on the part of the Contractor, to install, maintain and/or position traffic control devices promptly, fully, and in an acceptable manner, shall be sufficient cause for the City, after 24-hour notice, to perform the traffic control with its own organization, or to contract with any other individual, firm, or corporation to perform the required traffic control. All costs and expenses incurred thereby shall be charged against the defaulting Contractor, and the amount thereof deducted from any money due, or which may become due him, or shall be charged against the Contract Bond. Any Work performed as described by this paragraph, shall not relieve the Contractor in any way of his responsibility for the Work performed by him.

Traffic shall be performed so that vehicular traffic shall be maintained on with at least one 10-foot wide lane in each direction at all times. An acceptable detour route shall be developed by the Contractor to redirect traffic when and where necessary, with the approval of the Transportation Special Events Division. Temporary lanes shall be constructed with a minimum 1-inch thick asphaltic concrete surface over a 6-inch thick limerock base compacted to 98% of the maximum density in accordance with AASHTO T-180.

Failure of the Contractor to comply with any of the above traffic control requirements may result in issuance of a stop work order until the violation is corrected.

All maintenance of traffic in the FDOT right-of-way shall be in accordance with FDOT requirements.

1.28 TREE PROTECTION

Particular care shall be taken by the Contractor to protect trees during construction by erecting approved barricades to prevent unnecessary damage to trunk and roots during construction. Such barriers shall protect the area within the dripline.

The Contractor shall prune all branches that interfere with construction in accordance with American Forestry Association Standards. Roots over 2-inch diameter shall be preserved wherever possible. If root pruning is required, roots shall be cut cleanly.

Temporary soil deposits, concrete block, concrete wash, or solvents shall not be placed within the dripline. The grade within the dripline shall be preserved. If adjacent grade is altered, protective measures such as those described in the Florida State Division of Forestry "Tree Protection Manual for Builders and Developers" shall be constructed to protect the tree(s) from deleterious effects of the grade change.

Docusign Envelope ID: AFCB16A4-B390-89EA-8013-04580053D90F

1.29 TREE REMOVAL AND REPLACEMENT

The Contractor shall obtain any necessary tree removal permit, shall furnish and replace trees as required, and shall perform this Work in a manner conforming to all applicable provisions of said regulations or permit.

The cost of tree removal and obtaining the tree removal permits shall be included in the cost of the appropriate associated Contract Pay Item under which the Work is to be performed. The Contractor shall remove trees as required and approved by the Engineer whether or not said trees are shown on the Contract Drawings. Trees that must be removed, except for Australian pine, Brazilian pepper, punk, and other exempt species, shall be replaced as directed. Replacement trees shall be of native species at least 8-feet tall and at least 3-inch caliper diameter.

1.30 UTILITIES

Prior to construction, the Contractor shall familiarize himself with the location of all existing utilities and facilities within the Project Site. The Contractor must take the necessary precautions for the protection of any utility encountered on the Project or the restoration of any utility damaged during the work.

If excavation is required, The Contractor shall notify, at least 48 hours before breaking ground, all public or private service corporations having wire, poles, pipes, conduit, manholes, or other structures that may be affected by this operation, including all structures which are affected and not shown on these plans. Utility companies shall be contacted by calling the utility notification center "Sunshine 811" at 1-800-432-4770. Owners which are not members of the state's One Call service must be called directly. The City will furnish to the Contractor the available records of City utilities. The Contractor shall locate and mark all City utilities for his reference and for use by utility companies. The Contractor shall act as the City's agent for locating and marking City underground utilities within the Project limits, in accordance with the Florida Underground Facilities Damage Prevention and Safety Act (FS 556).

In all cases where existing utility lines may be interfered with by the work, the Contractor shall give a minimum of 48 hours' notice (excluding Saturdays, Sundays, and legal holidays) to the owners of such utilities to permit them to relocate the lines prior to construction. Existing utilities have been shown on the Contract Drawings insofar as information is reasonably available. However, it will be the Contractor's responsibility to preserve all existing utilities whether shown on the Contract Drawings or not. All maintenance, repair, and replacement of existing utilities shall be in accordance with the rules and regulations of the various utility companies having jurisdiction. All existing storm sewers, driveway drains, surface drainpipes and other property, removed or damaged during construction shall be repaired and reconnected by the Contractor as directed by the City at no additional cost to the City.

1.31 NEIGHBORHOOD NOTIFICATION

Not less than 7 days prior to the commencement of Work in the right-of-way, the Contractor shall notify all residents and businesses along the construction route with a printed door hanger notice indicating the scheduled date of construction, the type of construction, and the Contractor's and Superintendent's contact information. The door hanger text and a list of residents and businesses to

Docusign Envelope ID: AFCB16A4-B390-89EA-8013-04580053D90F

which the notification has been delivered shall be compiled and submitted to the Engineer prior to the Contractor commencing Work.

1.32 SHOP, FIELD, AND LABORATORY TESTING

The Engineer may require testing by certified personnel of certain materials to be incorporated in the Work, such as: soils density, pavement, concrete pipe and appurtenances, and welds.

In the event any such testing is required by the Engineer, a detailed description will be found in these Technical Specifications concerned with the specific item of Work.

Where reference is made for design mixes, tests of materials, or work performed, or where in the opinion of the Engineer, tests are required to ascertain compliance with the Specifications, the Contractor shall have such tests made by an approved testing laboratory. No additional payment will be made for these tests.

1.33 SALVAGED MATERIALS

The Contractor shall not proceed with demolition of existing materials or equipment without review and acceptance from the Engineer for the method of disposal.

All materials which are not returned to the City yard shall be disposed in an approved disposal site. The Engineer may request confirmation of the site's approval for disposal of the specific materials.

Salvaged materials shall be loaded on Contractor trucks and returned to the Public Services yard at 7581 Boca Ciega Drive, St. Pete Beach, Florida. The City will designate the specific location at the yard for placement of salvaged materials by the Contractor.

The following materials shall be removed and returned by the Contractor: pumps and pump rails, and all other materials as directed by the Engineer.

END OF SECTION

Docusign Envelope ID: AFCB16A4-B390-89EA-8013-04580053D90F

SECTION 2 - PAY ITEM DESCRIPTIONS

2.01 SCOPE

The scope of this section of the Contract Documents is to further define the items included in each Pay Item in the Bid Form section of the Contract Documents. Payment will be made based on the specified items included in the description in this section for each Pay Item.

All contract prices included in the Bid Form section will be full compensation for all shop drawings, working drawings, labor, materials, tools, equipment and incidentals necessary to complete the construction as shown on the Contract Drawings and/or as specified in the Contract Documents to be performed under this Contract. Actual quantities of each item bid on a unit price basis will be determined upon completion of the construction in the manner set up for each item in this section of the Specifications. Payment for all items listed in the Bid Form will constitute full compensation for all work shown and/or specified to be performed under this Contract.

2.02 ESTIMATED QUANTITIES

The quantities shown are approximate and are given only as a basis of calculation upon which the award of the Contract is to be made. The City does not assume any responsibility for the final quantities, nor shall the Contractor claim misunderstanding because of such estimate of quantities. Final payment will be made only for satisfactorily completed quantity of each item.

2.03 WORK OUTSIDE AUTHORIZED LIMITS

No payment will be made for work constructed outside the authorized limits of work.

2.04 MEASUREMENT STANDARDS

Unless otherwise specified for the particular items involved, all measurements of distance shall be taken horizontally or vertically.

2.05 AREA MEASUREMENTS

In the measurement of items to be paid for on the basis of area of finished work, the lengths and/or widths to be used in the calculations shall be the final dimensions measured along the surface of the completed work within the neat lines shown or designated.

2.06 LUMP SUM ITEMS

Where payment for items is shown to be paid for on a lump sum basis, no separate payment will be made for any item of work required to complete the lump sum items. Lump sum contracts shall be complete, tested and fully operable prior to request for final payment. Contractor may be required to provide a break-down of the lump sum totals.

Docusign Envelope ID: AFCB16A4-B390-89EA-8013-04580053D90F

2.07 PAY ITEM DESCRIPTIONS

Separate payment will be made for the items of work described herein and listed on the Bid Form. Any related work not specifically listed but required for satisfactory completion of the work shall be considered to be included in the scope of the appropriate listed work items.

No separate payment will be made for the incidental items not included in the Pay Item descriptions. The cost to complete such work shall be included in the applicable Pay Item unit cost. Final payments shall not be requested by the Contractor or made by the City until as-built (record) drawings have been submitted and approved by the City. Incidental items include, but are not limited to:

1. Shop Drawings, Working Drawings.
2. Clearing, grubbing and grading except as hereinafter specified.
3. Trench excavation, including necessary pavement removal and rock removal, except as otherwise specified.
4. Dewatering and disposal of surplus water.
5. Structural fill, backfill, and grading.
6. Replacement of unpaved roadways, and shrubbery plots.
7. Foundation and borrow materials, except as hereinafter specified.
8. Testing and placing system in operation.
9. Any material and equipment required to be installed and utilized for the tests.
10. Pipe, structures, pavement replacement, driveways and/or appurtenances included within the limits of lump sum work, unless otherwise shown.
11. Maintaining the existing quality of service during construction.
12. Appurtenant work as required for a complete and operable system.
13. Seeding and hydro mulching.
14. As-built Record Drawings, clean up, and miscellaneous work.

Docusign Envelope ID: AFCB16A4-B390-89EA-8013-04580053D90F

WASTEWATER SYSTEM MANHOLE REHABILITATION

PAY ITEM NO. 1 – MOBILIZATION

The work specified in this item consists of the preparatory work and operations in mobilizing for beginning work on the project This item includes, but is not limited to, those operations necessary for the movement of personnel, equipment, supplies and incidentals to and from the project site as a single occurrence per work site, and for the establishment of Subcontractor's temporary offices, buildings, safety equipment, first aid supplies, sanitary and other facilities, as required by these Specifications, special provisions, and State and local laws and regulations. The costs of bonds, permits and any required insurance, and any other preconstruction expense necessary for the start of the work, excluding the cost of construction materials, shall also be included in this item. Labor and equipment travel time from/to the site is included in this pay item.

The Contractor will be required to respond to the request of the Engineer or designated representative within ten (10) calendar days of notification. The Scope of Work will be developed by Project manager and will be executed in accordance with the terms and conditions of this contract.

The quantity of mobilization to be paid for under this item shall be measured as one unit each (EA) per job assignment. One (1) mobilization will be allowed for each job assignment, project, or work order no matter how many times the equipment must be relocated by loading, transporting, and unloading, or under its own power to complete the job assignment or project. Payment for mobilization shall not exceed 10 percent (10%) of the total Contract cost unless the Contractor can prove to the City that his actual mobilization cost exceeds 10 percent (10%).

PAY ITEMS NO. 2 – 14 – MAINTENANCE OF TRAFFIC

This work consists of maintaining traffic within the limits of the project for the duration of the construction period, including any temporary suspensions of the work. All Maintenance of Traffic (MOT) shall comply with FDOT Standard Plans Index 102 Series for Maintenance of Traffic. These pay items shall include labor and equipment to furnishing, installing and maintaining of traffic control and safety devices during construction; the construction and maintenance of any necessary detour facilities; providing necessary facilities for access to residences, businesses, pedestrian, schools, etc., control of dust and any other special requirements for safe and expeditious movement of traffic as may be called for on the plans. MOT shall include all of such facilities, devices and operations as are required for the safety and convenience of the public, as well as for minimizing public nuisance. The Contractor, however, shall not obstruct nor create a hazard to any traffic during the performance of the work and shall be responsible for repair of any damage to existing pavement or facilities caused by his operations. Traffic Control Devices include all types of barricades, arrow boards, signs, temporary pavement markers, lights, concrete barriers and permanent striping. All travel, equipment, labor overhead or any other associated expenses in transportation and setting out the MOT will be included in the price. All MOT line items for Multi-Lane work shall include all costs for items associated with the appropriate FDOT

Docusign Envelope ID: AFCB16A4-B390-89EA-8013-04580053D90F

Index (no separate payment for signs, barricades, etc. included with index will be allowed).

Maintenance of Traffic (MOT) shall be measured as units of work, each/day (EA/DY), hourly (HR) or by linear foot (LF) accordingly completed and priced on an individual project basis. The lump sum price for each assignment will be based on the specific MOT requirements for the assignment. The Contractor shall provide the Engineer with a proposal for the MOT that includes a breakdown of the costs, which are included in the lump sum price, and receive written acceptance from the Engineer prior to the installation of the MOT.

PAY ITEM	DESCRIPTION	UNITS
2	Flagmen (Per-Flagmen)	HR
3	Multi Lane, Lane Closures (FDOT Index No. 613)	EA/DY
4	Multi Lane, Intersection (FDOT Index No. 615)	EA/DY
5	Arrow Boards - 5' Minimum Horizontal Size	EA/DY
6	Variable Message Board	EA/DY
7	Concrete Barrier (FDOT Index No. 100)	EA/DY
8	Low Profile Barrier (FDOT Index No. 120)	EA/DY
9	Signs in Work Zones	EA/DY
10	6" Solid line Thermo Plastic - Permanent	LF
11	24" Stop Bar, Solid, Thermo Plastic, Perm.	LF
12	6" Skip line (6'-10' Skip) Thermo Plastic-Perm.	LF
13	Barricades Type III, with Warning Lights	EA/DY
14	Barricades Type I or II, with Warning Lights	EA/DY

PAY ITEM NO. 15 – REPAIR MANHOLE BENCH AND CHANNEL

Payment will be made per each manhole regardless of manhole diameter or depth. Payment shall include all materials, labor, equipment, and supplies necessary for the Repair of Manhole Bench and Channel, and specifically includes, but is not limited to, placement of temporary plugs, removal and disposal of all sand, rubble, deposits, and other accumulated debris, removal of deficient, deteriorated or unsound bench and channel materials, minor infiltration elimination in walls and base beneath the bench and channel, repair or replacement of bench and channels, cleaning, disposal of debris, restoration, and all other appurtenant work.

Separate Pay Items are provided for Traffic Control, Pump-Around Pumping Operation, and "Severe" Manhole Infiltration Elimination used in conjunction with this Work.

PAY ITEMS NO. 16 & 17 – REPAIR CHIMNEY, ADJUST/REPLACE MH CASTING

Payment will be made per each manhole regardless of manhole casting diameter or depth. Payment shall include all materials, labor, equipment, and supplies necessary for repair of chimney, and adjustment or replacement of manhole casting, and specifically includes, but is not limited to, locating and uncovering manhole, excavation, saw cutting, removal and disposal of existing asphalt pavement as needed, removal of existing manhole frame and cover casting, removal of deficient, deteriorated or unsound chimney materials, minor infiltration elimination, repair or replacement of chimney, reinstalling the existing manhole casting, delivering and

Docusign Envelope ID: AFCB16A4-B390-89EA-8013-04580053D90F

installing a new manhole casting of the same nominal size as the existing casting, backfill, restoration of surface to match existing conditions, cleaning, disposal of debris, and all other appurtenant work. Compensation for the Contractor to furnish new manhole castings will be made under separate Pay Items. The City may elect to furnish new manhole castings for the Contractor to install. The cost of City furnished manhole castings will be deducted from the Contract Price.

PAY ITEM	DESCRIPTION	UNITS
16	Repair Chimney, Asjust/Replace MH Casting - Unpaved	EA
17	Repair Chimney, Asjust/Replace MH Casting - Asphalt Pavement	EA

PAY ITEM NO. 18 – REBUILD CORBEL/CHIMNEY FOR TYPE B MANHOLE CASTING

Payment will be made per each manhole regardless of manhole casting diameter or depth. Payment shall include all materials, labor, equipment, and supplies necessary to rebuild and enlarge corbel/chimney for Type B manhole casting, and specifically includes, but is not limited to, additional pavement removal and excavation, removal of chimney/corbel materials and rebuilding chimney to match larger Type B manhole casting diameter, additional backfill, additional surface restoration, disposal of additional debris, and all other appurtenant work. This Pay Item is applicable only in conjunction with, and in addition to, the Work as listed under Pay Items 16 and 17.

PAY ITEMS NO. 19 & 20 – FURNISH MANHOLE CASTING

Payment will be made per each manhole casting for the applicable casting types listed in the Proposal. Payment shall include all materials, labor, equipment, and supplies necessary to furnish Type B manhole castings (nominal 34-inch diameter) or Type E manhole castings (nominal 23-inch diameter), and specifically includes, but is not limited to, purchasing and delivering the manhole casting materials to designated Work locations for use to replace existing manhole castings.

PAY ITEM	DESCRIPTION	UNITS
19	Furnish Manhole Casting – Type B	EA
20	Furnish Manhole Casting – Type E	EA

PAY ITEM NO. 21 – SEVERE MANHOLE INFILTRATION ELIMINATION

Payment will be made per each manhole regardless of the manhole diameter, depth, or the number of infiltration points sealed in each manhole. Payment shall include all materials, labor, equipment, and supplies necessary, and specifically includes, but is not limited to, surface preparation, drilling of grout holes into or through the manhole wall and floor, grout pipe penetrations, grout injection, removal of grout pipe and sealing grout holes, testing, restoration, and all other appurtenant work as specified.

Docusign Envelope ID: AFCB16A4-B390-89EA-8013-04580053D90F

PAY ITEM NO. 22 – CHEMICAL SEALING - GROUT

Payment will be made per gallon. This Pay item is applicable only in conjunction with Pay Item No. 21. Payment shall include all materials, equipment and labor for chemically sealing excessive infiltration defects for "Severe" Manhole Infiltration Elimination prior to manhole repairs.

PAY ITEMS NO. 23 & 24 – INTERNAL CHIMNEY SEALANT

Payment will be made per each manhole for the applicable manhole casting types listed in the Bid Form. Payment shall include all materials, labor, equipment, and supplies necessary for the installation of the internal chimney sealant for Type B manhole castings (nominal 34-inch diameter) or Type E manhole castings (nominal 23-inch diameter), and specifically includes, but is not limited to, cleaning, surface preparation, "Minor" infiltration elimination, applying the chimney sealant, testing, restoration, and all other appurtenant work.

PAY ITEM	DESCRIPTION	UNITS
23	Internal Chimney Sealant – Type B Manhole Casting	EA
24	Internal Chimney Sealant – Type E Manhole Casting	EA

PAY ITEM NO. 25 – ADDITIONAL ACCESS COST FOR MANHOLE COATING

Payment will be made per each Work location. A Work location shall be limited to the additional access costs for manhole coating Work to be performed on single or multiple proximate access structures or manholes regardless of the number of manholes coated. Measurement will be for a manhole coating installation where the manhole(s) is not readily accessible by standard equipment, e.g., when located in rear easements. Payment shall include all additional labor, equipment, materials and supplies to complete the manhole coating installation in locations with limited access.

PAY ITEMS NO. 26 – 33 – BYPASS PUMPING SETUP & OPERATION

This item provides for set up and operation of by-pass sewage pumping equipment and temporary piping as required and as described in the Standard Technical Specifications. This Pay Item is applicable on projects or repairs that have high flow or require an over night by pass operation.

The quantity to be measured for payment under this Pay Item will be the actual number of by-pass pumping set ups and operations, per part of day, required by the Engineer in the work. The minimum measurement for this pay item is eight (8) hours or 0.333 days and is measured from the time that the sewage is actually by-passed. This eight (8) hour minimum (0.333 days) includes full compensation for set up and operation for up to the first eight (8) hour period. Additional time will be in tenths of the day or twenty-four (24) hour period. The quantities determined shall be paid per day (DAY) or portion of day of by-pass pumping set up and operation.

PAY ITEM	DESCRIPTION	UNITS
26	Bypass Pumping, Set up, 6" - 10" diameter	EA
27	Bypass Pumping, Set up, 12" - 14" diameter	EA

Docusign Envelope ID: AFCB16A4-B390-89EA-8013-04580053D90F

28	Bypass Pumping, Set up, 15" - 21" diameter	EA
29	Bypass Pumping, Set up, 24" diameter	EA
30	Bypass Pumping, Operation, 6" - 10" diameter	DAY
31	Bypass Pumping, Operation, 12" - 14" diameter	DAY
32	Bypass Pumping, Operation, 15" - 21" diameter	DAY
33	Bypass Pumping, Operation, 24" diameter	DAY

PAY ITEMS NO. 34-36 – PURE CALCIUM ALUMINATE CEMENTITIOUS MH COATING, INITIAL

Payment will be made per each manhole for the applicable manhole diameters listed below, regardless of the overall manhole depth. Measurement will be from the bottom of the manhole to at least 3 vertical feet above the lowest pipe invert, or to the bottom of the cover frame if less than 3 vertical feet, and will be the average of minimum/maximum manhole diameter measured 12-inches above outgoing pipe rounded to the nearest foot. Payment shall include all materials, labor, equipment, and supplies necessary for installation, and specifically includes, but is not limited to, temporary plugs, cleaning, removal and disposal of all sand, rubble, deposits, and other accumulated debris, removal of steps, surface preparation, "Minor" infiltration elimination, sealing of all manhole wall penetrations, coating the lower 3 vertical feet of the manhole (includes invert, channel, bench, piping, CIPP liner interface, wall, and cone/corbel/chimney as applicable), testing, restoration, and all other appurtenant work as specified.

Separate Pay Items are provided for Maintenance of Traffic, Bypass Pumping Operation, and "Severe" Manhole Infiltration Elimination used in conjunction with this Work.

PAY ITEM	DESCRIPTION	UNITS
34	Pure Calcium Aluminate Cementitious MH Coating – 48” Diameter, Initial	EA
35	Pure Calcium Aluminate Cementitious MH Coating – 60” Diameter, Initial	EA
36	Pure Calcium Aluminate Cementitious MH Coating – 72” Diameter, Initial	EA

PAY ITEMS NO. 37-39 – PURE CALCIUM ALUMINATE CEMENTITIOUS MH COATING, ADDITIONAL

Payment will be made per vertical foot for the applicable manhole diameters listed below, regardless of the overall manhole depth. Measurement will be from the lowest pipe invert to the bottom of the cover frame minus the 3 vertical feet paid for under Pay Items 34 through 36. This Pay Item is applicable only in conjunction with, and includes the same Work as listed in Pay Items 34 through 36.

PAY ITEM	DESCRIPTION	UNITS
37	Pure Calcium Aluminate Cementitious MH Coating – 48” Diameter, Additional	VF
38	Pure Calcium Aluminate Cementitious MH Coating –	VF

Docusign Envelope ID: AFCB16A4-B390-89EA-8013-04580053D90F

	60” Diameter, Additional	
39	Pure Calcium Aluminate Cementitious MH Coating – 72” Diameter, Additional	VF

PAY ITEMS NO. 40-42 – REINFORCED POLYMER MH COATING, INITIAL

Payment will be made per each manhole for the applicable manhole diameters listed below, regardless of the overall manhole depth. Measurement will be from the bottom of the manhole to at least 3 vertical feet above the lowest pipe invert, or to the bottom of the cover frame if less than 3 vertical feet, and will be the average of minimum/maximum manhole diameter measured 12-inches above outgoing pipe rounded to the nearest foot. Payment shall include all materials, labor, equipment, and supplies necessary for installation, and specifically includes, but is not limited to, temporary plugs, cleaning, removal and disposal of all sand, rubble, deposits, and other accumulated debris, removal of steps, surface preparation, "Minor" infiltration elimination, sealing of all manhole wall penetrations, coating the lower 3 vertical feet of the manhole (includes invert, channel, bench, piping, CIPP liner interface, wall, and cone/corbel/chimney as applicable), testing, restoration, and all other appurtenant work as specified.

Separate Pay Items are provided for Maintenance of Traffic, Bypass Pumping Operation, and "Severe" Manhole Infiltration Elimination used in conjunction with this Work.

PAY ITEM	DESCRIPTION	UNITS
40	Reinforced Polymer MH Coating – 48” Diameter, Initial	EA
41	Reinforced Polymer MH Coating – 60” Diameter, Initial	EA
42	Reinforced Polymer MH Coating – 72” Diameter, Initial	EA

PAY ITEMS NO. 43-45 – REINFORCED POLYMER MH COATING, ADDITIONAL

Payment will be made per vertical foot for the applicable manhole diameters listed below, regardless of the overall manhole depth. Measurement will be from the lowest pipe invert to the bottom of the cover frame minus the 3 vertical feet paid for under Pay Items 40 through 42. This Pay Item is applicable only in conjunction with, and includes the same Work as listed in Pay Items 40 through 42.

PAY ITEM	DESCRIPTION	UNITS
43	Polymer MH Coating – 48” Diameter, Additional	VF
44	Polymer MH Coating – 60” Diameter, Additional	VF
45	Polymer MH Coating – 72” Diameter, Additional	VF

PAY ITEMS NO. 46-48 – CONCRETE CURB REPLACEMENT

Payment for all work included in this Pay Item will be made at the applicable Contract unit price bid per linear foot for removal of existing curbing and for furnishing and placing curb and gutter as shown on the Contract Drawings and listed on the Bid Form. Measurement will be per actual number of linear feet of curbing installed. Payment shall represent full compensation for removal of existing curb and all labor, material and equipment for compacting subgrade, forming,

Docusign Envelope ID: AFCB16A4-B390-89EA-8013-04580053D90F

furnishing, placing the concrete, and finishing as specified and all incidentals necessary for completion of this Pay Item.

PAY ITEM	DESCRIPTION	UNITS
46	Concrete Curb Replacement – Type D	LF
47	Concrete Curb Replacement – Type F	LF
48	Concrete Curb Replacement – Miami Curb	LF

PAY ITEMS NO. 49 & 50 – CONCRETE SIDEWALK REPLACEMENT

Payment will be made per square yard for the applicable sidewalk thickness listed below, regardless of the overall length. Measurement will be for complete sections. Payment shall include all materials, labor, equipment, and supplies necessary for concrete sidewalk replacement, and specifically includes, but is not limited to, excavation, saw cutting and removal of existing sidewalk, installation of replacement sidewalk to match cross section and slope of adjacent sidewalk, expansion joint material, contraction joints, backfill, restoration, cleaning, disposal of debris, and all other appurtenant work as specified.

PAY ITEM	DESCRIPTION	UNITS
49	Concrete Sidewalk Replacement – 4” Thick	SY
50	Concrete Sidewalk Replacement – 6” Thick	SY

PAY ITEMS NO. 51 & 52 – CONCRETE DRIVEWAY REPLACEMENT

Payment will be made per square yard for the applicable driveway thickness listed below, regardless of the overall length. Measurement will be for complete section. Payment shall include all materials, labor, equipment, and supplies necessary for concrete driveway replacement, and specifically includes, but is not limited to, excavation, saw cutting and removal of existing driveway, installation of replacement driveway to match cross section and slope of existing driveway, expansion joint material, contraction joints, backfill, restoration, cleaning, disposal of debris, and all other appurtenant work as specified.

PAY ITEM	DESCRIPTION	UNITS
51	Concrete Driveway Replacement – 4” Thick	SY
52	Concrete Driveway Replacement – 6” Thick	SY

PAY ITEM NO. 53 – INFLOW DISH

Payment for all work included under this Pay Item will be made at the Contract unit price bid for furnishing and installing each inflow dish as shown on the Contract Drawings and listed on the Bid Form. Payment will be made for each inflow dish installed and will represent full compensation for all labor, material, excavation, including rock, bedding, backfill, compaction, sheeting, testing and equipment required to complete this Pay Item. Included in this Pay Item, but not limited to, are all 304 stainless steel inflow dishes, as shown in the Contract Drawings. Submittal shall include a complete bill of materials for all equipment, showing dimensions and materials of construction of

Docusign Envelope ID: AFCB16A4-B390-89EA-8013-04580053D90F

all components, verifying that product will meet the standards specified in the Technical Specifications and Contract Drawings.

Docusign Envelope ID: AFCB16A4-B390-89EA-8013-04580053D90F

WASTEWATER SYSTEM PIPE LINING

PAY ITEM NO. 1 – MOBILIZATION

The work specified in this item consists of the preparatory work and operations in mobilizing for beginning work on the project This item includes, but is not limited to, those operations necessary for the movement of personnel, equipment, supplies and incidentals to and from the project site as a single occurrence per work site, and for the establishment of Subcontractor's temporary offices, buildings, safety equipment, first aid supplies, sanitary and other facilities, as required by these Specifications, special provisions, and State and local laws and regulations. The costs of bonds, permits and any required insurance, and any other preconstruction expense necessary for the start of the work, excluding the cost of construction materials, shall also be included in this item. Labor and equipment travel time from/to the site is included in this pay item.

The Contractor will be required to respond to the request of the Engineer, or designated representative within ten (10) calendar days of notification. The Scope of Work will be developed by Project manager and will be executed in accordance with the terms and conditions of this contract.

The quantity of mobilization to be paid for under this item shall be measured as one unit each (EA) per job assignment. One (1) mobilization will be allowed for each job assignment, project, or work order no matter how many times the equipment must be relocated by loading, transporting and unloading, or under its own power to complete the job assignment or project. Payment for mobilization shall not exceed 10 percent (10%) of the total Contract cost unless the Contractor can prove to the City that his actual mobilization cost exceeds 10 percent (10%).

PAY ITEMS NO. 2 – 14 – MAINTENANCE OF TRAFFIC

This work consists of maintaining traffic within the limits of the project for the duration of the construction period, including any temporary suspensions of the work. All Maintenance of Traffic (MOT) shall comply with FDOT Standard Plans Index 102 Series for Maintenance of Traffic. These pay items shall include labor and equipment to furnishing, installing and maintaining of traffic control and safety devices during construction; the construction and maintenance of any necessary detour facilities; providing necessary facilities for access to residences, businesses, pedestrian, schools, etc., control of dust and any other special requirements for safe and expeditious movement of traffic as may be called for on the plans. MOT shall include all of such facilities, devices and operations as are required for the safety and convenience of the public, as well as for minimizing public nuisance. The Contractor, however, shall not obstruct nor create a hazard to any traffic during the performance of the work and shall be responsible for repair of any damage to existing pavement or facilities caused by his operations. Traffic Control Devices include all types of barricades, arrow boards, signs, temporary pavement markers, lights, concrete barriers and permanent striping. All travel, equipment, labor overhead or any other associated expenses in transportation and setting out the MOT will be included in the price. All MOT line items for Multi-Lane work shall include all costs for items associated with the appropriate FDOT Index (no separate payment for signs, barricades, etc. included with index will be allowed).

Docusign Envelope ID: AFCB16A4-B390-89EA-8013-04580053D90F

Maintenance of Traffic (MOT) shall be measured as units of work, each/day (EA/DY), hourly (HR) or by linear foot (LF) accordingly completed and priced on an individual project basis. The lump sum price for each assignment will be based on the specific MOT requirements for the assignment. The Contractor shall provide the Engineer with a proposal for the MOT that includes a breakdown of the costs, which are included in the lump sum price, and receive written acceptance from the Engineer prior to the installation of the MOT.

PAY ITEM	DESCRIPTION	UNITS
2	Flagmen (Per-Flagmen)	HR
3	Multi Lane, Lane Closures (FDOT Index No. 613)	EA/DY
4	Multi Lane, Intersection (FDOT Index No. 615)	EA/DY
5	Arrow Boards - 5' Minimum Horizontal Size	EA/DY
6	Variable Message Board	EA/DY
7	Concrete Barrier (FDOT Index No. 100)	EA/DY
8	Low Profile Barrier (FDOT Index No. 120)	EA/DY
9	Signs in Work Zones	EA/DY
10	6" Solid line Thermo Plastic - Permanent	LF
11	24" Stop Bar, Solid, Thermo Plastic, Perm.	LF
12	6" Skip line (6'-10' Skip) Thermo Plastic-Perm.	LF
13	Barricades Type III, with Warning Lights	EA/DY
14	Barricades Type I or II, with Warning Lights	EA/DY

PAY ITEMS NO. 15 – 22 – CIPP MAIN LINER

Payment will be made per linear foot for the applicable pipe diameters and minimum thicknesses listed below, regardless of the depth or overall length. Measurement will be from the upstream manhole to the downstream manhole centerlines. Payment shall include all materials, labor, equipment, and supplies necessary for the CIPP Main Liner installation, and specifically includes, but is not limited to, pre-rehabilitation CCTV inspection, liner sampling and storage of samples for testing, sealing liner connections at manholes, matching existing manhole lining to the CIPP liner, matching existing flow channels and surfacing to the liner to minimize turbulence, cleaning, removal and disposal of all sand, rubble, deposits, and other accumulated debris after liner installation, post-rehabilitation CCTV inspection video and log, restoration, and all other appurtenant work as specified.

PAY ITEM	DESCRIPTION	UNITS
15	CIPP Main Liner 6” Diameter – 6.0 mm Thickness	LF
16	CIPP Main Liner 8” Diameter – 6.0 mm Thickness	LF
17	CIPP Main Liner 10” Diameter – 6.0 mm Thickness	LF
18	CIPP Main Liner 12” Diameter – 6.0 mm Thickness	LF
19	CIPP Main Liner 15” Diameter – 7.5 mm Thickness	LF
20	CIPP Main Liner 18” Diameter – 9.0 mm Thickness	LF
21	CIPP Main Liner 21” Diameter – 9.0 mm Thickness	LF
22	CIPP Main Liner 24” Diameter – 10.5 mm Thickness	LF

Docusign Envelope ID: AFCB16A4-B390-89EA-8013-04580053D90F

PAY ITEMS NO. 23 – 30 – CIPP MAIN LINER THICKNESS VARIANCE

Payment for CI PP Main Liner Thickness Variance will be made per linear foot for the applicable pipe diameters listed in the Proposal, regardless of depth or overall length. Liner thickness may be varied due to field conditions requiring a change in the specified minimum thickness. The per linear foot price for CIPP Main Liner Thickness Variance will be added to, or deducted from, the per linear foot price of the Main Liner for the applicable pipe diameter listed in the Bid Form (Pay Items 15 through 22). The Main Liner per linear foot price will be adjusted for each 1.5 mm thickness variance increment. Liner thickness shall be in accordance with Technical Specification Section headed "Cured-In-Place-Pipe (CIPP) " unless otherwise approved by the Engineer in writing.

PAY ITEM	DESCRIPTION	UNITS
23	CIPP Main Liner 6” Diameter – Thickness Variance + 1.5 mm	LF
24	CIPP Main Liner 8” Diameter – Thickness Variance + 1.5 mm	LF
25	CIPP Main Liner 10” Diameter – Thickness Variance + 1.5 mm	LF
26	CIPP Main Liner 12” Diameter – Thickness Variance + 1.5 mm	LF
27	CIPP Main Liner 15” Diameter – Thickness Variance + 1.5 mm	LF
28	CIPP Main Liner 18” Diameter – Thickness Variance + 1.5 mm	LF
29	CIPP Main Liner 21” Diameter – Thickness Variance + 1.5 mm	LF
30	CIPP Main Liner 24” Diameter – Thickness Variance + 1.5 mm	LF

PAY ITEMS NO. 31 – 38 – BYPASS PUMPING SETUP & OPERATION

This item provides for set up and operation of by-pass sewage pumping equipment and temporary piping as required and as described in the Standard Technical Specifications. This Pay Item is applicable on projects or repairs that have high flow or require an over night by pass operation.

The quantity to be measured for payment under this Pay Item will be the actual number of by-pass pumping set ups and operations, per part of day, required by the Engineer in the work. The minimum measurement for this pay item is eight (8) hours or 0.333 days and is measured from the time that the sewage is actually by-passed. This eight (8) hour minimum (0.333 days) includes full compensation for set up and operation for up to the first eight (8) hour period. Additional time will be in tenths of the day or twenty-four (24) hour period. The quantities determined shall be paid per day (DAY) or portion of day of by-pass pumping set up and operation.

Docusign Envelope ID: AFCB16A4-B390-89EA-8013-04580053D90F

PAY ITEM	DESCRIPTION	UNITS
31	Bypass Pumping, Set up, 6" - 10" diameter	EA
32	Bypass Pumping, Set up, 12" - 14" diameter	EA
33	Bypass Pumping, Set up, 15" - 21" diameter	EA
34	Bypass Pumping, Set up, 24" diameter	EA
35	Bypass Pumping, Operation, 6" - 10" diameter	DAY
36	Bypass Pumping, Operation, 12" - 14" diameter	DAY
37	Bypass Pumping, Operation, 15" - 21" diameter	DAY
38	Bypass Pumping, Operation, 24" diameter	DAY

PAY ITEMS NO. 39-42 – NORMAL CLEANING

Payment for Normal Cleaning will be made per linear foot for the applicable pipe diameters listed in the Bid Form, regardless of depth or overall length. Measurement will be from the upstream manhole to the downstream manhole centerlines and based on the average debris depth. Payment shall include all materials, labor, equipment, and supplies necessary for Normal Cleaning, and specifically includes, but is not limited to, the complete removal and disposal of all accumulated debris within the pipe including sludge, dirt, rocks, sand, rubble, and other materials and obstructions, restoration, and all other appurtenant work as specified. Separate Pay Items are provided for Specialty Cleaning.

PAY ITEM	DESCRIPTION	UNITS
39	Normal Cleaning – 6” and 8” Diameter	LF
40	Normal Cleaning – 10” and 12” Diameter	LF
41	Normal Cleaning – 15” and 18” Diameter	LF
42	Normal Cleaning – 21” and 24” Diameter	LF

PAY ITEMS NO. 43-46 – SPECIALTY CLEANING

Payment will be made per linear foot for the applicable pipe diameters listed in the Bid Form, regardless of depth or overall length. Measurement will be based on a minimum of 50 linear feet of pipe, or the actual length of the Specialty Cleaning performed, but not necessarily for the entire pipe segment length. Specialty Cleaning of only joints within a pipe segment, or portion thereof, shall count as 2.5 feet of equivalent pipe length (For Example: 400 feet of 8" pipe with 5 ft joints, clean all joints =80 joints x 2.5 ft =200 feet of specialty cleaning). Equivalent joint length shall not be counted in addition to the length of a pipe segment, or portion thereof, where continuous Specialty Cleaning has been performed. Payment shall include all materials, labor, equipment, and supplies necessary for Specialty Cleaning of wastewater pipe, and specifically includes, but is not limited to, the complete removal and disposal of all accumulated debris within the pipe including grease, roots, joint sealant, tuberculation, and other adherent deposits through the use of special equipment, restoration, and all other appurtenant work as specified. Specialty Cleaning is in addition to Normal Cleaning as described in Pay Items 39 through 42.

PAY ITEM	DESCRIPTION	UNITS
43	Normal Cleaning – 6” and 8” Diameter	LF
44	Normal Cleaning – 10” and 12” Diameter	LF

Docusign Envelope ID: AFCB16A4-B390-89EA-8013-04580053D90F

45	Normal Cleaning – 15” and 18” Diameter	LF
46	Normal Cleaning – 21” and 24” Diameter	LF

PAY ITEMS NO. 47-49 – CHEMICAL SEALING OF HOST PIPE

Payment will be made per each host pipe for the applicable pipe diameters listed in the Bid Form, regardless of depth, overall length, or the number of infiltration points sealed. Measurement will be for a host pipe between manholes. Payment shall include all materials, labor, equipment and supplies necessary for the Chemical Sealing of Host Pipe, and specifically includes, but is not limited to, sealing excessive infiltration at pipe joints and other defects, disposal of debris, post-rehabilitation CCTV inspection video and log, restoration, and all other appurtenant work as specified. A separate Pay Item is provided Chemical Sealing - Grout material.

PAY ITEM	DESCRIPTION	UNITS
47	Chemical Sealing of Host Pipe – 10” Diameter and Less	EA
48	Chemical Sealing of Host Pipe – 12” and 15” Diameter	EA
49	Chemical Sealing of Host Pipe – 18” to 24” Diameter	EA

PAY ITEM NO. 50 – CHEMICAL SEALING - GROUT

Payment will be made per gallon. This Pay item is applicable only in conjunction with Pay Items 47 through 49. Payment shall include all materials, equipment and labor for chemically sealing excessive infiltration at pipe joints and other defects at specified locations for Chemical Sealing of Host Pipe prior to CIPP liner installation.

PAY ITEM NO. 51 – REMOVAL & SEALING OF PROTRUDING SERVICE CONNECTIONS

Payment will be made per each service regardless of the connection diameter or main pipe diameter. Payment shall include all materials, labor, equipment and supplies necessary for the Removal & Sealing of Protruding Connections, and specifically includes, but is not limited to, removing protruding lateral by internal cutting or other remote methods, grouting the main/lateral connection, disposal of debris, post-rehabilitation CCTV inspection video and log, restoration, and all other appurtenant work as specified.

PAY ITEM NO. 52 – ADDITIONAL ACCESS COST MAIN LINER

Payment for Additional Access Cost Main Liner will be made per each access. Measurement will be for a liner installation where both the upstream and downstream manhole are not readily accessible by standard equipment, e.g., when located in rear easements. Payment shall include all additional labor, equipment, materials and supplies to complete the CIPP Main Liner installation in locations with limited access. The Contractor shall attempt to schedule and stage the Work to permit the lining of multiple, contiguous pipe segments from an accessible manhole where feasible.

Docusign Envelope ID: AFCB16A4-B390-89EA-8013-04580053D90F

PAY ITEM NO. 53 – SERVICE RECONNECTION

Payment will be made per each service regardless of the connection diameter or host pipe diameter, and regardless of depth or overall length of the host pipe. Payment shall include all materials, labor, equipment, and supplies necessary for the service reconnection, and specifically includes, but is not limited to, reconnecting service lateral by internal cutting or other remote methods, grouting the annular space between the liner and host pipe at the lateral connection and the first 18-inches of the service lateral, post-rehabilitation CCTV inspection video and log, disposal of debris, restoration, and all other appurtenant work as specified. No additional payment will be made for service reconnections made by excavation.

PAY ITEM NO. 54 – CIPP LINER TESTING

Payment will be made per each test. Measurement will be for a set of tests completed for a liner installation and accepted by the Engineer. Payment shall include all materials, labor, equipment, supplies, and expenses necessary for CIPP Liner Testing, and specifically includes, but is not limited to, preparing samples, laboratory testing, submitting the results to the Engineer, and all other appurtenant work as specified. The cost to obtain and store samples for testing, and any retesting of samples is not included in this Pay Item.

Docusign Envelope ID: AFCB16A4-B390-89EA-8013-04580053D90F

WASTEWATER SYSTEM POINT REPAIRS

PAY ITEM NO. 1 – MOBILIZATION FOR ROUTINE RESPONSE

The work specified in this item consists of the preparatory work and operations in mobilizing for beginning work on the project This item includes, but is not limited to, those operations necessary for the movement of personnel, equipment, supplies and incidentals to and from the project site as a single occurrence per work site, and for the establishment of Subcontractor's temporary offices, buildings, safety equipment, first aid supplies, sanitary and other facilities, as required by these Specifications, special provisions, and State and local laws and regulations. The costs of bonds, permits and any required insurance, and any other preconstruction expense necessary for the start of the work, excluding the cost of construction materials, shall also be included in this item. Labor and equipment travel time from/to the site is included in this pay item.

For routine work, as identified by the Engineer or his designee, the Contractor will be required to respond to the request of the Engineer, or designated representative within ten (10) calendar days of notification. The Scope of Work will be developed by Project manager and will be executed in accordance with the terms and conditions of this contract.

The quantity of mobilization to be paid for under this item shall be measured as one unit each (EA) per job assignment. One (1) mobilization will be allowed for each job assignment, project, or work order no matter how many times the equipment must be relocated by loading, transporting and unloading, or under its own power to complete the job assignment or project.

PAY ITEM NO. 2 – MOBILIZATION FOR EMERGENCY RESPONSE

The work specified in this item consists of the preparatory work and operations in mobilizing for beginning work on the project This item includes, but is not limited to, those operations necessary for the movement of personnel, equipment, supplies and incidentals to and from the project site as a single occurrence per work site, and for the establishment of Subcontractor's temporary offices, buildings, safety equipment, first aid supplies, sanitary and other facilities, as required by these Specifications, special provisions, and State and local laws and regulations. The costs of bonds, permits and any required insurance, and any other preconstruction expense necessary for the start of the work, excluding the cost of construction materials, shall also be included in this item. Labor and equipment travel time from/to the site is included in this pay item.

For emergency work, as identified by the Engineer or his designee, the Contractor will be required to respond to the request of the Engineer, or designated representative within ten (10) calendar days of notification. The Scope of Work will be developed by Project manager and will be executed in accordance with the terms and conditions of this contract.

The quantity of mobilization to be paid for under this item shall be measured as one unit each (EA) per job assignment. One (1) mobilization will be allowed for each job assignment, project, or work order no matter how many times the equipment must be relocated by loading, transporting and unloading, or under its own power to complete the job assignment or project.

Docusign Envelope ID: AFCB16A4-B390-89EA-8013-04580053D90F

PAY ITEMS NO. 3 – 15 – MAINTENANCE OF TRAFFIC

This work consists of maintaining traffic within the limits of the project for the duration of the construction period, including any temporary suspensions of the work. All Maintenance of Traffic (MOT) shall comply with FDOT Standard Plans Index 102 Series for Maintenance of Traffic. These pay items shall include labor and equipment to furnishing, installing and maintaining of traffic control and safety devices during construction; the construction and maintenance of any necessary detour facilities; providing necessary facilities for access to residences, businesses, pedestrian, schools, etc., control of dust and any other special requirements for safe and expeditious movement of traffic as may be called for on the plans. MOT shall include all of such facilities, devices and operations as are required for the safety and convenience of the public, as well as for minimizing public nuisance. The Contractor, however, shall not obstruct nor create a hazard to any traffic during the performance of the work and shall be responsible for repair of any damage to existing pavement or facilities caused by his operations. Traffic Control Devices include all types of barricades, arrow boards, signs, temporary pavement markers, lights, concrete barriers and permanent striping. All travel, equipment, labor overhead or any other associated expenses in transportation and setting out the MOT will be included in the price. All MOT line items for Multi-Lane work shall include all costs for items associated with the appropriate FDOT Index (no separate payment for signs, barricades, etc. included with index will be allowed).

Maintenance of Traffic (MOT) shall be measured as units of work, each/day (EA/DY), hourly (HR) or by linear foot (LF) accordingly completed and priced on an individual project basis. The lump sum price for each assignment will be based on the specific MOT requirements for the assignment. The Contractor shall provide the Engineer with a proposal for the MOT that includes a breakdown of the costs, which are included in the lump sum price, and receive written acceptance from the Engineer prior to the installation of the MOT.

PAY ITEM	DESCRIPTION	UNITS
3	Flagmen (Per-Flagmen)	HR
4	Multi Lane, Lane Closures (FDOT Index No. 613)	EA/DY
5	Multi Lane, Intersection (FDOT Index No. 615)	EA/DY
6	Arrow Boards - 5' Minimum Horizontal Size	EA/DY
7	Variable Message Board	EA/DY
8	Concrete Barrier (FDOT Index No. 100)	EA/DY
9	Low Profile Barrier (FDOT Index No. 120)	EA/DY
10	Signs in Work Zones	EA/DY
11	6" Solid line Thermo Plastic - Permanent	LF
12	24" Stop Bar, Solid, Thermo Plastic, Perm.	LF
13	6" Skip line (6'-10' Skip) Thermo Plastic-Perm.	LF
14	Barricades Type III, with Warning Lights	EA/DY
15	Barricades Type I or II, with Warning Lights	EA/DY

PAY ITEM NO. 16 – AS-BUILT SURVEY

Payment for all work included, but is not limited to, under this Pay Item shall represent full

Docusign Envelope ID: AFCB16A4-B390-89EA-8013-04580053D90F

compensation in accordance with the lump sum price bid for as-built record drawings or any other required certifications to put the proposed system in service. All items are subject to approval by the Engineer.

The quantity to be paid for under this pay item shall per as-built survey completed by a professional surveyor based on the linear foot of sewer main installed.

PAY ITEM NO. 17 – EXCAVATION, UNSUITABLE MATERIAL

The work specified in this item describes the removal of soil unsuitable for a proper foundation, encountered at trench grade. The unsuitable soil shall be removed and disposed of the full width of the trench and to the depth required by the Engineer and replaced with approved bedding material. The backfill shall be thoroughly compacted and shaped to form the pipe bed.

The quantity to be paid for under this Item shall be the volume in cubic yards (CY), computed by the average end area method, of the unsuitable material removed within the limits of depth shown on the Plans or as directed by the Engineer or his representative.

PAY ITEMS NO. 18 & 19 – SHEETING AND BRACING, ADDITIONAL

The quantities to be paid for under this item shall be the number of square feet of sheeting installed in addition to 6’ of depth. The quantities to be paid for under this item shall be based on the square feet of sheeting installed and accepted.

PAY ITEM	DESCRIPTION	UNITS
18	Sheeting & Bracing (Left in Place)	SF
19	Sheeting & Bracing, Pipe Trenches (Removed)	SF

PAY ITEMS NO. 20 - 25 – WELL POINT DEWATERING INITIAL

Measurement and payment of this pay item is based on the set up of dewatering equipment as required by the Contractor and allowed or directed by the Engineer to perform contracted work in accordance with the Technical Specifications. The work shall include all labor, equipment and materials, testing, and any required incidentals necessary to completely install, monitor and operate the dewatering system including the placement of up to twenty (20) well points to the various depths listed in the proposal per job assignment. The dewatering system shall stabilize the excavation and remain in operation until backfilling operations are complete. This pay item shall include the maintenance, repairs, pumps, fueling, oiling greasing, and other operational support procedures and supplies required for the operation of the system.

Well point dewatering is an authorized pay item only when the installation is below 6 feet in depth and site conditions warrant or on emergency response work where site conditions warrant as directed by the City representative.

The quantities to be paid for under this item shall be based on the depth of each (EA) dewatering

Docusign Envelope ID: AFCB16A4-B390-89EA-8013-04580053D90F

system per job assignment, installed and accepted.

PAY ITEM	DESCRIPTION	UNITS
20	Well Point Dewatering Initial – 6'-8' Deep	EA
21	Well Point Dewatering Initial – 8'-10' Deep	EA
22	Well Point Dewatering Initial – 10'-12' Deep	EA
23	Well Point Dewatering Initial – 12'-14' Deep	EA
24	Well Point Dewatering Initial – 14'-16' Deep	EA
25	Well Point Dewatering Initial – >16' Deep	EA

PAY ITEMS NO. 26 – 31 – WELL POINT DEWATERING ADDITIONAL

This item provides all labor, materials and equipment for the placement and operation of additional well points over and above the twenty (20) well points paid for under Pay Items 20-25. The work includes connection of the well points to the dewatering pumping equipment.

The quantity to be paid under this item will be the actual number of each (EA) well points placed and operated in the work as directed by Engineer for the various depths listed in the proposal less the twenty (20) paid for under Pay Items 20-25.

PAY ITEM	DESCRIPTION	UNITS
26	Well Point Dewatering Additional – 6'-8' Deep	EA
27	Well Point Dewatering Additional – 8'-10' Deep	EA
28	Well Point Dewatering Additional – 10'-12' Deep	EA
29	Well Point Dewatering Additional – 12'-14' Deep	EA
30	Well Point Dewatering Additional – 14'-16' Deep	EA
31	Well Point Dewatering Additional – >16' Deep	EA

PAY ITEMS NO. 32 – 35 – JACK & BORE

The work consists of furnishing all labor, equipment and materials and installing the crossing listed on the Bid Form by the jack and bore method in accordance with the specifications. The unit price shall include all costs necessary to install the crossing at the specified depth and size, including survey layout (based upon property monuments established by others), protection of property, materials, dewatering, pavement cutting, launching and receiving pits, exploratory pits, restrained joints, carrier pipe, tracer wire, tracer wire testing, casing pipe, casing spacers, casing end seals, fitting material including joints and jointing material, bracing, utility crossings, barricades, clearing, grubbing and stripping of the right-of-way, trenching, bedding and backfilling, protection of existing utilities; pigging, flushing and cleaning, pressure testing and As-built documentation. Surface restoration if specified or directed, will be paid for under other Pay Items.

The quantity for furnishing and installing the pipe or casing shall be made on a per linear foot basis as measured horizontally above the centerline of the casing including the length of four (4) feet beyond the edge of pavement or back of the concrete curb from each side of the road or driveway.

Docusign Envelope ID: AFCB16A4-B390-89EA-8013-04580053D90F

PAY ITEM	DESCRIPTION	UNITS
32	Jack & Bore 12” x 0.188” Steel Casing (6” GS)	LF
33	Jack & Bore 16” x 0.219” Steel Casing (8” GS)	LF
34	Jack & Bore 20” x 0.250” Steel Casing (10” GS)	LF
35	Jack & Bore 24” x 0.281” Steel Casing (12” GS)	LF

PAY ITEMS NO. 36 – 41 – DIRECTIONAL DRILL

The work consists of furnishing and installing underground sewer mains using the horizontal directional drilling (HDD) method of installation. This work shall include all services, equipment, materials, labor, installation of two 14 gauge minimum tracer wires, tracer wire testing, appurtenances, DI/HDPE mechanical joint adapters, pipe and joint restraints for connections to fittings, materials above or below ground along pipeline alignment; joints and jointing materials, bentonite clay slurry seal, launching and receiving pits, exploratory pits; bracing, bedding and backfill, disposal of spoil; pressure testing; pigging, flushing, cleaning erosion protection and control, surface grading, and all other related and necessary materials for the complete and proper installation, testing, and restoration of underground sewer mains

Measurement for payment for furnishing and installing HDD pipe for drill depths up to 20-foot-deep shall be made on a per linear foot (LF) basis as measured horizontally on the ground above the pipe centerline through valves and fittings for all pipe. Measurement for payment for finishing and installation HDD pipe for drill depths greater than 20-foot depth shall be made on a per linear foot (LF) basis of the actual length of pipe installed.

PAY ITEM	DESCRIPTION	UNITS
36	2” Directional Drill HDPE DR 9, IPS	LF
37	4” Directional Drill HDPE DR 11, DIPS	LF
38	6” Directional Drill HDPE DR 11, DIPS	LF
39	8” Directional Drill HDPE DR 11, DIPS	LF
40	10” Directional Drill HDPE DR 11, DIPS	LF
41	12” Directional Drill HDPE DR 11, DIPS	LF

PAY ITEMS NO. 42 – 146 – GRAVITY SANITARY SEWER

The work consists of furnishing all labor, equipment and materials for installing pipe as shown on the plans or directed by the Engineer. All ductile iron pipe shall have polyethylene encasement. The unit price shall include all costs necessary to install the pipe including survey layout (based upon property monuments established by others), clearing and grubbing, excavation, sheeting/shoring for excavation up to 6-ft deep, bracing, dewatering for excavations up to 6-ft deep, structural fill, material, polyethylene wrap on ductile iron pipe, testing, pavement cutting, trenching, utility crossings, barricades, clearing of the right-of-way, protection of property, backfilling, field layout, etc. Restoration will be paid for under separate pay items. Work performed for Point Repairs of gravity sewer pipes will be paid for under separate pay items.

Docusign Envelope ID: AFCB16A4-B390-89EA-8013-04580053D90F

The quantities of pipe to be paid for under this item shall be the length in linear feet of pipe measured along the centerline of the pipe through manholes in place, completed, tested, and accepted.

PAY ITEM	DESCRIPTION	UNITS
42	6" PVC Pipe, C-900 DR 18 (Gravity Sewer) 0' - 6' Depth	LF
43	6" PVC Pipe, C-900 DR 18 (Gravity Sewer) 6' - 8' Depth	LF
44	6" PVC Pipe, C-900 DR 18 (Gravity Sewer) 8' - 10' Depth	LF
45	6" PVC Pipe, C-900 DR 18 (Gravity Sewer) 10' - 12' Depth	LF
46	6" PVC Pipe, C-900 DR 18 (Gravity Sewer) 12' - 14' Depth	LF
47	6" PVC Pipe, C-900 DR 18 (Gravity Sewer) 14' - 16' Depth	LF
48	6" PVC Pipe, C-900 DR 18 (Gravity Sewer) 16' - 18' Depth	LF
49	8" DI Pipe, CL 350 (Gravity Sewer) 0' - 6' Depth	LF
50	8" DI Pipe, CL 350 (Gravity Sewer) 6' - 8' Depth	LF
51	8" DI Pipe, CL 350 (Gravity Sewer) 8' - 10' Depth	LF
52	8" DI Pipe, CL 350 (Gravity Sewer) 10' - 12' Depth	LF
53	8" DI Pipe, CL 350 (Gravity Sewer) 12' - 14' Depth	LF
54	8" DI Pipe, CL 350 (Gravity Sewer) 14' - 16' Depth	LF
55	8" DI Pipe, CL 350 (Gravity Sewer) 16' - 18' Depth	LF
56	8" PVC Pipe, C-900 DR 18 (Gravity Sewer) 0' - 6' Depth	LF
57	8" PVC Pipe, C-900 DR 18 (Gravity Sewer) 6' - 8' Depth	LF
58	8" PVC Pipe, C-900 DR 18 (Gravity Sewer) 8' - 10' Depth	LF
59	8" PVC Pipe, C-900 DR 18 (Gravity Sewer) 10' - 12' Depth	LF
60	8" PVC Pipe, C-900 DR 18 (Gravity Sewer) 12' - 14' Depth	LF
61	8" PVC Pipe, C-900 DR 18 (Gravity Sewer) 14' - 16' Depth	LF
62	8" PVC Pipe, C-900 DR 18 (Gravity Sewer) 16' - 18' Depth	LF
63	10" DI Pipe, CL 350 (Gravity Sewer) 0' - 6' Depth	LF

Docusign Envelope ID: AFCB16A4-B390-89EA-8013-04580053D90F

64	10" DI Pipe, CL 350 (Gravity Sewer) 6' - 8' Depth	LF
65	10" DI Pipe, CL 350 (Gravity Sewer) 8' - 10' Depth	LF
66	10" DI Pipe, CL 350 (Gravity Sewer) 10' - 12' Depth	LF
67	10" DI Pipe, CL 350 (Gravity Sewer) 12' - 14' Depth	LF
68	10" DI Pipe, CL 350 (Gravity Sewer) 14' - 16' Depth	LF
69	10" DI Pipe, CL 350 (Gravity Sewer) 16' - 18' Depth	LF
70	10" PVC Pipe, C-900 DR 18 (Gravity Sewer) 0' -6' Depth	LF
71	10" PVC Pipe, C-900 DR 18 (Gravity Sewer) 6' - 8' Depth	LF
72	10" PVC Pipe, C-900 DR 18 (Gravity Sewer) 8' - 10' Depth	LF
73	10" PVC Pipe, C-900 DR 18 (Gravity Sewer) 10' - 12' Depth	LF
74	10" PVC Pipe, C-900 DR 18 (Gravity Sewer) 12' - 14' Depth	LF
75	10" PVC Pipe, C-900 DR 18 (Gravity Sewer) 14' - 16' Depth	LF
76	10" PVC Pipe, C-900 DR 18 (Gravity Sewer) 16' - 18' Depth	LF
77	12" DI Pipe, CL 350 (Gravity Sewer) 0' - 6' Depth	LF
78	12" DI Pipe, CL 350 (Gravity Sewer) 6' - 8' Depth	LF
79	12" DI Pipe, CL 350 (Gravity Sewer) 8' - 10' Depth	LF
80	12" DI Pipe, CL 350 (Gravity Sewer) 10' - 12' Depth	LF
81	12" DI Pipe, CL 350 (Gravity Sewer) 12' - 14' Depth	LF
82	12" DI Pipe, CL 350 (Gravity Sewer) 14' - 16' Depth	LF
83	12" DI Pipe, CL 350 (Gravity Sewer) 16' - 18' Depth	LF
84	12" PVC Pipe, C-900 DR 18 (Gravity Sewer) 0' ' 6' Depth	LF
85	12" PVC Pipe, C-900 DR 18 (Gravity Sewer) 6' - 8' Depth	LF
86	12" PVC Pipe, C-900 DR 18 (Gravity Sewer) 8' - 10' Depth	LF
87	12" PVC Pipe, C-900 DR 18 (Gravity Sewer) 10' - 12' Depth	LF

Docusign Envelope ID: AFCB16A4-B390-89EA-8013-04580053D90F

88	12" PVC Pipe, C-900 DR 18 (Gravity Sewer) 12' - 14' Depth	LF
89	12" PVC Pipe, C-900 DR 18 (Gravity Sewer) 14' - 16' Depth	LF
90	12" PVC Pipe, C-900 DR 18 (Gravity Sewer) 16' - 18' Depth	LF
91	16" DI Pipe, CL 350 (Gravity Sewer) 0' - 6' Depth	LF
92	16" DI Pipe, CL 350 (Gravity Sewer) 6' - 8' Depth	LF
93	16" DI Pipe, CL 350 (Gravity Sewer) 8' - 10' Depth	LF
94	16" DI Pipe, CL 350 (Gravity Sewer) 10' - 12' Depth	LF
95	16" DI Pipe, CL 350 (Gravity Sewer) 12' - 14' Depth	LF
96	16" DI Pipe, CL 350 (Gravity Sewer) 14' - 16' Depth	LF
97	16" DI Pipe, CL 350 (Gravity Sewer) 16' - 18' Depth	LF
98	16" PVC Pipe, C-905 DR 18 (Gravity Sewer) 0' - 6' Depth	LF
99	16" PVC Pipe, C-905 DR 18 (Gravity Sewer) 6' - 8' Depth	LF
100	16" PVC Pipe, C-905 DR 18 (Gravity Sewer) 8' - 10' Depth	LF
101	16" PVC Pipe, C-905 DR 18 (Gravity Sewer) 10' - 12' Depth	LF
102	16" PVC Pipe, C-905 DR 18 (Gravity Sewer) 12' - 14' Depth	LF
103	16" PVC Pipe, C-905 DR 18 (Gravity Sewer) 14' - 16' Depth	LF
104	16" PVC Pipe, C-905 DR 18 (Gravity Sewer) 16' - 18' Depth	LF
105	18" DI Pipe, CL 350 (Gravity Sewer) 0' - 6' Depth	LF
106	18" DI Pipe, CL 350 (Gravity Sewer) 6' - 8' Depth	LF
107	18" DI Pipe, CL 350 (Gravity Sewer) 8' - 10' Depth	LF
108	18" DI Pipe, CL 350 (Gravity Sewer) 10' - 12' Depth	LF
109	18" DI Pipe, CL 350 (Gravity Sewer) 12' - 14' Depth	LF
110	18" DI Pipe, CL 350 (Gravity Sewer) 14' - 16' Depth	LF
111	18" DI Pipe, CL 350 (Gravity Sewer) 16' - 18' Depth	LF
112	18" PVC Pipe, C-905 DR 21 (Gravity Sewer) 0' - 6' Depth	LF

Docusign Envelope ID: AFCB16A4-B390-89EA-8013-04580053D90F

113	18" PVC Pipe, C-905 DR 21 (Gravity Sewer) 6' - 8' Depth	LF
114	18" PVC Pipe, C-905 DR 21 (Gravity Sewer) 8' - 10' Depth	LF
115	18" PVC Pipe, C-905 DR 21 (Gravity Sewer) 10' - 12' Depth	LF
116	18 PVC Pipe, C-905 DR 21 (Gravity Sewer) 12' - 14' Depth	LF
117	18" PVC Pipe, C-905 DR 21 (Gravity Sewer) 14' - 16' Depth	LF
118	18" PVC Pipe, C-905 DR 21 (Gravity Sewer) 16' - 18' Depth	LF
119	21" DI Pipe, CL 350 (Gravity Sewer) 0' - 6' Depth	LF
120	21" DI Pipe, CL 350 (Gravity Sewer) 6' - 8' Depth	LF
121	21" DI Pipe, CL 350 (Gravity Sewer) 8' - 10' Depth	LF
122	21" DI Pipe, CL 350 (Gravity Sewer) 10' - 12' Depth	LF
123	21" DI Pipe, CL 350 (Gravity Sewer) 12' - 14' Depth	LF
124	21" DI Pipe, CL 350 (Gravity Sewer) 14' - 16' Depth	LF
125	21" DI Pipe, CL 350 (Gravity Sewer) 16' - 18' Depth	LF
126	21" PVC Pipe, C-905 DR 21 (Gravity Sewer) 0' - 6' Depth	LF
127	21" PVC Pipe, C-905 DR 21 (Gravity Sewer) 6' - 8' Depth	LF
128	21" PVC Pipe, C-905 DR 21 (Gravity Sewer) 8' - 10' Depth	LF
129	21" PVC Pipe, C-905 DR 21 (Gravity Sewer) 10' - 12' Depth	LF
130	21" PVC Pipe, C-905 DR 21 (Gravity Sewer) 12' - 14' Depth	LF
131	21" PVC Pipe, C-905 DR 21 (Gravity Sewer) 14' - 16' Depth	LF
132	21" PVC Pipe, C-905 DR 21 (Gravity Sewer) 16' - 18' Depth	LF
133	24" DI Pipe, CL 350 (Gravity Sewer) 0' - 6' Depth	LF
134	24" DI Pipe, CL 350 (Gravity Sewer) 6' - 8' Depth	LF
135	24" DI Pipe, CL 350 (Gravity Sewer) 8' - 10' Depth	LF
136	24" DI Pipe, CL 350 (Gravity Sewer) 10' - 12' Depth	LF

Docusign Envelope ID: AFCB16A4-B390-89EA-8013-04580053D90F

137	24" DI Pipe, CL 350 (Gravity Sewer) 12' - 14' Depth	LF
138	24" DI Pipe, CL 350 (Gravity Sewer) 14' - 16' Depth	LF
139	24" DI Pipe, CL 350 (Gravity Sewer) 16' - 18' Depth	LF
140	24" PVC Pipe, C-905 DR 21 (Gravity Sewer) 0' - 6' Depth	LF
141	24" PVC Pipe, C-905 DR 21 (Gravity Sewer) 6' - 8' Depth	LF
142	24" PVC Pipe, C-905 DR 21 (Gravity Sewer) 8' - 10' Depth	LF
143	24" PVC Pipe, C-905 DR 21 (Gravity Sewer) 10' - 12' Depth	LF
144	24" PVC Pipe, C-905 DR 21 (Gravity Sewer) 12' - 14' Depth	LF
145	24" PVC Pipe, C-905 DR 21 (Gravity Sewer) 14' - 16' Depth	LF
146	24" PVC Pipe, C-905 DR 21 (Gravity Sewer) 16' - 18' Depth	LF

PAY ITEM NO. 147 – INSTALL PVC CLEANOUT

The work consists of furnishing all labor, equipment, and materials for installation of a new PVC riser pipe and cleanout at the ROW line (or other location as directed by the Engineer) on existing sewer lateral. The existing sewer lateral material may be PVC, Vitrified Clay, or DIP pipe. The unit price shall include all costs necessary to install riser pipe and cleanout including survey layout (based upon property monuments established by others), material, polyethylene wrap on ductile iron pipe, fittings, pipe cutting, wye unit on main, installation of riser pipe and cleanout, pavement cutting, trenching, dewatering for excavations up to 6-ft deep, sheeting for excavations up to 6-ft deep, bracing, utility crossings, barricades, clearing of the right-of-way, protection of property, backfilling, field layout, restoration, sodding, etc. The pay item shall include cleanout installation up to ten (10) feet in depth.

The quantities of pipe to be paid for under this item shall be each measured and inspected in place, completed, and accepted.

PAY ITEM NO. 148 – REPLACE PVC CLEAN OUT WITH MANHOLE STRUCTURE

The work consists of furnishing all labor, equipment, and materials for the replacement of an existing PVC clean out with a concrete manhole. The unit price shall include all costs necessary to replace clean out including survey layout (based on property monuments established by others), material, fittings, pipe cutting, concrete manhole installation, pavement cutting, trenching, dewatering for excavations up to 6-ft deep, bracing, utility crossings, barricades, clearing of the right-of-way, protection of property, backfilling, field layout, restoration, sodding, etc. The pay item shall include the removal of clean outs and installation of manholes up to four (4) feet in depth.

Docusign Envelope ID: AFCB16A4-B390-89EA-8013-04580053D90F

The quantities of manholes to be paid for under this item shall be each measured and inspected in place, completed, and accepted.

PAY ITEMS NO. 149 – 153 – REMOVE PIPE (GRAVITY SEWER)

The work consists of furnishing all labor and equipment to remove and dispose of out of service mains. Unless otherwise indicted by the Engineer or his representative, the pipe removed becomes the property of the Contractor. The unit price shall include all costs necessary to remove the pipe (including fittings, valves, reverse deadmen, etc.) including pavement cutting, trenching, replacement of base material, dewatering for excavations up to 6- ft deep, sheeting for excavations up to 6-ft deep, bracing, utility crossings, barricades, clearing of the right-of-way, protection of property, backfilling, restoration of pavement and grass, etc.

The quantities of pipe removal to be paid for under this Item shall be the length in linear feet (LF) of pipe measured along the centerline of the pipe through valves and fittings actually removed.

PAY ITEM	DESCRIPTION	UNITS
149	Remove Pipe 2” or 4” (Gravity Sewer)	LF
150	Remove Pipe 6” or 8” (Gravity Sewer)	LF
151	Remove Pipe 10” or 12” (Gravity Sewer)	LF
152	Remove Pipe 15”, 16”, or 18” (Gravity Sewer)	LF
153	Remove Pipe 21” or 24” (Gravity Sewer)	LF

PAY ITEMS NO. 154 – 167 – INSTALL OR ADJUST SERVICE LATERAL

The work consists of furnishing all labor, equipment, by-pass operations, customer coordination and materials for installation of a new or relocating a sanitary sewer service lateral found to be in conflict with proposed improvement or as directed by the Engineer. The unit price shall include all costs necessary to install up 30 linear feet of service pipe including survey layout (based upon property monuments established by others), material, polyethylene wrap on ductile iron pipe, fittings, pipe cutting, wye unit on main, installation of riser pipe and cleanout at the ROW line, pavement cutting, trenching, dewatering for excavations up to 6-ft deep, sheeting for excavations up to 6-ft deep, bracing, utility crossings, barricades, clearing of the right-of-way, protection of property, backfilling, field layout, etc. Service pipe lengths in excess of 30 feet will be paid for as Gravity Sewer Pipe (Pay Items 41-145). Restoration will be paid for under separate pay items.

The quantities of pipe to be paid for under this item shall be each measured and inspected in place, completed, and accepted.

PAY ITEM	DESCRIPTION	UNITS
154	4" Pipe - Install or Adjust Service Lateral 0'-6' Deep	EA
155	4" Pipe - Install or Adjust Service Lateral 6'-8' Deep	EA
156	4" Pipe - Install or Adjust Service Lateral 8'-10' Deep	EA
157	4" Pipe - Install or Adjust Service Lateral 10'-12' Deep	EA

Docusign Envelope ID: AFCB16A4-B390-89EA-8013-04580053D90F

158	4" Pipe - Install or Adjust Service Lateral 12'-14' Deep	EA
159	4" Pipe - Install or Adjust Service Lateral 14'-16' Deep	EA
160	4" Pipe - Install or Adjust Service Lateral 16'-18' Deep	EA
161	6" Pipe - Install or Adjust Service Lateral 0'-6' Deep	EA
162	6" Pipe - Install or Adjust Service Lateral 6'-8' Deep	EA
163	6" Pipe - Install or Adjust Service Lateral 8'-10' Deep	EA
164	6" Pipe - Install or Adjust Service Lateral 10'-12' Deep	EA
165	6" Pipe - Install or Adjust Service Lateral 12'-14' Deep	EA
166	6" Pipe - Install or Adjust Service Lateral 14'-16' Deep	EA
167	6" Pipe - Install or Adjust Service Lateral 16'-18' Deep	EA

PAY ITEMS NO. 168 – 177 – SEWER LINE MANHOLE CONNECTION

The work consists of all labor, equipment, investigative digging, and materials for repair of an existing connection into manhole wall or to install a new connection. All core drills shall be of sufficient diameter to accommodate pipe connection. Manhole connections may be either gravity sewer or sewer forcemain. All connections shall include a water stop or boot connection. Payment shall also include core drills, masonry or concrete patching, fiberglass and interior surface patching, shoring, dewatering for excavations up to 6-ft deep, backfill, refill, compaction operations, and compaction testing or re-testing. All sewer forcemain connections shall include installation of a drop bowl, paid for under Pay Items 177-186. The work does not include excavation or surface restoration which, if required, will be paid for, or is part of the work, under other Pay Items.

The quantities of connections into manholes to be paid under this item shall be each measured in place, completed, inspected, and accepted.

PAY ITEM	DESCRIPTION	UNITS
168	2" Sewer Line Manhole Connection	EA
169	4" Sewer Line Manhole Connection	EA
170	6" Sewer Line Manhole Connection	EA
171	8" Sewer Line Manhole Connection	EA
172	10" Sewer Line Manhole Connection	EA
173	12" Sewer Line Manhole Connection	EA
174	16" Sewer Line Manhole Connection	EA
175	18" Sewer Line Manhole Connection	EA
176	21” Sewer Line Manhole Connection	EA
177	24” Sewer Line Manhole Connection	EA

PAY ITEMS NO. 178 – 187 – INSIDE DROP CONNECTION

This item provides for all labor, equipment and material to install a PVC drop connection inside an existing manhole. This work includes all interior piping, drop bowl and any masonry or concrete

Docusign Envelope ID: AFCB16A4-B390-89EA-8013-04580053D90F

and coatings patching required to complete a repair connection or install a new drop connection to an existing manhole in accordance with Technical Specifications.

The quantity to be measured for payment under this Pay Item will be the actual number each (EA) of manhole inside drop connections completed and accepted.

PAY ITEM	DESCRIPTION	UNITS
178	2" Inside Drop Connection	EA
179	4" Inside Drop Connection	EA
180	6" Inside Drop Connection	EA
181	8" Inside Drop Connection	EA
182	10" Inside Drop Connection	EA
183	12" Inside Drop Connection	EA
184	15"/16" Inside Drop Connection	EA
185	18" Inside Drop Connection	EA
186	21" Inside Drop Connection	EA
187	24" Inside Drop Connection	EA

PAY ITEM NO. 188 – GROUTING OUT OF SERVICE PIPE (FORCE MAIN)

This item provides for all labor, equipment and material to install chemical grout or flowable fill into an existing pipe to be abandoned. Prior to grout filling the line, the Contractor shall verify that no live services remain connected to the line. The underground conduit (pipe, waterline, sewer line, storm drain line, etc.) be completely filled with a low strength cement grout (or flowable fill). In order to achieve this, the grout to be pumped into the line shall have a consistency that will permit forced flow into the entire length of line. Blocking the line by intermediate excavation and gravity flow concrete or grout is NOT acceptable. The existing line to be grout filled shall be exposed and plugged with concrete bulkheads or plugs at both ends. The grout shall be pumped through the pipe until the grout is visible at the other end of the underground conduit. No more than 15 psi shall be used to pump the grout mixture, and care should be used to avoid grout filling adjoining voids.

The quantities of pipe to be paid for under this Item shall be the volume in cubic yards of the inside pipe area times the length of pipe. No payment will be made for material that escapes the pipe or ends enclosures.

PAY ITEMS NO. 189 – 191 – DISCONNECT & PLUG PIPE

The work consists of furnishing all labor, equipment and materials to disconnect and cap/plug sewer mains that will remain in or out of service. The unit price shall include all nuts, bolts, gaskets, caps/plugs, restraint devices, thrust blocks, cutting existing pipe, removal of valve boxes, blow-off assemblies, scheduling and notification of service interruptions and all other operations required to disconnect and cap/plug the water mains.

The quantity of disconnect and cap/plug water mains to be paid for under this item shall be the

Docusign Envelope ID: AFCB16A4-B390-89EA-8013-04580053D90F

number each (EA) measured in place, completed and accepted.

PAY ITEM	DESCRIPTION	UNITS
189	Disconnect & Plug 2" or 4" Pipe	EA
190	Disconnect & Plug 6" or 8" Pipe	EA
191	Disconnect & Plug 10" or 12" Pipe	EA

PAY ITEMS NO. 192 – 202 – SANITARY SEWER FORCE MAIN

The work consists of furnishing all labor, equipment and materials and installing sanitary forcemain pipe by the open-cut method in accordance with the specifications.

The unit price shall include all costs necessary to install the pipe up to 6 feet in depth, including: survey layout (based upon property monuments established by others); protection of property; protection of existing utilities, mailboxes and service connections; erosion protection (silt fence, hay bales, floating turbidity barriers, or other means, as required); materials, pavement cutting, extra pipe fitting material including joints/jointing material/restraints; shoring, sheeting for excavations up to 6-ft deep; bracing; utility crossings; barricades; clearing; grubbing and stripping of the right-of-way; trenching, bedding and backfilling; pigging; flushing and cleaning; pressure testing. Fittings shall be included in the cost of 2” pipe. Dual tracer wire and tracer wire testing shall be included in the price for PVC pipe items. Polyethylene encasement shall be included in the bid price for DI pipe items. Restoration will be paid for under separate pay items.

Additional payment will be made for extra depth installation over six feet under a separate pay item. Well point dewatering is an authorized pay item only when the installation is below 6 feet in depth and site conditions warrant; all dewatering up to 6 feet in depth is included in this pay item.

The quantities of pipe to be paid for under this Item shall be the length in linear feet of pipe measured along the centerline of the pipe in place, completed, tested, and accepted.

PAY ITEM	DESCRIPTION	UNITS
192	2" PVC Restrained Joint Pipe & Fittings FM, SDR 21	LF
193	4" PVC Pipe, C-900 DR 18 (Force Main)	LF
194	4" PVC Restrained Joint Pipe & Fittings FM, C-900 DR 18	LF
195	6" PVC Pipe, C-900 DR 18 (Force Main)	LF
196	6" PVC Restrained Joint Pipe & Fittings FM, C-900 DR 18	LF
197	8" PVC Pipe, C-900 DR 18 (Force Main)	LF
198	8" PVC Restrained Joint Pipe & Fittings FM, C-900 DR 18	LF
199	10" PVC Pipe, C-900 DR 18 (Force Main)	LF
200	10" PVC Restrained Joint Pipe & Fittings FM, C-900 DR 18	LF

Docusign Envelope ID: AFCB16A4-B390-89EA-8013-04580053D90F

201	12" PVC Pipe, C-900 DR 18 (Force Main)	LF
202	12" PVC Restrained Joint Pipe & Fittings FM, C-900 DR 18	LF

PAY ITEMS NO. 203 – 208 – RESTRAINED JOINTS

The work specified in this item describes measurement and payment for furnishing all labor, equipment and materials and installing restrained joint hardware including mechanical joint restrainers, bell restrainers and PVC restrainers complete including bolts, gaskets, rods, special flanges, color coded polyethylene encasement , testing, acceptance, and ready for service. Restrained joints for pipe associated with fittings per the design of new pipe shall be paid for under separate pay item. This item shall only be used to restrain existing in-service pipelines or to install additional restraints above the amount specified, as directed by the Engineer or his representative.
`

The quantities of retrained joints to be paid for under this item shall be the number of each (EA) measured in place and accepted. No restrained joint hardware or any part of a restrained joint hardware shall be included for payment under more than one Item.

PAY ITEM	DESCRIPTION	UNITS
203	2" Restrained Joints	EA
204	4" Restrained Joints	EA
205	6" Restrained Joints	EA
206	8" Restrained Joints	EA
207	10" Restrained Joints	EA
208	12" Restrained Joints	EA

PAY ITEMS NO. 209 – 211 - FORCE MAIN OVER DEPTH EXCAVATION

The work consists of furnishing all labor and equipment to excavate additional depth greater than 6 feet depth for installation of sewer forcemain pipe by the open-cut method in accordance with the specifications. The unit price shall include all costs necessary to excavate additional depth over 6 feet including: survey layout (based upon property monuments established by others); protection of property, existing utilities, mailboxes and service connections; erosion protection (silt fence, hay bales, floating turbidity barriers, or other means, as required); materials; pavement cutting; bracing; utility crossings; barricades; clearing; grubbing and stripping of the right-of-way; trenching, bedding; and backfilling. Well point dewatering and sheeting are authorized pay items when the installation is below 6 feet in depth and site conditions warrant.

Measurement for payment for excavating each additional foot of depth to install pipe or appurtenances shall be made on a per linear foot (LF) basis for each additional vertical foot of depth over 6 feet as measured horizontally above the pipe centerline through valves and fittings.

PAY ITEM	DESCRIPTION	UNITS
209	2"-4" Forcemain Pipe and Appurtenances - Over Depth Excavation	LF

Docusign Envelope ID: AFCB16A4-B390-89EA-8013-04580053D90F

210	6"-8" Forcemain Pipe and Appurtenances - Over Depth Excavation	LF
211	10"-12" Forcemain Pipe and Appurtenances - Over Depth Excavation	LF

PAY ITEMS NO. 212 – 214 – REMOVE OUT OF SERVICE PIPE (FORCE MAIN)

The work consists of furnishing all labor and equipment to remove and dispose of out of service mains. Unless otherwise indicted by the Engineer or his representative, the pipe removed becomes the property of the Contractor. The unit price shall include all costs necessary to remove the pipe (including fittings, valves, reverse deadmen, etc) including pavement cutting, trenching, replacement of base material, dewatering for excavations up to 6-ft deep, sheeting for excavations up to 6-ft deep, bracing, utility crossings, barricades, clearing of the right-of-way, protection of property, backfilling, etc. Restoration will be paid for under separate pay items.

The quantities of pipe removal to be paid for under this Item shall be the length in linear feet (LF) of pipe measured along the centerline of the pipe through valves and fittings actually removed.

PAY ITEM	DESCRIPTION	UNITS
212	Remove Out of Service Pipe 2" or 4" (Force Main)	LF
213	Remove Out of Service Pipe 6" or 8" (Force Main)	LF
214	Remove Out of Service Pipe 10" or 12" (Force Main)	LF

PAY ITEMS NO. 215 – 220 – SLEEVED CONNECTION

The work consists of furnishing all labor, equipment and materials for installing sleeve connections not included in other items. The unit price shall include notification of shutdown to property owners, establishing alignment, moving and aligning old and new pipe, cleaning and cutting old pipe, sterilization, restraint jointing materials, color-coded polyethylene encasement, and all other operations required to make the connection. All connections shall include the cost of the sleeve or coupling, joint restraints and removal & disposal of up to twenty feet of existing main. Valves, pipe, additional joint restraints on existing main and fittings for connections shall be paid for under separate pay items.

The quantities of sleeve connection to be paid for under this item shall be the number each measured in place, completed, tested, and accepted

PAY ITEM	DESCRIPTION	UNITS
215	2" Sleeved Connection	EA
216	4" Sleeved Connection	EA
217	6" Sleeved Connection	EA
218	8" Sleeved Connection	EA
219	10" Sleeved Connection	EA
220	12" Sleeved Connection	EA

Docusign Envelope ID: AFCB16A4-B390-89EA-8013-04580053D90F

PAY ITEMS NO. 221 – 223 – REVERSE DEADMAN

The work covered by this item consists of reverse deadman installation for mains up to 12 inch in diameter. The installation shall include the corresponding size restrained joint as shown in the standard detail. This pay item includes: the furnishing of all materials and for the proper installation of the reverse deadman in strict accordance with the appropriate pipe specifications, excavation, erosion protection and control, backfill, dewatering for excavations up to 6-ft deep, sheeting for excavations up to 6-ft deep, shoring, surface grading, disposal of water, appropriate sized joint restraint, and concrete, all tools, equipment, labor, and materials necessary to install the reverse deadman as shown, specified or required for the proper completion of the work. Concrete shall cure for 72 hours or as determined by concrete mix design before applying force.

The quantities of reverse dead-man construction to be paid under this item shall be each measured in place, inspected, cured, and accepted.

PAY ITEM	DESCRIPTION	UNITS
221	Reverse Deadman for 2" or 4" Pipe	EA
222	Reverse Deadman for 6" or 8" Pipe	EA
223	Reverse Deadman for 10" or 12" Pipe	EA

PAY ITEM NO. 224 – DUCTILE IRON FITTINGS

The work consists of furnishing all labor, equipment and materials for installing ductile iron fittings not included in other items. All fittings shall include and be installed with joint restraints. The unit price includes furnishing and installing all fittings and materials above or below ground along the pipeline alignment; joints, joint restrainers, and jointing materials; bracing, shoring, and sheeting; dewatering, clearing, grubbing, and stripping; trenching, bedding and backfill; constructing the specified protection and adjusting of existing above ground and underground utilities and service connections; disposal of spoil; color coded polyethylene encasement; pressure testing; erosion protection and control, and all other related and necessary materials, work and equipment required to construct a complete, operable pipeline. The cost of furnishing and installing joint restraints shall be included in the unit price for Ductile Iron Fittings.

The quantities of ductile iron fittings to be paid for under this Item shall be the weight of the fitting required as established weight per fitting, including bolts, in tons (2,000 pounds) measured in place, completed, tested, and accepted. The weight of gaskets, jointing materials, etc., shall not be included in the computation of ductile iron fitting tonnage.

PAY ITEMS NO. 225 & 226 – 2” SS 316 AIR RELEASE VALVE ASSEMBLIES

The work consists of installing 2” SS 316 air release assemblies on sanitary sewer force mains. The unit bid price shall include installing the air release assembly, testing, excavation, backfill, bracing, shoring, sheeting for excavations up to 6-ft deep, dewatering for excavations up to 6-ft deep, surface grading, erosion protection and control, furnishing and installing tap saddle, tap, corporation stop, ball corporation, curb stop, automatic air release valve, enclosure, testing, miscellaneous brass nipples and fittings, and incidental items required to install a new assembly

Docusign Envelope ID: AFCB16A4-B390-89EA-8013-04580053D90F

as shown on the standard detail. All assemblies shall include tracer wire access, drainage gravel and miscellaneous nipples and fittings as shown in the standard details, filter fabric, valve identification tags, paint reference stripe on curb, painting of valve cover and meter boxes.

Measurement shall be on an individual basis for each (EA) assembly installed and accepted.

PAY ITEM	DESCRIPTION	UNITS
225	2" SS 316 Air Release Assembly (Underground)	EA
226	2" SS 316 Air Release Assembly (Aboveground)	EA

PAY ITEMS NO. 227 – 232 – RESILIENT WEDGE GATE VALVE

The work consists of furnishing all labor, equipment and materials for installing a valve not included in other items. The unit bid price includes furnishing and installing valves, valve boxes and covers, color coded polyethylene encasement, tracer wire access, filter fabric, valve identification tags, paint reference stripe on curb, painting of valve cover, concrete valve box pad, extension stems, joint restraints, pressure testing, excavation, backfill, dewatering for excavations up to 6-ft deep, sheeting for excavations up to 6-ft deep, shoring, surface grading and incidental construction associated with these items.

The quantities of valves to be paid for under this Item shall be the number each measured in place, completed, tested, and accepted.

PAY ITEM	DESCRIPTION	UNITS
227	2" RWGV (Resilient Wedge Gate Valve) & Box	EA
228	4" RWGV & Box C 515	EA
229	6" RWGV & Box C 515	EA
230	8" RWGV & Box C 515	EA
231	10" RWGV & Box C 515	EA
232	12" RWGV & Box C 515	EA

PAY ITEMS NO. 233 & 234 – ADJUST VALVE BOX TO FINISHED GRADE

The work consists of furnishing all labor, equipment, and materials for the vertical adjustment of an existing valve box and cover to match proposed finish grade. The unit price shall include placement of the valve cover to finish grade as shown on plans or directed by the Engineer.

the quantity of valve box and cover adjustments to be paid for under this item shall be the number each measured in place, on grade, inspected, and accepted.

PAY ITEM	DESCRIPTION	UNITS
233	Adjust Valve Box to Finished Grade (In Pavement)	EA
234	Adjust Valve Box to Finished Grade (Outside of Pavement)	EA

Docusign Envelope ID: AFCB16A4-B390-89EA-8013-04580053D90F

PAY ITEMS NO. 235 – 239 – LINE STOPS

The work consists of furnishing all labor, equipment and materials, including but not limited to dewatering for excavations up to 6-ft deep, excavation, sheeting for excavations up to 6-ft deep, shoring, preliminary measurements of the pipe prior to ordering the saddle, installing concrete cradle and support, line stop tapping sleeve, valve, and performing line stop installation with and for the duration of the new valve installation, pressure testing of tap saddle/sleeve, polyethylene wrap, and valve box for constructing a line stop on an existing sewer main and the adjustment of its valve box to finish grade. If a by-pass line stop installation is required, the by-pass piping will be paid for under line items for piping.

The quantities of Line Stops to be paid for under this Item shall be the number each measured in place, completed, tested, and accepted.

PAY ITEM	DESCRIPTION	UNITS
235	4" Line Stop	EA
236	6" Line Stop	EA
237	8" Line Stop	EA
238	10" Line Stop	EA
239	12" Line Stop	EA

PAY ITEMS NO. 240 – 259 – TAPPLING SLEEVE/SADDLE VALVE & BOX

The work consists of the installation of tapping saddle or sleeve and associated valves. The quantity to be paid for under this item is the number of connections acceptably installed. Cut in tee and valve may be required in some locations due to utility conflicts and will be paid for as equal sized tap. The unit bid price includes all materials and installation from the point of connection to the main line including scheduling and notification of service interruptions, furnishing and installing tapping saddle, color coded polyethylene encasement, valves, taps, fittings, piping, joint restraints, valve boxes and covers, concrete valve box pads, valve extension stems, tracer wire access, valve identification tags, filter fabric, paint reference stripe on curb, painting of valve box cover, excavation, erosion protection and control, backfill, dewatering for excavations up to 6-ft deep, sheeting for excavations up to 6-ft deep, shoring, surface grading, disposal of water, pressure testing and all other related, necessary, and incidental materials, work and equipment required to complete the connection. All joints shall be restrained.

The quantities of valves/taps to be paid for under this Item shall be the number each measured in place, completed, tested, and accepted.

PAY ITEM	DESCRIPTION	UNITS
240	4" x 2" Tapping Saddle Valve & Box	EA
241	4" x 4" Tapping Sleeve Valve & Box	EA
242	6" x 2" Tapping Saddle Valve & Box	EA
243	6" x 4" Tapping Sleeve Valve & Box	EA
244	6" x 6" Tapping Sleeve Valve & Box	EA

Docusign Envelope ID: AFCB16A4-B390-89EA-8013-04580053D90F

245	8" x 2" Tapping Saddle Valve & Box	EA
246	8" x 4" Tapping Sleeve Valve & Box	EA
247	8" x 6" Tapping Sleeve Valve & Box	EA
248	8" x 8" Tapping Sleeve Valve & Box	EA
249	10" x 2" Tapping Saddle Valve & Box	EA
250	10" x 4" Tapping Sleeve Valve & Box	EA
251	10" x 6" Tapping Sleeve Valve & Box	EA
252	10" x 8" Tapping Sleeve Valve & Box	EA
253	10" x 10" Tapping Sleeve Valve & Box	EA
254	12" x 2" Tapping Saddle Valve & Box	EA
255	12" x 4" Tapping Sleeve Valve & Box	EA
256	12" x 6" Tapping Sleeve Valve & Box	EA
257	12" x 8" Tapping Sleeve Valve & Box	EA
258	12" x 10" Tapping Sleeve Valve & Box	EA
259	12" x 12" Tapping Sleeve Valve & Box	EA

PAY ITEMS NO. 260 – 269 – MANHOLES

The work consists of furnishing all labor, equipment, by-pass operations, customer coordination and materials for constructing a sanitary sewer manhole at location shown on plans or as directed by the Engineer. The unit price shall include all costs necessary to construct the manhole including survey layout (based upon property monuments established by others), material, pavement cutting, trenching, replacement of base material, dewatering for excavations up to 6-ft deep, sheeting for excavations up to 6-ft deep, bracing, utility crossings, barricades, clearing of the right-of-way, protection of property, and backfilling. The depth of the manhole will be measured from the top of the cover down to the invert of the outlet sewer pipe. Excavation and well point dewatering for pipeline Manhole installations are separate pay items.

The quantities of manholes to be paid under this item shall be vertical feet of depth measured in place, completed, inspected, and accepted.

PAY ITEM	DESCRIPTION	UNITS
260	4' Dia. - Precast Manhole Standard	VF
261	4' Dia. - Precast Manhole Inside Drop	VF
262	4' Dia. - Precast Manhole Outside Drop	VF
263	5' Dia. - Precast Manhole Standard	VF
264	5' Dia. - Precast Manhole Inside Drop	VF
265	5' Dia. - Precast Manhole Outside Drop	VF
266	5' Dia. - Precast Air Release Manhole	VF
267	6' Dia. - Precast Manhole Standard	VF
268	6' Dia. - Precast Manhole Inside Drop	VF
269	6' Dia. - Precast Manhole Outside Drop	VF

PAY ITEM NO. 270 – REMOVAL OF EXISTING MANHOLE

Docusign Envelope ID: AFCB16A4-B390-89EA-8013-04580053D90F

This work item shall provide all labor, equipment and materials for the removal of existing manholes up to four feet in depth and plugging of existing lines with brick and mortar. The work does not include excavation, surface restoration, sheeting, MOT, or well point dewatering which, if required, will be paid for under other Pay Items.

The quantity to be measured for payment under this Pay Item will be the actual number of manhole removals completed and accepted up to four (4) feet in depth.

PAY ITEM NO. 271 – REMOVAL OF EXISITING MANHOLE ADDITIONAL

The work consists of all work contained in Pay Item Remove Existing Manholes and provides for manhole removal for depths greater than four (4') feet deep.

The quantity to be measured for payment under this Pay Item will be the actual length in vertical feet of additional manhole removal in the work less the four (4) feet paid for under other Pay Items

PAY ITEMS NO. 272 – 279 – INITIAL EXCAVATION

The work consists of furnishing all labor, equipment, materials, traffic control and supervision necessary for the excavation exposing up to 30 linear feet of existing sanitary sewer gravity or forcemain pipe as measured along the pipe in a horizontal plane. The unit price shall contain all costs necessary to expose the pipe, temporary sheeting/shoring/bracing up to 6-ft deep, dewatering, well point dewatering up to 6' deep, crushed stone, stabilization and protection of existing utilities, property protection, backfilling, compaction, and all other related and necessary materials required to expose the pipe to be repaired in accordance with the Contract Documents. There shall be one Initial Excavation per work site unless otherwise approved by the Engineer. The following items, if required or as determined by the Engineer, will be paid for under other Contract Pay Items: pipeline point repair, pipeline offset relocation, select backfill material, well point dewatering, by-pass pumping, surface restoration, sheeting for excavations greater than 6-ft deep, and pavement restoration.

The quantity to be paid for under this item shall be the actual number of each (EA) per job assignment for initial excavation made in conjunction with exploration or pipe repair at the various cut ranges listed. The cut for Initial Excavation shall be the average of the pipe cut (grade elevation minus the pipe invert elevation) measured at each end of the trench, which measures 30 feet in length or less in conjunction of pipeline point repair or relocation offset.

PAY ITEM	DESCRIPTION	UNITS
272	Initial Excavation - 0'-6' Deep	EA
273	Initial Excavation - 6'-8' Deep	EA
274	Initial Excavation - 8'-10' Deep	EA
275	Initial Excavation - 10'-12' Deep	EA
276	Initial Excavation - 12'-14' Deep	EA
277	Initial Excavation - 14'-16' Deep	EA
278	Initial Excavation - 16'-18' Deep	EA
279	Initial Excavation - 18'-20' Deep	EA

Docusign Envelope ID: AFCB16A4-B390-89EA-8013-04580053D90F

PAY ITEMS NO. 280 – 287 – ADDITIONAL EXCAVATION

The work consists of furnishing all labor, equipment, materials, traffic control and supervision necessary for the excavation to expose existing pipe as measured in the horizontal plane in excess of the original 30 linear feet included in Initial Excavation pay item. This Pay Item is applicable only in conjunction with, and includes the same work as listed in Pay Items 271-278.

Measurement of payment shall be the actual number of linear feet (LF) per job assignment for additional excavations made in conjunction with exploration of pipeline point repair or relocation offset.

PAY ITEM	DESCRIPTION	UNITS
280	Additional Excavation - 0'-6' Deep	LF
281	Additional Excavation - 6'-8' Deep	LF
282	Additional Excavation - 8'-10' Deep	LF
283	Additional Excavation - 10'-12' Deep	LF
284	Additional Excavation - 12'-14' Deep	LF
285	Additional Excavation - 14'-16' Deep	LF
286	Additional Excavation - 16'-18' Deep	LF
287	Additional Excavation - 18'-20' Deep	LF

PAY ITEMS NO. 288 – 295 – BYPASS PUMPING SETUP & OPERATION

This item provides for set up and operation of by-pass sewage pumping equipment and temporary piping as required and as described in the Standard Technical Specifications. This Pay Item is applicable on projects or repairs that have high flow or require an over night by pass operation.

The quantity to be measured for payment under this Pay Item will be the actual number of by-pass pumping set ups and operations, per part of day, required by the Engineer in the work. The minimum measurement for this pay item is eight (8) hours or 0.333 days and is measured from the time that the sewage is actually by-passed. This eight (8) hour minimum (0.333 days) includes full compensation for set up and operation for up to the first eight (8) hour period. Additional time will be in tenths of the day or twenty-four (24) hour period. The quantities determined shall be paid per day (DAY) or portion of day of by-pass pumping set up and operation.

PAY ITEM	DESCRIPTION	UNITS
288	Wastewater Bypass Pumping, Set up, 6" - 10" diameter	EA
289	Wastewater Bypass Pumping, Set up, 12" - 14" diameter	EA
290	Wastewater Bypass Pumping, Set up, 15" - 21" diameter	EA
291	Wastewater Bypass Pumping, Set up, 24" diameter	EA
292	Wastewater Bypass Pumping, Operation, 6" - 10" diameter	DAY

Docusign Envelope ID: AFCB16A4-B390-89EA-8013-04580053D90F

293	Wastewater Bypass Pumping, Operation, 12" - 14" diameter	DAY
294	Wastewater Bypass Pumping, Operation, 15" - 21" diameter	DAY
295	Wastewater Bypass Pumping, Operation, 24" diameter	DAY

PAY ITEMS NO. 296 – 311 – GRAVITY SEWER POINT REPAIR

This item provides all labor, equipment and materials for the replacement of up to twenty (20) linear feet of gravity sewer pipe with PVC or Ductile Iron pipe (Material as directed by the Engineer at each occurrence). The existing sewer pipe may be Vitrified Clay, PVC, Ductile Iron, Cast Iron, or Concrete gravity sewer main. The work includes repair sleeves, cutting existing pipe, pipe bedding, new replacement pipe, disposal of existing pipe, and reconnection of lateral connections to sewer main. This item also includes maintaining of flow in low flow systems that can be accomplished with up to a four (4) inch mud hog, diaphragm or centrifugal type pump and lay flat hose or temporarily blocking the sewer for a period of time to facilitate the repair. The cost of lengths of pipe greater than twenty (20) linear feet will be paid for under Pay Items 209-324. The work does not include sheeting or well point dewatering which, if required, will be paid for, or is part of the work, under other Pay Items.

The quantity to be paid under this item will be in accordance with each (EA) pipe size to be repaired as noted in the contract pay items.

PAY ITEM	DESCRIPTION	UNITS
296	6" Dia. Pipe Gravity Sewer Point Repair (DI Replacement Pipe)	EA
297	6" Dia. Pipe Gravity Sewer Point Repair (PVC Replacement Pipe)	EA
298	8" Dia. Pipe Gravity Sewer Point Repair (DI Replacement Pipe)	EA
299	8" Dia. Pipe Gravity Sewer Point Repair (PVC Replacement Pipe)	EA
300	10" Dia. Pipe Gravity Sewer Point Repair (DI Replacement Pipe)	EA
301	10" Dia. Pipe Gravity Sewer Point Repair (PVC Replacement Pipe)	EA
302	12" Dia. Pipe Gravity Sewer Point Repair (DI Replacement Pipe)	EA
303	12" Dia. Pipe Gravity Sewer Point Repair (PVC Replacement Pipe)	EA
304	15"/16" Dia. Pipe Gravity Sewer Point Repair (DI Replacement Pipe)	EA
305	15"/16" Dia. Pipe Gravity Sewer Point Repair (PVC Replacement Pipe)	EA
306	18" Dia. Pipe Gravity Sewer Point Repair (DI Replacement Pipe)	EA

Docusign Envelope ID: AFCB16A4-B390-89EA-8013-04580053D90F

307	18" Dia. Pipe Gravity Sewer Point Repair (PVC Replacement Pipe)	EA
308	21" Dia. Pipe Gravity Sewer Point Repair (DI Replacement Pipe)	EA
309	21" Dia. Pipe Gravity Sewer Point Repair (PVC Replacement Pipe)	EA
310	24" Dia. Pipe Gravity Sewer Point Repair (DI Replacement Pipe)	EA
311	24" Dia. Pipe Gravity Sewer Point Repair (PVC Replacement Pipe)	EA

PAY ITEMS NO. 312 – 327 – GRAVITY SEWER POINT REPAIR – ADDITIONAL LENGTH

This item provides all labor, equipment and materials for the additional length of replacement gravity sewer pipe with PVC or Ductile Iron pipe (Material as directed by the Engineer at each occurrence). This Pay Item provides for an additional thirty (30) feet of replacement pipe. This Pay Item is used only in conjunction with Pay Items 295-310 and contains the same work therein described. Pipe point repairs requiring greater than fifty (50) feet of pipe will be constructed under separate Contract Pay Items.

The quantity to be paid under this item will be in accordance with the linear feet (LF) installed above twenty (20) linear for each pipe size to be repaired as noted in the contract pay items.

PAY ITEM	DESCRIPTION	UNITS
312	6" Dia. Pipe Gravity Sewer Point Repair - Additional Length (DI Replacement Pipe)	LF
313	6" Dia. Pipe Gravity Sewer Point Repair - Additional Length (PVC Replacement Pipe)	LF
314	8" Dia. Pipe Gravity Sewer Point Repair - Additional Length (DI Replacement Pipe)	LF
315	8" Dia. Pipe Gravity Sewer Point Repair - Additional Length (PVC Replacement Pipe)	LF
316	10" Dia. Pipe Gravity Sewer Point Repair - Additional Length (DI Replacement Pipe)	LF
317	10" Dia. Pipe Gravity Sewer Point Repair - Additional Length (PVC Replacement Pipe)	LF
318	12" Dia. Pipe Gravity Sewer Point Repair - Additional Length (DI Replacement Pipe)	LF
319	12" Dia. Pipe Gravity Sewer Point Repair - Additional Length (PVC Replacement Pipe)	LF

Docusign Envelope ID: AFCB16A4-B390-89EA-8013-04580053D90F

320	15"/16" Dia. Pipe Gravity Sewer Point Repair - Additional Length (DI Replacement Pipe)	LF
321	15"/16" Dia. Pipe Gravity Sewer Point Repair - Additional Length (PVC Replacement Pipe)	LF
322	18" Dia. Pipe Gravity Sewer Point Repair - Additional Length (DI Replacement Pipe)	LF
323	18" Dia. Pipe Gravity Sewer Point Repair - Additional Length (PVC Replacement Pipe)	LF
324	21" Dia. Pipe Gravity Sewer Point Repair - Additional Length (DI Replacement Pipe)	LF
325	21" Dia. Pipe Gravity Sewer Point Repair - Additional Length (PVC Replacement Pipe)	LF
326	24" Dia. Pipe Gravity Sewer Point Repair - Additional Length (DI Replacement Pipe)	LF
327	24" Dia. Pipe Gravity Sewer Point Repair - Additional Length (PVC Replacement Pipe)	LF

PAY ITEMS NO. 328 – 333 – FORCE MAIN POINT REPAIR

This item provides all labor, equipment and materials for the replacement of up to ten (10) linear feet of pipe and may be used for routine response and emergency repairs at the discretion of the Engineer or his representative. The pipe being repaired may be PVC, HDPE, Ductile Iron, or Cast Iron. All ductile iron pipe shall have polyethylene encasement. The work includes furnishing and installing two full seal clamps, bell joint seal clamps or two solid sleeves, cutting existing pipe, pipe bedding, dewatering for excavations up to 6-ft deep, sheeting for excavations up to 6-ft deep, and disposal of existing pipe. Additional pipe materials over ten (10) linear feet in length will be paid for under Pay Items 191-201. Excavations and well point dewatering for pipeline point repairs are separate pay items.

The quantity to be paid under this item will be in accordance with each (EA) pipe size to be repaired as noted in the contract pay items.

PAY ITEM	DESCRIPTION	UNITS
328	2" Dia. Pipe Forcemain Point Repair	EA
329	4" Dia. Pipe Forcemain Point Repair	EA
330	6" Dia. Pipe Forcemain Point Repair	EA
331	8" Dia. Pipe Forcemain Point Repair	EA
332	10" Dia. Pipe Forcemain Point Repair	EA

Docusign Envelope ID: AFCB16A4-B390-89EA-8013-04580053D90F

333	12" Dia. Pipe Forcemain Point Repair	EA

PAY ITEMS NO. 334 & 335 – REPLACE MANHOLE RING AND COVER

This pay includes replacement of existing manhole rings and covers in roadway paved areas, or other areas, as directed by the Engineer. The work includes all labor, equipment and material for replacement of manhole rings and covers. The work does not include excavation or surface restoration which, if required, will be paid for, or is part of the work, under other Contract Pay Items.

The quantity to be measured for payment under this Pay Item will be the actual number each of manhole ring and covers replaced completed and accepted.

PAY ITEM	DESCRIPTION	UNITS
334	Replace Manhole Ring & Cover (Asphalt Pavement)	EA
335	Replace Manhole Ring & Cover (Unpaved)	EA

PAY ITEMS NO. 336 – 338 – MANOLE BENCH REPLACEMENT

This pay item includes the replacement of manhole benches and invert channels. The work includes all labor, equipment and material for rebuilding existing manhole inverts and benches as described in the Technical Specifications.

The quantity of manhole bench replacement to be measured for payment under this Pay Item will be the actual number each (EA) of manholes that have manhole inverts and benches rebuilt.

PAY ITEM	DESCRIPTION	UNITS
336	Manhole Bench Replacement, 4' Diameter	EA
337	Manhole Bench Replacement, 5' Diameter	EA
338	Manhole Bench Replacement, 6' Diameter	EA

PAY ITEMS NO. 339 & 340 – ADJUST MANHOLE RING AND COVER TO FINISHED GRADE

This item provides all labor, equipment and materials for adjusting existing manhole risers, frames, and covers. Adjustment includes removal of existing ring and cover and removal or placement of up to 6 courses of brick and reinstalling the existing ring and cover. The work does not include excavation, surface restoration, sheeting or well point dewatering which, if required, will be paid for, or is part of the work, under other Pay Items.

The quantities of manhole rim and cover adjustments to be paid under this item shall be each measured in place, on grade, inspected, and accepted.

PAY ITEM	DESCRIPTION	UNITS
339	Adjust Manhole Ring & Cover to Finished Grade (In Pavement)	EA

Docusign Envelope ID: AFCB16A4-B390-89EA-8013-04580053D90F

340	Adjust Manhole Ring & Cover to Finished Grade (Outside of Pavement)	EA

PAY ITEM NO. 341– FLOWABLE CONCRETE FILL

This item provides all labor, equipment, and materials for placing flowable fill per the Technical Specifications. The quantity of Flowable Concrete Fill to be paid under this item shall be per cubic yard measured in place, inspected, and accepted.

PAY ITEMS NO. 342 – 346 - PAVEMENT REPAIR AND ROAD RESTORATION

This item provides all labor, equipment, and materials for the installation of roadway base and surface course per the Technical Specifications and Contract Drawings. Replacement base material shall be the same as the existing base. Measurement will be based on the actual number of cubic yards of Roadway Base and tons of Superpave Asphalt base and concrete installed, tested, completed, and approved. The weight of the Superpave asphalt base and concrete shall be determined from batch weights, truck scale weights or other methods approved by the Engineer. Delivery tickets, in duplicate, signed by a sworn weigher, must accompany each load of material to the project site. One copy of the delivery ticket must be retained by the Contractor and one copy must be delivered to the City Inspector. The total number of tons reflected in one set of all delivery tickets collected by the Inspector must be the measured pay quantity.

PAY ITEM	DESCRIPTION	UNITS
342	Roadway Base, Lime Rock, Primed, Min. LBR 100, Variable Thickness	CY
343	Roadway Base, Crushed Concrete/Graded Aggregate, Min. LBR 100, Variable Thickness	CY
344	Superpave Asphalt Base, Type B 12.5, Variable Thickness	TN
345	Superpave Asphalt Concrete, Type SP 9.5, Fine, Traffic Level C, Variable Thickness	TN
346	Superpave Asphalt Concrete, Type SP 12.5, Fine, Traffic Level C, Variable Thickness	TN

PAY ITEMS NO. 347 - 349 – DRIVEWAY RESTORATION

Payment for all work included under this Pay Item will be made at the Contract unit price bid per square yard of driveway installed as shown in the Contract Drawings and as listed on the Bid Form. Measurement will be based on the actual number of square yards of driveway installed, tested, completed and approved. Payment shall represent full compensation for all labor, materials and equipment for cutting the edges of existing driveways, compacting subgrade, furnishing and installing the shell, asphaltic concrete, concrete, or decorative block and all incidentals necessary to complete the driveway restoration as shown on the Contract Drawings and included in the Specifications. No payment for restoration of a private driveway outside the right-of-way shall be made under this Pay Item.

Docusign Envelope ID: AFCB16A4-B390-89EA-8013-04580053D90F

PAY ITEM	DESCRIPTION	UNITS
347	Pavement, Cement Concrete, 6" Min Thickness (Driveways)	SY
348	Pavement, Cement Concrete, 8" Thick	SY
349	Driveway Restoration, In Kind, Decorative Block	SY

PAY ITEMS NO 350 - 352 – MILLING OF EXISTING ASPHALT

Payment for all work included under this Pay Item will be made at the Contract unit price bid per square yard of asphalt milling within the Contract Drawings and as listed on the Bid Form. Measurement will be based on the actual number of square yards of milling installed, tested, completed and approved. The measurement will be from face of curb to face of curb or as specified, but not greater than the width of the existing roadway prior to construction. Payment will include the milling of the asphaltic concrete in accordance with these Specifications. No payment for milling of a private driveway within or outside the right-of-way shall be made under this Pay Item.

PAY ITEM	DESCRIPTION	UNITS
350	Milling Existing Asphalt Pavement, 1/2" Average Depth	SY
351	Milling Existing Asphalt Pavement, 3/4" Average Depth	SY
352	Milling Existing Asphalt Pavement, 1" Average Depth	SY

PAY ITEMS NO. 353 – 356 – CURB AND GUTTER REPLACEMENT

Payment for all work included in this Pay Item will be made at the applicable Contract unit price bid per linear foot for removal of existing curbing and for furnishing and placing FDOT Type D or F curb and gutter, Miami curb, or Valley gutter as shown on the Contract Drawings and listed on the Bid Form. Measurement will be per actual number of linear feet of curbing installed. Payment shall represent full compensation for removal of existing curb and all labor, material and equipment for compacting subgrade, forming, furnishing, placing the concrete, and finishing as specified and all incidentals necessary for completion of this Pay Item, in accordance with FDOT specifications.

PAY ITEM	DESCRIPTION	UNITS
353	Curb & Gutter, Concrete, FDOT Type D	LF
354	Curb & Gutter Concrete, FDOT Type F	LF
355	Curb & Gutter, Concrete, Miami Curb	LF
356	Valley Gutter, Concrete, PCED Index 1315	LF

PAY ITEMS NO. 357 & 358 – CONCRETE SIDEWALKS

Payment for all work included under this Pay Item will be made at the Contract unit price bid per square foot of concrete sidewalk installed as shown in the Contract Drawings and as listed on the

Docusign Envelope ID: AFCB16A4-B390-89EA-8013-04580053D90F

Bid Form. Measurement of sidewalk restoration will be per the actual number of square feet of sidewalk replaced. Payment shall represent full compensation for all labor, materials and equipment for cutting the edges of existing concrete, compacting subgrade, furnishing and installing the concrete and all incidentals necessary to complete the sidewalk restoration as shown on the Contract Drawings in accordance with FDOT Specifications where applicable.

PAY ITEM	DESCRIPTION	UNITS
357	Sidewalk, Concrete, 4" Min. Thickness, Remove and Replace	SF
358	Sidewalk, Concrete, 6" Min. Thickness, Remove and Replace	SF

PAY ITEM NO. 359 – SODDING

Payment for all work included under this Pay Item will be made at the Contract unit price bid per square yard of sod installed as shown in the Contract Drawings and as listed on the Bid Form. Measurement of sodding will be per the actual number of square yards of sod installed. Payment shall represent full compensation for all labor, materials and equipment for furnishing and installing the sod and all incidentals necessary to complete the work as shown on the Contract Drawings in accordance with FDOT Specifications where applicable.

END OF SECTION

Docusign Envelope ID: AFCB16A4-B390-89EA-8013-04580053D90F

THIS PAGE INTENTIONALLY LEFT BLANK

Docusign Envelope ID: AFCB16A4-B390-89EA-8013-04580053D90F

SECTION 3 - SUBMITTALS

3.01 GENERAL

When used in the Contract Documents, the term "Shop Drawings" shall be considered to mean Contractor's plans for material and equipment which become an integral part of the Project. These drawings shall be complete and detailed. Shop Drawings shall consist of fabrication, drawings, setting drawings, schedule drawings, manufacturer's scale drawings and wiring and control diagrams. Cuts, catalogs, pamphlets, descriptive literature and performance and test data, shall be considered only as supportive to required Shop Drawings as defined above.

Data on materials and equipment shall include, without limitation, materials and equipment lists, catalog sheets, cuts, performance curves, diagrams, materials of construction and similar descriptive material. Materials and equipment lists shall give, for each item thereon, the name and location of the supplier or manufacturer, trade name, catalog reference, size, finish and all other pertinent data. Submittal distribution will be by electronic submittal as coordinated during the Preconstruction Conference.

3.02 CONTRACTOR RESPONSIBILITIES

The Contractor shall submit to the City and Engineer for review and acceptance: working drawings, shop drawings, test reports and data on materials and equipment, and material samples (hereinafter in this section called samples) as are required for the proper control of work, including, but not limited to those working drawings, shop drawings, data and samples for materials and equipment specified elsewhere in the Specifications and in the Contract Drawings.

Drawings and schedules shall be checked and coordinated with the work of all trades involved before they are submitted for review by the City and the Engineer and shall bear the Contractor's stamp of approval and original signature as evidence of such checking and coordination. Drawings or schedules submitted without this stamp of approval and original signature shall be returned to the Contractor for resubmission.

If drawings show variations from Contract requirements because of standard shop practice or for other reasons, the Contractor shall describe such variations in his letter of transmittal. If acceptable, proper adjustment in the contract shall be implemented where appropriate. If the Contractor fails to describe such variations, he shall not be relieved of the responsibility of executing the work in accordance with the Contract, even though such drawings have been reviewed.

For all mechanical and electrical equipment furnished, the Contractor shall provide a list including the equipment name and address and telephone number of the manufacturer's representative and service company so that service and/or spare parts can be readily obtained.

All manufacturers or equipment suppliers who proposed to furnish equipment or products shall submit an installation list to the City along with the required shop drawings. The installation list shall include at least five installations where identical equipment has been installed and have been in operation for a period of at least one (1) year.

No materials or equipment shall be ordered, fabricated or shipped or any work performed until the Engineer reviews and returns to the Contractor the submittals as acceptable according to the

Docusign Envelope ID: AFCB16A4-B390-89EA-8013-04580053D90F

submittal review codes in Section 3.04.

3.03 SUBMITTAL NUMBERING

When submitting shop drawings or samples, utilize a unique numbering system of the Contractors choice. Subsequent resubmittals of a revised submittal shall be denoted with a letter, A-Z, indicating the resubmission of the same drawing (i.e. A=2nd submission, B=3rd submission, C=4th submission, etc.).
An example of a submittal numbering would be as follows: Submittal No. 5A - HDPE Pipe 6.03

1. 5A is the second submission of the 5th shop drawing submitted for the project
2. HDPE Pipe is the subject of the submittal
3. 6.05 is the Specification Section for HDPE Pressure Pipe

3.04 SUBMITTAL REVIEW

Submittals shall be transmitted in sufficient time to allow the Engineer at least twenty (20) working days for review and processing. The review of shop drawings, data and samples will be for general conformance with the design concept and Contract Documents. An acceptance of a submittal shall be interpreted to mean that the Engineer has no specific objections to the submitted material, subject to conformance with the Contract Drawings and Specifications. This is not to be construed as permitting any departure from the Contract requirements, relieving the Contractor of responsibility for any errors, including details, dimensions, and materials, or approving departures from details furnished by the City, except as otherwise provided herein.

Submittals will be returned to the Contractor under one (1) of the following codes:

A. "NO EXCEPTIONS TAKEN" is assigned when there are no notations or comments on the submittal. When returned under this code the Contractor may release the equipment and/or material for manufacture.
B. "CORRECTIONS NOTED". This code is assigned when a confirmation of the notations and comments IS NOT required by the Contractor. The Contractor may release the equipment or material for manufacture; however, all notations and comments must be incorporated into the final product.
C. "REVISE AND RESUBMIT". This code is assigned when notations and comments are extensive enough to require a resubmittal of the package. The Contractor may release the equipment or material for manufacture; however, all notations and comments must be incorporated into the final product. This resubmittal is to address all comments, omissions and non-conforming items that were noted. Resubmittal is to be received by the Engineer within 15 Calendar Days of the date of the Engineer's transmittal requiring the resubmittal.
D. “REJECTED" is assigned when the submittal does not meet the intent of the Contract Documents. The Contractor must resubmit the entire package revised to bring the submittal into conformance. It may be necessary to resubmit using a different manufacturer/vendor to meet the Contract Documents.
E. “Filed as Received” is assigned when the submittal is for informational purposes only. No review or comments will be provided by the Engineer.

END OF SECTION

Docusign Envelope ID: AFCB16A4-B390-89EA-8013-04580053D90F

SECTION 4 – AS-BUILT DRAWINGS

4.01 MINIMUM AS-BUILT DRAWING STANDARDS FOR ALL AS-BUILT DRAWINGS

For all elements of construction, As-Built Drawings shall be submitted to at least the level of detail in the contract documents. It is anticipated that the original contract documents shall serve as at least a background for all record information. Original drawings in CAD format may be requested by the City.

Project data points shall contain both horizontal and vertical data relative to the FL Florida State Plane, West Zone, US Foot. Vertical datum is NAVD 1988. All elevations shall be in feet and tenths, referenced to NAVD 1988. Each sheet of the As-Built Drawings shall have the title “AS-BUILT DRAWING” printed in large bold lettering near the title block and a date corresponding to the date the as-built drawing was issued. As-Built Drawings notes, and information shall be bold or italics to identify them as As-Built information.

4.02 AS-BUILT DRAWINGS PREPARATION

The As-Built Drawings shall show the name, address, and phone number of the Contractor. Each drawing shall be certified by a responsible representative of the Contractor and dated. As-built information shall be recorded currently with construction progress and work shall not be concealed until required information is recorded. Properly prepared As-Built Drawings shall be certified by a Professional Engineer or Surveyor registered to the state of Florida, employed by the Contractor.

The As-Built Drawings shall at a minimum legibly include the following:

A. All underground piping with elevations and dimensions. Changes to piping location. Horizontal and vertical locations of underground utilities and appurtenances referenced to permanent surface improvements. Actual installed pipe material, size, class, etc.

B. Locations of drainage ditches, swales, water lines and force mains shall be shown every 200 feet (measured along the centerline). Dimensions at these locations shall indicate distance from centerline of right-of-way to the facility.

C. All horizontal locations, if not in the right-of-way, must relate to easement.

D. Field changes of dimension and detail.

E. Changes made by Field Order or by Change Order.

F. Details not on original Contract Drawings.

G. Equipment and piping relocations.

H. Locations of all valves, air release valves, fire hydrants, manholes, water and sewer services, water and force main fittings, underdrain cleanouts, catch basins, junction boxes

Docusign Envelope ID: AFCB16A4-B390-89EA-8013-04580053D90F

and any other structures located in the right-of-way or easement, shall be located by elevation and by station and offset based on intersection P.I.'s and centerline of right-of-way. For facilities located on private roads, the dimensioning shall be from centerline of paving or another readily visible baseline.

I. Elevations shall be provided for all manhole rim and inverts; junction box rim and inverts; catch basin rim and inverts; and baffle, weir and invert elevations in control structures. Elevations shall also be provided at the PVI's and at every other lot line or 200 feet, whichever is less, of drainage swales and ditches. Benchmarks and elevation datum shall be indicated.

J. Slopes for pipes and ditches shall be recalculated, based on actual field measured distances, elevations, pipe sizes, and type shown. Cross section of drainage ditches and swales shall be verified.

K. Centerline of roads shall be tied to right-of-way lines. Elevation of roadway centerline shall be given at PVI's and at all intersections.

L. As-Built Drawings shall show bearings and distances for all right-of-way and easement lines, and property corners.

M. Sidewalks, fences, and walls, if installed at the time of initial as-built drawing submittal, shall be located every 200 feet or alternate lot lines, whichever is closer. Dimensions shall include distance from the right-of-way line and the back of curb and lot line or easement line.

N. Allowable tolerance shall be ± 6.0 inches for horizontal dimensions. Vertical dimensions such as the difference in elevations between manhole inverts shall have an allowable tolerance of ± 1/8 inch per 50 feet (or part thereof) of horizontal distance up to a maximum tolerance of ± 2 inch.

Specifications and Addenda shall be legibly marked to record manufacturer, trade name, catalog number and supplier of each product and item of equipment actually installed and changes made by Field Order or by Change Order.

4.02.01 REQUIREMENTS FOR RECLAIMED WATER MAINS AND FORCE MAINS

In addition to that specified above, the following information shall be provided on the As-Built Drawings.

A. Location (vertical and any horizontal) at intervals not to exceed two hundred (200) feet and at all locations where the direction changes by more than ten (10) degrees.

B. Pipe size, material, and dimension ratio.

C. Location of air release valve.

D. Detailed location of valves (horizonal).

Docusign Envelope ID: AFCB16A4-B390-89EA-8013-04580053D90F

E. Elevations shall be provided on the top of operating nuts for all water and force main valves.

F. Reclaimed water service connection location based on distance from main line and property line for each designed meter.

G. Horizontal Directional Drilling (HDD) locations and elevations shall be shown on the As-Built Drawings. The beginning, ending, and surface locations shall be indicated as well as the horizontal and vertical location at least every 25 linear feet along the pipe as provided in the HDD Contractor's certified report and bore log.

All top of pipe elevations shall be accompanied by a finished grade elevation at the same location. Horizontal location of the pipe shall be defined using ties to back of curb and nearest property corner, property line or permanent control point.

4.02.02 REQUIREMENTS FOR GRAVITY SEWER

In addition to that specified above, the following information shall be provided on the As-Built Drawings.

A. Manhole rim and invert elevations (include pipe inverts).

B. Manhole horizontal location (i.e. dimension from right-of-way line or permanent control point.)

C. Service laterals located from the nearest downstream manhole. These dimensions shall be provided by on-site inspections or televising of the sewer following installation.

D. Distance between manholes.

Size and material of all pipe.

4.02.03 REQUIREMENTS FOR WASTEWATER PUMP/LIFT STATIONS

In addition to that specified above, the following information shall be provided on the As-Built Drawings.

A. Location ties back to back of curb and nearest property corner or permanent control point.

B. Wet well invert elevations.

C. Pipe invert elevations.

D. Valve vault inverts.

E. Top of slab elevations.

Docusign Envelope ID: AFCB16A4-B390-89EA-8013-04580053D90F

F. Pump make and model, horsepower, impellor size, design point.

G. Operating set point elevations

4.03 AS-BUILT DRAWINGS SUBMITTAL

Prior to substantial completion and prior to starting the bacteria testing of water lines, Contractor shall deliver electronic As-Built Documents and As-Built Drawings to the City and the Engineer for review. If there are any required changes or additions, these shall be completed and resubmitted for review. Signed and sealed As-Built Documents and As-Built Drawings shall be submitted prior to final pay application to the City and the Engineer, both electronically and in hard copy paper format. Up to six (6) copies shall be provided at the City's request.

The Contractor shall employ a Professional Engineer or Surveyor registered in the State of Florida to verify survey data and properly prepare As-Built Drawings. As-Built Drawings shall be certified by the professional(s) (Engineer or Surveyor licensed in Florida), as stipulated by the Land Development Ordinance and submitted in electronic format and up to six (6) hardcopies signed and sealed by a Florida registered surveyor and mapper.

AutoCAD drawings shall be in DWG or DXF form. All fonts, line types, shape files, external references, or other pertinent information used in the drawing and not normally included in AutoCAD shall be included on the media with a text file or attached noted as to its relevance and use.

Accompany submittal with transmittal letter, containing:

A. Date.
B. Project title.
C. Contractor's name and address.
D. Title and number of each As-Built Document.
E. Signature of Contractor or his authorized representative.

Note: The data required to properly prepare these As-Built Drawings shall be obtained at the site, at no cost to the City by the responsible design professional or his/her duly appointed representative. The appointed representative shall be a qualified employee of the responsible design professional or a qualified inspector retained by the responsible design professional on a project-by-project basis.

END OF SECTION

Docusign Envelope ID: AFCB16A4-B390-89EA-8013-04580053D90F

SECTION 5 - CONCRETE, MASONRY, AND REINFORCING STEEL

5.01 GENERAL

The Work in this section includes furnishing, placing, finishing, and curing all reinforced and plain concrete, prestressed concrete, reinforcing steel, welded wire fabric, brick, masonry block, mortar, and related work. Brick used for paving and hexagon block used for sidewalks are not included in this section.

5.02 PORTLAND CEMENT CONCRETE

Portland cement concrete shall conform to the applicable requirements of the FDOT-SSRBC Sections 346, 347, and 921.

Class IV concrete shall be used for all concrete in contact with, or over, salt or brackish water.

Concrete used for structures in contact with sewage shall be mixed from Type II Portland cement containing the lowest calcium thiosulfate available as specified in AASHTO M 85.

Concrete shall meet the following minimum 28-day compressive strength:

Miscellaneous concrete (thrust blocks, pipe encasement, etc.)	2,500 psi
Concrete curb/gutter/sidewalk/pavement	3,000 psi
Cast-in-place/precast structures	4,000 psi
Prestressed structures	5,000 psi

5.03 REINFORCING STEEL

Reinforcing steel shall conform to ASTM A 615, Grade 60 deformed bars and to the applicable requirements of FDOT-SSRBC Sections 415 and 931.

Reinforcing steel shall not be coated, except as specifically specified on the Contract Drawings.

All welded wire fabric shall conform to ASTM A 497 (deformed) or ASTM A 185 (plain) and to the applicable requirements of FDOT-SSRBC Article 415-6.

5.04 FIBROUS CONCRETE REINFORCEMENT

Fibrous concrete reinforcement may be used, where shown or approved, in lieu of welded wire fabric for shrinkage and thermal contraction/expansion in concrete pavement, driveway, and sidewalk.

Fibrous concrete reinforcement shall conform to ASTM C 1116, ASTM C 94, and ASTM E 119-83.

Fibrous concrete reinforcement shall be 100 percent virgin polypropylene fibrillated material mixed with concrete at a minimum of 1.5 pounds per cubic yard of concrete.

Docusign Envelope ID: AFCB16A4-B390-89EA-8013-04580053D90F

5.05 PLACEMENT OF REINFORCEMENT

Reinforcing steel placement shall conform to the applicable requirements of FDOT-SSRBC Articles 350-7 and 415-5.

The following minimum concrete cover shall be provided for all reinforcement:

Concrete cast against and permanently exposed to earth	3-inch
Concrete exposed to earth or weather	
Primary reinforcement	2-inch
Stirrups, ties, and spirals	1 1/2-inch
Concrete deck slabs, top and bottom	2-inch
Concrete not exposed to earth or weather	
Primary reinforcement	1 1/2-inch
Stirrups, ties, and spirals	1-inch

For bundled bars, the minimum concrete cover shall be equal to the equivalent diameter of the bundle, but need not be greater than 2-inch, except against and permanently exposed to earth, in which case the minimum cover shall be 3-inch.

Minimum concrete cover shall be increased in corrosive environment areas.

5.06 PLACEMENT OF CONCRETE

Placement of Portland cement concrete shall conform to the applicable requirements of FDOT-SSRBC Article 400-7.

Unless specific permission is granted prior to each occurrence, no concrete shall be delivered to the job site before 7:30 a.m. or after 4:30 p.m. No concrete shall be placed until the reinforcing steel placement has been inspected and approved by the Engineer.

5.07 CURING OF CONCRETE

Curing of Portland cement concrete shall conform to the applicable requirements of FDOT-SSRBC Article 520-8.

5.08 FINISHING OF CONCRETE

Finishing of Portland cement concrete shall conform to the applicable requirements of FDOT-SSRBC Article 400-15.

5.09 CONCRETE BRICK

Concrete brick for use in drainage structures and where shown on the Contract Drawings shall be approximately 3 5/8-inch by 7 5/8-inch by 2 1/4-inch in size and shall conform to ASTM C 55, Grade N-II or S-II.

Docusign Envelope ID: AFCB16A4-B390-89EA-8013-04580053D90F

5.10 CLAY BRICK

Brick shall be sound, hard, and uniformly burned regular and uniform in shape and size or compact texture and conforming to ASTM C 32, "Specification for Sewer and Manhole Brick (Made from Clay or Shale) Grade MS or MM."

5.11 MASONRY BLOCK

Load bearing units shall be hollow or solid, as shown on the Contract Drawings, and shall conform to ASTM C 90, Type I, 8-inch by 16-inch or 4-inch by 16-inch nominal face dimension.

Non-load bearing units shall conform to ASTM C 129, Type I, 8-inch by 16-inch or 4-inch by 16-inch nominal face dimension.

Horizontal continuous joint reinforcement shall be provided at every other joint. Reinforcement shall be a minimum of #9 gage steel, Grade 50. Wire shall be hot-dip galvanized, conforming to ASTM A 153, Class B-2 (1.5 ounce per square foot of wire surface) for zinc coating after prefabrication into units. Mortar coverage shall be not less than 5/8-inch on joint faces exposed to exterior, and not less than 1/2-inch elsewhere.

5.12 MORTAR

Mortar shall consist of a mixture of cementitious materials, aggregate, and water. All proportions shall be by volume and/or weight. Masonry cement shall conform to ASTM C 91 and C 270. Fine aggregate and Portland cement shall conform to the applicable requirements of FDOT-SSRBC Sections 902 and 921 respectively. Mortar shall have a minimum compressive strength of 1,500 psi.

5.13 GROUT

Grout shall be identical to mortar in all respects.

END OF SECTION

Docusign Envelope ID: AFCB16A4-B390-89EA-8013-04580053D90F

THIS PAGE INTENTIONALLY LEFT BLANK

Docusign Envelope ID: AFCB16A4-B390-89EA-8013-04580053D90F

SECTION 6 – EXCAVATION AND BACKFILL

6.01 GENERAL

The Work in this section includes furnishing all labor, materials, tools, and equipment for excavation and backfill of roadways, sidewalks, curbs, driveways, pipelines, and structures. The Work also includes removing and disposing of leftover material and furnishing and placing off-site fill.

Bidders shall examine the site of the Work, make their own additional soil borings and tests, and make their own determination of the character of materials and the conditions to be encountered on the Work; their Bid shall be based upon their own investigation.

6.02 TRENCH SAFETY

The Contractor shall be responsible for maintaining safety at each excavation. The Contractor shall adhere to the Florida Trench Safety Act (FS 90-96), OSHA trench excavation safety standards (29 CFR, Subpart P, 1926.650), and OSHA trench excavation shielding, sloping, or sheeting requirements. Inspections required by OSHA trench excavation safety standards shall be provided by the Contractor's "competent person," as defined by OSHA 29 CF, Subpart P, 1926. The Contractor's "competent person" shall be identified at the Preconstruction Conference.

The Contractor certifies by submitting the bid and subsequently executing this Contract, that all trench excavation done within his control shall be accomplished in strict adherence with OSHA trench safety standards, the Florida Trench Safety Act, and public safety.

The Contractor also agrees to produce or obtain, prior to award of the subcontracts, identical certification from subcontractors who will perform trench excavation, and to retain such certification for at least 3 years following Final Acceptance.

The Contractor shall consider all available geotechnical information when designing the trench excavation safety system. If sufficient geotechnical information is not available, the Contractor may obtain such to support the requirements set forth above, at no additional cost to the City.

6.03 WORK IN WETLANDS, MANGROVES, AND PRESERVATION AREAS

Strict adherence to all permits is required. Damage to wetlands, periodically wet areas, mangroves, and preservation areas is prohibited. Any such damage by the Contractor shall be duly rectified at no additional cost to the City and as approved by the regulatory agencies.

6.04 CLEARING AND GRUBBING

All clearing and grubbing Work shall conform to all applicable requirements of FDOT-SSRBC Section 110 "Clearing and Grubbing" except as modified herein.

The Contractor shall remove only those trees and bushes necessary to complete the specified Work. Not all the trees and bushes have been located or shown on the Contract Drawings. The Contractor shall flag those trees and bushes to be removed. All other trees and bushes shall be protected per Specifications.

Docusign Envelope ID: AFCB16A4-B390-89EA-8013-04580053D90F

All roots, stumps, and other debris shall be removed to a depth not less than 12 inches below a bearing surface. The disturbed surface shall be backfilled, graded, and compacted as specified.

No tree or bush shall be removed without the review and acceptance of the Engineer. The Contractor shall obtain all necessary City or County permits for each tree to be removed. Tree removal shall conform to the provisions of the Specifications.

6.05 ROADWAY EXCAVATION

The extent of excavation shall be as shown on the Contract Drawings or otherwise approved by the City and shall include roadway excavation and/or filling and grading, together with the removal of trees, bushes, existing asphalt, concrete, or other material, as required to facilitate construction and restoration as directed by the City.

All excavation Work shall conform to all applicable requirements of FDOT-SSRBC Section 120 “Excavation and Embankment” except as modified herein.

6.06 TRENCH EXCAVATION

Mechanical excavation shall be terminated at least 2 inches above the proposed pipe bed and trench bottom, then shaped and compacted so as to provide uniform bearing on the barrel of the pipe. Particular care shall be taken to recess the bottom of the trench at the bell of the pipe to relieve the bell of all load.

A minimum trench width shall be maintained, allowing room for the jointing and proper compaction of the backfill. If material is encountered that is unsuitable in the opinion of the Engineer, it shall be removed by the Contractor and replaced with acceptable material compacted in place as specified. In the event the Contractor excavates below the elevation required without approval, the Contractor shall backfill with approved materials compacted to obtain a suitable trench bottom, all to the satisfaction of the Engineer and at no additional cost to the City.

The amount of open trench shall be limited so that no more than 100 feet of open trench in advance of the backfilling operation will remain at the end of that working day. All open trench shall be protected by the Contractor with barriers, warning devices, and traffic control devices, which shall be kept in the correct position, properly directed, anchored when required, and clearly visible at all times. The barriers, warning devices, and traffic control devices shall be suitably lighted at all times when vehicular traffic lights are required.

6.07 STRUCTURE EXCAVATION

Excavation shall be of the size and depth required for construction of structures and their foundations. Unsuitable material encountered shall be removed to the depth required to obtain sound foundation material or as ordered by the Engineer. Over-excavated areas shall be filled with approved backfill material compacted as specified, at no additional cost to the City.

Unsuitable existing soil shall be removed and replaced with compacted material, as approved by the Engineer and as specified in the subsection herein headed "Excavation of Unsuitable Material."

Docusign Envelope ID: AFCB16A4-B390-89EA-8013-04580053D90F

6.08 EXCAVATION OF UNSUITABLE MATERIAL

Unsuitable material shall include rock, concrete, and boulders. Unsuitable soft material shall include logs, muck, other soft soils, organic soils, and other soils as specified or as ordered by the Engineer to be unsuitable.

All excavation of unsuitable material shall conform to all applicable requirements of FDOT-SSRBC Section 120 “Excavation and Embankment” except as modified herein.

Unsuitable material encountered below or within the roadway stabilized subgrade, the trench bottom, or a structure bottom, shall be removed by the Contractor to the limits established by the Engineer and disposed of from the Work area at an approved disposal area. Unsuitable material shall be replaced with approved material and compacted as specified.

No additional payment will be made for backfill material obtained from any source and used to replace any unsuitable material except as otherwise specified.

6.09 SHEETING, SHIELDING, AND SLOPING

All excavations shall be properly sheeted, shielded, or sloped to the required slope to furnish safe working conditions, to prevent shifting of material, to prevent damage to structures or other Work, and to avoid delay to the Work, all in accordance with applicable safety and health regulations. The minimum sheeting and shielding for trench excavations shall meet the general trenching requirements of the Florida Trench Safety Act and OSHA standards.

The sheeting and shielding shall be of adequate strength and quantity for the purpose intended. Any sheeting extending below the level of above the top of pipeline shall be cut off as ordered by the Engineer and left in place. In addition, the Engineer may order the Contractor to cut off and leave in place any sheeting, shielding, or other approved support where required to protect construction, property, or existing facilities or utilities.

Damages resulting in the installation or removal of sheet piling shall be rectified by the Contractor at no additional cost to the City.

6.10 DEWATERING

A. All pipeline and appurtenances shall be laid entirely in a dry trench. All foundations and structure walls shall be constructed or installed in a dry excavation.

B. Before commencing any excavation at the site of the Work, the Contractor shall submit to the Engineer for review, the methods, equipment, and arrangement of facilities proposed for dewatering and disposal of water at the site and of all water entering any excavation or other part of the Work from any source whatsoever.

C. Water discharged from dewatering equipment shall be carried into surface drainage facilities except water quality treatment systems and shall not be discharged into sanitary sewer lines. The Contractor shall prevent water from puddling in streets or on private properties. The depositing of dirt in storm drains and ditches and staining of existing facilities shall not be permitted.

Docusign Envelope ID: AFCB16A4-B390-89EA-8013-04580053D90F

D. Adequate standby facilities shall be provided to ensure that the excavation will be kept dry in the event of power failure or mechanical breakdown. Facilities for the removal and disposal of water shall be of sufficient capacity to keep the excavation dry under all circumstances with one-half of the facilities out of service. If well points are used, provision shall be made for removing and resetting individual well points without taking the system of which they are a part out of service.

E. The City reserves the right to require the Contractor to replace noisy equipment in order to keep disturbance to a minimum.

F. The cost of dewatering and disposal of water shall be included in the unit quantity for each appropriate item bid.

G. Refer to the Specifications for requirements concerning encountered groundwater contaminates.

6.11 BORROW MATERIAL

Any borrow excavation Work shall consist of the excavation and satisfactory utilization of material from areas provided by the Contractor when necessary material is not available from the normal excavation or grading operations. This Work shall conform to DOT-SSRBC Section 120 “Excavation and Embankment” except as modified herein.

If additional fill material is required, it shall be City approved material supplied and compacted by the Contractor. All compaction under roadway, alley, driveway, curb, walk, or other improved surface shall be to a density as specified in the Contract Documents. Unless otherwise directed by the City, all material not required for construction shall be removed from the premises and disposed of by the Contractor.

6.12 BEDDING MATERIAL

A. Where shown, ordered, or required, the Contractor shall place bedding material prior to placing pipelines, structures, or slabs. Bedding material may be either excavated approved native sand, concrete sand, gravel, or reclaimed concrete.

B. Off-site bedding material shall be sand or gravel. Sand bedding material shall be a clean concrete sand of uniform gradation between sieve sizes No. 4 and No. 50. All particles shall pass a 3/8-inch sieve and no particles shall pass a No. 100 sieve.

C. Gravel bedding material shall meet the requirements of ASTM C33 and shall be coarse aggregate, DOT Size No. 67 (3/4-inch to No. 4) or approved equal.

D. Reclaimed concrete bedding material shall be graded to meet the size requirements as specified for gravel bedding.

E. Bedding material, where required, shall be placed in lifts and compacted in a manner to achieve the specified density as specified and/or as shown.

F. If gravel bedding is used, an impermeable groundwater barrier shall be placed at 100-foot intervals in the gravel bedding. The impermeable groundwater barrier shall consist of a 10

Docusign Envelope ID: AFCB16A4-B390-89EA-8013-04580053D90F

mil sheet of polyethylene covering the full cross sectional area of the gravel, embedded 6 inches into the trench sides and bottom, and extending to the top of the gravel. The barrier shall be offset a minimum of 2 feet from any culvert or pipe joint. Ends and splice points shall be lapped a minimum of 12 inches.

6.13 STRUCTURAL SLAB BEDDING

Structural slabs for manhole bases, footings, and similar structures shall be placed on approved compacted bedding material and leveled as specified and/or as shown.

6.14 BACKFILL MATERIAL

Backfill material shall consist of earth, loam, sandy clay, sand, gravel, soft shale, or other materials, free from organic materials, large clods of earth, or stones. Backfill material shall be either soil classification A-1, A-2 or A-3, per AASHTO M-145, and shall be free of organic matter, lumps of clay or marl, muck, compressible materials, and rock exceeding 2.5 inches in diameter. Broken concrete, masonry, rubble or other similar materials shall not be used as backfill.

6.15 BACKFILL COMPACTION

All backfill shall be compacted as specified herein and shall meet the following minimum density as determined by the AASHTO T-180 method for backfill outside the right-of-way and in City streets, and by the AASHTO T-99 method if in County or FDOT right-of-way.

AASHTO T-180 Method C or D will be used for stabilized subgrade and base compaction tests, and Method A or B will be used for backfill testing, or as directed by the Engineer or jurisdiction.

	T-180	T-99
Roadway stabilized subgrade	98%	N/A*
Roadway base	98%	N/A*
Curb base	98%	N/A
Sidewalk and driveway base	98%	N/A
Pipe bedding	98%	100%
Pipe backfill - under pavement	98%	100%
Pipe backfill - under grass	95%	100%
Structure base slabs	100%	N/A
Structure backfill	98%	N/A

*Roadway stabilized subgrade and base material shall meet LBR requirements as specified in the Contract Documents.

6.16 BACKFILLING OF TRENCH

Backfilling shall be accomplished with suitable material and shall commence only after the pipelines have been laid and tentatively accepted by the City. The space between the pipe and the sides of the trench shall be packed full by hand-shoveled earth free from lumps or debris.

Docusign Envelope ID: AFCB16A4-B390-89EA-8013-04580053D90F

The backfill material shall be placed in 6-inch lifts and compacted, using approved tampers to the required compaction, to a point 12 inches over the top of the pipe. The remaining backfill (under areas other than roadways) shall be placed in uniform lifts not greater than 12 inches thick (or less as approved for mechanical equipment available) and tamped to the required compaction. Backfill under roadways shall be compacted in 6-inch lifts.

Where trenches are improperly backfilled, or where settlement occurs, the trenches shall be reopened to the depth required for proper compaction, refilled and compacted, and the surface restored to the grade and compaction, mounded over and smoothed off.

6.17 BACKFILLING STRUCTURES

Backfill around structures shall be of suitable job-excavated material, suitable off-site fill material, or other material approved by the Engineer. Such backfill shall extend from the bottom of the excavation or top of bedding to the bottom of pavement base course, the bottom of the subgrade for lawns or lawn replacement, the top of the existing ground surface, or to such other grades as may be shown or required.

The backfill shall be placed in uniform lifts not greater than 12 inches thick, and thoroughly compacted in place.

6.18 BACKFILLING UNDER ROADWAYS

Backfill placed under roadways and other paved surfaces shall be compacted in 6 -inch lifts and thoroughly compacted in place, with suitable equipment as specified herein.

6.19 DISPOSING OF LEFTOVER MATERIAL

The Contractor shall bring the surface to the same level as existed prior to the excavation. All leftover material shall be hauled from the site and disposed of by the Contractor. Leftover material shall not be stored in or along rights-of-way or easements.

6.20 ADJACENT FACILITIES

The Contractor shall be responsible for the protection, removal, and replacement of all adjacent structures, utilities, trees, shrubbery, curbs, culverts, headwalls, fences, signs, and other miscellaneous structures encountered during the course of the Work.

6.21 TEMPORARY SUPPORTS

Temporary supports for 16-inch and larger pressure and gravity pipes shall be designed by the Contractor and submitted to the City as required by Specifications. Temporary supports that include a structural beam, or other such member(s), shall be designed, signed and sealed by a Professional Engineer.

6.22 FLOWABLE FILL

Where shown on the Contract Drawings, or where ordered by the Engineer, the Contractor shall backfill a void area or an excavation with flowable fill. Flowable fill may be shown, or ordered, to fill

Docusign Envelope ID: AFCB16A4-B390-89EA-8013-04580053D90F

abandoned pipes, abandoned underground steel storage tanks, trench backfill, washout area under structural slabs or behind walls, or other similar locations.

Flowable fill shall be produced and delivered to the site. Placing of flowable fill shall be by chute, pumping, or other approved methods. Flowable fill shall be placed to the designated fill line without vibration. The Contractor shall take all necessary precautions to prevent any damage caused by hydraulic pressure of the fill during placement prior to hardening. Flowable fill shall not be used for pipe bedding and backfill in the zone from the bottom of a pipe to 12 inches above the top of pipe.

Flowable fill shall consist of materials conforming to FDOT-SSRBC Sections as follows:

Cement (Type I or II)	Section 921	"Portland Cement and Blended Cement"
Fly ash (Type F)	Section 929	"Fly Ash, Slag, Microsilica and Other Pozzolanic Materials for Portland Cement Concrete"
Fine aggregate (sand)	Section 902	"Fine Aggregate"
Water	Section 923	"Water for Concrete"

The Contractor shall submit a proposed design mix that will produce a flowable fill meeting the strength requirements specified herein, using the following materials:

	Pounds per cubic yard
Cement (Type I or II)	50 - 200
Fly ash (Type F)	0 - 2,000
Fine aggregate (sand)	2,500 - 3,000
Water	325 - 550
Note: 6-inch to 10-inch slump	

Flowable fill material shall be proportioned to produce a 28-day compressive strength approximately as follows:

	Pounds per square inch
Pipe trench backfill	50 - 150
Fill abandoned pipes or tanks	30 - 150
Under slabs, behind walls	300 - 1000
Note: Density in place 115 to 145 pounds per cubic foot.	

Not more than 60 minutes shall elapse between the start of moist mixing and the placement of the flowable fill.

Flowable fill placed on slopes shall have a reduced slump with a reduction in water and shall be able to be shaped as required.

The Contractor shall place the flowable fill in such a manner as to eliminate all cavities.

Flowable fill shall not be placed in salt water. When within a tidal area, the flowable fill shall be placed immediately after the salt water has receded.

When flowable fill is used adjacent to ductile iron pipe, the pipe shall be polyethylene encased.

Docusign Envelope ID: AFCB16A4-B390-89EA-8013-04580053D90F

END OF SECTION

Docusign Envelope ID: AFCB16A4-B390-89EA-8013-04580053D90F

SECTION 7 - SURFACE RESTORATION

7.01 GENERAL

The Work in this section includes restoring and maintaining pavements and pavement bases, curbing, sidewalks, driveways, and grass surfaces that are disturbed, damaged, or destroyed during the course of the Work under this Contract.

The quality of workmanship and materials used in the restoration shall produce a surface equal to or better than the condition before the Work began.

Prior to restoration, the Contractor shall saw cut and remove all existing pavement within 2 feet of the edge of the excavation, or within such widths as may be ordered by the Engineer.

Compaction of soil and base materials shall be tested using the AASHTO T 180 method.

Surface restoration workmanship and materials shall conform to the applicable sections of the FDOT-SSRBC.

All dirt areas disturbed shall be restored with sod, unless otherwise specified.

7.02 ROADWAY RESTORATION

Where the installation of pipe or structures occurs within an existing roadway, the limits of excavation shall be saw cut leaving a straight and square edge. The upper portion of the trench backfill shall be replaced with a compacted shell, crushed (reclaimed) concrete, or limerock base as shown on the Contract Drawings, and paved to match the surrounding surface. Replacement base material shall be the same as the existing base. Roadway restoration shall conform to the detail for shown in the Contract Drawings.

7.03 TEMPORARY PAVEMENT

Immediately upon completion of backfilling, the pavement surfaces damaged or destroyed shall be temporarily restored by placing a shell (FDOT-SSRBC Section 911), crushed (reclaimed) concrete (FDOT-SSRBC Section 204 applicable sections), or limerock (FDOT-SSRBC Section 911) base on the backfilled, compacted subgrade, and an adequate temporary asphaltic patch as shown or as approved by the Engineer. Shell crushed (reclaimed) concrete, or limerock shall be used as a base for all bituminous pavements.

Temporary work shall be maintained in a suitable and safe condition for traffic until the permanent pavement is laid or until final acceptance of the Work.

7.04 SHELL BASE

Shell base shall be constructed on the prepared subgrade to not less than 98 percent of maximum density, in accordance with the requirements of FDOT-SSRBC Section 911. The minimum compacted thickness of shell base shall conform to the detail shown on the Contract Drawings.

Docusign Envelope ID: AFCB16A4-B390-89EA-8013-04580053D90F

7.05 LIMEROCK BASE

Limerock base shall be constructed on the prepared subgrade to not less than 98 percent of maximum density, in accordance with the requirements of FDOT-SSRBC Section 911. The minimum compacted thickness of limerock base shall conform to the detail shown on the Contract Drawings.

7.06 CRUSHED (RECLAIMED) CONCRETE BASE

Crushed (reclaimed) concrete base shall be constructed on the prepared subgrade to not less than 98 percent of maximum density, in accordance with the requirements of FDOT-SSRBC Section 204. The minimum compacted thickness of crushed (reclaimed) concrete base shall conform to detail shown on the Contract Drawings.

The minimum limerock bearing ratio (LBR) value shall be 150.

7.07 ASPHALTIC CONCRETE PAVEMENT

A prime coat shall be applied to the prepared base in accordance with FDOT-SSRBC Section 300 prior to permanent asphaltic concrete pavement.

Unless specified elsewhere, all permanent asphaltic concrete pavement replacement shall be constructed in accordance with the requirements of FDOT-SSRBC Sections 320, 330, 334, and 337. Surface types and compacted thickness shall conform to the detail shown on the Contract Drawings.

7.08 BRICK PAVEMENT

Construction of brick pavement shall follow the details as shown on the Contract Drawings and City standard practice using City standard paving brick or red clay brick conforming to ASTM C 32, Grade SS with City standard dimensions.

Brick street abutting asphalt pavement shall have a minimum 6-inch-wide flush Type A Header Curb.

7.09 CURB AND GUTTER

All permanent restoration of street curb, or curb and gutter, shall be of the same type and thickness as the curb, or curb and gutter, which abuts. The grade of the restored curb, or curb and gutter, shall conform to the grade of the existing adjacent curb, or curb and gutter, so that positive drainage is maintained.

7.10 CONCRETE SIDEWALK

The restoration and construction of concrete sidewalks shall conform to applicable requirements of FDOT-SSRBC Section 522 and the Contract Drawings and shall be constructed where shown on the Contract Drawings and directed by the City. Sidewalk expansion joints with bituminous filler shall be installed at a maximum of 50-foot intervals on center and struck joints shall be spaced equidistant with walk width (joints wider than 6 feet shall be spaced as directed by the City). Where

Docusign Envelope ID: AFCB16A4-B390-89EA-8013-04580053D90F

new construction is to be tied into existing facilities, the old material is to be removed back to the nearest construction joint, or sawcut to a straight line as directed by the City or Engineer. The soil under sidewalks and driveways shall be compacted to 98 percent of the maximum density.

New sidewalks shall be 4 inches thick. Concrete pour for walk construction shall be made only on dampened subgrade. A soft broom finish shall be given the walk surface as directed by the Engineer.

Sidewalks crossing driveways shall be constructed according to the Specifications for concrete driveways.

Curb ramps for physically handicapped shall be constructed at all locations where sidewalks cross the curb or where directed by the Engineer. Those existing sidewalks which are removed to accomplish associated work as a part of this Project shall be replaced with a curb ramp when the sidewalk crosses the curb. The cost of curb ramps shall be included in the appropriate proposal item for sidewalk restoration.

Where sidewalks are replaced, the replacement shall be the full width of the walk and the minimum length shall be 60 inches. Restoration of adjacent lawn is incidental to sidewalk replacement and no separate payment will be made therefore.

7.11 HEXAGON BLOCK SIDEWALK

The restoration and construction of hexagon block sidewalks shall conform to the details shown on the Contract Drawings and City standard practice using City standard hexagon blocks.

The soil under sidewalks and driveways shall be compacted to 98 percent of the maximum density. New hexagon block sidewalks shall be 2 inches thick.

Curb ramps for physically handicapped shall be constructed at all locations where sidewalks cross the curb, or where directed by the City or Engineer. Those existing sidewalks which are removed to accomplish associated work as a part of this Project shall be replaced with a curb ramp when the sidewalk crosses the curb. The cost of curb ramps shall be included in the appropriate Pay Item for sidewalk restoration.

Where sidewalks are replaced, the replacement shall be the full width of the walk. Restoration of adjacent grass is incidental to sidewalk replacement and no separate payment will be made therefore.

7.12 DRIVEWAY AND PARKING LOT

Except as otherwise specified, all permanent restoration of base and surface of driveways, parking aprons, and sidewalks shall match the materials, thicknesses, elevations, lines, and grades of the existing construction, all to the Engineer's satisfaction. Patching of Portland cement driveway areas will not be allowed between joints or dummy joints.

For areas where streets are to be paved, or where more than 50 percent of the driveway apron is disturbed, concrete or brick driveways shall be replaced in kind. All other driveways, including shell

Docusign Envelope ID: AFCB16A4-B390-89EA-8013-04580053D90F

and dirt, shall be restored with an asphalt concrete surface from the street to the property line or front of sidewalk, as directed by the City or Engineer.

All base compaction under driveways shall be to a minimum density of 98 percent of the maximum density.

7.13 DRIVEWAY - ASPHALT

Residential asphalt driveway restoration shall include 1-inch thick asphaltic concrete surface over 2 inches of compacted sand-asphalt hot mix base, or 5 inches of compacted limerock or shell base.

Commercial asphalt driveway restoration shall be constructed of 1-inch thick asphaltic concrete surface over 8 inches of limerock base compacted in 2 lifts.

7.14 DRIVEWAY - CONCRETE

The restoration and construction of concrete driveways shall conform to applicable requirements of FDOT-SSRBC Section 522 and the Contract Drawings and shall be constructed where shown on the Contract Drawings and directed by the City or Engineer.

Residential concrete driveway restoration shall be 5 inches thick and shall include placing a single layer of 6-inch by 6-inch wire mesh (WWF 6 x 6 - W1.4 x W1.4).

Commercial concrete driveways shall be 6 inches thick with a double layer of 6-inch by 6-inch wire mesh (WWF 6 x 6 - W1.4 x W1.4).

7.15 DRIVEWAY - PEAGRAVEL

Where less than 50 percent of the driveway apron is disturbed, pea gravel driveways shall be restored to match the existing driveway. Pea gravel driveway restoration shall include asphalt treated shell base 5 inches thick after compaction to a minimum density of 98 percent of the maximum.

7.16 DRIVEWAY - SHELL

Where less than 50 percent of the driveway apron is disturbed, shell driveways shall be restored to match the existing driveway. Shell driveway restoration shall be 5 inches thick after compaction to a minimum density of 98 percent.

7.17 GRASS

7.17.01 Sodding

Sod shall be planted as soon as practical after paving, pipeline, or other work has been completed. Sodding shall always be used over seeding.

All work and materials shall meet the applicable requirements FDOT-SSRBC Section 570 (Sodding).

Docusign Envelope ID: AFCB16A4-B390-89EA-8013-04580053D90F

Sodding shall be done as directed by the Engineer, using only material which, in the opinion of the Engineer, is healthy and free of weeds, and (unless specified otherwise by the Engineer) of the same variety predominating at time of removal. Sod may be St. Augustine, Bahia, or other varieties as selected by the Engineer.

Sod shall be planted within 72 hours of being cut. Only moist, green sod having a virile root system may be planted. Sod shall be cut into adjacent sod to provide a smooth surface, and "top dressed" where necessary. Sod shall be rolled or tamped after planting to provide a uniform and consistent grade.

7.17.02 Grass Maintenance

The Contractor shall properly water and otherwise maintain all seeded and sodded areas for a minimum of 60 consecutive calendar days after completion of sodding operations. After the 60 days, and upon receipt of written request from the Contractor, the Engineer will inspect the areas for acceptance by the City. Any area that is washed or eroded, fails to show a uniform stand of healthy, vigorous grassing, or does not appear to be otherwise developing satisfactorily, shall be re-sodded and maintained until suitable for acceptance by the Engineer.

In the event that the stand of grass is found to be contaminated by weeds or other undesirable growth, the Contractor will be required to effectively eliminate such undesirable growth at his own expense.

7.18 EXPANSION JOINT MATERIAL

Expansion joint material for concrete pavement surfaces, including sidewalks and driveways, shall be the bituminous strip type, 1/2-inch thick, and shall conform to applicable requirements of FDOT-SSRBC Section 932.

END OF SECTION

Docusign Envelope ID: AFCB16A4-B390-89EA-8013-04580053D90F

THIS PAGE INTENTIONALLY LEFT BLANK

Docusign Envelope ID: AFCB16A4-B390-89EA-8013-04580053D90F

SECTION 8 – PAINTING

8.01 GENERAL

Painting materials not obtainable from the prime manufacturer shall be obtained from a second source recommended by the prime manufacturer for compatibility. All products furnished shall meet current Federal Regulations for lead, mercury and other heavy metals, as well as current VOC air quality regulations. Products of the following acceptable manufacturers may be used on this project, except where noted otherwise.

A. Ameron – Corrosion Control Division
B. Devoe & Raynolds Company
C. Indurall
D. KopCoat –RPM
E. MAB Paints
F. PPG Industries, Inc.
G. Rust-Oleum Corporation
H. Sherwin-Williams
I. Tnemec Company, Inc.

The Contractor shall paint or provide a protective coating for all interior and exterior wood and metal surfaces, all interior masonry, valves, and all submerged piping and other metal, whether specifically called for or not. In addition, all exposed piping shall be painted and further identified in accordance with other sections of these specifications. Because of their very nature, some areas or items do not require specific painting or coating for protection or appearance. The following generally do not require painting or coating unless specifically noted otherwise or required by manufacture, color coding, insulation from dissimilar metals, insulation from concrete or cement products, or architectural considerations:

A. Non-Ferrous Alloys:

Aluminum
Monel
Stainless Steel

B. Corrosion Resistant Metals:

Chromium Plated Steel
Weathering Steel
Galvanized Steel

C. Non-Metallic Materials:

Exterior Brick
Concrete
Glass

Docusign Envelope ID: AFCB16A4-B390-89EA-8013-04580053D90F

	Plastic &FRP
	PVC
	Porcelain
Pre-Finished Manufactured Items:	Cabinets
	Louvers
	Motor Control Centers
	Panels
	Signs and Nameplates
	Switchgear
	Switchboards
	Transformers
	Tile

D. Electrical Conduits Attached to Unpainted Surfaces.

E. Insulation and Insulation Jackets.

All exposed piping and conduit within the fence enclosure shall be color-coded in accordance with the following Color Coding Schedule:

A.	Electric	Gray
B.	Gas, Oil, Dangerous Materials	Red
C.	Telephone, Telegraph, Television, Communications	Safety Alert Orange
D.	Potable Water	Safety Blue
E.	Treated Sewage	Safety Green

Other paint colors will be selected by the Engineer

All materials shall be pure and first quality. Materials listed shall be the standard for each such type of material. Primers and finish coats shall be compatible and of the same manufacture where possible. Emulsion and alkyd paints shall contain a mildewcide, and both the paint and mildewcide shall conform to OSHA and Federal requirements, including Fed. Spec. TT-P-19. Paint and protective coating materials shall be sealed in containers that plainly show the designated name, formula or specification number, batch number, color, date of manufacture, manufacturer's directions, and name of manufacturer, all of which shall be plainly legible at the time of use. Pigmented paints shall be furnished in containers not larger than five (5) gallons. Materials shall conform to the specifications shown herein and to the requirements hereinafter specified.

To the maximum extent possible, all products shall be the product of one manufacturer unless a specific specialty coating system is specified. Without exception, all coatings for any service condition specified herein shall be by one manufacturer. Once a paint manufacturer has been selected by the Contractor and approved by the Engineer, the Contractor shall ensure that all

Docusign Envelope ID: AFCB16A4-B390-89EA-8013-04580053D90F

equipment manufacturers prime their equipment with the same or a compatible primer. If this cannot be or is not done for any reason, the Contractor shall apply a "universal primer" and recoat with the approved manufacturer's product in the field.

8.02 SUBMITTALS

Submittals shall be in accordance with the following:

A. Samples. Prepare and submit for Engineer's approval copies of color samples on 8-1/2" x 11" size cards for each paint and protective coating system. Each sample card shall clearly show each coat of the finish system, and shall be clearly marked with the manufacturer's name and product identification, and shall be submitted in sufficient time to allow for approval and, if necessary, disapproval and resubmittal without causing any delay of the project.

B. Coating Materials List.
   1. The Contractor shall provide copies of a paint and coating materials list which indicates the manufacturer and paint number, keyed to the coating schedule herein, for approval by the Engineer prior to or at the time of submittal of samples required herein.
   2. The Contractor shall include with his submittal, his protective coating schedule for shop and field coatings of items to receive protection. The schedule shall conform to the specified requirements for surface preparation, priming, and coating for items covered, and shall follow the same requirements for similar work where such work has not been specifically called-out. No bare ferrous nonworking surfaces shall be omitted from the schedule. Particular care shall be taken to cover in sufficient detail the coating of mechanical joints and other mechanical devices which shall conform to the recommended practice of the manufacturer of the joint or other mechanical devices.
   3. Coatings to be used on plastic and fiberglass materials shall be certified as acceptable by all plastic and fiberglass manufacturers whose products are to be coated. Certification copies shall be submitted to the Engineer. The Contractor shall be certified in writing by the painting and coating material manufacturers as qualified applicators of their products with copies of the certification submitted to the Engineer.

C. Product Data Sheets. Contractor shall submit paint and coatings material manufacturers' printed technical data sheets for products intended for use in each paint and coating system. Data sheets shall fully describe material as to its intended use, makeup, recommended surface preparation and application conditions, primers, material mixing and application (including recommended dry mil thickness recoat time), precautions, safety and maintenance cleaning directions.

D. Material Safety Data Sheets. Material Safety Data Sheets (MSDS) shall accompany all paint submittals and shall be prominently displayed at the job site during all painting activities.

Docusign Envelope ID: AFCB16A4-B390-89EA-8013-04580053D90F

8.03 PAINTING SCHEDULES AND SYSTEMS

Painting and coating of surfaces shall conform to the following schedules and systems, unless otherwise specified or shown on the drawings:

A. Schedule A: System 1 – Exposed exterior structural and miscellaneous steel, piping, equipment to include all stainless steel and carbon steel electrical control cabinets non-submerged, not exposed to corrosion, splash, fumes or immersion conditions.

1. Prime: One sprayed coat of a combination of a two-part epoxy primer, gray, of 3.0 mils, minimum dry film thickness as by Devoe Paints, Tru-Glaze Epoxy Primer Nos. 12735 and 12702 (ratio 19:1) or equal. If shop coat is damaged, re-prime bare areas in the field. The exterior of electrical cabinets, in stainless steel, shall be sand-blasted and spray-primed per the paint manufacturer's instructions.

2. Finish: Two coats of "hanging moss green" (Devoe Paints FX-70), Semi-Gloss Advanced Technology Acrylic Resin of 1.5 to 2.0 mils, dry thickness as Exterior Waterborne Semi-Gloss Enamel #83XX by Devoe Paints, or equal. Coats to be applied by spray painting in the shop.

B. Schedule B: System 2 – Piping and pumping equipment – submerged or non-submerged, exposed to spray, splash or corrosive atmosphere, excluding chains and sprockets, and stainless steel bracing in the wetwell:

1. Prime: One coat chemical resistant red iron oxide, based on a polyamide cured epoxy resin, minimum of 3.0-5.0 mils dry film thickness as by Devoe Paints, Devron 201. If shop coat is damaged, re-prime bare areas in the field.

2. Finish: Two coats of polyamide cured, epoxy resin coating, minimum of 4.0-6.0 mils dry film thickness per coat as by Devoe Paints, Devron 224HS-color, moss green as required above.

D. Schedule C; System 3 - Coating aluminum and non-ferrous metal surfaces, including undersides of aluminum access hatches, frames, and checkered plate, subject to corrosive atmosphere and condensation

1. Surface Preparation: Clean non-ferrous surfaces in accordance with 26 SSPC-SP7 (brush-off blast cleaning)
2. Prime: Minimum 3.0 mil DFT (Tnemec Primer – Series 66)
3. Finish: Minimum 4 mil DFT for a minimum total dry mil thickness of 7 mils (Tnemec Finish Coat – Series 66)

8.04 EXECUTION

All painting shall be done by skilled and experienced craftsmen and shall be of highest quality workmanship. Application of materials shall be done only on properly prepared surfaces as herein specified.

Docusign Envelope ID: AFCB16A4-B390-89EA-8013-04580053D90F

Before commencing work, the painter shall make certain that surfaces to be covered are in good condition. Should the painter find such surfaces not to be totally acceptable for covering, he shall report such fact to the Engineer. The application of paint shall be held as acceptance of the surfaces and working conditions and the painter will be held responsible for the results reasonably expected from the materials and processes specified.

Only compatible materials shall be used in the work. Particular attention shall be directed to compatibility of primers and finish coats. If necessary, subject to approval of the Engineer, a compatible barrier coat shall be applied between all existing prime coat and subsequent field coats to ensure compatibility. Ductile iron pipe that has an exterior bituminous coating shall not be painted unless the bituminous coating is removed by sand blasting or an appropriate, compatible, intermediate coat is applied before top coating in accordance with this specification

Hardware, hardware accessories, machined surfaces, nameplates giving manufacturer's data, cover plates, grease fittings, lighting fixtures and similar items in contact with painted surfaces and not to be painted shall be removed, masked, or otherwise protected prior to surface preparation and painting operations so they remain clean and free from paint.

Ferrous metals (not shop primed) shall be sandblasted per SSPC-SP6 to remove mill scale and rust. Ferrous surfaces to be submerged or exposed to spray, splash, fumes or corrosive atmosphere shall be sandblasted to near-white metal blast cleaning according to SSPC-SP 10. Brush blast or clean other metals as appropriate to provide suitable surface. Surface profile as obtained from sandblasting shall be recommended by the coating manufacturer. All metal surfaces shall be completely degreased by solvent cleaning in compliance with SSPC-SP 1.

Galvanized surfaces shall be cleaned of dirt, grease and other foreign substances and solvent cleaned. Surfaces shall be pro-treated with one coat of proprietary acid bound resinous or crystalline zinc phosphate preparation, used in accordance with the manufacturer's directions.

Remove glaze, of florescence, dirt, loose particles and grease (and existing paint, if applicable) from concrete receiving masonry paint. Fill all cracks, cut out defective joints and repaint.

In addition to the above listed surface preparations, all dirt, rust, scale, splinters, loose particles, disintegrated paint grease, oil and other deleterious substances shall be removed from all surfaces that are to be coated.

Work shall be done only under favorable weather conditions and as recommended by paint supplier. Exterior painting shall be done only in dry weather. Any surface coating damaged by moisture or rain shall be removed and redone as directed by the Engineer. Coatings shall be mixed, thinned, tinted and applied in accordance with the manufacturer's recommendations. The Contractor shall tint or match colors as selected by the Owner. A sample shall be applied on the job for review and approval before work is actually done. No thinners shall be used except those specifically mentioned and only in such quantity as directed by the manufacturer's instructions. If thinning is used, sufficient additional coat shall be applied to assure the required dry film thickness is achieved.

The manufacturer's recommended thinner or cleanup solvent shall be used for all cleanup. Application by brush, spray, airless spray or roller shall be as recommend by the manufacturer for

Docusign Envelope ID: AFCB16A4-B390-89EA-8013-04580053D90F

optimum performance and appearance. Paint shall be applied in a neat manner with finished surface free of runs, sags, ridges, laps and brush marks.

Each coat shall be applied in a manner that will produce an even film of uniform and proper thickness, and no variation in sheen or color. Where more than one coat of paint is specified, each coat shall be sufficiently tinted to result in a perceptible difference in shades of the various coats of paints so that the application of subsequent coats can be properly and uniformly spread and inspected. Provision shall be made to allow thorough drying between coats as recommended by the manufacturer before the next coat is applied, and paint used in successive field coats shall be produced by the same manufacturer.

Seal coats shall be used over bitumen-coated surfaces as applicable. Plastic pipe shall be painted in accordance with the pipe manufacturer's recommendations. Pipes, shoot metal ducts and other metal items which are to be installed in inaccessible locations shall be painted prior to installation.

Pumps, motors, machinery, equipment, electrical panels and other manufactured items shall have surfaces prepared, primed and coating in accordance with the recommendations of the manufacturer, and be given at least one touch-up coat with the intermediate coat material and one compete finish cost in the field.

The prime and intermediate coats for the various coating systems shall be as specified earlier and shall be compatible with the field coat or coats. Paint used in the first field coat over shop painted or previously painted surfaces shall cause no wrinkling, lifting or other damage to underlying paint.

All completed surfaces will be checked by the Engineer, and the Contractor shall provide the necessary properly calibrated gages. All non-ferrous surfaces shall be checked for number of coats and thickness by use of a Tooke gage. All ferrous surfaces shall be checked for film thickness by use of Elcometer or Micro-Test magnetic dry film gauge properly calibrated. . The Engineer shall have the right to reject all material for work that is unsatisfactory and require the replacement of either or both at the expense of the Contractor.

All paint brushed, splattered, spilled, or splashed on any surface not specified to be painted shall be removed. Upon completion of the painting work, the Owner shall be furnished one (1) gallon of each type and color of finish paint for touching up at no additional cost. Paint container labels, in addition to other required information, shall have location of color and type marked thereon.

Surfaces to be painted shall be inspected before any paint materials are applied, and after preparation has been completed.

Painted surfaces shall be inspected between coats, prior to application of next coat of painting material. Failure to get acceptance between coats will nullify credits for coats previously applied.

All paint shall be delivered to the job site in unopened original containers.

All paint not intended for the job shall be removed from the job site.

END OF SECTION

Docusign Envelope ID: AFCB16A4-B390-89EA-8013-04580053D90F

SECTION 9 - PIPING MATERIALS: DUCTILE IRON PIPE AND FITTINGS

9.01 GENERAL

The Work in this section includes furnishing all ductile iron pipe, fittings, joints, and appurtenant materials. All castings furnished shall have been cast in the United States of America unless complete certification is furnished in accordance with the latest edition of ANSI/AWWA C 110.

Standards referenced in this section are the latest revision of the following specifications:

ANSI/AWWA C104	"Cement Mortar Lining for Ductile-Iron Pipe and Fittings for Water"
ANSI/AWWA C110	"Ductile-Iron and Gray Iron Fittings, 3-Inch through 48-Inch, for Water and Other Liquids"
ANSI/AWWA C111	"Rubber-Gasket Joints for Ductile-Iron and Pressure Pipe and Fittings"
ANSI/AWWA C115	"Flanged Ductile-Iron Pipe with Threaded Flanges"
ANSI/AWWA C150	"Thickness Design of Ductile-Iron Pipe"
ANSI/AWWA C151	"Ductile-Iron Pipe, Centrifugally Cast, for Water or Other Liquids"
ANSI/AWWA C153	"Ductile-Iron Compact Fittings, 3-Inch through 24-Inch, for Water and Other Liquids"
ASTM D 1248	"Polyethylene Plastics Molding and Extrusion Materials"

9.02 PIPE

9.02.01 GENERAL

All ductile iron pipe shall be designed in accordance with ANSI/AWWA C150. Pipe shall be minimum pressure class as follows:

Size	Pressure Class
3-inch through 18-inch	350
20-inch through 24-inch	300
30-inch through 48-inch	200

For threaded flanged pipe the minimum thickness shall be the nominal thickness as shown on Table 15.1 of ANSI/AWWA C115.

Thickness shall be designed for a flat-bottom trench backfill lightly consolidated to centerline of pipe. Pipe shall be manufactured in accordance with ANSI/AWWA C151.

The pressure rating, metal thickness class, net weight of pipe (without lining) length of pipe, name of manufacturer, "DI" or "DUCTILE," and country where cast, shall be clearly marked on each length of pipe.

The Contractor shall take extreme care when handling pipe and fittings to ensure the interior lining does not get damaged during construction. Lined pipe and fittings must be handled only from the outside of the pipe and fittings. No forks, chains, straps, hooks, etc. shall be placed inside the pipe and fittings for lifting, positioning, or laying. The pipe shall not be dropped or unloaded by rolling.

Docusign Envelope ID: AFCB16A4-B390-89EA-8013-04580053D90F

Care should be taken not to let the pipe strike sharp objects while swinging or being off loaded. Ductile iron pipe should never be placed on grade by use of hydraulic pressure from an excavator bucket or by banging with heavy hammers.

9.02.02 LINING

A. **Potable Water Lines and Reclaimed Water Lines**: Ductile iron pipe and fittings for use in potable and reclaimed water lines shall be cement mortar lined. Cement lining shall conform to ANSI/AWWA C104, and seal coated with approved bituminous seal coat in accordance with ANSI/AWWA C151. Seal coating shall be UL listed or NSF approved for use in potable water mains.

B. **Sanitary Force Mains and Gravity Sanitary Pipe**: Ductile iron pipe and fittings for sanitary sewer force mains and gravity sewer pipe shall be polyethylene, polyurethane, or epoxy lined.

   Epoxy lining shall be 40 mil minimum thickness (multi-pass process) and shall be Protecto 401 Ceramic Epoxy, as manufactured by the Protecto Division of Vulcan Painters, Inc., or approved equal.

   Polyethylene lining shall be factory furnished with a fusion bonded polyethylene liner of 60 mil minimum thickness conforming to ASTM D1248, such as Polybond Plus as furnished by American Cast Iron Pipe Co. or approved equal.

   Polyurethane lining shall be factory applied conforming to Corropipe, as manufactured by Madison Chemical Industries, Inc., or an approved equal. Material shall be applied in conformance with the manufacturer's recommendation and shall be a 40-mil final dry film thickness.

   For any lining method, to ensure a holiday-free lining, documentation must be provided, prior to shipment, showing each section of lined pipe has passed holiday testing at the time of production per ASTM G62. The lining shall have a minimum three (3) year warranty covering failure of the lining and bond failure between liner and pipe.

C. **Storm Drain Gravity Pipe**: Ductile iron pipe and fittings for storm drain gravity pipe shall be epoxy lined as per sanitary pipe or cement mortar lined as per water pipe, at the Contractor's option.

9.03 FITTINGS

Ductile iron fittings shall conform to ANSI/AWWA C110 or ANSI/AWWA C153.

Fittings shall be suitable for a minimum water pressure plus water hammer as follows:

Size	Type	Pressure Rating
3-inch through 12-inch	DI	350
14-inch through 24-inch	DI	350
30-inch through 48-inch	DI	250

Docusign Envelope ID: AFCB16A4-B390-89EA-8013-04580053D90F

Fittings shall be coated outside with petroleum asphaltic coating, 1 mil minimum thickness.

Fittings shall be lined as specified herein headed "4.02 Pipe."

Anchor couplings equal to McWayne Clow F-1211 for fire hydrant assemblies may be substituted with an anchoring tee equal to Catalog No. A-10180 locked hydrant tee as manufactured by American Ductile Iron Pipe Co. or hydrant tee with rotatable MJ gland as manufactured by U.S. Pipe Co. in place of the MJ tee and anchor coupling as shown, at the Contractor's option.

9.04 JOINTS - BURIED PIPE AND FITTINGS

Joints for ductile iron pipe and fittings shall conform to ANSI/AWWA C111, except as otherwise specified. All pipe and fittings shall be furnished complete with joint accessories necessary for installation conforming to ANSI/AWWA C111. No additional payment will be made for joint accessories, including retainer glands, unless otherwise specified.

When deflection is required the joint shall be completed prior to setting the deflection. The deflection shall conform to applicable AWWA Standards or manufacturer's recommendation with prior Engineer's approval.

The Contractor shall furnish and install all necessary materials, equipment, and appurtenances required to complete the work.

A. **Unrestrained Joints**: Joints for unrestrained pipe shall be push-on joint. Joints for fittings, when installed with unrestrained pipe, shall be mechanical joint with DI retainer glands, as specified herein for restrained joints.

B. **Restrained Joints**: All joints in restrained pipe systems shall be of the same type (pipe and fittings), except valves shall be mechanical joint with DI retainer glands as specified.

1. **12-inch and Smaller**: Joints for restrained pipe and fittings, 12-inch and smaller, shall be one of the following:

a. Push-on restrained joint utilizing a retainer ring, equal to U.S. Pipe TR Flex. It shall be UL listed, FM approved, or shall be certified by an approved laboratory that the restrained joint will not separate at the specified test pressure.

b. Push-on restrained joint using a locking type gasket, equal to Field-Lok, as manufactured by U.S. Pipe and Foundry, Inc. It shall be UL listed, FM approved, or shall be certified by an approved laboratory that the restrained joint will not separate at the specified test pressure.

c. Mechanical joint with DI retainer glands shall be furnished with retainer glands equal to Series 1100 Megalug, as manufactured by EBAA Iron Inc., Stargrip 3000 as manufactured by Star Pipe Products, or DI MJ Gripper Gland as manufactured by U.S. Pipe and Foundry Co. for use with ductile iron pipe. All retainer glands shall be UL listed, FM approved, or shall be certified for 350 psi pressure rating with a 2:1 safety factor.

Docusign Envelope ID: AFCB16A4-B390-89EA-8013-04580053D90F

2. **Larger than 12-inch**: Joints for restrained pipe and fittings larger than 12-inch shall be as follows:

   a. Restrained pipe joints shall be modified push-on restrained joint, equal to U.S. Pipe TR Flex, and shall be UL listed or FM approved.

   b. Fittings joints shall be equal to U.S. Pipe TR Flex or shall be mechanical joint with DI retainer glands. Retainer glands shall be equal to Series 1100 Megalug or Stargrip 3000 for 16-inch and larger pipe. All retainer glands shall be UL listed, FM approved, or certified for 350 psi pressure rating (for 16-inch) and 250 psi pressure rating (for larger than 16-inch) with a 2:1 safety factor.

   c. Valve joints shall be mechanical joint with DI retainer glands as specified herein for larger than 12-inch fittings joints.

9.05 JOINTS - EXPOSED PIPE AND FITTINGS

Joints for exposed ductile iron pipe and fittings shall be restrained, except as otherwise noted on the Contract Drawings. Joints for exposed pipe in plants and in vaults shall be flanged where noted on the Contract Drawings.

Joints for exposed pipe and fittings 12-inch and smaller shall be modified push-on restrained joint using a retainer ring, or modified push-on joint using a locking type gasket, as specified herein headed "4.04 Joints - Buried Pipe and Fittings."

Joints for exposed pipe and fittings larger than 12-inch shall be modified push-on restrained joint using a retainer ring as specified herein headed "4.04 Joints - Buried Pipe and Fittings."

9.06 DETECTION

Pipe shall have 3-inch detectable metallic tape of the proper color placed directly above the pipe and 12-inch below finished grade or 6-inch detectable tape between 12-inch and 24-inch below finished grade.

Pipe shall also have tracer wire installed along the pipe alignment. The tracer wire to be used shall be a solid, 10-gauge, high strength, copper clad steel wire with a polyethylene jacket of appropriate color manufactured by Copperhead Industries or approved equal.

9.07 ZINC/EPOXY/FLUOROPOLYMER PROTECTIVE COATING

Joints and Pipe exposed to extreme coastal environments including, but not limited to, aerial ocean crossings shall have this system or an approved equal applied as a protective coating.

Surface Preparation: SSPC-SP6/NACE No.3 Commercial Blast Cleaning with a minimum 1.5 mil angular anchor profile.

Tnemec	Coating Thickness
Primer: Series 90-97 Tneme-Zinc	2.5 - 3.5 mils
2nd Coat: Series 66HS Hi-Build Epoxoline	3.0 - 6.0 mils

Docusign Envelope ID: AFCB16A4-B390-89EA-8013-04580053D90F

3rd Coat: Series 700 Hydroflon 2.0 - 3.0 mils

Total Dry Film Thickness: 7.5 - 12.5 mils

Minimum Dry Film Thickness: 9.5 mils

END OF SECTION

Docusign Envelope ID: AFCB16A4-B390-89EA-8013-04580053D90F

THIS PAGE INTENTIONALLY LEFT BLANK

Docusign Envelope ID: AFCB16A4-B390-89EA-8013-04580053D90F

SECTION 10 - PIPING MATERIALS: PVC PRESSURE PIPE

10.01 GENERAL

The Work in this section includes furnishing all Polyvinyl Chloride (PVC) pressure pipe and fittings. PVC pressure pipe includes all PVC pressure pipe 2-inch through 36-inch.

Standards referenced in this Section are the latest revision of the following specifications:

ANSI/AWWA C900-16	"Polyvinyl Chloride (PVC) Pressure Pipe and Fabricated Fittings, 4 In. Through 60 In."
ANSI/AWWA C110	"Ductile-Iron and Gray-Iron Fittings, 3-Inch through 48-Inch for Water"
ANSI/AWWA C111	"Rubber-Gasket Joints for Ductile-Iron Pressure Pipe and Fittings"
ANSI/AWWA C153	"Ductile-Iron and Gray-Iron Fittings, 3-Inch through 48-Inch for Water"
ASTM D 1784	"Standard Specification for Rigid Poly (Vinyl Chloride) (PVC) Compounds and Chlorinated Poly (Vinyl Chloride) (CPVC) Compounds"
ASTM D 1785	"Standard Specification for Poly (Vinyl Chloride) (PVC) Plastic Pipe, Schedules 40, 80, and 120
ASTM D 2241	"Standard Specification for Poly (Vinyl Chloride) (PVC) Pressure-Rated Pipe (SDR Series)"
ASTM D 3139	"Standard Specification for Joints for Plastic Pressure Pipes Using Flexible Elastomeric Seals"

10.02 PIPE

A. **Two-inch Pipes**: All 2-inch PVC pipe shall meet ASTM D 1784 specification for rigid PVC compounds and ASTM D 2241 specification for PVC plastic pipe. PVC pipe shall be suitable for use at maximum hydrostatic working pressure of 160 psi at 73°F. Pipe shall have a standard dimension ratio (SDR) 26 and bear the NSF Seal for potable water pipe.

B. **4-inch Through 36-inch Pipes**: PVC pressure pipe 4-inch through 36-inch shall meet the requirements of ANSI/AWWA C900-16, with outside diameter dimensions of ductile iron pipe. All 4-inch through 36-inch PVC pressure pipe shall be Class 235 and DR18.

C. **UV Resistant PVC Pipe**: All PVC piping exposed to sunlight shall contain titanium dioxide for UV resistance, and shall conform to ASTM D 1784 and ASTM D 1785 (IPS). The Contractor shall submit the manufacturer's certificate of conformance to the City. Pipe shall be marked with manufacturer's identification.

10.03 FITTINGS

A. **Two-inch Pipes**: Gasketed joint standard dimension ratio (SDR) 21 PVC or galvanized steel fittings shall be used with all 2-inch PVC pipe. PVC adapters, Harco as manufactured by the Harrinton Corporation or approved equal, shall be used for jointing to 2-inch gate valves, galvanized fittings, and existing threaded pipe.

Docusign Envelope ID: AFCB16A4-B390-89EA-8013-04580053D90F

B. **Four-inch Through 36-inch Pipes**

1. **Molded PVC Pressure Fittings**: Fittings for 4-inch through 8-inch sanitary sewer pressure pipe shall be molded PVC pressure fittings, unless DI fittings are directed by the Engineer. Molded PVC fittings shall meet the requirements of ANSI/AWWA C900-16 and shall be Harco Class 150 as manufactured by the Harrington Corporation, or approved equal, as directed by the Engineer.

2. **DI Fittings**: Fittings for pipe larger than 8-inch shall be DI, mechanical joint. DI fittings for 4-inch through 36-inch PVC pressure pipe shall conform to ANSI/AWWA C110 or C153 and shall conform to the Technical Specifications section headed "Piping Materials: Ductile Iron Pipe and Fittings."

C. Where flanged fittings are shown, specified, or directed by the Engineer, adapter flanges shall be used on plain end PVC pipe. Adapter flanges shall be suitable for PVC pipe and be equal to Uni-Flange Series 900 as manufactured by Ford/Uni-Flange, Wabash, Indiana.

10.04 JOINTS

Pipe joints shall be plain end, rubber gasket push-on joints, unless otherwise shown. Push-on joints shall meet the requirements of ASTM D 3139.

Joints to DI fittings shall be rubber gasket mechanical joints with retainer glands, unless otherwise shown. All retainer glands shall be UL listed or FM approved. The retainer glands shall be installed in accordance with the manufacturer's recommendations.

When deflection is required the joint shall be completed prior to setting the deflection. The deflection shall conform to applicable AWWA Standards or manufacturer's recommendation with prior Engineer's approval.

Mechanical joints shall meet the requirements of ANSI/AWWA C111.

10.05 DETECTION

Pipe shall have 3-inch detectable metallic tape of the proper color placed directly above the pipe and 12-inch below finished grade or 6-inch detectable tape between 12-inch and 24-inch below finished grade.

Pipe shall also have tracer wire installed along the pipe alignment. The tracer wire to be used shall be a solid, 10-gauge, high strength, copper clad steel wire with a polyethylene jacket of appropriate color manufactured by Copperhead Industries or approved equal.

10.06 MARKINGS AND COLOR CODING

In addition to the standard markings required by ANSI/AWWA C900-16, the letters NSF denoting National Sanitation Foundation approval shall be included in the marking system, on each pipe length and fitting.

Docusign Envelope ID: AFCB16A4-B390-89EA-8013-04580053D90F

PVC pipe shall be manufactured of solid color as specified, or white with continuous colored ink lettering. The applicable color codes, with light color stabilant, are as follows:

Pipe Use	Color Coding
Potable Water	Safety Blue
Sanitary Sewer	Safety Green
Reclaimed Water	Safety Purple

UV resistant PVC pipe shall be solid color as specified above, or white with colored lettering as specified above.

10.07 HARNESSING

Ductile iron fittings with mechanical joints used with PVC pipe that require harnessing, shall be provided with ductile iron retainer glands such as Series 2000 PV Megalug as manufactured by EBAA Iron Inc., Stargrip 4000 as manufactured by Star Pipe Products, or approved equal.

PVC push-on joints for pipe in casings, for joints to PVC pressure fittings, or where shown, shall be harnessed using a ductile iron retainer for push-on joint PVC pipe, such as Series 1600 as manufactured by EBAA Iron Inc., Series 1100 as manufactured by Star Pipe Products, or approved equal.

10.08 INSPECTION AND TESTING

All pipelines shall remain undisturbed for 24 hours to develop complete strength at all joints. All pipelines shall be subjected to a hydrostatic pressure and leak test per the Specifications.

END OF SECTION

Docusign Envelope ID: AFCB16A4-B390-89EA-8013-04580053D90F

THIS PAGE INTENTIONALLY LEFT BLANK

Docusign Envelope ID: AFCB16A4-B390-89EA-8013-04580053D90F

SECTION 11 - PIPING MATERIALS: HDPE PRESSURE PIPE

11.01 SCOPE OF WORK

The Contractor shall furnish all labor, materials, equipment and incidentals required to install polyethylene pressure pipe, fittings and appurtenances as shown on the Contract Drawings and specified in the Contract Documents and these Standards.

Newly installed pipe shall be kept clean and free of all foreign matter & gouges.

All pipe shall be correctly color coded / identified.

11.02 QUALIFICATIONS

All polyethylene pipe, fittings and appurtenances shall be furnished by a single manufacturer who is fully experienced, reputable and qualified in the manufacture of the items to be furnished.

11.03 POLYETHYLENE PRESSURE PIPE

A. Polyethylene pipe 4" diameter and larger shall be high-density bimodal PE4710 polyethylene resin with a minimum cell classification of 445574 per ASTM D3350, Class 200, DR 11, meeting the requirements of AWWA C906. All pipe materials used in potable water systems shall comply with NSF Standard 61. Outside diameters of water, reclaimed water and pressure sewer HDPE pipes shall be ductile-iron pipe sizing system (DIPS).

B. Polyethylene tubing 2 inches in diameter and smaller for potable water and reclaimed water shall be high-density PE4710 polyethylene resin with a minimum cell classification of 445574 per ASTM D3350, Pressure Class 200, Copper Tube Size (CTS), SDR 9, meeting the requirements of AWWA C901 and ASTM D2737. Butt fusion or CTS brass connections shall be used. All pipe materials used in potable water systems shall comply with NSF Standard 61.

C. Alternatively, polyethylene tubing 2 inches in diameter and smaller for potable water and reclaimed water shall be crosslinked high-density polyethylene (PEXa) 3306 pipe, Pressure Class 200, Copper Tube Size (CTS), SDR 9, meeting the requirements of AWWA C904. Butt fusion or CTS brass connections shall be used. All pipe materials used in potable water systems shall comply with NSF Standard 61.

D. All HDPE MJ Adapters (DIPS) shall be a DIPS Bell MJ Adaptor with a retaining gland, stainless steel reinforcing collar, gland ring, standard MJ gasket, and extra-long Tee-head bolts. The gland ring shall be ductile iron, C110, heavy body gland ring. Twist-off nuts, sized same as tee-head bolts, and shall be used to insure proper actuating of restraining devices.

11.04 JOINTS

Where PE pipe is joined to PE pipe, it shall be by thermal butt fusion. Thermal fusion shall be accomplished in accordance with the written instructions of the pipe manufacturer and fusion equipment supplier. The installer of the thermal butt fused PE pipe shall have received training in

Docusign Envelope ID: AFCB16A4-B390-89EA-8013-04580053D90F

heat fusion pipe joining methods and shall have had experience in performing this type of work. The date of technician certification shall not exceed 12 months before commencing construction.

Where thermal butt fusion cannot be used, or when specifically called for on the Contract Drawings, electro-fused couplings may be used. Fusion shall be in accordance with the written instructions of the fitting manufacturer. However, Contractor must get prior approval from the City and Engineer before implementing a fusion coupling. Solvent epoxy cementing, electro-fusion couplings and mechanical joining with bolt on wrap around clamps or mechanical joints without an adapter shall not be used for connections.

All fittings for HDPE pipe (4” and larger), except for D.I/HDPE Mechanical Joint Adaptors, shall be ductile iron mechanical joint fittings and shall be joined to the pipe using a butt fused restrained mechanical joint adapter. The D.I./HDPE mechanical joint adapter shall be connected to the HDPE pipe by a heat-fused joint on one end, and connected to a ductile iron pipe valve, or fitting with a mechanical joint on the other end.

Flanged adapter, mechanical adapter and molded fittings for 4-inch and larger pipe shall be Pressure Class 200, PE4710, Ductile Iron Pipe Size (DIPS), DR 11, conforming to AWWA C906 with min. cell classification of 445474 per ASTM D3350. Mechanical joints and fittings for 2-inch and smaller tubing shall meet the requirements of: AWWA C901, ASTM D3350 and ASTM D3140.

11.05 DETECTION

Direct buried HDPE pipe shall have 3-inch detectable metallic tape of the proper color placed directly above the pipe and 12-inch below finished grade or 6-inch detectable tape between 12-inch and 24" below finished grade.

Direct buried or horizontal directional drilled HDPE pipe shall also have tracer wire installed along the pipe alignment. The tracer wire to be used shall be a solid, 10-gauge, high strength, copper clad steel wire with a polyethylene jacket of appropriate color manufactured by Copperhead Industries or approved equal.

11.06 IDENTIFICATION

Pipe shall bear identification markings in accordance with AWWA C906.

Pipe shall be color coded blue for water, purple (Pantone 522 C) for reclaimed water or green for pressure sewer using a solid pipe color or embedded colored stripes. Where stripes are used, there shall be a minimum of three stripes equally spaced.

11.07 INSTALLING POLYETHYLENE PRESSURE PIPE AND FITTINGS

All polyethylene pressure pipe shall be installed by direct bury, directional bore, or a method approved by the City prior to construction. If directional bore is used, or if directed by the City, the entire area of construction shall be surrounded by silt barriers during construction.

Docusign Envelope ID: AFCB16A4-B390-89EA-8013-04580053D90F

11.08 INSPECTION AND TESTING

All pipelines shall remain undisturbed for 24 hours to develop complete strength at all joints. All pipelines shall be subjected to a hydrostatic pressure and leak test per the Specifications.

END OF SECTION

Docusign Envelope ID: AFCB16A4-B390-89EA-8013-04580053D90F

THIS PAGE INTENTIONALLY LEFT BLANK

Docusign Envelope ID: AFCB16A4-B390-89EA-8013-04580053D90F

SECTION 12 - PRESSURE PIPE CONSTRUCTION

12.01 GENERAL

The Work in this section includes construction of potable water mains, reclaimed water mains, sanitary force mains, and appurtenances.

Pressure pipelines are to be constructed at locations shown on the Contract Drawings. The City reserves the right to make minor changes in grade and/or alignments as the Work progresses.

Piping materials for pressure pipe installations shall be as follows:

Potable Water Main		
PVC Pipe	2-inch	
DI Pipe	6-inch and larger	
HDPE Pipe	2-inch and larger	ASTM D3350 meeting PE 3408 code designation
Galvanized Pipe	2-inch blow-off assemblies, 2-inch connections, 2-inch short tunneling, and 2-inch short relocations	
Fittings	2-inch PVC pipe:	PVC with gasketed joint
	2-inch galvanized pipe	Galvanized steel with threaded joint
	6-inch and larger pipe	Ductile Iron (DI) with push-on or mechanical joint

Sanitary Force Main		
PVC Pipe	4-inch through 36-inch:	ANSI/AWWA C900-16
DI Pipe	14-inch and larger pipe:	ANSI/AWWA C151
HDPE Pipe	2-inch and larger	ASTM D3350 meeting PE 3408 code designation
PVC Fittings	4-inch through 48-inch pipe:	DI with push-on or mechanical joint
DI Fittings	4-inch and larger pipe:	DI with push-on or mechanical joint
HDPE Fittings	2-inch and larger pipe:	ASTM D3350 meeting PE4710 code designation or DI with HDPE mechanical joint adapter

All existing water services shall be kept in service during the construction of water mains and the preparation of new service connections. Water meters requiring disconnection by the Contractor to accomplish the Work shall be promptly restored to service by the Contractor. The Contractor shall give a minimum of 24 hours prior written notice to all affected water customers of the intended service interruption.

The Contractor's attention is called to the fact that the existing sewer system must be kept in operation at all times. Where connections are made to existing mains or other shutdowns are necessary, permission must be obtained and arrangements must be made with the Utilities

Docusign Envelope ID: AFCB16A4-B390-89EA-8013-04580053D90F

Department for removing from service those mains that will be affected. Shutdowns must be held to a minimum in both number and duration. Bypass pumping and hauling operations may be required to interrupt service.

No valve or other control device on the existing system shall be operated by the Contractor without first obtaining approval from the Utilities Department. The Contractor shall, at least forty-eight (48) hours in advance, notify citizens subject to interruption of service by means of door hangers or any other approved method of the starting time and duration of such interruption.

All pipe, fittings, and appurtenances shall be furnished by the Contractor and be transported, delivered, and installed by the Contractor in accordance with the requirements of the subsection headed "Laying and Jointing Pipelines."

All pipelines shall be tested in accordance with the requirements of the subsection headed "Testing and Disinfection of Pressure Pipelines: Pressure Test."

All potable water and reclaimed water pipelines shall be disinfected before they are put into service as specified in the subsection headed "Testing and Disinfection of Pressure Pipelines: Disinfection."

As-built drawings shall be submitted to the Engineer prior to acceptance of the Work and prior to commencement of the warranty period.

Standards referenced in this Section are the latest revision of the following specifications:

ANSI/AWWA C105	"Polyethylene Encasement for Ductile-Iron Piping for Water and Other Liquids"
ANSI/AWWA C110	"Ductile-Iron and Gray-Iron Fittings, 3-Inch through 48-Inch
ANSI/AWWA C111	"Rubber-Gasket Joints for Ductile-Iron Pressure Pipe and Fittings"
ANSI/AWWA C504	"Rubber-Seated Butterfly Valves"
ANSI/AWWA C509	"Resilient-Seated Gate Valves for Water and Sewerage Systems"
ANSI/AWWA C515	“Reduced Wall, Resilient-Seated Gate Valves for Water Supply Service”
ANSI/AWWA C550	"Protective Epoxy Interior Coating for Valves and Hydrants"
ANSI/AWWA C600	"Installation of Ductile-Iron Water Mains and Their Appurtenances"
ANSI/AWWA C605	"Underground Installation of PVC Pressure Pipe and Fittings for Water"
ANSI/AWWA C651	"Disinfecting Water Mains"
ANSI/AWWA C800	"Underground Service Line Valves and Fittings"

Docusign Envelope ID: AFCB16A4-B390-89EA-8013-04580053D90F

ANSI/AWWA C900-16	"Polyvinyl Chloride (PVC) Pressure Pipe and Fabricated Fittings, 4 In. Through 60 In."
ANSI/AWWA C901	"Polyethylene (PE) Pressure Pipe and Tubing, 1/2-Inch through 3-Inch for Water Service"
ANSI/AWWA C906	"Polyvinyl Chloride (PVC) Pressure Pipe and Fittings 4-Inch through 63-Inch, for Water Distribution and Transmission"
ANSI/AWWA C901	"Polyethylene (PE) Pressure Pipe and Tubing, 1/2-Inch through 3-Inch for Water Service"
ASTM A 126	“Specification for Gray Iron Castings for Valves, Flanges, and Pipe Fittings”
ASTM D 429	"Test Methods for Rubber Property - Adhesion to Rigid Substrates"
ASTM D 3139	"Standard Specification for Joints for Plastic Pressure Pipes using Flexible Elastomeric Seals"

12.02 DATA TO BE SUBMITTED

The Contractor shall submit shop drawings in accordance with the Specifications.

Pipe
Valves
Joints and joint accessories
Fittings
Specials and accessories
Special linings and coatings
Water service materials

12.03 MATERIALS

All pressure pipe materials shall be in accordance with the applicable requirements of the Technical Specifications sections headed:

DIP “Piping Materials: Ductile Iron Pipe and Fittings”
PVC “Piping Materials: PVC Pressure Pipe”
HDPE “Piping Materials: HDPE Pressure Pipe”

All pressure pipe materials (pipe, fittings, valves, valve boxes, tapping valves and sleeves, precast thrust blocks, blow-offs, house services, etc.) except fire hydrants, shall be furnished by the Contractor. All pressure pipe fittings and valves shall be cast and manufactured in the United States of America unless complete certification is furnished in accordance with ANSI/AWWA C110.

All materials furnished shall be new. Materials not specified herein or on the Contract Drawings

Docusign Envelope ID: AFCB16A4-B390-89EA-8013-04580053D90F

shall conform to AWWA Standards and Industry Standards.

Piping, concrete, masonry, and all other materials shall conform to those materials as specified in the appropriate Technical Specifications sections for those materials. Specific pressure pipe and appurtenances materials shall conform to the following specifications:

All materials found during the progress of work to have flaws, cracks, or other defects will be rejected by the Engineer regardless of whether or not it has been installed and shall be replaced by and at the expense of the Contractor.

Materials shall not be stacked or placed under materials in such a manner that damage could result. Slings, hooks, or tongs used for lifting shall be padded in such a manner as to prevent damage to exterior surfaces, interior linings and components. If any part of the coating, lining or components is damaged, the repairs or replacement shall be made by the Contractor at his expense and in a manner satisfactory to the Engineer prior to attempting installation. In the event that materials supplied by the City are defective, the Contractor shall notify the Engineer immediately so arrangements can be made for replacing such devices.

12.03.01 2-INCH DIAMETER PIPE

1. Steel pipe shall be standard galvanized steel, Schedule 40, furnished in 21-foot lengths with both ends threaded.

2. All 2-inch steel fittings shall have screw type joints.

3. Pipe thread compound shall not be used. Threads shall be wrapped with teflon joint tape, non-hardening, Mil. Spec. T27730A. Cutting oils shall be dark, non-toxic, and equal to cutting oil manufactured by the Rigid Tool Company. The Contractor shall take caution not to allow cutting oil inside the pipe and shall remove all cuttings. Cutting oils shall be UL listed or NSF approved for use in potable water systems.

4. PVC pressure pipe to be used in the potable water system shall be Safety Blue in color or white with Safety Blue identification tape or color coded approved ink lettering as specified. PVC pressure pipe to be used in the reclaimed water system shall be Safety Purple in color or white with Safety Purple identification tape or approved color-coded ink lettering as specified.

   PVC pipe shall conform to the Technical Specifications section headed "Piping Materials - PVC Pressure Pipe."

5. HDPE pressure pipe shall conform to the Technical Specifications section headed, “Piping Materials – HDPE Pressure Pipe.”

12.03.02 VALVES - GENERAL

1. Valves shall be iron body, bronze mounted, and have joint ends as shown or specified. Valves shall have O-ring seals, unless otherwise specified.

Docusign Envelope ID: AFCB16A4-B390-89EA-8013-04580053D90F

2. A standard 2-inch square AWWA operating nut shall be provided on each valve. Valves shall have non-rising stems and shall open when the nut is turned counterclockwise. Each nut shall be marked with an arrow.

3. All valves of the same type shall be from the same manufacturer. Parts of valves of the same type and size shall be interchangeable. Unless otherwise specified, all valves shall be designed for a cold water working pressure of 150 psi.

4. All valves shall be furnished complete with gaskets, bolts, nuts, and glands necessary for installation.

5. All valves larger than 2-inch shall have restrained rubber gasketed compression joints, or mechanical joints with retainer glands, conforming to ANSI/AWWA C111, at the Contractor's option unless otherwise noted.

6. Valves used for sanitary force mains shall be the same as those used in other pressure pipe applications, unless otherwise specified.

7. Upon request, the valve manufacturer shall provide an affidavit of compliance, proof of design testing, and proof of production testing.

12.04 CONNECTIONS TO EXISTING MAINS

The Contractor shall connect the new pressure pipelines to the existing pressure pipelines at locations as shown on the Contract Drawings and as specified. The Engineer shall be notified at least 2 working days prior to making connections. The time at which the connections are to be made and the manner of making the connections shall be subject to review and acceptance by the Engineer.

The connections to the existing pressure pipeline shall be made to minimize the time during which the existing pressure pipeline will be out of service. The Contractor shall utilize the necessary number of crews and types of equipment and shall work the necessary hours to ensure completion of the connections within the time specified.

12.05 CONSTRUCTION OPERATIONS

Pressure pipelines shall be installed in open trenches, except when another method, such as jacking, boring, or tunneling, is shown on the Contract Drawings, specified, or ordered. Jetting shall not be allowed under roadway, alley, or driveway. All mains shall be laid and maintained at the required lines and grades with fittings, valves and appurtenances at the described locations. All pipe shall be laid to the depth as shown on the Plans, or when a depth is not indicated, with a minimum cover of thirty-six (36) inches outside of the roadway, and forty-two (42) inches under the roadway. Grade lines shall be set by the Contractor. The tolerance of such grades shall not be more than that specified on the drawings. When no tolerance is indicated a tolerance of 0.5 foot shall be used. All other realignments must be approved by the Engineer. The Contractor shall have suitable survey equipment on the site at all times.

All joints, fittings and other appurtenances shall not be covered until inspected by the City Inspector.

Docusign Envelope ID: AFCB16A4-B390-89EA-8013-04580053D90F

Non-compliance will require excavation of all joints and fittings

Pipe and fittings shall not be strung in residential areas more than 3 weeks in advance of pipelaying, unless otherwise approved by the Engineer. The Contractor shall install pipelines, pressure test, disinfect, and restore the ground surface in pipeline segments of 3,500 linear feet or less, except as otherwise approved by the Engineer. The new segment of pipelaying shall not start until restoration has commenced on the previous segment, or as approved by the Engineer.

Pipeline segments shall be pressure tested and disinfected after pipelaying is complete, to minimize inconvenience to the Public, except as otherwise approved by the Engineer.

No excavation shall be left open over a weekend. All pavement openings shall be completely repaired as specified in the Technical Specifications section headed "Surface Restoration" within 7 days of opening, or a temporary asphaltic pavement patch placed and maintained daily.

Where shown on the Contract Drawings or where directed by the Engineer, the Contractor shall remove existing pipelines which are shown to be abandoned. Any such pipe, fitting, etc., shall be removed after the new pipeline (replacing the existing line) is accepted and put into service by the City. Removed pipe and appurtenances 6 inches or larger which are described elsewhere or deemed by the Engineer to be reusable shall be delivered to the City by the Contractor. All material not deemed reusable shall become the Contractor's property and shall be removed from the site by the Contractor. No additional payment will be made for salvaging pipe and fittings.

In general, pipe six inches and smaller abandoned within City rights-of-way shall be capped at both ends and abandoned in place. Grouting is not required unless specifically required by the Engineer or the City. Abandoned pipes eight inches and larger shall be filled with grout or flowable fill unless otherwise directed by the City or the Engineer. Pipe abandoned in rights-of-way owned by municipalities other than the City shall be subject to the requirements of the agency having jurisdiction. All pipes shall be abandoned in a manner which results in the abandoned pipeline not being pressurized.

Short tunneling of pressure pipe shall be constructed as required to protect trees, shrubs, and existing surface or subsurface utilities and structures. Short tunnels shall be constructed to the lengths shown on the Contract Drawings, specified, or directed by the Engineer. The Contractor will be allowed to utilize an auger machine and to push or pull the carrier pipe into the bore without the need of a casing. The Contractor shall install the pipe within the bore hole on a line and grade to allow connection to open cut piping adjacent to the bore hole within pipe jointing alignment limits defined for the pipe in question. The completed installation shall not result in settlement of soil under the obstacle.

Existing fences shall be restored by the Contractor and shall be finished and installed so that the restoration is equal to or better than the original. Only those portions of original fencing or materials there from, that the Engineer approves for re-use, shall be used by the Contractor in fence restoration. All other materials, including lumber, paint, wood preservative, concrete, and metal products shall be furnished by the Contractor.

The cost of protecting, replacing, relocating, and maintaining (including using hay bales) storm and sanitary sewerage facilities shall be included in the various unit price Pay Items, and no separate

Docusign Envelope ID: AFCB16A4-B390-89EA-8013-04580053D90F

payment will be made therefore unless otherwise specified in other Pay Items.

12.06 LAYING AND JOINTING PRESSURE PIPELINES

All pressure pipeline installation shall comply with applicable standards of ANSI/AWWA C600, C605, and C906, and with these Specifications.

Mechanical joint fittings and valves installed in sections of unrestrained pipe, and in blow-offs, shall be installed using ductile iron retainer glands, as set forth in the Technical Specifications section headed "Piping Materials: Ductile Iron Pipe."

PVC push-on fittings for pressure pipelines shall conform to the Technical Specifications section headed "Piping Materials: PVC Pressure Pipe."

Laying and jointing of HDPE pressure pipe shall conform to the Technical Specifications section headed “Piping Materials: HDPE Pressure Pipe.”

Excavation and backfill shall conform to the Technical Specifications section headed "Excavation and Backfill."

In lieu of jacking and boring or pushing of pipe up to 4-inch in diameter, the Contractor may use a soft bore directional drilling process as provided by Flow Mole Corporation or approved equal.

Cover for all pressure pipeline Work, if not shown on the Contract Drawings, shall be not less than:

	2-inch and 4-inch	6-inch and larger
Under roadways and alleys:	36 inches	42 inches
Under grass and sidewalks:	24 inches	36 inches

Unless otherwise noted on the Contract Drawings or in other sections of this Specification, the pressure pipeline shall be handled and installed in strict accordance with the manufacturer's instructions and with the applicable AWWA Standards. If a conflict exists between the manufacturer's instructions and the AWWA Standards, the manufacturer's instructions shall govern.

Prior to installation, all pipe shall be inspected for defects and all lump or excess coatings shall be removed. The inside of the bell and outside of the spigot shall be cleaned prior to joining of all pipe. Caution shall be taken to prevent damage to the pipe during lowering into the trench.

Any defective material shall be removed from the job site immediately. Should a defect be discovered after the item has been placed in the trench, the replacement will be at the Contractor's expense. Materials shall be stored along installation routes in a manner acceptable to the Engineer or as described elsewhere in the Specifications.

Polyethylene wrapping shall be installed on ductile iron pipe and appurtenances where shown on the Contract Drawings or where ordered by the Engineer.

Docusign Envelope ID: AFCB16A4-B390-89EA-8013-04580053D90F

Polyethylene encasement materials and installation shall meet the applicable requirements of ANSI/AWWA C105. Care shall be taken while backfilling to prevent puncturing, tearing, or otherwise damaging the polyethylene wrapping.

The Contractor shall use every precaution during construction to protect the pressure pipeline against the entry of non-potable water, dirt, wood, small animals, and any other foreign material that would hinder or contaminate the operation of the pipeline. Where the groundwater elevation is above the bottom of the trench, the Contractor shall provide suitable dewatering equipment.

All dewatering shall meet the requirements set forth in the Technical Specifications section headed "Excavation and Backfill."

Watertight plugs of an approved type shall be installed in the ends of all pipe, fittings, and valves during 24-hour or longer periods when installation is not in progress, or as required to prevent ditch water, sand, etc. from entering the pipe. Standard plugs shall be inserted into all dead end pipes, tees or crosses; spigot ends shall be capped; flanged ends shall have blind flanges, or sheet metal or plywood caps. Plugs installed for pressure testing shall be fully secured and restrained to withstand the test pressure.

Where plugging is required because of Contract division or phasing for later connection, the ends of such lines shall be equipped with a permanent type cast iron or ductile iron plug/cap or blind flange with or without a blowoff cock, as shown on the Drawings. Installation or removal of such plugging shall be considered incidental to the work and no payment shall be expected for this work by the Contractor.

Concrete thrust blocks of the proper size and type shall be furnished and installed at all locations where a change in the pipe alignment exceeds 7 degrees or dead ends, unless Contract Drawings show that adjacent pipe, in excess of 2 bells each direction, shall be restrained. Concrete thrust blocks used on 12-inch and larger mains shall be poured in place. Precast thrust blocks may be used on mains less than 12-inch in diameter. Thrust block concrete shall conform to the Technical Specifications section headed "Concrete, Masonry, and Reinforcing Steel."

Boring, soft boring, and jacking work other than new services shall strictly conform to all applicable stipulations of the State of Florida Department of Transportation Utility Accommodation Manual, unless otherwise specified. Softbore shall utilize a guided boring system, equal to FlowMole or DirectLine.

12.06.01 Expose Existing Pressure Pipeline and Record Elevation

The Contractor shall expose the existing pressure pipelines prior to the construction stake-out to determine the station, offset, and elevation, before actual construction begins. The Contract Drawings may be modified by the Engineer, as necessary, to accommodate the pressure pipelines which must remain.

12.06.02 Conflict Adjustment of Existing Pressure Pipelines

In some locations existing pressure pipelines intended to remain in service may need to be adjusted horizontally or vertically to avoid conflicts with the proposed storm drains, sanitary

Docusign Envelope ID: AFCB16A4-B390-89EA-8013-04580053D90F

sewers, roadway base, manholes, inlets, or other proposed improvements. The conflict may not be shown on the Contract Drawings.

In the event that a conflict is encountered and confirmed by the Engineer, the adjustment to alleviate the conflict shall be constructed in accordance with the applicable "Obstruction Detail" or as ordered by the Engineer.

12.06.03 Pipe Joints

1. **Standard Mechanical Joints**: In making mechanical joints, the pipe shall be centered in the bells. The surfaces of ductile iron pipe with which the rubber gasket comes in contact shall be thoroughly brushed with a wire brush just prior to assembly of the joint. The surfaces of PVC pipe shall be wiped clean with a cloth and soapy water. A pipe lubricant shall be brushed over the gasket just prior to installation. The gasket and gland shall be placed in position, the bolts inserted, and the nuts tightened finger tight. The nuts shall be tightened by means of a torque wrench, or as approved by the City, in such a manner that the gland shall be brought up evenly into the joint. The following range of bolt torques shall be applied:

Bolt Size (inch dia.)	Range of Torque (foot lbs.)
5/8	45 - 60
3/4	75 - 90
1	70 - 100

   If effective sealing is not obtained at a maximum torque listed above, the joint shall be disassembled and reassembled after thorough cleaning.

2. **DI Pipe Push-On Joints**: In making up the push-on rubber gasket joint, the gasket seat in the socket shall be thoroughly brushed with a wire brush and the gasket shall be wiped with a clean cloth. The gasket shall be placed in the socket with the large round end entering first so that the groove fits over the bend in the seat. A thin film of approved lubricant shall then be applied to the inside surface of the gasket that will come in contact with the entering pipe. The plain end of the pipe to be entered shall be thoroughly brushed with a wire brush and placed in alignment with the bell of the pipe to which it is to be joined. Ends of cut pipe shall be ground to a smooth bevel edge before inserting in bell. The joint shall be made up by exerting sufficient force on the entering pipe so that its plain end is moved past the gasket until it makes contact with the base of the socket.

   Backhoe buckets or excavation equipment are not to be applied directly to the pipe.

3. **PVC Pipe Push-On Joints**: Procedures for the making of PVC pipe push-on joints shall be similar in nature to those set forth in the preceding paragraph (except the bell shall be wiped with a clean cloth). Procedures shall strictly follow the manufacturer's printed instruction for the making of joints. In a like manner, all other PVC pipeline Work shall be performed in accordance with the manufacturer's recommendations.

Docusign Envelope ID: AFCB16A4-B390-89EA-8013-04580053D90F

4. **Restrained Joints**: Ductile iron mechanical joint pipe, fittings, and valves 12-inch and smaller that require restraint shall be installed using ductile iron retainer glands, as specified. The glands shall be installed in accordance with the manufacturer's recommendations. Glands using a frangible bolt for setting the restraining devices shall be tightened with standard wrenches.

   Glands using standard bolts for setting the restraining devices shall be tightened with a torque wrench. The assembly shall be given 2 heavy coats of a bituminous coating after installation.

   Restrained push-on joint pipe, fittings, and valves, where shown on the Contract Drawings, shall be with a restraining gland or restraining gasket, as specified.

   Pipe, fittings, and valve joints shall be restrained at locations shown on the Contract Drawings, or as specified. In addition, all other fittings and valves shall be installed using a ductile iron retainer gland.

   The following shall apply to various restrained joint/pipe size type:

Pipe Size (Inches)	Restrained Joint Type
2	No restrained joint allowed
4 through 12	Mechanical joint/retainer glands Tyton Pipe/Loc Fast Gasket, or equal
16 and larger	Mechanical joint/retainer glands TR Flex, or equal, pipe valves and fittings

12.06.04 Color Coding

Prior to backfilling, all pressure pipelines shall be identified with color coding. The applicable color codes, with light color stabilant, are:

Pipe Use	Color Coding
Potable Water	Safety Blue
Sanitary Sewer	Safety Green
Reclaimed Water	Safety Purple

1. **Coding on the Pipe**: HDPE and PVC pipe shall be colored at the point of manufacture. If black or white pipe must be used, pipe shall have City approved color coded ink lettering stamped on the pipe or shall be continuously taped with plastic adhesive tape using the color coding as stated above. Plastic adhesive tape shall be applied as follows:

   Black and white 2-inch and 4-inch pipe -- continuously taped at top center.

   Black and white 6-inch and larger pipe -- continuously taped at "10, 12, and 2 o'clock."

   Ductile iron pipe shall be continuously painted along the top one-third of the pipe with a 2-part high build epoxy-polyamide paint or approved equal. The paint shall be dry prior to the pipe being installed.

Docusign Envelope ID: AFCB16A4-B390-89EA-8013-04580053D90F

Ductile iron pipe wrapped in color coded polyethylene wrapping is not required to be painted.

2. **Coding above the Pipe**: Pipe shall have 3-inch detectable metallic tape of the proper color placed directly above the pipe and 12-inch below finished grade or 6-inch detectable tape between 12-inch and 24-inch below finished grade.

12.06.05 Valves and Valve Boxes

Valves shall be installed in a closed position, free from all distortion and strain, and left in satisfactory operating condition. Valves shall be tested in place by the Contractor, as far as practicable, and any defects in valves or connections shall be corrected to the satisfaction of the Engineer.

Tapping sleeves shall be pressure tested prior to making the tap.

Valve boxes with stay-put cover shall be vertical and concentric with the valve stem. Any valve box which is moved from its original position, preventing the operation of the valve stem, shall be satisfactorily reset by the Contractor at his expense.

Please see the Specifications for additional information for Valves.

12.06.06 Connections (Tie-ins) and Shutdowns

The Contractor shall furnish all labor and equipment necessary for the connection of approved pipelines to the existing system and the shutdown, removal or disconnection and plugging of existing pipelines as indicated on the Contract Drawings or as directed by the Engineer.

This may be required in instances where existing pipelines are to be abandoned or where a short segment of existing pipeline must be cut out and adjusted either vertically or horizontally to avoid a conflict with a proposed storm drain or storm drain structure, sanitary sewer, or other proposed improvement.

The Contractor shall make all taps and tie-ins required, under the direct observation of the Engineer.

12.07 PIPELINE CLEANING

All mains shall be pigged, cleaned and flushed to remove all sand and other foreign matter if required by the City and Engineer. The Contractor shall be responsible for developing a pigging and flushing plan to be submitted to the Engineer for approval prior to pigging and flushing. The Contractor shall dispose of all water used pigging and for flushing without causing a nuisance or property damage, in accordance with state and local requirements. Any permits or fees required for the disposal of flushing water shall be the responsibility of the Contractor.

Flushing water used by the Contractor shall be taken from an approved metered source. The water utility will provide the meter and designate the source. Potable and reclaimed flushing water shall be at the Contractor's expense. Reclaimed water should be used for sanitary force mains and potable

Docusign Envelope ID: AFCB16A4-B390-89EA-8013-04580053D90F

water can be used for all service types.

The cleaning of the pipeline shall be done by the controlled and pressurized passage of a polyurethane pig of varying dimensions, coatings and densities as determined by the City through the piping system.

A series of pigs shall be entered into the system at a point as near to the beginning as is logistically and mechanically feasible.

A launching assembly shall be used as the entrance point for the pig. This assembly shall allow for the following:

1. The entering of pigs into the system by providing the means to induce flow from an external source, independent of the flows and pressures immediately available from the system, on the back of the pig to develop sufficient pressure to force the pig through the system.
2. A means to control and regulate the flow.
3. A means to monitor the flows and pressures.
4. A means to connect and disconnect from the system without any disruption to the operation of the system.

The pig shall be removed or discharged from the system at a point as near to the end as is logistically and mechanically feasible.

The contractor shall be responsible for the retrieval of the pig at the discharge point. This may include setting a trap that will not disrupt normal flow and operations but will capture the pig and any debris. A retrieval assembly may also be used but said assembly shall be able to connect and disconnect from the system without any disruption to the operation of the system.

Alternative launching and retrieval methods shall be done with the prior approval of the City.

Any pig that cannot progress through the piping system shall be located by the contractor and removed by excavation of the pipe to remove the blockage. All pipe repairs shall be the responsibility of the contractor and shall be performed with as little disruption to the system as possible.

Any increase in pressure that cannot be accounted for, i.e. fittings or valves or additional cleaning runs, shall be investigated, per the Engineers' review and acceptance, by locating the pig at the beginning of the increased pressure and excavating to determine the cause of the pressure increase. All pipe repairs shall be the responsibility of the contractor and shall be performed with as little disruption to the system as possible.

Final flushing of the cleansed lines shall be performed after the last successful run of the pig as determined by the City. The contractor shall be responsible for all applicable flushing and disinfection requirements for potable water lines.

The contractor shall maintain and provide a report at the end of the cleaning procedure containing the following:

Docusign Envelope ID: AFCB16A4-B390-89EA-8013-04580053D90F

1. The pressures in the pipe during the pigging procedure.
2. Any inline problems encountered during the procedure including all excavations with detailed locations, reason for the excavation and any corrective measures taken to the pipeline.
3. A record of the pigs used, their sizes, styles and other pertinent information regarding what materials were used during the cleaning.
4. An analysis of the condition of the pipeline before and after the cleaning procedure.

12.08 TESTING AND DISINFECTION OF PRESSURE PIPELINES

All new pressure pipelines shall be subjected to a water pressure test between valves. In order to expedite the restoration of certain surface facilities, it may be required that individual sections between valves be tested as soon as the valves are installed. Disinfection shall be accomplished after the pressure test requirements have been met for the entire segment of pressure pipe.

The Contractor shall furnish all labor, materials, equipment, and chemicals to perform the required pressure tests and disinfection. All testing and disinfection will be subject to City inspection. All new valves shall be operated by the Contractor. However, all tie-in valves to the existing water system shall only be operated with the approval of, and in the presence of, the City, and shall be scheduled to be performed during the standard work hours of City staff, unless otherwise approved by the Engineer.

All existing valves shall be operated by the City or by the Contractor under the direct supervision of the City.

Testing and disinfection of pressure pipelines shall be completed per Flushing, Testing, and Disinfection section.

12.09 SURFACE RESTORATION AND MISCELLANEOUS

All surfaces disturbed by the Contractor shall be restored to their original condition in conformance to the Technical Specifications sections headed "Surface Restoration".

Sanitary sewers and laterals which cross a new potable water pipeline with less than 18 inches clear vertical separation, shall be replaced with 20 linear feet of ductile iron pipe, PVC pressure pipe (ANSI/AWWA C900-16), or SDR26 gravity pipe centered on the new pipeline, or as ordered by the Engineer.

Sanitary sewers and/or laterals which conflict with the new pipeline or are damaged by pipeline construction shall be reconstructed with ductile iron pipe, PVC pressure pipe (ANSI/AWWA C900-16), or SDR26 gravity pipe, as ordered by the Engineer.

Each valve box in an unpaved area shall have an 18-inch by 18-inch by 4-inch concrete pad. Pad shall be 1 inch above grade, and sod shall be so placed to maintain this 1 inch.

END OF SECTION

Docusign Envelope ID: AFCB16A4-B390-89EA-8013-04580053D90F

THIS PAGE INTENTIONALLY LEFT BLANK

Docusign Envelope ID: AFCB16A4-B390-89EA-8013-04580053D90F

SECTION 13 - DIRECTIONAL BORING OF PIPE

13.01 GENERAL

A. All existing structures, water and sewer lines, storm drains, utilities, driveways, sidewalks, signs, mail boxes, fences, trees, landscaping, and any other improvement or facility in the construction area that the Contractor disturbs for his own construction purposes shall be replaced to original condition at no additional cost to the City.

B. For “Navigable Waters of the U.S.” reference 33 of the Code of Federal Regulations, Part 329.

C. For “Waters of the U.S.” reference 33 of the Code of Federal Regulations, Part 323.

D. For “Waters of the State” reference Section 62-301 of the Florida Administrative Code.

13.02 TESTING

A. In place soil compaction tests shall be performed by a qualified testing laboratory.

B. Compaction tests shall be taken at every excavation, except in the road crossings or road shoulders; tests are to be taken according to current FDOT Standards.

C. All pipe shall be tested in accordance with the appropriate material specifications.

D. Reference Standards: American Society for Testing and Materials (ASTM), D1557, Moisture-Density Relations of Soils Using 10-lb. Rammer and 18-in. Drop.

E. The density of soil in place shall be a minimum of 95 percent in accordance with ASTM test 1557-70T, Method A or C.

13.03 QUALIFICATIONS

A. Pipe Manufacturer: All pipe and fittings shall be furnished by a single manufacturer who is fully experienced, reputable and qualified in the manufacture of the items to be furnished.

B. Drilling Supervisor: The Contractor shall provide a competent boring specialist who shall remain on the project site during the entirety of the directional boring operation. This includes, but is not limited to, drilling fluid preparation, seaming, boring and pulling. The boring specialist shall have a minimum of five years of experience in supervising directional bores of similar nature, diameter, materials and lengths.

C. Pipe Fusion: All boring and fusing equipment shall be certified for operation. The Contractor responsible for thermal butt fusing pipe and fittings shall have manufacturer certification for performing such work or a minimum of five years of experience performing this type of work. If no certification is available, written documentation of the required work experience shall be submitted for review and acceptance.

Docusign Envelope ID: AFCB16A4-B390-89EA-8013-04580053D90F

D. Drilling Fluid Specialist: The personnel responsible for supervising the supply, mixing, monitoring fluid quality, pumping and re-circulation system proposed for the drilling fluid shall have a written certification issued by the Drilling Fluid manufacturer for performing such work or a minimum of five years of experience performing this type of work. If no certification is available, written documentation of the required work experience for the proposed personnel shall be submitted for review and acceptance.

13.04 SUBMITTALS

A. Detailed description including specifications and catalog cuts for:

1. Shop drawings and catalog data for all HDD equipment.
2. The pipe manufacturer's maximum degree of radial bending allowed for the pipe when full and when empty and pullback force recommended setting.
3. Steering and tracking devices including specific tracer wire.
4. Drilling fluids; the drilling fluid submittal shall include the ratio of mixture to water, including any additives, based on the Contractor’s field observations prior to construction, knowledge and experience with drilling in similar conditions, and any soil data provided in the Contract Documents, which shall be verified by the fluid specialist.
5. Shop drawings for the breakaway swivel, including the method of setting the swivels’ break point and set point to be used.
6. Shop drawings for sizing of the mandrel for pull through testing
7. Pipe assembly procedure, details of support devices, and staging area layout including methods to avoid interference with local streets, driveways, and sidewalks.
8. Details of pipe fusion procedures and copies of the fusion technician qualification certification or documentation.
9. Drilling fluid technician qualification certification or documentation

B. Bore Plan: For all contiguous piping installations over 300 feet in length or any installations for piping larger than 4” in diameter, the Contractor shall submit a Bore Plan that includes the following at least 21 days prior to beginning work:

1. Contact information and experience for the drilling fluid specialist.
2. The number of passes the bore will include to get the product pipe installed.
3. The pilot bore and all reaming bore sizes including the final pullback with the product pipe.
4. Drilling rod length in feet.
5. The pilot bore, pre-ream bores (if any) and pullback production rate in minutes per (drilling) rod to maintain adequate mud flow.
6. Details of the entry and exit pit locations along with entry and exit angles for the bore, drawn to scale, depicting the position of all required equipment, access points, existing facilities to remain in place, existing traffic lanes to be maintained in operation, office trailers and storage sites.
7. The method of fusing or joining pipe of adjacent bores to ensure that the joint is on grade with the installed pipe.

C. If the Contractor is planning on deviating from bid document Profile, then the Contractor is required to submit detailed calculations supporting the modifications. The calculations

Docusign Envelope ID: AFCB16A4-B390-89EA-8013-04580053D90F

shall consist of the following:

1. Predicted and allowable pulling loads and bending stress, and the minimum allowable bending radius (Provide an estimate of the pulling loads and bending stress at characteristic points along the drill path when the curvature of the drill path changes).
2. Calculations for safety factors against ring collapse of the pipe during pullback and confirm ring deflection is within limits.
3. Graphical representation of evaluation of frac-out risks, showing maximum allowable and minimum required pressures at all critical locations along the bore alignment. The calculations shall be conducted by or under the direct supervision of a Professional Engineer licensed in the State of Florida, who shall stamp and seal the calculations.
4. The deviation drawings shall include a HDD Profile, plan view and cross-section. The Contractor is also recommended to submit deviation drawings for larger bores for site layout plans (Rig and Product Pipe Layout site) and pipeline stringing area (rollers).

D. Bore Schedule: For all contiguous piping installations over 300 feet in length or any installations for piping larger than 4-inches in diameter, the Contractor shall submit a detailed schedule for the HDD installation at least fifteen days prior to mobilization. The detail schedule shall identify all major construction activities and durations, with beginning and completion dates shown. The detail schedule shall be updated at least every two weeks or more frequently, as directed by the Engineer, and shall include but not limited to the following items:

1. Pre-construction walk over and inspection
2. Regular Mobilization and set-up
3. Pilot bore
4. Pre-reaming and reaming
5. Layout and thermal butt fusing of pipe
6. Pressure Testing of pipe prior to pullback when practical or as directed by the Engineer.
7. Final reaming and pullback of product pipe.
8. Annulus grouting after installation (optional).
9. Mandrel/pig test to confirm deformations of product pipe are within allowable tolerances.
10. Cleanup, surface restoration, and demobilization.

F. Prepare a Frac-out and Surface Spill Contingency Plan. Submit the plan to the Engineer prior to construction. Submit a letter of intent signed by an authorized representative of Contractor, confirming that the plan will be followed. The contingency plan for inadvertent returns/hydrofracture shall address all potential pathways for release of drilling fluid, and shall address containment, cleanup, and mitigation measures as well as inspection and reporting procedures and points of contact for regulatory and permitting agencies. The Plan shall address releases to the ground surface and controlled releases at any relief wells installed by the Contractor. Describe the location, installation, monitoring, and abandonment procedures for any relief wells. Provide stand-by equipment on-site to recover fluids via vacuum. Describe equipment and procedures

Docusign Envelope ID: AFCB16A4-B390-89EA-8013-04580053D90F

to private residence yard areas to inspect for and clean up fluid releases.

G. The Contractor shall submit an as-built profile of the pilot bore within twenty-four (24) hours of completion of the pilot bore to the Engineer and City Representative. Contractor shall receive written review and acceptance from either party in order to continue with the proposed profile alignment.

H. Furnish a Bore Path Report to the City within seven days of the completion of each bore path. Data collected by the City Representative does not relieve the Contractor from the responsibility of recording his own data. Include the following in the report:

1. Location of project, project name and number
2. Name of person collecting data, including title, position and company name
3. Investigation site location (Contract plans station number or reference to a permanent structure within the project right-of-way)
4. Driller's Log & identification of the detection method used
5. Elevations and offset dimensions of installed pipe as referenced to the drawings
6. Data log of pullback force during product pipe installation
7. All failed bores. Include length of pipe left in place and explanation of failed installation.

13.05 MATERIALS

A. Incidental materials that may or may not be used to install the product depending on field requirements are not paid for separately and will be included in the cost of the installed product.

B. Drilling Fluids shall use a mixture of bentonite clay or other approved stabilizing agent mixed with potable water with a pH of 8.5 to 10.0 to create the drilling fluid for lubrication and soil stabilization. Vary the fluid viscosity to best fit the soil conditions encountered. Contractor shall have appropriate additives for drilling fluid available for different soil conditions that may be encountered. Do not use any other chemicals or polymer surfactants in the drilling fluid without written consent from the City. Certify to the City in writing that any chemicals to be added are environmentally safe and not harmful or corrosive to the product pipe.

C. For drilling operations that will be below waters of the State of Florida, only bentonite free drilling fluids shall be used. Acceptable products are BioMax, manufactured by M-I Swaco, Inc., P.O. Box 2216, Laurel, Mississippi 39440, Phone: (800) 731-7331 or Bio-Bore, manufactured by Baroid Drilling Fluids, Inc., P.O. Box 1675, Houston, Texas 77251, Phone: (731) 987-5900 or approved equal.

D. Identify the source of water for mixing the drilling fluid. Approvals and permits are required for obtaining water from such sources as streams, rivers, ponds or fire hydrants. Any water source used other than potable water may require a pH test.

E. Directional Drilling/Boring pipeline construction shall require the installation of minimum #10 AWG Copper Clad, Extra High Strength Steel tracer wire with minimum 1,150 lb.

Docusign Envelope ID: AFCB16A4-B390-89EA-8013-04580053D90F

break load, with a minimum 45 mil HDPE insulation thickness. Refer to the Specifications for tracer wire details.

F. Breakaway connectors shall be supplied by DCD Design & Manufacturing, Condux International, Inc. or approved equal.

13.06 SITE CONDITIONS

A. Carry out excavation for entry, exit, recovery pits, slurry sump pits, or any other excavation as specified in the Contract documents. Sump pits are required to contain drilling fluids if vacuum devices are not operated throughout the drilling operation, unless approved by the City.

B. Within 48 hours of completing installation of the boring product, clean the work site of all excess slurry or spoils. Take responsibility for the removal and final disposition of excess slurry or spoils. Ensure that the work site is restored to pre-construction conditions or as identified on the Contract Drawings.

C. Exposure of product pipe to sunlight shall be limited to 14 consecutive days unless approved by the City.

D. The pipe shall be supported at intervals along its length with rollers or Teflon pads to minimize frictional forces when being pulled, and to hold the pipe above the ground. Surface cuts or scratches greater than or equal to the maximum defect depth in 3.08 E are not acceptable.

13.07 DAMAGE RESTORATION & REMEDIATION

A. The Contractor shall take responsibility for restoration for any damage caused by heaving, settlement, separation of pavement, escaping drilling fluid (frac-out), or the directional drilling operation, at no cost to the City.

B. When required by the City, provide detailed Contract Drawings which show how damage to any roadway facility will be remedied. These details will become part of the Record Drawings Package. Remediation Plans must follow the same guidelines for development and presentation of the Record Drawings. When remediation plans are required, they must be approved by the City before any work proceeds.

C. For HDD operations that will be below waters of the State of Florida, the contractor shall be responsible for any damage caused by the drilling operation, including, but not limited to, fracturing of the channel bottom. Any State or Federal required environmental cleanup due to the release of drilling fluids into State waters shall be at the Contractor's expense. The Contractor may at his own expense increase the depth of his drilling operations upon the approval from the City.

13.08 QUALIFICATIONS FOR REJECTION OF DIRECTIONAL BORE

A. The City may reject any portion of the work that is deemed to be non-responsive to the Contract requirements or not in conformance with approved Contract Drawings and

Docusign Envelope ID: AFCB16A4-B390-89EA-8013-04580053D90F

submittals, and for other factors including the following:

1. Failed Bore: When there is any indication that the installed product has sustained damage, stop all work, notify the City and investigate damage. The City may require a pressure and / or mandrel test at no additional cost to the City and shall have a City representative present during the test. Perform all testing within 24 hours unless otherwise approved by the City. Furnish a copy of the test results and all bore logs to the City for review and acceptance. The City is allowed up to 5 working days to approve or determine if the product installation is not in compliance with the specifications.
2. Obstructions: If an obstruction is encountered during boring which prevents completion of the installation in accordance with the design location and specification, the pipe may be taken out of service and left in place at the discretion of the City.
3. Pull-back Failure: If the installed breakaway device should fail during pull back.
4. Loss of Drilling Fluids: If the drilling fluid is “lost” during the pull back of the product and cannot be regained within the required timeframe of the manufacturer or if more than a reasonable amount of fluid is used to fill an unknown void and flow cannot be regained. No pipe shall be pulled without visible flow of drilling fluid.
5. Test Failure: If the pipe shall fail a hydraulic pressure test or mandrel test as specified by the City.
6. Damaged Pipe: If at any time when the product is pulled back and any exposed areas have a greater than allowable “gouging” or visible marring of the pipe per the table in 3.08 G.
7. Alignment Tolerance Exceeded: If the vertical and horizontal limits are not within tolerances.
8. Defective Material: Any other defect in material or workmanship which would affect the quality, performance, or installation life of the installed pipeline.

B. Remediation: All rejected bores shall be at the Contractor’s expense to correct and provide a satisfactory installed product. The Contractor shall submit to the City a revised installation plan and procedure for review and acceptance before resuming work. The City may require non-compliant installations to be filled with excavatable flowable fill or to be completely removed at no additional cost to the City.

13.09 PRODUCT LOCATING AND TRACKING

A. The City recognizes walkover, wire line, and wire line with surface grid verification, or any other system as approved by the City, as the accepted methods of tracking directional bores. Use a locating and tracking system capable of ensuring that the proposed installation is installed as intended. The locating and tracking system must provide information on:

1. Clock and pitch information
2. Depth
3. Transmitter temperature
4. Battery status
5. Position (x,y)

Docusign Envelope ID: AFCB16A4-B390-89EA-8013-04580053D90F

6. Azimuth, where direct overhead readings (walkover) are not possible (i.e. sub aqueous)

B. Ensure proper calibration of all equipment before commencing directional drilling operation.

C. Prepare the Driller's Log. Take and record alignment readings or plot points such that elevations on top of and offset dimensions from the center of the product to a permanent fixed feature are provided. Such permanent fixed feature must have prior approval of the City. Provide elevations and dimensions at all bore alignment corrections (vertical and horizontal) with a minimum distance between points of 10 feet. Provide a sufficient number of elevations and offset distances to accurately plot the vertical and horizontal alignment of the installed product.

13.10 PRODUCT BORE HOLE DIAMETER

Minimize potential damage from soil displacement/settlement by limiting the ratio of the bore hole to the product size. The size of the back reamer bit or pilot bit, if no back reaming is required, will be limited relative to the product diameter to be installed as follows:

Table 2-1. Recommended Relationship between Product Diameter and Reamed Diameter

Product Diameter	Reamed Diameter
< 8"	Diameter of product + 4"
8" – 24"	Diameter of product x 1.5
> 24"	Diameter of product + 12"
*Horizontal Directional Drilling Good Practices Guidelines – HDD Consortium	

13.11 EQUIPMENT REQUIREMENTS

A. The HDD equipment selected by the Contractor shall be capable of drilling, steering, tracking, reaming and installing the pipeline through all the subsurface conditions that may be present at the site.

B. Match equipment to the size of pipe being installed. Obtain the City's review and acceptance for installations differing from the above chart. Ensure that the drill rod can meet the bend radius required for the proposed installation.

C. All HDD equipment shall have an electronic data logger to record pull back force during all pipe installations.

D. All HDD equipment that has the capability to exceed the maximum recommended pulling force shall have a breakaway swivel properly attached to the product pipe that will release if the pullback force exceeds the pipe manufacturer's recommended pulling force.

Docusign Envelope ID: AFCB16A4-B390-89EA-8013-04580053D90F

13.12 THRUST / PULLBACK REQUIREMENTS

The Contractor shall provide as part of the required working drawings submittal complete data regarding the operational and maximum thrust or pulling forces to be used for the initial drill head and back-reamer installations, and the final pull-back of the pipe. Gages or other measurement tools shall be used to monitor the forces being used.

13.13 INSTALLATION PROCESS

A. Contractor shall contact the City and Engineer at least forty-eight (48) hours before each of the following activities:
   1. The setup of a drill rig pit,
   2. The start of the pilot bore,
   3. The pull back of the product pipe. Upon completion of the pilot-hole phase of the operation, a complete set of as-built records shall be submitted in duplicate to the Engineer. These records shall include copies of the plan and profile drawing, as well as directional readings recorded during the drilling operation.

B. Ensure adequate removal of soil cuttings and stability of the bore hole by monitoring the drilling fluids such as the pumping rate, pressures, viscosity and density during the pilot bore, back reaming and pipe installation. Relief holes can be used as necessary to relieve excess pressure down hole. Obtain the City's review and acceptance of the location and all conditions necessary to construct relief holes to ensure the proper disposition of drilling fluids is maintained and unnecessary inconvenience is minimized to other facility users.

C. At all times during the pilot bore the Contractor shall provide and maintain a bore tracking system that is capable of accurately locating the position of the drill head in the x, y, and z axes. The Contractor shall record these data at least twice per drill pipe length or every fifteen (15) feet, whichever is more frequent.

   1. Contractor shall monitor and record x, y, and z coordinates relative to an established surface survey benchmark, from downhole survey data using downhole wireline system. "Tru-Tracker" energized surface grid, or equivalent, shall be installed and used to supplement the wireline system. The "Tru-Tracker" grid shall encompass the entire area of the bore including underwater across the water. Alternatively, the Contractor may propose fixed "TruTracker" grids on land outside the waterway, supplemented by moveable grids on floating templates that can be temporarily anchored and surveyed while drilling the pilot hole. The moveable template should be sufficiently large to encompass the active drilling area for a two hour drilling period and should be at least as wide as the maximum depth of the bore. The grids shall be surveyed to establish horizontal and vertical position to 0.1 feet accuracy. The data shall be continuously monitored and recorded at least twice per drill pipe length or every fifteen (15) feet, whichever is most frequent.

   2. Deviations between the recorded and design bore path shall be calculated and reported on the daily log. If the deviations exceed tolerances specified

Docusign Envelope ID: AFCB16A4-B390-89EA-8013-04580053D90F

elsewhere, such occurrences shall be reported immediately to the City and Engineer. The Contractor shall undertake all necessary measures to correct deviations and return to design line and grade.

3. Drilling fluid pressures and flow rates shall be continuously monitored and recorded by the Contractor. The pressures shall be monitored at the pump and within the annular space with a downhole pressure-sensing tool located within thirty (30) feet of the drilling head.

4. Maximum allowable drilling speeds shall be calculated by the Contractor for pilot boring and each reaming pass and shall not be exceeded for pilot boring or reaming passes. Measurements shall be taken every fifteen (15) feet.

5. The Contractor shall measure and record drilling fluid viscosity and density at least three times per shift with at least two hours between readings, using calibrated Marsh funnel and mud balance. These measurements shall be included in daily logs submitted to the Engineer. The Contractor shall document modifications to the drilling fluids, by noting the types and quantities of drilling fluid additives and the dates and times when introduced. The reason for the addition of drilling fluid additives or other modifications shall be documented and reported.

6. The Contractor shall measure and record the pH on a regular basis (three times per shift with at least two hours between readings) with pH strips, paper or a pH meter.

7. The drilling fluid report shall include desired mud properties including weight, viscosity in cP, yield point in lb/100 sf, measured mud weight, funnel viscosity, plastic viscosity, fluid loss, % solids, chlorides, and detailed log of type and quantity of bentonite and all additives.

8. The Contractor shall constantly monitor and record the circulating volume, particularly for the early detection of drilling fluid losses, or thinning, or the danger of borehole collapse. Ground upheavals can also be detected early from such differences, and necessary action can be implemented to prevent further damage.

9. The Contractor shall constantly monitor and record the solid (sand) content to assure there is no significant increase, which can diversely impact efficiency of the circulations system.

D. The Contractor shall determine the pull-back rate in order to allow the removal of soil cuttings without building excess down-hole pressure and to avoid local heaving, or spills. Contain excess drilling fluids at entry and exit points until they are recycled and separated from excavated materials or removed from the site or vacuumed during drilling operations. Ensure that entry and exit pits and storage tanks are of sufficient size to contain the expected return of drilling fluids and soil cuttings. The bored hole shall always be maintained full of drilling fluids for support of surfaces, and the fluid re-circulation equipment shall operate continuously until the pipe installation is completed

Docusign Envelope ID: AFCB16A4-B390-89EA-8013-04580053D90F

and accepted by the City.

E. Ensure that all drilling fluids are disposed of or recycled in a manner acceptable to the appropriate local, state, or federal regulatory agencies. When drilling in suspected contaminated ground, test the drilling fluid for contamination and appropriately dispose of it. Remove any excess material upon completion of the bore. If in the drilling process it becomes evident that the soil is contaminated, contact the City immediately. Do not continue drilling without the City's approval.

F. The timing of all boring processes is critical. Install a product into a bore hole within the same day that the pre-bore is completed to ensure necessary support exists. Once pullback operations have commenced, the operation shall continue without interruption until the pipe is completely pulled into the borehole.

G. All prepared pipe that is being used for installation shall be adequately supported off the ground along the entire length to avoid damaging of the material during pullback due to ground surface conditions. Surface cuts or scratches greater than or equal to the maximum defect depth are not acceptable.

Pipe Size In.	Max. Defect Depth In.
4	1/16
6	1/11
8	5/32
10	3/16
12	1/4
> 12	Per Pipe Manufacturer's Recommendations

H. The drilling fluid specialist shall remain on the project site during the entirety of the directional boring operation to ensure proper mixture and production of drilling fluids needed for the bore.

I. Upon successful completion of the pilot hole, the borehole shall be reamed to a minimum of 25 percent greater than the outside diameter of the pipe being installed.

J. For bores with more than two radii of curvature (entrance and exit), the borehole should be reamed up to 50 percent larger than the outside diameter of the carrier pipe. Prereaming may be necessary dependent on size of material to be pulled.

K. Additional passes for prereaming may be required for larger pipe. Incremental increases shall be used as needed until appropriate bore hole size has been achieved.

L. Prereaming must be accomplished with no product attached to the reamer head on all bore pipe 6-inches and larger. The bore product may be pulled back on final pass of prereaming upon prior approval from the City.

M. After reaming the borehole to the required diameter, the pipe shall be pulled through the hole. In front of the pipe shall be a breakaway swivel and barrel reamer to compact the borehole walls.

Docusign Envelope ID: AFCB16A4-B390-89EA-8013-04580053D90F

N. The Contractor shall not ream at a rate greater than the drilling equipment and drilling fluid system are designed to safely handle.

O. Install all piping such that their location can be readily determined by electronic designation (tracer wire) after installation.

1. For all pipe installations, externally attach two (2) tracer wires; to the top of product pipe and secure in place with duct tape or 10-mil thickness polyethylene pressure sensitive tape at every joint and at 5 foot intervals.

P. Connect any break in the conductor line before construction with an electrical clamp, or solder, and coat the connection with a rubber or plastic insulator to maintain the integrity of the connection from corrosion. Clamp connections must be made of brass or copper and of the butt end type with wires secured by compression. Soldered connections must be made by tight spiral winding of each wire around the other with a finished length minimum of 3 inches overlap. Tracking conductors must extend 2 feet beyond bore ends. Test conductors for continuity. Each conductor that passes must be identified as such by removing the last 6 inches of the sheath. No deductions are allowed for failed tracking conductors. Upon completion of the directional bore, the Contractor shall demonstrate to the City that the wire is continuous and unbroken through the entire run of the pipe by providing full signal conductivity (including splices) when energizing for the entire run in the presence of the City Representative. If the wire is broken, the Contractor shall repair or replace it at no additional cost to the City.

Q. The pilot bore shall follow the design path of the bore shown on the Drawings:

1. Horizontal and vertical deviations shall be less than plus or minus three feet from the design path centerline. The Contractor shall continuously monitor horizontal and vertical position and record the position at least twice per drill pipe length, or at fifteen (15) feet intervals, whichever is most frequent.
2. The radius of curvature shall not be less than that shown on the Drawings. The radius of curvature shall be calculated over the distance of three drill pipe sections. If design radius of curvature is exceeded, the Contractor shall re-drill the pilot hole at no extra cost to the contract.
3. The location of the entry and exit points shall be as shown on the Drawings. The Contractor shall be solely responsible for all work necessary to correct excessive deviations from line and grade, including re-drilling, redesigning connections, and acquiring additional easement, at no additional cost to the Owner and without schedule extension.

R. Inadvertent Returns (Frac-Outs) and planned returns (at relief wells):

1. Contractor shall be responsible for avoiding any impact to existing utilities, structures, facilities, pools, and waterways in the Project area during the drilling operation. If the drilling fluid starts leaking to the surface (other than at the entry and exit points or relief wells), or if fluid loss results in surface movement, Contractor shall cease drilling until fluid loss volumes can be brought under control to minimize any inadvertent returns in the Project area. In such event, notify Engineer immediately. The Contractor shall clean up any locations where

Docusign Envelope ID: AFCB16A4-B390-89EA-8013-04580053D90F

drilling fluid surfaces, including releases at relief well locations. Contractor shall pay particular attention to the potential of inadvertent returns washing out along existing utility crossings and shall have preventive measures in place to prevent these occurrences from happening. Contractor shall be fully responsible for all damages caused by the force main installation operations. The pilot bore shall be pre-reamed and reamed using equipment and methods submitted by the Contractor. The Contractor shall completely ream the borehole to the final diameter prior to pull back, when practical or as directed by the Engineer.

O. The Contractor shall perform hydrostatic water pressure test in accordance with the manufacturer's guidelines prior to product pipe pullback.

13.14 PIPELINE TESTING

A. Hydrostatic Testing
   1. Refer to Specifications for pipe material.

B. Mandrel Deflection Testing Process

   1. The deflection test for flexible pipe systems shall be performed by pulling a mandrel through the pipeline. The mandrel shall have a diameter equal to 80 percent of the inside diameter of the pipe system being tested. When the mandrel cannot be pulled through the pipeline the Contractor shall locate and correct the defect to the satisfaction of the City. After the defect is corrected and trench backfilled, the section of line shall then be retested to compliance.

   2. Deflection tests shall be performed not sooner than 24 hours after completion of the pipe pull-back. The Contractor shall take measures to ensure the pipe is clean as not to interfere with the mandrel test.

   3. The mandrel types that can be used are:

      a. a rigid, nonadjustable, odd number of legs (9 legs minimum), mandrel having an effective length not less than its nominal diameter; and to be fabricated of steel, fitted with pulling rings at each end, stamped or engraved on some segment other than a runner indicating the pipe material specification, nominal size and be furnished in a suitable carrying case labeled with the same data as stamped or engraved on the mandrel.

      b. If approved by the City, a smaller diameter piece of similar material that is approximately double the nominal diameter in length and meets the 80% reduction of the inside diameter of the pipe being tested. The pipe length may need to be adjusted to ensure the pipe section cannot become skewed and become lodged; this may cause the test to fail.

   4. The mandrel shall be pulled through the pipe by hand to ensure that maximum allowable deflections have not been exceeded or that "necking" has not occurred. Prior to use, the mandrel shall be inspected by City personnel. Use of an unapproved mandrel or a mandrel altered or modified after inspection will

Docusign Envelope ID: AFCB16A4-B390-89EA-8013-04580053D90F

invalidate the test. If the mandrel fails to pass, the pipe will be deemed over deflected or necked.

5. Over deflected or necked pipe shall be abandoned and reinstalled. The replaced pipe shall be tested for deflection not sooner than 24 hours after installation.

C. The following deficiencies in the flexible pipe system installation shall be corrected by the Contractor at no cost to the City:

1. Over deflections
2. Stretched or “Necked” Pipe
3. Damaged Pipe
4. Improper Pipe Welds
5. Infiltration Points
6. Debris in the line

D. The City will not accept a credit, maintenance bond, or any other form of compensation in lieu of corrective measures that may be required to correct any sections of flexible pipe system that are improperly installed or do not meet the requirements of these specifications. In addition, all corrective measures proposed by the Contractor shall be approved by the City. In addition, should repairs of the flexible pipe system be accomplished by the use of any unauthorized materials or procedure, the City will require replacement of those substandard portions or repairs made to conform to the requirements of these specifications.

END OF SECTION

Docusign Envelope ID: AFCB16A4-B390-89EA-8013-04580053D90F

THIS PAGE INTENTIONALLY LEFT BLANK

Docusign Envelope ID: AFCB16A4-B390-89EA-8013-04580053D90F

SECTION 14 - JACKING AND BORING

14.01 SCOPE OF WORK

The Contractor shall furnish all labor, equipment, materials and incidentals required to install road or railroad crossings as shown on the Contract Drawings and as specified herein.

The Contractor is responsible for verifying the location of all utilities in the ground before commencing the jack and bore operation. No compensation will be allowed for labor or materials for unused casing. The Contractor will be responsible for all damage incurred to roadways or utilities by his operation.

14.02 OPERATIONS IN THE CITY OF ST. PETE BEACH OR STATE OF FLORIDA PROPERTY

All work affecting The City of St. Pete Beach, Florida Department of Transportation (FDOT), any other governmental agency's right-of-way or facilities, or railroad right-of-way shall be carried out to the full satisfaction of the applicable Department's authorized representative. The Contractor shall be responsible to meet any and all requirements of the Department of Transportation, railroad, or other agency pertaining to the specific project and shall conduct all his work accordingly.

Prior to the start of the jacking operation, a detailed jacking plan shall be submitted to the City for review and acceptance. No work shall be permitted until the submittals are accepted.

Prior to construction, a minimum of three (3) working days written notice prior to start of the actual work shall be given to the City and to the FDOT or other applicable agency.

A Bore Path Report shall be submitted with in three (3) days of completion of the bore.

The Contractor shall install, maintain and leave in place any sheeting, underpinning, cribbing and other related items (other than that required for the jacking pits) to support any structures or facility on the right-of-way owned by either The City of St. Pete Beach, FDOT or other governmental agency or railroad entity. The Contractor, at his expense, may be directed by FDOT, other applicable agency, or the City, to leave sheeting in place.

The Contractor shall perform all necessary soil test borings to determine actual soil conditions and shall utilize the results of said borings to determine the procedures required for each jack and bore operation, including, but not limited to, the presence of rock and necessary dewatering requirements.

No wires, equipment, or other appurtenances shall be permitted to be placed across or pass across State property without the express written permission of FDOT’s authorized representative.

All equipment used by the Contractor on State property may be inspected by the State and shall not be used if it is deemed unsatisfactory by an authorized State representative. State

Docusign Envelope ID: AFCB16A4-B390-89EA-8013-04580053D90F

highways shall be kept free of obstructions at all times.

No blasting shall be permitted under or adjacent to any State highways.

The Contractor shall be responsible for all damages arising from his negligence or failure to comply with any State or The City of St. Pete Beach regulations or requirements or deviations from the Contract Documents.

All State highway crossings shall be performed and completed in a manner fully satisfactory to the Department of Transportation and The City of St. Pete Beach.

14.03 SHOP DRAWINGS

The Contractor shall furnish working drawings showing all fabrication and construction details for the jacked crossings.

14.04 SUBMITTALS

Contractor shall submit a Jacking Plan that includes the following:

1. Site layout plan for entry and exit pit locations, drawn to scale, depicting the position of all required equipment, access points, existing facilities to remain in place, existing traffic lanes to be maintained in operation, and storage sites.
2. Qualification information on jack/bore contractor.
3. Manufacturer's information on equipment to be used.
4. Methods and materials for retaining walls for jacking and receiving pits.
5. Bore Report that details final alignment, dimensions, and record documentation.

14.05 CASING PIPE

All casings shall be installed accurately to line and grade and shall meet all requirements of the prevailing rights-of-way holder. Casings shall be new and of domestic material and manufacture.

Pipe casing shall be welded steel conforming to the requirements of AWWA C200 and ASTM A-139,Grade B. The pipe shall be coated internally and externally with Tnemec 46H-413 Hi-Build Tneme-tar per manufacturer's recommendations.

Joints shall be full penetration butt welded in accordance with the requirements of AWWA C206. The joints shall be double groove welded with continuous circumferential welds and field lined and coated in accordance with AWWA C203.

All casings shall be in conformance with the specifications as shown on the plans and detail sheets.

Docusign Envelope ID: AFCB16A4-B390-89EA-8013-04580053D90F

14.06 CARRIER PIPE

All carrier pipe shall be Class 50 ductile iron pipe with joint restraints or fully restrained PVC pipe.

14.07 CASING SPACERS

The carrier pipe shall be installed in the casing on spacer skids. The supports shall be dimensioned to center the carrier pipe in the casing with a top clearance of one-half inch. The height of the supports and runners combined shall be sufficient to provide not less than three-quarter inch between the casing pipe and outside diameter of the carrier pipe joints.

Adequate casing spacers shall be provided to properly support the carrier pipe and maintain pipe deflection within the pipe manufacturer's requirements. In any case, not less than three spacers for each individual length of carrier pipe shall be provided.

For metallic casing spacers, bolts, nuts, and washers shall be 316 stainless steel. Shell shall be min. 14 gauge 304 stainless steel. Risers shall be min. 10 gauge 304 stainless steel.

For metallic casing spacers, each shell shall be lined with a min. thickness of 0.090" ribbed PVC/EPDM extrusion with a min. Durometer "A" 85-90 hardness.

For metallic casing spacers, each riser shall have runners (bearing surfaces) made of ultra-high molecular weight polyethylene (UHMWPE) or glass filled polymer plastic to provide abrasion resistance and a low coefficient of friction.

For nonmetallic casing spacers, the runners (bearing surfaces) shall be of a projection type. The projections shall be made of preformed sections of HDPE or virgin polypropylene and shall conform to ISO 9001:2000 for strength and quality. The casing spacers shall be sized in accordance to the manufacturer's recommendations.

14.08 TUNNEL LINER PLATES

Tunnel liner plates shall be asphalt coated galvanized steel plates. The Contractor shall submit plans signed and sealed by a registered Engineer in the State of Florida and written installation procedures with his request for approval.

14.09 CASING END SEALS

Contractor shall provide properly sized rubber end seals to completely close both openings on either side of the casing.

Ends seals shall be pull on (seamless) or wrap around with 316 stainless steel straps for securing to the carrier pipe and the casing.

The seals shall have min. thickness of 1/8 inch of specially compounded synthetic rubber.

Docusign Envelope ID: AFCB16A4-B390-89EA-8013-04580053D90F

14.10 CONSTRUCTION

The Contractor shall provide all labor, material, equipment and appurtenances required for jacking the casing pipe beneath the roadway or railroad tracks. The casing pipe shall be welded steel pipe and jacked in one continuous operation at the locations shown on the drawings. Once the operation starts, jacking shall not be discontinued. Proper alignment and elevation of the casing pipe shall be consistently maintained throughout the jacking operation. The casing pipe shall be installed by jacking and to the length shown on the plans.

The installation of the casing and boring at the head of the casing shall be one simultaneously. Track guides of sufficient length to carry the power unit and pipe installation shall be used, in order to maintain proper line and grade of the casing. Surplus and unsuitable excavated material shall be disposed of by the Contractor.

The Contractor shall shore the jacking pits with sheeting or such other materials as required. Sheeting shall be driven to a sufficient depth below the invert of the steel casing pipe to resist any pressure developed by the soil outside the jacking pit. Sheeting shall terminate not less than 3-feet, 6-inches above existing grade. The Contractor shall install adequate protective railing or temporary fences around the pits within the crossing right-of-way at all times during construction.

The sections of casing pipe shall be field welded in accordance with the applicable portions of AWWA C206 for field welded water pipe joints. Steel casing pipes shall receive one (1) internal and external coat of Tnemec 46H-413 Hi-Build Tneme-tar applied in accordance with manufacturer's recommendation.

All surfaces shall be smooth and uniform without bulges, dents, or warping of lengths, and only new pipe shall be used. Finished lengths of pipe shall be furnished with beveled cut ends to facilitate proper welding of transverse joints. The diameter and wall thickness of the pipe shown on the drawings is the minimum required and no extra compensation shall be claimed by the Contractor if a larger and thicker pipe is used. It will be the Contractor's responsibility in the event that the casing does buckle or collapse during these operations.

At the completion of the jacking operations, the Contractor shall be required to leave all sheeting in place. The top of the sheeting shall be cut off 36-inches below finished grade.

The Contractor shall be responsible for preventing voids outside the casing pipe. Should they occur, the Contractor may be directed to fill them with grout in a method approved by the City. The Contractor shall exercise care in the sleeve removal to prevent voids.

The Contractor shall be responsible for furnishing, installing and removing the thrust block or restraint which was employed in driving the sleeve forward. No additional payment for the jacking restraint shall be made other than the unit price for this item. The entire jacking operation shall be discussed and accepted by the City prior to commencing jack and bore operation. After completion, the backup structures shall be removed in part or whole to permit construction of the pipeline in the sleeve.

Tunneling for the installation of large carrier pipe may be substituted for jacking and boring

Docusign Envelope ID: AFCB16A4-B390-89EA-8013-04580053D90F

when approved by the Engineer.

14.11 INSTALLING CARRIER PIPE IN CASING PIPE

The Contractor shall install the carrier pipe in full conformity with the Contract Documents. The pipe shall be installed to the lines and grades required within the casing pipe and placed to the acceptance of the City. The carrier pipe shall be braced to the side and the top of the casing pipe to prevent flotation or motion.

A bulkhead or rubber end seals shall be placed at each end of the casing pipe to keep the surrounding soil and material from migrating into the voids of the casing pipe.

14.12 TESTING

The pipe shall be tested as provided in the Contract Documents.

END OF SECTION

Docusign Envelope ID: AFCB16A4-B390-89EA-8013-04580053D90F

THIS PAGE INTENTIONALLY LEFT BLANK

Docusign Envelope ID: AFCB16A4-B390-89EA-8013-04580053D90F

SECTION 15 - FLUSHING, TESTING AND DISINFECTION

15.01 SCOPE OF WORK

A. Flushing, Pressure Testing, and Disinfection of systems including, but not limited to, the pipelines shown in the Contract Documents.

B. Contractor shall furnish all necessary pumps, hoses, piping, fittings, meters, gauges, chemicals and labor to conduct specified testing.

C. Testing shall be repeated at the Contractor's expense until satisfactory results are achieved.

15.02 REFERENCES

A. AWWA C651 - Standard for Disinfecting Water Mains.

B. UNI-B-6 - Recommended Practice for Low-Pressure Air Testing of Installed Sewer Pipe

C. ASTM F1417 - Standard Test Method for Installation Acceptance of Plastic Gravity Sewer Lines Using Low-Pressure Air

D. AWWA C600 – Standards for Installation of Ductile-Iron Water Mains and Their Appurtenances.

E. AWWA C605 - Standard for Underground Installation of Polyvinyl Chloride (PVC) Pressure Pipe and Fittings for Water.

F. ASTM 2164 - Standard Practice for Field Leak Testing of Polyethylene (PE) and Crosslinked Polyethylene (PEX) Pressure Piping Systems Using Hydrostatic Pressure

15.03 SUBMITTALS

A. Test Reports: Indicate results comparative to specified requirements. Submit two (2) copies of test results to Engineer in accordance with Submittal specifications.

B. Final approval of the bacterial samples shall be received from the Florida Department of Environmental Protection prior to the time that the system is placed into operation. Sampling procedures shall be done in accordance with FDEP requirements.

C. Bacteriological sampling locations shall meet FDEP requirements and be taken where shown on the drawings and as directed by the Engineer at no additional cost to Owner. Costs for all bacteriological testing shall be borne by the Contractor.

15.04 QUALITY ASSURANCE

A. Perform Work in accordance with these specifications, applicable utility provider standards, and the applicable reference standards listed in Section 1.03 above.

Docusign Envelope ID: AFCB16A4-B390-89EA-8013-04580053D90F

15.05 REGULATORY REQUIREMENTS

A. Conform to applicable FDEP requirements for performing the work of this Section.

15.06 DISINFECTION CHEMICALS

A. Chemicals: The disinfecting agent shall be sodium hypochlorite solution ANSI/AWWA B303 or liquid chlorine ANSI/AWWA B301. Dry hypochlorite, similar to "HTH" or equal may also be used as the disinfecting agent. Bleach or Clorox is not acceptable.

15.07 FLUSHING AND PRESSURE TESTING - PIPING

The Contractor shall furnish and install suitable temporary testing plugs or caps for the water lines, all necessary pressure pumps, hose, pipe connections, meters, gauges and other similar equipment, and all labor required, all without additional compensation for conducting pressure and leakage tests and flushing of the new water lines. Flushing and pressure testing shall be conducted in the following order:

A. After all piping lines have been installed and before pressure testing and final connections to equipment, each run of pipe shall be thoroughly flushed so as to remove all debris and foreign matter from the piping and equipment. Clean and flush all piping using potable water. Cleaning and Flushing shall be achieved by pigging with two (2) polyurethane foam pigs as manufactured by Girard Poly-Pig Inc. or "an approved equal". For watermain installation, the Contractor must ensure that there will be no contaminated water re-entering the main where the pig is flushed out, or it will be re-pigged at the Contractor's expense. Each pig will run through the line prior to running the second pig. On short runs (100 feet or less), or small lines (less than 4"), cleaning shall be accomplished by flushing with a minimum velocity of 2.5 feet per second. Contractor shall furnish and install required pig launch and exit assemblies. Non-abrasive pigs shall be employed. Flushed water may be discharged to the closest public catch basins and be coordinated with the City. Contractor to provide means of discharging water to catch basins at Contractor's expense.

B. Pressure and leakage tests shall be conducted in the presence of the Engineer, or his representative. All pressure mains, fittings, water services, and appurtenances shall undergo pressure and leakage tests. The Contractor will provide all necessary apparatus including a suitable pressure gage, pump, measuring device, piping connections and fittings and the necessary labor to conduct the test. Leakage is defined as the quantity of water added to the pipe being tested during the test period. The Contractor shall submit to the Engineer the testing pattern he proposes to follow prior to testing for the Engineer's approval. The Contractor shall not test more than 1,500 feet of pipe in a single test without approval from the Engineer.

C. In preparation for pressure testing the following parameters must be followed:

1. All air must be vented from the pipeline prior to pressurization. This may be accomplished with the use of the air relief valves or corporation stop valves, vent piping in the testing hardware or end caps, or any other method which adequately allows air to escape the pipeline at all high points. Venting may also be

Docusign Envelope ID: AFCB16A4-B390-89EA-8013-04580053D90F

accomplished by 'flushing' the pipeline in accordance with the parameters and procedures as described in AWWA C600/C605.

2. The pipeline must be fully restrained prior to pressurization. This includes complete installation of all mechanical restraints per the restraint manufacturer's guidelines, whether permanent or temporary to the final installation. This also includes the installation and curing of any and all required thrust blocking. All appurtenances included in the pressure test, including valves, blow-offs, and air-relief valves shall be checked for proper installation and restraint prior to beginning the test.
3. Temporary pipeline alignments that are being tested, such as those that are partially installed in their permanent location shall be configured to minimize the amount of potentially trapped air in the pipeline.

15.07.01 PRESSURE TESTING DUCTILE IRON AND PVC PIPING SYSTEMS:

1. The test pressure for piping constructed of ductile iron and PVC pipe shall be a minimum of 150 psi and this pressure shall be maintained for a period of not less than two hours. Tests shall be made between valves and as far as practicable and as approved by the Engineer. Potable water from the distribution system shall be used. Pressure shall not vary more than five (5) psi for piping during the test periods or as approved by the Engineer. Additionally, allowable leakage shall be computed on the basis of AWWA C-600, C-605 where practical.
2. All leaks evident at the surface shall be uncovered and repaired regardless of the total leakage as indicated by the test, and all pipes, valves and fittings and other materials found defective under the test shall be removed and replaced at the Contractor's expense. Tests shall be repeated until leakage has been reduced below the allowable amount.
3. Should, in the judgment of the Engineer, it not be practical to follow the foregoing procedures exactly for any reason, modifications in the procedure shall be made as approved by the Engineer and the City.

15.07.02 PRESSURE TESTING HDPE PIPING SYSTEMS:

1. The HDPE pipe installed by the directional drill method shall be pressure tested after the entire length is installed.

2. The test pressure for all piping systems shall be a minimum of 150 psi and this pressure shall be maintained for a period of two hours. Testing procedure shall be in accordance with ASTM F2164 and generally as follows.

    a. Take safety precautions as required and as specified in ASTM F2164.
    b. Completely fill pipe with clean water and remove all air from pipe to be tested.
    c. Allow water in pipe to equalize to a common temperature with surrounding ground/groundwater for 24 hours
    d. With air removed and temperature equalized, gradually bring pipe being tested to test pressure plus 10 psi. If test pressure cannot be achieved, discontinue testing and correct fault.

Docusign Envelope ID: AFCB16A4-B390-89EA-8013-04580053D90F

e. Add make-up liquid as required to maintain test pressure plus 10 psi over a 4 hour period.
f. Test Phase - Immediately following the end of the 4 hour period, reduce pressure by 10 psi and monitor pressure for 1 hour. Do not increase pressure or add make up water.
g. Pass/Fail Criteria - If no leakage is observed, and pressure during the test phase remains steady (within 5% of the test pressure) for the 1 hour test phase period, a passing test is indicated.
h. Retesting – If retesting is necessary, depressurize the test section in accordance with ASTM F2164 and correct any faults. Do not attempt to correct any faults while the system is under pressure.
i. Allow the test section to "relax" for at least 8 hours before re-pressurizing. After the relaxation period, repeat the initial expansion and test phases as described above.
j. All leaks shall be repaired regardless of the total leakage as indicated by the test, and all pipes, valves and fittings and other materials found defective under the test shall be removed and re placed at the Contractor's expense. Tests shall be repeated until leakage has been reduced below the allowable amount.
k. All visible leaks shall be repaired regardless of the total leakage as indicated by the test, and all pipes, valves and fittings and other materials found defective under the test shall be removed and replaced at the Contractor's expense. Tests shall be repeated until leakage has been reduced below the allowable amount.
l. Should, in the judgment of the Engineer, it not be practical to follow the foregoing procedures exactly for any reason, modifications in the procedure shall be made as approved by the Engineer. In any event, the Contractor shall be responsible for the ultimate tightness of the watermain within the preceding requirements.

15.07.03 PRESSURE TESTING FUSIBLE PVC SYSTEMS:

1. Fusible PVC pipe installed by the directional drill method shall be pressure tested after the entire length is installed.

2. The test pressure for the water piping constructed fusible PVC pipe shall be a minimum of 150 psi. This pressure shall be maintained for a period of not less than two hours. Tests shall be made between valves and as far as practicable and as approved by the Engineer. Potable water from the distribution system shall be used. Pressure shall not vary more than five (5) psi for piping during the test periods or as approved by the Engineer. Additionally, allowable leakage shall be computed on the basis of AWWA C-600, C-605 where practical.

3. All leaks evident at the surface shall be uncovered and repaired regardless of the total leakage as indicated by the test, and all pipes, valves and fittings and other materials found defective under the test shall be removed and replaced at the Contractor's expense. Tests shall be repeated until leakage has been reduced below the allowable amount.

Docusign Envelope ID: AFCB16A4-B390-89EA-8013-04580053D90F

4. Should, in the judgment of the Engineer, it not be practical to follow the foregoing procedures exactly for any reason, modifications in the procedure shall be made as approved by the Engineer and the City. In any event, the Contractor shall be responsible for the ultimate water tightness of the piping within the preceding requirements

15.07.04 LEAKAGE TESTING FOR NON-PRESSURE PIPING

A. Gravity sanitary sewers need to be tested for leakage.

B. Gravity sanitary sewer leakage testing may include appropriate water or low pressure air testing. The leakage outward or inward (exfiltration or infiltration) shall not exceed 25 gallons per inch of pipe diameter per mile per day for any section of the system. An exfiltration or infiltration test shall be performed with a minimum positive head of two feet. The air test, if used, shall be conducted in accordance with one of the following Standards:

1. ASTM F1417
2. UNI-B-6

C. The testing method selected shall properly consider the existing groundwater elevations during the test.

15.07.05 DEFLECTION TESTING FOR NON-PRESSURE PIPING

D. After completion of the backfill, the engineer or owner may require that a deflection test be performed.

E. Deflection tests should be conducted using a go/no-go mandrel. The mandrel's outside dimension shall be sized to permit no more than 7.5 percent deflection. The percent deflection shall be established from the base inside diameter of the pipe. If the internal beading of the fused joints for the pipe is not required to be removed, the mandrel shall account for this clearance as well. The mandrel shall be approved by the owner or engineer prior to use. Lines that permit safe entry may allow other deflection test options, such as direct measurements.

15.08 DISINFECTION FOR WATER MAIN INSTALLATION

A. The Contractor shall furnish and install suitable temporary connections to the piping, all necessary pressure pumps, hose, pipe connections, meters, gauges and other similar equipment, and all labor required, all without additional compensation for the disinfection of all required potable water piping systems. Disinfection shall be in accordance with the City. If no standards exist, disinfection shall be conducted on the following systems in the following manner:

1. All relocated and new potable water and private fire line piping.

B. Conform to AWWA Standards and as modified herein.

C. Maintain disinfectant for a minimum of 8 hours in such a manner that the entire system will be filled with water containing a minimum chlorine concentration of 50 ppm at any point.

Docusign Envelope ID: AFCB16A4-B390-89EA-8013-04580053D90F

D. After the disinfecting agents have been permitted to remain for the specified contact periods, the water lines, and valves shall be thoroughly flushed with water until the residual chlorine tests are less than 4 PPM in each instance. The determination of the amount of residual chlorine in the system shall be made at such points and in accord with standard tests by means of a standard orthotolodine test set.

E. Replace permanent system devices removed for disinfection.

15.09 BACTERIOLOGICAL SAMPLING FOR WATER MAIN INSTALLATION

A. It shall be the responsibility of the Contractor under this contract to perform the bacteriological testing required by the Florida Department of Environmental Protection and the City to obtain clearance of all piping. The Contractor shall be responsible to disinfect and repeat testing as needed until clearance is obtained for all required systems. The Contractor shall be responsible to pay for additional water needed if the bacteriological testing must be repeated.

B. The piping requires two (2) passing consecutive daily samples taken from the locations called out on the plans or as determined by the Engineer. The samples shall be taken concurrently at all the respective sample point locations.

C. Sampling must be coordinated with Engineer and other construction activities so as to minimize re-sampling.

D. Contractor shall submit schedule for bacteriological testing and pressure tests.

E. The Contractor shall incur all costs needed to provide bacteriological clearance of the piping systems.

F. If repeated tests of such samples show the presence of coliform organisms, the disinfection shall be repeated until tests indicate an absence of contamination.

15.10 QUALITY CONTROL

A. The laboratory and personnel collecting bacteriological samples shall be Florida State certified in accordance with FDEP requirements.

15.11 CONNECTIONS TO EXISTING MAINS

A. The Contractor shall make connections to existing mains as shown on the drawings only after the new mains have passed their pressure and leakage test and completed the disinfection and bacteriological clearance procedures as required.

END OF SECTION

Docusign Envelope ID: AFCB16A4-B390-89EA-8013-04580053D90F

SECTION 16 - SANITARY SEWER BYPASS PUMPING

16.01 SCOPE OF WORK

The Contractor shall furnish all labor, materials, equipment and incidentals required to maintain existing and anticipated flows within the affected portion of the collection system throughout the construction period.

16.02 PUBLIC IMPACTS

The contractor shall not create a public nuisance due to excessive noise or dust, nor impact the public with flooding of adjacent lands, discharge of raw sewage, or release of other potential hazards, nor shall he encroach on or limit access to adjacent lands. No extra charge may be made for increased costs to the contractor due to any of the above.

16.03 SUBMITTALS

The Contractor shall, within 30 days of the date of the Notice to Proceed, submit to the Project Manager a detailed Bypass Pumping Plan for each site by-pass pumping will be needed. The Bypass Pumping Plan shall address all measures and systems to prevent a sanitary sewer overflow (SSO) as defined by the EPA. The Plan shall include as a minimum:

A. Working drawings and sketches showing work location, pump location, piping layout & routing. Show all proposed encroachment and access impacts on adjacent properties or facilities.
B. Pump, control, alarm and pipe specifications or catalog cuts. Detailed sketch of controls and alarm system.
C. Power requirements and details on methods to provide by-pass power or fueling.
D. Calculation and determination of response times to prevent an SSO after a high-water alarm.
E. Procedures to be taken in case of power, pump, or piping failures; including contact names and numbers for emergency notifications.
F. Frequency and specific responsibility for monitoring pump operation, fuel levels, pump maintenance and entire length of piping.

16.04 EQUIPMENT

A. Pumps:

1. By-pass pumping system shall consist of at least a primary pump and a backup pump. Each pump shall have a minimum pumping capacity of 150% of the anticipated peak flows. When bypassing a pump station, 150% of the lift station capacity (G.P.M. & T.D.H) shall be provided.
2. Pumps shall be low noise or sound attenuated. The noise level at any operating condition, in any direction, shall not exceed 70dBA at a distance of twenty-three (23) feet (7 meters) from the pump and/or power source.

Docusign Envelope ID: AFCB16A4-B390-89EA-8013-04580053D90F

B. Controls:

The by-pass pump system shall be equipped with automatic controls and an alarm system. The automatic controls will automatically start the backup pump in the event of a high-water condition or failure of the primary pump. The alarm system will immediately notify the Contractor of a pump failure or high-water condition.

C. Pipe:

Pipe shall be of adequate size and capacity to match the pumps. Pipe type and materials will depend on the particulars of the site conditions and shall be detailed in the Bypass Pumping Plan. Contractor will provide all connections.

16.05 SITE CONDITIONS

Site conditions will vary by site. Contractor is responsible to determine and address requirements such as traffic control, excavation, connections & fittings, impacts on access to adjacent properties, routing and support of by-pass piping, etc., in the Bypass Pumping Plan.

16.06 ON-SITE MONITORING

A. The Contractor shall have personnel experienced with the pumps and controls on site within the calculated response time to prevent an SSO after a high-water alarm.

B. During by-pass operations, the Contractor shall have posted on site with the permit, a copy of the approved Plan and the name and 24-hour contact number of the primary response person, the job site superintendent, and the construction company owner.

16.07 OPERATIONS

A. The Contractor is responsible for securing and providing power, fuel, site security, traffic control and all other supplies, materials and permits required for the by-pass pumping.

B. Contractor shall demonstrate automatic pump switching and alarm system to the satisfaction of the City of St. Pete Beach, prior to beginning by-pass pumping.

Satisfactory demonstration shall be documented by the engineer's, PM's or the City's dated signature on the posted copy of the approved Bypass Pumping Plan.

Docusign Envelope ID: AFCB16A4-B390-89EA-8013-04580053D90F

16.08 DAMAGE RESTORATION & REMEDIATION

A. The Contractor shall be responsible for any pre-pump notifications, all restoration of pre-pump conditions and any damage caused by by-pass operations.

B. Should there be an SSO caused by or as a direct result of the by-pass pumping, the contractor is responsible for all immediate & long term response, notifications, clean up, mitigation, etc. Copies of all written response plans, notifications, documentation, mitigation plans, etc., shall be submitted to the City.

END OF SECTION

Docusign Envelope ID: AFCB16A4-B390-89EA-8013-04580053D90F

THIS PAGE INTENTIONALLY LEFT BLANK

Docusign Envelope ID: AFCB16A4-B390-89EA-8013-04580053D90F

SECTION 17 - VALVES AND APPURTENANCES

17.01 GENERAL

17.01.01 SCOPE OF WORK

The Contractor shall furnish all labor, materials, equipment and incidentals required and install complete and ready for operation all valves and appurtenances as shown on the Contract Drawings and as specified herein.

All valves and appurtenances shall be of the size shown on the Contract Drawings and, to the extent possible, all equipment of the same type on the Project shall be from one manufacturer.

All valves and appurtenances shall have the name of the manufacturer and the working pressure for which they are designed cast in raised letters upon some appropriate part of the body.

All valves shall have a factory applied, fusion bonded epoxy coating on interior and exterior unless noted otherwise in the Contract Drawings or the Specifications.

Any valve, unless otherwise specified, that is removed from the system shall become the property of the Contractor and he shall insure proper disposal.

The equipment shall include, but not be limited to, the following:

1. Gate valves (Sec. 17.03)
2. Pressure Sustaining and Check Valves (Sec. 17.04)
3. Ball Valves for PVC Pipe (Sec. 17.05)
4. Butterfly Valves (Sec. 17.06)
5. Plug Valves (Sec. 17.07)
6. Valve Actuators (Sec. 17.08)
7. Air Release Valves (Sec. 17.09)
8. Valves Boxes (Sec. 17.10)
9. Corporation Cocks (Sec. 17.11)
10. Flange Adapter Couplings (Sec. 17.12)
11. Flexible Couplings (Sec. 17.13)
12. Hose Bibs (Sec. 17.14)
13. Slow Closing Air and Vacuum Valves (Sec. 17.15)
14. Surge Anticipator Valve (Sec. 17.16)
15. Check Valves (Sec. 17.17)
16. Hydrants (Sec. 17.18)
17. Restraining Clamps (Sec. 17.19)
18. Tapping Sleeves and Tapping Valves (Sec. 17.20)
19. Single Acting Altitude Valves (Sec. 17.21)

17.01.02 DESCRIPTION OF SYSTEMS

All of the equipment and materials specified herein are intended to be standard for use in

Docusign Envelope ID: AFCB16A4-B390-89EA-8013-04580053D90F

controlling the flow of potable water, reclaim water, wastewater, etc., depending on the applications.

17.01.03 QUALIFICATIONS

All of the types of valves and appurtenances shall be products of well-established reputable firms who are fully experienced and qualified in the manufacture of the particular equipment to be furnished. The equipment shall be designed, constructed and installed in accordance with the best practices and methods and shall comply with these Specifications as applicable. Valves shall be as covered under mechanical devices in Section 8 of ANSI/NSF Standard 61.

17.01.04 SUBMITTALS

Submittals shall conform to the following:

A. Submit to the City within 30 days after execution of the contract a list of materials to be furnished, the names of the suppliers and the date of delivery of materials to the site.

B. Complete shop drawings of all valves and appurtenances shall be submitted to the City and Engineer for review and acceptance in accordance with the Specifications.

17.02 TOOLS

Special tools, if required for normal operation and maintenance shall be supplied with the equipment.

17.03 GATE VALVES

Gate Valves shall conform to the following:

A. All buried valves shall have cast or ductile iron three (3) piece valve bodies.

B. Where indicated on the Contract Drawings or necessary due to locations, size, or inaccessibility, chain wheel operators shall be furnished with the valves. Such operators shall be designed with adequate strength for the valves with which they are supplied and provide for easy operation of the valve. Chains for valve operators shall be galvanized.

C. Where required, gate valves shall be provided with a box cast in a concrete slab and a box cover. Length of box shall include slab thickness. Box cover opening shall be for valve stem and nut. Valve wrenches and extension stems shall be provided by the manufacturer to actuate the valves. The floor box and cover shall be equal to those manufactured by Rodney Hunt Machine Company, Orange, Massachusetts, Clow, DeZurik or approved equal.

D. Gate valves with 3inch-20inch diameters shall be resilient seated, manufactured to meet or exceed the requirements of AWWA C509 or C515 and UL/FM of latest revision and in accordance with the following specifications. Valves shall have an unobstructed waterway equal to or greater than the full nominal diameter of the valve.

Docusign Envelope ID: AFCB16A4-B390-89EA-8013-04580053D90F

E. Wrench nut shall be provided for operating the valve.

F. Valves shall be suitable for an operating pressure of 200 psi and shall be tested in accordance with AWWA C509 or C515. Mueller, Kennedy, M&H, and Clow are acceptable valves.

G. All bonnet bolts, nuts and studs shall be stainless steel.

17.04 PRESSURE SUSTAINING AND CHECK VALVE

Pressure sustaining and check valves shall conform to the following:

A. Pressure sustaining and check valve shall be pilot operated diaphragm actuated valve with cast iron body, bronze trim, and 125-pound flanged ends. The valve shall be hydraulically operated, diaphragm type globe valve. The main valve shall have a single removable seat and a resilient disc, of rectangular cross section, surrounded on three and a half sides. The stainless-steel stem shall be fully guided at both ends by a bearing in the valve cover, and an integral bearing in the valve seat. It shall be sleeved at both ends with delrin. No external packing glands are permitted and there shall be no pistons operating the main valve or any controls. The valve shall be equipped with isolation cocks to service the pilot system while permitting flow if necessary. Main valve and all pilot controls shall be manufactured in the United States of America. Valve shall be single chamber type, with seat cut to 5 degrees taper.

B. Valve shall maintain a minimum (adjustable) upstream pressure to a preset (adjustable) maximum. The pilot system shall consist of two direct acting, adjustable, spring loaded diaphragm valves.

C. Valve shall be cast iron (ASTM A48) with main valve trim of brass (QQB-B-626) and bronze (ASTM B61). The pilot control valves shall be cast brass (ASTM B62) with 303 stainless steel trim. All ferrous surfaces inside and outside shall have a 2-part epoxy coating. Valve shall be similar in all respects to CLA-VAL Company, Model 692G-01ABKG, as manufactured by CLA-VAL Company, Winter Park, Florida, or similar pressure sustaining and check valve as manufactured by Golden Alderson; or approved equal.

17.05 BALL VALVES FOR PVC PIPE

Ball valves shall conform to the following:

A. Ball valves for PVC pipe shall be of PVC Type 1 with union, socket, threaded or flanged ends as required. Ball valves shall be full port, full flow, all plastic construction, 150 psi rated with Teflon seat seals and T-handles. PVC ball valves shall be as manufactured by Celanese Piping Systems, Inc., Wallace and Tiernan, Inc., Plastiline, Inc., or approved equal.

B. All valves shall be mounted in such a position that valve position indicators are plainly visible when standing on the floor.

Docusign Envelope ID: AFCB16A4-B390-89EA-8013-04580053D90F

17.06 BUTTERFLY VALVES

Butterfly valves shall conform to the following:

A. Butterfly valves shall conform to the AWWA Standard Specifications for Rubber Seated Butterfly Valves, Designated C504, except as hereinafter specified. Valves, except as specified hereinafter, shall be Class 150A or B, except that valves furnished downstream of the high service pumps shall be Class 250 and equal to those manufactured by Henry Pratt Company, DeZurik, Mueller, or approved equal. M&H/Kennedy/Clow are not generally approved equals. Ductile iron conforming to ASTM A536, Grade 65-45-12 shall be provided for all Class 250 valves. All valves shall be leak tested at 200 psi.

B. The face-to-face dimensions of flanged end valves shall be in accordance with Table 1 of above mentioned AWWA Specification for short-body valve. Adequate two-way thrust bearings shall be provided. Flange drilling shall be in accordance with ANSI B16.1.

C. Valve seats shall be an EPDM elastomer. Valve seats 24 inches and larger shall be field adjustable and replaceable without dismounting operator disc or shaft and without removing the valve from the line. All retaining segments and adjusting devices shall be of corrosion resistant material with stainless Nylock screws and be capable of the 1/8-inch adjustment. Valves 20 inches and smaller shall have bonded or mechanically restrained seats as outlined in AWWA C 504. Where the EPDM seat is mounted on the valve body, the mating edge of the valve disc shall be 18-8 stainless steel or Nickel-Chrome, 80-20%. Where the EPDM seat is mounted on the valve disc, the valve body shall be fitted with an 18-8 stainless steel seat offset from the shaft, mechanically restrained and covering 360 degrees of the peripheral opening or seating surface.

D. The valve body shall be constructed of ductile iron or close grain cast iron per ASTM A126, Class B with integrally cast hubs for shaft bearing housings of the through boss-type. Butterfly valves of the "wafer" or "spool" type will not be accepted.

E. The valve shaft shall be turned, ground, and polished constructed of 18-8, ASTM A-276, Type 304 stainless steel and designed for both torsional and shearing stresses when the valve is operated under its greatest dynamic or seating torque. Shaft shall be of either a one-piece unit extending full size through the valve disc and valve bearing or it may be of a stub shaft design. Shaft bearings shall be Teflon or nylon, self-lubricated type.

F. All valves shall be subject to hydrostatic and leakage tests at the point of manufacture. The hydrostatic test for Class 250 valves shall be performed with an internal hydrostatic pressure equal to 500 psi applied to the inside of the valve body of each valve for a period of five minutes. During the hydrostatic test, there shall be no leakage through the metal, the end joints or the valve shaft seal. The leakage test for the Class 250 valves shall be performed at a differential pressure of 230 psi and against both sides of the valve. No adjustment of the valve disc shall be necessary after pressure test for normal operation of valve. The Class 150 valves shall be tested in conformance with AWWA C-504.

G. In general, the butterfly valve operators shall conform to the requirements of Section 3.8 of the AWWA Standard Specifications for Rubber Seated Butterfly Valves, Designation C504, insofar as

Docusign Envelope ID: AFCB16A4-B390-89EA-8013-04580053D90F

applicable, and as herein specified.

H. Gearing for the operators shall be totally enclosed in a gear case in accordance with paragraph 3.8.3 of the above mentioned AWWA Standard Specification.

I. Operators shall be capable of seating and unseating the disc against the full design pressure of velocity, as specified for each class, into a dry system downstream and shall transmit a minimum torque to the valve. Operators shall be rigidly attached to the valve body.

J. The manufacturer shall certify that the required tests on the various materials and on the completed valves have been satisfactory and that the valves conform with all requirements of this Specification and the AWWA standard.

K. Where indicated on the Contract Drawings, extension stems, floor stands, couplings, stem guides, and floor boxes as required shall be furnished and installed.

17.07 PLUG VALVES

Plug valves shall conform to the following:

A. All plug valves shall be eccentric plug valves capable of sustaining 150 psi in either direction without leaking.

Exception: Single direction plug valves may be used if it is clearly demonstrated they will never be required to resist pressure in both directions either in service or during pipe line testing.

B. Plug valves shall be tested in accordance with current AWWA Standard C-504-80 Section 5. Each valve shall be performance tested in accordance with paragraph 5.2 and shall be given a leakage test and hydrostatic test as described in paragraphs 5.3 and 5.4. Plug valves shall be Kennedy or Dezurik.

C. Plug valves shall be of the non-lubricated eccentric type with resilient faced plugs and shall be furnished with end connections as shown on the Contract Drawings. Flanged valves shall be faced and drilled to the ANSI 150 lb. standard. Mechanical joint ends shall be to the AWWA Standard C111-72. Bell ends shall be to the AWWA Standard C100-55 Class B. Screwed ends shall be to the NPT standard.

D. Plug valve bodies shall be of ASTM A126 Class B Semi-steel, 31,000 psi tensile strength minimum in compliance with AWWA Standard C507-73, Section 5.1 and AWWA Standard C504-70 Section 6.4. Port areas for valves 20-inches and smaller shall be full port 100 percent of full pipe area. Valves 24-inch and larger shall have a minimum port area between 80 and 100 percent of full nominal pipe area. All exposed nuts, bolts, springs, washers, etc. shall be zinc or cadmium plated. Resilient plug facings shall be of Hycar or Neoprene.

E. Plug valves shall be furnished with permanently lubricated stainless steel or oil-impregnated bronze upper and lower plug stem bushings. These bearings shall comply with current AWWA Standards.

Docusign Envelope ID: AFCB16A4-B390-89EA-8013-04580053D90F

17.08 VALVE ACTUATORS

17.08.01 GENERAL

A. All valve actuators shall conform to Section 3.8 of the AWWA Standard Specification and shall be either manual or motor operated.

B. Actuators shall be capable of seating and unseating the disc against the full design pressure and velocity, as specified for each class, into a dry system downstream, and shall transmit a minimum torque to the valve. Actuators shall be rigidly attached to the valve body.

C. Butterfly valve actuators shall conform to the requirements of Section 3.8 of the AWWA Standard specifications for Rubber Seated Butterfly Valves, Designated C504, insofar as applicable and as herein specified.

17.08.02 MANUAL ACTUATORS

A. Manual actuators shall have permanently lubricated, totally enclosed gearing with handwheel and gear ratio sized on the basis of actual line pressure and velocities. Actuators shall be equipped with handwheel, position indicator, and mechanical stop-limiting locking devices to prevent over travel of the disc in the open and closed positions. They shall turn counter-clockwise to open valves. Manual actuators shall be of the traveling nut, self-locking type and shall be designed to hold the valve in any intermediate position between fully open and fully closed without creeping or fluttering. Actuators shall be fully enclosed and designed to produce the specified torque with a maximum pull of 80 pounds on the handwheel or chainwheel. Actuator components shall withstand an input of 450 foot pounds for 30-inch and smaller and 300 foot pounds for larger than 30-inch size valves at extreme actuator positions without damage. Valves located above grade shall have handwheel and position indicator, and valves located below grade shall be equipped with a 2-inch square AWWA operating nut located at ground level and cast-iron extension type valve box. Valve actuators shall conform to AWWA C504, latest revision.

17.08.03 MOTOR ACTUATORS (MODULATING)

A. The motor actuated valve controller shall include the motor, actuator unit gearing, limit switch gearing, limit switches, position transmitter which shall transmit a 4-20 mA DC signal, control power transformer, electronic controller which will position the valve based on a remote 4-20 milliamp signal, torque switches, bored and key-wayed drive sleeve for non-rising stem valves, declutch lever and auxiliary handwheel as a self-contained unit.

B. The motor shall be specifically designed for valve actuator service using 480-volt, 60 Hertz, three phase power as shown, on the electrical drawings. The motor shall be sized to provide an output torque and shall be the totally enclosed, non-ventilated type. The power gearing shall consist of helical gears fabricated from heat treated alloy steel forming the first stage of reduction. The second reduction stage shall be a single stage worm gear. The worm shall be of alloy steel with carburized threads hardened and ground for high

Docusign Envelope ID: AFCB16A4-B390-89EA-8013-04580053D90F

efficiency. The worm gear shall be of high tensile strength bronze with hobbed teeth. All power gearing shall be grease lubricated. Ball or roller bearings shall be used throughout. Preference will be given to units having a minimum number of gears and moving parts. Spur gear reduction shall be provided as required.

C. Limit switches and gearing shall be an integral part of the valve control. The limit switch gearing shall be made of bronze and shall be grease lubricated, intermittent type and totally enclosed to prevent dirt and foreign matter from entering the gear train. Limit switches shall be of the adjustable type capable of being adjusted to trip at any point between fully opened valve and fully closed valve.

D. The speed of the actuator shall be the responsibility of the system supplier with regard to hydraulic requirements and response compatibility with other components within the control loop. Each valve controller shall be provided with a minimum of two rotor type gear limit switches, one for opening and one for closing. The rotor type gear limit switch shall have two normally open and two normally closed contacts per rotor. Gear limit switches must be geared to the driving mechanism and in step at all times whether in motor or manual operation. Provision shall be made for two additional rotors as described above, each to have two normally open and two normally closed contacts. Each valve controller shall be equipped with a double torque switch. The torque switch shall be adjustable and will be responsive to load encountered in either direction of travel. It shall operate during the complete cycle without auxiliary relays or devices to protect the valve, should excessive load be met by obstructions in either direction of travel. The torque switch shall be provided with double-pole contacts.

E. A permanently mounted handwheel shall be provided for manual operation. The handwheel shall not rotate during electric operations but must be responsive to manual operation at all times except when being electrically operated. The motor shall not rotate during hand operation nor shall a fused motor prevent manual operation. When in manual operating position, the unit will remain in this position until motor is energized at which time the valve operator will automatically return to electric operation and shall remain in motor position until handwheel operation is desired. This movement from motor operation to handwheel operation shall be accomplished by a positive declutching lever which will disengage the motor and motor gearing mechanically, but not electrically. Hand operation must be reasonably fast. It shall be impossible to place the unit in manual operation when the motor is running. The gear limit switches and torque switches shall be housed in a single easily accessible compartment integral with the power compartment of the valve control. All wiring shall be accessible through this compartment. Stepping motor drives will not be acceptable.

F. The motor with its control module must be capable of continuously modulating over its entire range without interruption by heat protection devices. The system, including the operator and control module must be able to function, without override protection of any kind, down to zero dead zone.

G. All units shall have strip heaters in both the motor and limit switch compartments.

Docusign Envelope ID: AFCB16A4-B390-89EA-8013-04580053D90F

H. The actuator shall be equipped with open-stop-close push buttons, an auto-manual selector switch, and indicating lights, all mounted on the actuator or on a separate locally mounted power control station.

I. The electronics for the electric operator shall be protected against temporary submergence.

J. Actuators shall be Limitorque L120 with Modutronic Control System containing a position transmitter with a 4-20MA output signal or equal.

17.08.04 MOTOR ACTUATORS (OPEN-CLOSE)

A. The electronic motor-driven valve actuator shall include the motor, actuator gearing, limit switch gearing, limit switches, torque switches, fully machined drive sleeve, declutch lever, and auxiliary handwheel as a self-contained unit.

B. The motor shall be specifically designed for valve actuator service and shall be of high torque totally enclosed, nonventilated construction, with motor leads brought into the limit switch compartment without having external piping or conduit box.

a) The motor shall be of sufficient size to open or close the valve against maximum differential pressure when voltage to motor terminals is 10% above or below nominal voltage.
b) The motor shall be prelubricated and all bearings shall be of the anti-friction type.

C. The power gearing shall consist of helical gears fabricated from heat treated steel and worm gearing. The worm shall be carburized and hardened alloy steel with the threads ground after heat treating. The worm gear shall be of alloy bronze accurately cut with a hobbing machine. All power gearing shall be grease lubricated. Ball or roller bearings shall be used throughout.

D. Limit switches and gearing shall be an integral part of the valve actuator. The switches shall be of the adjustable rotor type capable of being adjusted to trip at any point between fully opened valve and fully closed valve. Each valve controller shall be provided with a minimum of two rotor type gear limit switches, one for opening and one for closing (influent valves require additional contacts to allow stopping at an intermediate position). The rotor type gear limit switch shall have two normally open and two normally closed contacts per toro. Additional switches shall be provided if shown on the control and/or instrumentation diagrams. Limit switches shall be geared to the driving mechanism and in step at all times whether in motor or manual operation. Each valve actuator shall be equipped with a double torque switch. The torque switch shall be adjustable and will be responsive to load encountered in either direction of travel. It shall operate during the complete cycle without auxiliary relays or devices to protect the valve should excessive load be met by obstructions in either direction of travel. Travel and thrusts shall be independent of wear in valve disc or seat rings.

E. A permanently mounted handwheel shall be provided for manual operation. The

Docusign Envelope ID: AFCB16A4-B390-89EA-8013-04580053D90F

handwheel shall not rotate during electric operation except when being electrically operated. The motor shall not rotate during hand operation, nor shall a fused motor prevent manual operation. When in manual operating position, the unit will remain in this position until motor is energized at which time the valve actuator will automatically return to electric operation and shall remain in motor position until handwheel operation is desired. Movement from motor operation to handwheel operation shall be accomplished by a positive declutching lever which will disengage the motor and motor gearing mechanically, but not electrically. Hand operation must be reasonably fast. It shall be impossible to place the unit in manual operation when the motor is running.

F. Valve actuators shall be equipped with an integral reversing controller and three phase overload relays, Open-Stop-Close push buttons, local-remote-manual selector switch, control circuit transformer, three-phase thermal overload relays and two pilot lights in a NEMA 4X enclosure. In addition to the above, a close coupled air circuit breaker or disconnect switch shall be mounted and wired to the valve input power terminals for the purpose of disconnecting all underground phase conductors.

G. The valve actuator shall be capable of being controlled locally or remotely via a selector switch integral with the actuator. In addition, an auxiliary dry contact shall be provided for remote position feedback.

H. Valve A.C. motors shall be designed for operation on a 480 volt, 3-phase service. Valve control circuit shall operate from a fuse protected 120-volt power supply.

I. Motor operators shall be as manufactured by Limitorque Corporation, Type L120 or approved equal.

17.09 AIR RELEASE VALVES

The air release valves for use in water or force mains shall be installed as shown on the Contract Drawings. The valves shall have a 316 stainless steel body and cover, 316 stainless steel float, plug, seat ring, and internal mechanism, bronze water diffuser, Buna-N or Viton seat, and 316 stainless steel trim and hardware. The fittings shall be threaded. Back flushing attachments shall be included. The air release valves shall be Figure 942 or 942F as manufactured by VAG/GA Industries or approved equal.

17.10 VALVE BOXES

Valve Boxes shall conform to the following:

A. Buried valves shall have cast-iron three-piece valve boxes or HDPE adjustable valve boxes. Cast iron valve boxes shall be provided with suitable heavy bonnets and shall extend to such elevation at or slightly above the finished grade surface as directed by the City. The barrel shall be two-piece, screw type, having a 5 1/4-inch shaft. The upper section shall have a flange at the bottom with sufficient bearing area to prevent settling and shall be complete with cast iron covers. Covers shall have WATER, SEWER, or RECLAIM, as applicable, cast into the top. Lids will be painted “safety” blue for potable, purple for reclaimed, and green for sanitary sewer.

Docusign Envelope ID: AFCB16A4-B390-89EA-8013-04580053D90F

B. All valves shall have actuating nuts extended to within four (4) feet of the top of the valve box. All valve extensions will have a centering guide plate two (2) inches maximum below the actuating nut. The valve extension shall be fastened to the existing nut with a set screw. Valve boxes shall be provided with a concrete base and a valve nameplate engraved with lettering 1/8-inch deep as shown on the Contract Drawings.

C. HDPE adjustable valve boxes shall be one complete assembled unit composed of the valve box and extension stem. All moving parts of the extension stem shall be enclosed in a housing to prevent contact with the soil. Valve box assembly shall be adjustable to accommodate variable trench depths.

D. The entire assembly shall be made of heavy wall high density polyethylene. All exterior components shall be joined with stainless steel screws. The valve box top section shall be adaptable to fit inside a valve box upper section.

E. The stem assembly shall be of a telescoping design that allows for variable adjustment length. The stem material shall be of plated steel square tubing. The stem assembly shall have a built-in device that keeps the stem assembly from disengaging at its fully extended length. The extension stem must be torque tested to 1000 foot pounds. Covers shall have WATER, SEWER or RECLAIMED clearly and permanently impressed into the top surface.

17.11 CORPORATION COCKS

Corporation cocks for connections to cast-iron, ductile iron or steel piping shall be all brass or bronze suitable for 180 psi operating pressure and similar to Mueller Co. H-10046 or approved equal by Clow Corp. and shall be of sizes required and/or noted on the Contract Drawings.

17.12 FLANGE ADAPTER COUPLINGS

Flange adapter couplings shall be of the size and pressure rating required for each installation and shall be suitable for use on either cast iron or ductile iron pipe. They shall be similar or approved equal to Dresser Company, Style 128. All couplings shall have a sufficient number of factory installed anchor studs to meet or exceed a minimum test pressure rating of 230 psi minimum.

17.13 FLEXIBLE COUPLINGS

A. Flexible couplings shall be either the split type or the sleeve type as shown on the Contract Drawings.

B. Split type coupling shall be used with all interior piping and with exterior piping noted on the Contract Drawings. The couplings shall be mechanical type for radius groove piping. The couplings shall mechanically engage and lock grooved pipe ends in a positive couple and allow for angular deflection and contracting and expansion.

C. Couplings shall consist of malleable iron, ASTM Specification A47, Grade 32510 housing clamps in two or more parts, a single chlorinated butyl composition sealing gasket with a "C" shaped cross-section and internal sealing lips projecting diagonally inward, and two or more oval track head type

Docusign Envelope ID: AFCB16A4-B390-89EA-8013-04580053D90F

bolts with hexagonal heavy nuts conforming to ASTM Specification A 183 and A194 to assemble the housing clamps. Bolts and nuts shall be hot dipped galvanized after fabrication.

D. Victualic type couplings and fittings may be used in lieu of flanged joints. Pipes shall be radius grooved as specified for use with the Victaulic couplings. Flanged adapter connections at fittings, valves, and equipment shall be Victaulic Vic Flange Style 741, equal by Gustin-Bacon Group, Division of Certain-Teed Products, Kansas City, Kansas, or approved equal.

E. Sleeve type couplings shall be used with all buried piping. The couplings shall be of steel and shall be Dresser Style 38 or 40, as shown on the Contract Drawings, or equal. The coupling shall be provided with hot dipped galvanized steel bolts and nuts unless indicated otherwise.

F. All couplings shall be furnished with the pipe stop removed.

G. Couplings shall be provided with gaskets of a composition suitable for exposure to the liquid within the pipe.

H. If the Contractor decides to use victaulic couplings in lieu of flanged joints, he shall be responsible for supplying supports for the joints.

17.14 HOSE BIBS

Hose bibs shall be 3/4-inch or 1-inch brass, polished chromium plated brass, with vacuum breaker as noted on the Contract Drawings.

17.15 SLOW CLOSING AIR AND VACUUM VALVES

A. The Contractor shall furnish and install slow closing air and vacuum valves as shown on the Contract Drawings which shall have two (2) independent valves bolted together. The air and vacuum valve shall have all stainless-steel float, guided on both ends with stainless shafts. The air and vacuum valve seat shall be Buna-N to insure drop tight closure. The Buna-N seat shall be fastened to the cover stainless shoulder screws in a manner to prevent distortion of the seat. The float shall be guided at both ends with stainless steel bushings.

B. The valve cover shall have a male lip designed to fit into the body register for accurate alignment of the float into the Buna-N seat. The valve cover shall have 250-pound class flanged outlet connection.

C. The surge check valve shall be bolted to the inlet of the air and vacuum valve and consist of a body, seat, disc, and compression spring. A surge check unit shall operate on the interphase between the kinetic energy and relative velocity flows of air and water, so that after air passes through, and water rushes into the surge check, the disc starts to close, reducing the rate of flow of water into the air valve by means of throttling orifices in the disc to prevent water hammer in the air valves. The surge check orifices must be adjustable type for regulation in the field to suit operating conditions. Valve shall be rated for 250-pound class working pressure.

D. The complete slow closing air and vacuum valve with air release valve shall have been flow tested in the field, substantiated with test data to show reduction of surge pressure in the valve. Flow test data

Docusign Envelope ID: AFCB16A4-B390-89EA-8013-04580053D90F

shall be submitted with initial shop drawings for review and acceptance.

E. Valve exterior to be painted Red Oxide, Phenolic TT-P86, Primer or approved equal for high resistance to corrosion.

F. All materials of construction shall be certified in writing to conform to ASTM specifications as follows:

Air Valve Cover, Body, and Surge Check Body	Cast Iron	ASTM A48, Class 30
Float	Stainless Steel	ASTM A240
Surge Check Seat and Disc	Stainless Steel	ASTM A582
Air Valve Seat Spring	Buna-N Stainless Steel	T302

17.16 SURGE ANTICIPATOR VALVES

A. Surge anticipator valves shall be furnished for the pumping systems as shown on the Contract Drawings. The valve shall be hydraulically operated, pilot controlled, and diaphragm or piston actuated. The main valve shall be cast iron conforming to ASTM A48 with bronze trim conforming to ASTM B61 and flanged ends conforming to ANSI B161.1. The main valve shall be globe type with a single removable seat and a resilient disc.

B. The diaphragm actuated valve shall have a stainless-steel stem guided at both ends by a bearing in the valve cover and an integral bearing surface in the seat. No external packing glands shall be permitted. The valve shall be fully serviceable without removing it from the line. The pilot system shall be of noncorrosive construction and provided with isolation cocks.

C. The piston actuated valve shall operate on the differential piston principle. The valve piston shall be guided on its outside diameter. The valve shall be able to operate in any position and shall be fully serviceable without removing it from the line. The pilot system shall be provided with isolation cocks and be of noncorrosive materials of construction.

D. The valve shall be designed specifically to minimize the effects of water hammer, resulting from power failure at the pumping station, or from normal stopping and starting of pumping operators. The valve shall open hydraulically on a down surge, or low-pressure wave created when the pump stops, remain open during the low-pressure cycle in order to be open when the high-pressure wave returns. The high-pressure pilot shall be adjustable over a 20 to 200 psi range and the low-pressure pilot shall be adjustable over a 15 to 75 psi range. The valve shall be the 250 Class.

17.17 CHECK VALVES

A. Check valves for cast iron and ductile iron pipe lines shall be swing type and shall meet the material requirements of AWWA Specification C508. The valves shall be iron body, bronze mounted, single disc, 175 psi working water pressure and nonshock. Valves shall be as manufactured by Mueller, Clow, Kennedy, or M&H. Valves 8-inch and larger shall be air cushioned to reduce valve slam.

B. When there is no flow through the line, the disc shall hang lightly against its seat in practically a vertical position. When open, the disc shall swing clear of the waterway.

Docusign Envelope ID: AFCB16A4-B390-89EA-8013-04580053D90F

C. Check valves shall have bronze seat and body rings, extended bronze hinge pins and bronze nuts on the bolts of bolted covers. The interior and exterior of the valve body shall have a factory applied fusion bonded or 10 mil 2-part epoxy coating (Protecto 401 or approved equal).

D. Valves shall be so constructed that disc and body seat may easily be removed and replaced without removing the valve from the line. Valves shall be fitted with an extended hinge arm with outside lever and weight. Weights provided and approved by the City shall be installed.

17.18 HYDRANTS

Hydrants shall be AVK Series 2780 Barrel (nostalgic style with stainless steel bolts) American Darling B-84-B or Mueller Super Centurian 250, or approved equal and shall conform to the "Standard Specification for Fire Hydrants for Ordinary Water Works Service", AWWA C502, and UL/FM certified, and shall in addition meet the specific requirements and exceptions which follow:

1. Hydrants shall be according to manufacturer's standard pattern and of standard size and shall have one 4-1/2inch steamer nozzle and two 2-1/2 inch hose nozzles.
2. Hydrant inlet connections shall have mechanical joints for 6 inch ductile-iron pipe.
3. Hydrant valve opening shall have an area at least equal to that area of a 5-1/4 inch minimum diameter circle and be obstructed only by the valve rod. Each hydrant shall be able to deliver 500 gallons minimum through its two 2-1/2 inch hose nozzles when opened together with a loss of not more than 2 psi in the hydrants.
4. Each hydrant shall be designed for installation in a trench that will provide 5-ft. cover.
5. Hydrants shall be hydrostatically tested as specified in AWWA C502.
6. Hydrants shall be rated at 200 psi.
7. All nozzle threads shall be American National Standard.
8. Each nozzle cap shall be provided with a Buna N rubber washer.
9. Hydrants shall be so arranged that the direction of outlets may be turned 90 degrees without interference with the drip mechanism and without the mechanism obstructing the discharge from any outlet.
10. Hydrants must be capable of being extended without removing any operating parts.
11. Hydrants shall have bronze-to-bronze seatings as per AWWA C502-85.
12. Hydrant main valve closure shall be of the compression type opening against the pressure and closing with the pressure. The resilient seat material shall meet the requirements of AWWA C-509 and shall preferably be EPDM Elastomer.
13. Internal and below ground iron parts (bonnet, nozzle section and base) shall have a fusion bonded epoxy coating per AWWA C550. Aboveground external hydrant parts (cap, bonnet and nozzle section) shall be either epoxy coated together with a UV resistant polyester coating or have two shop coats of paint per AWWA C502. The lower stand pipe or barrel shall be protected with asphaltic coatings per AWWA C502.
14. Exterior nuts, bolts and washer shall be stainless steel. Bronze nuts may be used below grade.
15. All internal operating parts shall be removable without requiring excavation.

17.19 RESTRAINING CLAMPS

Restraining clamp assemblies as detailed in the Contract Drawings for use at hydrant connections to water mains, or at fittings where shown on the Contract Drawings, shall be as manufactured by American

Docusign Envelope ID: AFCB16A4-B390-89EA-8013-04580053D90F

Cast Iron Pipe, Star Pipe Products, U.S. Pipe; or approved equal.

17.20 TAPPING SLEEVES AND GATE VALVES

Tapping valves shall meet the requirement of AWWA C500. The valves shall be flanged, shall be mechanical joint outlet with non-rising stem, designed for vertical burial and shall open left or counterclockwise. Stuffing boxes shall be the "O-ring" type. Operating nut shall be AWWA Standard 2-inch square for valves 2-inch and up. The valves shall be provided with an overload seat to permit the use of full size cutters. Gaskets shall cover the entire area of flange surfaces and shall be supplied with EPDM wedges up to 30-inch diameter.

Tapping sleeves and saddles shall seal to the pipe by the use of a confined "O" ring gasket and shall be able to withstand a pressure test of 180 psi for one hour with no leakage in accordance with AWWA C110, latest edition. A stainless steel 3/4-inch NPT test plug shall be provided for pressure testing. All bolts joining the two halves shall be stainless steel and shall be included with the sleeve or saddle. Sleeves and saddles shall be protected from corrosion by being fusion applied epoxy coated or be made of 18-8 Type 304 stainless steel. Saddle straps shall be 18-8 Type 304 stainless steel.

17.21 SINGLE ACTING ALTITUDE VALVES

17.21.01 FUNCTION

A. The altitude control valve shall be of the single acting type, closing off tightly when the water reaches the maximum predetermined level in the tank to prevent overflow; and opening to permit replenishing of the tank supply when the water level drops approximately 6-inch to 12-inch below the maximum level.

B. A hand operated valve in the power water line to the top of the piston shall permit adjustment of the speed of valve closing. The tank water level control shall be by means of a diaphragm operated, spring loaded, three-way pilot which directs power water to or from the top of the main valve piston. The three-way pilot shall be of bronze construction. The diaphragm surface exposed to the tank head shall be not less than 57 sq. inches. It shall be possible to adjust the spring above the diaphragm for water level control approximately 20% above or below the factory setting.

17.21.02 DESCRIPTION

A. The main valve shall operate on the differential piston principle such that the area on the underside of the piston is no less than the pipe area on the upper surface of the piston is of a greater area than the underside of the piston.

B. The valve piston shall be guided on its outside diameter by long stroke stationary Vee ports which shall be downstream of the seating surface to minimize the consequences of throttling. Throttling shall be done by the valve Vee ports and not the valve seating surfaces.

C. The valve shall be capable of operating in any position and shall incorporate only one flanged cover at the valve top from which all internal parts shall be accessible. There shall be no

Docusign Envelope ID: AFCB16A4-B390-89EA-8013-04580053D90F

stems, stem guides, or spokes within the waterway. There shall be no springs to assist the valve operation.

17.21.03 CONSTRUCTION

A. The valve body shall be of cast iron ASTM A-126 with flanges conforming to the latest ANSI Standards. The valve shall be extra heavy construction throughout. The valve interior trim shall be bronze B-62 as well as the main valve operation.

B. The valve seals shall be easily renewable while no diaphragm shall be permitted within the main valve body.

C. All controls and piping shall be of non-corrosive construction.

D. A visual valve position indicator shall be provided for observing the valve piston position at any time.

17.21.04 FIGURE NUMBER

The valves shall be the 20-inch Globe type (Fig. 3200-D) as manufactured by GA Industries of Mars, Pennsylvania, or approved equal.

17.22 INSTALLATION

A. All valves and appurtenances shall be installed in the location shown, true to alignment and rigidly supported. Any damage occurring to the above items before they are installed shall be repaired to the satisfaction of the City.

B. After installation, all valves and appurtenances shall be tested at least two hours at the working pressure corresponding to the class of pipe, unless a different test pressure is specified. If any joint proves to be defective, it shall be repaired to the satisfaction of the City.

C. Install all floor boxes, brackets, extension rods, guides, the various types of operators and appurtenances as shown on the Contract Drawings that are in masonry floors or walls, and install concrete inserts for hangers and supports as soon as forms are erected and before concrete is poured. Before setting these items, the Contractor shall check all Contract Documents which have a direct bearing on their location and he shall be responsible for the proper location of these valves and appurtenances during the construction of the structures.

D. Pipe for use with flexible couplings shall have plain ends as specified in the respective pipe sections.

E. Flanged joints shall be made with high strength, low alloy Corten bolts, nuts and washers. Mechanical joints shall be made with mild corrosion resistant alloy steel bolts and nuts. All exposed bolts shall be painted the same color as the pipe. All buried bolts and nuts shall be heavily coated with two (2) coats of bituminous paint comparable to Inertol No. 66 Special Heavy.

F. Prior to assembly of split couplings, the grooves as well as other parts shall be thoroughly cleaned.

Docusign Envelope ID: AFCB16A4-B390-89EA-8013-04580053D90F

The ends of the pipes and outside of the gaskets shall be moderately coated with petroleum jelly, cup grease, soft soap or graphite paste, and the gasket shall be slipped over one pipe end. After the other pipe has been brought to the correct position, the gasket shall be centered properly over the pipe ends with the lips against the pipes. The housing sections then shall be placed. After the bolts have been inserted, the nuts shall be tightened until the housing sections are firmly in contact, metal-to-metal, without excessive bolt tension.

G. Prior to the installation of sleeve-type couplings, the pipe ends shall be cleaned thoroughly for a distance of 8-inch. Soapy water may be used as a gasket lubricant. A follower and gasket, in that order, shall be slipped over each pipe to a distance of 6-inches from the end.

H. Valve boxes with concrete bases shall be installed as shown on the Contract Drawings. Mechanical joints shall be made in the standard manner. Valve stems shall be vertical in all cases. Place cast iron box over each stem with base bearing on compacted fill and the top flush with final grade. Boxes shall have sufficient bracing to maintain alignment during backfilling. Knobs on cover shall be parallel to pipe. Remove any sand or undesirable fill from valve box.

17.23 HYDRANT INSTALLATION

A. Hydrants shall be set at the locations designated by the City and/or as shown on the Contract Drawings and shall be bedded on a firm foundation. A drainage pit on crushed stone as shown on the Contract Drawings shall be filled with gravel or crushed stone and satisfactorily compacted. During backfilling, additional gravel or crushed stone shall be brought up around and 6-inch over the drain port. Each hydrant shall be set in true vertical alignment and shall be properly braced. Concrete thrust blocks shall be placed between the back of the hydrant inlet and undisturbed soil at the end of the trench. Minimum bearing area shall be as shown on the Contract Drawings. Felt paper shall be placed around the hydrant elbow prior to placing concrete. CARE MUST BE TAKEN TO ENSURE THAT CONCRETE DOES NOT PLUG THE DRAIN PORTS. Concrete used for backing shall be as specified herein.

B. When installations are made under pressure, the flow of water through the existing main shall be maintained at all times. The diameter of the tap shall be a minimum of 2-inch less than the inside diameter of the branch line.

C. The entire operation shall be conducted by workmen thoroughly experienced in the installation of tapping sleeves and valves, and under the supervision of qualified personnel furnished by the manufacturer. The tapping machine shall be furnished by the Contractor if tap is larger than 12-inch in diameter.

D. The Contractor shall determine the locations of the existing main to be tapped to confirm the fact that the proposed position for the tapping sleeve will be satisfactory and no interference will be encountered such as the occurrence of existing utilities or of a joint or fitting at the location proposed for the connection. No tap will be made closer than 30-inch from a pipe joint.

E. Tapping valves shall be set in vertical position and be supplied with a 2-inch square operating nut for valves 2-inch and larger. The valve shall be provided with an oversized seat to permit the use of full sized cutters.

Docusign Envelope ID: AFCB16A4-B390-89EA-8013-04580053D90F

F. Tapping sleeves and valves with boxes shall be set vertically or horizontally as indicated on the Contract Drawings and shall be squarely centered on the main to be tapped. Adequate support shall be provided under the sleeve and valve during the tapping operation. Sleeves shall be no closer than 30-inch from water main joints. Thrust blocks shall be provided behind all tapping sleeves. Proper tamping of supporting earth around and under the valve and sleeve is mandatory. After completing the tap, the valve shall be flushed to ensure that the valve seat is clean.

17.24 SHOP PAINTING

Ferrous surfaces of valves and appurtenances shall receive a coating of rust-inhibitive primer. All pipe connection openings shall be capped to prevent the entry of foreign matter prior to installation.

17.25 FIELD PAINTING

All metal valves and appurtenances specified herein and exposed to view shall be painted according to the Specifications. All above ground potable water main valves shall be painted safety blue.

17.26 INSPECTION AND TESTING

Completed pipe shall be subjected to hydrostatic pressure test for two hours at 180 psi. All leaks shall be repaired and lines retested as approved by the City. Prior to testing, the pipelines shall be supported in an approved manner to prevent movement during tests.

END OF SECTION

Docusign Envelope ID: AFCB16A4-B390-89EA-8013-04580053D90F

THIS PAGE INTENTIONALLY LEFT BLANK

Docusign Envelope ID: AFCB16A4-B390-89EA-8013-04580053D90F

SECTION 18 - SANITARY SEWER CONSTRUCTION

18.01 GENERAL

The Work in this section includes construction of sanitary sewer gravity pipes, force mains, manholes, and appurtenances.

Sanitary Sewers are to be constructed at locations indicated on the Contract Drawings. The City reserves the right, however, to make minor changes in grade and/or alignment as the Work progresses.

All Work shall be fully completed within the established limits as outlined for the various Pay Items listed in the Proposal. It is not the intent of the City to allow additional compensation for obstructions, interferences, or similar contingencies on this Project.

Pipe materials used for gravity sewers shall be subject to the depth limitations indicated in accordance with the Contract Documents.

All force main pipe and fittings shall be furnished and installed in accordance with the applicable requirements of the Technical Specifications sections headed “Piping Materials: Ductile Iron Pipe,” “Piping Materials: PVC Pressure Pipe,” and "Pressure Pipe Construction."

At the ends of the sections where adjoining pipelines have not been completed and are not ready to connect, temporary bulkheads or plugs (as specified herein) approved by the Engineer shall be installed. All such bulkheads or plugs shall be removed when they are no longer needed or when ordered by the Engineer.

All pipelines shall be tested and closed-circuit television video (CCTV) inspected. Any leak or defect shall be repaired and re-televised. Tests shall be conducted in accordance with these Specifications.

PVC pipe for gravity sewers shall be tested for allowable deflection. Tests shall be conducted in accordance with the requirements of these Specifications.

Connections between dissimilar gravity pipe materials or diameters shall be made as specified herein.

Connections between pressure pipes shall be made with solid sleeves as specified herein.

The ends of all new sanitary laterals shall be marked by witness posts or protruding galvanized pipe, as directed by the Engineer. Witness posts shall be 4-inch diameter PVC pipe filled with concrete; 4 to 5 feet of the pipe shall be exposed and wrapped with green tape. The 1-inch diameter galvanized pipe shall protrude 1 inch above grade.

The following Standards are referenced in this section:

ASTM C 12	“Practice for Installing Vitrified Clay Pipe Lines”
ASTM C 76	"Standard Specification for Reinforced Concrete Culvert, Storm Drain, and

Docusign Envelope ID: AFCB16A4-B390-89EA-8013-04580053D90F

	Sewer Pipe"
ASTM C 443	"Standard Specification for Joints for Circular Concrete Sewer and Culvert Pipe, Using Rubber Gaskets"
ASTM C 478	"Standard Specification for Precast Reinforced Concrete Manhole Sections"
ASTM C 1107	"Standard Specification for Packaged Dry, Hydraulic-Cement Grout (NonShrink)"
ASTM D 2321	"Standard Practice for Underground Installation of Thermoplastic Pipe for Sewers and Other Gravity-Flow Applications"
ASTM D 3034	"Standard Specification for Type PSM Poly (Vinyl Chloride) (PVC) Sewer Pipe and Fittings"
ASTM D 3753	"Standard Specification for Glass-Fiber-Reinforced Polyester Manholes"
ASTM F 477	"Standard Specification for Elastomeric Seals (Gaskets) for Joining Plastic Pipe"
ASTM F 679	"Standard Specification for Poly (Vinyl Chloride) (PVC) Large-Diameter Plastic Gravity Sewer Pipe and Fittings"
UNI-B-6-98	"Recommended Practice for Low-Pressure Air Testing of Installed Sewer Pipe" Uni-Bell Plastic Pipe Association, Dallas, Texas

18.02 DATA TO BE SUBMITTED

The Contractor shall submit shop drawings in accordance with the General Conditions, Article 36, for the following materials:

Piping materials
Fittings and couplings
Grouting rings
Pipe-to-manhole connectors
Precast manholes
Fiberglass manholes
Castings
Wall sleeves
Special construction methods
Interior cementitious coating (including applicator's certification from manufacturer)

18.03 MATERIALS

All materials shall be furnished by the Contractor, unless otherwise noted on the Contract Drawings. All materials shall be new and of the best quality available. Materials not specifically specified shall confirm to applicable provisions of the FDOT-SSRBC.

18.03.01 Piping Materials

Sanitary sewer pipe shall either be green in color or shall be white with continuous colored green ink lettering or shall be continuously painted green along the top 1/3 of the pipe with 2-part high-build epoxy-polyamide paint. All sanitary sewers shall be installed accompanied by green-colored metallic identification tape laid 1 foot above the pipe, cut every 10 feet.

Docusign Envelope ID: AFCB16A4-B390-89EA-8013-04580053D90F

A. Ductile iron pipe and fittings for force mains or gravity sewers shall conform to the Technical Specifications section headed "Piping Materials: Ductile Iron Pipe."

B. PVC gravity sewer pipe and fittings 4-inch through 15-inch, intended for non-pressure service, shall comply with ASTM D 3034, Type PSM, with a dimension ratio of 35 and a minimum stiffness of 46 psi; or, at the direction of the Engineer, pipe with a dimension ratio of 26 and a minimum pipe stiffness of 115 psi shall be used. Joints and gaskets shall comply with ASTM F 477. PVC fittings for use on 4-inch through 15-inch PVC pipe shall be Harco Gasketed PVC Sewer Fittings as manufactured by Harrington Corp. or approved equal.

   PVC gravity sewer pipe and fittings 18-inch through 27-inch, intended for non-pressure service, shall comply with ASTM F 679, with T-1 wall thickness and a minimum pipe stiffness of 46 psi. Joints and gaskets shall comply with ASTM F 477.

C. PVC pressure pipe and fittings for force mains or gravity sewers shall conform to the Technical Specifications section headed "Piping Materials: PVC Pressure Pipe." Fittings shall be PVC or ductile iron as specified, as directed by the Engineer.

D. High Density Polyethylene (HDPE) pressure pipe for force mains shall conform to the Technical Specifications section headed “Piping Materials: HDPE Pressure Pipe.”

18.03.02 Other Materials

A. Castings for manholes and cleanouts shall be cast iron of the sizes, shapes, and catalog references shown on the Contract Drawings. Where no reference is made on the Contract Drawings, castings shall be equivalent in quality to those manufactured by U.S. Foundry. Unless otherwise noted, all castings shall be designed for an HS-20 truck loading. Castings shall be marked "Sanitary Sewer."

B. Concrete, reinforcing, and masonry for precast, cast-in-place, or site assembled manholes and structures shall conform to the Technical Specifications section headed "Concrete, Masonry, and Reinforcing Steel."

C. Precast manholes shall be manufactured as specified herein and in accordance with the sizes and details shown on the Contract Drawings, and with the approved shop drawings.

D. Fiberglass Reinforced Polyester (FRP) manholes shall be manufactured in accordance with ASTM D 3753, the sizes and details shown on the Contract Drawings, and the approved shop drawings.

18.04 CONNECTIONS TO EXISTING SANITARY SEWERS

The Contractor shall connect new sanitary sewers to existing sanitary sewers as shown on the Contract Drawings and as specified.

All connections to existing sanitary sewers shall be by Flex-Seal Adjustable Repair Coupling Series MR-ARC with Series 316 stainless steel shear rings as manufactured by Mission Rubber Company

Docusign Envelope ID: AFCB16A4-B390-89EA-8013-04580053D90F

or approved equal. All couplings shall be centered between pipe ends and shall be tightened at both ends by Series 316 stainless steel clamps or approved equal.

The Engineer shall be notified at least 2 working days prior to making final connections. The time at which the connections are to be made shall be subject to acceptance by the Engineer.

18.05 CONSTRUCTION OPERATIONS

Pipes shall be laid in open cut, except when another method, such as jacking, augering, directional drilling, or tunneling, is shown on the Contract Drawings, specified, or ordered. Construction shall adhere to the following:

A. No excavations shall be left open over a weekend. All pavement openings shall be completely repaired within 7 days of opening.

B. Sanitary sewers may be constructed in short tunnels to protect trees, shrubs, and existing surface or subsurface utilities and structures. Short tunnels shall be constructed to the lengths shown on the Contract Drawings, specified, or directed by the Engineer. No separate payment will be made for short tunnels.

C. Temporary fences, where required, shall be "wood and wire fence" or other suitable fencing as approved by the Engineer.

D. During the Work, it will be necessary to install the sanitary sewer under or closely adjacent to existing culverts and other storm and water main facilities. Where so indicated on the Contract Drawings, the Contractor shall remove storm drains to permit construction of the sanitary sewer and shall then reconstruct the storm drain. Where removal and reconstruction are not indicated on the Contract Drawings, the Contractor shall protect all existing storm and water main facilities which are shown on the Contract Drawings or located in the field during the Work.

E. Sewers crossing water mains may be required to be constructed of ductile iron pipe, PVC pressure pipe, or heavy wall PVC pipe (SDR 26) as ordered by the Engineer, to conform to DEP and Pinellas County Public Health Unit requirements.

   Sanitary sewers and service laterals which cross under the new water pipe with less than 18 inches clear vertical separation, or which cross over the new water pipe, shall be replaced with ductile iron pipe or PVC pressure pipe, or heavy wall PVC pipe (SDR 26) for 10 feet on both sides of the new water main, or as directed by the Engineer.

F. All ground surfaces disturbed by the Contractor shall be restored to their original condition in conformance to the Technical Specifications section headed "Surface Restoration."

G. Sanitary sewers shall not be cut or pumped around without an approved sanitary sewer pump-around plan and submittal of same, a minimum of 72 hours prior to implementation, to the Water Resources Department Dispatch, 893-7261. The pump-around plan shall include size of pipes and pumps, and discharge location.

Docusign Envelope ID: AFCB16A4-B390-89EA-8013-04580053D90F

H. It is the responsibility of the Contractor to maintain operation of the existing sewerage facilities during construction and repair work. The Contractor shall be responsible for providing any equipment required to maintain operation of service during construction. Any damage done to any existing sewer pipe or structure is to be immediately repaired to a condition equal to, or better than, its original condition.

I. Cutting ductile iron pipe shall be field cut with a power saw. No impact cutting is permitted. The spigot end of pipe thus cut shall be filed or ground to form a bevel.

J. Cutting PVC sewer pipe may be field cut using hand or power saws in accordance with the manufacturer's recommendations. The raw spigot end thus formed shall be filed to remove gasket damaging burrs and to form a standard bevel.

18.06 MANHOLE CONSTRUCTION

18.06.01 Precast Concrete Manholes

Precast manholes shall be constructed in accordance with the details shown on the Plans. Full shop drawing information including design, materials, fabrication details, and installation methods of the proposed precast manholes shall be submitted to the Engineer as specified.

A. Base slabs for precast manholes 48-inch in diameter shall have a minimum thickness of 8 inches as detailed on the Plans. The diameter of the base slab shall be as detailed on the Plans. Reinforcement shall be placed with 2 inches of concrete cover over the top row of steel. Base slabs for precast manholes shall be cast with the lower manhole section and placed on a level, compacted trench bottom.

B. Riser sections, grade rings, and tops shall comply with ASTM C 478 with the exception that Article No. 11 shall be deleted. Base riser sections shall be provided with preformed pipe holes to fit the connectors. The tops of pipe holes shall not be within 4 inches of the bell or socket portion of the riser.

C. Riser joints shall conform to ASTM C 443, to the manufacturer's recommendations and as shown on the Plans. Riser shall be jointed with rubber, plastic, or preformed bituminous joint sealing compound equal to Ram-Nek as manufactured by K.T. Snyder.

D. Manhole sizes up to 10 feet in depth (invert to bottom of brick adjustment ring) shall be a minimum of 48-inch inside diameter for 18-inch diameter and smaller pipe. Manholes over 10 feet in depth shall be the specified diameter for a minimum of 6 feet above the manhole invert; the remaining portion may, at the Contractor's option, be reduced to 48-inch diameter. In no case shall the manhole diameter be less than that required to adequately enclose the sewer pipe.

E. Tops shall have a minimum opening 24 inches in diameter for pipes 18-inch and smaller and 32-inch minimum for pipes 21-inch and larger, with an 8-inch wide flange at the top. For Type I manholes, only concentric cones are acceptable.

Docusign Envelope ID: AFCB16A4-B390-89EA-8013-04580053D90F

F. Top grades of precast manholes shall be established so that a minimum of 3, but no more than 6, courses of brick are placed under the ring and cover casting.

G. Inverts shall be formed using poured-in-place concrete conforming to the Technical Specifications section headed "Concrete, Masonry and Reinforcing Steel" and shall have a minimum strength of 2500 psi.

H. Drop inlets shall be provided where directed by the Engineer or shown on the Plans, and such drop inlets shall conform to details shown on the Plans.

I. A protective coal tar epoxy coating of Carboline (formerly Kop-Coat) Bitumastic 300-M, or approved equal, shall be applied to the exterior surfaces of manholes. One coat shall be applied to the outside and shall yield a final dry film thickness of 9 mils.

J. A dense and durable concrete lining of 100 percent pure fused calcium-aluminate cementitious lining of SewperCoat PG as manufactured by Kerneos Inc., shall be applied in accordance with manufacturer's recommendations, to all interior surfaces of manholes including walls, benches, flow channels, and inverts. Lining shall have a final minimum thickness of 1/2 inch.

K. Manhole wall penetrations for precast manholes shall be as specified for brick manholes.

L. Pipe-to-manhole connections (for New Precast) shall be made with a flexible watertight connector such as Kwik Seal or PSX: Positive Seal as manufactured by Press-Seal Gasket Corporation, or Kor-N-Seal connectors for pipe sizes up to 15-inch and Kor-N-Seal II connectors for pipe sizes 15-inch through 30-inch as manufactured by NPC Inc. Pipe-to-manhole connection shall be installed by the precaster for new manholes, unless specified otherwise.

18.06.02 Fiberglass Reinforced Polyester (FRP) Manholes

The construction of FRP manholes shall conform to the details on the Plans. Full shop drawing information including design, materials, fabrication details, and installation methods of the proposed fiberglass manholes shall be submitted to the Engineer as specified.

A. FRP manholes shall be a one-piece unit consisting of a watertight base and corbel section with a concentric cone, as manufactured by LF Manufacturing, Containment Solutions, or an approved equal.

B. A minimum wall thickness of 0.318 inch shall be used for 48-inch diameter manholes. A minimum wall thickness of 0.50 inch shall be used for manholes larger than 48-inch diameter. All manholes shall have a U/V inhibitor that is homogeneous with the resin mixture.

C. All FRP manholes shall have a minimum 20-year manufacturer’s warranty against corrosion and structural defects. All FRP manholes shall have a minimum AASHTO HS-20 axle loading.

Docusign Envelope ID: AFCB16A4-B390-89EA-8013-04580053D90F

D. Base Slabs: FRP manhole base slabs shall be precast or cast-in-place concrete and shall conform to the thickness specified in the details on the Plans. Cast-in-place concrete base slab reinforcement shall be placed with 3 inches of concrete cover in accordance with Technical Specifications Section 5 headed "Concrete, Masonry, and Reinforcing Steel" Cast-in-place base slabs for FRP manholes shall be cast in place on a level, compacted bottom.

E. Watertight Bottom: The FRP manhole shall have a resin 'fiber-reinforced bottom and a 2 and 1/2-inch-wide anti-floatation flange as a homogeneous part of the bottom section. The manhole bottom shall be a minimum 1/2-inch thick.

F. For FRP manhole depths greater than 10 feet, the manufacturer shall install a minimum of two 1 and 1/2-inch-deep by 3 and 1/2-inch-wide stiffening ribs. Stiffening ribs shall be completely enclosed with resin fiber-reinforcement.

G. FRP manholes shall be anchored to the cast-in-place concrete base slab with 316 stainless steel Kwik Bolt II Wedge anchors and washers as manufactured by Hilti, or approved equal. The size, number of anchors, and embedment depth shall be as shown on the Plans. The anchors shall be installed a minimum of 1 and 1/2 inches from the outer edge of the anchoring flange and shall be equally spaced around the circumference of the manhole bottom.

H. No fiberglass manhole shall have less than 4 feet clear inside height (measured from invert of bench to finished grade.)

I. Inverts shall be as shown on the Plans. A concrete invert may be formed in the field using poured-in-place concrete conforming to Technical Specifications Section 5 headed "Concrete, Masonry, and Reinforcing Steel" and shall have a minimum strength of 2,500 psi.

J. FRP stub outs shall be installed as shown on the Plans or directed by the Engineer, in accordance with approved shop drawings.

K. Pipe-to-manhole connectors for new manholes shall be installed by the FRP manhole manufacturer, unless specified otherwise. Connections for 4-inch through 15-inch pipe shall be made with a Kor-N-Seal boot as manufactured by NPC Inc., or approved equal, and laminated sleeve, as shown in the details on the Plans. Connections of 18-inch and larger shall be with a Link-Seal connector as manufactured by Pipeline Seal & Insulator Inc., or approved equal, and laminated sleeve as shown on the details on the Plans.

L. Laminated sleeves shall be formed using resin and fiberglass of same type and grade as used in the fabrication of the fiberglass manhole. Laminated sleeves may be factory installed or field installed. Field installation shall be by a manufacturer's certified representative or a Contractor-certified person.

M. All holes cut into the FRP manhole shall be by core methods recommended by the manhole manufacturer. A minimum of 12-inch clear wall between cutouts shall be maintained in all directions for each cored hole.

Docusign Envelope ID: AFCB16A4-B390-89EA-8013-04580053D90F

18.07 LAYING AND JOINTING PIPELINES

18.07.01 General

Ductile iron pipelines, PVC pressure pipelines, and HDPE pressure pipelines for force mains shall be laid and jointed as specified in the Technical Specifications section headed "Pressure Pipe Construction." Retainer glands used for PVC force mains shall be UL listed or FM approved and shall have factory certification for pressures up to 188 psi.

PVC, concrete, and FRPMP gravity pipelines shall be laid in conformance to applicable requirements of ASTM C 12 for concrete pipe, ASTM D 2321 for PVC pipe, and ASTM D 3262 and D 4161 for FRPMP.

18.07.02 Line and Grade

Sewers shall be laid to exact line and grade using approved methods consistent with common practice and approved by the Engineer. All line and grade controls shall be furnished by the Contractor. The line and the grade of the sewer, as well as the location of manholes, and all other appurtenances, shall be as shown on the Plans or, as directed by the Engineer. The grade line as given on the Plans indicates the grade of the invert of the sewer pipe. The trench bottom shall form a solid base for the entire length of pipe and shall be capable of supporting the full weight of the pipe and backfill material. The pipe bells shall not bear against the solid bottom of the ditch. Sewers will be inspected with mirrors at intervals during construction and corrected, if necessary, before backfill.

18.07.03 Pipe

Before the pipe is jointed in the trench, the outside of the spigot end and the inside of the bell shall be thoroughly cleaned, wiped, and brushed out to ensure that no dirt or foreign material gets into the finished line. Each pipe shall be inspected for defects and cracks prior to being lowered into the trench. Any cracked or otherwise rejected pipe shall be immediately removed from the site. All pipeline work must be performed in the presence of the Engineer. When work is not in progress, water shall be kept out of the pipe, and the pipe shall be kept closed by means of a test plug. The spigot end shall be centered on grade into the bell end of the last downstream length of pipe, and properly seated. When seating pipe with a pry, lever, or other approved device, care shall be taken to protect the pipe end from damage. Ends damaged in any manner shall be cause for rejection of the pipe.

18.07.04 Service Connections

Service lateral connections shall conform to the Details and shall be installed as indicated or as directed by the Engineer. The Contractor shall locate and record the exact position of such service lateral connections and include actual data on the As-Built Drawings to be furnished to the City.

In new sewer construction, D.I.P. and PVC service connections shall be made by means of a wye or tee. All joints connected to the wye unit shall remain flexible. Service connections on existing mains shall be made using a sewer saddle approved in the Contract Documents and

Docusign Envelope ID: AFCB16A4-B390-89EA-8013-04580053D90F

Technical Specifications. All new sewer service connections shall have a continuous looped trace wire consisting of one (1) 14-gauge minimum solid copper or one (1) 12- gauge copper clad steel tracer wires taped to the top center of the pipe from the cleanout to the main line and back to the cleanout.

Service pipe for all properties shall be laid to the property line and plugged, as shown on the Standard Details. All ends of service lines shall be marked by a permanent stake and where sidewalks or curbs are located nearby, by a chiseled mark cut in the sidewalk or curb. Service pipe shall have a protective cover of not less forty-two (42) inches under all roads and thirty-six (36) inches at all property lines. Inspection of service pipe shall be made before backfill. Service pipe shall have a visibly good line and grade. Shallow service shall be laid by using a four-foot hand level with proper shim attached to one end.
In cases of extra depth where service pipe cannot be laid on a continuous grade to the property line, the Contractor shall then furnish all materials and construct risers as shown on the Plans. When pipe cannot be adequately supported on undisturbed earth, it shall be supported on a concrete cradle. No payment will be made for concrete required to correct conditions resulting from faulty construction methods or negligence.

Service reconnections require adapters for all joints that will not connect properly with ordinary factory joints. Approved pipe cutting methods shall be used to cut any pipe required for the connection. All cut pipe will be ground and smoothed to remove snags and sharp edges. No mortar or collars shall be used on reconnections unless specifically approved by the Engineer.

18.07.05 Watertight Plugs

Watertight plugs of an approved type shall be installed in the ends of all pipe at times when pipe laying is not in progress or as ordered to prevent any contaminated material or vermin from entering the pipe. Pipelines shall be thoroughly flushed out upon their completion and when directed by the Engineer.

18.07.06 Removal of Existing Pipe

Existing pipe no longer in service that is removed from the system shall be disposed of properly by the Contractor. Openings in manholes, sewer lines, or wye branches remaining in place shall be properly plugged and sealed so as to eliminate any possibility of infiltration at the point of separation. All pieces of broken pipe shall be removed from the trench before backfill operations commence. Backfill of the trench shall be as specified in Technical Specifications Section 6- “Excavation and Backfill”. Inspection of structures remaining in place shall be made before backfill.

18.08 TESTING OF SEWER PIPELINES

18.08.01 Pressure Pipelines

Pressure sanitary sewer pipelines shall be tested in accordance with the applicable requirements of Technical Specifications Section 12 headed "Pressure Pipe Construction." Pressure sanitary sewer pipelines shall not be disinfected.

Docusign Envelope ID: AFCB16A4-B390-89EA-8013-04580053D90F

18.08.02 Gravity Pipelines

Gravity pipelines shall be tested for infiltration, exfiltration, deflection, or low pressure air test, at the Engineer's direction. The Contractor shall provide a closed-circuit television video camera inspection, in the presence of the City (or engineer) for all sanitary sewer pipe repairs and all new sanitary sewer construction. The video tape, CD, or DVD shall include time and date, footage, and audio describing any pipe abnormality; also, a CCTV inspection log shall be provided with each completed inspection. Any sewer pipeline found to be unacceptable by the Engineer shall be corrected, repaired, or replaced as directed by the Engineer, at no additional cost to the City.

1. **Infiltration Test**: Upon completion of a section of sewer line, a test for infiltration shall be conducted as directed by the City Inspector. Dewatering of the line to be tested shall terminate at least 2 days prior to the infiltration test. The maximum infiltration allowed in a 24-hour period shall not exceed 200 gallons per inch of diameter per mile of sewer from any section between successive manholes. If the infiltration exceeds the allowable limits, the line shall be further checked and repaired by the Contractor until the infiltration requirements have been met. If any location indicates concentrated infiltration, such location shall be investigated and corrected regardless of the overall infiltration requirement.

   Groundwater level measuring pipes shall be installed at manholes. The groundwater level shall be measured prior to testing. If the groundwater level is at least 2 feet above the highest section of the work being tested, infiltration methods of measurement shall be used. If there is insufficient groundwater head to perform infiltration testing, exfiltration tests will be made.

2. **Exfiltration Test**: If, in the opinion of the City Inspector, the position of a sewer line is above the normal groundwater table, the Engineer may direct the Contractor to perform an exfiltration test. The maximum allowable exfiltration during a 24-hour period shall not exceed 200 gallons per inch of diameter per mile of sewer from any section between successive manholes. An allowance of an additional 10 percent of gallonage shall be permitted for each additional 2 feet of head over a basic 2-foot minimum internal head.

   The exfiltration test shall be performed by plugging the upstream and downstream manholes of the test section, filling the line with water, and maintaining a minimum of 2 feet head of water in the section of line being tested. The rate of exfiltration shall be calculated from the water level drop in the upstream manhole during the 24-hour test period.

3. **Low pressure air test**: At the direction of the City Inspector or Engineer, each pipeline reach may alternatively be tested with air pressure (minimum 3.5 psi, maximum 5 psi) in accordance with UNI-BELL UNI-B-6-98 “Recommended Practice for Low-Pressure Air Testing of Installed Sewer Pipe.” The system passes the test if the pressure drop due to leakage through the pipe or pipe joints is less than or equal to 0.5 psig over the time period described below.

Docusign Envelope ID: AFCB16A4-B390-89EA-8013-04580053D90F

Minimum time period for a 0.5 psig pressure drop

The time period for the test shall be calculated from UNI-B-6-98 as follows:

T = 28.33 DK,
T = Shortest time, in seconds allowed for the air pressure to drop 0.5 psig,
K = .000419 DL, but not less than 1.0,
D = Nominal pipe diameter in inches, and
L = Length of pipe being tested in feet.

4. **Deflection Test**: Prior to final acceptance of the Project, all PVC pipelines shall be deflection tested. The Contractor or a City-approved test lab shall perform the deflection testing at the expense of the Contractor. The deflection test shall be performed a minimum of 7 days after the base has been compacted and sealed.

   The PVC pipe/soil system has been designed so that the maximum installed deflection does not exceed 5 percent and 7.5 percent of the base inside diameter of the pipe as listed in the following table:

Nominal Size (inches)	Base Inside Diameter (inches)	5% Deflection After 7 Days Mandrel (inches)	7.5% Deflection after 30 Days Mandre (inches)
ASTM D 3034 SDR-35			
8	7.665	7.28	7.09
10	9.563	9.08	8.85
12	11.361	10.79	10.51
15	13.898	13.20	12.86
ASTM F 679 TYPE T-1			
18	16.976	16.13	15.70
21	20.004	19.01	18.50
24	22.480	21.36	20.79
27	25.327	24.06	23.43
ASTM D 3034 SDR-26			
8	7.488	7.11	6.93
10	9.342	8.87	8.64
12	11.102	10.55	10.27
15	13.575	12.90	12.56
ASTM F 679 TYPE T-2			
18	17.054	16.20	15.77
21	20.098	19.09	18.59
24	22.586	21.46	20.89
27	25.446	24.17	23.54

Docusign Envelope ID: AFCB16A4-B390-89EA-8013-04580053D90F

The Contractor shall have the option of testing for 5 percent deflection after the base has been compacted and sealed for 7 days; or for 7 and 1/2 percent deflection after the base has been compacted and sealed for 30 days.

If the pipe fails the 7-day, 5 percent deflection test, the Contractor shall immediately conduct a 7 and 1/2 percent deflection test. If the pipe passes the 7 and 1/2 percent deflection test, the Contractor has the option of repairing that section at that time or waiting until a minimum of 30 days after the base has been compacted and sealed and then re-testing for a maximum of 7 and 1/2 percent deflection.

If the pipe fails the 7 and 1/2 percent deflection test after 7 days or at 30 days, the Contractor shall repair that section immediately.

If the Contractor performs the deflection testing rather than employing a City-approved test lab, the following shall apply:

The Contractor shall furnish the mandrel, labor, materials, and equipment necessary to perform the tests as approved by the Engineer. The mandrel shall be pulled through by hand or a hand operated reel in the presence of the Engineer. Prior to performing the deflection tests, the Contractor shall submit to the Engineer certification that the 9-arm mandrels are preset as stated above. Each mandrel shall be engraved with the following:

- Serial Number
- Nominal Pipe Diameter
- Either “ASTM D 3034,” year and either “SDR-35” or SDR-26” or “ASTM F 679,” year and either “Type T-1” or Type T-2”
- Percent deflection as stated above

If the mandrel fails to pass any section of pipe, the Contractor shall excavate and make all repairs (section replacements) necessary to correct the excessive deflection. The Contractor shall then backfill, recompact, reseal the permanent pavement base, and retest the line. If the mandrel fails to pass a second time, the affected section shall be replaced. Re-rounding shall not be permitted.

18.09 SANITARY SEWER PIPE REPAIRS

The contractor shall furnish all labor and materials to repair sanitary sewer pipelines as specified herein

18.09.01 General

A. The Contractor shall excavate and expose suspected damaged pipeline at general locations described by the County. The pipeline shall be exposed for visual inspection four feet on each side of the damaged area or as directed by the County. The City may authorize replacing bad joint materials (vitrified clay or concrete pipe) or removing and replacing the pipe.

Docusign Envelope ID: AFCB16A4-B390-89EA-8013-04580053D90F

B. Crushed stone shall be used in pipe bedding and to help stabilize trench bottoms. Special attention shall be given to compacting the bedding underneath the pipeline and its haunches.

C. Backfilling of repaired pipe shall proceed only in the presence of the Inspector.

18.09.02 Vitrified Clay Pipe Repairs

A. Repairs to VCP including cracked or crushed pipe, cracked bells, offset joints, holes, etc. shall be accomplished by replacing a section of damaged pipe with a piece of new C-900 PVC pipe. Such replacement shall be performed in accordance with the clay pipe manufacturer's recommendations. PVC repair sleeves shall be supplied by Contractor.

18.09.03 Iron Pipe Repairs

A. Repairs to iron pipe shall be accomplished by one of two methods
   1. Application of an appropriate repair sleeve
   2. When the damaged area is larger than recommended for repair sleeves, the damaged section will be cut out and replaced with a section of new ductile iron pipe or PVC, as specified by the Engineer.

B. The connections of new and old pipe shall be accomplished with two new ductile iron solid sleeves. All iron pipe repair work shall be performed in accordance with the manufacturer's recommendations. All repairs, including sleeves, shall be wrapped in polyethylene encasement.

18.09.04 Reinforced Concrete Pipe Repair

A. Reinforced concrete pipe repair shall be accomplished by the use of a reinforced concrete collar. Reinforcing shall be circumferential with a minimum cross-section area as specified in ASTM Des: C76 for Class V, R.C.P. of the same diameter as the damaged pipe. For damaged areas less than two feet in diameter, the collar may be the sole element of repair. A cutout of corrugated metal pipe shall be placed over the damaged area only to aid in the formation of the collar. The collar shall extend three hundred sixty (360) degrees around the pipe and two feet past the damaged area and corrugated metal in the longitudinal axis.

B. For larger repairs, the collar shall be used as a closure. The damaged pipe length shall be removed and become the property of the Contractor. The replacement length may be jointed with the existing pipe on one end only. The existing portion of the joint shall be thoroughly cleaned, and the rubber gasket replaced. After fully seating the joint, the other end shall receive a concrete collar closure extending two feet past the joint in the longitudinal direction. If the new and existing joints are not identical, the closure shall be used at both ends.

18.09.05 Polyvinyl Chlorine Pipe Repair

A. For non-pressure applications, existing and new pipe shall be jointed with flexible couplings with stainless steel straps as approved in these Technical Specifications. Only the flexible

Docusign Envelope ID: AFCB16A4-B390-89EA-8013-04580053D90F

coupling recommended by the manufacturer for the particular pipes to be jointed shall be used

B. For pressure pipe applications, repairs shall be made by one of the two methods as specified for iron pipe, except replacement pipe shall be PVC pressure pipe.

18.09.06 Final Acceptance

A. In the case of pressure pipe applications, after the pipe repair is complete and still exposed, the pipeline will be placed in service. Visual inspection, by the Engineer, of the repair while the pipeline is pressurized will provide tentative acceptance of the repair, provided no leaks are present. Repair of leaks or unsatisfactory work shall be performed at no cost to the City. Final acceptance will be granted after proper backfilling and surface restoration is accomplished.

B. In the case of non-pressure service, the Contractor shall backfill and have the line inspected by a City Inspector. The line shall be inspected by one of two methods: (1) inspection by mirrors and sunlight and/or (2) television inspection as directed by the Engineer.
   1. Upon submission of inspection video records via USB the City will review and verbally respond within one working day. If the repair is not satisfactory to the Engineer, the Contractor will, at no cost to the City, re-excavate, make repairs, television inspect and backfill.
   2. When the repair is satisfactory to the Engineer, the Contractor will be directed to complete surface restoration. Upon satisfactory completion of surface restoration, final acceptance will be granted.

END OF SECTION

Docusign Envelope ID: AFCB16A4-B390-89EA-8013-04580053D90F

SECTION 20 – WASTEWATER SYSTEM CCTV INSPECTION AND CLEANING

20.01 SCOPE OF SERVICES AND WORK PHASING FOR SYSTEM CCTV INSPECTION AND PIPE CLEANING

A. The purpose of this bid is to obtain competitive unit prices for all labor, material, and equipment necessary to inspect via closed-circuit television (CCTV) and clean existing sanitary sewers ranging in size from 6 to 24-inch diameter. The work includes hydraulic root cutting and cleaning, grinding protruding break-in service connections, remote televising and recording of the sewer location and condition. All project locations will be within the City's service area.

B. All City assets will be identified using the established facility identification code (FID) for all inspection reports, geographical exhibits, data sets and asset management tasks. Assets may include, but not be limited to, manholes, clean outs, gravity mains, force mains, air release valves, and conflict structures. Asset FIDs will be provided to the Contractor prior to the start of inspection. Failure to utilize the FID could result in additional inspection at the Contractors expense.

C. Compliance with this contract shall be complete when all conditions set forth in these specifications have been met. The work to be completed on each section of sewer will be performed as applicable and in phases as defined in the following:

20.01.01 PHASE 1: PRE-CLEANING INSPECTION

A. The preferred method for Pre-Cleaning Inspection is color CCTV conforming to NASSCO Pipeline Assessment Certification Program (PACP), and for the data to be exported electronically in a PACP certified format. The data must be shown in an Asset Management and Viewing Software that is accessible to the City of St. Pete Beach. Since this inspection is performed prior to cleaning, it is understood that the video may not provide an "unobstructed view of the entire pipe".

B. The Contractor may propose other methods to the City prior to bid for inspection such as, zoom camera inspection, digital sidewall scanning inspections, acoustical technology, etc.

C. If the Contractor is performing the Pre-Cleaning Inspection, the method must be pre-approved by the City prior to inspection of the sewer interior.

D. It is not the intent of this specification to require bypass pumping to control heavy flow; however, the Contractor must, at a minimum, make reasonable effort to control the flow by using flushing equipment. See this specification for sequencing of cleaning and inspection during heavy flow

Docusign Envelope ID: AFCB16A4-B390-89EA-8013-04580053D90F

scenarios. The Contractor must also consider weather conditions to obtain the best video image of the sewer. This may require the Contractor to delay any video work after major rain events until the system can return to lower dry weather flow.

E. Based on the quality of the results, the City can reserve the right to reduce the scope of the Phase 1 Pre-Cleaning Inspection.

20.01.02 PHASE 2: CLEANING DETERMINATION

Based on the City and Engineer's review, he or she will determine if cleaning or any additional work will be required. At the sole discretion of the City it is to either declare the work on the particular sewer segment complete or notify the Contractor of additional work (i.e. Phase 3: Light Sewer Cleaning, Heavy Cleaning, Deposit Cut, Root Cut Medium, Root Cut Ball, or Lateral Cut)

20.01.03 PHASE 3: SEWER PIPE CLEANING

The Contractor shall perform the assigned additional work, which may include, but is not limited to the following items as defined in these specifications: Light Cleaning, Heavy Cleaning, Root Cut Medium, Root Cut Ball, Deposit Cut, or Lateral Cut.

20.01.04 PHASE 4: POST CLEANING INSPECTION

Final televising of the sewer segments determined by the City include evaluating the condition of the sewer segments after all cleaning has been performed in Phase 3.

A. The recorded video must show the entire circumference of the sewer. Any flow control to remove standing water and debris shall be incidental to the contract. The Contractor shall submit PACP data to include the electronic video reports, logs, etc. for the City's review.

B. The data must be shown in an Asset Management and Viewing Software that is accessible to the City of St. Pete Beach. The Contractor shall provide up to three software licenenses to the City and the Engineer which shall include, but not be limited to, viewing, editing, and exporting capabilities of all inspection data.

C. The segments of sewer to be cleaned and televised through this contract will be located primarily within the paved areas of the public right-of-way; however, there may be some sewer segments that are located within public easements on private property. The successful bidder, with assistance of the City as required, will be responsible to coordinate and gain access to any and all sewer segments and will be responsible for any restoration in accordance with technical specification Section 07 "Surface Restoration". This will include written authorization between

Docusign Envelope ID: AFCB16A4-B390-89EA-8013-04580053D90F

Contractor and landowner. It is the City's right to omit segments that are adequately covered in the Pre-cleaning Inspection video.

20.02 COMPLIANCE AND ACCEPTANCE

Compliance with this contract shall be complete when all conditions set forth in these specifications have been met. The following defines each work item, the level of effort, and quality of work that will be necessary to meet the intent of this specification:

20.02.01 PRE-CLEANING INSPECTION

A. The preferred method for Pre-Cleaning Inspection is color CCTV conforming to National Association of Sewer Service Companies' (NASSCO) Pipeline Assessment Certification Program (PACP), exported electronically in a PACP compliant format. Other methods for inspection, including CCTV, zoom camera inspection, digital sidewall scanning inspections, acoustical technologies, etc. must be preapproved by the City prior to inspection of the sewer interior.

B. Should the level or type of debris differ from the original inspection, the work type can be adjusted by the City to the proper work type and the work shall be paid at the adjusted, proper rate. The Contractor shall be responsible for providing evidence of the change in conditions to the City.

20.02.02 LIGHT SEWER CLEANING (EACH SEGMENT)

A. The Contractor shall clean the sewer and associated manholes, including drop connections and benches, with hydro-jetting equipment. This will require an unlimited amount of passes and a minimum of two passes of high-velocity hydro-jetting equipment to remove all loose debris and collect it for removal in the downstream manhole. The first pass shall be restricted to 800 psi at the nozzle head, and the second and subsequent passes shall be at 1200 psi. All debris must be removed from the sewer, including any debris that may have been washed up into any service connections (does not include known pre-existing conditions in service connections), drop connections or the bench wall of the manholes. This item does not include any root cutting, deposit removal, or grinding of protruding service connections.

20.02.03 HEAVY SEWER CLEANING (EACH SEGMENT)

A. Pipes that cannot be cleaned by the methods described in the Light Sewer Cleaning sub-section shall be cleaned with rotating nozzle equipment. This also includes Deposits Attached Grease (DAGS) if able to remove with rotating nozzle or other mechanical means; not to

Docusign Envelope ID: AFCB16A4-B390-89EA-8013-04580053D90F

include saws or cutters. Compliance with this section requires substantial effort towards cleaning.

B. Under this bid item, the Contractor shall remove all obstructions in the sewer. All debris must be removed from the sewer, including any debris that may have been washed up into any service connections (does not include known pre-existing conditions in service connections), drop connections or the bench wall of the manholes. This includes all grease, rocks, debris, sticks, etc. that will reduce the hydraulic capacity of the sewer and limit future maintenance access of remote equipment. This work will include an unlimited number of passes by high velocity rotating nozzleequipment in conjunction with specialty cleaning equipment. All pipes shall be restored to at least 95 percent of their nominal diameter. Joint sealant shall be removed to within ¼ inch of the pipe wall. Removal of excessive joint sealant will generally not be required until just prior to lining of the pipe segment (if necessary), unless the joint sealant prevents the passage of the CCTV equipment. The Contractor shall be responsible for any damage to the sewer or any service connections. This item does not include cutting/grinding protruding break-in connections, as that work will be paid under a separate bid item.

C. The Contractor shall maintain detailed documentation of cleaning efforts made to remove these items. Such documentation shall be made available to the City at any time.

D. The Contractor shall immediately notify the City if he believes that this level of cleaning will cause a sewer collapse due to the existing deterioration of the host pipe. The City's determination whether to continue or stop work is final.

20.02.04 ROOT CUT (EACH SEGMENT)

A. Root Cut Medium - Removal of Roots Medium (RM), and Root Balls (RB) in one or two joints.

B. Root Cut Ball – Removal of Root Balls (RB) removed in at least 3 joints.

C. The City shall determine if the sewer segment requires root cut cleaning. All roots must be screened, collected, and removed from the sewer for proper disposal.

D. The Contractor shall immediately notify the City if he believes that these activities performed under this paragraph will cause a sewer collapse due to the existing deterioration of the host pipe. City's determination whether to continue or stop work is final.

Docusign Envelope ID: AFCB16A4-B390-89EA-8013-04580053D90F

20.02.05 DEPOSIT CUT (EACH SEGMENT)

A. Removal of Deposits Attached Encrustation (DAE) and Deposits Attached Grease (DAGS) that require a cutter to remove.

B. Under this bid item, the Contractor shall remove all obstructions in the sewer. All debris must be removed from the sewer, including any debris that may have been washed up into any service connections (does not include known pre-existing conditions in service connections), drop connections or the bench wall of the manholes. This includes all deposits, grease, debris, sticks, etc. that will reduce the hydraulic capacity of the sewer and limit future maintenance access of remote equipment. This work will include an adequate number of passes using high velocity hydro-cleaning equipment required to produce a clean pipe in accordance with these specifications. A mechanical/hydraulic root, chain cutter, etc. may be used where necessary at no additional cost to the City; however, the Contractor shall be responsible for any damage to the sewer or any service connections. This item does not include cutting/grinding protruding break-in connections, as that work will be paid under a separate bid item

C. Compliance with this section requires substantial effort towards cleaning, chipping, cutting, grinding, etc. to remove hardened deposits, grease, etc. The Contractor shall use remote CCTV equipment to monitor the progress of the work and ensure that the sewer is not damaged.

D. The Contractor shall immediately notify the City if they believe that activities performed under this paragraph will cause damage due to the existing deterioration of the host pipe. The City's determination whether to continue or stop work is final.

E. The Contractor shall maintain detailed documentation of cleaning efforts made to remove these items.

F. If attached deposits cannot be removed by tools normally used in the industry, the City should be consulted immediately. The City and the Contractor should discuss whether to cancel the work on that segmentation or negotiate a flat rate or hourly rate for the Contractor to do the work.

20.02.06 LATERAL CUT (EACH SEGMENT)

A. Removal of protruding laterals shall comply with Specification 36 and the requirements outlined below.

Docusign Envelope ID: AFCB16A4-B390-89EA-8013-04580053D90F

B. Removing protruding laterals, excludes DIP, SP, CAS etc.

C. The City shall determine when break-in service connections will require grinding based on his review of the initial survey television inspection. The Contractor shall cut/grind the protruding service connection by using a remote grinding/cutting device capable of removing, concrete, vitrified clay, PVC and other types of pipe material. The device shall be specifically designed to cut/grind protruding service connections. The Contractor shall use remote CCTV equipment to monitor the progress of the work and ensure that the service connection is not damaged.

D. The protruding break-in service connection shall be cut/ground flush to the main sewer pipe without scouring or damaging the main sewer or service connection. All cuttings must be screened, collected, and removed from the sewer for proper disposal.

E. During the final survey television inspection, the Contractor shall slowly pan the entire circumference of the trimmed connection to verify the quality of the work.

F. The Contractor shall immediately notify the City if he believes that the pipe is not structurally sound. The Contractor and City shall discuss the severity and risk of cutting/grinding the lateral. The City shall then determine, if they want the lateral cut/ground, at the City's risk, or if the work should not be performed on this contract.

G. If other than typical lateral materials are encountered, the Contractor shall notify the City and the City and Contractor should discuss the ability, costs and risks associated with cutting/grinding the lateral. The City shall decide whether to cut/grind the lateral or to not cut/grind the lateral. If the City decides to cut/grind the lateral, the price should be negotiated between the City and Contractor, prior to cutting/grinding the lateral.

20.02.07 DEBRIS RECORDS

The Contractor shall keep records of types of debris, removed from each segment of pipe and provide these records to City in the format requested by City.

20.02.08 FINAL SURVEY TELEVISION INSPECTION

As in the initial survey television inspection pay item, CCTV inspections will be conducted entirely in digital format.

All CCTV work shall conform to the most current NASSCO PACP standards. The documentation of the work shall consist of NASSCO PACP CCTV Reports, Unmodified NASSCO PACP database, logs, electronic reports, etc. noting defects and observations encountered during the inspection.

All City assets will be identified using the established facility identification code (FID) for all

Docusign Envelope ID: AFCB16A4-B390-89EA-8013-04580053D90F

inspection reports, geographical exhibits, data sets and asset management tasks. Assets may include, but not be limited to, manholes, clean outs, gravity mains, force mains, air release valves, and conflict structures. Asset FIDs will be provided to the Contractor prior to the start of inspection. Failure to utilize the FID could result in additional inspection at the Contractors expense.

Acceptance of pipe segment cleaning shall be made upon the successful review of the CCTV inspection by the Engineer. If the CCTV inspection shows the cleaning to be unsatisfactory, the Contractor shall be required to repeat the cleaning and CCTV inspection of the pipe segment until the cleaning is shown to be satisfactory. Such repeat cleaning and CCTV inspection shall be made at the Contractor's expense.

20.03 CLEANING EQUIPMENT

A. The wastewater system shall be cleaned with industry standard truck-mounted high velocity hydro-cleaning equipment. No mechanical bucket machinery will be acceptable for the cleaning process. The equipment shall be provided with a minimum of 500 ft of one-inch 10 high-pressure hose with a selection of high velocity nozzles, as required for the cleaning and heavy cleaning operations. The equipment shall have a minimum usable water capacity of 1000 gal. The pumps shall be capable of delivering a minimum 60 gpm at 3000 psi. Pressure to the nozzle shall be regulated by a relief valve, adjustable from a to 1,500 psi minimum. The nozzles shall produce a scouring action from 15 to 45 degrees in all size pipes to be cleaned. The equipment shall carry its own 1,000 gal water tank capable of holding corrosive or caustic cleaning or sanitizing chemicals, engines and pumps, and a hydraulically-driven hose reel. The equipment shall also include a high velocity washing hose for ancillary cleaning of the walls and floor of manholes. The hose shall have an adjustable nozzle capable of producing flow from a fine spray to a solid stream. All controls shall be located so that the equipment can be operated above ground. During hydro-cleaning, the Contractor shall restrict the flow level in the pipe to a maximum of 50 percent of the pipe diameter. Particular care should be taken to avoid flooding house connections during hydro-cleaning operations.

B. The Contractor shall provide equipment capable of removing all sand, dirt, rocks and other debris from the pipe segment to allow unobstructed remote CCTV inspection of all internal pipe surfaces.

C. The Contractor shall certify that backup cleaning equipment, including machines, devices, tools, etc, is available and can be delivered to the site within 24 hours.

D. Any blockages of building service connections resulting from the cleaning or other items of work shall be removed by cleaning of the building connection by the Contractor, at his own expense. Any damage caused by flooding of building service connections shall be corrected by the Contractor, at his own expense.

E. The Contractor shall provide specialty equipment capable of mechanically removing all attached,

Docusign Envelope ID: AFCB16A4-B390-89EA-8013-04580053D90F

hardened and/or cemented debris including, but not limited to, roots, grease, calcification, tuberculation, joint sealant, other hardened or tightly adherent deposits, etc. which cannot be removed by the use of industry standard high velocity hydro-cleaning equipment alone. Specialty equipment shall include, but is not limited to, a root saw, spring blade root cutter chuck or approved equal.

20.04 REFERENCED DOCUMENTS

A. All work must also conform to the latest edition of the following specifications:

1. State Department of Transportation, Construction and Materials Specification.
2. Rules and Regulations and Standard Drawings.
3. Rules and Regulations of the Office of the County/City Engineer.
4. If there is a difference in these specifications, the Rules and Regulations shall govern, DOT Specification.
5. NASSCO PACP Standards.
6. Other standards as appropriate.

B. Notification

1. If observed defects are believed to be such that further cleaning operations may compromise the structural integrity and/or cause the pipe to become unusable, the Contractor must provide written communication to the City's designee of the observed condition(s) and reason to believe that continued cleaning operations may cause substantial damage. The City will then direct the Contractor as to what services, precautions, etc., the City will require of the Contractor. If the contract documents do not address this potential, then the City and Contractor will negotiate in good faith, the conditions under which the work is to continue or cease to continue.

2. This exception may only be used to prevent asset damage and shall not be used to eliminate difficult or adverse cleaning areas that were previously documented in these documents or by prior written communication with the City.

20.05 GENERAL EXECUTION

A. The Contractor shall furnish and maintain, in good condition, all cleaning and televising equipment necessary for proper execution of the work.

B. Maintaining Flow: It will be the responsibility of the Contractor, throughout the tenure of this contract, to provide and maintain sufficient flow at all times to pass any flash of storm flow of drainage ditches and prevent any backwater flooding due to obstruction caused by cleaning or CCTV equipment.

C. Retrieval of Materials and Equipment: It shall be the Contractor's responsibility to remove

Docusign Envelope ID: AFCB16A4-B390-89EA-8013-04580053D90F

materials and equipment that has been lodged in the sewer from cleaning, television inspection, or point repair excavations.

D. After determining the preliminary requirements and the feasibility of effective CCTV inspection, the Contractor shall thoroughly clean all required pipe segments as required to permit an unrestricted inspection by industry standard CCTV inspection equipment. Particular emphasis shall be afforded the removal of accumulated grease, roots, sand, rocks, bricks, sludge and other debris so that the CCTV inspection will clearly show all portions of the pipe being inspected. Acceptance of pipe segment cleaning shall be made upon the successful completion of the CCTV inspection and shall be defined as removing sufficient material to permit an unrestricted view of the pipe internal surfaces and to ensure an effective rehabilitation of the pipe segment, all to the satisfaction of the Engineer.

E. Except during drought conditions, water required for the cleaning will be provided by the City or County at locations to be specified by the City. The City or County shall furnish and install water meters at all points where water is drawn from the City's supply. The City or County will charge a fee for the water used. A backflow prevention device shall be used to prevent contamination of the potable water system. The Contractor is responsible for any damage resulting from improper operation of hydrants. Do not use or obstruct a fire hydrant when there is a fire in the area.

F. The Contractor shall not waste water from the public water supply because of improper connections or from hydrants left open.

G. The Contractor shall remove all bricks, rocks, debris, sludge, dirt, sand, grease, roots and other materials from the pipe segment ordered to be cleaned and collect and remove the resulting debris from the downstream manhole of the pipe segment. Passing waste material between manholes, causing accumulations of sand, system stoppages, or damage to the pumping equipment shall not be permitted. When necessary, a dam trap or weir and screen shall be temporarily installed in the downstream manhole in such manner that debris and solids shall be trapped and retained for subsequent removal.

H. Waste and debris cleaned from the pipe segment shall be removed at the downstream manhole by pumps or other means. The discharge and drainage stream shall be returned downstream to the wastewater collection system for disposal. Under no circumstances shall wastewater or solids be dumped onto the ground surface, street, or into ditches, catch basins or storm drains. All solid and semi-solid debris resulting from the cleaning operations shall be removed from the site and taken to the wastewater treatment facility to which the debris would have arrived in the absence of the cleaning operation, unless directed otherwise. The Contractor is responsible for transporting the debris and must remove and properly dispose of excess water from the debris prior to disposal at the City's wastewater treatment facilities.

I. Where access to manholes in easements and rights-of-way is required, the Contractor shall obtain permission from the homeowner for equipment access.

Docusign Envelope ID: AFCB16A4-B390-89EA-8013-04580053D90F

J. Barricades and warning signs shall be used in work areas and around open manholes. The Contractor shall furnish and maintain traffic controls and safety devices as required.

K. Employ satisfactory precautions to protect the pipe and manholes from damage that might be inflicted by improper selection of the cleaning process or improper use of the equipment. Immediately notify Engineer if fresh soil, pieces of pipe, or other visible signs of potential problems occur during cleaning operation. When using hydraulically propelled devices, take precautions to ensure that the water pressure created does not cause damage or flooding to public or private property. Do not surcharge the wastewater beyond the elevation that could cause overflow of wastewater into area waterways or buildings, or onto the ground.

L. The Contractor shall clean upstream reaches of the system before the downstream reaches are cleaned. Hydro-cleaning equipment shall be inserted in the downstream manhole of the pipe segment, and the cleaning work shall proceed from upstream to downstream. Winching equipment used shall not damage the pipe or manholes.

20.06 SUBMITTALS

A. All submittals shall comply with Specification Section 03 - Submittals and are due as scheduled. Work will not proceed until all submittals are received and approved. The project manager reserves the right to adjust the due dates of the submittals based on Contractor performance. The Contractor shall label each submittal indicating what is represented, name of Contractor, and project number. All submittals identified as being in error shall be re-performed and corrected at the Contractor's expense.

B. Submittals Required with Bid Documents include:

1. List of references per specifications
2. Documentation of Certification of PACP Software
3. Asset Management and Viewing Software

C. Submittals required seven (7) days prior to the Pre- construction Meeting for CCTV Inspection or Pipe Cleaning

1. Name of the project supervisor and resumes.
2. Documentation of NASSCO PACP certification for all CCTV operators, database and software.
3. Site Safety Plan. A complete generic site safety plan must be submitted one week prior to the pre-construction meeting. Work will not begin until an approved site safety plan is in place.
4. Sample inspection CCTV data and video or data from other approved inspection method.
5. Acknowledgment of required nomenclature utilizing the provided FID

D. Submittals Required for the Pre-construction Meeting

Docusign Envelope ID: AFCB16A4-B390-89EA-8013-04580053D90F

1. An initial comprehensive schedule of work to be approved by the City.
2. Management Organization: Provide an organization chart depicting the essential organizational elements and senior personnel of the proposed Contractor and the functions and interrelationships of the personnel proposed to provide technical support, project management and supervision for this project. Provide succinct resumes of the personnel proposed to provide technical support and project management for this project. The personnel designated in the management summary for essential positions shall not be changed except with the permission of City. The City will only approve such a change when, in its opinion, the substitute personnel have equal or greater qualifications and experience to those intended to be replaced.
3. Proof that Contractor is an approved/bonded Contractor with the City.

E. Submittals Required One Week Prior to Any Cleaning & Televising Work

1. Site specific site safety plan addenda.
2. Entry releases, if applicable

F. Weekly Submittals

1. Detailed updates to the work schedule will be provided to the project manager no later than 1:00 p.m. on the Friday preceding the next week's cleaning and televising work.
2. USB External Storage Drive with CCTV videos, logs, and / or electronic worksheets submitted 7 days prior to work). All field paperwork must be submitted before the Contractor’s invoice will be processed for payment.
3. Corrections to punch list items as required by the project manager to fulfill the requirements of this specification.

G. Final Submittals Prior to Payment

1. Corrections to punch list items as required by the City to fulfill the requirements of this specification.

20.07 OWNER RIGHTS

A. The City reserves the right to stop the work when, in the project manager's judgment, the Contractor's work or activities are threatening the health and safety of the public or endangering the environment or endangering the waters of the state. Work shall not proceed until a satisfactory resolution has been achieved, as determined in the sole and unfettered opinion of the City.

Docusign Envelope ID: AFCB16A4-B390-89EA-8013-04580053D90F

B. The Contractor or Subcontractor shall not perform any work which is not specifically identified in the work schedule unless approved by the City. Notification of such work must be received no later than 8:00 a.m. on the day the work is to be performed. A list of persons available to be notified will be given at the pre-construction meeting.

20.08 EMERGENCY RESPONSE

The Contractor shall provide a telephone number and pager number to the City. These numbers are intended for the project manager's use in contacting the evening/weekend/holiday emergency work crew for emergencies resulting from the Contractor's actions or lack thereof during this project. This crew shall be responsible for contacting the City within one-half hour after the first verbal or electronic notification. If the Contractor's crew has not responded to the site of the emergency within one hour of the first summons, verbal or electronic, the City will make all necessary repairs and bill the Contractor for all work performed. Costs related to the emergency response will be incidental to the contract and not measured for payment.

20.09 SEQUENCE OF INSPECTION AND CLEANING

A. The Contractor shall coordinate with the City and any Jurisdictions required to isolate any pipe segments with significant flow that would prohibit cleaning and inspection. The cleaning and inspection of the pipe segment shall be done outside of peak hour flows. The steps to clean and inspect the pipe segment include:

1. The lift/pump stations contributing flow into the sewer line to be inspect and cleaned must be pumped down.
2. Once stations are pumped down, the stations shall be turned off and the sewer line must be plugged to allow work to commence.
3. The Contractor must monitor the levels within the stations at all times while work has started with City personnel present.
4. After inspection and cleaning within the pipe segment is completed, the plug shall be removed and the stations shall be restarted to be pumped down again.
5. Repeat steps 1-4 for each segment of sewer line to be cleaned or inspected.

B. The Contractor is responsible for the operation and maintenance of the bypass systems.

C. The Contractor shall perform all work associated with bypassing without causing damage to existing improvements to remain, and without causing a spill of sewage outside the sewer system. Any damage results from the Contractor's work shall be repaired or replaced to the satisfaction of the City, and at no cost to the City. All fines, and costs associated with the cleanup of spills, shall be the responsibility of the Contractor.

END OF SECTION

Docusign Envelope ID: AFCB16A4-B390-89EA-8013-04580053D90F

SECTION 21 – CURED-IN-PLACE-PIPE (CIPP)

21.01 GENERAL

It is the intent of this section of these Specifications to provide for the reconstruction of pipelines and conduits by the installation of a resin-impregnated flexible tube that is either inverted or pulled into the original pipeline/conduit and expanded to fit tightly against said pipeline by the use of water or air pressure. The resin system shall then be cured by elevating the temperature of the fluid (water/air) used for the inflation to a sufficient enough level for the initiators in the resin to affect a thermosetting reaction.

The Contractor shall furnish all materials, labor, equipment, and services necessary for liner installation including: traffic control, pump around pumping and/or diversion of wastewater flows, cleaning and closed circuit television video (CCTV) inspection of the pipe segment to be lined, service lateral reconnection, final CCTV inspection and testing of lined pipe system, surface restoration, and cleanup of the Work site.

The Contractor is advised that this Contract requires work in active wastewater collection systems and shall follow all federal, state and local requirements for safety in confined spaces. The Contractor shall conform to all guidelines by the Occupational Safety and Health Administration (OSHA) Federal Regulations; 29 CFR Ch. XVII, Section 1910.146 Confined Space Entry.

21.02 REFERENCE DOCUMENTS

This Specification references ASTM D5813 (Standard Specification for Cured-in-Place Thermosetting Resin Sewer Pipe) ASTM F1216 (Standard Practice for Rehabilitation of Existing Pipelines and Conduits by the Inversion and Curing of a Resin-Impregnated Tube), ASTM F1743 (Standard Practice for Rehabilitation of Existing Pipelines and Conduits by Pulled-In-Place Installation of Cured-In-Place Thermosetting Resin Pipe), and ASTM D3839 (Standard Practice for Underground Installation of “Fiberglass” (Glass-Fiber Reinforced Thermosetting Resin) Pipe).

21.03 QUALIFICATION REQUIREMENTS

The system proposed (materials, methods, workmanship) must be proven through previous successful installations to an extent and nature satisfactory to the City and the Engineer that is commensurate with the size of the project being proposed. Since CIPP is intended to have a 50-year design life, only products deemed to have this performance will be accepted. All products and installers must be pre-approved prior to the formal opening of proposals.

Products and Installers seeking approval must meet all of the following criteria to be deemed commercially acceptable:

For a Product to be considered Commercially Proven, a minimum of 250,000 linear feet and/or 1000 line sections must have been successfully installed in North America. The Manufacturer (Li–censor) shall have completed sufficient enough testing to document that the materials and the method(s) of installation proposed will produce the desired long-term performance. All products used shall conform to the Contract Documents and these Technical Specifications. Chemical grout designed for injection shall be: AV -100 chemical grout as manufactured by Avanti International, or approved equal.

Docusign Envelope ID: AFCB16A4-B390-89EA-8013-04580053D90F

For an Installer to be considered Commercially Proven, the Installer must satisfy all insurance, financial, and bonding requirements of the City, and must have at least three years active experience in the commercial installation of the product bid. The Installer's key personnel shall have at least 100,000 linear feet and/or 300 line sections of successful experience (included in this experience shall be a sufficient quantity of installations in the sizes proposed for this project). The Installer shall be "ISO" certified or demonstrate that he/she has a similar quality assurance system in place. Additionally, the Contractor shall be certified and/or licensed by the liner manufacturer(s) as an approved installer for the products referenced in this specification

Documentation for products and installers seeking pre-approved status must be submitted no less than two weeks prior to the proposal due date to allow time for adequate consideration. The City will advise of acceptance (or rejection) a minimum of three days prior to the due date. All required submittals must be satisfactory to the City.

21.04 SUBMITTALS

The Contractor shall submit the following information:

1. Manufacturer's certification that the materials to be used meet the referenced standards and these specifications.

2. License or certificate verifying Manufacturer's/Licensor's approval of the installer.

3. Proposed equipment and procedures for accomplishing the work.

4. Lining Manufacturer's product data and instructions for resin and catalyst system.

5. Contractor's procedures for sealing CIPP liners from groundwater infiltration/migration at manholes. Details of all component materials and construction details such as hydrophilic rubber seals.

6. Manufacturer's or Assembler's guidelines for storage procedures and temperature control, handling and inserting the liner, curing requirements and details, service connection methods, and trimming and finishing.

7. Manufacturer's or Assembler's guidelines for minimum and maximum pressures, temperatures, and time durations to be used during liner inversion, cure, and cool down. 8. Procedures for cool down and relieving static head after the CIPP liner is cured

8. Manufacturer's or Assembler's guidelines for factory and/or field (whichever applies) wet out procedures including: volume of resin per unit of liner, roller gap setting, mixing ratios and procedures for resin and catalyst/hardener, shelf life of resin, pot life of resin, and required wet out procedure to ensure full saturation.

9. The Contractor shall also provide field measurements and liner sizing calculations which demonstrate the liner wall thickness design for each pipe segment and that the liner has been properly undersized to avoid the creation of wrinkles or folds. Tabular liner wall thickness calculations shall be provided for each pipe diameter in no less than 1-foot increments from 1 foot to 6 feet cover depth and in 2-foot cover depth increments thereafter. The tabulated liner wall thickness

Docusign Envelope ID: AFCB16A4-B390-89EA-8013-04580053D90F

for each pipe diameter/cover depth interval shall be the maximum wall thickness calculated over the cover depth interval. Special liner wall thickness calculations shall be submitted for installations with less than 3 feet of cover. The liner wall thickness shall be increased as required based on actual pipe ovality determined by the pre-installation CCTV inspection.

10. The Contractor shall submit pump around pumping and/or diversion plans to the Engineer a minimum of 14 days prior to the needed use for review and approval. In some cases verbal confirmation of the plan and approval with the Engineer or City Inspector may be used in lieu of a written plan. The Contractor shall notify the Engineer a minimum of 48 hours prior to commencement of the pump around operation. Failure to receive approval by the Engineer or City Inspector may result in the Contractor's Work being halted at no cost to the City.

11. The Contractor shall submit drawings that identify the liner insertion, pump around pumping locations and methods with sufficient detail to assure that the Work can be accomplished without spill or discharge of wastewater. The pump around pumping plan shall include an emergency response plan to be followed in the event of a failure of the pumping system.

21.05 MATERIALS

21.05.01 The Tube

The tube shall consist of one or more layers of a flexible needled felt or an equivalent nonwoven or woven material, or a combination of nonwoven and woven materials, capable of carrying resin and withstanding the installation pressures and curing temperatures. The tube should be compatible with the resin system to be used on this project. The material should be able to stretch to fit irregular pipe sections and negotiate bends.

The tube should be sewn or flame-bonded to a size that, when installed, will tightly fit the internal circumference and the length of the original conduit. Allowances should be made for the longitudinal and circumferential stretching that occurs during placement of the tube.

The tube shall be uniform in thickness and when subjected to the installation pressures will meet or exceed the designed finish wall thickness.

Any plastic film applied to the tube on what will become the interior wall of the finished CIPP shall be compatible with the resin system used, translucent enough that the resin is clearly visible, and shall be firmly bonded to the felt material.

The outside of the tube shall be marked for distance at regular intervals along its entire length, not to exceed 5 feet. Such markings shall also include the lining manufacturer’s name or identifying symbol.

Seams in the tube shall be stronger than the non-seamed felt.

The minimum tube length shall be that deemed necessary by the Contractor to effectively span the distance from the inlet to the outlet of the respective manholes or access points, unless otherwise specified. The Contractor shall verify the lengths in the field before impregnation of the tube with

Docusign Envelope ID: AFCB16A4-B390-89EA-8013-04580053D90F

resin. An individual tube insertion operation may be made over multiple contiguous pipe segments as determined in the field by the Contractor and reviewed by the Engineer.

21.05.02 The Resin System

The resin system shall be a corrosion resistant polyester, vinylester, or epoxy and catalyst system that when properly cured meets the minimum requirements given herein or those that are to be utilized in the design of the CIPP for this project. Resin shall not be subjected to ultraviolet light and shall form no excessive bubbling or wrinkling during lining.

21.06 STRUCTURAL REQUIREMENTS

The design thickness of the liner shall be arrived at using standard engineering methodology. ASTM F1216, Appendix X1, has such an acceptable methodology that may be used where applicable. The long-term flexural modulus to be used in the design shall be verified through testing. The long-term modulus shall not exceed 50% of the short-term value for the resin system unless the tube contains reinforcements. In the event that a reinforced tube is utilized, the long-term flexural modulus shall be the percentage of the short-term modulus as determined by the above referenced testing.

The layers of the finished CIPP shall be uniformly bonded. It shall not be possible to separate any two layers with a probe or point of a knife blade so that the layers separate cleanly or such that the knife blade moves freely between the layers. If separation of the layers occurs during testing of the field samples, new samples will be cut from the work. Any reoccurrence may be cause for rejection of the work.

The finished CIPP shall fit tightly to the host pipeline at all observable points and shall meet or exceed the minimum thickness established by the design process. The materials properties of the finished CIPP shall meet or exceed the following structural standards:

MINIMUM PHYSICAL PROPERTIES

Property	ASTM Test Method	Polyester System	Filled Polyester System	Vinyl Ester System
Flexural Strength	D790	4,500psi	4,500psi	5,000psi
Flexural Modulus (Initial)	D790	250,000psi	400,000psi	300,000psi
Flexural Modulus (50 Yr)	D790	125,000psi	200,000psi	150,000psi
Tensile Strength	D638	3,000psi	3,000psi	4,000psi

The required CIPP liner wall thickness shall be based, as a minimum, on the physical properties in Section 17.080 of this Specification, in accordance with the design equations in the Appendix of ASTM F1216, and the following design parameters:

Docusign Envelope ID: AFCB16A4-B390-89EA-8013-04580053D90F

Design Safety Factor	=	2
Retention Factor for Long-Term Flexural Modulus to be used in Design *(as determined by Long-Term tests described in Section 17.08B)*	=	1% - 50%

Ovality	=	5%
Groundwater Depth (above invert)	=	Assume at Existing Grade
Soil Depth (above crown)	=	Based on field measurements
Soil Modulus	=	700 psi
Soil Density	=	120 pcf
Live Load	=	AASHTO HS - 20
Design Condition	=	Fully Deteriorated
Enhancement Factor	=	7.0
Poisson's Ratio	=	0.3

The CIPP liner material shall conform to the minimum wall thicknesses, as listed below:

MINIMUM WALL THICKNESSES

CIPP	Thickness
4"-6"	3.0 mm
8"-12"	6.0 mm
15"	7.5 mm
18"-21"	9.0 mm
24"-27"	10.5 mm
30"-36"	12.0 mm
42"	13.5 mm
48"	15.0 mm

Any layers of the tube that are not saturated with resin prior to insertion into the host pipe shall not be included in the CIPP liner wall structural thickness computation.

21.07 INSTALLATION

The CIPP shall be installed in accordance with the practices given in ASTM F1216 (for direct inversion installations) or ASTM F1743 (for pulled-in-place installations). The quantity of resin used for the tube's impregnation shall be sufficient to fill the volume of air voids in the tube with additional allowances being made for polymerization shrinkage and the anticipated loss of any resin through cracks and irregularities in the original pipe wall. A vacuum impregnation process shall be used in conjunction with a roller system to achieve a uniform distribution of the resin throughout the tube. The impregnated liner tube shall be transported to and stored at the site in such a manner that it will not be damaged, exposed to direct sunlight, or result in any public safety hazard. The impregnated liner tube shall be kept cool during shipment and storage. All materials shall be subject to inspection and review prior to installation.

Docusign Envelope ID: AFCB16A4-B390-89EA-8013-04580053D90F

Contractor shall ensure that an Engineer approved procedure is followed for sealing the liner from all groundwater infiltration and migration at connections to and within all manholes. Hydrophilic sealing material shall be placed per the Manufacturer's recommended product guidelines and Contractor's/Manufacturer's approved procedures prior to liner installation. Temperature gauges shall be placed at the upstream and downstream ends of the reach being lined to monitor the pressurized fluid's (air or water) temperature. In addition to monitoring the temperature inside the tube, temperature gauges shall be placed between the host pipe and the liner at as many points as is practical to record the heating that takes place on the outside of the liner. The impregnated tube shall be inserted through an existing manhole or access structure by means of the manufacturer's recommended installation process in accordance with ASTM F1216. The application of hydrostatic head, compressed air, or other means shall fully extend the CIPP liner to the next designated manhole or termination point and inflate and firmly adhere the liner to the host pipe wall. The liner tube shall be installed at a rate less than 10 feet per minute at all times. If the CIPP liner installation fails, the Contractor shall be responsible for operating the bypass pumping equipment for the additional time required until the installation can be completed, at the Contractor's expense.

Curing of the resin system shall be as per the Manufacturer (Licensor) of the CIPP product. The temperatures achieved and the duration of holding the pressurized fluid at those temperatures shall be per the Manufacturer's (Licensor's) established procedures. If a heat source is required after placement is completed, suitable heat source and distribution equipment shall be provided. The equipment shall be capable of circulating hot water, air, and/or steam throughout the section by means of a pre-strung hose which has been perforated in accordance with the manufacturer's recommendations or other methods acceptable by the Engineer to raise the temperature uniformly above the temperature required to affect a resin cure. This temperature shall be determined by the manufacturer based on the resin/catalyst system employed. The heat source piping shall be fitted with continuous monitoring thermocouples to gauge the temperature of the incoming and outgoing water, steam, and/or air supply. Water, steam, or air temperature during the cure period shall meet the requirements of the resin manufacturer as measured at the heat source inflow and outflow return lines. The Contractor shall provide standby equipment to maintain the heat source supply. An additional continuous monitoring thermocouple shall be placed between the impregnated felt tube and the pipe invert at the remote manhole and at a point midway between the upstream and downstream manholes to determine the temperature during the cure. The temperature during the cure shall not be less than 130 degrees F at the boundary between the pipe wall and the liner unless otherwise required because of the resin system used. The initial cure shall be deemed to be completed when inspection of the exposed portions of the liner appears hard and sound and the remote temperature sensors indicate that an exotherm has occurred. The cure period shall be of duration and temperature recommended by the resin manufacturer during which time the recirculation of the water, steam, and/or air and cycling of the heat exchanger continuously maintain the required temperature. A data logger shall be used for Main Liners to continuously record temperature, pressure and time during heating, cure and cool down of the liner at the insertion, intermediate and termination manholes. Where requested, this data shall be provided to the Engineer for each pipe segment.

The cured liner shall be cooled to a temperature below 100 degrees F before relieving the static head or pressure in the lined pipe and returning normal flow back into the system. The cool down may be accomplished by introducing cool water or air into the lined pipe. Care shall be taken in the release of the static head or pressure so that a vacuum will not develop which could damage the newly installed liner. Water for cooling shall be supplied by the Contractor. The finished liner shall be continuous over the

Docusign Envelope ID: AFCB16A4-B390-89EA-8013-04580053D90F

length of the host pipe and be free from defects such as dry spots, delamination and lifts. All materials other than the cured liner should be removed from the pipe by the Contractor.

21.08 CIPP MAIN LINER TERMINATION AND CONNECTION IN MANHOLES

A. The liner shall achieve a watertight seal through the manhole channel/invert and at the host pipe(s) where it enters/exits any manhole. The use of fiber felt and a suitable resin system, hydrophilic rubber waterstops, injection grouting, or other Engineer approved methods compatible with the liner shall be used to ensure a watertight CIPP liner system. CIPP liner entries at manholes shall be smooth and free of irregularities. The top half of the CIPP liner shall be neatly cut at least 4-inches away from the wall.

B. The channel in the manhole shall be a smooth continuation of the pipe(s) and shall be merged with other pipes or channels. All manholes shall be individually inspected for liner cut off, benches and sealing Work. Any visible leaks through or around the CIPP liner shall be corrected by an approved method at the Contractor's expense. It is anticipated that some pipe to manhole connections will require supplementary efforts to affect an acceptable watertight seal.

C. The channel in the manhole shall be a smooth continuation of the liner and pipe(s) and shall be merged with other channels. Inverts and/or benches shall be resurfaced/repaired (or constructed where necessary as directed by the Engineer) to provide a smooth flow channel. The Engineer may also require that the manhole floor and base section receive an approved monolithic coating which is chemically compatible with the CIPP liner, and any chemical/cementitious grout or repair material used in the manhole.

21.09 SERVICE RECONNECTION

A. The Contractor shall be responsible for internally reopening the service connections to the lined pipe using a pivot-head CCTV inspection camera and a remote cutting tool. The Contractor shall locate the service connections from inside the lined pipe, cut a hole matching the connection diameter, and grout the area where the service connection enters the lined pipe to produce a watertight seal approved by the Engineer. Grouting of service connections shall be accomplished using a "Logiball" type lateral packer to seal the first 18 inches of the service connection in accordance with the manufacturer's instructions and the Technical Specifications. The Contractor shall provide a nearly full-diameter hole, free from burrs, loose or abraded material, hanging fibers or projections, and with a neat, smooth and crack-free edge. The hole shall be 95 percent minimum and 100 percent maximum of the original service connection diameter. The invert of the service connection shall match the bottom of the reinstated service opening. The Contractor shall certify he has a minimum of 2 complete working cutters plus spare key components on the site before each installation. All cuttings shall be collected and disposed of properly.

B. All service connections shall be reopened including those that go to unoccupied or abandoned buildings or vacant lots, unless directed otherwise by the Engineer. Begin reconnection of services within four hours after liner insertion. The Contractor shall initially reopen each connection in an expeditious manner with a less than a full size opening to release wastewater temporarily stored in the service lateral. The Contractor shall then complete reconnection of all services within 24 hours. The Contractor shall immediately reopen any missed connections and repair any holes drilled in

Docusign Envelope ID: AFCB16A4-B390-89EA-8013-04580053D90F

error. Faulty cuts shall be repaired by methods approved by the Engineer at no additional cost to the City.

C. It is the intent of these Specifications that service connections be reopened without excavation. No additional payment will be made for excavations for the purpose of reopening connections and the Contractor will be responsible for all costs and liability associated with such excavation and restoration work.

21.10 INSTALLATION RESPONSIBILITIES FOR INCIDENTAL ITEMS

It shall be the responsibility of the Owner to locate and designate all manhole access points open and accessible for the work, and to provide rights of access to these points. If a street must be closed to traffic because of the orientation of the pipeline, the Owner shall institute the actions necessary to do this for the mutually agreed time period. The Owner shall also provide free access to water hydrants for cleaning, installation of the tube, and other work items requiring water.

The Contractor, when required, shall remove all internal debris out of the pipeline that will interfere with the installation of the CIPP. The Owner shall provide a dumpsite for all debris removed during the cleaning operations. Unless stated otherwise, it is assumed that this site will be at or near the sewage treatment facility to which the debris would have arrived in absence of the cleaning operation. Any hazardous waste encountered during this project will be considered as a changed condition.

The Contractor, when required, shall provide for the flow of sewage around the section, or sections, of pipe designated for rehabilitation. The bypass shall be made by plugging the line at the existing upstream manhole and pumping the flow into a downstream man- hole or adjacent system. The pump and bypass lines shall be of adequate capacity and size to handle the anticipated flow. The City may require a detail of the bypass plan to be submitted.

Experienced personnel trained in locating breaks, obstacles, and service connections by close circuit television shall perform inspection of the pipelines. The interior of the pipe- line shall be carefully inspected to determine the location of any conditions that may pre- vent proper installation of the CIPP into the pipelines, and it shall be noted so that these conditions may be corrected. A videotape and suitable log shall be kept for later reference by the City.

It shall be the responsibility of the Contractor to clear the line of obstructions such as solids and roots that will prevent the insertion of CIPP. If pre-installation inspection reveals an obstruction such as a protruding service connection, dropped joint, or a collapse that will prevent the installation process, and it cannot be removed by conventional sewer cleaning equipment, then the Contractor shall make a point repair excavation to uncover and remove or repair the obstruction. Such excavation shall be approved in writing by the City's representative prior to the commencement of the work and shall be considered as a separate pay item.

The Contractor shall make every effort to maintain service usage throughout the duration of the project. In the event that a service will be temporarily out of service, the maximum amount of time of no service shall be 16 hours for any property served by the sewer. The Contractor shall be required to notify the City and all affected properties whose service laterals will be out of commission and to advise against water usage until the sewer main is back in service. Such notification shall be provided to the Utility Department at least one week prior to service disconnecting.

Docusign Envelope ID: AFCB16A4-B390-89EA-8013-04580053D90F

A public notification program shall be implemented, and shall as a minimum, require the Contractor to be responsible for contacting each home or business connected to the sanitary sewer and informing them of the work to be conducted, and when the sewer will be off-line. The Contractor shall also provide the following:

A. Written notice to be delivered to each home or business describing the work, schedule, how it affects them, and a local telephone number of the Contractor they can call to discuss the project or any problems that could arise.

B. Personal contact and attempted written notice the day prior to the beginning of work being conducted on the section relative to the residents affected.

C. Personal contact with any home or business that cannot be reconnected within the time stated in the written notice.

21.11 QUALITY ASSURANCE PROCEDURES

21.11.01 Material

A. All material testing shall be performed and certified by a registered independent, third-party laboratory.

B. Wall thickness of samples shall be determined as described in ASTM F1216, Section 8 or ASTM F1743, Section 8. The minimum wall thickness at any point shall not be less than 87.5% of the design thickness as calculated in Section 17.08 of this Specification.

C. The Contractor shall obtain, prepare and store appropriate samples for all liners installed under this Contract. The Contractor shall provide samples of the cured lining material from the actual installed liner at a minimum of one set per each liner insertion setup. The preparation and testing of these samples shall be in accordance ASTM F1216, Section 8. The Contractor shall coordinate the required testing of the samples with the laboratory, and the City will pay for the initial testing of these samples in accordance with the pay item. The Contractor shall pay for the cost of retests made necessary by the failure of the samples to meet the specified requirements.

D. The cured liner shall be sampled and tested for flexural strength and flexural modulus (short term). Flexural strength and modulus shall be tested in accordance with the requirements of ASTM 0790. The liner shall be in compliance with the physical properties stated in this Specification.

E. Corrosion resistance requirements shall be as stated in ASTM F1216, Section X2, Chemical Resistance Tests.

21.11.02 Field

A. Up to 10 percent of the installed CIPP Main Liners may be tested for exfiltration in accordance with ASTM F1216, Section 8.2 prior to service lateral reconnections. Testing shall exclude maximum pressure limitation (4.3 psi) at lowest end. Leakage testing shall be performed after

Docusign Envelope ID: AFCB16A4-B390-89EA-8013-04580053D90F

all dry and non-bondable hoses and tubes are completely removed from the liner. If the liner fails the test, Contractor shall repair or replace liner as required until the tested segment passes.

B. After completion of the installation of Main Liners, service reconnections, and finish work at the manholes, the lined pipe and adjacent manholes shall be televised by the Contractor at his expense, with a color CCTV inspection tilt-head camera recorded in digital format, as required by these Specifications. Pre-installation and post-rehabilitation inspections shall either be recorded on the same media or shall be referenced, if recorded on separate media. Acceptance of the Work shall be based on Engineer's review of the CCTV inspection. Post-rehabilitation CCTV inspection shall not be performed in conjunction with cleaning operations and the liner wall shall be as dry as practical during this inspection (no dripping or splashing). All CCTV inspections delivered to the City shall be in accordance with the Technical Specifications.

END OF SECTION

Docusign Envelope ID: AFCB16A4-B390-89EA-8013-04580053D90F

SECTION 23 – FIBERGLASS WET WELL OR MANHOLE LINER

23.01 GENERAL

Fiberglass reinforced polyester wet wells shall be manufactured from commercial grade polyester resin or vinyl ester resin, with fiberglass reinforcements. The resin system shall be suitable for atmospheres containing hydrogen sulfide and dilute sulfuric acid as well as other gases associated with the wastewater collection systems. The manhole liner or fiberglass wet well shall be a one-piece unit manufactured to meet or exceed all specifications of A.S.T.M. D-3753 latest edition as manufactured by L.F. Manufacturing, Inc., Giddings, Texas, or an approved equal. Section 37 “Wastewater Structure Rehabilitation” contains additional information about fiberglass liners and will govern over this section in the event of a conflict.

23.02 MATERIALS

A. RESIN:
The resins used shall be a commercial grade unsaturated polyester resin.

B. REINFORCING MATERIALS:
The reinforcing materials shall be commercial Grade “E” type glass in the form of mat, continuous roving, chopped roving, roving fabric, or a combination of the above, having a coupling agent that will provide a suitable bond between the glass reinforcement and the resin.

20.02.01 FIBERGLASS WET WELL MATERIALS

A. SURFACING MATERIALS
If reinforcing materials is used on the surface exposed to the contained substance, it shall be a commercial grade chemical-resistant glass that will provide a suitable bond with the resin and leave a resin rich surface.

B. FILLERS AND ADDITIVES
Fillers, when used, shall be inert to the environment and wet well construction. Additives, such as thixotropic agents, catalysts, promoters, etc., may be added as required by the specific manufacturing process to be used. The resulting reinforced plastic material must meet the requirement of this specification.

20.02.02 FRP MANHOLE LINER MATERIALS

A. INTERIOR SURFACING MATERIAL
The inner surface exposed to the chemical environment shall be a resin-rich layer of 0.010 to 0.020 inch thick. The inner surface layer exposed to the corrosive environment shall be followed with a minimum of two passes of chopped roving of minimum length 0.5 inch (13 mm) to maximum length of 2.0 inch (50.8 mm) and shall be applied uniformly to an equivalent weight of 3 oz/ft. Each pass of chopped roving shall be well rolled prior to the application of additional reinforcement. The combined thickness of the inner surface and interior layer shall not be less than 0.10 inch (2.5 mm).

Docusign Envelope ID: AFCB16A4-B390-89EA-8013-04580053D90F

B. WALL CONSTRUCTION PROCEDURE:
After inner layer has been applied the manhole liner wall shall be constructed with chop and continuous strand filament wound manufacturing process which insures continuous reinforcement and uniform strength and composition. The cone section, if produced separately, shall be affixed to the barrel section at the factory with resin-glass reinforced joint resulting in a one piece unit. Seams shall be fiberglassed on the inside and the outside using the same glass-resin jointing procedure. Field joints shall not be acceptable by anyone except the manufacturer.

C. EXTERIOR SURFACE:
For a UV inhibitor the resin on the exterior surface of the manhole liner shall have gray pigment added for a minimum thickness .125 inches

D. FILLERS AND ADDITIVES:
Fillers, when used, shall be inert to the environment and manhole construction. Sand shall not be accepted as an approved filler. Additives, such as thixotropic agents, catalysts, promoters, etc., may be added as required by the specific manufacturing process to be used to meet the requirements of this standard. The resulting reinforced-plastic material must meet the requirements of this specification.

23.03 WET WELL FABRICATION

A. EXTERIOR SURFACE:
The exterior surface shall be relatively smooth with no sharp projections. Handwork finish is acceptable if enough resin is present to eliminate fiber show. The exterior surface shall be free of blisters larger than ½ inch in diameter, delamination and fiber show.

B. INTERIOR SURFACE:

The interior surface shall be resin rich with no exposed fibers. The surface shall be free of grazing, delamination, blisters larger than ½ inch in diameter, and wrinkles of 1/8 inch or greater in depth. Surface pits shall be permitted up to 6 square feet if they are less than ¾ inch in diameter and less than 1/16 inch deep.

C. FIBERGLASS REINFORCED BOTTOM:

The bottom to be fabricated using fiberglass material as stated in Section 20.02. Material and installation to meet all physical requirements as per Section 20.05. Bottom to be attached to wet well pipe with fiberglass layup to comply with A.S.T.M.-D3299 specifications. When reinforcement is necessary for strength, the reinforcement shall be completely enclosed with a fiberglass layup per A.S.T.M.-D3299.

D. FIBERGLASS REINFORCED TOP:

The fiberglass wet well top shall be fabricated using fiberglass material as stated in Section 20.02. Material and installation to meet all physical requirements as per Section 20.05. Top to be attached to wet well pipe with fiberglass layup to comply with A.S.T.M.-D3299 specifications.

Docusign Envelope ID: AFCB16A4-B390-89EA-8013-04580053D90F

When reinforcement is necessary for strength, the reinforcement shall be completely enclosed with a fiberglass layup per A.S.T.M.-D3299.

E. INSTALLATION OF STUBOUTS:

Effluent, service, or discharge lines made be factory installed. Approved methods are PVC sewer pipe, Inserta-Tee fittings, or Kor-N-Seal boots. Installation of stubouts to be fiberglass layup to comply with A.S.T.M.-D3299 specifications.

F. DEFECTS NOT PERMITTED:

A. Exposed fibers: glass fibers not wet out with resin
B. Resin runs: runs of resin and sand on the surface.
C. Dry areas: areas with glass not wet out with resin.
D. Delamination: separation in the laminate.
E. Blisters: light colored areas larger than ½ inch in diameter.
F. Crazing: cracks caused by sharp objects.
G. Pits of Voids: air pockets.
H. Wrinkles: smooth irregularities in the surface
I. Sharp projection: fiber or resin projections necessitating gloves for handling.

23.04 FRP MANHOLE LINER DESIGN

A. INTERIOR ACCESS:

All manhole liners shall be designed so that a ladder or step system can be supported by the installed manhole liner.

B. MANWAY REDUCER:

Manway reducers will be concentric with respect to the larger portion of the manhole liner diameters through 60 inches. Larger manhole liners may have concentric or eccentric manway reducer openings.

C. COVER AND RING SUPPORT:

The manhole liner shall provide an area for which grade rings or brick can be installed to accept a typical metal ring and cover and have the strength to support a traffic load without damage to the manhole liner.

D. EXTERIOR SURFACE:

The exterior surface shall be relatively smooth with no sharp projections. Hand-work finish is acceptable if enough resin is present to eliminate fiber show. The exterior surface shall be free of blisters larger than 0.5 inch in diameter, delamination or fiber show.

E. INTERIOR SURFACE:

Docusign Envelope ID: AFCB16A4-B390-89EA-8013-04580053D90F

The interior surface shall be resin rich with no exposed fibers. The surface shall be free of crazing, delamination, blisters larger than 0.5 inch in diameter and wrinkles of 0.125 inch or greater in depth. Surface pits shall be permitted if they are less than 0.75 inch in diameter and less than 0.0625 inch deep. Voids that cannot be broken with finger pressure and that are entirely below the resin surface shall be permitted if they are less than 0.5 inch in diameter and less than 0.0625 inch thick.

F. REPAIRS:

Any manhole repair is subject to meet all requirements of this specification.

G. MANHOLE LENGTH:

Manhole lengths shall be in 6-inch increments +/- 2 inches.

H. DIAMETER TOLERANCE:

Tolerance of inside diameter shall be +/- 1% of required manhole diameter.

23.05 PHYSICAL REQUIREMENTS

20.05.01 LOAD RATING

The complete wet well or manhole liner shall have a minimum dynamic-load rating of 16,000 ft-lbs when tested in accordance with A.S.T.M. 3753 Section 8. To establish this rating, the complete wet well or liner shall not leak, crack, or suffer other damage when load tested to 40,000 lbs and shall not deflect vertically downward more than ¼ inch at the point of load application when loaded to 24,000 lbs.

20.05.02 STIFFNESS

The wet well or manhole liner cylinder shall have a minimum pipe-stiffness values shown in the table below when tested in accordance with A.S.T.M. 3753 Section 8.

STIFFNESS REQUIREMENTS

FIBERGLASS WET WELL		MANHOLE LINER	
LENGTH-FT	F/AY – PSI	LENGTH-FT	F/AY – PSI
10 - 20	2.01	3 – 6.5	0.75
21 - 30	3.02	7 – 12.5	1.26
31 - 40	5.20	13 - 20.5	2.01

PHYSICAL PROPERTIES:	FIBERGLASS WET WELL		MANHOLE LINER	
	HOOP DIRECTION	AXIAL DIRECTION	HOOP DIRECTION	AXIAL DIRECTION
a. Tensile Strength (psi)	18,000	5,000	18,000	5,000
b. Tensile Modules (psi)	0.8 x 10^6	0.7 x 10^6	0.6 x 10^6	0.7 x 10^6
c. Flexural Strength (psi)	26,000	4,500	26,000	4,500
d. Flexural Modules (psi)	-	-	1.4 x 10^6	0.7 x 10^6
(no ribs – 48”, 60”, 72”)	1.4 x 10^6	0.7 x 10^6	-	-

Docusign Envelope ID: AFCB16A4-B390-89EA-8013-04580053D90F

(with ribs – 96", 144")	0.7 x 10^6	0.7 x 10^6	-	-
e. Compressive (psi)	-	-	18,000	5,000

23.06 TEST METHODS

Tests shall be performed as specified in A.S.T.M. 3753 latest edition, Section 8.

23.07 INSTALLATION

23.07.01 FIBERGLASS WET WELL INSTALLATION

A. EXCAVATION:

A. General:

The limit of excavation shall be such to allow for placing and removing forms, installing sheeting, shoring, bracing, etc. The Contractor shall pile excavated material in a manner that will not endanger the work and will avoid obstructing sidewalks, driveways, power poles, etc. Drainage shall be kept clear.

B. Vertical Sides:

When necessary to protect existing or proposed structures or other improvements, the Contractor shall maintain vertical sides of the excavation. The limit shall not exceed three feet outside the footing on a vertical plane parallel to the footing except where specifically approved otherwise by the Engineer. The Contractor shall provide and install any sheeting, shoring, and bracing as necessary to provide a safe work area as required to protect workmen, structures, equipment, power poles, etc. The Contractor shall be responsible for the design and adequacy of all sheeting, shoring, and bracing. The sheeting, shoring, and bracing shall be removed as the excavation is backfilled in such a manner as to prevent injurious caving.

C. Sloping sides:

Where sufficient space is available, the Contractor shall be allowed to back slope the sides of the excavation. The back slope shall be such that the excavation shall be safe from caving. The type of material being excavated shall govern the back slope used, but in any case, the back slope shall be no steeper than 1 foot horizontal to 1 foot vertical.

D. Dewatering:

The Contractor shall keep the excavation free from water by use of cofferdams, bailing, pumping, well pointing, or any combination as the particular situation may warrant. All dewatering devices shall be installed in such a manner as to provide clearance for construction, removal of forms, and inspection of exterior of form work. It is the intent of these specifications that the foundation be placed on a firm dry bed. The foundation bed shall be kept in a dewatered condition a sufficient period of time to insure the safety of the structure. All dewatering methods and procedures are subject to the review and

Docusign Envelope ID: AFCB16A4-B390-89EA-8013-04580053D90F

acceptance of the Engineer. The excavation shall be protected from excessive rainfall, drainage and drying. It is the intent of these specifications that the Contractor provide a relatively smooth, firm foundation bed for footings and slabs that bear directly on the undisturbed earth without additional cost to the Owner, regardless of the soil conditions encountered. The contractor shall pile excavated material in a manner that will not endanger the work.

E. Unauthorized Over Excavation:

Excavation for slabs, footings, etc., that bear on earth shall not be carried below the elevation shown on the drawings. In the event the excavation is carried on below the indicated elevation, the Contractor shall bring the slab, footing, etc., to the required grade by filling with concrete having a minimum compressive strength of at least 3,000 psi at 28 days.

B. OPEN BOTTOM WETWELL INSTALLATION:

Bottom of excavation should be compacted to 95% Standard Proctor Density. Pour reinforced concrete base one foot deep and at least two feet larger than the fiberglass wet well outside diameter. As soon as the concrete has set-up enough to support the fiberglass wet well, lower the wet well into place. Pour a minimum of one foot of reinforced concrete on the inside, also a minimum of one foot deep and two feet from the fiberglass wet well wall on the outside of the wet well. Insert ram neck type sealant on the outside of fiberglass wet well around the bottom where the fiberglass and concrete come together.

C. CUTOUTS:

Cutouts in wet well wall should be made with proper cutting tools, such as jig saw or hole saw. Do not use axe or other impact-type tools.

D. INSTALLATION OF SEWER PIPE:

A. Type1: Make the cutout in the wet well wall, the outside diameter of pipe, plus 1/2 inch maximum. Slip pipe into position. Apply industrial grade silicone around the pipe next to the wet well wall cutout on the inside and on the outside. Cover the outside siliconed area with epoxy grout and backfill.

B. Type 2: Make the cutout in the wet well wall, the outside diameter of pipe, plus 1/2 inch maximum. Grind the outside surface of the pipe and both the inside and the outside surfaces of the cutout in the wet well wall. (Apply a priming agent to any PVC pipe that might be used before fiberglass lay-up.) Insert the pipe through the cutout in the wall of the wet well. Apply fiberglass putty to the inside and the outside of the wet well wall cutout, filling openings between pipe and cutout. Make a good radius for the fiberglass lay-up. After putty has set-up, fiberglass the pipe into place. Use one layer of woven roving sandwiched between two layers of fiberglass mat. Allow fiberglass to completely set-up before backfilling. Fiberglass layup method to comply with A.S.T.M.-D3299 specifications.

Docusign Envelope ID: AFCB16A4-B390-89EA-8013-04580053D90F

C. Type 3: Install Insert-A-Tee type fitting per manufacturers instruction. (Fowler Mfg. Co., P.O. Box 767, Hillsboro, Or. 97123. PH. 503-359-5417) or approved equal.

E. CLOSED BOTTOM WET WELL INSTALLATION:

Bottom of excavation should be compacted to 95% Standard Proctor Density. Wet wells with diameters up to 54 inches and depths no greater than 12 feet, may be placed on a base of 6 inches of crushed stone. Wet wells with depths greater than 12' feet, should have a poured reinforced concrete base at least one foot deep and at least two feet larger than fiberglass wet well outside diameter. The fiberglass wet well shall be lowered into the wet concrete and brought to plumb. Pour reinforced concrete over the anti-flotation flange. The concrete shall be a minimum of one foot deep and two feet from outside wall of the wet well. More concrete may be required in high water table areas.

F. INTERNAL BOTTOM RIBS:

Wet wells with internal bottom stiffening ribs will require that concrete be poured on the inside of the wet well to a depth equal to that of the stiffening ribs. This is typically 4 – 6 inches.

G. FIBERGLASS WET WELL TOP:

The fiberglass top may have stubouts installed or may have a raised fiberglass collar around the hatch opening. The fiberglass top has been designed to withstand the weight of a concrete reinforced slab to be installed over it.

H. BACKFILL:

A. Backfill Material: Unless shown otherwise on the drawings, sand or crushed stone shall be used for backfill around the wet well for a distance of two feet from the outside surface and extending from the bottom of the excavation to the bottom of the top slab. Suitable material chosen from the excavation may be used for the remainder of the backfill. The material chosen shall be free of large lumps or clods, which will not readily break down under compaction. This material will be subject to review and acceptance of the Engineer. Backfill material shall be free of vegetation or other extraneous material. Excavated materials which are to be used for fill or backfill may be stockpiled on the site. Location of stockpiles shall be approved by the City. Top soil should be stockpiled separately and used for finish grading around the structure.

B. Schedule of Backfilling: The Contractor may begin backfilling of wet well as soon as the concrete has been allowed to cure and the forms removed.

C. Backfill Lifts: Backfill shall be placed in layers of not more than 12 loose measure inches and mechanically tamped to at least 95% Standard Proctor Density. Flooding will not be permitted. Backfill shall be placed in such a manner as to prevent any wedging action against the structure.

I. TOP SLAB SUPPORT:

Docusign Envelope ID: AFCB16A4-B390-89EA-8013-04580053D90F

When installing a fiberglass wet well without a fiberglass top you should pour a reinforced concrete slab support a minimum of two feet outside of fiberglass wet well wall and a minimum of six inches thick. The slab shall be specified and designed by engineer or precast manufacturer engaged by contractor per Contract Documents.

23.07.02 FRP MANHOLE LINER INSTALLATION

Unless shown otherwise on drawings and approved by the engineer, concrete grout shall be used for backfill between the old manhole and the new fiberglass manhole liner. The backfill around the excavated reducer section shall be stabilized sand or crushed stone. The material chosen shall be free of large lumps or clods which will not readily break down under compaction. This material will be subject to approval by the engineer.

The concrete grout backfill shall be poured in layers of not more than 12 inches in even lifts. The reducer section to be backfilled in 12-inch lifts evenly and compacted to 95% Standard Proctor Density.

23.08 SHIPPING AND HANDLING

23.08.01 FIBERGLASS WET WELL SHIPPING AND HANDLING

Do not drop or impact the wet well. Wet wells shall be chocked if stored horizontally. If wet wells must be moved by rolling, the ground transversed shall be smooth and free of rocks, debris, etc. FRP wet wells may be lifted by the installation of two lifting lugs as specified by the manufacturer on the outside surface near the top or by a sling or “choker” connection around the center. Use of chains or cables in contact with the wet well surface is prohibited. Wet wells may be lifted horizontally using one support point.

23.08.02 FRP MANHOLE LINER SHIPPING AND HANDLING

Do not drop or impact the fiberglass manhole liner. Fiberglass manhole liner may be lifted by inserting a 4″x 4″x 30″ timber into the top of manhole with cable attached or by a sling or “choker” connection around center of manhole, lift as required. Use of chains or cables in contact with the manhole surface is prohibited.

END OF SECTION

Docusign Envelope ID: AFCB16A4-B390-89EA-8013-04580053D90F

SECTION 33 – FRAC-OUT PLAN FOR SUBAQUEOUS CROSSINGS

33.01 GENERAL

A. The Contractor must implement and adhere to the Best Management Practices (BMPs) and Frac-Out Plan as outlined in this Specification Section for projects including subaqueous transmission lines installed, repaired, or replaced using horizontal directional drilling and permitted through the US Army Corps of Engineers (USACE).

B. The Contractor shall furnish all necessary equipment and provide the necessary labor to adhere to the BMPs and Frac-Out Plan procedures.

33.02 BEST MANAGEMENT PRACTICES (BMPs)

The Contractor will implement the following Best Management Practices (BMPs) to minimize the potential for adverse environmental impacts during horizontal directional drilling activities:

A. BMPs for erosion control within the staging area shall be implemented and maintained at all times during the drilling and back-reaming operations to prevent siltation and turbid discharges in excess of State Water Quality Standards pursuant to Rule 62-302, F.A.C. Methods shall include, but are not limited to the immediate placement of turbidity containment devices such as turbidity screen, silt containment fence, hay bales, and earthen berms, etc. to contain the drilling mud. Earthen berms shall not be utilized as to impact wetlands or other surface waters.

33.03 FRAC-OUT PLAN

A. Measures used to prevent frac-out during the HDD operation shall include maintaining the proper boring depth for the soil conditions along the drilling route as well as proper management of drilling fluids circulation pressure. The minimum distance between the top of the over-ream hole and surface shall be maintained according to the Contract Documents. This distance should be sufficient to prevent frac-out when drilling with controlled and monitored drill fluid pressure.

B. Non-toxic fluorescent dyes will be added to the drilling lubricant as a method for monitoring bentonite releases in the underwater portions of this drilling. Details of the fluorometry monitoring method shall be submitted to the USACE prior to the pre-construction meeting

C. Drilling fluid returns (flow of drilling fluids to the HDD entry/exit pit location) will be continuously monitored visually during the installation.

D. The volume and circulation pressure of drilling fluid in the HDD bore and over-ream shall be monitored at all times during the HDD operation. The HDD drill rig operator will monitor the downhole annular pressure at all times. Should a drop in volume occur, immediately conduct a visual inspection of both terrestrial and pavement portions of the HDD corridor. A visual inspection of all project area and adjacent waterbodies, and storm and sanitary sewer systems shall also be conducted.

Docusign Envelope ID: AFCB16A4-B390-89EA-8013-04580053D90F

E. Should the detection of dye or a drop in volume of bentonite occur, the Contractor will follow the Release Procedures outlined below.

F. All drilling fluids associated with the HDD operation shall be contained onsite. The volume of the drilling fluids recirculation/solids settlement pit and onsite storage/frac tanks and watertight roll-off containers shall be submitted for review by the Engineer. As required during the HDD process, screened solids and surplus drilling fluid will be removed and disposed of off the project site at a location of the HDD Contractor's choice in accordance with applicable regulations. At the conclusion of all drilling operations, drilling fluid remaining in the pit will be settled, removed completely from the pit, and hauled to a disposal site of the HDD Contractor's choice in accordance with applicable regulations within 48 hours of the pipe pull-in. After back-reaming, drilling materials will be removed from the inside of the pipeline by pigging it from the exit point towards the rig area. The paved and/or vegetated surface of the disturbed pit area shall be restored according the Contract Documents.

G. At all times, adequate protection will be taken to avoid impacts to pavement, structures, and Aquatic Preserve/Outstanding Florida Waters and contiguous wetlands. This shall include, but is not limited to halting of construction/drilling and/or placement of turbidity containment devices in accordance with the applicable regulations.

H. A pump tanker or vactor truck shall be onsite and available at all times. The Contractor shall demonstrate the contracted availability of additional pump tankers and/or vactor trucks if needed for surplus or frac-out drilling fluids.

I. A spill kit (i.e., absorbent pads/brooms, shovels, goggles, gloves) shall be onsite and available at all times.

33.04 RELEASE PROCEDURE

A. If a frac-out is confirmed, all construction activity contributing to the frac-out shall cease immediately.

B. If the return drilling fluid is less than the projected amount to be recovered, divers shall begin a search for the missing material within 1 hour of potential release if the drilling takes place under a body of water. Once the drilling fluid and frac-out is located, then the drilling mud containment plan shall be immediately implemented.

C. The Contractor shall notify the City upon confirmation of the occurrence. The notification shall include the time of the frac-out, location and impact on pavement and improvements, and the environmental conditions of the impacted area.

D. If a frac-out has occurred during construction activities, the Contractor shall coordinate with the City in order to notify the USACE of Engineers, within 24 hours of the occurrence. The notification shall include the time of the frac-out, the response time of the underwater diver, and the environmental conditions of the affected area.

Docusign Envelope ID: AFCB16A4-B390-89EA-8013-04580053D90F

F. If the loss of drilling fluid or excess fluid pumping/recirculation pressure results in the heaving and/or settlement of pavement, curb, sidewalk and/or other infrastructure, the HDD Contractor shall immediately mobilize all equipment, manpower and devices to recover the drilling fluid, relieve the fluid pressure, stop any heaving or settlement of infrastructure and protect the public. The HDD Contractor shall prepare a remediation plan to repair, replace, or restore the affected infrastructure in accordance with the governing jurisdiction's standards, reviewed for approval prior to implementation.

G. Before continuing with the HDD operation, the HDD Contractor shall prepare and submit for approval a revised plan for successful completion of the required project. The plan shall identify the manpower, equipment, drilling fluid, additives, pump pressures, original bore hole sealing, and bore path modifications that may be required.

33.05 DRILLING MUD CONTAINMENT PLAN

A. Should the release of drilling materials occur on land, a sediment fence shall be constructed around the site and the material shall be removed by vacuum truck.

B. Should the release of drilling materials occur in-water, clean-up with a vacuum system shall commence within 24 hours.

C. The scientist/biologist underwater divers will guide the suction hose of the pump to minimize both the removal of natural bottom material and the disturbance of any existing vegetation.

D. Any escaped drilling lubricant must be pumped into filter bags or directly into a vactor truck.

E. A barge company will be contacted to transport a vactor truck should it be needed to respond "in-water."

F. Once the spill is contained, the escaped drilling lubricant shall be properly disposed of in an approved upland disposal site.

G. Clean-up with a vacuum system shall commence within 24 hours.

H. After containment/recovery of the drilling material/resources, the HDD Contractor shall prepare a detailed written report to be submitted to the City and USACE, within 10 business days, that summarizes the incident, including the following:

1. Details on the release event, including an estimate of the bentonite released;
2. The location and time of release;
3. The size of the area impacted, and the success of the clean-up action;
4. Name, firm, address and telephone number of HDD Contractor reporting;
5. Photos and/or digital recording of frac-out area and impacts;
6. Date and Time;
7. How the release occurred;
8. The type of activity that was occurring around the area of the inadvertent return;

Docusign Envelope ID: AFCB16A4-B390-89EA-8013-04580053D90F

9. Description of any sensitive areas and their location in relation to the inadvertent return;
10. Description of the methods used to clean up or secure the site;
11. Changes to the drilling fluid properties or drilling process (if any); and
12. Mitigation of any impacted public utility infrastructure and water bodies from the frac-out

END OF SECTION

Docusign Envelope ID: AFCB16A4-B390-89EA-8013-04580053D90F

SECTION 34 –MANHOLE INSPECTION

34.01 SCOPE OF SERVICES

A. The Contractor shall perform visual inspections of the existing manholes and record any defect discovered. The visual inspection shall include surface photo, manhole cover and frame, chimney, walls, invert, and all appurtenances.

B. The nature of the inspections shall be to verify the physical condition of the manhole and to provide a permanent record of the existing condition as it relates to dimensions, materials, obstructions, breakage, connections, and deterioration. Inspections may be performed by personnel entry or from the surface utilizing pole mounted camera equipment to visually inspect the chimney, cone, wall, bench, pipe seals and invert conditions, and conditions of connecting pipes.

C. All City assets will be identified using the established facility identification code (FID) for all inspection reports, geographical exhibits, data sets and asset management tasks. Assets may include, but not be limited to, manholes, clean outs, gravity mains, force mains, air release valves, and conflict structures. Asset FIDs will be provided to the Contractor prior to the start of inspection. Failure to utilize the FID could result in additional inspection at the Contractors expense.

34.02 REQUIREMENTS

A. The Contractor shall inspect the manhole surroundings and the manhole interior using visual means and a digital camera for documentation.

B. All inspections shall be recorded.

C. All inspection forms shall be scanned and submitted as .PDF files.

D. All inspection data shall be entered into a NASSCO Manhole Assessment Certification Program (MACP) compliant database per Specification Section 20 “CCTV Inspection and Pipe Cleaning”.

E. The inspection photographs, report documents, and inspection database shall be in accordance with the specifications and NASSCO MACP.

F. Contractor shall maintain a copy of all report materials. The Contractor shall provide comments as necessary to fully describe the existing condition of the manhole on the inspection forms.

G. Contractor shall be responsible for modifications to equipment and/or inspection procedures to achieve City report requirements.

Docusign Envelope ID: AFCB16A4-B390-89EA-8013-04580053D90F

H. No Work shall commence prior to approval of the submitted materials by the City. Once accepted, the report materials shall serve as a standard for the remaining work.

34.03 QUALITY ASSURANCE

A. Use of PACP/MACP certified technicians to review/document defects in the office (post process) is acceptable.

B. The CCTV Contractor must have an internal quality assurance/quality control (QA/QC) program in place and all inspection data shall be subjected to the procedures prior to submittal to the City. The City will perform QA/QC audits on submitted data.

A QA/QC shall be performed by NASSCO MACP and PACP certified personnel.

34.04 SHOP DRAWINGS AND SUBMITTALS

A. Submittals shall be submitted to the City for review and acceptance prior to construction in accordance with Specification Section 03 -Submittals.

B. The above deliverables shall be submitted to the City for approval.

C. The manhole inspection reports and database shall be in accordance with the specifications and NASSCO MACP.

34.05 NOTIFICATION

The Contractor shall notify the City a minimum of 48-hours prior to performing any inspection work. The City may be present during part or all of the inspections. No payment will be made for inspections performed without proper schedule notification

34.06 EXECUTION

A. The inspection crew shall mobilize to the site of the manhole inspection and immediately establish traffic control measures per City of St. Pete Beach and Florida Department of Transportation (FDOT) requirements as well as any measures required to protect pedestrians. The crew shall inspect each manhole and record required information.

B. All manhole structures shall be located. Metal detectors shall be used to locate buried manholes. Once a buried manhole has been located, it shall be marked with paint and/or flagging, if necessary. All pertinent information available shall be recorded including area photo, address, etc. Contractor shall notify the City weekly with a list of those manholes that could not be fully inspected due to access issues. The City may arrange to have some or all these manholes exposed, or otherwise

Docusign Envelope ID: AFCB16A4-B390-89EA-8013-04580053D90F

made accessible for full inspection. The City will notify Contractor of the status and may authorize re-inspection.

34.07 MANDATORY INSPECTION HEADER INFORMATION

Once the manhole is located, the following mandatory information shall be recorded on the inspection form. Note that the mandatory fields noted below are more inclusive than the MACP requirements. All available information shall be collected and recorded for those manholes that are buried, could not open, surcharged, etc.

1. Manhole Number (City of St. Pete Beach Asset Number)
2. Sheet number
3. Date
4. Time
5. Surveyor's Name
6. Certifications Number
7. Drainage area (tributary Pump Station Number)
8. Location (street number and name)
9. Downstream pipe length (feet)
10. Rim to grade (nearest 0.1 foot)
11. Pre-cleaning method (using approved MACP codes)
12. Location code (using approved MACP codes)
13. Manhole surface type (using approved MACP codes)
14. Potential for runoff (using approved MACP codes)
15. Access point type (using approved MACP codes)
16. Inspection status (using approved MACP codes)
17. Area photo image reference Internal photo image reference

34.08 MANHOLE COMPONENT OBSERVATIONS

The inspection crew shall complete all fields within the manhole component/observation section of the inspection form. The following information shall be collected:

1. Cover type (solid, vented, bolted)
2. Cover size (top surface diameter in inches)
3. Cover material
4. Number of vent holes
5. Cover/Frame fit (cover to frame fit, MACP codes)
6. Cover condition (MACP codes)
7. Cover insert type
8. Cover insert condition
9. Frame condition
10. Frame seal condition
11. Frame offset distance
12. Frame seal inflow
13. Wall material

Docusign Envelope ID: AFCB16A4-B390-89EA-8013-04580053D90F

14. Interior wall coating
15. Wall diameter
16. Bench present
17. Channel installed
18. Additional remarks relevant to the manhole

34.09 MANHOLE INTERIOR INSPECTION

The inspection crew shall determine the types of defects within the manhole, document each defect on the manhole form and take a photograph of each defect. The manhole chimney, cone, wall, bench, and channel shall be inspected for structural integrity, signs of I/I and the presence of roots. All documentation shall follow NASSCO MACP standards. Each defect will be documented on the inspection form with the following information:

1. Defect number
2. Component of manhole containing defect
3. Defect code (using approved MACP codes)
4. Image Reference (using City approved file naming structure)

34.10 CONNECTING PIPE DETAILS

Each pipe entering and exiting the manhole shall be photographed where possible and inspected to determine diameter, pipe material, debris levels, and rim to invert distance (to 0.1-feet). The pipe inspection will include the following information:

1. Pipe photo (using City approved file naming structure)
2. Pipe direction (incoming or outgoing)
3. Pipe clock positions (6:00 position = outgoing)
4. Pipe diameter
5. Pipe material (using PACP codes)
6. Rim to invert distance (measured to nearest 1/10th of a foot)
7. Pipe special condition (drops, force mains, etc. using approved MACP codes)
8. Debris depth
9. Connecting structure number; if manhole or cleanout, service line clock position, stub-out clock position, etc.
10. Pipe seal condition (using approved MACP codes)
11. Pipe seal roots (using approved MACP codes)
12. Observed pipe defects, obstructions, roots, etc. (using PACP codes)

34.11 MANHOLE SKETCH, MAP UPDATE, AND NOTES

The inspection crew shall complete the manhole plan view sketch noting all connecting pipes. Any special observations or notes may be added to the profile sketch on the field form. Influent and effluent lines in each manhole shall be compared to the existing map and corrections noted in the sketch section of the field form.

Docusign Envelope ID: AFCB16A4-B390-89EA-8013-04580053D90F

34.12 NOTIFICATION OF EMERGENCY CONDITIONS

Inspection crews shall immediately notify the City and/or on-site inspector of any defects posing imminent danger to the public (missing lids, covers broken during inspection, sink holes, etc.) and any observed pipe blockages or potential overflow conditions.

34.13 COMPLETION

Once the inspection is complete the field crew shall make certain the ring is clean and does not have any debris preventing a proper cover fit. The manhole lid shall be replaced, and any displaced items moved back into place.

A list of manholes that could not be fully inspected, along with the problem explanation, shall be forwarded to the City weekly throughout the inspection work. If the Contractor has completed accessible inspections, and the City authorizes, then Contractor may be required to re-mobilize at the same unit price and complete the requested inspections. All re-inspections will be at the same contracted unit price. Any map updates shall be consolidated and forwarded to the City with the submitted inspections.

34.14 PHOTOGRAPH REQUIREMENTS

A. During each inspection the following series of photographs shall be taken:

1. Photograph: During the inspection, a photograph shall be taken of the manhole cover showing location within the roadway, shoulder, or easement as appropriate. Photographs shall be taken of any indications of previous overflows such as watermarks and paper or other debris typical of sewer overflows. Surface photographs shall be oriented in the direction of the outgoing pipe to show the pipeline cover and easement condition. The area photographs should show the manhole visible in the foreground where possible. A minimum of 1 area photo is required.
2. Internal Photograph: Take a photograph of the manhole interior in plan view showing the general arrangement of the incoming and outgoing sewers, manhole walls, and other appurtenances. The internal condition photograph shall be oriented with the direction of the outgoing main line flow at the bottom of the photograph (6:00 position). A minimum of 1 internal photograph is required.
3. Manhole Defect Photographs: During manhole inspections digital photographs shall be taken of all defects. Photographs must clearly and accurately show each defect and correspond to defects and photo numbers logged on the manhole inspection form. A minimum of 1 photo for each observed defect is required
4. Connecting Pipe Photographs: The camera should then be pointed into all incoming and outgoing pipes where possible to capture general conditions within the pipes. Any obvious blockages or defects should be noted using

Docusign Envelope ID: AFCB16A4-B390-89EA-8013-04580053D90F

PACP defect codes. A minimum of 1 photo of each incoming or outgoing pipe is required.

B. During inspections manholes shall be free of steam, fog, water vapor, or other conditions that will impact the quality of photographs.

C. All photographs shall adequately capture the manhole conditions and details of defects. Lighting and camera quality shall provide a clear, in-focus picture of the manhole interior, manhole defects, and manhole. The lighting shall provide uniform light free from shadows or hot spots.

D. If larger than 640 x 480 resolution, then photo will be converted to 640 x 480. Photos less than 640 x 480 are not acceptable and converting upward to 640 x 480 is not acceptable. All photographs shall be resized to 640 x 480 resolution to minimize file size.

E. The images shall be kept electronically, copied to a CD, DVD, or external hard drive. Photographs shall be named according to the photograph naming conventions included herein.

F. All digital photographs shall be referenced on the manhole inspection form and electronic database.

G. All digital photographs shall be renamed in accordance with a photo file naming convention. An example is shown below:

1. Area Photo = Manhole ID, A, Photo Number, jpg
   Example: 3965002A0001.jpg
   Manhole: 39650002
   A=Area Photo
   Photo No.0001
2. Internal Photo = Manhole ID, I, Photo Number, jpg
   Example: 3965002I0001.jpg
   Manhole: 3965002
   I=Internal Photo
   Photo No.0001
3. Manhole Defect Photo = Manhole ID, M, Photo Number, jpg
   Example: 3965002M0015
   Manhole: 3965002
   M=Manhole Defect Photo
   Photo No. 0015
4. Pipe Photo = Manhole ID, P, Photo Number, jpg
   Example: 3965002P0002.jpg
   Manhole: 3965002
   P=Pipe Photo
   Photo No. 0002

Docusign Envelope ID: AFCB16A4-B390-89EA-8013-04580053D90F

34.15 MANHOLE NUMBERING, FORMS, AND DEFECT CODES

The Contractor shall use the City manhole numbering system when performing the inspections for this Project. Manhole numbers will be provided by the City. Defect codes shall conform to those specified in the NASSCO MACP specification.

All City assets will be identified using the established facility identification code (FID) for all inspection reports, geographical exhibits, data sets and asset management tasks. Assets may include, but not be limited to, manholes, clean outs, gravity mains, force mains, air release valves, and conflict structures. Asset FIDs will be provided to the Contractor prior to the start of inspection. Failure to utilize the FID could result in additional inspection at the Contractors expense.

34.16 SITE RESTORATION

After inspecting manholes in an area, the work site shall be cleaned and restored to pre-Work conditions. If manhole is buried and exposed, then restore site by placing material back over exposed manhole. No re-sodding is anticipated or included in the pricing.

34.17 DELIVERABLES

The Contractor will be required to submit the following deliverables at the completion of inspection.

A. During each inspection the following series of photographs shall be taken:
   1. Inspection session header information (see required fields above)
   2. Component observations
   3. Manhole inspection details including defects observed and photo image references
   4. Connecting pipe details
   5. Manhole plan view sketch

B. Marked up field maps detailing map corrections and/or discrepancies noted during inspection.

C. Inspection digital photograph in City approved format and resolution and assigned file names in accordance with the City standard during each inspection the following series of photographs shall be taken.

D. All information and reports shall be exported to the electronic database described in technical specification Section 34.02.

END OF SECTION

Docusign Envelope ID: AFCB16A4-B390-89EA-8013-04580053D90F

THIS PAGE INTENTIONALLY LEFT BLANK

Docusign Envelope ID: AFCB16A4-B390-89EA-8013-04580053D90F

SECTION 35 – CHEMICAL SEALING OF HOST PIPE AND SERVICE CONENCTIONS

35.01 GENERAL

The Work in this section includes furnishing all labor, materials, tools, and equipment for reducing infiltration within the host pipe and service connections to an acceptable level prior to liner installation to ensure that placement and curing is not adversely affected by the presence of excessive infiltration and seal annular space between liners and host pipes at service lateral connections. Accordingly, the Engineer will base acceptance of this portion of the Work on the reduction of infiltration at host pipe joints and other defects to a level that will insure completion liner installation in accordance with these specifications.

Contractor shall furnish all labor, materials, equipment, and incidentals to seal active infiltration at host pipe joints, service lateral connections, and other defects as directed. Sealing shall be from inside the host pipe using a device equipped with a pan and tilt camera and inflatable packer as described herein.

35.02 PRODUCTS

A. Sealing Materials

1. The sealing compound shall be Acrylic base gel -Avanti AV-100, AV-1 18, Urethane base gel — Avanti AV-350 or Acrylate base gel- Deneff AC-400 or approved equal and shall be suitable for use in domestic wastewater collection systems. Handling, formulation and storage of the sealing gel compound shall be in strict conformance with the manufacturer's recommendations. The uncured gel shall be delivered to the site in unopened containers, with the date of manufacture clearly indicated, no uncured gel manufactured more than six months prior to the date of application shall be utilized. Residual sealing materials shall be removed from the wastewater collection system after injection to ensure no flow reductions, restriction or blockage occur.

2. Icoset additive shall be added to the sealing compound for gel strengthening. The quantity of Icoset additive will be according to the manufacturer recommendation. The sealing compound admixture shall be adjusted to meet specified viscosity and reaction time.

35.03 SUBMITTALS

A. The Contractor shall submit the following to the Engineer in accordance with Specification Section 03 - Submittals

1. Gel compounds
2. Installation equipment

Docusign Envelope ID: AFCB16A4-B390-89EA-8013-04580053D90F

35.04 EQUIPMENT

A. General

1. Sealing equipment shall consist of two separate pumping systems capable of supplying an uninterrupted flow of sealing materials to completely fill the voids. Pumps, fittings and hoses shall be designed to transport a high viscosity material and shall not be affected by acetone or ketone solvents.

2. Sealing materials shall pass from the pumping system through instant reading, controlled flow meters and then through a dual hose system into the sealing device. The device (referred to hereafter as a packer) shall be a cylindrical case of a size less than pipe size, with the cables at either and used to pull it through the host pipe.

3. Generally, the equipment shall be capable of performing the specified operations in pipes where flows do not exceed 25 percent without resorting to any method of flow control.

4. Air impervious inflatable sleeves shall be mounted over the cylinder with the ends of the sleeve sealed to the ends of the casting. The sleeves shall be so constructed that they can be pneumatically expanded from the center to both ends. The center portion of the sleeve shall be sealed to the casing by a broad confining band. When the packer is inflated. Two widely spaced annular bladders shall be formed, each having an elongated shape and producing an annular void around the confined portion of the sleeve. No sealing device which is expanded mechanically nor where the expansion sleeve is not continuous will be allowed in order to prevent damage to the pipe from excessive amounts of sealing pressures or air leakage in the center area of such sealing device. The sleeve shall be a low void packer.

5. Lateral service sealing is accomplished with a "Logiball" lateral packer. The objective of the lateral service packer is to seal the lateral service connection to the main pipe and the first 18-inches of the service lateral.

35.05 EXECUTION

A. General

Sealing shall be by the pressure grout method. Generally, this shall be accomplished by forcing chemical sealing gel materials through a system of pumps and hoses into and through the joints and other defects of the host or lateral pipe from the packer within the pipe. Jetting or driving pipes from the surface that could damage or cause undermining of the wastewater system shall not be allowed.

B. Grout Mixing

1. The Contractor shall mix all grout at the job site in the presence of the Engineer. No grout will be used on the job which has been mixed off site and is in the Contractor’s

Docusign Envelope ID: AFCB16A4-B390-89EA-8013-04580053D90F

tank when the truck drives on site. The Contractor's personnel shall follow the manufacturer's recommendations for the mixing and safety procedures to protect personnel from any adverse effects of the grouting compounds. Powder and additives shall be added and mixed at rates, which will minimize the formation of lumps within grout tanks solutions. All additives will be thoroughly mixed in the grouting component tanks.

2. Prior to application of grout for seal purposes. a pump test will be performed to determine if equal quantities of grout are being pumped from the grout component tanks. Separate containers shall be used to capture the discharges from the grout component tanks. One gallon of grout shall be pumped, and the pump strokes shall be counted. If unequal quantities are being pumped, the Contractor shall take corrective action. The pump test shall be repeated until equal quantities are pumped from the grout tanks.

3. During the grouting process, the Contractor shall monitor the grout component tanks to make sure that equal quantities are being pumped. If unequal levels are noted in the tanks. the pump test shall be repeated as described above. At the beginning of each day, when new batches of grout are mixed and when grout additives are modified to change gel times, a test shall be performed with quantities of grout to determine the grout mixture gel time. The Contractor shall have accurate scale(s) which shall be used to weigh the various non water grout solution components.

C. Host Pipe Sealing by Pressure Grout Method

1. The packer shall be positioned over the area of infiltration by means of a measuring device at the surface and the closed circuit television camera in the pipe. Accurate measurement of the location of the defect to be sealed shall be made, using a portion of the packer as a "Datum" of measurement point or target. Such measurement, target or point shall also be used to obtain necessary measurement for positioning injection area of packer over the area to be sealed.

2. The packer sleeves shall then be pneumatically expanded and shall seal against the inside periphery of the pipe to form a void area at the joint or defect now completely isolated from the remainder of the pipe segment.

3. Into this isolated area sealant materials shall be pumped through the hose system at controlled pressures, which are in excess of groundwater pressures. The pumping, metering and packer shall be integrated so that proportions and quantities of materials and pressures for materials and sealing gel can be instantly monitored and regulated in accordance with the type and size of the leak, percentage of voids being filled, type of soil surrounding the pipe and the rate of flow of the sealing gel solution in relation to the back pressures. These parameters should follow the manufacturer's specifications and guidelines.

4. Upon completion of the injection, the television camera shall be moved to a position to observe and inspect the results of the injection. If inspection shows the seal was

Docusign Envelope ID: AFCB16A4-B390-89EA-8013-04580053D90F

not effective, the process shall be repeated until infiltration has been reduced to an acceptable level for liner installation.

5. The packer shall be moved forward, wiping away the excess grout. The excess sealing material removed from the joint by the grouting equipment shall be flushed or pushed forward to the next downstream manhole, removed from the wastewater system and disposed of by the Contractor as specified by disposal of debris resulting from cleaning operations. in no case shall excess grout material be allowed to accumulate and be flushed down the system.

6. it is intended that chemical sealing shall be performed on host pipe immediately prior to the installation of the liner unless otherwise authorized by the Engineer. The Contractor shall notify the City Inspector a minimum of 48 hours prior to commencing Chemical sealing operation. The quantity of grout used shall be verified by the City Inspector.

7. Any part of the wastewater system damaged as a result of the Contractor's operations shall be promptly repaired by, and at the expense of, the Contractor.

8. All activities shall be video inspected during the sealing operation. The video shall be submitted to the Engineer for review and for permanent record. The video inspection shall comply with the requirements of the Technical Specification Section headed "Closed Circuit Television Inspection".

D. Lateral Service Sealing by Pressure Grout Method

1. Air testing laterals shall be accomplished by isolating the area to be tested with the lateral service packer and by applying positive pressure into the isolated void area. A pan and tilt camera shall be used prior to positioning the lateral packer. A sensing unit shall be used for continuous monitoring of the void pressure. This sensing unit shall be located within the void area and will accurately transmit continuous pressure readout to the control panel.

2. Joint testing and grouting for laterals will utilize a "Logiball" type system. The packer ends (end elements, sleeves) shall be expanded using controlled air pressure. The expanded ends shall seal against the inside periphery of the pipe to form a void area at the lateral, now completely isolated from the remainder of the pipe segment. Into this isolated area, sealant materials shall be pumped through the hose system at controlled pressures that are in excess of groundwater pressures. The pressure device shall accurately show psi to the nearest one tenth (0.1) pound and shall instantly respond to and record any change in the void pressure. The joint shall be tested with a gauge pressure of one-half psi per foot of depth of lateral pipe as measured by the deeper of the two manholes between which the lateral is located, or a minimum of 4 psi, whichever is larger. The pumping unit, metering equipment, and the packer device shall be designated so that proportions and quantities of materials can be regulated in accordance with the type and size of the leak being tested or sealed, percentage of voids being filled, type of soil surrounding the pipe and the rate of flow of the sealing gel solution in relation to the back pressures.

Docusign Envelope ID: AFCB16A4-B390-89EA-8013-04580053D90F

These parameters should follow the manufacturer's specifications and guidelines and be reviewed with the Engineer prior to the beginning of any grouting activities.

3. The test procedure will consist of applying air pressure into each isolated void area. To isolate a void, a lateral sealing packer shall be positioned straddling the lateral. The operator shall insert an inflatable inversion tube and inflate the packer ends to isolate the lateral. Once the designated pressure in the isolated void is displayed on the meter of the control panel, the application of air pressure will be stopped and a thirty-second waiting period will commence. The void pressure will be observed during this period. If the void pressure drop is greater than that allowed in the following Air Test Table, the lateral shall be considered to have failed the air test and shall be grouted as specified herein.

Air Test Table

Initial Void Pressure (psi)	Void Pressure After 30 Seconds
12-11	4.8-4.4
11-10	4.4-4.0
10-8	4.0-3.6
9-8	3.6-3.2
8-7	3.2-2.8
7-8	2.8-2.4
6-5	2.4-2.0

4. After completing the air test for each individual lateral specified herein, the lateral packer shall be deflated, with the void pressure meter continuing to display void pressure. If the void pressure does not drop to approximately zero, the equipment shall be adjusted to provide a zero void pressure reading at the monitor.

5. An air pre-test is not required for lateral sealing of service connections in main pipes that have been lined, as lateral sealing is required regardless of air test results. Pre and post-tests, and quantity of grout pumped shall be logged.

6. lateral sealing begins if the lateral does not pass the air test as described above. The lateral packer shall remain in position, thus maintaining the isolated void. Chemical grout sealant will be pressure injected through the lateral packer into the annular space between the inversion tube and the lateral pipe. Under pressure, the grout material shall be then forced out into the soil through leaking joints and pipe defects. The amount of chemical grout pumped is based on the number of pump strokes delivered to each lateral. The number shall be recorded on the sealing log.

7. Upon completion of the lateral sealing procedure, the lateral shall be air tested to verify the sealing of the connection. The air test will be the same as outlined above. If the sealed lateral fails the air test, the grouting procedure shall be repeated at no additional cost to the City. This sequence of air testing, grouting and subsequent air testing shall be repeated until either the lateral is sealed or it is determined that the grout consumption is too high and may result in the blockage of the lateral pipe. The final determination to stop subsequent attempts to seal a lateral will be made jointly

Docusign Envelope ID: AFCB16A4-B390-89EA-8013-04580053D90F

between the Engineer and the Contractor.

8. The Contractor shall verify lateral flow after the successful sealing of each lateral. With the lateral packer in position, the inversion tube shall be retracted and air pressure injected into the lateral. Should a pressure build in the lateral and not drop to zero in a few seconds, the packer will be moved off the connection and the connection shall be viewed with a television camera. With the camera viewing the connection point, an attempt will be made to obtain a water flush by the occupant. If no water is viewed during this procedure, it shall be assumed that the building service connection is blocked with grout and the responsibility to clear the lateral will be the Contractor's at no additional cost to the City.

9. The Contractor shall attach a notification form to the door of each home or building for which laterals have been grouted. This notification to the occupant shall state the following:

   The lateral service connection to (address) _____was grouted on (date) _____

   If any blockage of wastewater flow occurs, please call (emergency number)

   Any blockages that occur as a result of the lateral sealing operations will be cleared by the Contractor.

10. All activities shall be video inspected during both the air testing and sealing operation. The video shall be submitted to the Engineer for review and for permanent record. The video shall display at a minimum the date, manhole numbers, footage to the lateral, and void pressure readout. In addition, the data obtained during this operation shall be recorded on a lateral testing and sealing log provided by the Contractor. The log shall specify conditions of each service lateral sealed, break-in-service connection, lined pipe, etc.

E. Cleanup

Residual sealing materials that extend into the pipe, reduce the pipe diameter, or restrict the flow shall be removed and disposed of by the Contractor at an approved site. Sealed joints shall be left reasonably “flush” with the existing pipe surface. Excessive residual sealing materials in the system shall be cleaned to remove the residual materials.

F. Disposal

Furnish equipment for collection of cleaning solvents used in the cleaning of the sealing equipment. Collected solvents shall be disposed of by an approved solvent recovery process. Disposal of cleaning solvents into the wastewater system or into natural watercourses will be strictly prohibited.

Docusign Envelope ID: AFCB16A4-B390-89EA-8013-04580053D90F

G. Wastewater Flow Controls

When wastewater flows are above the minimum requirements or inspection of the complete periphery of the pipe is necessary to effectively conduct the inspection and sealing operations, one or more of the following methods of flow control shall be used.

1. A plug shall be inserted into the pipe at a manhole upstream from the section to be inspected and/or sealed. The plug shall be so designed that all or any portion of the wastewater flows can be released. During the inspection portion of the operation, flows shall be shutoff or substantially reduced in order to properly inspect the pipe at the invert. After the inspection is complete, flows shall be restored to normal or not more than 1/4 of the pipe diameter during the sealing operation. The Contractor will be responsible for preventing backups and overflows.

2. Where pumping is required, in the opinion of the Engineer, to assure completion of the inspection and sealing work, the Contractor will be required to furnish pumping and bypassing equipment. Refer to the requirements of Specification Section 16 ”Bypass Pumping” or Specification Section 01 "General”.

END OF SECTION

Docusign Envelope ID: AFCB16A4-B390-89EA-8013-04580053D90F

THIS PAGE INTENTIONALLY LEFT BLANK

Docusign Envelope ID: AFCB16A4-B390-89EA-8013-04580053D90F

SECTION 36 – REMOVAL OF PROTRUDING SERVICE CONNECTIONS

36.01 GENERAL

The Work in this section includes furnishing all labor, materials, tools, and equipment for internally removing and sealing protruding service connection taps and excess mortar in wastewater pipe segments scheduled to be rehabilitated.

Remove only those taps that protrude sufficiently as specified herein which are determined to interfere with the pipe rehabilitation. The intent is to remove the minimum number of protruding taps necessary to allow the entire pipe segment to be rehabilitated.

The Contractor shall maintain wastewater flows, including pump around pumping, as required at all times during the performance of this work.

The Contractor shall remove all dirt and debris caused by tap removal. Excess material will not be allowed to enter the wastewater system and carried to downstream reaches.

The Contractor is advised that this Contract requires work in active wastewater collection systems and shall follow all federal, state and local requirements for safety in confined spaces. The Contractor shall conform to all guidelines by the Occupational Safety and Health Administration (OSHA) Federal Regulations; 29 CR Ch. XVII, Section 1910.146 Confined Space Entry.

36.02 PRODUCTS

A. Equipment

1. Protruding taps shall be removed using an internal, remote-controlled intruding pipe remover. Excavation and replacement of protruding taps will not be allowed except under special situations authorized in writing by the Engineer.
2. The equipment shall consist of a main body containing a rotating head assembly equipped with carbide cutting edges. The rotating cutting head shall be driven by air or by electricity and shall be capable of cutting concrete, vitrified clay pipe or other materials commonly used for pipe construction with the exception of cast iron or steel.
3. The equipment shall be self-propelled or pulled through the pipe using winches and a cable set up between adjacent manholes.
4. The equipment shall be positioned using a TV camera in conjunction with the cutter assembly.

36.03 EXECUTION

A. Performance

1. The Contractor shall remove all service taps specified herein that inhibit pipe segment rehabilitation methods. The Contractor is required to remove protruding

Docusign Envelope ID: AFCB16A4-B390-89EA-8013-04580053D90F

taps to the point where they are flush with the inside wall of the pipe.

2. The Contractor shall maintain a complete record of all taps that were removed and furnish two (2) copies of this record at the completion of this work.
    a. The list shall show the Work Order Number, date, street, and pipe segment (by manhole numbers), station and location (left, right and top) of each tap removed.
    b. The list shall also show similar data for any taps that were not successfully removed, as well as the reason why removal was unsuccessful.
3. The Contractor shall protect existing main pipe and service laterals from damage caused by improper use of the equipment. Damage to a main pipe or service lateral caused by removal of a tap shall be repaired immediately, as directed by the Engineer, at the Contractor's expense. Any increase in infiltration at the service connection caused by the Contractor's removal of the protruding tap shall be chemically sealed by the Contractor at no additional cost to the City, in accordance with the Technical Specification Section headed "Chemical Sealing of Service Connections".
4. The Contractor shall remove all dirt and debris from the wastewater system following completion of tap removal.

B. Inspection

1. Contractor shall televise protruding service connection tap prior to removal, recording location and footage to service connection. Following successful completion of removal, Contractor shall perform post-construction television inspection.
2. Post-cleaning and post-rehabilitation television inspections shall be recorded on the same video as specified in the Technical Specifications Section headed "Closed Circuit Television Inspection." Video and data shall be submitted to the Engineer. Video and data shall become the property of the City.

END OF SECTION

Docusign Envelope ID: AFCB16A4-B390-89EA-8013-04580053D90F

SECTION 37 – WASTEWATER STRUCTURE REHABILITATION

37.01 GENERAL

The Work in this section includes furnishing and installing wastewater structure components and coatings for rehabilitation, structural enhancement, and corrosion protection of existing wastewater manholes, for the various diameters listed on the Bid Form. Wastewater structures include, but are not limited to, manholes, vaults, junctions, and wet wells.

The Contractor shall furnish all materials, labor, equipment, and services necessary for wastewater manhole component replacement and coating installation including: traffic control, bypass pumping and/or diversion of wastewater flows, void repair, inflow/infiltration elimination, surface preparation, structure component and coating installation, testing, surface restoration, and cleanup of the Work site.

37.02 GOVERNING STANDARDS

The following Standards are referenced in this section:

ASTM	C 109	"Standard Test Method for Compressive Strength of Hydraulic Cement Mortars"
ASTM	C 157	"Standard Test Method for Length Change of Hardened Hydraulic-Cement, Mortar, and Concrete"
ASTM	C 293	"Standard Test Method for Flexural Strength of Concrete (Using Simple Beam With Center-Point Loading)"
ASTM	C 307	"Standard Test Method for Tensile Strength of Chemical-Resistant Mortar, Grouts, and Monolithic Surfacing"
ASTM	C 308 Modified	"Standard Test Method for Working, Initial Setting, and Service Strength Setting Times of Chemical-Resistant Resin Mortars"
ASTM	C 309	"Standard Specification for Liquid Membrane-Forming Compounds for Curing Concrete"
ASTM	C 321	"Standard Test Method for Bond Strength of Chemical-Resistant Mortars"
ASTM	C 496	"Standard Test Method for Splitting Tensile Strength of Cylindrical Concrete Specimens"
ASTM	C 531	"Standard Test Method for Linear Shrinkage and Coefficient of Thermal Expansion of Chemical-Resistant Mortars, Grouts, Monolithic Surfacing, and Polymer Concretes"

Docusign Envelope ID: AFCB16A4-B390-89EA-8013-04580053D90F

ASTM	C 579	"Standard Test Methods for Compressive Strength of Chemical-Resistant Mortars, Grouts, Monolithic Surfacing and Polymer Concretes"
ASTM	C 596	"Standard Test Method for Drying Shrinkage of Mortar Containing Hydraulic Cement"
ASTM	C 580	"Standard Test Method for Flexural Strength and Modulus of Elasticity of Chemical-Resistant Mortars, Grouts, Monolithic Surfacing, and Polymer Concretes"
ASTM	C 666	"Standard Test Method for Resistance of Concrete to Rapid Freezing and Thawing"
ASTM	C 882	"Standard Test Method for Bond Strength of Epoxy-Resin Systems Used With Concrete By Slant Shear"
ASTM	C 905	"Standard Test Methods for Apparent Density of Chemical-Resistant Mortars, Grouts, Monolithic Surfacing, and Polymer Concretes"
ASTM	D 543	"Resistance of Plastics to Chemical Reagents"
ASTM	D 638	"Tensile Properties of Plastics"
ASTM	D 695	"Compressive Properties of Rigid Plastics"
ASTM	D 790	"Flexural Properties of Unreinforced and Reinforced Plastics"
ASTM	D 1622	"Standard Test Method for Apparent Density of Rigid Cellular Plastics"
ASTM	D 1623	"Standard Test Method for Tensile And Tensile Adhesion Properties of Rigid Cellular Plastics"
ASTM	D 2126	"Standard Test Method for Response of Rigid Cellular Plastics to Thermal and Humid Aging"
ASTM	D 2584	"Volatile Matter Content"
ASTM	D 2842	Standard Test Method for Water Absorption of Rigid Cellular Plastics"
ASTM	D 3846	"Standard Test Method for In-Plane Shear Strength of Reinforced Plastics"

Docusign Envelope ID: AFCB16A4-B390-89EA-8013-04580053D90F

ASTM	D 4258	"Standard Practice for Surface Cleaning Concrete for Coating"
ASTM	D 4259	"Standard Practice for Abrading Concrete"
ASTM	D 4541	"Standard Test Method for Pull-Off Strength of Coatings Using Portable Adhesion Testers"
ASTM	D 4787	"Standard Practice for Continuity Verification of Liquid or Sheet Linings Applied to Concrete Substrates"
ACI	503	"Use of Epoxy Compounds with Concrete"
SSPC/ NACE	SP-13/ NACE 6	"Surface Preparation of Concrete"

37.03 DEFINITIONS

A. Coating Systems: includes surface description, surface preparation, required dry film thickness, and the number and application procedure of the prime and finish coatings. Systems are defined and identified in the article headed "Coating System Specification Sheets" in this Section of the Technical Specifications.

B. Field Coating: the application of the coating system in an existing manhole or structure.

C. Dry Film Thickness (DFT): the thickness of a fully cured coating or coating system.

D Wet Film Thickness (WFT): the thickness of a coating while wet.

E. Volatile Organic Content (VOC): the portion of a coating that is a compound of carbon, is photo chemically reactive, and evaporates during drying or curing, expressed in g/L or lbs/gal as defined in ASTM D3960.

F. Solvents: Those chemicals used to dilute the liquid coating either for thinning the coating or for cleanup.

G. Lead Containing: any coating that contains any detectable amount of lead.

H. Hard To Reach: areas that may not be accessible with spray equipment but can be reached by brush, mitt, or roller.

I. Inaccessible Areas: areas such as back-to-back angles, skip welds, and other areas that a brush, mitt, or roller cannot contact the surface.

Docusign Envelope ID: AFCB16A4-B390-89EA-8013-04580053D90F

J. Manhole Floor: the bench, channel and invert of the manhole containing the concrete/brick floor of a manhole generally shaped as a fillet to direct incoming flows to the outlet piping and to minimize solids buildup, the wall/bench joint, the shaped flow-ways within the bench, the bench/channel joint, and the invert which is the line of the lowest elevation along the bottom of the channel(s).

K. Manhole Wall: that part of the manhole extending from the bench/wall joint to the bottom of the cone/corbel.

L: Manhole Cone/Corbel: the reducing section which tapers concentrically or eccentrically from the top wall joint to the bottom of the chimney or the ring (frame) casting where there is no chimney.

M. Manhole Chimney: the narrow vertical section built from brick or concrete adjusting rings extending from the top of the cone/corbel to the bottom of the frame casting.

N. Leaks/ infiltration: presence of water, or indications of water, inside the manhole caused by subsurface water entering the manhole from the exterior through cracks, fractures, holes, broken seals, or other means.

O. Inflow: surface water generally entering into a manhole through or under the manhole cover, frame, frame seal, chimney wall, or at the cone/corbel chimney joint.

P. Void: as defined in ACI.

Q. pH: a measure of acidity and alkalinity.

R. Bug Holes: small regular or irregular cavities, not exceeding 15rnm in diameter, resulting from the entrapment of air bubbles of formed concrete during placement and compaction. Re-rounding shall not be permitted.

37.04 QUALIFICATIONS

A. The Contractor shall be certified and/or licensed by the coating system manufacturer(s) as an approved Applicator for the products referenced in this section.

B. The Applicator shall be the person responsible for the actual work, either as the foreman or the person actually applying the coating system.

37.05 SUBMITTALS

The Contractor shall submit the following to the Engineer

A. List of materials including coatings, repair materials, grouts, and blasting abrasive material proposed for use.

B. List of equipment and certification by the individual coating manufacturer that the application equipment is sufficient to adequately apply the coating.

Docusign Envelope ID: AFCB16A4-B390-89EA-8013-04580053D90F

C. For each coating system, provide the manufacturer's application guidelines including:
   1. Surface preparation guidelines.
   2. Primer type, where required.
   3. Maximum wet and dry thickness per coat.
   4. Minimum and maximum curing time between coats, and atmospheric conditions for each.
   5. Curing time before submergence in municipal wastewater.
   6. Thinner to be used with each coating.
   7. Ventilator requirements.
   8. Allowable application methods.
   9. Maximum storage life.
   10. Material safety data sheets.
   11 . Interpretation of batch code numbers.
   12. Minimum and maximum relative humidity requirements.
   13. Minimum and maximum surface temperature requirements.
   14. Minimum and maximum ambient temperature requirements.
   15. Manufacturer's recommended application procedure.

D. Shop Drawings for frame and cover castings.

E. Product Data for manhole cover inserts.

F. Provide information on planned surface preparation procedures including, when relevant. abrasive media, minimum water cleaning pressure and flow rate (e.g. 5000 psig @ 4 gpm) • nozzle types (e.g. zero degree rotating nozzle), etc. for coating systems specified. Surface preparation methods shall be based upon the conditions of the substrate and the requirements of the protective coating to be applied. Whichever method(s) are used, they shall be performed in a manner that provides a uniform, sound, clean neutralized surface. At the request of the Engineer, the Contractor shall test for adverse chemical conditions that may hinder overall product performance.

G. Maintenance of Traffic Plan including, but not limited to, specific dates that the Maintenance of Traffic Plan shall be in place.

H. Wastewater Bypass Pumping plan, where required.

I. List of all test equipment to be used, copies of the adhesive and equipment's instructions, adhesives, calibration procedures, MSDS sheets, and copies of all reference standards related to the test equipment.

37.06 QUALITY ASSURANCE/ QUALITY CONTROL

A. General
   1. Deviations from the manufacturer's printed instructions will not be allowed unless approved in writing by the Engineer.
   2. In the event of a discrepancy between the Contractor's, manufacturer's or City Inspector's testing equipment, all parties shall check equipment in question for proper function and calibration.

Docusign Envelope ID: AFCB16A4-B390-89EA-8013-04580053D90F

3. Where there is a conflict between the manufacturer's recommendations and these Technical Specifications, the manufacturer's recommendations shall govern.
4. Test equipment and procedures shall be the same throughout the Contract.
5. Quality Control: Contractor shall be responsible for the quality control of the coatings applied including surface preparation, testing, verifying access, dimensions, configuration, pipe connections, appurtenances, and details of each manhole prior to commencing any Work as well as remedial work to be completed as identified by inspection at the given check points.
6. Quality Assurance: City Inspector shall approve the Contractor's Work regarding surface preparation and quality control of the coatings applied. This documentation in no way relieves the Contractor of the responsibilities described under this Contract. The City Inspector may conduct tests on ambient conditions, pH and surface temperature, coating(s) applied, wet and dry film thickness, coating type coating batch numbers, and other tests.

B. QA/QC Check Points

1. pH Testing: Prior to surface preparation for cementitious coating application, measure and record pH of the manhole interior surface and other parameters as required by coating manufacturer to verify acceptable existing substrate conditions for application of the specified product and to document compliance with warranty requirements. After surface preparation and prior to coating system being applied to the interior of a manhole (excluding coatings to only the interior of a chimney), measure and record pH of the manhole interior surface in at least two locations as approved by the City Inspector. Adjust if required by the coating system manufacturer and per NACE 6/SSPC SP 13 Table 1 for severe service.
2. Concrete surface tensile strength: After surface preparation (including repair and resurfacing products) and prior to a polymer coating system being applied to the interior of a manhole (excluding coatings to only the interior of a chimney and spot type only repairs) measure and record the results of a minimum of two concrete surface tensile strength tests, without glue failures, per manhole at locations as directed by the City Inspector. Tests shall be per ASTM D4541 as modified herein. Utilize a 20 mm test dolly and portable pull-off adhesion tester. Document test failure mode. Failure of the dolly adhesive shall require retesting. If the concrete surface tensile strength is less than 200 psi (NACE 6/SSPC SP 13 Table 1 for light service) notify manufacturer and Engineer for approval before applying coating. (Destructive testing as defined herein shall be performed on the initial manhole coated with a particular coating system. After the initial test. 10% of the manholes coated may require testing as selected by the Engineer. Initial and additional testing required due to test failures shall be at the Contractor's expense.)
3. Wet Film Thickness (WFT): During coating system application, measure and record WFT of the coating in at least four locations in the manhole (one in a chimney) or as directed by the City Inspector. Use an industry standard WFT gage (ASTM D4414) designed for thick coatings. Minimum W FT thickness is specified for each product in the article headed "Coating System Specification Sheets" in this Section of the Technical Specifications.
4. Surface Moisture: After preliminary surface preparation and prior to a polymer coating system being applied to the interior of a manhole, measure and record surface moisture of the manhole interior surface in at least two locations per ASTM

Docusign Envelope ID: AFCB16A4-B390-89EA-8013-04580053D90F

D426 and use a DELMHORST ACCUSCAN moisture meter using a 0 to 100 relative scale.

5. Blotter Test: Upon start up of abrasive blasting, compressed air shall be checked daily for oil and water by blotter test per ASTM D4285.
6. Anchor Profile of Surface: After preliminary surface preparation and prior to coating application to the interior of a manhole (excluding coatings only for interior of a chimney) compare and record anchor profile by comparison to various grits of sandpaper.
7. Surface Preparation: Shall be accepted by the coating system manufacturer prior to the application of the coating system.
8. Ambient Conditions: Measure and record the test results for relative humidity, manhole wall surface temperature, dew point and ambient temperature to ensure compliance for materials applied.
9. Coating Adhesion: After polymer coating system application and cure, measure and record the results of a minimum of two adhesion tests, without glue failures, per manhole at locations within the manhole as directed by the City Inspector. Tests shall be per ASTM D4541 as modified herein. Utilize a 20 mm test dolly and portable pull-off adhesion tester. Document test failure mode, whether failure is within the substrate, failure is within the coating, or failure is at the coating/substrate interface. Failure of the dolly adhesive shall require retesting. If the testing damages the coating, spot repair the test location while following manufacturer's recommendations. Failure at the coating/substrate interface with less than 10% of substrate adhered to the coating and less than 100 psi pull-off strength, shall be deemed a coating system failure and the Contractor shall remove the coating to soundly adhered edges, re-perform surface preparation procedures, and recoat the failed surfaces, at the Contractor's expense. Low pull-off strength values <150 psi) may require additional testing/evaluation to determine potential adhesion defects at the sole discretion of the Engineer. (Destructive adhesion testing as defined herein shall be performed on the initial manhole coated with a particular coating system. After the initial test, 10% of the manholes coated may require testing as selected by the Engineer. Initial and additional testing required due to test failures shall be at the Contractor's expense.)
10. Holiday Testing: The finished polymer coating shall be inspected per ASTM D-4787 "Continuity Verification of Liquid or Sheet Linings Applied to Concrete Substrates", using high-voltage spark testing equipment with variable settings. Test voltage shall be set at an initial 100 volts per mil (4,000 volts per mm) of specified film thickness, and then increased as needed to compensate for relative conductivity of the concrete substrate by spark testing an induced holiday at furthest extension of test probe from grounding location. Once test voltage is determined, it shall be used throughout that area, and then re-determined again every time a new ground is made. Detected holidays shall be marked and repaired per coating manufacturer's recommendations. Contractor shall be responsible to provide necessary Holiday Testing equipment for final inspection. Pinhole testing shall be accomplished using a Tinker Razor Holiday Detector, San Gabriel, CA, Model AP/W or an Engineer approved equal model. A test voltage of 100 volts/mil is recommended. This test shall identify and allow for the repair of pinholes in order to ensure a continuous pinhole-free lining. (Testing shall only be required where full depth manhole coating is specified.)

Docusign Envelope ID: AFCB16A4-B390-89EA-8013-04580053D90F

11. Exfiltration Testing: If necessary or as required perform exfiltration testing according to the following guidelines: Manholes and wetwells 6 feet deep or less should see less than one (1) inch of loss in five (5) minutes. Manholes and wetwells greater than 6 feet depth use one (1) inch plus an additional one eight (1/8) inch per additional foot of depth.
12. Vacuum Testing: May be conducted per ASTM C1244-93 only after rehabilitated structure has cured for a minimum of seven (7) days.

37.07 CONTAINMENT AND SITE CONDITIONS

A. No grouting materials, solvents, chemicals, blasting media, or debris of any sort shall be allowed to be discharged to the wastewater collection system. Water from pressure washing (>100 psi) may be allowed to enter the system after any debris has settled, when it demonstrated to the satisfaction of the City Inspector that no debris will enter the collection system. Water applied at less than 100 psi and containing common, household strength detergents, which are used strictly for rinsing the interior surfaces of the structure, may be allowed into the system as long as no debris are washed into the system. All odors noticeable by the average person shall be confined to an area within 10 feet of the structure. The Contractor shall provide odor control equipment or methods so odors are confined and in conjunction with closed space entry or other safety requirements.

B. Provide environmental controls such as ventilators if the cure time of the coating is slowed by the presence of coating or solvent vapor, and heaters and/or dehumidification as necessary to meet coating application requirements.

C. Applicator shall conform to all local, state, and federal regulations including those set forth by OSHA, RCRA, and the EPA.

37.08 WARRANTY

The Contractor shall unconditionally guarantee all manhole rehabilitation Work in this Contract against defects of materials and workmanship for a period of 3 years under normal use, operation, and service in accordance with the requirements of the Supplemental General Conditions article headed "Guarantee Period".

The Contractor and cementitious coating manufacturer shall warrant all cementitious manhole coating Work in this Contract against defects of materials and workmanship for a period of 10 years under normal use, operation, and service. The Contractor shall provide all testing and prepare all required installation reports, warranty registration documentation, etc. and submit same to the coating manufacturer and Engineer on behalf of the City. The Contractor shall furnish a warranty certificate from the cementitious coating manufacturer indicating acceptance and commencement of the warranty period. The Contractor and coating manufacturer shall, within sixty (60) days of written notice thereof, propose an acceptable method and repair any defects (including all labor and materials) that may develop during the warranty period in a manner acceptable to the Engineer and at no cost to the City. Defects shall be defined as: visible leakage of groundwater into the manhole or separation of any part of the coating from the host manhole or coating interfacing joints.

Docusign Envelope ID: AFCB16A4-B390-89EA-8013-04580053D90F

37.09 MATERIALS

A. Coating Products: Pure calcium aluminate cementitious manhole coating systems shall be Product A or B. Reinforced polymer manhole coating system shall be Product C, D, E, F, G, or H. Approved equal must be submitted for review and approval by the Engineer and City prior to bid.

B. Repair and Resurfacing Products: Repair materials must be compatible with specified manhole coating products and selected to minimize curing time. The following products may be accepted and approved as compatible:

1. Deneef AC 40, Avanti AV 100, or approved equal pressure grout for infiltration elimination.
2. 100% solids, solvent free epoxy grout specifically formulated to be suitable for top coating with the specified coating product(s}.
3. Factory blended, rapid setting, high early strength, fiber reinforced, non-shrink repair mortar that can be troweled or pneumatically spray applied, and specifically formulated to be suitable for top coating with the specified coating product(s}.
4. Products specifically designed for thin (1/4-inch or less) applications shall be used for channels needing to be raised to match or transition with CIPP (cured-in-place pipe) liners. Product shall be SikaTop 123 PLUS, or approved equal. Where manholes with CIPP liners are scheduled to receive a coating, any channel repair materials shall be as recommended by the specific coating manufacturer.

C. Brick Masonry and Precast Concrete Grade Adjustment Rings

1. Bricks shall be new, first quality, sound, hard, uniformly burned, regular and uniform in shape and size. Under burned or salmon brick shall not be acceptable. Only whole brick shall be used. Bricks shall conform to ASTM C32, Grade SS.
2. Precast concrete grade adjustment rings shall conform to the requirements of ASTM C 478. Precast adjustment rings shall not be less than 2 inches thick or be of multiple piece construction. To accommodate steep surface grades, non-uniform precast grade adjustment rings may be manufactured to 2 inches thick on one side and 3 inches thick on the opposite side.
3. Precast concrete grade adjustment rings shall provide structural capacity equal to or greater than the existing or specified manhole frame casting and shall not affect the opening size or surface appearance.
4. Mortar shall be factory blended, rapid setting, high early strength, fiber reinforced, non-metallic, chloride free, non-shrink or low-shrink repair mortar that can be troweled.

D. Frame and Cover Castings

1. Grey Iron castings shall conform to the requirements of ASTM A48 Class 35 B, unless otherwise specified, and be designed for HS-20 load rating.
2. Castings shall be manufactured true to pattern, and component parts shall fit together in a satisfactory manner. They shall be smooth and well cleaned by shot blasting. Circular manhole frame and cover castings shall be furnished with machined horizontal bearing surfaces. Frame and cover castings of the same nominal size shall be interchangeable.

Docusign Envelope ID: AFCB16A4-B390-89EA-8013-04580053D90F

E. Internal Chimney Sealant
1. The chimney sealant shall be minimum 100 mils thick of corrosion resistant aromatic flexible urethane resin coating applied to the inside wall of the chimney and manhole frame casting. The product shall have a minimum elongation of 800% and a Durometer of 75. The seal shall remain flexible allowing repeated vertical or horizontal movements of the manhole frame due to frost lift, ground movement or the thermal movement of pavements.
2. The chimney sealant shall have a minimum tensile and adhesion strength of 1150 PSI and 175 lb. per linear inch respectively. The chimney sealing system shall conform to the physical requirements of ASTM 0412. The chimney sealant shall be Flex-Seal Utility Sealant as manufactured by Sealing Systems. Inc. or approved equal.

F. Manhole Cover Insert
1. The insert body shall be manufactured of 304 stainless steel with a minimum thickness of 18 gauge. The insert shall have a deep-dish bowl design to allow for easy removal of the manhole cover. The insert shall be designed to provide a sufficiently loose fit in the manhole frame casting to allow for easy removal.
2. The insert body gasket shall seal against the frame casting, be made of closed cell neoprene, and affixed to the insert body with a pressure-sensitive adhesive. The gasket shall have a minimum thickness of 1/8 inch and be installed by the manufacturer.
3. The insert body shall have a handle made 3/16" plastic coated 304 stainless steel cable installed on the side of the bowl and attached with two 304 stainless steel round head bolts with flat washers and self-locking nuts.
4. The manhole cover insert and components shall be manufactured of materials resistant to corrosion from atmospheres containing hydrogen sulfide and dilute sulfuric acid. The manhole cover insert shall be InflowShield as manufactured by Inflow Systems, Inc. or approved equal.

G. Standardization: Materials, supplies, and articles provided shall be the standard products of the manufacturers and coating system specified. Coatings in a particular system shall be the products of a single manufacturer.

H. Delivery, Storage and Handling: Deliver materials for field application to the job site in their original, unopened, undamaged containers. Each container shall bear the manufacturers name brand, batch number, date of manufacture, and storage life. Coatings shall be stored in enclosed structures and shall be protected from weather, excessive high or low temperatures, and spills. Coatings exceeding storage life recommended by the manufacturer or that have been visibly damaged shall be removed from the site. Coating materials are to be stored and handled in accordance with their material safety data sheets.

37.10 REPAIR & PREPARATION

A. Repair of Bench and Channel: Manhole bench, flow channels, and inverts shall be repaired and/or constructed as directed to provide smooth flow characteristics and transition of flow through the manhole.

Docusign Envelope ID: AFCB16A4-B390-89EA-8013-04580053D90F

1. Contractor shall prepare, clean, and repair/rebuild manhole bench and flow channel(s) in the same manner as described above. Remove obstructions and loose materials from bench prior to shaping the channel and invert. Using brick and repair/resurfacing mortar, form a smooth, U-shaped channel having a minimum depth of one-half pipe diameter across the floor of the manhole using approved manhole rehabilitation materials. The top edge of the bench at the manhole wall shall be set at an elevation above one-half diameter of the adjacent pipe(s) and sloped at 1-inch per foot to drain toward the flow-through channel and outgoing pipe, and to intersect the channel edge at the one-half diameter level. Active flow shall be diverted as required to allow sufficient setting time for material used.
2. Form a smooth transition with a reshaped channel invert and a raised manhole bench to eliminate sharp edges on the pipe, bench, channel, or invert. Build up and smooth the invert of manhole to match flow line of the connecting pipes. Channel build-up and surface preparation for manholes to be coated shall be in accordance with the section headed "General Coating Preparation" in this Section of the Technical Specifications.
3. Finished benches, channels and inverts shall be smooth and without defects which would allow for accumulation of debris. Finished benches, channels and inverts shall conform to the Contract Documents.

B. Repair/Replacement of Chimney and Frame and Cover Casting

1. Frame and Cover Casting: Frame and cover castings shall be replaced with Contractor or City furnished frame and covers, as directed. Frame and cover replacement varies according to manhole type and shall be performed in accordance with the requirements of the Contract Documents. The existing castings shall be salvaged and delivered to the designated location.
2. Chimney: Manholes that have defective chimneys, frames and/or covers, or covers below grade will be designated for adjustment or replacement of the frame and cover. The Work shall include the following:
    a. Saw cut and remove existing asphaltic or concrete pavement. Existing brick or paver stone pavement shall be carefully removed without cutting and salvaged for reuse. Excavate to at least 6 inches below the bottom of the chimney replacement.
    b. Remove the existing manhole frame and cover casting, salvage and reuse the existing casting where adjustment is required, or deliver the salvaged casting to the designated location where replacement is required. Frames broken during removal or handling by the Contractor shall be replaced at the Contractor's expense.
    c. Remove loose, cracked, broken, deteriorated, deficient or otherwise unsound existing chimney materials as required or directed by the Engineer. Existing Portland cement brick shall be removed and replaced regardless of condition. Where existing frame and cover castings are being replaced with a larger frame and cover casting, the existing chimney/corbel shall be removed and replaced as required to provide a chimney that matches the opening of the larger replacement frame casting. Existing surfaces shall be cleaned and prepared for chimney replacement.
    d. The top of the cone shall be set between two and one-half inches and fourteen and one-half (14 1/2) inches below the bottom of the manhole cover

Docusign Envelope ID: AFCB16A4-B390-89EA-8013-04580053D90F

frame. It is the intent of the specifications to provide a minimum of two and one-half inches to accommodate future grade changes without disturbing the manhole. Where the distance between the bottom of the manhole cover frame and the top of the cone is greater than fourteen and one-half (14 1/2) inches, 12-inch riser units shall be used to bring the top of the cone to within the limits specified.

e. Replace existing chimney with new specified materials. The elevation and horizontal position of the frame shall be adjusted as necessary by installing precast grade adjustment rings or a sufficient number of brick and mortar rows to obtain the desired elevation. The frame and cover elevation and cross slope shall match the existing adjacent pavement. The frame and cover elevation shall be minimum 1 inch above existing grade in unpaved areas, or higher as directed by the Engineer. No materials other than the prepared mortar bed shall be used to obtain final elevation and slope of the frame. The prepared mortar bed shall be minimum 1/2 inch thick.

f. Backfill the excavation and restore surfaces to a condition equal or better than the existing condition prior to construction, in accordance with the requirements of the Contract Documents.

C. Elimination of Infiltration: Infiltration shall be considered as "Minor" or "Severe". (1) "Minor" infiltration consists of water penetration of the manhole structure, appearing as a wet stain or a minute flow (trickle) of water on the interior surface of the manhole. (2) "Severe" infiltration consists of multiple leaks penetrating an area or of single leaks that spray into the interior of the manhole which require drilling through the manhole structure and pumping grout by the use of pressurized injection grouting equipment to stop active leaks. Contractor shall ensure that all visible leaks are eliminated in accordance with the Contract Documents and the coating manufacturer's material recommendations prior to surface preparation and coating application.

1. "Minor" infiltration: If observed within the manhole structure after surface preparation is complete, the area shall be prepared and a product specifically formulated for infiltration control and recommended by the specified manhole coating manufacturer(s) shall be used to stop minor infiltration flows in accordance with the product manufacturer's guidelines.
2. "Severe" infiltration: Requires manhole drilling and pressure grouting. The products used for pressure grouting shall be installed in accordance with the manufacturer's guidelines. Substitute materials shall meet manhole coating manufacturer's recommendations for the particular manhole coating system specified.
    a. Manhole grouting shall only be performed where approved and after associated Work such as CIPP lining.
    b. Chemical grouting shall be performed beginning at the bottom of the manhole and continue up as required to seal all points of severe infiltration.
    c. Grouting, once commenced, shall be completed without stoppage. In case of equipment breakdown, wash out grouting system sufficiently to ensure fresh grout and adequate bond and penetration will occur upon restart. Maintain grout pressure until grout has set.
    d. Grout travel shall be verified by migration of grout to defects or adjacent injection holes.
    e. Injection holes shall be cleaned and patched with waterproof quick setting

Docusign Envelope ID: AFCB16A4-B390-89EA-8013-04580053D90F

mortar as recommended by grout manufacturer.

D. General Coating Preparation

1. Surfaces to be coated shall be cleaned and prepared per the coating manufacturer's recommendations or per International Concrete Repair Institute (ICRI) Guideline Number 03732, whichever is more rigorous. Before applying coating, all contaminants including wastewater, oil, grease, dirt, rust, loose mill scale, waxes, efflorescence, sealers, salts, old coatings, and other foreign substances shall be removed. Oil and grease shall be removed before mechanical cleaning (hydro-blasting) is started. Where mechanical cleaning is accomplished by abrasive blast cleaning, the abrasive used shall be washed, graded and free of contaminates which might interfere with the adhesion of the coating. Steam cleaning, detergent, industrial degreasers, and/or hot water shall be used to clean wall surfaces unless this is contrary to the recommendations of the specific coating system manufacturer. Acid solutions shall not be used.
2. As necessary, wastewater flow shall be stopped, bypassed or diverted for the preparation and application of the coating product{s).
3. Contractor shall prepare, clean, and seal all manhole wall penetrations in accordance with coating manufacturer's recommendations and as approved by the Engineer. Bench, channel, invert, chimney, and frame and cover casting repairs and/or replacements shall be completed before coatings are applied.
4. During surface preparation and coatings application, all nearby equipment, vehicles, structures, etc. shall be protected from blasting grit, dust and over sprayed, dropped or spilled materials. Surfaces adjacent to a proposed leading edge of coating application shall be taped-off or otherwise protected.
5. Clean cloths and clean fluids shall be used in solvent cleaning.
6. Contractor shall inspect all surfaces specified to receive a protective coating prior to surface preparation. Contractor shall notify Engineer of any noticeable disparity in the surfaces which may interfere with the proper preparation or application of the repair mortar and coating. Surface profile created by mechanical cleaning shall be per the coating manufacturer's recommendations.
7. Damaged surfaces shall be observed by the City Inspector before repairs are made. Where concrete or brick deterioration in a manhole structure is severe, structural integrity may need to be restored prior to application of coating, at Engineer's approval.
8. All active infiltration must be eliminated prior to proposed repair with materials as recommended by the coating manufacturer.
9. Plug or place covers over all pipe openings to prevent extraneous material from entering the wastewater system.

E. Surface Preparation of Concrete and Masonry Surfaces

1. Concrete: prepare per SSPC SP13/NACE 6 "Surface Preparation for Concrete," and the coating manufacturer's recommendations. All leaks evidenced by indications of infiltration, shall be plugged with materials as recommended by coating manufacturer. Surface profile created by abrasive blasted surfaces shall be per the manufacturer's recommendation for the coating system.
2. Brick Manhole: prepare per the coating manufacturer's recommendations. Contractor shall remove all oil, grease, chemicals and paints or protective coatings

Docusign Envelope ID: AFCB16A4-B390-89EA-8013-04580053D90F

by chemical cleaning prior to hydro-blasting or abrasive blasting. All foreign particles and attacked or unsound mortar shall be removed from the joints. All leaks evidenced by indications of infiltration, shall be plugged with materials as recommended by coating manufacturer. Loose brickwork and voids in the mortar joints shall be re-grouted with repair materials to provide a void free smooth surface for coating application.

3. Loose or protruding brick, mortar and concrete shall be removed by using a mason's hammer and chisel. The surface to be repaired must be clean and free of any loose materials.
4. Repair products shall be used to fill bugholes, holes, honeycombs, for patching of deep craters, voids or spalled areas of concrete, and/or smoothing transitions between components prior to coating installation. Products used must be compatible with the specified coating system(s) and used/applied in accordance with the repair product manufacturer's recommendations. Materials used shall be recommended by the coating system manufacturer.
5. Resurfacing/repair products shall be mixed, applied, allowed to cure, and treated per their manufacturer's recommendations, before they are coated. The Contractor shall ensure that resurfacing/repair and/or patching materials are fully cured before final surface preparation or coating application. The Contractor shall follow manufacturer's cure schedule before over coating.
6. Surfaces which are to be coated shall be allowed to dry to the moisture content recommended by the coating manufacturer.

F. Coating Interface with Adjoining Construction Materials

1. Coating product(s) shall interface with adjoining construction materials throughout the manhole structure to effectively seal and protect concrete or masonry substrates from infiltration and attack by corrosive elements. Procedures and materials necessary to affect this interface shall be as recommended by the coating product(s) manufacturer and approved by the Engineer. Termination points of the polymer coating product(s) shall have a minimum three (3) inch interface overlap with each pipe penetration. Termination points of the cementitious coating product(s) shall have flush interface abutting each pipe penetration. Wastewater flow shall be stopped, bypassed or diverted for the preparation and application of the coating product(s) to the invert and interface with pipe materials.
2. CIPP Liners: Polymer manhole coatings shall be chemically compatible with and have the ability to bond with the external or internal (with required surface preparation) surface of CIPP liners. Where manholes are coated in conjunction with CIPP lining activities by others, coating shall take place after pipe lining and utilize the existing wastewater Bypass Pumping setup where possible. Resurfacing/repair products shall be selected to minimize curing time. Manhole surface preparation and repair materials prior to coating shall be placed within the invert, channel, and benches at proper depth to allow for proper coating thickness, interface matching with CIPP profile, and minimum three (3) inch overlap of polymer coatings with CIPP terminal edges (internally or externally) in the invert, channel, benches, and remaining areas. The coating shall be monolithic with piping and manhole components. The CIPP surface to be interfaced with and overlapped with polymer coatings shall be clean and remain protected prior to coating. Surface preparation of internal CIPP surfaces shall require wire brushing or other approved means prior to coating to ensure bonding.

Docusign Envelope ID: AFCB16A4-B390-89EA-8013-04580053D90F

G. Final Cleaning: The Contractor shall ensure that all surfaces to be coated are free of dust, moisture, and condensation. Nearby surfaces shall be cleaned to prevent contamination of substrate or freshly applied coatings.

H. Internal Chimney Sealant Application
1. All loose and protruding mortar and brick that would interfere with the seal's performance shall be removed and the manhole frame casting, chimney and cone/corbel cleaned by wire brushing. Prepare the surface as required by the manufacturer.
2. Active infiltration shall be corrected in accordance with the requirements of the section headed "Elimination of Infiltration" in this Section of the Technical Specifications prior to installing the internal chimney sealant. Resurfacing/repair products shall be completely cured in accordance with the manufacturer's requirements prior to installing the internal chimney sealant. The substrate surface must be free of sand, loose debris, dust, dirt, oil, grease or chemical contamination. A blower may be required to completely dry the substrate surface as recommended by the manufacturer.
3. Ensure the frame casting and structure is clean and dry prior to applying the adhesive primer. Brush the adhesive primer onto the casting and structure surfaces where the sealant is intended to adhere, in accordance with the requirements of the manufacturer.
4. The chimney sealant shall be evenly brush applied to the required thickness after the adhesive primer has dried, in accordance with the requirements of the manufacturer.
5. The chimney sealant shall be applied and extend vertically from 1-inch above the frame seal to 2-inches below the chimney and cone/corbel joint. The chimney sealant shall be applied and extend vertically from 1-inch above the frame seal to 12-inches below the frame seal for brick manholes where the frame is installed directly on the cone/corbel.

I. Manhole Cover Insert Installation
1. The Contractor shall accurately measure the existing frame and cover casting prior to ordering the manhole cover insert.
2. The manhole frame casting seat shall be free of all dirt, debris, rust and scale prior to the installation of the manhole cover insert. The insert shall be fully seated around the frame casting seat to ensure against water seepage between the insert and frame casting, and as recommended by the manufacturer.

37.11 COATING MATERIAL APPLICATION

A. Workmanship: Coating shall be conducted in accordance with the requirements of SSPC, Good Painting Practice, Volume 1.
1. Coated surfaces shall be free from significant runs, drips, ridges, waves, laps and brush marks, etc. Coats shall be applied so as to produce an even film of uniform thickness.
2. Coating equipment shall be designed for application of the materials specified.
   a. Compressors shall have traps and filters to remove water and oils.
   b. Spray equipment shall be equipped with mechanical agitators, pressure gages, and pressure regulators, and spray nozzles of the proper sizes and functioning in a manner suitable to perform the work.
   c. The spray equipment shall be specifically designed to accurately ratio and apply the specified protective coating materials and shall be regularly maintained and in proper working order. Spray application equipment must be approved by the coating manufacturer and shall be used to apply each coat of the protective coating.
3. Each coat shall be applied evenly and sharply cut to line.

Docusign Envelope ID: AFCB16A4-B390-89EA-8013-04580053D90F

B. Coating Properties, Mixing, and Thinning

1. Coating shall provide a monolithic film with coverage of all specified surfaces and interfacing joints. Undercoats shall be sanded as required to provide a surface suitable for the proper application and adhesion of subsequent coats. Coating shall be thoroughly stirred, strained, and kept at a uniform consistency during application.
2. Coatings shall be mixed in accordance with the manufacturer's instructions.
3. Clean, potable water shall be used for mixing and accurately metering to the prescribed amount for each batch of the lining system

C. Method of Coating Application

1. Observe OSHA Safety Guidelines when entering Confined Space working areas
2. Where two or more coats are required, all coats shall be WFT tested.
3. Coating shall not be applied to a surface until it has been prepared as specified and approved for coating by the manufacturer.
4. Action shall be taken to prevent rebound material from entering active sewer lines

D. Film Thickness and Continuity

1. Coating system thickness is the total thickness of primer and finish coats. Coatings shall be applied to the thickness specified.
2. Overspray, pinholes and other surface defects shall be repaired.

37.12 COATING SYSTEM SPECIFICATION SHEETS

Coating Systems specified for use appear on the following pages.

Product A

Manufacturer:	Kerneos Inc., 1316 Priority Lane, Chesapeake, VA-1-877-KERNEOS, 757-284-3200 or FAX 757-284-3300.
Product Name:	SewperCoat PG
Qualifications:	Applicator shall be trained and certified by the manufacturer as qualified to apply the specified coating. Applicator qualifications are addressed under item 12 of the Proposal Questionnaire. Provide references and documentation of certification and experience with submittals.
Material Classification:	Pre-packaged 100% calcium aluminate fiber reinforced cementitious monolithic coating composed of pure fused calcium aluminate cement and manufactured calcium aluminate aggregate (no other aggregate material permitted), and is resistant to biosulfuric acid attack. Chemical composition of the calcium aluminate cement and aggregate portion: Al_20_3= 39 - 44%, CaO = 34 - 38%, $FeO+Fe_20_3$ = 9 - 15%, $Si0_2$=6 - 8%.
Surfaces:	Field applied to existing manholes. Coat all of interior of existing concrete, brick, and block manholes, including channels, and interfacing pipe joints.
Color:	Gray
Compressive Strength:	>7,000 psi @ 28 Days per ASTM C1 09
Tensile Strength:	>700 psi @ 28 Days per ASTM C496
Flexural Strength:	> 1,300 psi @ 28 Days per ASTM C348
Shrinkage @ 90% RH:	<0.07% @ 28 Days per ASTM C596
Bond:	>2,500 psi @ 28 Days per ASTM C882

Docusign Envelope ID: AFCB16A4-B390-89EA-8013-04580053D90F

Freeze-Thaw:	No visible damage after 300 cycles per ASTM C666
Density:	Per manufacturer
Service Condition:	Immersed, non-immersed, domestic wastewater corrosive environment.
Surface Preparation:	Per the International Concrete Repair Institute (ICRI) Guideline No. 03732 and the section headed "Preparation" in this Section of the Technical Specifications. Inject or hand pack grout to seal holes, leaks and seeping. Prepared surface shall be thoroughly moistened with water prior to the application. Do not apply to surfaces with running water.
Repair Materials:	Patching grout, infiltration control grout, and any other repair materials shall comply with the recommendations of the manufacturer. No holes or honeycomb surfaces should remain after the application of the repair mortar. Materials shall be fully cured before coating is applied.
Environmental Controls:	Minimum air temperature 40 degrees F and do not expose to rain or snow. Maximum mix temperature 90 degrees F at time of application. Provide ventilation as recommended by manufacturer. Provide wastewater bypass as necessary
Application:	Field application by "wet-shotcrete" method typically with a low-pressure progressive cavity (rotor/stator) type pump that is clean and free of any Portland cement residue. Only unopened manufacturer pre-packaged material permitted for use and mixed with clean potable water per manufacturer's recommendation. Applied by trained technician who is experienced in the application of spray applied cementitious coatings and has been certified by the manufacturer. Coating shall be applied within 24 hours of completion of surface preparation. The finished bench surfaces shall be smooth, free of ridges and will be sloped in the direction of flow. Special care shall be used to ensure a smooth transition between the new manhole invert and intersecting pipe inverts such that flow will not be impaired. Manufacturer to certify equipment proposed for use by Contractor.
Curing:	Per manufacturer's recommendations and minimum 18 hours moist curing. Curing compound, if required, shall meet the requirements of ASTM C309 and be approved by the lining material manufacturer and the Engineer prior to use. Minimum 6 hours curing prior to contact or immersion with flowing wastewater
Thickness:	Minimum of 1/2 inch DFT
Tolerances:	Minus 0 inches.
Cleanup:	Water
Inspection Check Points:	See the subsection headed "Quality Assurance/Quality Control" in this Section of the Technical Specifications. Check Points 1 through 10.

Product B

Manufacturer:	The Strong Company, Inc., 4505 Emmett Sanders Road, Pine Bluff, AR -1-800-982-8009 or FAX 870-850-6933.
Product Name:	High Performance Mix
Qualifications:	Applicator shall be trained and certified by the manufacturer as qualified to apply the specified coating. Applicator qualifications are addressed under item 12 of the Proposal Questionnaire. Provide references and documentation of certification and experience with submittals.
Material Classification:	Pre-packaged 100% calcium aluminate fiber reinforced cementitious monolithic coating composed of pure fused calcium aluminate cement and

Docusign Envelope ID: AFCB16A4-B390-89EA-8013-04580053D90F

	manufactured calcium aluminate aggregate (no other aggregate material permitted) and is resistant to biosulfuric acid attack. Chemical composition of the calcium aluminate cement and aggregate portion: Al_20 3::: 39 44%, CaO ::: 34 - 38%, $FeO+Fe_20_3$ ::: 9 - 15%, $Si0_2$::: 6 - 8%.
Surfaces:	Field applied to existing manholes. Coat all of interior of existing concrete, brick, and block manholes, including channels, and interfacing pipe joints.
Color:	Gray
Compressive Strength:	>9,000 psi @ 28 Days per ASTM C109
Tensile Strength:	>800 psi @ 28 Days per ASTM C496
Flexural Strength:	>1,300 psi @ 28 Days per ASTM C293
Shrinkage @ 90% RH:	0% @ 28 Days per ASTM C596
Bond:	>3,000 psi @ 28 Days per ASTM C882
Freeze-Thaw:	No visible damage after 300 cycles per ASTM C666
Density:	Per manufacturer.
Service Condition:	Immersed, non-immersed, domestic wastewater corrosive environment.
Surface Preparation:	Per the International Concrete Repair Institute (ICRI) Guideline No. 03732 and the section headed "Preparation" in this Section of the Technical Specifications. Inject or hand pack grout to seal holes, leaks and seeping. Prepared surface shall be thoroughly moistened with water prior to the application. Do not apply to surfaces with running water.
Repair Materials:	Patching grout, infiltration control grout, and any other repair materials shall comply with the recommendations of the manufacturer. No holes or honeycomb surfaces should remain after the application of the repair mortar. Materials shall be fully cured before coating is applied.
Environmental Controls:	Minimum air temperature 40 degrees F and do not expose to rain or snow. Maximum mix temperature 90 degrees F at time of application. Provide ventilation as recommended by manufacturer. Provide wastewater bypass as necessary.
Application:	Field application by "wet-shotcrete" method typically with a low-pressure progressive cavity (rotor/stator) type pump that is clean and free of any Portland cement residue. Only unopened manufacturer pre-packaged material permitted for use and mixed with clean potable water per manufacturer's recommendation. Applied by trained technician who is experienced in the application of spray applied cementitious coatings and has been certified by the manufacturer. Coating shall be applied within 24 hours of completion of surface preparation. The finished bench surfaces shall be smooth, free of ridges and will be sloped in the direction of flow. Special care shall be used to ensure a smooth transition between the new manhole invert and intersecting pipe inverts such that flow will not be impaired. Manufacturer to certify equipment proposed for use by Contractor.
Curing:	Per manufacturer's recommendations and minimum 18 hours moist curing. Curing compound, if required, shall meet the requirements of ASTM C309 and be approved by the lining material manufacturer and the Engineer prior to use. Minimum 6 hours curing prior to contact or immersion with flowing wastewater.
Thickness:	Minimum of 1/2 inch DFT
Tolerances:	Minus 0 inches.
Cleanup:	Water
Inspection Check Points:	See the subsection headed "Quality Assurance/Quality Control" in this Section of the Technical Specifications. Check Points 1 through 10.

Docusign Envelope ID: AFCB16A4-B390-89EA-8013-04580053D90F

Product C

Manufacturer:	Protective Liner Systems, Inc. 7625 Mall Parkway, Lithonia, GA 30038. P.O. Box 921, Lithonia, GA 30058. (770) 482-5201, (770) 861-9965.
Product Name:	PLS-650 PerpetuWall Liner System. (PLS-613, PLS-614, PLS-700 and PLS-618)
Qualifications:	Applicator shall be trained and certified by the manufacturer as qualified to apply the specified coating. Applicator qualifications are addressed under item 12 of the Proposal Questionnaire. Provide references and documentation of certification and experience with submittals.
Material Classification:	Fiberglass-reinforced modified epoxy resin monolithic coating system. 100% solids bisphenol A epoxy resin with polyamide curing agent. Materials per ASTM D638-Test Method for Tensile Properties of Plastics, and ASTM D790-Test Methods for Flexural Properties of Unreinforced and Reinforced Plastics and Electrical Insulating Materials.
Surfaces:	Field applied to existing manholes. Coat all of interior of existing concrete, brick, and block manholes, including channels and interfacing pipe joints.
Color:	Light gray
Compressive Strength:	16,800 psi per ASTM D695
Tensile Strength:	12,400 psi per ASTM D638
Flexural Strength:	13,900 psi per ASTM D790
Shrinkage @ 90% RH:	500,000 psi per ASTM D790
Bond:	Shall exceed tensile strength of substrate
Low-Temp. Flexibility:	Per manufacturer, per ASTM D1790
Density:	Per manufacturer.
Service Condition:	Immersed, non-potable, non-immersed, domestic wastewater, corrosive environment, interior and exterior water pressure, traffic areas.
Surface Preparation:	Per the section headed "Preparation" in this Section of the Technical Specifications. In addition, galvanized steel and aluminum may require etching. Inject or hand pack grout to seal holes, leaks and seeping. Can be applied to wet or dry surface. do not apply to surfaces with active infiltration or running water.
Repair Materials:	Patching grout, infiltration control grout, and any other repair materials shall comply with the recommendations of the manufacturer. No holes or honeycomb surfaces should remain after the application of the repair mortar. Materials shall be fully cured before coating is applied.
Environmental Controls:	Provide heaters, dehumidification, and ventilation as recommended by manufacturer and as needed. Provide wastewater bypass as necessary.
Design:	Shall be designed to withstand the hydraulic load generated by the groundwater table. The invert and bench coating thickness shall be the same as that required at the bottom of the manhole wall as determined by the manufacturer's standard engineering calculations for groundwater pressure. Coating thickness design to be based on the groundwater table being one foot below the ground surface. Testing required for design values of the flexural modulus of the coating will be verified by a third-party independent testing lab paid for by the Contractor. The test results and design information for each individual structure shall be submitted to the Engineer for review.
Application:	Field application of PLS-613 or PLS-614 depending on temperature and conditions of application by trained technician who has been certified by the

Docusign Envelope ID: AFCB16A4-B390-89EA-8013-04580053D90F

	manufacturer. PLS-613 can be hand applied by brush, roller or trowel on dry or wet surface. PLS-614 is applied by trowel on dry or wet surface. Coating shall be applied within 24 hours of completion of surface preparation. Coating steps: (1) Begin with an approximate WFT of 100 mils (2) fiberglass fabric cut and pressed into epoxy mastic to full wet-out (3) adjacent applications of fabric edges to be overlapped or butt-jointed (4) fabric top coated with epoxy PLS-613 or PLS-614. Additional coats can be applied in 2-3 hours, but no later than 24 hrs. The finished bench surfaces shall be smooth, free of ridges and will be sloped in the direction of flow. Special care shall be used to ensure a smooth transition between the new manhole invert and intersecting pipe inverts such that flow will not be impaired. Manufacturer to certify equipment proposed for use by Contractor.
Curing:	Coating will cure in 3-4 hours at 70 degrees F to approximately 75% of their strength, after which time may be subjected to active flow. Maximum physical properties achieved in 4-5 days. Higher temperatures will reduce these requirements.
Thickness:	Per manufacturer's design. 125 mils minimum thickness.
Tolerances:	Plus 20 mils or minus 10 mils.
Cleanup:	Clean equipment with Xylene or lacquer thinner. Clean hands with denatured alcohol or Go-Jo type hand cleaner. Dispose of solvent and debris as required by code.
Inspection Check Points:	See the subsection headed "Quality Assurance/Quality Control" in this Section of the Technical Specifications. Check Points 1 through 10.

Product D

Manufacturer:	International Paint LLC; 6001 Antoine Drive, Houston TX 77091 (713) 682-1711
Product Name:	Enviroline 222
Qualifications:	Contractor/applicator trained in the application of high-performance industrial lining systems
Material Classification:	Epoxy novolac
Surfaces:	Carbon steel, stainless steel, concrete; substrate preparation and application in accordance with Manufacturer Data Sheet and Application Guidelines
Color:	Green, Gray
Compressive Strength:	ASTM D695 @ 40 mils TDFT: 72MPa
Tensile Strength:	ASTM D638 @ 40 mils TDFT: 38MPa
Flexural Strength:	ASTM D790 @ 40 mils TDFT: 66MPa
Shrinkage @ 90% RH:	N/A
Bond:	1700 psi on steel, exceeds tensile strength of concrete
Low-Temp. Flexibility:	N/A
Density:	11.4 lbs/gal (1.62 g/cm) / ASTM D1475
Service Condition:	Immersion or secondary containment of wastewater infrastructure, non-potable water and chemicals
Surface Preparation:	Substrate preparation in accordance with Manufacturer Data Sheet and Application Guidelines
Repair Materials:	Intercrete 4801, 4802 & 4820, for topcoat epoxy repair: Enviroline 222 and depending on service, Enviroline 124
Environmental Controls:	Substrate preparation and application in accordance with Manufacturer

Docusign Envelope ID: AFCB16A4-B390-89EA-8013-04580053D90F

	Data Sheet and Application Guidelines
Application:	Application in accordance with Manufacturer Data Sheet and Application Guidelines
Curing:	8 hours at 77° F.
Thickness:	20-100 mils TDFT
Tolerances:	SSPC-PA 2 Level 3
Cleanup:	Enviroline 71C
Abrasion Resistance	ASTM 4060 average of 41.4 mg weight loss per 1000 cycles, CS17 wheel with 1kg loading
Severe Wastewater Analysis Test (ASTM G210)	ASTM G210 Performed well in Severe Wastewater Analysis Test
Inspection Check Points:	See the subsection headed "Quality Assurance/Quality Control" in this Section of the Technical Specifications. Check Points 1 through 10.

Product E

Manufacturer:	Tnemec Company, Inc. 123 West 23rd Ave, North Kansas City, MO, 64116 Phone: 1-816-483-3400 Represented locally by Florida Protective Coatings Services Office Phone: (407) 322 – 1243 Local Representative (Chad Holmes) Phone: (727) 201 – 6706
Product Name:	Tnemec Perma-Shield Series 435 Perma-Glaze
Qualifications:	Applicator must have a minimum NACE level 1 on staff and have a minimum 5 completed projects of similar size & complexity to this work with the use of Tnemec coatings. Applicator must meet all other requirements of the municipality.
Material Classification:	Micro-Fiber Reinforced, Modified Polyamine Epoxy
Surfaces:	Field applied to existing manholes. Coat all of interior of existing concrete, brick, and block manholes, including channels and interfacing pipe joints.
Color:	Gray or Beige
Compressive Strength:	No Less than 9,427 (65.0 MPa) compressive strength, average of five tests.
Tensile Strength:	No less than 3,231 psi (22.28 MPa) tensile strength.
Tensile Modulus of Elasticity (ASTM D2370)	No less than 241,368 psi (1664.17 MPa) tensile modulus of elasticity.
Service Condition:	**Non-potable, anaerobic wastewater environments with mild H_2S concentrations (Immersion & Headspace).**
Surface Preparation:	Abrasive blast or mechanically abrade in accordance with SSPC-SP13/NACE No. 6 to remove all existing coatings and provide a minimum ICRI CSP 5 surface profile. Surface must be clean, dry, and contaminant-free prior to coating.
Repair Materials:	Tnemec Series 218 at a nominal 1/8” and as needed to bring surfaces to level. Series 217 may also be used for deeper repairs (See Application Guide for details).
Environmental Controls:	Substrate temperature should be at least 5°F above the dew point. Refer to manufacturer’s latest written recommendations for additional guidance.
Application:	Refer to product data sheet and Series 435 Application Guide for latest storage, equipment, and application recommendations. Refer to Tnemec’s Perma-Shield Details Guide for construction details

Docusign Envelope ID: AFCB16A4-B390-89EA-8013-04580053D90F

Curing:	Maximum recoat window is 7 days. Cure for 2 days (at 75°F) prior to placing into service.
Thickness:	30.0 – 40.0 mils in one or two coats.
Cleanup:	Tnemec's #4 thinner or MEK.
Abrasion Resistance	No more than 72 mg loss after 1,000 cycles, average of three tests
Severe Wastewater Analysis Test (ASTM G210)	Initial impedance of 12.46 log-Z at 0.01 Hz (ohms cm²). No blistering, cracking, checking or delamination. No less than 84.3% retention and no more than 1.95 ohms cm² reduction in electrochemical impedance after 28 days exposure. No less than 93% loss of tensile adhesion after 28 days in S.W.A.T. average of three tests.
Inspection Check Points:	See the subsection headed "Quality Assurance/Quality Control" in this Section of the Technical Specifications. Check Points 1 through 10.

Product F

Manufacturer:	Tnemec Company, Inc. 123 West 23rd Ave, North Kansas City, MO, 64116 Phone: 1-816-483-3400 Represented locally by Florida Protective Coatings Services Office Phone: (407) 322 – 1243 Local Representative (Chad Holmes) Phone: (727) 201 – 6706
Product Name:	Body Coat (Option 1): Tnemec Series 434 Perma-Shield H_2S. Body Coat (Option 2): Tnemec Series 436 Perma-Shield FR. Glaze Coat: Tnemec Series 435 Perma-Glaze
Qualifications:	Applicator must have a minimum NACE level 1 on staff and have a minimum 5 completed projects of similar size & complexity to this work with the use of Tnemec coatings. Applicator must meet all other requirements of the municipality.
Material Classification:	434: Modified Aliphatic Amine Epoxy Mortar 436: Fiber-Reinforced Modified Polyamine Epoxy 435: Micro-Fiber Reinforced, Modified Polyamine Epoxy
Surfaces:	Field applied to existing manholes. Coat all of interior of existing concrete, brick, and block manholes, including channels and interfacing pipe joints.
Color:	Gray or Beige
Compressive Strength:	No Less than 8,866 psi (6.13 MPa) compressive strength, average of five tests.
Tensile Strength:	No less than 2,940 psi (20.3 MPa) tensile strength.
Tensile Modulus of Elasticity (ASTM D2370)	No less than 6,753 psi (46.6 MPa) tensile modulus of elasticity.
Service Condition:	**Non-potable, anaerobic wastewater environments with moderate to severe H_2S concentrations (Immersion & Headspace).**
Surface Preparation:	Abrasive blast or mechanically abrade in accordance with SSPC-SP13/NACE No. 6 to remove all existing coatings and provide a minimum ICRI CSP 5 surface profile. Surface must be clean, dry, and contaminant-free prior to coating. Cementitious surfaces with a pH less than 9 shall not be considered "contaminant-free".
Repair Materials:	Tnemec Series 218 at a nominal 1/8" and as needed to bring surfaces to level. Series 217 may also be used for deeper repairs (See Application Guide for details).
Environmental Controls:	Substrate temperature should be at least 5°F above the dew point. Refer to

Docusign Envelope ID: AFCB16A4-B390-89EA-8013-04580053D90F

	manufacturer's latest written recommendations for additional guidance.
Application:	Refer to Tnemec Product Data Sheets and Application Guides for latest storage, equipment, and application recommendations. Refer to Tnemec's Perma-Shield Details Guide for construction details.
Curing:	Maximum recoat window is 7 days. Cure for 2 days (at 75°F) prior to placing into service.
Thickness:	Body Coat (Option 1) Series 434: Nominal 1/8", or 125.0 mils thickness. Body Coat (Option 2) Series 436: Nominal 1/8", or 125.0 mils thickness. Glaze Coat Series 435: 15.0 – 20.0 mils.
Cleanup:	Tnemec's #4 thinner or MEK.
Abrasion Resistance	No more than 72 mg loss after 1,000 cycles, average of three tests.
Severe Wastewater Analysis Test (ASTM G210)	Series 434: Initial impedance of 10.6 log-Z at 0.01 Hz (ohms cm²). No blistering, cracking, checking or delamination. No less than 86.7% retention or not more than 1.4 ohms cm² reduction in log-Z electrochemical impedance at 0.01 Hz after 28 days exposure. No loss of adhesion after 28 days in S.W.A.T., average of three tests. Series 436: Initial impedance of 10.2 log-Z at 0.01 Hz (ohms cm²). No blistering, cracking, checking or delamination. No less than 83.7% retention or not more than 1.6 ohms cm² reduction in log-Z electrochemical impedance at 0.01 Hz after 28 days exposure. Series 435: Initial impedance of 12.46 log-Z at 0.01 Hz (ohms cm²). No blistering, cracking, checking or delamination. No less than 84.3% retention and no more than 1.95 ohms cm² reduction in electrochemical impedance after 28 days exposure. No less than 93% loss of tensile adhesion after 28 days in S.W.A.T. average of three tests.
Inspection Check Points:	See the subsection headed "Quality Assurance/Quality Control" in this Section of the Technical Specifications. Check Points 1 through 10.

Product G

Manufacturer:	GML Coatings, LLC. 10315 Technology Terrace, Bradenton FL 34211 (941) 755-2176, GMLCOATINGS.COM
Product Name:	Green Monster Liner Structural
Qualifications:	Coating shall be manufactured by GML Coatings, LLC., or pre-approved equal. The completed system shall provide a waterproof, corrosion resistant liner to prevent any deterioration of concrete surfaces from hydrogen sulfide and other corrosive gases/acids produced by wastewater and to prevent infiltration. **To ensure total unit responsibility, all materials and installation thereof shall be approved and furnished by, and coordinated with, GML Coatings LLC.**
Material Classification:	Green Monster Liner Structural is a two component, 100% solids, zero VOC, polyurethane hybrid, structural coating.
Surfaces:	Existing and new concrete or brick manholes, lift stations, WWTP infrastructures, metals, and fiberglass.
Color:	Light Green
Tensile Strength:	4,500 psi per ASTM D412

Docusign Envelope ID: AFCB16A4-B390-89EA-8013-04580053D90F

Flexural Modulus	>80,000 per ASTM D729
Bond (without primer):	>480 psi per ASTM D 4541 (Substrate failure) concrete >3000 psi per ASTM D 4541 (Substrate failure) carbon steel
Service Condition:	Manholes, Wetwells, WWTP
Surface Preparation:	For optimum performance, concrete should be hydro blasted and/or sandblasted. Concrete that has been adhesion tested and approved to be compatible with **Green Monster Liner Structural** should have cured completely and show a pH of 11 or lower and heated with indirect heat before priming and coating.
Repair Materials:	Remove the portion that is damaged, clean concrete behind damaged liner, prepare surrounding liner for application, apply new liner.
Environmental Controls:	Bypass wastewater as needed, provide heaters, and ventilation
Application:	Surface temperature shall be decreasing while applying liner. Surface moisture content shall be 2% or less, (RH humidity chart will allow higher reading). Prior to application of material, make sure that there is no loose dust, dirt, grease, petrochemicals, or any material that will interfere with the bonding process. For maximum adhesion, Green Monster Liner Structural should always be applied over Green Monster Primer. After following the proper steps according to the GML System Specs, Green Monster Liner Structural should be applied in a cross directional method. It is very important to maintain constant pressure while spraying. A radical variation of these pressures can result in a loss of physical properties, poor color retention, bubbling and de-bonding of the material from the surface applied to. Hose temperature should maintain a minimum temperature of 155°F.
Thickness:	It is recommended to apply Green Monster Liner Structural at a minimum thickness of 125 mils to an unlimited build thickness. Standard application thickness for manholes and lift stations is 250 mils.
Cleanup:	Cured product may be disposed of without restriction. The uncured isocyanate and resin portions should be disposed of according to local, state, and federal laws.
Inspection Check Points:	See the subsection headed "Quality Assurance/Quality Control" in this Section of the Technical Specifications. Check Points 1 through 10.

Product H

Manufacturer:	Raven Lining Systems 686 S. Adams St. Kansas City, KS. 66105 (913) 321-9000
Product Name:	Raven 405
Qualifications:	Applicator shall be trained and certified by the manufacturer as qualified to apply the specified coating.
Material Classification:	100% solids, ultra-high build, solvent-free epoxy coating
Surfaces:	Field applied to existing manholes. Coat all of interior of existing concrete, brick, and block manholes, including channels and interfacing pipe joints.
Color:	Light blue
Compressive Strength:	18,000 psi per ASTM D695
Tensile Strength:	>9000 psi per ASTM D638
Flexural Strength:	15,000 psi per ASTM D790

Docusign Envelope ID: AFCB16A4-B390-89EA-8013-04580053D90F

Shrinkage @ 90% RH:	Per manufacturer
Bond:	Shall exceed tensile strength of substrate
Low-Temp. Flexibility:	Per manufacturer, per ASTM D1790
Density:	Per manufacturer.
Service Condition:	Immersed, non-potable, non-immersed, domestic wastewater, corrosive environment, interior and exterior water pressure, traffic areas.
Surface Preparation:	Per TDS
Repair Materials:	Patching grout, infiltration control grout, and any other repair materials shall comply with the recommendations of the manufacture.
Environmental Controls:	Per manufacturer
Design:	Shall be designed to withstand the hydraulic load generated by the groundwater table. All structures shall be coated with 125 mils Raven 405 un structure is more than 60 ft below water table.
Application:	Shall be applied per manufacturer's application guidelines.
Curing:	Flow can continue after 3 to 6 hours depending on environmental conditions.
Thickness:	Per manufacturer's design. 125 mils minimum thickness.
Tolerances:	Plus 20 mils or minus 10 mils.
Cleanup:	Per manufacturer
Inspection Check Points:	See the subsection headed "Quality Assurance/Quality Control" in this Section of the Technical Specifications. Check Points 1 through 10.

END OF SECTION

Docusign Envelope ID: AFCB16A4-B390-89EA-8013-04580053D90F

THIS PAGE INTENTIONALLY LEFT BLANK

Docusign Envelope ID: AFCB16A4-B390-89EA-8013-04580053D90F

CITY OF ST. PETE BEACH					
WASTEWATER SYSTEM REHABILITATION SERVICES					
ITEM	DESCRIPTION	QTY	UNIT	UNIT PRICE	AMOUNT
MANHOLE REHABILITATION					
1	Mobilization	1	EA		$ -
2	Flagmen (Per-Flagmen)	20	HR		$ -
3	Multi Lane, Lane Closures (FDOT Index No. 613)	10	EA/DY		$ -
4	Multi Lane, Intersection (FDOT Index No. 615)	10	EA/DY		$ -
5	Arrow Boards - 5' Minimum Horizontal Size	10	EA/DY		$ -
6	Variable Message Board	10	EA/DY		$ -
7	Concrete Barrier (FDOT Index No. 100)	10	EA/DY		$ -
8	Low Profile Barrier (FDOT Index No. 120)	10	EA/DY		$ -
9	Signs in Work Zones	10	EA/DY		$ -
10	6" Solid line Thermo Plastic - Permanent	200	LF		$ -
11	24" Stop Bar, Solid, Thermo Plastic, Perm.	200	LF		$ -
12	6" Skip line (6'-10' Skip) Thermo Plastic-Perm.	200	LF		$ -
13	Barricades Type III, with Warning Lights	1000	EA/DY		$ -
14	Barricades Type I or II, with Warning Lights	1000	EA/DY		$ -
15	Repair Manhole Bench and Channel	10	EA		$ -
16	Repair Chimney, Adjust/Replace MH Casting- Unpaved	10	EA		$ -
17	Repair Chimney, Adjust/Replace MH Casting- Asphalt Pavement	100	EA		$ -
18	Rebuild Corbel/Chimney for Type B Manhole Casting	10	EA		$ -
19	Furnish Manhole Casting - Type B	10	EA		$ -
20	Furnish Manhole Casting - Type E	30	EA		$ -
21	Severe Manhole Infiltration Elimination	10	EA		$ -
22	Chemical Sealing - Grout	50	GAL		$ -
23	Internal Chimney Sealant - Type B Manhole Casing	5	EA		$ -
24	Internal Chimney Sealant - Type E Manhole Casing	10	EA		$ -
25	Additional Access Cost for Manhole Coating	10	EA		$ -
26	Bypass Pumping Setup - 6-10" diameter	5	EA		$ -
27	Bypass Pumping Setup - 12" -14" diameter	20	EA		$ -
28	Bypass Pumping Setup - 15" to 21" diameter	10	EA		$ -
29	Bypass Pumping Setup - 24" diameter	5	EA		$ -
30	Bypass Pumping Operation - 6"-10" diameter	10	DAY		$ -
31	Bypass Pumping Operation - 12"-14" diameter	50	DAY		$ -
32	Bypass Pumping Operation - 15" to 21" diameter	25	DAY		$ -
33	Bypass Pumping Operation - 24" diameter	15	DAY		$ -
34	Pure Calcium Aluminate Cementitious MH Coating - 48" diameter, Initial	50	EA		$ -
35	Pure Calcium Aluminate Cementitious MH Coating - 60" diameter, Initial	10	EA		$ -
36	Pure Calcium Aluminate Cementitious MH Coating - 72" diameter, Initial	5	EA		$ -
37	Pure Calcium Aluminate Cementitious MH Coating - 48" diameter, Additional	250	VF		$ -
38	Pure Calcium Aluminate Cementitious MH Coating - 60" diameter, Additional	50	VF		$ -
39	Pure Calcium Aluminate Cementitious MH Coating - 72" diameter, Additional	25	VF		$ -
40	Reinforced Polymer MH Coating - 48" diameter, Initial	5	EA		$ -
41	Reinforced Polymer MH Coating - 60" diameter, Initial	5	EA		$ -
42	Reinforced Polymer MH Coating - 72" diameter, Initial	5	EA		$ -
43	Reinforced Polymer MH Coating - 48" diameter, Additional	25	VF		$ -
44	Reinforced Polymer MH Coating - 60" diameter, Additional	25	VF		$ -
45	Reinforced Polymer MH Coating - 72" diameter, Additional	25	VF		$ -
46	Concrete Curb Replacement - Type D	100	LF		$ -
47	Concrete Curb Replacement - Type F	100	LF		$ -
48	Concrete Curb Replacement - Miami Curb	100	LF		$ -
49	Concrete Sidewalk Replacement - 4" Thick	50	SY		$ -
50	Concrete Sidewalk Replacement - 6" Thick	50	SY		$ -
51	Concrete Driveway Replacement - 4" Thick	50	SY		$ -
52	Concrete Driveway Replacement - 6" Thick	50	SY		$ -
53	Inflow Dish	100	EA		$ -
				SUBTOTAL - MANHOLE REHABILITATION	$ -
PIPE LINING					
1	Mobilization	1	EA		$ -
2	Flagmen (Per-Flagmen)	20	HR		$ -
3	Multi Lane, Lane Closures (FDOT Index No. 613)	10	EA/DY		$ -
4	Multi Lane, Intersection (FDOT Index No. 615)	10	EA/DY		$ -

5	Arrow Boards - 5' Minimum Horizontal Size	10	EA/DY		$	-
6	Variable Message Board	10	EA/DY		$	-
7	Concrete Barrier (FDOT Index No. 100)	10	EA/DY		$	-
8	Low Profile Barrier (FDOT Index No. 120)	10	EA/DY		$	-
9	Signs in Work Zones	10	EA/DY		$	-
10	6" Solid line Thermo Plastic - Permanent	200	LF		$	-
11	24" Stop Bar, Solid, Thermo Plastic, Perm.	200	LF		$	-
12	6" Skip line (6'-10' Skip) Thermo Plastic-Perm.	200	LF		$	-
13	Barricades Type III, with Warning Lights	1000	EA/DY		$	-
14	Barricades Type I or II, with Warning Lights	1000	EA/DY		$	-
15	CIPP Main Liner 6" Diameter - 4.5 mm thickness	1100	LF		$	-
16	CIPP Main Liner 8" Diameter - 6.0 mm thickness	72200	LF		$	-
17	CIPP Main Liner 10" Diameter - 6.0 mm thickness	3600	LF		$	-
18	CIPP Main Liner 12" Diameter - 6.0 mm thickness	2400	LF		$	-
19	CIPP Main Liner 15" Diameter - 7.5 mm thickness	1500	LF		$	-
20	CIPP Main Liner 18" Diameter - 9.0 mm thickness	1800	LF		$	-
21	CIPP Main Liner 21" Diameter - 9.0 mm thickness	2900	LF		$	-
22	CIPP Main Liner 24" Diameter - 10.5 mm thickness	3800	LF		$	-
23	CIPP Main Liner 6" Diameter - Thickness Variance + 1.5mm	300	LF		$	-
24	CIPP Main Liner 8" Diameter - Thickness Variance + 1.5mm	5000	LF		$	-
25	CIPP Main Liner 10" Diameter - Thickness Variance + 1.5mm	1000	LF		$	-
26	CIPP Main Liner 12" Diameter - Thickness Variance + 1.5mm	1000	LF		$	-
27	CIPP Main Liner 15" Diameter - Thickness Variance + 1.5mm	300	LF		$	-
28	CIPP Main Liner 18" Diameter - Thickness Variance + 1.5mm	300	LF		$	-
29	CIPP Main Liner 21" Diameter - Thickness Variance + 1.5mm	300	LF		$	-
30	CIPP Main Liner 24" Diameter - Thickness Variance + 1.5mm	300	LF		$	-
31	Bypass Pumping Setup - 6-10" diameter	5	EA		$	-
32	Bypass Pumping Setup - 12" -14" diameter	45	EA		$	-
33	Bypass Pumping Setup - 15" to 21" diameter	20	EA		$	-
34	Bypass Pumping Setup - 24" diameter	5	EA		$	-
35	Bypass Pumping Operation - 6"-10" diameter	10	DAY		$	-
36	Bypass Pumping Operation - 12"-14" diameter	90	DAY		$	-
37	Bypass Pumping Operation - 15" to 21" diameter	40	DAY		$	-
38	Bypass Pumping Operation - 24" diameter	10	DAY		$	-
39	Normal Cleaning - 6" and 8" diameter	73300	LF		$	-
40	Normal Cleaning - 10" and 12" diameter	6000	LF		$	-
41	Normal Cleaning - 15" and 18" diameter	3300	LF		$	-
42	Normal Cleaning - 21" and 24" diameter	6700	LF		$	-
43	Specialty Cleaning - 6" and 8" diameter	1000	LF		$	-
44	Specialty Cleaning - 10" and 12" diameter	100	LF		$	-
45	Specialty Cleaning - 15" and 18" diameter	50	LF		$	-
46	Specialty Cleaning - 21" and 24" diameter	100	LF		$	-
47	Chemical Sealing of Host Pipe - 10" diameter and less	30	EA		$	-
48	Chemical Sealing of Host Pipe - 12" and 15" diameter	10	EA		$	-
49	Chemical Sealing of Host Pipe - 18" to 24" diameter	5	EA		$	-
50	Chemical Sealing - Grout	100	GAL		$	-
51	Removal & Sealing of Protruding Service Connections	25	EA		$	-
52	Additional Access Cost Main Liner	25	EA		$	-
53	Service Reconnection	200	EA		$	-
54	CIPP Liner Testing	5	EA		$	-
55	Lateral Grouting	10	EA		$	-
				SUBTOTAL - PIPE LINING	$	-
POINT REPAIRS						
1	Mobilization for Routine Response	20	EA		$	-
2	Mobilization for Emergency Response	6	EA		$	-
3	Flagmen (Per-Flagmen)	20	HR		$	-
4	Multi Lane, Lane Closures (FDOT Index No. 613)	5	EA/DY		$	-
5	Multi Lane, Intersection (FDOT Index No. 615)	5	EA/DY		$	-
6	Arrow Boards - 5' Minimum Horizontal Size	10	EA/DY		$	-
7	Variable Message Board	10	EA/DY		$	-
8	Concrete Barrier (FDOT Index No. 415)	10	EA/DY		$	-
9	Low Profile Barrier (FDOT Index No. 412)	10	EA/DY		$	-
10	Signs in Work Zones	10	EA/DY		$	-

11	6" Solid line Thermo Plastic - Permanent	200	LF		$	-
12	24" Stop Bar, Solid, Thermo Plastic, Perm.	200	LF		$	-
13	6" Skip line (6'-10' Skip) Thermo Plastic-Perm.	200	LF		$	-
14	Barricades Type III, with Warning Lights	1000	EA/DY		$	-
15	Barricades Type I or II, with Warning Lights	1000	EA/DY		$	-
16	As-Built Survey	5	EA		$	-
17	Excavation, Unsuitable Material	100	CY		$	-
18	Sheeting & Bracing (Left in Place)	500	SF		$	-
19	Sheeting & Bracing, Pipe Trenches (Removed)	2500	SF		$	-
20	Well Point Dewatering Initial - 6'-8' Deep	10	EA		$	-
21	Well Point Dewatering Initial - 8'-10' Deep	10	EA		$	-
22	Well Point Dewatering Initial - 10'-12' Deep	5	EA		$	-
23	Well Point Dewatering Initial - 12'-14' Deep	5	EA		$	-
24	Well Point Dewatering Initial - 14'-16' Deep	3	EA		$	-
25	Well Point Dewatering Initial - > 16' Deep	3	EA		$	-
26	Well Point Dewatering Additional - 6'-8' Deep	200	EA		$	-
27	Well Point Dewatering Additional - 8'-10' Deep	200	EA		$	-
28	Well Point Dewatering Additional - 10'-12' Deep	100	EA		$	-
29	Well Point Dewatering Additional - 12'-14' Deep	100	EA		$	-
30	Well Point Dewatering Additional - 14'-16' Deep	50	EA		$	-
31	Well Point Dewatering Additional - > 16' Deep	50	EA		$	-
32	Jack & Bore 12" x .188" Steel Casing (6" GS)	40	LF		$	-
33	Jack & Bore 16" x .219" Steel Casing (8" GS)	40	LF		$	-
34	Jack & Bore 20" x .250" Steel Casing (10" GS)	40	LF		$	-
35	Jack & Bore 24" x .281" Steel Casing (12" GS)	40	LF		$	-
36	2" Directional Drill HDPE DR 9, IPS OD	200	LF		$	-
37	4" Directional Drill HDPE DR 11, DIPS OD	300	LF		$	-
38	6" Directional Drill HDPE DR 11, DIPS OD	500	LF		$	-
39	8" Directional Drill HDPE DR 11, DIPS OD	500	LF		$	-
40	10" Directional Drill HDPE DR 11, DIPS OD	500	LF		$	-
41	12" Directional Drill HDPE DR 11, DIPS OD	300	LF		$	-
42	6" PVC Pipe, C-900 DR 18 (Gravity Sewer) 0' - 6' Depth	100	LF		$	-
43	6" PVC Pipe, C-900 DR 18 (Gravity Sewer) 6' - 8' Depth	200	LF		$	-
44	6" PVC Pipe, C-900 DR 18 (Gravity Sewer) 8' - 10' Depth	100	LF		$	-
45	6" PVC Pipe, C-900 DR 18 (Gravity Sewer) 10' - 12' Depth	50	LF		$	-
46	6" PVC Pipe, C-900 DR 18 (Gravity Sewer) 12' - 14' Depth	50	LF		$	-
47	6" PVC Pipe, C-900 DR 18 (Gravity Sewer) 14' - 16' Depth	50	LF		$	-
48	6" PVC Pipe, C-900 DR 18 (Gravity Sewer) 16' - 18' Depth	50	LF		$	-
49	8" DI Pipe, CL 350 (Gravity Sewer) 0' - 6' Depth	50	LF		$	-
50	8" DI Pipe, CL 350 (Gravity Sewer) 6' - 8' Depth	100	LF		$	-
51	8" DI Pipe, CL 350 (Gravity Sewer) 8' - 10' Depth	100	LF		$	-
52	8" DI Pipe, CL 350 (Gravity Sewer) 10' - 12' Depth	50	LF		$	-
53	8" DI Pipe, CL 350 (Gravity Sewer) 12' - 14' Depth	50	LF		$	-
54	8" DI Pipe, CL 350 (Gravity Sewer) 14' - 16' Depth	50	LF		$	-
55	8" DI Pipe, CL 350 (Gravity Sewer) 16' - 18' Depth	50	LF		$	-
56	8" PVC Pipe, C-900 DR 18 (Gravity Sewer) 0' - 6' Depth	200	LF		$	-
57	8" PVC Pipe, C-900 DR 18 (Gravity Sewer) 6' - 8' Depth	400	LF		$	-
58	8" PVC Pipe, C-900 DR 18 (Gravity Sewer) 8' - 10' Depth	400	LF		$	-
59	8" PVC Pipe, C-900 DR 18 (Gravity Sewer) 10' - 12' Depth	400	LF		$	-
60	8" PVC Pipe, C-900 DR 18 (Gravity Sewer) 12' - 14' Depth	400	LF		$	-
61	8" PVC Pipe, C-900 DR 18 (Gravity Sewer) 14' - 16' Depth	200	LF		$	-
62	8" PVC Pipe, C-900 DR 18 (Gravity Sewer) 16' - 18' Depth	200	LF		$	-
63	10" DI Pipe, CL 350 (Gravity Sewer) 0' - 6' Depth	50	LF		$	-
64	10" DI Pipe, CL 350 (Gravity Sewer) 6' - 8' Depth	100	LF		$	-
65	10" DI Pipe, CL 350 (Gravity Sewer) 8' - 10' Depth	100	LF		$	-
66	10" DI Pipe, CL 350 (Gravity Sewer) 10' - 12' Depth	50	LF		$	-
67	10" DI Pipe, CL 350 (Gravity Sewer) 12' - 14' Depth	50	LF		$	-
68	10" DI Pipe, CL 350 (Gravity Sewer) 14' - 16' Depth	50	LF		$	-
69	10" DI Pipe, CL 350 (Gravity Sewer) 16' - 18' Depth	50	LF		$	-
70	10" PVC Pipe, C-900 DR 18 (Gravity Sewer) 0' -6' Depth	100	LF		$	-
71	10" PVC Pipe, C-900 DR 18 (Gravity Sewer) 6' - 8' Depth	400	LF		$	-
72	10" PVC Pipe, C-900 DR 18 (Gravity Sewer) 8' - 10' Depth	400	LF		$	-
73	10" PVC Pipe, C-900 DR 18 (Gravity Sewer) 10' - 12' Depth	400	LF		$	-

74	10" PVC Pipe, C-900 DR 18 (Gravity Sewer) 12' - 14' Depth	400	LF		$	-
75	10" PVC Pipe, C-900 DR 18 (Gravity Sewer) 14' - 16' Depth	200	LF		$	-
76	10" PVC Pipe, C-900 DR 18 (Gravity Sewer) 16' - 18' Depth	200	LF		$	-
77	12" DI Pipe, CL 350 (Gravity Sewer) 0' - 6' Depth	50	LF		$	-
78	12" DI Pipe, CL 350 (Gravity Sewer) 6' - 8' Depth	100	LF		$	-
79	12" DI Pipe, CL 350 (Gravity Sewer) 8' - 10' Depth	100	LF		$	-
80	12" DI Pipe, CL 350 (Gravity Sewer) 10' - 12' Depth	100	LF		$	-
81	12" DI Pipe, CL 350 (Gravity Sewer) 12' - 14' Depth	100	LF		$	-
82	12" DI Pipe, CL 350 (Gravity Sewer) 14' - 16' Depth	50	LF		$	-
83	12" DI Pipe, CL 350 (Gravity Sewer) 16' - 18' Depth	50	LF		$	-
84	12" PVC Pipe, C-900 DR 18 (Gravity Sewer) 0' ' 6' Depth	100	LF		$	-
85	12" PVC Pipe, C-900 DR 18 (Gravity Sewer) 6' - 8' Depth	200	LF		$	-
86	12" PVC Pipe, C-900 DR 18 (Gravity Sewer) 8' - 10' Depth	200	LF		$	-
87	12" PVC Pipe, C-900 DR 18 (Gravity Sewer) 10' - 12' Depth	100	LF		$	-
88	12" PVC Pipe, C-900 DR 18 (Gravity Sewer) 12' - 14' Depth	100	LF		$	-
89	12" PVC Pipe, C-900 DR 18 (Gravity Sewer) 14' - 16' Depth	50	LF		$	-
90	12" PVC Pipe, C-900 DR 18 (Gravity Sewer) 16' - 18' Depth	50	LF		$	-
91	16" DI Pipe, CL 350 (Gravity Sewer) 0' - 6' Depth	200	LF		$	-
92	16" DI Pipe, CL 350 (Gravity Sewer) 6' - 8' Depth	400	LF		$	-
93	16" DI Pipe, CL 350 (Gravity Sewer) 8' - 10' Depth	400	LF		$	-
94	16" DI Pipe, CL 350 (Gravity Sewer) 10' - 12' Depth	200	LF		$	-
95	16" DI Pipe, CL 350 (Gravity Sewer) 12' - 14' Depth	200	LF		$	-
96	16" DI Pipe, CL 350 (Gravity Sewer) 14' - 16' Depth	100	LF		$	-
97	16" DI Pipe, CL 350 (Gravity Sewer) 16' - 18' Depth	100	LF		$	-
98	16" PVC Pipe, C-905 DR 18 (Gravity Sewer) 0' - 6' Depth	100	LF		$	-
99	16" PVC Pipe, C-905 DR 18 (Gravity Sewer) 6' - 8' Depth	200	LF		$	-
100	16" PVC Pipe, C-905 DR 18 (Gravity Sewer) 8' - 10' Depth	200	LF		$	-
101	16" PVC Pipe, C-905 DR 18 (Gravity Sewer) 10' - 12' Depth	100	LF		$	-
102	16" PVC Pipe, C-905 DR 18 (Gravity Sewer) 12' - 14' Depth	100	LF		$	-
103	16" PVC Pipe, C-905 DR 18 (Gravity Sewer) 14' - 16' Depth	50	LF		$	-
104	16" PVC Pipe, C-905 DR 18 (Gravity Sewer) 16' - 18' Depth	50	LF		$	-
105	18" DI Pipe, CL 350 (Gravity Sewer) 0' - 6' Depth	200	LF		$	-
106	18" DI Pipe, CL 350 (Gravity Sewer) 6' - 8' Depth	400	LF		$	-
107	18" DI Pipe, CL 350 (Gravity Sewer) 8' - 10' Depth	400	LF		$	-
108	18" DI Pipe, CL 350 (Gravity Sewer) 10' - 12' Depth	200	LF		$	-
109	18" DI Pipe, CL 350 (Gravity Sewer) 12' - 14' Depth	200	LF		$	-
110	18" DI Pipe, CL 350 (Gravity Sewer) 14' - 16' Depth	100	LF		$	-
111	18" DI Pipe, CL 350 (Gravity Sewer) 16' - 18' Depth	100	LF		$	-
112	18" PVC Pipe, C-905 DR 21 (Gravity Sewer) 0' - 6' Depth	100	LF		$	-
113	18" PVC Pipe, C-905 DR 21 (Gravity Sewer) 6' - 8' Depth	200	LF		$	-
114	18" PVC Pipe, C-905 DR 21 (Gravity Sewer) 8' - 10' Depth	200	LF		$	-
115	18" PVC Pipe, C-905 DR 21 (Gravity Sewer) 10' - 12' Depth	100	LF		$	-
116	18 PVC Pipe, C-905 DR 21 (Gravity Sewer) 12' - 14' Depth	100	LF		$	-
117	18" PVC Pipe, C-905 DR 21 (Gravity Sewer) 14' - 16' Depth	50	LF		$	-
118	18" PVC Pipe, C-905 DR 21 (Gravity Sewer) 16' - 18' Depth	50	LF		$	-
119	21" DI Pipe, CL 350 (Gravity Sewer) 0' - 6' Depth	200	LF		$	-
120	21" DI Pipe, CL 350 (Gravity Sewer) 6' - 8' Depth	400	LF		$	-
121	21" DI Pipe, CL 350 (Gravity Sewer) 8' - 10' Depth	400	LF		$	-
122	21" DI Pipe, CL 350 (Gravity Sewer) 10' - 12' Depth	200	LF		$	-
123	21" DI Pipe, CL 350 (Gravity Sewer) 12' - 14' Depth	200	LF		$	-
124	21" DI Pipe, CL 350 (Gravity Sewer) 14' - 16' Depth	100	LF		$	-
125	21" DI Pipe, CL 350 (Gravity Sewer) 16' - 18' Depth	100	LF		$	-
126	21" PVC Pipe, C-905 DR 21 (Gravity Sewer) 0' - 6' Depth	100	LF		$	-
127	21" PVC Pipe, C-905 DR 21 (Gravity Sewer) 6' - 8' Depth	200	LF		$	-
128	21" PVC Pipe, C-905 DR 21 (Gravity Sewer) 8' - 10' Depth	200	LF		$	-
129	21" PVC Pipe, C-905 DR 21 (Gravity Sewer) 10' - 12' Depth	100	LF		$	-
130	21" PVC Pipe, C-905 DR 21 (Gravity Sewer) 12' - 14' Depth	100	LF		$	-
131	21" PVC Pipe, C-905 DR 21 (Gravity Sewer) 14' - 16' Depth	50	LF		$	-
132	21" PVC Pipe, C-905 DR 21 (Gravity Sewer) 16' - 18' Depth	50	LF		$	-
133	24" DI Pipe, CL 350 (Gravity Sewer) 0' - 6' Depth	200	LF		$	-
134	24" DI Pipe, CL 350 (Gravity Sewer) 6' - 8' Depth	400	LF		$	-
135	24" DI Pipe, CL 350 (Gravity Sewer) 8' - 10' Depth	400	LF		$	-
136	24" DI Pipe, CL 350 (Gravity Sewer) 10' - 12' Depth	200	LF		$	-

137	24" DI Pipe, CL 350 (Gravity Sewer) 12' - 14' Depth	200	LF		$	-
138	24" DI Pipe, CL 350 (Gravity Sewer) 14' - 16' Depth	100	LF		$	-
139	24" DI Pipe, CL 350 (Gravity Sewer) 16' - 18' Depth	100	LF		$	-
140	24" PVC Pipe, C-905 DR 21 (Gravity Sewer) 0' - 6' Depth	100	LF		$	-
141	24" PVC Pipe, C-905 DR 21 (Gravity Sewer) 6' - 8' Depth	200	LF		$	-
142	24" PVC Pipe, C-905 DR 21 (Gravity Sewer) 8' - 10' Depth	200	LF		$	-
143	24" PVC Pipe, C-905 DR 21 (Gravity Sewer) 10' - 12' Depth	100	LF		$	-
144	24" PVC Pipe, C-905 DR 21 (Gravity Sewer) 12' - 14' Depth	100	LF		$	-
145	24" PVC Pipe, C-905 DR 21 (Gravity Sewer) 14' - 16' Depth	50	LF		$	-
146	24" PVC Pipe, C-905 DR 21 (Gravity Sewer) 16' - 18' Depth	50	LF		$	-
147	Install PVC Cleanout	10	EA		$	-
148	Replace PVC Cleanout with Manhole Structure	10	EA		$	-
149	Remove Pipe 2" or 4" (Gravity Sewer)	200	LF		$	-
150	Remove Pipe 6" or 8" (Gravity Sewer)	400	LF		$	-
151	Remove Pipe 10" or 12" (Gravity Sewer)	400	LF		$	-
152	Remove Pipe 15", 16" or 18" (Gravity Sewer)	200	LF		$	-
153	Remove Pipe 21" or 24" (Gravity Sewer)	200	LF		$	-
154	4" Pipe - Install or Adjust Service Lateral 0'-6' Deep	3	EA		$	-
155	4" Pipe - Install or Adjust Service Lateral 6'-8' Deep	3	EA		$	-
156	4" Pipe - Install or Adjust Service Lateral 8'-10' Deep	3	EA		$	-
157	4" Pipe - Install or Adjust Service Lateral 10'-12'Deep	3	EA		$	-
158	4" Pipe - Install or Adjust Service Lateral 12'-14'Deep	2	EA		$	-
159	4" Pipe - Install or Adjust Service Lateral 14'-16'Deep	2	EA		$	-
160	4" Pipe - Install or Adjust Service Lateral 16'-18' Deep	2	EA		$	-
161	6" Pipe - Install or Adjust Service Lateral 0'-6' Deep	3	EA		$	-
162	6" Pipe - Install or Adjust Service Lateral 6'-8' Deep	3	EA		$	-
163	6" Pipe - Install or Adjust Service Lateral 8'-10' Deep	3	EA		$	-
164	6" Pipe - Install or Adjust Service Lateral 10'-12' Deep	3	EA		$	-
165	6" Pipe - Install or Adjust Service Lateral 12'-14' Deep	2	EA		$	-
166	6" Pipe - Install or Adjust Service Lateral 14'-16' Deep	2	EA		$	-
167	6" Pipe - Install or Adjust Service Lateral 16'-18' Deep	2	EA		$	-
168	2" Sewer Line Manhole Connection	3	EA		$	-
169	4" Sewer Line Manhole Connection	3	EA		$	-
170	6" Sewer Line Manhole Connection	5	EA		$	-
171	8" Sewer Line Manhole Connection	5	EA		$	-
172	10" Sewer Line Manhole Connection	3	EA		$	-
173	12" Sewer Line Manhole Connection	3	EA		$	-
174	16" Sewer Line Manhole Connection	3	EA		$	-
175	18" Sewer Line Manhole Connection	2	EA		$	-
176	21” Sewer Line Manhole Connection	2	EA		$	-
177	24” Sewer Line Manhole Connection	2	EA		$	-
178	2" Inside Drop Connection	3	EA		$	-
179	4" Inside Drop Connection	3	EA		$	-
180	6" Inside Drop Connection	3	EA		$	-
181	8" Inside Drop Connection	5	EA		$	-
182	10" Inside Drop Connection	3	EA		$	-
183	12" Inside Drop Connection	3	EA		$	-
184	15"/16" Inside Drop Connection	3	EA		$	-
185	18" Inside Drop Connection	2	EA		$	-
186	21" Inside Drop Connection	3	EA		$	-
187	24" Inside Drop Connection	2	EA		$	-
188	Grouting Out of Service Pipe (Force Main)	30	CY		$	-
189	Disconnect & Plug 2" or 4" Pipe	5	EA		$	-
190	Disconnect & Plug 6" or 8" Pipe	5	EA		$	-
191	Disconnect & Plug 10" or 12" Pipe	5	EA		$	-
192	2" PVC Restrained Joint Pipe & Fittings FM, SDR 21	200	LF		$	-
193	4" PVC Pipe, C-900 DR 18 (Force Main)	500	LF		$	-
194	4" PVC Restrained Joint Pipe & Fittings FM, C-900 DR 18	100	LF		$	-
195	6" PVC Pipe, C-900 DR 18 (Force Main)	500	LF		$	-
196	6" PVC Restrained Joint Pipe & Fittings FM, C-900 DR 18	100	LF		$	-
197	8" PVC Pipe, C-900 DR 18 (Force Main)	500	LF		$	-
198	8" PVC Restrained Joint Pipe & Fittings FM, C-900 DR 18	100	LF		$	-
199	10" PVC Pipe, C-900 DR 18 (Force Main)	500	LF		$	-

200	10" PVC Restrained Joint Pipe & Fittings FM, C-900 DR 18	100	LF		$	-
201	12" PVC Pipe, C-900 DR 18 (Force Main)	300	LF		$	-
202	12" PVC Restrained Joint Pipe & Fittings FM, C-900 DR 18	100	LF		$	-
203	2" Restrained Joints	20	EA		$	-
204	4" Restrained Joints	20	EA		$	-
205	6" Restrained Joints	20	EA		$	-
206	8" Restrained Joints	20	EA		$	-
207	10" Restrained Joints	20	EA		$	-
208	12" Restrained Joints	20	EA		$	-
209	2"-4" Forcemain Pipe and Appurtenances - Over Depth Excavation	400	LF		$	-
210	6"-8" Forcemain Pipe and Appurtenances - Over Depth Excavation	500	LF		$	-
211	10"-12" Forcemain Pipe and Appurtenances - Over Depth Excavation	200	LF		$	-
212	Remove Out of Service Pipe 2" or 4" (Force Main)	500	LF		$	-
213	Remove Out of Service Pipe 6" or 8" (Force Main)	1000	LF		$	-
214	Remove Out of Service Pipe 10" or 12" (Force Main)	500	LF		$	-
215	2" Sleeved Connection	6	EA		$	-
216	4" Sleeved Connection	6	EA		$	-
217	6" Sleeved Connection	10	EA		$	-
218	8" Sleeved Connection	10	EA		$	-
219	10" Sleeved Connection	4	EA		$	-
220	12" Sleeved Connection	4	EA		$	-
221	Reverse Deadman for 2" or 4" Pipe	3	EA		$	-
222	Reverse Deadman for 6" or 8" Pipe	5	EA		$	-
223	Reverse Deadman for 10" or 12" Pipe	3	EA		$	-
224	DI Fittings FM C 153 (Compact Body)	2	TN		$	-
225	2" Air Release Assembly (In-line)	2	EA		$	-
226	2" Air Release Assembly (Offset)	2	EA		$	-
227	2" RWGV (Resilient Wedge Gate Valve) & Box	4	EA		$	-
228	4" RWGV & Box C 515	4	EA		$	-
229	6" RWGV & Box C 515	10	EA		$	-
230	8" RWGV & Box C 515	5	EA		$	-
231	10" RWGV & Box C 515	2	EA		$	-
232	12" RWGV & Box C 515	2	EA		$	-
233	Adjust Valve Box to Finished Grade (In Pavement)	5	EA		$	-
234	Adjust Valve Box to Finished Grade (Outside of Pavement)	5	EA		$	-
235	4" Line Stop	1	EA		$	-
236	6" Line Stop	1	EA		$	-
237	8" Line Stop	1	EA		$	-
238	10" Line Stop	1	EA		$	-
239	12" Line Stop	1	EA		$	-
240	4" x 2" Tapping Saddle Valve & Box	2	EA		$	-
241	4" x 4" Tapping Sleeve Valve & Box	2	EA		$	-
242	6" x 2" Tapping Saddle Valve & Box	2	EA		$	-
243	6" x 4" Tapping Sleeve Valve & Box	2	EA		$	-
244	6" x 6" Tapping Sleeve Valve & Box	2	EA		$	-
245	8" x 2" Tapping Saddle Valve & Box	2	EA		$	-
246	8" x 4" Tapping Sleeve Valve & Box	2	EA		$	-
247	8" x 6" Tapping Sleeve Valve & Box	2	EA		$	-
248	8" x 8" Tapping Sleeve Valve & Box	2	EA		$	-
249	10" x 2" Tapping Saddle Valve & Box	2	EA		$	-
250	10" x 4" Tapping Sleeve Valve & Box	2	EA		$	-
251	10" x 6" Tapping Sleeve Valve & Box	2	EA		$	-
252	10" x 8" Tapping Sleeve Valve & Box	2	EA		$	-
253	10" x 10" Tapping Sleeve Valve & Box	2	EA		$	-
254	12" x 2" Tapping Saddle Valve & Box	2	EA		$	-
255	12" x 4" Tapping Sleeve Valve & Box	2	EA		$	-
256	12" x 6" Tapping Sleeve Valve & Box	2	EA		$	-
257	12" x 8" Tapping Sleeve Valve & Box	2	EA		$	-
258	12" x 10" Tapping Sleeve Valve & Box	2	EA		$	-
259	12" x 12" Tapping Sleeve Valve & Box	2	EA		$	-
260	4' Dia. - Precast Manhole Standard	30	VF		$	-
261	4' Dia. - Precast Manhole Inside Drop	10	VF		$	-
262	4' Dia. - Precast Manhole Outside Drop	10	VF		$	-

263	5' Dia. - Precast Manhole Standard	30	VF		$	-
264	5' Dia. - Precast Manhole Inside Drop	10	VF		$	-
265	5' Dia. - Precast Manhole Outside Drop	10	VF		$	-
266	5' Dia. - Precast Air Release Manhole	10	VF		$	-
267	6' Dia. - Precast Manhole Standard	30	VF		$	-
268	6' Dia. - Precast Manhole Inside Drop	10	VF		$	-
269	6' Dia. - Precast Manhole Outside Drop	10	VF		$	-
270	Removal of Existing Manhole	3	EA		$	-
271	Remove Existing Manhole Additional	30	VF		$	-
272	Initial Excavation - 0'-6' Deep	5	EA		$	-
273	Initial Excavation - 6'-8' Deep	6	EA		$	-
274	Initial Excavation - 8'-10' Deep	6	EA		$	-
275	Initial Excavation - 10'-12' Deep	6	EA		$	-
276	Initial Excavation - 12'-14' Deep	3	EA		$	-
277	Initial Excavation - 14'-16' Deep	3	EA		$	-
278	Initial Excavation - 16'-18' Deep	2	EA		$	-
279	Initial Excavation - 18'-20' Deep	2	EA		$	-
280	Additional Excavation - 0'-6' Deep	100	LF		$	-
281	Additional Excavation - 6'-8' Deep	100	LF		$	-
282	Additional Excavation - 8'-10' Deep	100	LF		$	-
283	Additional Excavation - 10'-12' Deep	100	LF		$	-
284	Additional Excavation - 12'-14' Deep	100	LF		$	-
285	Additional Excavation - 14'-16' Deep	100	LF		$	-
286	Additional Excavation - 16'-18' Deep	50	LF		$	-
287	Additional Excavation - 18'-20' Deep	50	LF		$	-
288	Wastewater Bypass Pumping, Set up, 6" - 10" diameter	5	EA		$	-
289	Wastewater Bypass Pumping, Set up, 12" - 14" diameter	2	EA		$	-
290	Wastewater Bypass Pumping, Set up, 15" - 21" diameter	2	EA		$	-
291	Wastewater Bypass Pumping, Set up, 24" diameter	2	EA		$	-
292	Wastewater Bypass Pumping, Operation, 6" - 10" diameter	10	DAY		$	-
293	Wastewater Bypass Pumping, Operation, 12" - 14" diameter	5	DAY		$	-
294	Wastewater Bypass Pumping, Operation, 15" - 21" diameter	5	DAY		$	-
295	Wastewater Bypass Pumping, Operation, 24" diameter	2	DAY		$	-
296	6" Dia. Pipe Gravity Sewer Point Repair (DI Replacement Pipe)	2	EA		$	-
297	6" Dia. Pipe Gravity Sewer Point Repair (PVC Replacement Pipe)	5	EA		$	-
298	8" Dia. Pipe Gravity Sewer Point Repair (DI Replacement Pipe)	2	EA		$	-
299	8" Dia. Pipe Gravity Sewer Point Repair (PVC Replacement Pipe)	5	EA		$	-
300	10" Dia. Pipe Gravity Sewer Point Repair (DI Replacement Pipe)	2	EA		$	-
301	10" Dia. Pipe Gravity Sewer Point Repair (PVC Replacement Pipe)	5	EA		$	-
302	12" Dia. Pipe Gravity Sewer Point Repair (DI Replacement Pipe)	2	EA		$	-
303	12" Dia. Pipe Gravity Sewer Point Repair (PVC Replacement Pipe)	5	EA		$	-
304	15"/16" Dia. Pipe Gravity Sewer Point Repair (DI Replacement Pipe)	2	EA		$	-
305	15"/16" Dia. Pipe Gravity Sewer Point Repair (PVC Rplacement Pipe)	2	EA		$	-
306	18" Dia. Pipe Gravity Sewer Point Repair (DI Replacement Pipe)	2	EA		$	-
307	18" Dia. Pipe Gravity Sewer Point Repair (PVC Replacement Pipe)	2	EA		$	-
308	21" Dia. Pipe Gravity Sewer Point Repair (DI Replacement Pipe)	2	EA		$	-
309	21" Dia. Pipe Gravity Sewer Point Repair(PVC Replacement Pipe)	2	EA		$	-
310	24" Dia. Pipe Gravity Sewer Point Repair (DI Replacement Pipe)	2	EA		$	-
311	24" Dia. Pipe Gravity Sewer Point Repair (PVC Replacement Pipe)	2	EA		$	-
312	6" Dia. Pipe Gravity Sewer Point Repair - Additional Length (DI Replacement Pipe)	20	LF		$	-
313	6" Dia. Pipe Gravity Sewer Point Repair - Additional Length (PVC Replacement Pipe)	50	LF		$	-
314	8" Dia. Pipe Gravity Sewer Point Repair - Additional Length (DI Replacement Pipe)	20	LF		$	-
315	8" Dia. Pipe Gravity Sewer Point Repair - Additional Length (PVC Replacement Pipe)	100	LF		$	-
316	10" Dia. Pipe Gravity Sewer Point Repair - Additional Length (DI Replacement Pipe)	20	LF		$	-
317	10" Dia. Pipe Gravity Sewer Point Repair - Additional Length (PVC Replacement Pipe)	100	LF		$	-
318	12" Dia. Pipe Gravity Sewer Point Repair Additional Length (DI Replacement Pipe)	50	LF		$	-
319	12" Dia. Pipe Gravity Sewer Point Repair - Additional Length (PVC Replacement Pipe)	20	LF		$	-
320	15"/16" Dia. Pipe Gravity Sewer Point Repair - Additional Length (DI Replacement Pipe)	20	LF		$	-
321	15"/16" Dia. Pipe Gravity Sewer Point Repair - Additional Length (PVC Replacement Pipe)	50	LF		$	-
322	18" Dia. Pipe Gravity Sewer Point Repair - Additional Length (DI Replacement Pipe)	20	LF		$	-
323	18" Dia. Pipe Gravity Sewer Point Repair - Additional Length (PVC Replacement Pipe)	50	LF		$	-
324	21" Dia. Pipe Gravity Sewer Point Repair - Additional Length (DI Replacement Pipe)	20	LF		$	-
325	21" Dia. Pipe Gravity Sewer Point Repair - Additional Length (PVC Replacement Pipe)	50	LF		$	-

326	24" Dia. Pipe Gravity Sewer Point Repair - Additional Length (DI Replacement Pipe)	20	LF		$	-
327	24" Dia. Pipe Gravity Sewer Point Repair - Additional Length (PVC Replacement Pipe)	50	LF		$	-
328	2" Dia. Pipe Forcemain Point Repair	3	EA		$	-
329	4" Dia. Pipe Forcemain Point Repair	3	EA		$	-
330	6" Dia. Pipe Forcemain Point Repair	3	EA		$	-
331	8" Dia. Pipe Forcemain Point Repair	3	EA		$	-
332	10" Dia. Pipe Forcemain Point Repair	2	EA		$	-
333	12" Dia. Pipe Forcemain Point Repair	2	EA		$	-
334	Replace Manhole Ring & Cover (Asphalt Pavement)	5	EA		$	-
335	Replace Manhole Ring & Cover (Unpaved)	5	EA		$	-
336	Manhole Bench Replacement, 4' Diameter	2	EA		$	-
337	Manhole Bench Replacement, 5' Diameter	2	EA		$	-
338	Manhole Bench Replacement, 6' Diameter	2	EA		$	-
339	Adjust Manhole Ring & Cover to Finished Grade (In Pavement)	5	EA		$	-
340	Adjust Manhole Ring & Cover to Finished Grade (Outside of Pavement)	5	EA		$	-
341	Flowable Concrete Fill	100	CY		$	-
342	Roadway Base, Lime Rock, Primed, Min. LBR 100, Variable Thickness	120	CY		$	-
343	Roadway Base, Crushed Concrete/Graded Aggregate, Min. LBR 100, Variable Thickness	120	CY		$	-
344	Superpave Asphalt Base, Type B 12.5, Variable Thickness	50	TN		$	-
345	Superpave Asphalt Concrete, Type SP 9.5, Fine, Traffic Level C, Variable Thickness	100	TN		$	-
346	Superpave Asphalt Concrete, Type SP 12.5, Fine, Traffic Level C, Variable Thickness	100	TN		$	-
347	Pavement, Cement Concrete, 6" Min Thickness (Driveways)	100	SY		$	-
348	Pavement, Cement Concrete, 8" Thick	100	SY		$	-
349	Driveway Restoration, In Kind, Decorative Block	50	SY		$	-
350	Milling Existing Asphalt Pavement, 1/2" Average Depth	150	SY		$	-
351	Milling Existing Asphalt Pavement, 3/4" Average Depth	150	SY		$	-
352	Milling Existing Asphalt Pavement, 1" Average Depth	150	SY		$	-
353	Curb & Gutter, Concrete, FDOT Type D	100	LF		$	-
354	Curb & Gutter Concrete, FDOT Type F	100	LF		$	-
355	Curb & Gutter, Concrete, Miami Curb	300	LF		$	-
356	Valley Gutter, Concrete, PCED Index 1315	100	LF		$	-
357	Sidewalk, Concrete, 4" Min. Thickness, Remove and Replace	500	SF		$	-
358	Sidewalk, Concrete, 6" Min. Thickness, Remove and Replace	500	SF		$	-
359	Sodding	4500	SF		$	-
360	Sectional Liner, 6" - 24" Pipe	50	EA		$	-
				SUBTOTAL - POINT REPAIRS	$	-
				GRAND TOTAL	$	-

Bid quantities are for comparison purposes only.
This contract consists of various projects which are not yet defined and no quantities are guaranteed.

Docusign Envelope ID: AFCB16A4-B390-89EA-8013-04580053D90F

155 Corey Avenue
St. Pete Beach, FL 33706-1839
www.stpetebeach.org

ADDENDUM 1

Wastewater System Rehabilitation Services

Issued 3/23/2026

*Sealed bids must be received by **9:00 AM on 04/08/2026** electronically via Bonfire. Bids received after the deadline will not be accepted. They will be publicly opened and read at **10:00 AM on 04/08/2026**. All bidders are invited to attend this bid Opening.*

Addendum 1 includes:

Pre-bid Minutes
Questions and Answers

Docusign Envelope ID: AFCB16A4-B390-89EA-8013-04580053D90F

Optional - Pre-Bid Meeting Minutes
RFP: Wastewater System Rehab Services
March 18, 2026
11:00 AM

Staff Members Present:
Sara Spain, Procurement Manager
John Taylor, Assistant Finance Director
Camden Mills, Public Services Director
Brian Peckins, Assistant Public Services Director
Dejan Milosevic, Project Manager
Michael Weaver, Infrastructure Operations Manager
Brian Gelock, Public Services
Kenneth Kosbab, Public Services
Shawn Clark, Public Services
Ariana Wilson-Romo, Exec. Assistant City Clerk's Office

Others Present:

Name	***Company***	***Contact***
Abbey Boyle	PCS Civil	abbeyb@pcscivilinc.com
Chad Holmes	Tnemec	cholmes@tnemec.com
Chris Currie	Inliner Solutions	Chris.currie@puriscorp.com
Denise Davis	Gulf Coast Underground LLC	ddavis@gogcu.com
Tom Brown	Restoration & Protective Solutions	tom@rps.llc
Drew Giustina	Restoration & Protective Solutions	andrew@rps.llc
Emily Bennett	Insituform Technologies LLC	ebennett@azuria.com
Austen Wagoner	Engineered Coatings Solutions LLC	awagoner@ecscoatings.com
Tristan Hine	PCS Civil	tristanh@pcscivilinc.com
Kevin Rowland	Did not provide	Did not provide
Nolan Leal	Rowland DE LLC	nleal@acus-us.com
Mary Hortman	Inliner Solutions LLC	flbids@puriscorp.com
Sawyer Hill	Elite Industrial Painting Inc.	sawyer@eipainting.com
Kyle Matheny	Kimley Horn and Associates	Kyle.matheny@kimley-horn.com
Shawn Ready	Did not provide	Shawn.ready@vortexcompanies.com
Amanda Gonzalez	Kimley Horn and Associates	Amanda.gonzalez@kimley-horn.com
Bruno Sequeira	BCS Construction Group	bsequeira@bcsconstructiongrp.com
Bob Baker	Did not provide	Did not provide
Mark Cassineri	Inliner Solutions	Mark.cassineri@puriscorp.com
Shayna Agosta	Did not provide	sagosta@nwmcc.com

The meeting was called to order at 11:03 AM.

All attendees were present via Teams.

Ms. Spain briefly reviewed important dates and times which are as follows:

- Receipt of questions due 3/25 at 10AM
- Bids due 4/8 by 9AM
- Bid opening 4/8 at 10AM

Docusign Envelope ID: AFCB16A4-B390-89EA-8013-04580053D90F

She requested that any questions be submitted in writing to purchasing@stpetebeach.org. Questions will be answered via an addendum that will be posted to the City website and Bonfire.

Public Services Director Camden Mills summarized that this project will be for as-needed repairs to the City's wastewater collection system. Multiple vendors may be awarded.

The following questions were asked:
Q: Bid bond required? A: Will clarify via an addendum.
Q: Can previous bid tabulations for this project be shared? A:No bid tabs to provide, this is the first time the City has issued a project like this.
Q: Is there anticipated work already prepared? A: Yes, this can be shared via an addendum.
Q: Anticipated annual budget? A: Yes, will clarify in an addendum.
Q: Is there a self- performed percentage requirement? A: Will clarify via an addendum.
Q: Does the City need to be listed for proof of insurance? A: Yes.
Q: Can you provide the address exactly how it needs to be for the COIs? A: Yes.

Mr. Taylor clarified that this is bondable based on the project at that time, meaning a bid bond is not required to submit on this bid however it may be required based on project costs.

There being no additional questions, the meeting was adjourned at 11:16 AM.

Docusign Envelope ID: AFCB16A4-B390-89EA-8013-04580053D90F

Questions and Answers:

1. **Can you confirm if there are any DBE Requirements or good faith efforts to complete for this project? No. Because there are no federal funds nor does the City of St. Pete Beach include these requirements in the Procurement Ordinance, there are no DBE requirements.**
2. **Are there any SBEs/DBEs requirements? No. Because there are no federal funds nor does the City of St. Pete Beach include these requirements in the Procurement Ordinance, there are no SBE/DBE requirements.**
3. **Is a bid bond required? If so, what is the percentage? Yes, 5% of the total bid price.**
4. **What is the engineer's estimate / annual budget cost? Estimated $1,000,000 to $2,500,000 annually.**
5. **I was not able to locate a proposed budget for this project, would you happen to have that information available? Estimated $1,000,000 to $2,500,000 annually.**
6. **Are there any liquidated damages? Yes. If the work embraced by this Contract is not completed on or before the date set for completion or any extension thereof, the actual damages for the delay will be impossible to determine and in lieu thereof, the Contractor shall pay to the City fixed, agreed, and liquidated damages in the amount of either Five-Hundred Dollars ($500) per day for each calendar day of delay until the work is satisfactorily completed.**
7. **Hinterland Group respectfully request that Refratta's 100% pure-fused calcium aluminate coating be approved as an equal under that manhole rehabilitation specifications. Refratta's specs are attached for your review. The specifications for CIPP liner materials and manhole lining materials do not specify specific manufacturers and/or products for use under this contract. As specified in Specification Section 1.09, all materials, appliances, and types of construction shall be in accordance with the Technical Specifications.**
8. **Hinterland Group respectfully requests that Global Materials Company be approved as a CIPP liner manufacturer. Global specs are attached for your review. The specifications for CIPP liner materials and manhole lining materials do not specify specific manufacturers and/or products for use under this contract. As specified in Specification Section 1.09, all materials, appliances, and types of construction shall be in accordance with the Technical Specifications.**
9. **Is there a plan holders list for this project? Please see minutes with organizations present at the pre-bid meeting. The City of St. Pete Beach cannot see who has viewed the bid documents.**
10. **Do you have a plan holders list you could provide me for the above referenced bid? Please see minutes with organizations present at the pre-bid meeting. The City of St. Pete Beach cannot see who has viewed the bid documents.**
11. **Will the Owner/Engineer please provide a copy of the current plan holders list? Please see minutes with organizations present at the pre-bid meeting. The City of St. Pete Beach cannot see who has viewed the bid documents.**
12. **Will the Owner/Engineer please provide the anticipated annual spending for this contract to include each rehab division? Estimated $1,000,000 to $2,500,000 annually total.**
13. **Will the Engineer/Owner please provide previous itemized bid tabulation or contract pricing for each division/ contract? The City of St. Pete Beach does not have bid tabulations within the last 5 years.**
14. **Will the Owner/Engineer provide example work orders from previous contract periods? No.**

Docusign Envelope ID: AFCB16A4-B390-89EA-8013-04580053D90F

15. **Will the Owner provide a disposal site for pipe cleaning debris at no cost to the Contractor? Yes.**
16. **Will the Contractor be allowed to increase pricing from year 1 to subsequent years? Contract prices to remain firm through the first three contract years. Sixty days prior to the contract renewal date, contract/vendor may request a price adjustment.**
17. **Prebid question: Bid bond required? Yes, 5% of the total bid price.**
18. **Prebid question: Can previous bid tabulations for this project be shared? The City of St. Pete Beach does not have bid tabulations within the last 5 years.**
19. **Prebid question: Is there anticipated work already prepared? Bid form reflects anticipated work. City is underway with cleaning/televising entire wastewater collection system to analyze current conditions and will reprioritize if needed once that project is complete (estimated Dec 2026).**
20. **Prebid question: Anticipated annual budget? Estimated $1,000,000 to $2,500,000 annually.**
21. **Prebid question: Is there a self-performed percentage requirement? Yes, 100% Performance Bond.**
22. **Prebid question: Does the City need to be listed for proof of insurance? Yes**
23. **Prebid question: Can you provide the address exactly how it needs to be for the COIs?**
    City of St. Pete Beach
    155 Corey Avenue
    St. Pete Beach, FL 33706

Docusign Envelope ID: AFCB16A4-B390-89EA-8013-04580053D90F

155 Corey Avenue
St. Pete Beach, FL 33706-1839
www.stpetebeach.org

ADDENDUM 2

Wastewater System Rehabilitation Services

Issued 3/27/2026

*Sealed bids must be received by **9:00 AM on 04/08/2026** electronically via Bonfire. Bids received after the deadline will not be accepted. They will be publicly opened and read at **10:00 AM on 04/08/2026**. All bidders are invited to attend this bid Opening.*

Addendum 2 includes:

Questions and Answers

Docusign Envelope ID: AFCB16A4-B390-89EA-8013-04580053D90F

Questions and Answers:

1. **Is there a form to fill out for our sub-contractor for the bid submittal? Do I need to add anything for them with our bid? You are welcome to list them as a sub-contractor in your proposal, but there is no form. The sub-contractor is the contractor's financial responsibility.**

2. **Please clarify the Period of Performance in the General Contract Terms. This states base scope target completion of January 2027 while other parts of the RFP specify a three year contract. Three-year contract with options for up to (2) 1-year extensions for ongoing work.**

3. **Will any bonding be required? Yes, 5% total bid cost.**

4. **How will work be assigned on this contract? Will multiple contractors be assigned to a single project? Multiple contractors may be assigned to a single project, depending on scope required and contractor's abilities.**

5. **Is there an estimated yearly budget for this contract? $1M to $2.5M annually.**

6. **Are there any previous detailed, itemized bid tabs available for this or other similarly bid projects? Please see minutes with organizations present at the pre-bid meeting. The City of St. Pete Beach cannot see who has viewed the bid documents.**

7. **Is Item PL-50, (Grout, Gal) to be used in conjunction with items PL-47 through PL-49? Yes, please refer to the technical specifications. This pay item is applicable only in conjunction with Pay Items 47 through 49.**

8. **Can the owner add a Lateral Grouting, Per EA, Bid Item? Yes, pay item 55 has been added under pipe lining.**

9. **Does the owner have an annual budget for the Wastewater System Pipe (CIPP) Lining portion? No specific budget per portion.**

10. **In the addendum it says we need a 5% Bid Bond. Do you have a form to provide, or can our Surety use there's? We do not have a form. This would come from your surety company for the bond.**

11. **Several vendors have asked about using specific material manufacturers. The specifications for manhole lining materials do not specify specific manufacturers and/or products for use under this contract. As specified in Specification Section 1.09, all materials, appliances, and types of construction shall be in accordance with the Technical Specifications. Accordingly, bidders may base their bids on any manhole lining system that meets the performance and technical requirements of the specifications. Any proposed material or product will be subject to review for compliance with the Contract Documents through the submittal process after award.**

Docusign Envelope ID: AFCB16A4-B390-89EA-8013-04580053D90F

12. **In Addendum 1, there are contradicting answers for the bid bond needing to be submitted. On page 3 after the questions asked during the pre-bid, it states that it is bondable based on the project at that time, meaning a bid bond wasn't required to be submitted. On page 4 and 5, it states a bid bond of 5% is required to be submitted. Can you please clarify if a bid bond is required to be submitted with the proposal, and if so, what percentage is required? Discussion after the meeting led the City of St. Pete Beach to require a bid bond of 5% total bid cost, which must be submitted with the proposal.**

13. **Are alternate products being considered if they meet specification requirements of the proposed products? The specifications for manhole lining materials do not specify specific manufacturers and/or products for use under this contract. As specified in Specification Section 1.09, all materials, appliances, and types of construction shall be in accordance with the Technical Specifications. Accordingly, bidders may base their bids on any manhole lining system that meets the performance and technical requirements of the specifications. Any proposed material or product will be subject to review for compliance with the Contract Documents through the submittal process after award.**

14. **Do we have to fill out each individual section of the bid form, or can we bid the section that only pertains to our capabilities? See IV. General Contract Terms: It is not mandatory to submit a proposal for every item listed. A bidder may bid on any, all, or none of the items.**

15. **What is the anticipated work order size and how many work orders are anticipated to be issued annually? City anticipates issuing 3 purchase orders annually, 1 for each scope (pipe lining, point repairs, manhole rehabilitation), with multiple work orders per purchase order.**

16. **Will the work orders be issued in geographically grouped areas, or will the work be scattered across the City? Work orders will be issued in geographically grouped areas.**

17. **The RFP page 6 states "Vendors may submit proposals for all, some, or only one of the categories" and later "bidder may bid on any, all, or none of the items." Please confirm if bidders are required to bid all items with a category (Manhole Rehabilitation, Pipe Lining, and/or Point Repairs). You may bid certain line items only.**

18. **What are the allowable working hours? Standard work hours shall be from 7:30 AM until 6:00 PM, Monday through Saturday. No work shall take place on Sundays or on official City holidays without prior approval by the City Manager or designee at least 1 week prior to the scheduled work. A list of current official City holidays can be found on the City's Human Resources website at http://www.stpetebeach.org/hr/holidays.html. Contractor will coordinate scheduling of work with the City's Project Manager and City's Inspector.**

19. **Pipe Lining Item 15 for 6" Diameter CIPP shows a thickness of 6.0mm. This is not feasible for 6" diameter pipe and industry standard is 4.5mm. Please confirm 4.5mm will be acceptable for 6" diameter CIPP. 4.5mm is acceptable. This is acceptable. Pay item 15 has been updated accordingly.**

Docusign Envelope ID: AFCB16A4-B390-89EA-8013-04580053D90F

20. Regarding Mobilization bid item, please confirm this will be paid for each work order, and will not be paid only once per year. Please refer to the technical specifications. The quantity of mobilization to be paid for under this item shall be measured as one unit each (EA) per job assignment. One (1) mobilization will be allowed for each job assignment, project, or work order no matter how many times the equipment must be relocated by loading, transporting, and unloading, or under its own power to complete the job assignment or project. Payment for mobilization shall not exceed 10 percent (10%) of the total Contract cost unless the Contractor can prove to the City that his actual mobilization cost exceeds 10 percent (10%).

21. Section 2 Pay Item Descriptions for Mobilization includes "establishment of Subcontractor's temporary offices, buildings, …" Please confirm a temporary office or building is not required. Not required.

22. Section 2 Pay Item Descriptions for Bypass Pumping Setup & Operation states this "Pay Item is applicable on projects or repairs that have high flow or require an over night by pass operation." What is considered "high flow"? Will this item be paid for a "typical" bypass for an 8" diameter CIPP installation? Please elaborate on the requirements for this item and how it will be paid. These pay items apply when bypass pumping is needed to complete the repair without overflows. Pay item 26 would be used for bypass for an 8" diameter installation. The quantity to be measured for payment under this Pay Item will be the actual number of by-pass pumping set ups and operations, per part of day, required by the Engineer in the work. The minimum measurement for this pay item is eight (8) hours or 0.333 days and is measured from the time that the sewage is actually by-passed. This eight (8) hour minimum (0.333 days) includes full compensation for set up and operation for up to the first eight (8) hour period. Additional time will be in tenths of the day or twenty-four (24) hour period. The quantities determined shall be paid per day (DAY) or portion of day of by-pass pumping set up and operation.

23. The measurement for bypass also states the minimum measurement is 8 hours and will be paid for the first 8 hour period with additional time in tenths of a day. Please explain how this will be paid for say a 10 hour day. For example with $1,000/EA Setup and $500/Day: If a 10 hour day is being bypassed, will the contractor be paid the $1000 setup plus 2 hours (10-8 hours) / 24 hours x $1000 = $83.33 + $500 for a total of $1,583.33? In this scenario, payment would be total $1,216.50. ($1,000 setup + $500 operation x (0.333 day + 0.1 day))

24. Section 2 Pay Item Descriptions for CIPP Main Liner include cleaning and pre/post CCTV inspection. However, there are bid items for Normal Cleaning and Specialty Cleaning. Please confirm cleaning and pre CCTV inspection to prep the pipe for CIPP lining will be paid under the Normal Cleaning and/or Specialty Cleaning items, and is not incidental to CIPP Main Liner items. Cleaning and pre CCTV Cleaning and pre-CCTV inspection to prep the pipe for CIPP is incidental to CIPP main liner items. Payment shall include all materials, labor, equipment, and supplies necessary for the CIPP Main Liner installation, and specifically includes, but is not limited to, pre-rehabilitation CCTV inspection, liner sampling and storage of samples for testing, sealing liner connections at manholes, matching existing manhole lining to the CIPP

Docusign Envelope ID: AFCB16A4-B390-89EA-8013-04580053D90F

liner, matching existing flow channels and surfacing to the liner to minimize turbulence, cleaning, removal and disposal of all sand, rubble, deposits, and other accumulated debris after liner installation, post-rehabilitation CCTV inspection video and log, restoration, and all other appurtenant work as specified. Pay items 39-46 are for services requiring cleaning only.

25. Section 2 Pay Item Descriptions for Chemical Sealing of Host Pipe states this item will be paid for each pipe "regardless of…the number of infiltration points sealed." This currently reads that a pipe with one single joint with infiltration will be paid the same as a different pipe with 80 joints that all need to be sealed. Bidders have no way of knowing how many joints may be leaking on a particular segment which could drastically skew the pricing. Would you please consider revising this item to include Chemical Sealing of Host Pipe per Joint or per Service Connection? This pay item is to provide a cost for sealing excessively leaking infiltration points prior to lining of a host pipe. Revising this to a per-seal price would introduce the need to verify the number of leaking joints prior to approving a pay application following execution of the work. For tracking purposes, a flat-fee price will remain.

26. Section 2 Pay Item Descriptions for Service Reconnection states each service shall be grouted 18-inches into the lateral. Will this remain a requirement? If so, would you please consider adding Service Reconnection bid items per pipe diameter as there is substantial cost difference in grouting laterals per main diameter? Main diameter should not be a big factor, the lateral diameters are fairly consistent and the annular space volume will be dependent on the lateral diameter, not the main diameter. Pay item to remain as is.

27. The CIPP Spec (Section 21), paragraph 21.11.02 states up to 10% of the installed liners may be tested for exfiltration per ASTM F1216, Section 8.2 which is a hydrostatic pressure test. This test is not applicable to any line with services and adds unnecessary cost to the project as any potential defects will be verified via the post-rehab CCTV inspection. Would you please consider removing this unnecessary requirement which will ultimately create the most competitive pricing for the Owner? Section 21.11.02 specifies the testing is to be performed prior to any service lateral reconnections. Pay item to remain as-is.

28. Also, please accept SAK Construction, LLC as Installer and Pipenology, LLC as Manufacturer of CIPP Liners, in regards to the above referenced project. Per prequalification requirements on pages 1 and 2 of the Section 21 – CIPP Specification, please see attached documents for your review: SAK Company Information, CIPP Completed Project List, Pipenology CIPP Liner Submittal. The specifications for manhole lining materials do not specify specific manufacturers and/or products for use under this contract. As specified in Specification Section 1.09, all materials, appliances, and types of construction shall be in accordance with the Technical Specifications. Accordingly, bidders may base their bids on any manhole lining system that meets the performance and technical requirements of the specifications. Any proposed material or product will be subject to review for compliance with the Contract Documents through the submittal process after award.

Docusign Envelope ID: AFCB16A4-B390-89EA-8013-04580053D90F

29. **Can you please specify whether the minimum CIPP thicknesses are pre- or post- installation measurements?** Post-installation (finished-in-place) thickness.

30. **Will the Owner provide water, at no cost to the contractor, for work requiring water?** Yes.

Docusign Envelope ID: AFCB16A4-B390-89EA-8013-04580053D90F

155 Corey Avenue
St. Pete Beach, FL 33706-1839
www.stpetebeach.org

ADDENDUM 3

Wastewater System Rehabilitation Services

Issued 3/30/2026

*Sealed bids must be received by **9:00 AM on 04/08/2026** electronically via Bonfire. Bids received after the deadline will not be accepted. They will be publicly opened and read at **10:00 AM on 04/08/2026**. All bidders are invited to attend this bid Opening.*

Addendum 3 includes:

Questions and Answers

Docusign Envelope ID: AFCB16A4-B390-89EA-8013-04580053D90F

Questions and Answers:

Do we add all documents including the bid for (Price) to one PDF for submission? You may submit more than one document. They do not have to all be on one PDF.

For pay items 34-36 and pay items 40-42, the units are EA. Can you provide the depths of the manholes under "EACH" since this will significantly affect the price? Or can you change the units to VF as you have on the pay items for Additional MH Coating? 48" diameter manhole depths range from approx. 2 to 14 ft, with the majority between 4 and 6 ft.

Docusign Envelope ID: AFCB16A4-B390-89EA-8013-04580053D90F

EXHIBIT "C"

Vendor Bid/Proposal

(Place Vendor's Bid/Proposal Behind this Page)

Docusign Envelope ID: AFCB16A4-B390-89EA-8013-04580053D90F

VI. CONTRACTOR'S PROPOSAL SUBMITTAL

The company that is submitting a proposal declares that it has extensive experience in Wastewater System Rehabilitation Services, including manhole rehabilitation, pipe lining and point repairs.

The undersigned, as Proposer, hereby declares that the only person or persons interested in the Proposal as principal or principals are named herein, and that no person other than herein mentioned has any interest in the Proposal or in the Agreement to be entered into; that this Proposal or Agreement is made without connection with any other person, company, or parties making a Proposal; and that it is in all respects fair and in good faith without collusion or fraud.

The Proposer further declares that they have examined the site of the work and informed themselves fully in regard to all conditions pertaining to the place where the work is to be done; that they have examined the Plans and Specifications for the work and Contract Documents relative thereto, and have read all special provisions furnished prior to the opening of proposals; and that they have satisfied themselves relative to the materials to be supplied and work to be performed.

The Proposer proposes and agrees, if the Proposal is accepted, to contract with the City of St. Pete Beach, Florida, in the form of an Agreement specified for **"Wastewater System Rehabilitation Services"** in St. Pete Beach, Florida, in full and complete accordance with the shown, noted, described, and reasonably intended requirements of the Plans, Specifications, and Contract Documents, to the full and entire satisfaction of the City of St. Pete Beach, Florida.

The successful Proposer shall be required to utilize the template Agreement in this Request for Proposals (RFP) and any questions regarding the Agreement must be addressed during the RFP process before submittal. The City reserves the right to respond or not respond to questions in the form of an addendum.

The Proposer proposes to furnish all materials, equipment, labor, and perform the work submitted in their proposal schedule for the City of St. Pete Beach **"Wastewater System Rehabilitation Services."**

COMPANY: SAK Construction, LLC DATE: April 8, 2026

ADDRESS: 864 Hoff Road, O'Fallon, MO 63366 PHONE: 636-385-1000 / bidcippe@sakcon.com

PROPOSER: _____ NAME: Tim Bussen, Vice President

(SIGNATURE) (PRINT NAME & TITLE)

STATE OF ~~FLORIDA~~Missouri
COUNTY OF St. Charles

The foregoing instrument was sworn to (or affirmed), subscribed, and acknowledged before me by means of ☑ physical presence or ☐ online notarization, this 8th day of April, 2026, by Tim Bussen, Vice President, who is personally known to me or has produced personally know as identification.

(SEAL)

KATHLEEN ANN REED
Notary Public, Notary Seal
State of Missouri
Lincoln County
Commission # 20854191
My Commission Expires 08-13-2028

Kathleen Ann Reed
Notary Public – State of ~~Florida~~Missouri

Kathleen Ann Reed, Notary Public
(Print, Type, Stamp, or Commissioned Name of Notary Public)

SUBMIT PROPOSAL TO: Electronically via Bonfire only

Docusign Envelope ID: AFCB16A4-B390-89EA-8013-04580053D90F

VII. PUBLIC ENTITY CRIMINAL AFFIDAVIT

SWORN STATEMENT – PUBLIC ENTITY CRIMES

PURSUANT TO § 287.133 (3)(a), FLORIDA STATUTES, ON PUBLIC ENTITY CRIMES
THE FORM MUST BE SIGNED AND SWORN TO IN THE PRESENCE OF A NOTARY PUBLIC OR OTHER OFFICIAL AUTHORIZED TO ADMINISTER OATHS.

1. This sworn statement is submitted to: City of St. Pete Beach

by: Tim Bussen, Vice President
(Print individual's name and title)

for: SAK Construction, LLC
(Print name of entity submitting sworn statement)

at: 864 Hoff Road, O'Fallon, MO 63366
(Business address)

and (if applicable), its Federal Employer Identification Number (FEIN):

20-4193988
(FEIN)
or, if the entity has no FEIN, include the Social Security Number:

N/A
(SSN)

by the individual signing this sworn statement: _____
(Signature) Tim Bussen, Vice President

2. I understand that a "public entity crime" as defined in § 287.133 (1)(g), Fla. Stat., means a violation of any State or Federal law by a person with respect to and directly related to the transaction of business with any public entity or with an agency or political subdivision of any other state or of the United States including, but not limited to, any proposal or contract for goods or services, any lease for real property, or any contract for the construction or repair of a public building or public work, involving antitrust, fraud, theft, bribery, collusion, racketeering, conspiracy, or material misrepresentation.

3. I understand that "convicted" or "conviction" as defined in § 287.133 (1)(b), Fla. Stat., means a finding of guilt or a conviction of public entity crime with or without an adjudication of guilt in any Federal or State trial court of record relating to charges brought by indictment or information after July 1, 1989, as a result of a jury verdict, non-jury trial, or entry of a plea of guilty or nolo contendere.

4. I understand that an "affiliate" as defined in § 287.133 (1)(a), Fla. Stat., means:
   a. A predecessor or successor of a person convicted of a public entity crime or
   b. An entity under the control of any natural person who is active in the management of the entity and who has been convicted of a public entity crime. The term "affiliate" includes those officers, directors, executives, partners, shareholders, employees, members, and agents who are active in the management of an affiliate. The ownership by one (1) person of shares constituting a controlling interest in another person or a pooling of equipment or income among persons when not for fair market value under the arm's length agreement, shall be a prima facie case that one (1) person controls another person. A person who knowingly enters into a joint venture with a person who has been convicted of a public crime in Florida during the preceding thirty-six (36) months shall be considered an

Docusign Envelope ID: AFCB16A4-B390-89EA-8013-04580053D90F

affiliate.

5. I understand that a "person" as defined in Section 287.133 (1)(e), Fla. Stat., means any natural person or any entity organized under the laws of any state or of the United States with the legal power to enter into a binding contract and which proposals or applies to proposal on contracts let by a public entity, or which otherwise transacts or applies to transact business with a public entity. The term "person" includes those officers, directors, executives, partners, shareholders, employees, members, and agents who are active in management of an entity.

6. Based on information and belief, the **statement which I have marked below is true** in relation to the entity submitting this sworn statement (indicate which statement applies).

☒ Neither the entity submitting this sworn statement, nor any of its officers, directors, executives, partners, shareholders, employees, members, or agents who are active in the management of the entity nor any affiliate of the entity has been charged with and convicted of a public entity crime subsequent to July 1, 1989.

☐ The entity submitting this sworn statement or one (1) or more of its officers, directors, executives, partners, shareholders, employees, members, or agents who are active in the management of the entity or an affiliate of the entity has been charged with and convicted of a public entity crime subsequent to July 1, 1989.

☐ The entity submitting this sworn statement or one (1) or more of its officers, directors, executives, partners, shareholders, employees, members, or agents who are active in the management of the entity or an affiliate of the entity has been charged with and convicted of a public entity crime subsequent to July 1, 1989. However, there has been a subsequent proceeding before a Hearing Office of the State of Florida, Division of Administrative Hearings and the Final Order entered by the Hearing Officer determined that it was not in the public interest to place the entity submitting this sworn statement on the convicted vendor list (attach a copy of the final order).

I UNDERSTAND THAT THE SUBMISSION OF THIS FORM TO THE CONTRACTING OFFICE FOR THE PUBLIC ENTITY IDENTIFIED IN PARAGRAPH 1 ABOVE IS FOR THE PUBLIC ENTITY ONLY AND THAT THIS FORM IS VALID THROUGH DECEMBER 31 OF THE CALENDAR YEAR IN WHICH IT IS FILED. I ALSO UNDERSTAND THAT I AM REQUIRED TO INFORM THE PUBLIC ENTITY PRIOR TO ENTERING INTO A CONTRACT IN EXCESS OF THE THRESHOLD AMOUNT PROVIDED IN SECTION 287.017, FLORIDA STATUTES, FOR CATEGORY TWO OF ANY CHANGE IN THE INFORMATION CONTAINED IN THIS FORM.

STATE OF ~~FLORIDA~~ Missouri
COUNTY OF St. Charles

The foregoing instrument was sworn to (or affirmed), subscribed, and acknowledged before me by means of ☑ physical presence or ☐ online notarization, this 8th day of April, 2026, by Tim Bussen, Vice President, who is personally known to me or has produced personally know as identification.

(SEAL)

KATHLEEN ANN REED
Notary Public, Notary Seal
State of Missouri
Lincoln County
Commission # 20854191
My Commission Expires 08-13-2028

Kathleen Ann Reed
Notary Public – State of ~~Florida~~ Missouri

Kathleen Ann Reed, Notary Public
(Print, Type, Stamp, or Commissioned Name of Notary Public)

20

Docusign Envelope ID: AFCB16A4-B390-89EA-8013-04580053D90F

VIII. NON-COLLUSION AFFADAVIT

STATE OF Missouri COUNTY OF St. Charles

I state that I Tim Bussen, Vice President (Name and Title) of SAK Construction, LLC (Name of Firm),

I am authorized to make this affidavit on behalf of my firm and its owner, directors and officers. I am the person responsible in my firm for the price(s) and amount(s) of this Response, and the preparation of the Response. I state that:

1. The price(s) and amount(s) of this Response have been arrived at independently and without consultation, communication or agreement with any other Provider, potential provider, Proposal, or potential Proposal.

2. Neither the price(s) nor the amount(s) of this Response, and neither the approximate price(s) nor approximate amount(s) of this Response, have been disclosed to any other firm or person who is a Provider, potential Provider, Proposal, or potential Proposal, and they will not be disclosed before Proposal opening.

3. No attempt has been made or will be made to induce any firm or persons to refrain from submitting a Response for this contract, or to submit a price(s) higher that the prices in this Response, or to submit any intentionally high or noncompetitive price(s) or other form of complementary Response.

4. The Response of my firm is made in good faith and not pursuant to any agreement or discussion with, or inducement from, any firm or person to submit a complementary or other noncompetitive Response.

5. SAK Construction, LLC, its affiliates, subsidiaries, officers, director, and employees (Name of Firm) are not currently under investigation, by any governmental agency and have not in the last three years been convicted or found liable for any act prohibited by State or Federal law in any jurisdiction, involving conspiracy or collusion with respect to Proposal, on any public contract, except as follows:

I state that I and the named firm understand and acknowledge that the above representations are material and important, and will be relied on by the State of Florida for which this Response is submitted. I understand and my firm understands that any misstatement in this affidavit is, and shall be treated as, fraudulent concealment from the State of Florida of the true facts relating to the submission of responses for this contract.

Name of Organization: SAK Construction, LLC Signed By: 

Print Name: Tim Bussen, Vice President

The foregoing instrument was sworn to (or affirmed), subscribed, and acknowledged before me by means of ☒ physical presence or ☐ online notarization, this 8th day of April, 2026, by Tim Bussen, Vice President, who is personally known to me or has produced personally know as identification.

(SEAL)

KATHLEEN ANN REED
Notary Public, Notary Seal
State of Missouri
Lincoln County
Commission # 20854191
My Commission Expires 08-13-2028

Kathleen Ann Reed
Notary Public – State of ~~Florida~~ Missouri

Kathleen Ann Reed, Notary Public
(Print, Type, Stamp, or Commissioned Name of Notary Public)

AIA Document A310™ – 2010

Bid Bond

CONTRACTOR:
(Name, legal status and address)
SAK Construction, LLC
864 Hoff Road
O'Fallon, MO 63366

OWNER:
(Name, legal status and address)
City of St. Pete Beach
155 Corey Avenue
St. Pete Beach, FL 33706

SURETY:
(Name, legal status and principal place of business)
Travelers Casualty and Surety Company of America
One Tower Square
Hartford, CT 06183

Mail Notices To:
Travelers
Attn: Surety Claim Dept.
One Tower Square 2S1A
Hartford, CT 06183

This document has important legal consequences. Consultation with an attorney is encouraged with respect to its completion or modification.

Any singular reference to Contractor, Surety, Owner, or other party shall be considered plural where applicable.

BOND AMOUNT: Five Percent (5%) of the Amount Bid

PROJECT: Wastewater System Rehabilitation Services, St. Pete Beach, Pinellas County, FL

(Name, location or address, and Project number, if any)

The Contractor and Surety are bound to the Owner in the amount set forth above, for the payment of which the Contractor and Surety bind themselves, their heirs, executors, administrators, successors and assigns, jointly and severally, as provided herein. The conditions of this Bond are such that if the Owner accepts the bid of the Contractor within the time specified in the bid documents, or within such time period as may be agreed to by the Owner and Contractor, and the Contractor either (I) enters into a contract with the Owner in accordance with the terms of such bid, and gives such bond or bonds as may be specified in the bidding or Contract Documents, with a surety admitted in the jurisdiction of the Project and otherwise acceptable to the Owner, for the faithful performance of such Contract and for the prompt payment of labor and material furnished in the prosecution thereof; or (2) pays to the Owner the difference, not to exceed the amount of this Bond, between the amount specified in said bid and such larger amount for which the Owner may in good faith contract with another party to perform the work covered by said bid, then this obligation shall be null and void, otherwise to remain in full force and effect. The Surety hereby waives any notice of an agreement between the Owner and Contractor to extend the time in which the Owner may accept the bid. Waiver of notice by the Surety shall not apply to any extension exceeding sixty (60) days in the aggregate beyond the time for acceptance of bids specified in the bid documents, and the Owner and Contractor shall obtain the Surety's consent for an extension beyond sixty (60) days.

If this Bond is issued in connection with a subcontractor's bid to a Contractor, the term Contractor in this Bond shall be deemed to be Subcontractor and the term Owner shall be deemed to be Contractor.

When this Bond has been furnished to comply with a statutory or other legal requirement in the location of the Project, any provision in this Bond conflicting with said statutory or legal requirement shall be deemed deleted herefrom and provisions conforming to such statutory or other legal requirement shall be deemed incorporated herein. When so furnished, the intent is that this Bond shall be construed as a statutory bond and not as a common law bond.

Signed and sealed this 8th day of April, 2026

Kathleen Ann Reed
(Witness) Kathleen Ann Reed, witness

(Witness) Andrea McCarthy, Witness

SAK Construction, LLC
(Principal)
(Seal)
(Title) Tim Bussen, Vice President

Travelers Casualty and Surety Company of America
(Surety)
(Title) Andrew P. Thome, Attorney-in-Fact

Init. **AIA Document A310™— 2010. Copyright** ©1963, 1970 and 2010 by The American Institute of Architects. **All rights reserved. WARNING:** This AIA Document is protected by U.S. Copyright Law and International Treaties. Unauthorized reproduction or distribution of this AIA Document, or any portion of it, may result in severe civil and criminal penalties, and will be prosecuted to the maximum extent possible under the law. Purchasers are permitted to reproduce ten (10) copies of this document when completed. To report copyright violations of AIA Contract Documents, e-mail The American Institute of Architects' legal counsel, copyright@aia.org. 061110

Docusign Envelope ID: AFCB16A4-B390-89EA-8013-04580053D90F

ACKNOWLEDGEMENT FOR CONTRACTOR

ACKNOWLEDGEMENT FOR CONTRACTOR, IF LIMITED LIABILITY COMPANY

STATE OF **Missouri** }

COUNTY OF **St. Charles** }

ON THE **8th** DAY OF **April**, **2026**, BEFORE ME PERSONALLY APPEARED **Tim Bussen** TO ME KNOWN AND KNOWN TO ME TO BE THE **Vice President** OF **SAK Construction, LLC**, A LIMITED LIABILITY COMPANY, DESCRIBED IN AND WHO EXECUTED THE FOREGOING INSTRUMENT AND ACKNOWLEDGED TO ME THAT (S)HE EXECUTED THE FOREGOING INSTRUMENT AND ACKNOWLEDGED TO ME THAT (S)HE EXECUTED THE SAME AS AND FOR THE ACT AND DEED OF SAID LIMITED LIABILITY COMPANY.

KATHLEEN ANN REED
Notary Public, Notary Seal
State of Missouri
Lincoln County
Commission # 20854191
My Commission Expires 08-13-2028

Kathleen Ann Reed, Notary Public

Docusign Envelope ID: AFCB16A4-B390-89EA-8013-04580053D90F

TRAVELERS

Travelers Casualty and Surety Company of America
Travelers Casualty and Surety Company
St. Paul Fire and Marine Insurance Company

POWER OF ATTORNEY

KNOW ALL MEN BY THESE PRESENTS: That Travelers Casualty and Surety Company of America, Travelers Casualty and Surety Company, and St. Paul Fire and Marine Insurance Company are corporations duly organized under the laws of the State of Connecticut (herein collectively called the "Companies"), and that the Companies do hereby make, constitute and appoint **ANDREW P THOME** of **CHESTERFIELD**, **Missouri**, their true and lawful Attorney(s)-in-Fact to sign, execute, seal and acknowledge any and all bonds, recognizances, conditional undertakings and other writings obligatory in the nature thereof on behalf of the Companies in their business of guaranteeing the fidelity of persons, guaranteeing the performance of contracts and executing or guaranteeing bonds and undertakings required or permitted in any actions or proceedings allowed by law.

IN WITNESS WHEREOF, the Companies have caused this instrument to be signed, and their corporate seals to be hereto affixed, this **21st** day of **April, 2021**.

HARTFORD, CONN. — TRAVELERS CASUALTY AND SURETY COMPANY OF AMERICA
HARTFORD, CONN. — TRAVELERS CASUALTY AND SURETY COMPANY
CORPORATE SEAL — ST. PAUL FIRE AND MARINE INSURANCE COMPANY

State of Connecticut

City of Hartford ss.

By: _____
Robert L. Raney, Senior Vice President

On this the **21st** day of **April, 2021**, before me personally appeared **Robert L. Raney**, who acknowledged himself to be the Senior Vice President of each of the Companies, and that he, as such, being authorized so to do, executed the foregoing instrument for the purposes therein contained by signing on behalf of said Companies by himself as a duly authorized officer.

IN WITNESS WHEREOF, I hereunto set my hand and official seal.

My Commission expires the **30th** day of **June, 2026**

ANNA P NOWIK NOTARY PUBLIC CONNECTICUT

_____
Anna P. Nowik, Notary Public

This Power of Attorney is granted under and by the authority of the following resolutions adopted by the Boards of Directors of each of the Companies, which resolutions are now in full force and effect, reading as follows:

RESOLVED, that the Chairman, the President, any Vice Chairman, any Executive Vice President, any Senior Vice President, any Vice President, any Second Vice President, the Treasurer, any Assistant Treasurer, the Corporate Secretary or any Assistant Secretary may appoint Attorneys-in-Fact and Agents to act for and on behalf of the Company and may give such appointee such authority as his or her certificate of authority may prescribe to sign with the Company's name and seal with the Company's seal bonds, recognizances, contracts of indemnity, and other writings obligatory in the nature of a bond, recognizance, or conditional undertaking, and any of said officers or the Board of Directors at any time may remove any such appointee and revoke the power given him or her; and it is

FURTHER RESOLVED, that the Chairman, the President, any Vice Chairman, any Executive Vice President, any Senior Vice President or any Vice President may delegate all or any part of the foregoing authority to one or more officers or employees of this Company, provided that each such delegation is in writing and a copy thereof is filed in the office of the Secretary; and it is

FURTHER RESOLVED, that any bond, recognizance, contract of indemnity, or writing obligatory in the nature of a bond, recognizance, or conditional undertaking shall be valid and binding upon the Company when (a) signed by the President, any Vice Chairman, any Executive Vice President, any Senior Vice President or any Vice President, any Second Vice President, the Treasurer, any Assistant Treasurer, the Corporate Secretary or any Assistant Secretary and duly attested and sealed with the Company's seal by a Secretary or Assistant Secretary; or (b) duly executed (under seal, if required) by one or more Attorneys-in-Fact and Agents pursuant to the power prescribed in his or her certificate or their certificates of authority or by one or more Company officers pursuant to a written delegation of authority; and it is

FURTHER RESOLVED, that the signature of each of the following officers: President, any Executive Vice President, any Senior Vice President, any Vice President, any Assistant Vice President, any Secretary, any Assistant Secretary, and the seal of the Company may be affixed by facsimile to any Power of Attorney or to any certificate relating thereto appointing Resident Vice Presidents, Resident Assistant Secretaries or Attorneys-in-Fact for purposes only of executing and attesting bonds and undertakings and other writings obligatory in the nature thereof, and any such Power of Attorney or certificate bearing such facsimile signature or facsimile seal shall be valid and binding upon the Company and any such power so executed and certified by such facsimile signature and facsimile seal shall be valid and binding on the Company in the future with respect to any bond or understanding to which it is attached.

I, **Kevin E. Hughes**, the undersigned, Assistant Secretary of each of the Companies, do hereby certify that the above and foregoing is a true and correct copy of the Power of Attorney executed by said Companies, which remains in full force and effect.

Dated this 8th day of April, 2026.

HARTFORD, CONN. — TRAVELERS CASUALTY AND SURETY COMPANY OF AMERICA
HARTFORD, CONN. — TRAVELERS CASUALTY AND SURETY COMPANY
CORPORATE SEAL — ST. PAUL FIRE AND MARINE INSURANCE COMPANY

_____
Kevin E. Hughes, Assistant Secretary

To verify the authenticity of this Power of Attorney, please call us at 1-800-421-3880.
Please refer to the above-named Attorney(s)-in-Fact and the details of the bond to which this Power of Attorney is attached.

Docusign Envelope ID: AFCB16A4-B390-89EA-8013-04580053D90F

TRAVELERS CASUALTY AND SURETY COMPANY OF AMERICA

HARTFORD, CONNECTICUT 06183

FINANCIAL STATEMENT AS OF DECEMBER 31, 2024

CAPITAL STOCK $ 6,480,000

ASSETS		LIABILITIES & SURPLUS	
BONDS	$ 5,367,684,447	LOSSES	$ 1,648,831,742
STOCKS	99,502,344	LOSS ADJUSTMENT EXPENSES	169,492,904
CASH AND INVESTED CASH	69,689,826	REINSURANCE PAYABLE ON PAID LOSSES & LOSS ADJ. EXPENSES	15,148,347
OTHER INVESTED ASSETS	9,969,793	COMMISSIONS	62,360,717
SECURITIES LENDING REINVESTED COLLATERAL ASSETS	30,993,966	OTHER EXPENSES	69,184,511
INVESTMENT INCOME DUE AND ACCRUED	45,630,862	TAXES, LICENSES AND FEES	16,311,579
PREMIUM BALANCES	346,017,428	CURRENT FEDERAL AND FOREIGN INCOME TAXES	7,102,552
REINSURANCE RECOVERABLE	62,034,928	UNEARNED PREMIUMS	1,647,964,685
NET DEFERRED TAX ASSET	78,278,940	ADVANCE PREMIUM	3,970,618
UNDISTRIBUTED PAYMENTS	15,607,795	POLICYHOLDER DIVIDENDS	26,972,587
GUARANTY FUNDS RECEIVABLE OR ON DEPOSIT	2,148,727	CEDED REINSURANCE NET PREMIUMS PAYABLE	57,879,540
OTHER ASSETS	1,100,106	AMOUNTS WITHHELD / RETAINED BY COMPANY FOR OTHERS	17,071,685
		REMITTANCES AND ITEMS NOT ALLOCATED	10,456,481
		PROVISION FOR REINSURANCE	8,746,887
		PAYABLE TO PARENTS, SUBSIDIARIES AND AFFILIATES	79,937,444
		PAYABLE FOR SECURITIES LENDING	30,993,966
		ESCHEAT LIABILITY	595,014
		OTHER ACCRUED EXPENSES AND LIABILITIES	4,726
		TOTAL LIABILITIES	$ 3,873,025,985
		CAPITAL STOCK	$ 6,480,000
		PAID IN SURPLUS	433,803,760
		OTHER SURPLUS	1,815,349,416
		TOTAL SURPLUS TO POLICYHOLDERS	$ 2,255,633,176
TOTAL ASSETS	$ 6,128,659,161	TOTAL LIABILITIES & SURPLUS	$ 6,128,659,161

STATE OF CONNECTICUT)

COUNTY OF HARTFORD) SS.

CITY OF HARTFORD)

MICHAEL J. DOODY, BEING DULY SWORN, SAYS THAT HE IS VICE PRESIDENT – FINANCE, OF TRAVELERS CASUALTY AND SURETY COMPANY OF AMERICA, AND THAT TO THE BEST OF HIS KNOWLEDGE AND BELIEF, THE FOREGOING IS A TRUE AND CORRECT STATEMENT OF THE FINANCIAL CONDITION OF SAID COMPANY AS OF THE 31ST DAY OF DECEMBER, 2024.

Michael J Doody

VICE PRESIDENT – FINANCE

NOTARY PUBLIC

SUBSCRIBED AND SWORN TO BEFORE ME THIS
15TH DAY OF MARCH, 2025

SUSAN M. WEISSLEDER
Notary Public
My Commission Expires November 30, 2027

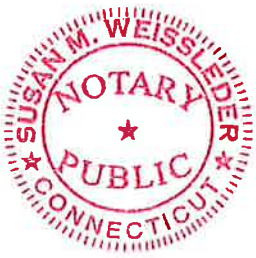

Docusign Envelope ID: AFCB16A4-B390-89EA-8013-04580053D90F

155 Corey Avenue
St. Pete Beach, FL 33706-1839
www.stpetebeach.org

ADDENDUM 1

Wastewater System Rehabilitation Services

Issued 3/23/2026

*Sealed bids must be received by **9:00 AM on 04/08/2026** electronically via Bonfire. Bids received after the deadline will not be accepted. They will be publicly opened and read at **10:00 AM on 04/08/2026**. All bidders are invited to attend this bid Opening.*

Addendum 1 includes:

Pre-bid Minutes
Questions and Answers

Docusign Envelope ID: AFCB16A4-B390-89EA-8013-04580053D90F

155 Corey Avenue
St. Pete Beach, FL 33706-1839
www.stpetebeach.org

ADDENDUM 2

Wastewater System Rehabilitation Services

Issued 3/27/2026

*Sealed bids must be received by **9:00 AM on 04/08/2026** electronically via Bonfire. Bids received after the deadline will not be accepted. They will be publicly opened and read at **10:00 AM on 04/08/2026**. All bidders are invited to attend this bid Opening.*

Addendum 2 includes:

Questions and Answers

Docusign Envelope ID: AFCB16A4-B390-89EA-8013-04580053D90F

155 Corey Avenue
St. Pete Beach, FL 33706-1839
www.stpetebeach.org

ADDENDUM 3

Wastewater System Rehabilitation Services

Issued 3/30/2026

*Sealed bids must be received by **9:00 AM on 04/08/2026** electronically via Bonfire. Bids received after the deadline will not be accepted. They will be publicly opened and read at **10:00 AM on 04/08/2026**. All bidders are invited to attend this bid Opening.*

Addendum 3 includes:

Questions and Answers

Docusign Envelope ID: AFCB16A4-B390-89EA-8013-04580053D90F

CAPABLE
EXPERIENCED
COMMITTED

SAK's trenchless technologies renews yesterday's pipelines for tomorrow's growth.











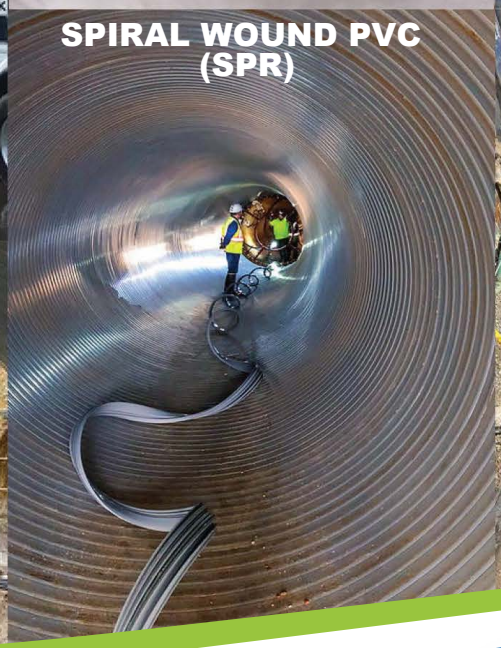









St. Pete Beach, Flordia
Minimum Qualifications
2026 Wastewater System Rehabilitation

SAK™

Pipeline Infrastructure. Solved.™

Docusign Envelope ID: AFCB16A4-B390-89EA-8013-04580053D90F

BRIEF COMPANY OVERVIEW

SAK was founded as a Limited Liability Company (LLC) in 2006 by three visionary pipeline rehabilitation experts: Jerry Shaw, the late Bob Affholder and Tom Kalishman. Collectively, they have over 100 years' experience developing innovative trenchless technologies for the pipeline rehabilitation market.

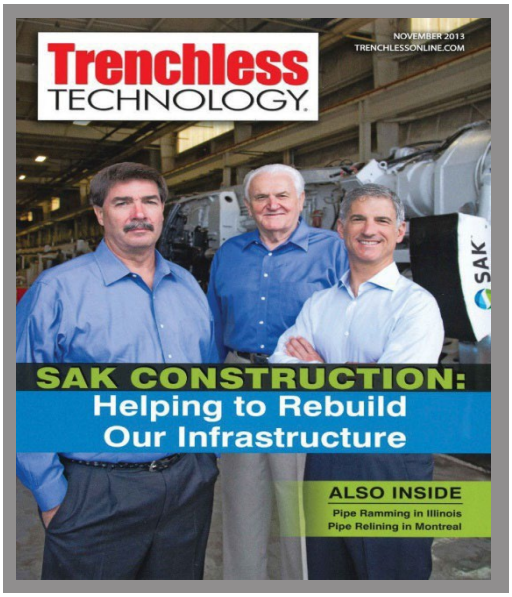

SAK Founders:
Jerry Shaw, Bob Affholder, Tom Kalishman

SAK's core philosophy is simple:
Safety, Integrity, and Honesty, our core values and will be always upheld.

SAK is an industry-leading pipe rehabilitation contractor that offers a full range of trenchless and underground construction services. SAK's core pipeline rehabilitation focus is Cure-in-Place Pipe (CIPP).

Since commencing operations, SAK has installed over 3,096 miles (16.3 million feet) of pipe, across the United States. SAK has recently surpassed $1.8 billion in total revenue. We employ over 500 full-time construction professionals. Headquartered in O'Fallon, Missouri, SAK operates in four regions across the United States. Each of these regions has personnel in leadership positions with decades of experience.

Our approximately 115,000 square-foot headquarters, equipment fabrication, product manufacturing and CIPP wet-out facility are located near St. Louis, Missouri approximately 20 miles west of I-70 from Lambert St. Louis Airport.

The address and contact information are:

SAK Construction, LLC 636-385-1000
phone 864 Hoff Road 636-385-1100 fax
O'Fallon, MO 63366 bidcippe@sakcon.com

The day-to-day project management will be performed from our Apopka, Florida office:

Dan Banken, Area Manager
SAK Construction, LLC
1767 Benbow Court, Ste C
Apopka, FL 32703 bidcippe@sakcon.com

WHY SAK CONSTRUCTION

Selecting SAK means partnering with a leader in water, wastewater, stormwater, and sewer system rehabilitation. Our approach combines safety, quality, and innovation to deliver exceptional results.

- **Safety First:** A proactive, behavioral safety culture that protects clients, the public, and employees from project start to completion.
- **Customer-Focused, Quality-Driven:** Leadership committed to excellence at every level.
- **Proven Expertise:** Extensive experience with diverse rehabilitation techniques across varied conditions and geographies.
- **Environmental Stewardship:** Dedicated to minimizing environmental impact on every project.
- **Reliable Delivery:** A track record of completing pipeline and manhole rehabilitation projects on time and within budget.

SAK is a national leader in trenchless technologies, offering cost-effective solutions for repairing, reconstructing, and expanding wastewater, water, and stormwater systems. We help clients address operational, regulatory, and environmental challenges associated with aging infrastructure.

KEY PERSONNEL

SAK's Southeast region is structured for efficiency and scalability, supported by regional offices in Georgia, Florida, and Tennessee to provide local expertise and rapid response. This network ensures seamless project execution and the ability to manage multiple assignments concurrently.

Our Florida team includes experienced professionals with extensive backgrounds in pipeline rehabilitation and trenchless technology. Our Project Managers in this region have over forty-five years of industry experience, overseeing multiple CIPP projects while maintaining strong communication with clients, inspectors, and subcontractors. Our General Superintendents and Superintendents bring decades of field leadership, ensuring all phases of CIPP installation are executed safely and efficiently.

Docusign Envelope ID: AFCB16A4-B390-89EA-8013-04580053D90F

This integrated structure with our combining strategic regional offices, seasoned project managers, and field leadership positions; SAK handles multiple projects simultaneously while maintaining high standards of quality, safety, and client satisfaction.

PROJECT EXPERIENCE

SAK has an extensive history of successfully delivering complex trenchless rehabilitation projects throughout the Southeast, including Florida. Our regional operations are strategically positioned to provide rapid mobilization and local expertise, ensuring efficient execution and compliance with all client and regulatory requirements.

SAK has completed a widespread portfolio of trenchless CIPP rehabilitation projects across Florida, totaling over 2 million linear feet of renewed sanitary and storm sewer pipelines. These projects, delivered for numerous public agencies, demonstrate consistent success on complex infrastructure systems and include pipelines ranging from 8 inches to 30 inches in diameter. SAK has executed both large-scale, multi-release municipal programs and smaller targeted projects, all completed at 100% and performed in diverse urban, coastal, and environmentally sensitive environments.

This broad experience highlights SAK's proven capability, reliability, and readiness to support St. Pete Beach's ongoing rehabilitation initiatives.

PROJECT QUALIFICATIONS

SAK has a strong history of completing similar projects for major regional municipalities. As a leading firm in the Southeast and nationwide, we understand local stakeholder relationships and public sector contracting needs. St. Pete Beach will benefit from our industry expertise, best practices, and effective sewer rehabilitation methods.

The *right tools in the right hands*—SAK delivers a depth of experience and a breadth of services to solve your most complex pipeline challenges. Whether renewing aging pipelines, expanding water and wastewater systems, or digging new tunnels for growing communities and businesses, we draw on the latest proven technologies to customize the right solution for your situation.

SAK's ***Cured-In-Place Pipe (CIPP)*** technology offers a smarter solution for aging sanitary and stormwater systems, which threaten the economic, public, and environmental well-being of cities nationwide. For many cash-strapped communities, the time, expense, and disruption of traditional pipeline replacement often outweigh the benefits. With our innovative CIPP technology, SAK has helped municipalities save millions by restoring pipelines rather than replacing them—providing a cost-effective, efficient, and sustainable alternative.



CIPP Lining

SAK Capabilities include but are not limited to:

- CIPP lining (gravity). 6"-108" diameter.
- CIPP lining (pressure). 6"-48" diameter.
- Large Diameter Tunneling Utilizing TBM up to 24-foot & Hand Mining up to 32-foot arch.
- Ultraviolet (UV) CIPP Lining
- Large Diameter Sliplining – 36" pipe and above.
- Large Diameter Geopolymer.
- SPR Spiral Wound PVC & PE.
- Bullet Liner (FFRP)
- Shotcrete.
- Shaft Excavation.
- Sewer Bypass.
- Sewer Cleaning & CCTV Inspection.
- Structure Rehabilitation.
- Cured-In-Place Pipe (CIPP) Tube Manufacturing.

SAFETY AND PERFORMANCE

SAK maintains industry leading safety standards and rigorous quality control processes. Our teams leverage advanced equipment and best practices to minimize disruption, protect the environment, and deliver long-term performance for rehabilitated infrastructure.

CLAIMS AND VIOLATIONS

SAK has completed thousands of municipal and utility infrastructure projects nationwide and has demonstrated a strong history of resolving issues without litigation whenever possible. The limited matters disclosed represent isolated occurrences over a five-year period and have not impaired SAK's financial stability, operational capabilities, or ability to perform public works contracts.

SAK confirms we follow all applicable Florida laws and City of St. Pete Beach regulations and is not currently in violation of any statute or regulatory requirement affecting its operations.

Docusign Envelope ID: AFCB16A4-B390-89EA-8013-04580053D90F

SAK is a leader in the repair, reconstruction, construction, and expansion of wastewater, water, and stormwater systems, utilizing a diverse array of trenchless technologies. With a nationwide presence, SAK is dedicated to assisting clients in identifying the most cost-effective solutions to complex operational, regulatory, and environmental challenges stemming from aging or deteriorating sanitary sewers, water mains, and storm sewers.

PROJECT REFERENCE 1

Project Name(s):
Trenchless Sanitary and Storm Sewer Rehabilitation Services Contract 24-B-806 FY 2025

Owner Name:
City of Largo

Owner Address:
P.O. Box 296, Largo FL 33779

Contact Information:
Mr. Norm Shaw, Construction Manager
727-5876713 ext. 4417
nshaw@largo.com

Contract Amount:
Approximate Contract Amount $1,000,000.00

Description of Services:

This project consists of the rehabilitation of sanitary and storm sewer pipelines and laterals from 8 inches to 84 inches in diameter, utilizing various trenchless technologies on an as needed basis. The scope of work includes cleaning, inspection, chemical grouting, and cured-in-place pipe (CIPP) lining, applied across multiple gravity flow systems such as sanitary sewers, storm sewers, and residential service connections.

Approximately, 7,500 linear feet of sewer infrastructure ranging from 8 inches to 36 inches has been successfully rehabilitated using the CIPP methods. This includes chemical grouting and CIPP lining of service laterals.

The contract has been renewed for a second term and will continue through Fiscal Year 2026, supporting ongoing infrastructure improvements and system reliability.

PROEJCT REFERENCE 2

Project Name(s):
2025 Annual Gravity Sewer Repair Program

Owner Name:
Seacoast Utility Authority (SUA)

Owner Address:
4200 Hood Road, Palm Beach Gardens FL 33410

Contact Information:
Mr. Brent Weidenhamer, PE, Director of Operations
561-627-2900 ext. 1494
bweidenhamer@sua.com

Contract Amount:
Approximate Contract Amount $ 750,000.00

Description of Services:

This project involved the trenchless rehabilitation of approximately 14,000 linear feet of gravity sanitary sewer using cured-in-place pipe (CIPP) lining. The work was part of SUA's ongoing maintenance program aimed at improving the reliability and performance of its sanitary sewer infrastructure.

During the contract period, SUA encountered an emergency failure of a ductile iron pipe servicing a sewage lift station. In close coordination with SUA, SAK Construction responded promptly, delivering a trenchless repair solution that minimized disruption to lift station operations.

As a result of this successful emergency response, SUA is now working with SAK to implement preventive inspection and rehabilitation services at similar lift stations throughout its systems, with work anticipated to begin in Fiscal Years 2026 and 2027.

Docusign Envelope ID: AFCB16A4-B390-89EA-8013-04580053D90F

PROJECT REFERENCE 3

Project Name(s):
San Annual CIPP Lining FY20

Owner Name:
City of St. Petersburg

Owner Address:
1650 3rd Ave N, St. Petersburg, FL 33701

Contact Information:
Matt Wilson, Facilities Projects Coordinator
727-415-0192
matthew.wilson@stpete.org

Contract Amount:
Approximate Contract Amount $6,385,000

Description of Services:
As part of a Consent Order between the City of St. Petersburg and the Florda Department of Environmental Protection, the City committed to a substantial investment in its utility infrastructure to reduce inflow and infiltration (I/I) and prevent unpermitted wastewater discharges.

In 2020, the City entered a multi-year contract with SAK Construction to provide trenchless sewer rehabilitation services throughout the municipality. Over the course of the five-year agreement, SAK successfully rehabilitated more than 82,000 linear feet of sewer pipelines ranging from 8 inches to 48 inches.

The primary rehabilitation method utilized was cured-in-place pipe (CIPP) lining, supplemented by chemical grouting service laterals, contributing to improved system integrity and reduced environmental impact.

PROJECT REFERENCE 4

Project Name(s): (PO #270557)
Wastewater I&I Project #UT23B I&I Mainline Lining

Owner Name:
City of Tamarac

Owner Address:
10101 State St., Tamarac FL 33321

Contact Information:
Jerry Robinson, Wastewater Supervisor
954-597-3763 jerry.robinson@tamarac.org

Contract Amount: $492,528

Description of Services:
This project involved the trenchless rehabilitation of approximately 11,000 linear feet of gravity sanitary sewer using cured-in-place pipe (CIPP) lining. The work was completed as part of the City of Tamarac's annual sanitary sewer maintenance program, aimed at extending the service life of existing infrastructure and improving system performance with minimal surface disruption.

PROJECT REFERENCE 5

Project Name(s):
FY25 Sanitary Sewer Relining

Owner Name:
City of Altamonte Springs

Owner Address:
225 Newburyport Ave, Altamonte Springs, FL 32701

Contact Information:
Erick Valazquez, Water Distribution & Collections
407-373-3086 evelazquez@altamonte.org

Contract Amount: $982,217

Description of Services:
This project consisted of the trenchless rehabilitation of approximately 20,000 linear feet of gravity sanitary sewer using cured-in-place pipe (CIPP) lining. The work was completed as part of the City of Altamonte Springs' annual sewer maintenance program, aimed at enhancing system reliability, reducing infiltration, and extending the life of existing infrastructure with minimal surface disruption.

CERTIFICATE OF LIABILITY INSURANCE

DATE (MM/DD/YYYY): 7/24/2025

THIS CERTIFICATE IS ISSUED AS A MATTER OF INFORMATION ONLY AND CONFERS NO RIGHTS UPON THE CERTIFICATE HOLDER. THIS CERTIFICATE DOES NOT AFFIRMATIVELY OR NEGATIVELY AMEND, EXTEND OR ALTER THE COVERAGE AFFORDED BY THE POLICIES BELOW. THIS CERTIFICATE OF INSURANCE DOES NOT CONSTITUTE A CONTRACT BETWEEN THE ISSUING INSURER(S), AUTHORIZED REPRESENTATIVE OR PRODUCER, AND THE CERTIFICATE HOLDER.

IMPORTANT: If the certificate holder is an ADDITIONAL INSURED, the policy(ies) must have ADDITIONAL INSURED provisions or be endorsed. If SUBROGATION IS WAIVED, subject to the terms and conditions of the policy, certain policies may require an endorsement. A statement on this certificate does not confer rights to the certificate holder in lieu of such endorsement(s).

PRODUCER Marsh & McLennan Agency LLC Company - St. Louis 825 Maryville Centre Drive, Suite 200 Chesterfield MO 63017	**CONTACT NAME:** Diane Stiehl, CISR **PHONE (A/C, No, Ext):** 314-594-2719 **FAX (A/C, No):** 888-307-1561 **E-MAIL ADDRESS:** diane.stiehl@marshmma.com
INSURED SAKCONST SAK Construction, LLC 864 Hoff Rd. O'Fallon, MO 63366	**INSURER(S) AFFORDING COVERAGE** / **NAIC #** **INSURER A :** Amerisure Mutual Insurance Company 23396 **INSURER B :** Starr Indemnity & Liability Company 38318 **INSURER C :** Continental Casualty Company 20443 **INSURER D :** **INSURER E :** **INSURER F :**

COVERAGES **CERTIFICATE NUMBER:** 985084677 **REVISION NUMBER:**

THIS IS TO CERTIFY THAT THE POLICIES OF INSURANCE LISTED BELOW HAVE BEEN ISSUED TO THE INSURED NAMED ABOVE FOR THE POLICY PERIOD INDICATED. NOTWITHSTANDING ANY REQUIREMENT, TERM OR CONDITION OF ANY CONTRACT OR OTHER DOCUMENT WITH RESPECT TO WHICH THIS CERTIFICATE MAY BE ISSUED OR MAY PERTAIN, THE INSURANCE AFFORDED BY THE POLICIES DESCRIBED HEREIN IS SUBJECT TO ALL THE TERMS, EXCLUSIONS AND CONDITIONS OF SUCH POLICIES. LIMITS SHOWN MAY HAVE BEEN REDUCED BY PAID CLAIMS.

INSR LTR	TYPE OF INSURANCE	ADDL INSD	SUBR WVD	POLICY NUMBER	POLICY EFF (MM/DD/YYYY)	POLICY EXP (MM/DD/YYYY)	LIMITS	
A	X **COMMERCIAL GENERAL LIABILITY** CLAIMS-MADE X OCCUR GEN'L AGGREGATE LIMIT APPLIES PER: POLICY X PRO-JECT X LOC OTHER:			CPP20635771602	8/2/2025	8/2/2026	EACH OCCURRENCE DAMAGE TO RENTED PREMISES (Ea occurrence) MED EXP (Any one person) PERSONAL & ADV INJURY GENERAL AGGREGATE PRODUCTS - COMP/OP AGG	$ 2,000,000 $ 1,000,000 $ 10,000 $ 2,000,000 $ 4,000,000 $ 4,000,000
A	**AUTOMOBILE LIABILITY** X ANY AUTO OWNED AUTOS ONLY / SCHEDULED AUTOS X HIRED AUTOS ONLY / X NON-OWNED AUTOS ONLY			CA20635761602	8/2/2025	8/2/2026	COMBINED SINGLE LIMIT (Ea accident) BODILY INJURY (Per person) BODILY INJURY (Per accident) PROPERTY DAMAGE (Per accident)	$ 2,000,000 $ $ $
B	UMBRELLA LIAB X OCCUR X **EXCESS LIAB** CLAIMS-MADE DED X RETENTION $ 0			1000585238251	8/2/2025	8/2/2026	EACH OCCURRENCE AGGREGATE	$ 5,000,000 $ 5,000,000
A	**WORKERS COMPENSATION AND EMPLOYERS' LIABILITY** ANYPROPRIETOR/PARTNER/EXECUTIVE OFFICER/MEMBER EXCLUDED? Y / N: N **(Mandatory in NH)** If yes, describe under DESCRIPTION OF OPERATIONS below	N / A		WC20635781702	8/2/2025	8/2/2026	X PER STATUTE / OTH-ER E.L. EACH ACCIDENT E.L. DISEASE - EA EMPLOYEE E.L. DISEASE - POLICY LIMIT	$ 1,000,000 $ 1,000,000 $ 1,000,000
C	Leased/Rented Equipment			5086483224	8/2/2025	8/2/2026	Per Item/Occurrence $5,000 Deductible	1,000,000

DESCRIPTION OF OPERATIONS / LOCATIONS / VEHICLES (ACORD 101, Additional Remarks Schedule, may be attached if more space is required)

CERTIFICATE HOLDER

For Information Only

CANCELLATION

SHOULD ANY OF THE ABOVE DESCRIBED POLICIES BE CANCELLED BEFORE THE EXPIRATION DATE THEREOF, NOTICE WILL BE DELIVERED IN ACCORDANCE WITH THE POLICY PROVISIONS.

AUTHORIZED REPRESENTATIVE

© 1988-2015 ACORD CORPORATION. All rights reserved.

Docusign Envelope ID: AFCB16A4-B390-89EA-8013-04580053D90F

Marsh McLennan Agency
825 Maryville Centre Drive | Suite 200
Chesterfield | MO 63017
T +1 314 594 2700
MarshMMA.com

February 24th, 2026

RE: SAK Construction, LLC

To Whom It May Concern,

SAK Construction, LLC is a valued Travelers Casualty and Surety Company of America surety customer. Travelers Casualty and Surety Company of America is one of the most financially sound insurance companies in the United States and enjoys a Best Rating of A++ with financial strength category of XV.

Due to SAK Construction, LLC's reputation, technical expertise, financial strength, quality equipment and experienced labor force, Marsh McLennan Agency is prepared to consider performance and payment bonds for single jobs in the $350,000,000 range with an aggregate work program of $800,000,000.

Any bonds are subject to acceptable review of the contract terms and conditions, bond forms, confirmation of financing, and any other underwriting considerations at the time of the request. It should be understood that any arrangement for bonds is strictly a matter between SAK Construction, LLC and Travelers Casualty and Surety Company of America. We assume no liability to third parties or to you if for any reason we do not execute said bonds.

Over the course of Marsh McLennan Agency's relationship with SAK Construction, LLC**,** we have never had a complaint as respects any of their workmanship or a question as to their ability to perform on any project. Additionally, SAK Construction, LLC's pro-active approach to a safe worksite and a safe labor force enables owners to rest assured that a safe work environment will be provided.

Please feel free to contact me if you have any specific questions regarding SAK Construction, LLC or their surety bond program.

Sincerely,



Andrew P. Thome, Attorney-in-Fact for
Travelers Casualty and Surety Company of America

TRAVELERS

Travelers Casualty and Surety Company of America
Travelers Casualty and Surety Company
St. Paul Fire and Marine Insurance Company

POWER OF ATTORNEY

KNOW ALL MEN BY THESE PRESENTS: That Travelers Casualty and Surety Company of America, Travelers Casualty and Surety Company, and St. Paul Fire and Marine Insurance Company are corporations duly organized under the laws of the State of Connecticut (herein collectively called the "Companies"), and that the Companies do hereby make, constitute and appoint **ANDREW P THOME** of **CHESTERFIELD**, **Missouri**, their true and lawful Attorney(s)-in-Fact to sign, execute, seal and acknowledge any and all bonds, recognizances, conditional undertakings and other writings obligatory in the nature thereof on behalf of the Companies in their business of guaranteeing the fidelity of persons, guaranteeing the performance of contracts and executing or guaranteeing bonds and undertakings required or permitted in any actions or proceedings allowed by law.

IN WITNESS WHEREOF, the Companies have caused this instrument to be signed, and their corporate seals to be hereto affixed, this **21st** day of **April**, **2021**.

State of Connecticut

City of Hartford ss.

By: _____
Robert L. Raney, Senior Vice President

On this the **21st** day of **April**, **2021**, before me personally appeared **Robert L. Raney**, who acknowledged himself to be the Senior Vice President of each of the Companies, and that he, as such, being authorized so to do, executed the foregoing instrument for the purposes therein contained by signing on behalf of said Companies by himself as a duly authorized officer.

IN WITNESS WHEREOF, I hereunto set my hand and official seal.

My Commission expires the **30th** day of **June**, **2026**

_____
Anna P. Nowik, Notary Public

This Power of Attorney is granted under and by the authority of the following resolutions adopted by the Boards of Directors of each of the Companies, which resolutions are now in full force and effect, reading as follows:

RESOLVED, that the Chairman, the President, any Vice Chairman, any Executive Vice President, any Senior Vice President, any Vice President, any Second Vice President, the Treasurer, any Assistant Treasurer, the Corporate Secretary or any Assistant Secretary may appoint Attorneys-in-Fact and Agents to act for and on behalf of the Company and may give such appointee such authority as his or her certificate of authority may prescribe to sign with the Company's name and seal with the Company's seal bonds, recognizances, contracts of indemnity, and other writings obligatory in the nature of a bond, recognizance, or conditional undertaking, and any of said officers or the Board of Directors at any time may remove any such appointee and revoke the power given him or her; and it is

FURTHER RESOLVED, that the Chairman, the President, any Vice Chairman, any Executive Vice President, any Senior Vice President or any Vice President may delegate all or any part of the foregoing authority to one or more officers or employees of this Company, provided that each such delegation is in writing and a copy thereof is filed in the office of the Secretary; and it is

FURTHER RESOLVED, that any bond, recognizance, contract of indemnity, or writing obligatory in the nature of a bond, recognizance, or conditional undertaking shall be valid and binding upon the Company when (a) signed by the President, any Vice Chairman, any Executive Vice President, any Senior Vice President or any Vice President, any Second Vice President, the Treasurer, any Assistant Treasurer, the Corporate Secretary or any Assistant Secretary and duly attested and sealed with the Company's seal by a Secretary or Assistant Secretary; or (b) duly executed (under seal, if required) by one or more Attorneys-in-Fact and Agents pursuant to the power prescribed in his or her certificate or their certificates of authority or by one or more Company officers pursuant to a written delegation of authority; and it is

FURTHER RESOLVED, that the signature of each of the following officers: President, any Executive Vice President, any Senior Vice President, any Vice President, any Assistant Vice President, any Secretary, any Assistant Secretary, and the seal of the Company may be affixed by facsimile to any Power of Attorney or to any certificate relating thereto appointing Resident Vice Presidents, Resident Assistant Secretaries or Attorneys-in-Fact for purposes only of executing and attesting bonds and undertakings and other writings obligatory in the nature thereof, and any such Power of Attorney or certificate bearing such facsimile signature or facsimile seal shall be valid and binding upon the Company and any such power so executed and certified by such facsimile signature and facsimile seal shall be valid and binding on the Company in the future with respect to any bond or understanding to which it is attached.

I, **Kevin E. Hughes**, the undersigned, Assistant Secretary of each of the Companies, do hereby certify that the above and foregoing is a true and correct copy of the Power of Attorney executed by said Companies, which remains in full force and effect.

Dated this **24th** day of **February**, **2026**.

_____
Kevin E. Hughes, Assistant Secretary

To verify the authenticity of this Power of Attorney, please call us at 1-800-421-3880.
Please refer to the above-named Attorney(s)-in-Fact and the details of the bond to which this Power of Attorney is attached.

Docusign Envelope ID: AFCB16A4-B390-89EA-8013-04580053D90F

Ron DeSantis, Governor

Melanie S. Griffin, Secretary

STATE OF FLORIDA
DEPARTMENT OF BUSINESS AND PROFESSIONAL REGULATION

CONSTRUCTION INDUSTRY LICENSING BOARD

THE GENERAL CONTRACTOR HEREIN IS CERTIFIED UNDER THE
PROVISIONS OF CHAPTER 489, FLORIDA STATUTES

HALE, PATRICK D JR

SAK CONSTRUCTION, LLC
864 HOFF ROAD
O FALLON MO 63366

LICENSE NUMBER: CGC1532913

EXPIRATION DATE: AUGUST 31, 2026

Always verify licenses online at MyFloridaLicense.com

ISSUED: 06/13/2024

Do not alter this document in any form.

This is your license. It is unlawful for anyone other than the licensee to use this document.

Docusign Envelope ID: AFCB16A4-B390-89EA-8013-04580053D90F

Southeast Region Letter of Experience

SAK Construction LLC is a pipeline rehabilitation contractor. We specialize in complex underground infrastructure projects, including rehabilitation of wastewater, stormwater and combined sewer pipelines, as well as the construction of large-diameter conveyance tunnels.

Our approximately 115,000 square-foot headquarters, equipment fabrication, product manufacturing and CIPP wet-out facility are located near St. Louis, Missouri, approximately 20 miles west on I-70 from Lambert St. Louis Airport.

As our operations continue to expand across the United States, SAK has established Southeast regional offices in Georgia, Florida and Tennessee, allowing us to effectively service clients thoughout the Southeast. These offices provide local expertise, faster response times and seamless project execution to the infrastructure needs of the region.

CAPABILITIES

- Cured-in-place pipe lining (gravity) -6” to 108” diameter
- Cured-in-place pipe lining (pressure) – 6” to 48” diameter
- Large Diameter Tunneling Utilizing TBM up to 24-foot & Hand Mining up to 32-foot arch
- Large Diameter Sliplining – 36” pipe and above
- Large Diameter Geopolymer
- SPR Spiral Wound PVC & PE
- Shotcrete
- Shaft Excavation
- Sewer Bypass
- Sewer Cleaning & CCTV Inspection
- Structure Rehabilitation
- Cured-In-Place Pipe (CIPP) Tube Manufacturing

COMPANY HEADQUARTERS

864 Hoff Road
O’Fallon, MO 63366
636-385-1000
636-385-1100
bidcippe@sakcon.com

SOUTHEAST REGION OFFICES

Georgia Office
3265 McCall Drive
Doraville, GA 30340

Florida Office
1767 Benbow Ct., Ste C
Apopka, FL 32703

Nashville Office
47 Fern Avenue
Nashville, TN 37207

SAK™

Pipeline Infrastructure. Solved.™

Docusign Envelope ID: AFCB16A4-B390-89EA-8013-04580053D90F

Founded in 2006 by industry pioneers Tom Kalishman, Jerry Shaw, Jr. and the late Bob Affholder. SAK was built on a foundation over 100 years of combined experience in pipeline rehabilitation. These three visionaries have been instrumental in developing and advancing innovative trenchless technologies, transforming the way infrastructure is maintained and restored. Their legacy of expertise and commitment to innovation continues to drive our mission to deliver cutting-edge solutions for the pipeline rehabilitation industry.







Tom Kalishman Co-Founder, Chairman, CEO	Jerry Shaw Co-Founder and President	Robert Affholder Co-Founder *(In Memoriam)*
• Co-Founder and Chairman SAK LLC; 2006 to Present • Board of Directors, Insituform Technologies, Inc. (ITI) from 1998 to 2005. • President of United Pipeline Systems (ITI subsidiary) in 1998. • Director of East Regions, ITI 1997 to 1998. Business unit annual revenues exceeding $150mm. • General Manager Southeast Region ITI from 1996 to 1997. • Operations Manager Southeast Region ITI from 1994 to 1996. • Operations Management Insituform Mid America from 1991 to 1993 • MBA Northwestern University; Evanston, IL. • B.S. in Economics, Wharton School at the University of Pennsylvania.	• Co-Founder and President SAK LLC; 2006 to Present • Over 50 years' experience in the tunnel and pipeline rehabilitation industry. • Vice President of Affholder, Inc. (ITI tunneling subsidiary) for 18 years from 1987 to 2005, responsible for the overall operations of the company, which included estimating, field operations, equipment acquisitions and cost projects. • Day to day management of $25mm tunneling business which grew to $120mm annually. • Project manager of various tunnel projects 1983 to 1987. • B.S. in Business Administration, Southwest Missouri State University (now Missouri St. Univ.).	• Board of Directors and Executive Vice President, Insituform Technologies, Inc. 1995 to 2005. • Board of Directors and President, Insituform Mid-America from 1986 to 1995. • Formed Affholder, Inc. in 1968 to compete in the tunneling industry. Purchased first Insituform franchise in 1982, and took the company public as Insituform Mid-America, with Affholder, Inc. and six (6) Insituform franchise territories becoming wholly owned subsidiaries. Company revenues exceeded $125 million. • 1996 Trenchless Technology Person-of-the-Year. • 1995 key facilitator of merger between Insituform Mid-America and Insituform Technologies, Inc., resulting in his being put in charge of all North American contracting for the corporation. • President of Affholder, Inc. from 1968 to 2002.

Docusign Envelope ID: AFCB16A4-B390-89EA-8013-04580053D90F

Joe Feuerborn
President SAK Construction, LLC

- Over 29 years' experience in the CIPP industry.
- In 2020, promoted to VP, GM CIPP Division, involved in the overall operations and management of the company's pipeline rehabilitation division nationwide.
- Pacific Region General Manager of SAK from 2011 to 2020, responsible for the management of business development, project management, engineering, and operations teams.
- Responsible for all project acquisition and execution for SAK in the Pacific Region.
- Vice President / General Manager of Pipenology Inc. from 2008 to 2011.
- District Manager of Pacific Region at Insituform Technologies from 2004 to 2006.
- Project Executive for Insituform Technologies, Inc. from 2001 to 2004.
- Lead Project Manager for Insituform Technologies, Inc. from 1999 to 2001.
- Estimator/Project Manager for Insituform Technologies, Inc. from 1996 to 1999.
- B.S. in Civil Engineering, University of Missouri.

Steve Hirtz
Vice President Rehab Operations

- Over 40 years' experience in the tunneling and pipeline rehabilitation industry.
- Vice President of Rehab Operations for SAK from May 2009 to present.
- General Manager for Mid America Pip1e Services from November 2007 to May 2009. Responsible for the day-to-day operations of the pipeline cleaning, CCTV Inspection and Assessment work done by the Company's crews.
- Director of Field Operations for Insituform Technologies, Inc. from June 2004 to November 2007. Responsible for North American Field Operations of 65 crews producing $300 million in revenue annually.
- Senior Operations Manager for Insituform Technologies West Coast Operations from March 2000 to June 2004. Responsible for day-to-day field operations for the West Coast based in Benicia CA.
- Operations Manager for Insituform Technologies/Insituform Mid-America from March 1990 to March 2000. Responsible for the day-to-day field operations for the Midwest based in Chesterfield MO.
- Superintendent for Insituform Mid-America from 1985 to March 1990. Directly managed pipe rehabilitation crews in the Midwest.

Brian Ackerman
Vice President – Southeast Region

- Over 20 years' experience in the wastewater industry.
- Southeast Region General Manager for SAK from August 2020 to present, responsible for the management of business development, project management, engineering, and operations teams.
- In 2015 he was promoted to Senior Project Manager, moved to San Antonio, and started building a Project Management team working mostly for San Antonio Water System.
- joined SAK in 2012 as Project Manager overseeing work in Arizona and Nevada.
- Arizona/Nevada Manager for Professional Pipe Services (Pro-Pipe) from September 2006 to October 2012.
- Utility Supervisor for the City of Peoria from September 2001 to September 2006.
- Utility Work for the City of Seattle from March 1999 to September 2001.
- Certificate of Public Administration, Rio Salado College

Tom Qualls
Chief Estimator Rehab Operations

- Over 25 years of heavy civil construction experience and over 16 years' experience in trenchless rehabilitation industry including CIPP, SPR, Geopolymer and tunneling.
- Chief Estimator of SAK from January 2021 to present, responsible for the management of estimating team in multiple regions. Prepares and reviews cost estimates, engineering designs, and technical plans.
- Lead Estimator of SAK from July 2012 to December 2020, prepared takeoffs, estimates, engineering designs, and negotiated with subs and clients, while leading team of estimators.
- Project Engineer/Project Manager/Estimator for SAK from 2009 to June 2012, performed estimating duties while managing special projects.
- S.M. Wilson & Co., Concrete Strategies, Aquaterra Enviro Sol., Project Engineer, 2006- 2009
- W.L. Hailey & Co., Inc., Project Engineer, Shoal Creek Tunnel Project in Austin, TX 2005.
- Assisted Living Construction Company, Project Engineer Intern, Summer 2003
- Sterling Surveying and Engineering, Instrument/Rod Operator, 2000-2002
- Master of Business Administration, Southern Illinois University, Edwardsville, IL.
- B.S. in Civil Engineering, University of Missouri, Rolla, Missouri.

Docusign Envelope ID: AFCB16A4-B390-89EA-8013-04580053D90F

Dan Banken
Area Manager – Florida/Carolina Region

- Over 30 years' experience in the pipeline rehabilitation industry with CIPP.
- Area Manager for SAK from August 2024 to present, directs, manages and coordinates all activities.
- Regional Vice President Southeast Region for Inliner Solutions from September 2023 – August 2024.
- Area Director Florida for Inliner Solutions from June 2022 to September 2023.
- District Manager Florida for Granite Inliner from January 2021 to June 2022.
- Area Manager Minnesota for Granite Inliner from May 2019 to December 2020.
- Vice President for Lametti & Sons Inc from June 2013 to May 2019.
- Estimator/Project Manager for Lametti & Sons Inc from June 1995 to June 2013.

Richard Robertson
Construction Manager – Florida/Carolina Region

- Over 26 years' experience in the pipeline rehabilitation industry with CIPP.
- Construction Manager for SAK from 2024 to present, responsible for managing subcontractors in the areas of bypass installation, testing and removal, traffic control, manhole rehab, excavation of bypass trenches and manhole installation. Oversee equipment rentals, notifying businesses and homeowners, attending owners meetings and coordinating with project managers and owners, liaison with inspectors.
- Construction Manager for Inliner Solutions from 1994-2024.

Stan Krause
Construction Manager – Florida/Carolina Region

- Over 30 years' of experience in the pipeline rehabilitation industry.
- Construction Manager for SAK from 2025 to present.
- Project Manager for SAK from March 2019 to 2025, responsible for managing multiple CIPP projects and maintaining open communication with the clients, inspectors, subcontractors, and residents throughout the life of the project.
- General Superintendent for SAK from February 2013 to March 2019, responsible for all phases of CIPP installation projects, crew management, coordination with subcontractors and General Contractors.
- General Superintendent for Lanzo Trenchless Technologies from May 2011 to February 2013.
- General Superintendent for Insituform Technologies, Inc. from 1990 to 2008.

Chris Hee
Project Manager – Florida/Carolina Region

- Over 12 years' experience in the pipeline rehabilitation industry.
- Project Manager for SAK from June 2024 to present, responsible for managing multiple CIPP projects and maintaining open communication with the clients, inspectors, subcontractors, and residents throughout the life of the project.
- Project Manager for Inliner Solutions from 2016-2024.
- Wetout Manager for Inliner Solutions from 2013-2016.
- B.S. Civil Engineering, University of Florida.

Taylor Savoie
Project Manager – Florida/Carolina Region

- Over 8 years' experience in the pipeline rehabilitation industry.
- Project Manager for SAK from February 2025 to present, responsible for managing multiple CIPP projects and maintaining open communication with the clients, inspectors, subcontractors, and residents throughout the life of the project.
- Associate Project Manager for HBK Engineering from 2023 to 2025.
- Senior Project Manager for Inliner Solutions from 2022 to 2023.
- Project Manager for Layne, A Granite Company from 2018 to 2019.
- Wireline Field Engineer for Schlumberger from 2017 to 2018.
- B.S. Petroleum Engineering, Lousian State University.

Nick Reed
General Superintendent – Florida/Carolina Region

- Over years' experience in the trenchless pipeline rehabilitation industry.
- General Superintendent for SAK from 2024 to present. Responsible for all phases of CIPP installation projects, crew management, coordination with subcontractors and General Contractors.
- Operations Manager for Inliner Solutions from 2008-2024.

Scott Hoffman
Superintendent – Florida/Carolina Region

- Over 16 years' experience in the trenchless pipeline rehabilitation industry.
- Superintendent for SAK from 2023 to present, responsible for responsible for all phases of CIPP installation projects, crew management, coordination with subcontractors and General Contractors.
- Foreman for SAK from 2012-2021.
- Foreman for Logopro from 2009 to 2012.

Docusign Envelope ID: AFCB16A4-B390-89EA-8013-04580053D90F

Harry Miller
Safety Director

- Over 20 years' experience working as a safety consultant and safety manager for firms such as Black & Veatch and The Carpenters District Council of Greater St. Louis & Vicinity, joined SAK as Safety Director in January 2015.
- Division Safety Manager, Black & Veatch Construction Inc. Responsibilities include supervision of safety professionals on projects within the continental US and Alaska.
- Is a Certified Safety Professional (CSP) and Construction Health and Safety Technician (CHST) through the Board of Certified Safety Professionals (BCSP).
- Extensive knowledge of OSHA guidelines has Confined Space Training and Haz-Woper Certification.
- Occupational Safety and Health Administration 500 & 501 trainer.
- Professional Member American Society of Safety Engineers.
- B.A. in Human Resources, Lindenwood University
  MSA in Business, Lindenwood University

Docusign Envelope ID: AFCB16A4-B390-89EA-8013-04580053D90F

Trenchless Experience

SAK Key Personnel have installed millions of linear feet of cured-in-place pipe and managed the installation of tens of millions of linear feet of cured-in-place-pipe. SAK's personnel are among the most experienced and well known in the industry. SAK as a Company has installed over 16 million feet of CIPP liner since being formed in 2006.

CIPP Liner Materials

SAK provides a CIPP product that is proven technology. SAK utilizes several proven CIPP materials including Pipenology CIPP Liner and United Felts formerly Applied Felts.

Pipenology is a registered ISO 9001:2000 company which has produced over 10 million feet of SAK's installation of CIPP. Pipenology uses several stringent Quality Control measures to ensure an excellent final product.

Inversion and Pull-In-Place Polyester Felt Liner manufactured by United Felts, formerly known as Applied Felts, with its parent company, Rawson Textiles, has provided polymer coated felt tubes for use in the CIPP lining industry for more than twenty-eight (28) years. United Felts is a registered ISO 9001:2015 company which has produced CIPP tube installed by more than 300 contractors operating in more than 30 countries. More than 200 million linear feet of United Felts product have been installed. United Felts is the oldest manufacture from raw materials to finished CIPP liner in the world. United Felts formerly Applied Felts was the sole supplier of coated felt materials worldwide until the late 1980s, when Insituform Technologies, Inc. began manufacturing their own coated felt CIPP tubes.

SAK Construction, LLC is certified by Pipenology and United Felts to install their lining materials, follows their recommended installation procedures, and provides engineering support and technical assistance. Accompanying this document is a Qualification & Process License Certification for SAK Construction, LLC, along with literature on these proven liner materials, and a copy of the ISO 9001:2000 Certificates of Registration.

SAK utilizes cured-in-place pipe resins manufactured by Interplastics, leaders in the CIPP resin industry, and registered ISO 9001:2000 companies. The third-party test results supporting the short-term and long-term performance of the resin products we install are available upon request.

SAK has two permanent wet-out facilities where all the CIPP liners are wet-out for the United States:

- Headquarters Building – O'Fallon, MO
- West Regional Office Rocklin, CA

SAK installs cured-in-place pipe in accordance with ASTM F1216 for inversion and curing.

SAK - Current Job Report

Job	Project Description	Owner	City	State	County	Department	Region	Project Manager	Start Month	Contract Amount	% Complete
10804.60	Kent County, MI - Contract #23-56: Pipe Lining Services	Board of County Rd Comm Kent County	Various	MI	Kent	CIPP - MI	Midwest	Derrick Witz	6/23	$ -	0%
10804.80	DeKalb, GA - Master Contract 1283955	DeKalb County	Decatur	GA	DeKalb	CIPP - GA	Southeast	Nakeita Love	3/22	$ -	0%
10804.89	DeKalb County, GA - Non-Comprehensive Package 2	DeKalb County	Decatur	GA	DeKalb	CIPP - GA	Southeast	Nakeita Love	9/23	$ 4,060,063.30	111%
10804.90	DeKalb County, GA - Comprehensive Release I	DeKalb County	Decatur	GA	DeKalb	CIPP - GA	Southeast	Gabe Cummings	1/24	$ 6,022,352.74	121%
10804.91	DeKalb County, GA - Comprehensive Release II	DeKalb County	Decatur	GA	DeKalb	CIPP - GA	Southeast	Nakeita Love	6/24	$ 8,909,435.37	105%
10804.92	DeKalb County, GA - Comprehensive Release III	DeKalb County	Decatur	GA	DeKalb	CIPP - GA	Southeast	Nakeita Love	12/24	$ 6,698,797.48	76%
10804.93	DeKalb County, GA - Non-Comprehensive 3	DeKalb County	Decatur	GA	DeKalb	CIPP - GA	Southeast	Nakeita Love	3/25	$ 1,052,844.25	31%
10804.94	DeKalb County, GA - CAP Dev N DeKalb Mall Ph 3	DeKalb County	Decatur	GA	DeKalb	CIPP - GA	Southeast	Nakeita Love	3/25	$ 1,991,415.79	173%
10804.95	DeKalb County, GA - Comprehensive Release IV	DeKalb County	Decatur	GA	DeKalb	CIPP - GA	Southeast	Nakeita Love	9/25	$ 6,031,887.90	0%
10804.96	DeKalb County, GA - Peachtree Rd 24" Water Main BulletLiner	DeKalb County	Decatur	GA	DeKalb	BulletLiner - GA	Southeast	Nakeita Love	10/25	$ 1,684,000.00	0%
17025.	Indianapolis, IN - Citizens, Large Dia Sewer Rehab Program	Citizens Energy Group	Indianapolis	IN	Marion	CIPP - IN	Midwest	Tim Bussen	4/17	$ -	0%
17025.45	Indianapolis, IN - Shelby & Nelson Large Diameter Sewer Repa	Citizens Energy Group	Indianapolis	IN	Marion	CIPP - IN	Midwest	Chris Vogt	9/20	$ -	0%
17025.46	Indianapolis, IN - 92RR04397, Upper Castleton LDSR	Citizens Energy Group	Indianapolis	IN	Marion	CIPP - IN	Midwest	Chris Vogt	9/20	$ 1,060,877.00	102%
17025.58	Indianapolis, IN - 34th & Arlington LDSR	Citizens Energy Group	Indianapolis	IN	Marion	CIPP - IN	Midwest	Chris Vogt	8/21	$ -	0%
17025.59	Indianapolis, IN - 75th & LaSalle LDSR	Citizens Energy Group	Indianapolis	IN	Marion	CIPP - IN	Midwest	Chris Vogt	8/21	$ -	0%
17025.60	Indianapolis, IN - Washington & Devon LDSR	Citizens Energy Group	Indianapolis	IN	Marion	CIPP - IN	Midwest	Chris Vogt	8/21	$ -	0%
17025.61	Indianapolis, IN - Sheridan Ave LDSR	Citizens Energy Group	Indianapolis	IN	Marion	CIPP - IN	Midwest	Chris Vogt	8/21	$ -	0%
18102.04	Port St. Lucie, FL - Rehab Gravity Sewers, 2024-2025	City of Port St. Lucie	Port St. Lucie	FL	St. Lucie	CIPP - FL	Southeast	Chris Hee	8/25	$ 266,235.00	88%
18108.	Phoenix, AZ - 4108JOC167, Contract 148532 Small Dia SS Rehab	City of Phoenix	Phoenix	AZ	Maricopa	CIPP - AZ	Pacific	Victor Villalobos	11/18	$ -	0%
19014.	St. Louis, MO - MSD, Mackenzie Public, 21745, 12511-015.1	Metropolitan St. Louis Sewer District	St. Louis	MO	St. Louis	CIPP - MO	Midwest	Travis Jerrels	3/19	$ 5,577,737.00	93%
19120.	Arkansas Nuclear One Project, AR - T & M	Arkansas Nuclear One Project	Russellville	AR	Pope	CIPP - AR	Southeast	Not Applicable	11/19	$ -	0%
20059.	Baltimore, MD - CH2M Hill, 148014511, Honeywell, DMT, Master	Honeywell International, Inc.	Baltimore	MD	Baltimore	CIPP - MD	Atlantic	Ken Sprau	6/20	$ -	0%
20059.06	Baltimore, MD - Jacobs, Honeywell 148057847, DMT Storm	Honeywell International, Inc.	Baltimore	MD	Baltimore	CIPP - MD	Atlantic	Ken Sprau	8/24	$ 125,000.00	0%
20082.	St. Petersburg, FL - 20013-111, SAN Annual CIPP Lining FY20	City of St. Petersburg	St. Petersburg	FL	Pinellas	CIPP - FL	Southeast	Chris Hee	9/20	$ -	0%
20082.03	St. Petersburg, FL - 20013-111; Release 3	City of St. Petersburg	St. Petersburg	FL	Pinellas	CIPP - FL	Southeast	Chris Hee	3/22	$ 5,936,000.00	109%
20082.04	St. Petersburg, FL - 20013-111; Release 4	City of St. Petersburg	St. Petersburg	FL	Pinellas	CIPP - FL	Southeast	Chris Hee	2/24	$ 1,000,000.00	0%
21033.	Baltimore County, MD - 16037 SX0, Patapsco Basin 10	Baltimore County Dept Public Works	Catonsville	MD	Baltimore	CIPP - MD	Atlantic	Ken Sprau	5/21	$ 4,110,777.50	88%
21063.01	Tyler, TX - CO to 54" Black Fork Creek Outfall	City of Tyler	Tyler	TX	Smith	CIPP - TX	Pacific	Amir Alzer	8/24	$ 2,118,850.73	87%
21120.	Pima County, AZ - Ellison-Mills, Master Agreement	Pima County Regional Wastewater Reclamation	Tucson	AZ	Pima	CIPP - AZ	Pacific	Victor Villalobos	11/21	$ -	0%
21125.	Ann Arbor, MI - 2020 & 2021 Sewer Lining Project	City of Ann Arbor	Ann Arbor	MI	Washtenaw	CIPP - MI	Midwest	Dawn Young	11/21	$ 5,946,305.00	72%
21138.	WSSC, MD - CI7064A21, 16781, Prince George's County	Washington Suburban Sanitary Commission	Bethesda	MD	Prince George's	CIPP - MD	Atlantic	Zach Adcock	12/21	$ -	0%
21138.05	WSSC, MD - CI7064A21, CNLR6851K20, Piscataway Creek TO 04-0	Washington Suburban Sanitary Commission	Bethesda	MD	Prince George	CIPP - MD	Atlantic	Zach Adcock	10/23	$ 2,769,944.18	74%
21138.10	WSSC, MD - CI7064A21, CKCILRMH7311B22, Western 14-10	Washington Suburban Sanitary Commission	District Heights	MD	Prince George's	CIPP - MD	Atlantic	Zach Adcock	4/25	$ 8,161,302.33	13%
21138.24	WSSC, MD - CI7064A21, CI7596B23, Western Branch TO 14-24	Washington Suburban Sanitary Commission	Bethesda	MD	Prince George's	CIPP - MD	Atlantic	Zach Adcock	4/24	$ 726,605.19	38%
21139.	WSSC, MD - CI7063A21, 16782, Montgomery County	Washington Suburban Sanitary Commission	Bethesda	MD	Montgomery	CIPP - MD	Atlantic	Zach Adcock	12/21	$ -	0%
21139.01	WSSC, MD - CI7063A21, CI7446B22, Rock Creek TO 05-18	Washington Suburban Sanitary Commission	Bethesda	MD	Montgomery	CIPP - MD	Atlantic	Zach Adcock	1/24	$ 1,696,272.30	55%
21139.02	WSSC, MD - CI7063A21, CKCICN7352B22 Seneca Ck TO 15-02	Washington Suburban Sanitary Commission	Bethesda	MD	Montgomery	CIPP - MD	Atlantic	Zach Adcock	1/24	$ 2,366,369.42	0%
21139.03	WSSC, MD - CI7063A21, CICRLR7429B22, Seneca Crk TO 15-12	Washington Suburban Sanitary Commission	Bethesda	MD	Montgomery	CIPP - MD	Atlantic	Zach Adcock	7/24	$ 3,004,280.78	60%
21148.	Pima County, AZ - Borderland, Job Order Master Agreement	Pima County Regional Wastewater Reclamation	Tucson	AZ	Pima	CIPP - AZ	Pacific	Victor Villalobos	1/22	$ -	0%
22006.	Tucson, AZ - Hunter Contracting, Master	Pima County Regional Wastewater Reclamation	Tucson	AZ	Pima	CIPP - AZ	Pacific	Victor Villalobos	1/22	$ -	0%
22035.	San Antonio, TX - Central Sewershed Pkg 14, CO-00524-01	San Antonio Water System	San Antonio	TX	Bexar	CIPP - TX	Pacific	Roger Terrazas	3/22	$ 9,111,548.10	89%
22078.	St. Louis, MO - MSD, Lateral Connection Repair Installs	Metropolitan St. Louis Sewer District	Various	MO	St. Louis	CIPP - MO	Midwest	Travis Jerrels	6/22	$ -	0%
22082.	San Antonio, TX - 2020 CMOM Pkg 1, CO-00486-01, Job 20-4516	San Antonio Water System	San Antonio	TX	Bexar	CIPP - TX	Pacific	Roger Terrazas	6/22	$ 10,817,603.13	93%
22123.	Baltimore County, MD - 21021 SX0, Redhouse Run Sewershed	Baltimore County Dept Public Works	Baltimore	MD	Baltimore	CIPP - MD	Atlantic	Ken Sprau	10/22	$ 6,241,841.00	92%
22141.	Howard County, MD - IFB 2023-17, CA010-2023, S-6601	Howard County, MD	Various	MD	Howard	CIPP - MD	Atlantic	Ken Sprau	12/22	$ -	0%
22141.07	Howard County, MD - IRB 2023-17, Contract 4400004706, Task 7	Howard County, MD	Various	MD	Howard	CIPP - MD	Atlantic	Ken Sprau	9/25	$ 5,000.00	100%
22141.08	Howard County, MD - IR 2023-17, Contract 4400004706, Task 8	Howard County, MD	Various	MD	Howard	CIPP - MD	Atlantic	Ken Sprau	10/25	$ 180,900.00	0%
22151.	Chattanooga, TN - Focused SSES, W-22-022-201	City of Chattanooga	Chattanooga	TN	Hamilton	CIPP - TN	Southeast	Brian Ackerman	2/23	$ 950,992.25	0%
22151.01	Chattanooga, TN - W-20-024-201, TN River 8 Basin	City of Chattanooga	Chattanooga	TN	Hamilton	CIPP - TN	Southeast	Dan Graham	4/23	$ 6,315,746.50	89%
22151.02	Chattanooga, TN - W-21-009-201, South Chic Creek 9	City of Chattanooga	Chattanooga	TN	Hamilton	CIPP - TN	Southeast	Austin Preiss	4/23	$ 4,876,027.25	105%
22151.03	Chattanooga, TN - W-22-008-201, TN River 5	City of Chattanooga	Chattanooga	TN	Hamilton	CIPP - TN	Southeast	Austin Preiss	8/23	$ 4,751,291.10	98%
22151.04	Chattanooga, TN - W-23-013-201, Lookout Creek 3	City of Chattanooga	Chattanooga	TN	Hamilton	CIPP - TN	Southeast	Austin Preiss	7/24	$ 344,947.02	73%
22151.05	Chattanooga, TN - W-23-014-201, Chatt Creek 2	City of Chattanooga	Chattanooga	TN	Hamilton	CIPP - TN	Southeast	Austin Preiss	8/24	$ 516,751.22	67%
22151.06	Chattanooga, TN - W-23-015-201, Chatt Creek 3	City of Chattanooga	Chattanooga	TN	Hamilton	CIPP - TN	Southeast	Austin Preiss	8/24	$ 966,233.59	41%
22151.07	Chattanooga, TN - W-24-010-201, TN River 6	City of Chattanooga	Chattanooga	TN	Hamilton	CIPP - TN	Southeast	Austin Preiss	8/24	$ 469,449.64	49%
22151.08	Chattanooga, TN - W-24-011-201, Dobbs Branch 1	City of Chattanooga	Chattanooga	TN	Hamilton	CIPP - TN	Southeast	Austin Preiss	8/24	$ 579,094.64	71%

22151.09	Chattanooga, TN - W-24-012-201, Citico Creek 4	City of Chattanooga	Chattanooga	TN	Hamilton	CIPP - TN	Southeast	Austin Preiss	8/24	$ 583,714.13	66%
22151.10	Chattanooga, TN - W-24-013-201, Chatt Creek 6	City of Chattanooga	Chattanooga	TN	Hamilton	CIPP - TN	Southeast	Austin Preiss	8/24	$ 363,395.25	72%
22151.11	Chattanooga, TN - W-24-014-201, Dobbs Branch 2	City of Chattanooga	Chattanooga	TN	Hamilton	CIPP - TN	Southeast	Austin Preiss	8/24	$ 625,852.88	78%
22151.12	Chattanooga, TN - W-24-015-201, Mountain Creek 2	City of Chattanooga	Chattanooga	TN	Hamilton	CIPP - TN	Southeast	Austin Preiss	8/24	$ 520,730.73	75%
22151.13	Chattanooga, TN - W-24-016-201, Chatt Creek 1	City of Chattanooga	Chattanooga	TN	Hamilton	CIPP - TN	Southeast	Austin Preiss	3/25	$ 509,883.97	48%
22151.14	Chattanooga, TN - W-24-022-201, Chatt Creek 5	City of Chattanooga	Chattanooga	TN	Hamilton	CIPP - TN	Southeast	Austin Preiss	3/25	$ 766,474.65	59%
22151.15	Chattanooga, TN - W-24-020-201, Citico Creek 2	City of Chattanooga	Chattanooga	TN	Hamilton	CIPP - TN	Southeast	Austin Preiss	3/25	$ 445,146.76	12%
22151.16	Chattanooga, TN - W-24-018-201, Citico Creek 3	City of Chattanooga	Chattanooga	TN	Hamilton	CIPP - TN	Southeast	Austin Preiss	3/25	$ 633,619.38	0%
22151.17	Chattanooga, TN - W-24-019-201, Citico Creek 5	City of Chattanooga	Chattanooga	TN	Hamilton	CIPP - TN	Southeast	Austin Preiss	3/25	$ 683,217.06	0%
22151.21	Chattanooga, TN - W-24-011-202, Dobbs Branch 1	City of Chattanooga	Chattanooga	TN	Hamilton	CIPP - TN	Southeast	Samuel Dickson	11/25	$ 417,443.84	0%
22151.22	Chattanooga, TN - W-24-014-202, Dobbs Branch 2	City of Chattanooga	Chattanooga	TN	Hamilton	CIPP - TN	Southeast	Samuel Dickson	11/25	$ 1,808,662.91	0%
23010.	Chattanooga, TN - Sanitary Sewer, W-22-004-201	City of Chattanooga	Chattanooga	TN	Hamilton	CIPP - TN	Southeast	Brian Ackerman	2/23	$ 4,000,000.00	0%
23023.	St. Louis, MO - MSD, CITY, IR 2023 B, 22241, 13019-015.1	Metropolitan St. Louis Sewer District	St. Louis	MO	City	CIPP - MO	Midwest	Travis Jerrels	4/23	$ 3,458,091.00	91%
23023.01	St. Louis, MO - MSD, COUNTY, IR 2023 B, 22241, 13019-015.1	Metropolitan St. Louis Sewer District	County	MO	St. Louis & Unincc	CIPP - MO	Midwest	Travis Jerrels	4/23	$ -	0%
23024.	St. Louis, MO - MSD, Stormwater IR 2023, 22243, 13128-015.1	Metropolitan St. Louis Sewer District	County	MO	St. Louis & Unincc	CIPP - MO	Midwest	Travis Jerrels	4/23	$ 4,460,947.50	78%
23026.	Lee's Summit, MO - 2023-028-2, CMP Rehab Project	City of Lee's Summit	Lee's Summit	MO	Jackson	CIPP - MO	Midwest	Nick Jacobs	4/23	$ -	0%
23026.02	Lee's Summit, MO - PSA Rehab, Timberbrooke & SW 13th Ter	City of Lee's Summit	Lee's Summit	MO	Jackson	CIPP - MO	Midwest	Nick Jacobs	5/25	$ 169,526.52	100%
23026.03	Lee's Summit, MO - PSA Rehab, 1912 SE 6th Terrace	City of Lee's Summit	Lee's Summit	MO	Jackson	CIPP - MO	Midwest	Nick Jacobs	10/25	$ 26,579.81	100%
23026.04	Lee's Summit, MO - PSA Rehab, 2410-2891 SW 13th Terrace	City of Lee's Summit	Lee's Summit	MO	Jackson	CIPP - MO	Midwest	Nick Jacobs	10/25	$ 41,632.46	100%
23026.05	Lee's Summit, MO - PSA Rehab, Village Fair, Ph 1	City of Lee's Summit	Lee's Summit	MO	Jackson	CIPP - MO	Midwest	Nick Jacobs	12/25	$ 365,830.77	0%
23030.	St. Louis, MO - MSD, IR 2023 C, 22261, 13720-015.1	Metropolitan St. Louis Sewer District	St. Louis	MO	City	GEOKRETE - MC	Midwest	Travis Jerrels	4/23	$ 2,110,290.00	100%
23039.	WSSC, MD - Ross Contracting, 16781-CI7064A21, R&R in PG Coun	Washington Suburban Sanitary Commission	Bethesda	MD	Prince George's	CIPP - MD	Atlantic	Zach Adcock	5/23	$ -	0%
23043.	Phoenix, AZ - JOC216, 158324, Sanitary Sewer Rehab	City of Phoenix	Phoenix	AZ	Maricopa	CIPP - AZ	Pacific	Victor Villalobos	5/23	$ -	0%
23043.01	Phoenix, AZ - 4108JOC216, 158324, JOA 001	City of Phoenix	Phoenix	AZ	Maricopa	CIPP - AZ	Pacific	Victor Villalobos	1/24	$ 1,358,247.41	81%
23043.02	Phoenix, AZ - 4108JOC216, 158324, JOA 002	City of Phoenix	Phoenix	AZ	Maricopa	CIPP - AZ	Pacific	Victor Villalobos	4/24	$ 500,000.00	100%
23043.03	Phoenix, AZ - 4108JOC216, 158324, JOA 003	City of Phoenix	Phoenix	AZ	Maricopa	CIPP - AZ	Pacific	Victor Villalobos	12/24	$ 1,271,225.50	76%
23043.04	Phoenix, AZ - 4108JOC216, 158324, JOA 004	City of Phoenix	Phoenix	AZ	Maricopa	CIPP - AZ	Pacific	Victor Villalobos	9/25	$ 4,000,000.00	0%
23053.	CIPP Testing - Liner Thickness & Pressure					CIPP - MO	Midwest	Not Applicable	6/23	$ -	0%
23062.	Kansas City, MO - Kissick, 23-023-04, Buckeye Creek Area	City of Kansas City	Kansas City	MO	Jackson & Platte	CIPP - MO	Midwest	Zachary Ericson	6/23	$ 3,451,419.00	112%
23074.	St. Clair Shores, MI - 2023 Sewer Rehab CIPP Lining	City of St. Clair Shores	St. Clair Shores	MI	Macomb	CIPP - MI	Midwest	Dawn Young	7/23	$ 851,657.42	100%
23080.	Mount Clemens, MI - 072303, 2023 Sewer Rehab	City of Mount Clemens	Mount Clemens	MI	Macomb	CIPP - MI	Midwest	Dawn Young	8/23	$ 463,700.00	93%
23081.	Royal Oak, MI - S2302, 2023 Sewer Lining	City of Royal Oak	Royal Oak	MI	Oakland	CIPP - MI	Midwest	Brandon Stangle	8/23	$ 739,317.50	97%
23106.	St. Louis, MO - MSD, Riverview Dr, 53017, 10876-015.1	Metropolitan St. Louis Sewer District	St. Louis	MO	City	GEOKRETE - MC	Midwest	Travis Jerrels	10/23	$ 667,435.00	88%
23114.	Pittsburgh, PA - 2023 Small Dia Sewer Rehab Contract 3	The Pittsburgh Water & Sewer Authority	Pittsburgh	PA	Allegheny	CIPP - PA	Atlantic	David Moon	10/23	$ 5,495,536.56	100%
23117.	Palo Alto, CA - IFB 189237, Jt Inter Sewer Rehab Ph 1	City of Palo Alto	Palo Alto	CA	Santa Clara	CIPP - CA	Pacific	Todd Chalk	11/23	$ 7,400,595.21	149%
23123.	Indianapolis, IN - Citizens, Collection System Renewal Progr	Citizens Energy Group	Indianapolis	IN	Marion	CIPP - IN	Midwest	Chris Vogt	11/23	$ -	0%
23123.06	Indianapolis, IN - 92RR03705, Blue Hill Circle SDSR	Citizens Energy Group	Indianapolis	IN	Marion	CIPP - IN	Midwest	Chris Vogt	1/24	$ -	0%
23123.07	Indianapolis, IN - 92RR03733, 62nd & Winpenny FMSR	Citizens Energy Group	Indianapolis	IN	Marion	CIPP - IN	Midwest	Chris Vogt	1/24	$ 788,714.75	10%
23123.09	Indianapolis, IN - 92RR03708, Brewster & Kings Cove SDSR	Citizens Energy Group	Indianapolis	IN	Marion	CIPP - IN	Midwest	Chris Vogt	1/24	$ 301,364.60	84%
23123.10	Indianapolis, IN - 92RR03716, English & Sherman LDSR	Citizens Energy Group	Indianapolis	IN	Marion	CIPP - IN	Midwest	Chris Vogt	1/24	$ -	0%
23123.13	Indianapolis, IN - 92RR06548, Countywide SDSR	Citizens Energy Group	Indianapolis	IN	Marion	CIPP - IN	Midwest	Chris Vogt	2/24	$ 521,884.50	166%
23123.14	Indianapolis, IN - 92RR04385, Foltz St LDSR	Citizens Energy Group	Indianapolis	IN	Marion	CIPP - IN	Midwest	Chris Vogt	2/24	$ 834,032.43	0%
23123.15	Indianapolis, IN - Ralston & Schofield LDSR	Citizens Energy Group	Indianapolis	IN	Marion	CIPP - IN	Midwest	Chris Vogt	2/24	$ -	0%
23123.16	Indianapolis, IN - Bean Creek LDSR	Citizens Energy Group	Indianapolis	IN	Marion	CIPP - IN	Midwest	Chris Vogt	3/24	$ -	0%
23123.17	Indianapolis, IN - Devon Creek SDSR	Citizens Energy Group	Indianapolis	IN	Marion	CIPP - IN	Midwest	Chris Vogt	4/24	$ -	0%
23123.20	Indianapolis, IN - 92TU00126, Harding Interceptor Rehab	Citizens Energy Group	Indianapolis	IN	Marion	GEOKRETE - IN	Midwest	Chris Vogt	5/24	$ 15,430,023.46	80%
23123.22	Indianapolis, IN - West Interceptor	Citizens Energy Group	Indianapolis	IN	Marion	CIPP - IN	Midwest	Chris Vogt	5/24	$ -	0%
23123.34	Indianapolis, IN - 92RR06614, LS402 Force Main	Citizens Energy Group	Indianapolis	IN	Marion	CIPP - IN	Midwest	Chris Vogt	12/24	$ 770,167.10	100%
23123.36	Indianapolis, IN - 49RR05091; FY25 Westfield Sewer Rehabilit	Citizens Energy Group	Indianapolis	IN	Marion	CIPP - IN	Midwest	Chris Vogt	1/25	$ 806,733.89	94%
23123.42	Indianapolis, IN - 7587WW & 92RR07475, 2026 Countywide	Citizens Energy Group	Indianapolis	IN	Marion	CIPP - IN	Midwest	Chris Vogt	3/25	$ 753,540.21	2%
23123.48	Indianapolis, IN - 92EM07276, 1828 N Meridian St. EM	Citizens Energy Group	Indianapolis	IN	Marion	CIPP - IN	Midwest	Chris Vogt	4/25	$ 672,716.88	100%
23123.50	Indianapolis, IN - 92PI06846, Blue Line Rehab Phase 2	Citizens Energy Group	Indianapolis	IN	Marion	CIPP - IN	Midwest	Chris Vogt	4/25	$ 4,500,000.00	112%
23123.51	Indianapolis, IN - 49PI07334, Union St Improvements	Citizens Energy Group	Indianapolis	IN	Marion	CIPP - IN	Midwest	Chris Vogt	9/25	$ 84,229.91	100%
23123.52	Indianapolis, IN - 92EM07429, 310 N East St EM Repair	Citizens Energy Group	Indianapolis	IN	Marion	CIPP - IN	Midwest	Chris Vogt	9/25	$ 105,723.24	55%
23123.53	Indianapolis, IN - 92EM07466, 3090 Gateway EM Repair	Citizens Energy Group	Indianapolis	IN	Marion	CIPP - IN	Midwest	Chris Vogt	9/25	$ 47,811.13	100%
23123.54	Indianapolis, IN - 92PI06846, Blue Line Rehab FY2026	Citizens Energy Group	Indianapolis	IN	Marion	CIPP - IN	Midwest	Chris Vogt	11/25	$ 239,493.50	78%
23123.55	Indianapolis, IN - 92EM07476, Pearl St EM Sewer Repair	Citizens Energy Group	Indianapolis	IN	Marion	CIPP - IN	Midwest	Chris Vogt	11/25	$ 155,222.98	100%
23132.	Ann Arbor, MI - 2023 Sewer Lining Project	City of Ann Arbor	Ann Arbor	MI	Washtenaw	CIPP - MI	Midwest	Dawn Young	12/23	$ 2,989,659.75	104%
23132.01	Ann Arbor, MI - 2023 Sewer Lining Extension 1	City of Ann Arbor	Ann Arbor	MI	Washtenaw	CIPP - MI	Midwest	Dawn Young	6/25	$ 4,287,756.19	46%
23148.	Omaha, NE - Hawkins, 48th St-Harrison St to Q St, OPW 52875	City of Omaha	Omaha	NE	Douglas	CIPP - NE	Midwest	Zachary Ericson	1/24	$ 248,617.00	1%
24001.	Santa Rosa, CA - C02403, Llano Trunk Rehab Phase 1	City of Santa Rosa	Santa Rosa	CA	Sonoma	CIPP - CA	Pacific	Ryan McGraw	1/24	$ 17,114,499.47	89%
24004.	Nashville, TN - 99216-C.51.01, 6492821, Wallace Lane Rehab	The Metro Gov of Nashville & Davidson County	Nashville	TN	Davidson	CIPP - TN	Southeast	Samuel Dickson	1/24	$ 7,785,700.00	60%
24005.	St. Louis, MO - USACE, W912P924C0005, Combined Sewer Overflo	US Army Corps of Engineers	Wellston, Hillsdale, S	MO	St. Louis	CIPP - MO	Midwest	Travis Jerrels	1/24	$ 8,142,238.00	78%

24005.01	St. Louis, MO - USACE, W912P924C0005, CIPP	US Army Corps of Engineers	Wellston, Hillsdale, S	MO	St. Louis	CIPP - MO	Midwest	Travis Jerrels	5/24	$ -	0%
24005.02	St. Louis, MO - USACE, W912P924C0005, Laterals	US Army Corps of Engineers	Wellston, Hillsdale, S	MO	St. Louis	CIPP - MO	Midwest	Travis Jerrels	5/24	$ -	0%
24010.	Putnamville, IN - 67012000-19-019-C1, CF Tunnel Repair	Dept of Admin, Public Works Division	Putnamville	IN	Putnam	GEOKRETE - IN	Midwest	Chris Vogt	2/24	$ 6,072,090.00	102%
24017.	Jefferson City, MO - 31197, 2023 Line Sanitary & Storm Pipes	City of Jefferson	Jeferrson City	MO	Cole	CIPP - MO	Midwest	Nick Pryor	2/24	$ 2,458,129.25	100%
24022.	San Antonio, TX - 2021 CMOM 2A, CO-00684-01, Job 23-4513	San Antonio Water System	San Antonio	TX	Bexar	CIPP - TX	Pacific	Amir Alzer	2/24	$ 3,625,561.09	100%
24023.	Hampton Township, MI - Gravity Sewer Lining, USDA WW System	Charter Township of Hampton	Essexville	MI	Bay	CIPP - MI	Midwest	Dawn Young	2/24	$ 4,136,799.20	82%
24025.01	O'Fallon, MO - 24-022, Sewer Tap Lining, 2025	City of O'Fallon	O'Fallon	MO	St. Charles	CIPP - MO	Midwest	Travis Jerrels	9/25	$ 35,000.00	0%
24026.	St. Louis, MO - MSD, Stormwater IR 2024, 53089, 13129-015.1	Metropolitan St. Louis Sewer District	St. Louis	MO	St. Louis & Unincc	CIPP - MO	Midwest	Travis Jerrels	3/24	$ 1,966,425.00	68%
24026.01	St. Louis, MO - MSD, Stormwater IR, 13129 - CITY	Metropolitan St. Louis Sewer District	St. Louis	MO	City	CIPP - MO	Midwest	Travis Jerrels	7/24	$ -	0%
24031.	Chandler, AZ - B&F, WW2302.251, Price Rd 66" Sewer	City of Chandler	Chandler	AZ	Maricopa	CIPP - AZ	Pacific	Leo Calvario	3/24	$ 7,879,200.00	102%
24042.	Elkhart, IN - HRP Const, 1636, Benham Ave Force Main & Lift	City of Elkhart	Elkhart	IN	Elkhart	CIPP - IN	Midwest	Chris Vogt	3/24	$ 449,966.00	0%
24050.	Kansas City, MO - Kissick, 24-008 Birmingham Area 3	City of Kansas City	Kansas City	MO	Clay	CIPP - MO	Midwest	Nick Jacobs	4/24	$ 483,910.00	124%
24051.	Edina, MN - Bituminous Roadways, Concord B & C	City of Edina	Ediina	MN	Hennepin	CIPP - MN	Midwest	Nick Jacobs	4/24	$ 631,872.00	99%
24053.	St. Louis, MO - MSD, IR 2024 B, 53085, 13021-015.1	Metropolitan St. Louis Sewer District	St. Louis	MO	St. Louis & Unincc	CIPP - MO	Midwest	Travis Jerrels	4/24	$ 3,559,575.00	60%
24053.01	St. Louis, MO - MSD, IR 2024 B, 13021-015.1 CITY	Metropolitan St. Louis Sewer District	St. Louis	MO	City	CIPP - MO	Midwest	Travis Jerrels	9/24	$ -	0%
24057.	San Francisco, CA - NTK Const, East SOMA Sewer, WW-738	San Francisco Public Utilities Commission	San Francisco	CA	San Francisco	CIPP - CA	Pacific	Ryan McGraw	4/24	$ 3,744,066.00	102%
24058.	Burton, MI - SRF WW Improvements, Segment 4, #5786-01	City of Burton	Burton	MI	Genesee	CIPP - MI	Midwest	Derrick Witz	4/24	$ 2,509,259.80	88%
24059.	Lincoln Park, MI - 73158, 2024 SS CIPP Program	City of Lincoln Park	Lincoln Park	MI	Wayne	CIPP - MI	Midwest	Derrick Witz	4/24	$ 2,259,987.00	62%
24060.	Cobb County, GA - S3045, N Marietta Pkwy Interceptor	Cobb County	Marietta	GA	Cobb	CIPP - GA	Southeast	Dan Graham	4/24	$ 1,497,470.00	80%
24064.	Caltrans, CA - DeSilva Gates;03-3H6104;DIR511325; DGC924101	State of CA Dept of Transportation	Colfax	CA	Placer	CIPP - CA	Pacific	Todd Chalk	5/24	$ 487,789.00	0%
24065.	Phoenix, AZ - JOC228, 160483, Large Dia Sanitary Sewer Rehab	City of Phoenix	Phoenix	AZ	Maricopa	CIPP - AZ	Pacific	Victor Villalobos	5/24	$ -	0%
24065.01	Phoenix, AZ - 4108JOC228, 160483, JOA 001	City of Phoenix	Phoenix	AZ	Maricopa	CIPP - AZ	Pacific	Victor Villalobos	5/25	$ 3,667,723.64	0%
24067.	Tonka Bay, MN - Geislinger & Sons, 252-24, 2024 Street & Uti	City of Tonka Bay	Tonka Bay	MN	Hennepin	CIPP - MN	Midwest	Nick Jacobs	4/24	$ 433,550.00	92%
24071.	Mauldin, SC - Atlantic Coast Cont, 2024.03, Basin RG2 SS Reh	City of Mauldin	Mauldin	SC	Greenville	CIPP - SC	Southeast	Taylor Savoie	5/24	$ 661,900.00	216%
24077.	Brooklyn Center, MN - Ryan Contr., 1151, Orchard Lane E Side	City of Brooklyn Center	Brooklyn Center	MN	Hennepin	CIPP - MN	Midwest	Nick Jacobs	6/24	$ 971,688.00	94%
24079.	Philadelphia, PA - 24-0328, Lining of SS in Cobbs Creek	City of Philadelphia	Philadelphia	PA	Philadelphia	CIPP - PA	Atlantic	Ken Sprau	6/24	$ 8,750,500.00	0%
24083.	Hamilton County, TN - 21-345, Signal Mountain Phase 1	Hamilton County, TN	Chattanooga	TN	Hamilton	CIPP - TN	Southeast	Samuel Dickson	6/24	$ 11,215,891.78	65%
24086.	WSSC, MD - Ross Contracting, 16792 On-Call	Washington Suburban Sanitary Commission	Bethesda	MD	Prince George's &	CIPP - MD	Atlantic	Zach Adcock	7/24	$ -	0%
24088.	Salem, OR - 245042, Ultraviolet Light CIPP, Release 1	City of Salem	Salem	OR	Marion	CIPP - OR	Pacific	Nathaniel Rodriguez	7/24	$ 88,904.22	100%
24088.01	Salem, OR - 245042, Ultraviolet Light CIPP, Release 2	City of Salem	Salem	OR	Marion	CIPP - OR	Pacific	Nathaniel Rodriguez	6/25	$ 116,796.12	100%
24089.	Jefferson County, AL - 2023 AMP06, Village Roebuck	Jefferson County	Birmingham	AL	Jefferson	CIPP - AL	Southeast	Dan Graham	7/24	$ 2,056,946.00	88%
24090.	Livonia, MI - Sewer System Maintenance MASTER	City of Livonia	Livonia	MI	Wayne	CIPP - MI	Midwest	Dawn Young	7/24	$ -	0%
24090.02	Livonia, MI - Sewer System Mntc - TO 02	City of Livonia	Livonia	MI	Wayne	CIPP - MI	Midwest	Dawn Young	10/24	$ 610,128.00	33%
24090.03	Livonia, MI - Sewer System Mntc - TO 03, Stark Rd	City of Livonia	Livonia	MI	Wayne	CIPP - MI	Midwest	Dawn Young	3/25	$ 755,185.00	98%
24093.	Detroit, MI - LGC Global, CON2302652, Emergency R&R II	Great Lakes Water Authority (GLWA)	Detroit	MI	Wayne	CIPP - MI	Midwest	Dawn Young	7/24	$ 2,755,940.00	0%
24094.	Charleston, SC - WASTE, 2021000361	Charleston Water System	Charleston	SC	Charleston	Tunneling - SC	Tunneling	Kenneth Knollmeyer	7/24	############	35%
24094.01	Charleston, SC - Non-Billable	Charleston Water System	Charleston	SC	Charleston	Tunneling - SC	Tunneling	Kenneth Knollmeyer	7/24	$ -	0%
24095.01	Salem, OR - 245041, Project 723110, S Salem High School	City of Salem	Salem	OR	Marion	CIPP - OR	Pacific	Nathaniel Rodriguez	6/25	$ 172,173.11	63%
24097.	Garden City, MI - 2024-2027 As Needed MASTER	City of Garden City	Garden City	MI	Wayne	CIPP - MI	Midwest	Joshua Parker	7/24	$ -	0%
24097.01	Garden City, MI - 2024-2027 As Needed Sewer Lining, WO 1	City of Garden City	Garden City	MI	Wayne	CIPP - MI	Midwest	Joshua Parker	10/24	$ 105,456.00	118%
24103.	King County, WA - Scarsella Bros, KC001183, Runway Rehab	King County, Airport Division	Seattle	WA	King	CIPP - WA	Pacific	Nathaniel Rodriguez	7/24	$ 1,062,860.00	69%
24104.	Los Angeles County, CA - Charles King, CA Ave, CKC272024	Los Angeles County Sanitation Districts		CA	Los Angeles	CIPP - CA	Pacific	Leo Calvario	7/24	$ 3,018,503.43	99%
24110.	Cary, NC - SW3502, FY22 Sewer Rehab Project	Town of Cary	Cary	NC	Wake	CIPP - NC	Southeast	Chris Hee	8/24	$ 8,518,151.79	72%
24111.	North Little Rock, AR - ANRC 01068-CWSRF-L; Lower Riverside	North Little Rock Wastewater Treatment	North Little Rock	AR	Pulaski	CIPP - AR	Southeast	Regan Roy	8/24	$ 9,977,770.00	74%
24116.	Caltrans, CA - Robert J Frank, 03-2G9304, El Dorado	State of CA Dept of Transportation	Greenwood	CA	El Dorado	CIPP - CA	Pacific	Todd Chalk	8/24	$ 71,967.00	84%
24118.	Largo, FL - 24-B-806, Trenchless Sanitary MASTER	City of Largo	Largo	FL	Pinellas	CIPP - FL	Southeast	Chris Hee	8/24	$ -	0%
24118.07	Largo, FL - 24-B-806, Stormwater CIPP, FY 25, Group #2	City of Largo	Largo	FL	Pinellas	CIPP - FL	Southeast	Chris Hee	6/25	$ 719,153.24	103%
24118.08	Largo, FL - 24-B-806, 4th Ave NW Lateral Lining	City of Largo	Largo	FL	Pinellas	CIPP - FL	Southeast	Chris Hee	6/25	$ 105,600.59	39%
24118.09	Largo, FL - 24-B-806, Lift Station 3 Lateral Lining	City of Largo	Largo	FL	Pinellas	CIPP - FL	Southeast	Chris Hee	8/25	$ 126,690.00	0%
24119.	Allen Park, MI - Sewer Lining Program MASTER	City of Allen Park	Allen Park	MI	Wayne	CIPP - MI	Midwest	Joshua Parker	8/24	$ -	0%
24119.02	Allen Park, MI - Sewer Lining Program, WO 2	City of Allen Park	Allen Park	MI	Wayne	CIPP - MI	Midwest	Joshua Parker	8/25	$ 85,515.00	204%
24123.	Pittsfield, MI - Sewer Lining Program MASTER	Pittsfield Charter Township	Pittsfield	MI	Washtenaw	CIPP - MI	Midwest	Dawn Young	8/24	$ -	0%
24123.02	Pittsfield, MI - Sewer Lining Program, WO 2	Pittsfield Charter Township	Pittsfield	MI	Washtenaw	CIPP - MI	Midwest	Dawn Young	8/25	$ 794,820.00	10%
24124.	Ann Arbor Charter Township, MI - Sewer Lining MASTER	Charter Township of Ann Arbor, MI	Ann Arbor	MI	Washtenaw	CIPP - MI	Midwest	Dawn Young	8/24	$ -	0%
24125.	Greenville, SC - FM850-80 Basin Find & Fix CIPP	Metropolitan Sewer Subdistrict	Greenville	SC	Greenville	CIPP - SC	Southeast	Taylor Savoie	8/24	$ 3,272,611.86	98%
24127.	Tuolumne County, CA - 1749, Twain Harte Storm Drain Rehab	County of Tuolumne	Sonora	CA	Tuolumne	CIPP - CA	Pacific	Ben Summersett	9/24	$ 1,877,967.28	66%
24128.	Shawnee, KS - Abay Const., 75th & Switzer	City of Shawnee	Shawnee	KS	Johnson	CIPP - KS	Midwest	Nick Jacobs	9/24	$ 93,215.00	100%
24129.	Oakland County, MI - EFSDDD, Southfield Sewer Lining Rehab	Oakland County Water Resources Commissioner	Southfield	MI	Oakland	CIPP - MI	Midwest	Dawn Young	9/24	$ 7,488,804.75	85%
24132.	Westland, MI - Sanitary Sewer Maintenance Services MASTER	City of Westland	Westland	MI	Wayne	CIPP - MI	Midwest	Joshua Parker	9/24	$ -	0%
24132.03	Westland, MI - Sanitary Sewer Mntc, WO 3	City of Westland	Westland	MI	Wayne	CIPP - MI	Midwest	Joshua Parker	8/25	$ 3,721,427.00	28%
24133.	Fort Meade, MD - Sewer & MH Assessment, Trunk Line D	American Water Military Services Group	Fort Meade	MD	Anne Arundel	CIPP - MD	Atlantic	Ken Sprau	9/24	$ 416,942.13	35%
24134.	Fort Meade, MD - CIPP 2024 Sewer Main Lining - TO 2	American Water Military Services Group	Fort Meade	MD	Anne Arundel	CIPP - MD	Atlantic	Ken Sprau	9/24	$ 464,247.00	100%
24137.	Ann Arbor, MI - 2024 On-Call Sewer System MASTER	City of Ann Arbor	Ann Arbor	MI	Washtenaw	CIPP - MI	Midwest	Dawn Young	9/24	$ -	0%

24137.01	Ann Arbor, MI - 2024 On-Call, WO 1, Miller & 1st	City of Ann Arbor	Ann Arbor	MI	Washtenaw	CIPP - MI	Midwest	Dawn Young	10/24	$ 939,320.00	99%
24138.	Topeka, KS - Bettis Asphalt, 24BA669, Summerfield	City of Topeka	Topeka	KS	Shawnee	CIPP - KS	Midwest	Zachary Ericson	9/24	$ 646,252.00	99%
24139.	Oakland County, MI - Pontiac Sewage Disposal System #4	Oakland County Water Resources Commissioner	Pontiac	MI	Oakland	CIPP - MI	Midwest	Dawn Young	9/24	$ 4,474,085.00	80%
24142.	North Augusta, SC - WW Interceptor Pipeline & MH Rehab	City of North Augusta	North Augusta	SC	Aiken & Edgefield	CIPP - SC	Southeast	Dan Graham	9/24	$ 4,986,924.34	87%
24144.	Grand Blanc, MI - 2024 Sanitary Sewer Svcs MASTER	Charter Township of Grand Blanc	Grand Blanc	MI	Genesee	CIPP - MI	Midwest	Dawn Young	9/24	$ -	0%
24144.01	Grand Blanc, MI - 2024 Sanitary Sewer, WO 1	Charter Township of Grand Blanc	Grand Blanc	MI	Genesee	CIPP - MI	Midwest	Dawn Young	10/24	$ 221,051.00	100%
24147.	Berkley, MI - Sewer Lining Program MASTER	City of Berkley	Berkley	MI	Oakland	CIPP - MI	Midwest	Derrick Witz	9/24	$ -	0%
24149.	Wyandotte County, KS - 6301, On-Call Sanitary & Storm Sewer	Unified Gov Wyandotte County	Kansas City	KS	Wyandotte	CIPP - KS	Midwest	Nick Jacobs	9/24	$ -	0%
24152.	Genesee County, MI - 2024-2028 CIPP Services MASTER	Genesee County	Flint	MI	Genesee	CIPP - MI	Midwest	Dawn Young	9/24	$ -	0%
24152.01	Genesee County, MI - 2024-2028 CIPP Svcs, WO 1	Genesee County	Flint	MI	Genesee	CIPP - MI	Midwest	Dawn Young	10/24	$ 161,341.00	108%
24152.02	Genesee County, MI - 2024-2028 CIPP Svcs, WO 2	Genesee County	Flint	MI	Genesee	CIPP - MI	Midwest	Dawn Young	7/25	$ 325,391.00	36%
24156.03	Alton, IL - Plocher, ILAW Central Alton Lining, 4082-002.3	Illinois American Water (ILAW)	Alton	IL	Madison	CIPP - IL	Midwest	Travis Jerrels	10/24	$ 749,088.00	107%
24158.	Canton, MI - Sewer Lining Program As Needed MASTER	Charter Township of Canton, MI	Canton	MI	Wayne	CIPP - MI	Midwest	Joshua Parker	10/24	$ -	0%
24161.	Thomasville, GA - 2024 Wastewater Improvements	City of Thomasville, GA	Thomasville	GA	Thomas	CIPP - GA	Southeast	Dan Graham	10/24	$ 782,258.50	72%
24162.	Blue Springs, MO - Annual CIPP Lining MASTER	City of Blue Springs	Blue Springs	MO	Jackson	CIPP - MO	Midwest	Zachary Ericson	10/24	$ -	0%
24162.03	Blue Springs, MO - Annual CIPP Lining, Auth 2, Sanitary	City of Blue Springs	Blue Springs	MO	Jackson	CIPP - MO	Midwest	Zachary Ericson	12/25	$ -	0%
24162.04	Blue Springs, MO - Annual CIPP Lining, Auth 2, Storm	City of Blue Springs	Blue Springs	MO	Jackson	CIPP - MO	Midwest	Zachary Ericson	12/25	$ -	0%
24167.	Casselberry, FL - PBA-2025-1257 Rehab Sewers MASTER	City of Casselberry	Casselberry	FL	Seminole	CIPP - FL	Southeast	Chris Hee	10/24	$ -	0%
24169.	Gainesville, FL - 2024-083-E, Sanitary Sewer MASTER	Gainesville Regional Utilities	Gainesville	FL	Alachua	CIPP - FL	Southeast	Chris Hee	10/24	$ -	0%
24169.01	Gainesville, FL - 2024-083-E, Project O	Gainesville Regional Utilities	Gainesville	FL	Alachua	CIPP - FL	Southeast	Chris Hee	2/25	$ 592,372.46	87%
24169.03	Gainesville, FL - 2024-083-E, WO 3	Gainesville Regional Utilities	Gainesville	FL	Alachua	CIPP - FL	Southeast	Chris Hee	10/25	$ 685,785.98	10%
24170.	Caltrans, CA - Ranger, DIR , 04-0Q8204, Const Drainage	California Dept of Transportation	Napa	CA	Napa	CIPP - CA	Pacific	Todd Chalk	10/24	$ 471,640.00	98%
24171.	Greenwood, MO - Basin 2 Sanitary Sewer, 2024-3	City of Greenwood	Greenwood	MO	Jackson	CIPP - MO	Midwest	Nick Jacobs	11/24	$ 1,093,839.00	92%
24172.	Romulus, MI - Sewer Lining Program MASTER	City of Romulus	Romulus	MI	Wayne	CIPP - MI	Midwest	Joshua Parker	11/24	$ -	0%
24172.02	Romulus, MI - Sewer Lining Program, WO 2	City of Romulus	Romulus	MI	Wayne	CIPP - MI	Midwest	Joshua Parker	8/25	$ 333,663.00	42%
24173.	Okaloosa County, FL - ITB WS 79-24 - MASTER	Okaloosa Board of County Commissioners	Crestview	FL	Okaloosa	CIPP - FL	Southeast	Chris Hee	11/24	$ -	0%
24173.02	Okaloosa County, FL - C25-4080-WS, TO 2, Poquito Bayou, 2026	Okaloosa Board of County Commissioners	Crestview	FL	Okaloosa	CIPP - FL	Southeast	Chris Hee	11/25	$ 500,000.00	0%
24174.	Anne Arundel County, MD - AACPS, 25-155 Trenchless Technolog	Anne Arundel County Public Schools	Annapolis	MD	Anne Arundel	CIPP - MD	Atlantic	Zach Adcock	11/24	$ -	0%
24174.01	Anne Arundel County, MD - AACPS, 25-155, Chesapeake Bay MS	Anne Arundel County Public Schools	Annapolis	MD	Anne Arundel	CIPP - MD	Atlantic	Zach Adcock	6/25	$ 26,800.54	100%
24174.05	Anne Arundel County, MD - AACPS, 25-155, Annapolis HS	Anne Arundel County Public Schools	Annapolis	MD	Anne Arundel	CIPP - MD	Atlantic	Zach Adcock	6/25	$ 41,882.34	100%
24174.06	Anne Arundel County, MD - AACPS, 25-155, Oakwood ES	Anne Arundel County Public Schools	Annapolis	MD	Anne Arundel	CIPP - MD	Atlantic	Zach Adcock	6/25	$ 30,056.00	100%
24176.	Oakland County, MI - HRSDS Novi Trunk Extension 1	Oakland County Water Resources Commissioner	Novi	MI	Oakland	CIPP - MI	Midwest	Joshua Parker	11/24	$ 13,985,144.20	45%
24179.	San Francisco, CA - R&S Const PW Various No 62, 1000034265	San Francisco Dept Public Works	San Francisco	CA	San Francisco	CIPP - CA	Pacific	Ben Summersett	11/24	$ 1,669,942.00	96%
24181.	Advance, MO - I & I Repairs	City of Advance	Advance	MO	Stoddard	CIPP - MO	Midwest	Nick Pryor	11/24	$ 717,249.60	99%
24183.	St. Charles County, MO - 24-167, 2025 Storm Sewer Lining	St. Charles County	St. Charles	MO	St. Charles	CIPP - MO	Midwest	Travis Jerrels	11/24	$ 5,681,431.80	100%
24184.	San Antonio, TX - 2021 CMOM 3A, CO-00766-01, Job 22-4511	San Antonio Water System	San Antoniio	TX	Bexar	CIPP - TX	Pacific	Roger Terrazas	11/24	$ 4,103,595.54	100%
24186.	Phoenix, AZ - Klass Svcs, Camelot 8" CIPP	City of Phoenix	Phoenix	AZ	Maricopa	CIPP - AZ	Pacific	Victor Villalobos	12/24	$ 78,670.00	0%
24187.	Deltona, FL - Sanitary Sewer Lining, MH Rehab--MASTER	City of Deltona	Deltona	FL	Volusia	CIPP - FL	Southeast	Chris Hee	12/24	$ -	0%
24191.	San Francisco, CA - Cratus, WW-743, Geary Blvd Sewer	San Francisco Public Utilities Commission	San Francisco	CA	San Francisco	CIPP - CA	Pacific	Ben Summersett	12/24	$ 2,710,770.00	0%
24194.	San Francisco, CA - Ronan, 8th St, Clay St & Leavenworth St	San Francisco Dept of Public Works	San Francisco	CA	San Francisco	CIPP - CA	Pacific	Ben Summersett	12/24	$ 1,163,060.00	3%
24195.	Los Angeles County, CA - Charles King 412024 Jt Outfall 8C&D	Los Angeles County Sanitation Districts	Los Angeles	CA	Los Angeles	CIPP - CA	Pacific	Leo Calvario	12/24	$ 2,359,071.00	55%
24197.	New Haven, MI - NGI Phase 5, WWS-2024-002	North Gratiot Interceptor Drain Drainage District	New Haven	MI	Macomb	CIPP - MI	Midwest	Dawn Young	12/24	$ 1,163,393.50	99%
24199.	Minneapolis, MN - Met Council, 1-MN-346, 24P195, 809214	Metropolitan Council	Minneapolis	MN	Hennepin	CIPP - MN	Midwest	Nick Jacobs	12/24	$ 3,897,892.31	46%
24200.	North Little Rock, AR - ANRC 01068-CWSRF-L; Dark Hollow	North Little Rock WW Treatment	North Little Rock	AR	Pulaski	CIPP - AR	Southeast	Regan Roy	12/24	$ 5,283,017.08	100%
24201.	North Little Rock, AR - ANRC 01068-CWSRF-L; 5 Mile Creek	North Little Rock WW Treatment	North Little Rock	AR	Pulaski	CIPP - AR	Southeast	Regan Roy	12/24	$ 3,770,853.00	100%
24205.	Bend, OR - K&E Excavating, ODOT, US20, Central OR Hwy	ODOT Region 4	Bend	OR	Deschutes	CIPP - OR	Pacific	Nathaniel Rodriguez	1/25	$ 324,312.64	74%
25002.	Lee's Summit, MO - Kissick, 24-095-01, I&I Lining	City of Lee's Summit	Lee's Summit	MO	Jackson	CIPP - MO	Midwest	Zachary Ericson	1/25	$ 358,220.00	79%
25005.	Modesto, CA - DIR20250581607; 2025-13, Grimes, Mercy & WL	City of Modesto	Modesto	CA	Stanislaus	CIPP - CA	Pacific	Ryan McGraw	1/25	$ 23,428,661.19	44%
25006.	Kansas City, KS - Amino Bros., Wyandotte High/Lombardy Dr.	Unified Gov of Wyandotte County	Kansas City	KS	Wyandotte	GEOKRETE - KS	Midwest	Nick Jacobs	2/25	$ 436,175.95	100%
25007.	Kissimmee, FL - Town & Country Sewer Rehab, IFB-25-006	Tohopekaliga Water Authority	Kissimmee	FL	Osceola	CIPP - FL	Southeast	Taylor Savoie	2/25	$ 2,397,807.50	89%
25008.	Tuscaloosa, AL - Garner Rd Gravity Sewer, PCA-24-1533	City of Tuscaloosa	Tuscaloosa	AL	Tuscaloosa	CIPP - AL	Southeast	Dan Graham	2/25	$ 3,370,859.00	64%
25009.	Indianapolis, IN - GHD Lining, Project 12584838	GHD	Indianapolis	IN	Marion	CIPP - IN	Midwest	Chris Vogt	2/25	$ 294,495.00	75%
25010.	Raytown, MO - Kissick, 2408601, Wildwood Area I&I	City of Raytown	Raytown	MO	Jackson	CIPP - MO	Midwest	Zachary Ericson	2/25	$ 239,550.00	119%
25011.	Raytown, MO - Kissick, 2408701, 87th Street Basin	City of Raytown	Raytown	MO	Jackson	CIPP - MO	Midwest	Zachary Ericson	2/25	$ 141,995.00	112%
25015.	Lantana, FL - Trenchless Sanitary & Storm Sewer Rehab	Town of Lantana	Lantana	FL	Palm Beach	CIPP - FL	Southeast	Chris Hee	2/25	$ 249,990.00	36%
25016.	Stockton, CA - UW18028, Worth St. Sanitary Sewer	City of Stockton	Stockton	CA	San Joaquin	CIPP - CA	Pacific	Ben Summersett	2/25	$ 5,264,679.44	58%
25017.	Las Vegas, NV - LV Paving, 16071, Lot 2 Group K-Arville St.	City of Las Vegas	Las Vegas	NV	Clark	CIPP - NV	Pacific	Leo Calvario	2/25	$ 979,680.00	0%
25019.	Shawnee, KS - Wiedenmann, 868, W 49th Terrace & Roundtree	City of Shawnee	Shawnee	KS	Johnson	CIPP - KS	Midwest	Zachary Ericson	2/25	$ 597,069.00	104%
25020.	St. Louis, MO - MSD, Stormwater IR 2025, 53171, 13130-015.1	Metropolitan St. Louis Sewer District	County	MO	STL & Unincorpor	CIPP - MO	Midwest	Travis Jerrels	2/25	$ 2,049,680.00	39%
25021.	Emeryville, CA - DIR20250568299; N Interceptor, SD-454	East Bay Municipal Utility District (EBMUD)	Emeryville	CA	Alameda	CIPP - CA	Pacific	Leo Calvario	2/25	$ 9,810,000.00	82%
25022.	San Francisco, CA - McGuire&Hester, 5158, Buchanan St. Mall	San Francisco Dept of Public Works	San Francisco	CA	San Francisco	CIPP - CA	Pacific	Ben Summersett	3/25	$ 1,188,890.00	101%
25023.	Hallsville, MO - Stockman, MOAW, 2025 CIPP	Missouri American Water	Hallsville	MO	Boone	CIPP - MO	Midwest	Nick Pryor	3/25	$ 170,150.00	89%
25024.	Independence, MO - SheDigsIt, Rock Creek, Geopolymer	City of Independence	Independence	MO	Jackson	GEOKRETE - MO	Midwest	Zachary Ericson	3/25	$ 796,980.00	40%

25025.	Independence, MO - SheDigsIt, Rock Creek, CIPP	City of Independence	Independence	MO	Jackson	CIPP - MO	Midwest	Zachary Ericson	3/25	$ 783,141.00	93%
25026.	Bellevue, NE - Olde Towne CIPP Rehab, Phase 1	City of Bellevue	Bellevue	NE	Sarpy	CIPP - NE	Midwest	Nick Jacobs	3/25	$ 822,795.50	109%
25026.01	Bellevue, NE - CO 1- Olde Towne CIPP Rehab, Phase 1	City of Bellevue	Bellevue	NE	Sarpy	CIPP - NE	Midwest	Nick Jacobs	8/25	$ 906,143.00	72%
25027.	St. Louis, MO - Millstone Weber, 202410-07, 20095, Taxilane	City of St. Louis	St. Louis	MO	St. Louis	CIPP - MO	Midwest	Travis Jerrels	3/25	$ 1,136,564.00	101%
25028.	Caltrans, CA - Teichert, 06-0X0604; 12257.0043; Culvert Repa	State of CA Dept of Transportation	Coalinga	CA	Fresno	CIPP - CA	Pacific	Ben Summersett	3/25	$ 739,407.20	0%
25038.	Saline, MI - Sewer System Maintenance MASTER	City of Saline	Saline	MI	Washtenaw	CIPP - MI	Midwest	Dawn Young	4/25	$ -	0%
25038.02	Saline, MI - Sewer System, Auth 2, Michigan Ave	City of Saline	Saline	MI	Washtenaw	CIPP - MI	Midwest	Dawn Young	10/25	$ 61,420.00	121%
25040.	Taos, MO - Stockman, MOAW, 2025 CIPP No. 2, Dove Ln	Missouri American Water	Taos	MO	Cole	CIPP - MO	Midwest	Nick Pryor	4/25	$ 165,601.00	77%
25041.	Jefferson City, MO - Stockman, MOAW, 2025 CIPP 2, Greenbrier	Missouri American Water	Jefferson City	MO	Cole	CIPP - MO	Midwest	Nick Pryor	4/25	$ 37,650.00	121%
25042.	California, MO - Stockman, MOAW, 2025 CIPP2, Hickory Hil	Missouri American Water	California	MO	Cole	CIPP - MO	Midwest	Nick Pryor	4/25	$ 34,510.00	7%
25045.	Kansas City, MO - 81001032/EV3788, City Wide FY 2026	City of Kansas City	Kansas City	MO	Various	CIPP - MO	Midwest	Zachary Ericson	4/25	$ 8,500,000.00	52%
25047.	San Lorenzo, CA - DIR#20250578585, 78" Influent RCP, Oro Lom	Oro Loma Sanitary District	San Lorenzo	CA	Alameda	CIPP - CA	Pacific	Ben Summersett	4/25	$ 2,903,117.63	70%
25050.	Franklin, TN - Harpeth Wastewater 2025 Sewer Rehab	Harpeth Wastewater Cooperative	Franklin	TN	Williamson	CIPP - TN	Southeast	Regan Roy	4/25	$ 530,304.50	66%
25051.	Seattle, WA - PW2022-038 Sewer Lining Contract 21-2	City of Seattle	Seattle	WA	King	CIPP - WA	Pacific	Nathaniel Rodriguez	4/25	$ 4,683,036.29	33%
25053.	Shawnee, KS - 2025-042, Mill Valley HS & Monticello Dr.	City of Shawnee	Shawnee	KS	Johnson	GEOKRETE - KS	Midwest	Chris Vogt	5/25	$ 982,854.34	100%
25054.	Nashville, TN - 99216-C.46.01, River Drive Rehab	The Metro Gov of Nashville & Davidson County	Nashville	TN	Davidson	CIPP - TN	Southeast	Austin Preiss	5/25	$ 7,732,140.00	32%
25055.	Calhoun, MO - Kim Const, 525001, DNR-ww-5d67e44b4209	City of Calhoun	Calhoun	MO	Henry	CIPP - MO	Midwest	Nick Jacobs	5/25	$ 66,700.00	102%
25056.	St. Paul, MN - ECI, 2505, 1-MH-401 Siphon Rehab	Metropolitan Council Environmental Services	St. Paul & Lilydale	MN	Ramsey & Dakota	CIPP - MN	Midwest	Nick Pryor	5/25	$ 974,812.00	100%
25057.	Norwood Young America, MN - WM Mueller, 2025 Street Improvem	City of Norwood Young America	Norwood Young Ame	MN	Carver	CIPP - MN	Midwest	Nick Jacobs	5/25	$ 262,720.00	97%
25059.	Platte County, MO - Sanitary Sewer Repairs - 2025	Platte County Regional Sewer District	Parkville	MO	Platte	CIPP - MO	Midwest	Nick Jacobs	5/25	$ 209,352.00	85%
25062.	San Antonio, TX - 2021 CMOM 3B, CO-00767, Job 24-4508	San Antonio Water System	San Antonio	TX	Bexar	CIPP - TX	Pacific	Roger Terrazas	5/25	$ 10,444,784.00	7%
25064.	Sauget, IL - Falling Springs Road, CDBG PY 2024 Phase X	The Village of Sauget	Sauget	IL	St. Clair	CIPP - IL	Midwest	Travis Jerrels	5/25	$ 141,625.00	86%
25065.	Maryville, MO - VF Anderson, NWMSU Critical Utility Upgrade	Northwest Missouri State University	Maryville	MO	Nodaway	CIPP - MO	Midwest	Zachary Ericson	5/25	$ 139,565.00	0%
25066.	DeKalb County, GA - ITB 24-101649; 2000271 Consent Decree	DeKalb County	Decatur	GA	DeKalb	CIPP - GA	Southeast	Nakeita Love	5/25	$ 36,239,043.50	0%
25068.	Elkin, NC - Yadkin Valley, 2022 Collection System	Yadkin Valley Sewer Authority	Elkin & Jonesville	NC	Surry & Yadkin	CIPP - NC	Southeast	Taylor Savoie	5/25	$ 848,481.00	0%
25069.	Washington, DC - 250100B, Linear Water & Sewer Rehab CMAR	DC Water & Sewer Authority	Washington	DC	District of Columb	CIPP - DC	Atlantic	Ken Sprau	5/25	$ -	0%
25070.	San Francisco, CA - Mitchell Eng, DIR#20240546762, WW-720	San Francisco Public Utilities Commission	San Francisco	CA	San Francisco	CIPP - CA	Pacific	Ben Summersett	5/25	$ 1,951,200.00	2%
25071.	Kissimmee, FL - IFB-25-016 Shingle Creek Reserve & Bermuda	Tohopekaliga Water Authority	Kissimmee	FL	Osceola	CIPP - FL	Southeast	Taylor Savoie	6/25	$ 1,624,856.00	6%
25072.	Troutman, NC - Contract A Sewer Pipe Rehab, 2022 Sewer Colle	Town of Troutman	Troutman	NC	Iredell	CIPP - NC	Southeast	Taylor Savoie	6/25	$ 916,832.50	0%
25073.	Apopka, FL - Sanitary Sewer Line & Manhole Rehab MASTER	City of Apopka	Apopka	FL	Orange	CIPP - FL	Southeast	Chris Hee	6/25	$ -	0%
25073.01	Apopka, FL - Sanitary Sewer Lining, WO 1	City of Apopka	Apopka	FL	Orange	CIPP - FL	Southeast	Chris Hee	11/25	$ 8,825.00	0%
25075.	Statesville, NC - Country Boy Landscaping, Front & Tradd St.	City of Statesville	Statesville	NC	Iredell	CIPP - NC	Southeast	Taylor Savoie	6/25	$ 99,150.00	97%
25076.	Hallsville, MO - Stockman, MOAW, Ball Field Lining	Missouri American Water	Hallsville	MO	Boone	CIPP - MO	Midwest	Nick Pryor	6/25	$ 109,756.00	105%
25077.	Whitemarsh Twp, PA - COSTARS, 2025 Pipe Rehab, 2025-03	Whitemarsh Township	Whitemarsh Townsh	PA	Montgomery	CIPP - PA	Atlantic	Ken Sprau	6/25	$ 962,000.00	100%
25078.	Barnhart, MO - 813, 30" Sewer Main Rehab, Glaize Creek Publi	Glaize Creek Public Sewer District	Barnhart	MO	Jefferson	CIPP - MO	Midwest	Chris Vogt	6/25	$ 1,582,395.00	14%
25079.	Loxahatchee River District, FL - FY25 Lining, MASTER	Loxahatchee River District	Jupiter	FL	Palm Beach	CIPP - FL	Southeast	Chris Hee	6/25	$ -	0%
25080.	Clay County, FL - 2024/2025-256, CIPP Services MASTER	Clay County Board of County Commissioners	Green Cove Springs	FL	Clay	CIPP - FL	Southeast	Chris Hee	6/25	$ -	0%
25081.	Dubuque, IA - Top Grade Exc, Old Mill Lift Station	City of Dubuque	Dubuque	IA	Dubuque	CIPP - IA	Midwest	Zachary Ericson	6/25	$ 317,833.00	0%
25083.	Washington, DC - Anchor, 24-11-027 Emergency Sewer Main	DC Water & Sewer Authority	Washington	DC	District of Columb	GEOKRETE - DC	Atlantic	Ken Sprau	6/25	$ 164,000.00	98%
25084.	Little Rock, AR - 2025 Small Dia CIPP, R220402	Little Rock Water Reclamation Authority	Little Rock	AR	Pulaski	CIPP - AR	Southeast	Regan Roy	6/25	$ 1,458,405.50	84%
25085.	Merriam, KS - McAnany, 2025 Street & Drainage Improvements	City of Merriam	Merriam	KS	Johnson	CIPP - KS	Midwest	Zachary Ericson	6/25	$ 521,450.00	78%
25087.	Maryville, MO - VF Anderson, NWMS Stormwater Improvements	City of Maryville	Maryville	MO	Nodaway	CIPP - MO	Midwest	Zachary Ericson	6/25	$ 27,971.00	0%
25088.	Wardsville, MO - Stockman, MOAW, Cemetery Lining 2025	Missouri American Water	Wardsville	MO	Cole	CIPP - MO	Midwest	Nick Pryor	6/25	$ 72,188.00	75%
25090.	San Francisco, CA - Ronan, DIR#20250594885; VL 69	San Francisco Dept of Public Works	San Francisco	CA	San Francisco	CIPP - CA	Pacific	Ben Summersett	6/25	$ 257,450.00	0%
25093.	Parkersburg, WV - 2025-12 Stormwater Lining Project	City of Parkersburg	Parkersburg	WV	Wood	CIPP - WV	Atlantic	Zach Adcock	6/25	$ 295,000.00	105%
25094.	San Francisco, CA - Precision, DIR#20250585669, WW-754	San Francisco Public Utilities Commission	San Francisco	CA	San Francisco	CIPP - CA	Pacific	Ben Summersett	7/25	$ 7,795,000.00	0%
25095.	Sanford, FL - 24/25-238, Sanitary Sewer Line MASTER	City of Sanford	Sanford	FL	Seminole	CIPP - FL	Southeast	Chris Hee	7/25	$ -	0%
25095.01	Sanford, FL - 24/25-238, SS Line & MH Rehab, WO 1	City of Sanford	Sanford	FL	Seminole	CIPP - FL	Southeast	Chris Hee	9/25	$ 49,620.00	0%
25096.	Greenville, SC - Atlantic Coast Cont, Dunean Mill Village	Metro Connects	Greenville	SC	Greenville	CIPP - SC	Southeast	Taylor Savoie	7/25	$ 74,720.00	100%
25097.	St. Peters, MO - 25-152 - FY25 CIPP Lining	City of St. Peters	St. Peters	MO	St. Charles	CIPP - MO	Midwest	Travis Jerrels	7/25	$ 1,274,664.40	84%
25097.01	St. Peters, MO - 25-152 - FY25 CIPP, Laterals	City of St. Peters	St. Peters	MO	St. Charles	CIPP - MO	Midwest	Travis Jerrels	9/25	$ -	0%
25098.	Sarasota County, FL - SR2661-02, Sanitary Pipeline MASTER	Sarasota County	Sarasota	FL	Sarasota	CIPP - FL	Southeast	Chris Hee	7/25	$ -	0%
25098.01	Sarasota County, FL - SR2661-02, Work Assignments 1 thru 5	Sarasota County	Sarasota	FL	Sarasota	CIPP - FL	Southeast	Chris Hee	9/25	$ 525,190.33	64%
25099.	Bay City, MI - Sewer System Maintenance MASTER	City of Bay City	Bay City	MI	Bay	CIPP - MI	Midwest	Dawn Young	7/25	$ -	0%
25099.01	Bay City, MI - Sewer System Mntc, WO 1	City of Bay City	Bay City	MI	Bay	CIPP - MI	Midwest	Dawn Young	8/25	$ 984,990.00	0%
25100.	Lake St. Louis, MO - 2025 Sewer Lining Project	Public Water Supply District No. 2	Lake St. Louis	MO	St. Charles	CIPP - MO	Midwest	Travis Jerrels	7/25	$ 977,564.00	7%
25100.01	Lake St. Louis, MO - 2025 Sewer Lining, Laterals	Public Water Supply District No. 2	Lake St. Louis	MO	St. Charles	CIPP - MO	Midwest	Travis Jerrels	9/25	$ -	0%
25101.	Phoenix, AZ - TF Contracting, 25.6075-01, 99th Ave Intercept	City of Phoenix	Phoenix	AZ	Maricopa	CIPP - AZ	Pacific	Victor Villalobos	7/25	$ 712,100.00	0%
25102.	St. Clair, MI - 2025 Sanitary Sewer Rehab	City of St. Clair	St. Clair	MI	St. Clair	CIPP - MI	Midwest	Joshua Parker	7/25	$ 132,660.00	37%
25103.	Northville, MI - 2025 Sewer Rehab - MASTER	Charter Township of Northville	Northville	MI	Wayne & Oakland	CIPP - MI	Midwest	Joshua Parker	7/25	$ -	0%
25103.01	Northville, MI - 2025 Sewer Rehab - WO 1	Charter Township of Northville	Northville	MI	Wayne & Oakland	CIPP - MI	Midwest	Joshua Parker	7/25	$ 345,800.00	98%
25104.	Brazil, IN - B&T Drainage, SF SWIF245711, Colony Acres	City of Brazil	Brazil	IN	Clay	CIPP - IN	Midwest	Chris Vogt	7/25	$ 294,954.00	21%
25106.	Crestview, FL - Manhole Rehab	City of Crestview	Crestview	FL	Okaloosa	CIPP - FL	Southeast	Chris Hee	7/25	$ 39,900.00	0%

25107.	Knoxville, TN - Brabston, S Knox Mini-Basin 40F3, KUB 3755	Knoxville Utilities Board	Knoxville	TN	Knox	CIPP - TN	Southeast	Troy Melton	7/25	$ 711,252.50	97%
25111.	Rogersville, TN - Downtown Sanitary Sewer Rehab	Town of Rogersville	Rogersville	TN	Hawkins	CIPP - TN	Southeast	Troy Melton	8/25	$ 983,460.00	6%
25112.	Godfrey, IL - Kamadulski, ILAW, 2025 CIPP Lining	Illinois American Water Company	Godfrey	IL	Madison	CIPP - IL	Midwest	Travis Jerrels	8/25	$ 913,736.25	0%
25113.	Oakland County, MI - 2025 Sanitary Sewer Rehab	Oakland County Water Resources Commissioner	County	MI	Oakland	CIPP - MI	Midwest	Joshua Parker	8/25	$ 373,545.00	16%
25114.	San Francisco, CA - M O'Shaughnessy, DIR20250585644, WW-727R	San Francisco Public Utilities Commission	San Francisco	CA	San Francisco	CIPP - CA	Pacific	Ben Summersett	8/25	$ 688,758.00	0%
25115.	Topeka, KS - Fit Excavating, Street, Stormwater, Waterline	City of Topeka	Topeka	KS	Shawnee	CIPP - KS	Midwest	Zachary Ericson	8/25	$ 212,233.00	0%
25116.	Appleton City, MO - Dirks, 5306, Appleton City Sewer	City of Appleton City, MO	Appleton City	MO	St. Clair	CIPP - MO	Midwest	Nick Jacobs	8/25	$ 577,849.00	0%
25117.	Margate, FL - Trenchless Technology Rehabilitation	City of Margate	Margate	FL	Broward	CIPP - FL	Southeast	Chris Hee	8/25	$ 254,476.00	79%
25117.01	Margate, FL - Trenchless Technology, PO 260596	City of Margate	Margate	FL	Broward	CIPP - FL	Southeast	Chris Hee	12/25	$ 383,754.20	0%
25118.	Hannibal, MO - CIPP Lining 2025	City of Hannibal	Hannibal	MO	Marion	CIPP - MO	Midwest	Nick Pryor	8/25	$ 789,860.00	0%
25120.	Bloomfield, MO - I & I Repairs	City of Bloomfield	Bloomfield	MO	Stoddard	CIPP - MO	Midwest	Travis Jerrels	8/25	$ 1,689,750.00	6%
25121.	Arnold, MO - Above and Below, MOAW, Cessna Dr.	Missouri American Water	Arnold	MO	Jefferson	CIPP - MO	Midwest	Travis Jerrels	8/25	$ 154,050.00	100%
25122.	Highland, IL - CIPP Sewer Rehab 2025, PW-03-25	City of Highland	Highland	IL	Madison	CIPP - IL	Midwest	Travis Jerrels	8/25	$ 347,481.00	96%
25123.	San Francisco, CA -A Ruiz, DIR#20250593524, WW-730	San Francisco Public Utilities Commission	San Francisco	CA	San Francisco	CIPP - CA	Pacific	Ben Summersett	8/25	$ 2,048,880.00	0%
25124.	Durham, NC - Teraflex, 250058, American Tobacco Waterline	City of Durham	Durham	NC	Durham	CIPP - NC	Southeast	Nakeita Love	8/25	$ 535,229.80	1%
25125.	Zeeland, MI - Site Work Solutions, Jefferson Ave Storm Sewer	City of Zeeland	Zeeland	MI	Ottawa	CIPP - MI	Midwest	Dawn Young	8/25	$ 111,910.00	98%
25126.	Troy, MO - 2025-2026 CIPP Lining	City of Troy	Troy	MO	Lincoln	CIPP - MO	Midwest	Travis Jerrels	8/25	$ 287,196.00	0%
25128.	Jacksonville, AR - Diamond Const, Hwy 67	City of Jacksonville	Jacksonville	AR	Pulaski	CIPP - AR	Southeast	Regan Roy	8/25	$ 33,966.00	100%
25129.	Belton, MO - 2025 Sewer Rehabilitation	City of Belton	Belton	MO	Cass	CIPP - MO	Midwest	Nick Jacobs	8/25	$ 897,485.00	62%
25131.	Trimble, MO - Kissick, 25059, MOAW	Missouri American Water	Trimble	MO	Clinton	CIPP - MO	Midwest	Nick Jacobs	8/25	$ 147,750.00	100%
25132.	Hannibal, MO - Stormwater PS Levee	City of Hannibal	Hannibal	MO	Marion	CIPP - MO	Midwest	Nick Pryor	8/25	$ 119,370.00	0%
25133.	O'Fallon, MO - Stone Ridge CIPP Project 8, Duckett Creek	Duckett Creek Sanitary District	O'Fallon	MO	St. Charles	CIPP - MO	Midwest	Travis Jerrels	8/25	$ 579,396.75	100%
25135.	Fort Meade, MD - CIPP 2025 Sewer Main Lining - TO 3	American Water Military Services Group	Fort Meade	MD	Anne Arundel	CIPP - MD	Atlantic	Ken Sprau	9/25	$ 682,744.00	0%
25136.	Broward County, FL - Envirowaste, OPN2118843B1_1	Broward County	County	FL	Broward	CIPP - FL	Southeast	Chris Hee	9/25	$ 41,880.00	0%
25137.	Mesa, AZ - Hunter Contracting, 25423, Medina Station Offsite	Simoncre Buddy, LLC	Mesa	AZ	Maricopa	CIPP - AZ	Pacific	Victor Villalobos	9/25	$ 124,180.00	0%
25138.	Pasco County, FL - IFB-BW-25-073, As Needed CIPP-MASTER	Pasco County, Florida	County	FL	Pasco	CIPP - FL	Southeast	Chris Hee	9/25	$ -	0%
25139.	Phoenix, AZ - JOC 244-B, 2-Step Sanitary Sewer Rehab (WIFA)	City of Phoenix	Phoenix	AZ	Maricopa	CIPP - AZ	Pacific	Victor Villalobos	9/25	$ -	0%
25140.	DeBary, FL - 27-25 Trenchless Sanitary & Storm MASTER	City of DeBary	DeBary	FL	Volusia	CIPP - FL	Southeast	Chris Hee	9/25	$ -	0%
25140.01	DeBary, FL - 27-25 Trenchless Sanitary & Storm WO 1	City of DeBary	DeBary	FL	Volusia	CIPP - FL	Southeast	Chris Hee	10/25	$ 364,672.00	0%
25141.	Springfield, MO - Emery Sapp, 1525119, Springfield-Branson A	City of Springfield, MO	Springfield	MO	Greene	CIPP - MO	Midwest	Zachary Ericson	9/25	$ 894,942.00	0%
25142.	Shawnee, KS - Wiedenmann, 877, Windsor Neighborhood	City of Shawnee	Shawnee	KS	Johnson	CIPP - KS	Midwest	Nick Jacobs	9/25	$ 343,514.00	0%
25143.	Kissimmee, FL - CIPP Services - MASTER	City of Kissimmee	Kissimmee	FL	Osceola	CIPP - FL	Southeast	Taylor Savoie	9/25	$ -	0%
25143.01	Kissimmee, FL - CIPP Services, WO 1, Westlake Drive	City of Kissimmee	Kissimmee	FL	Osceola	CIPP - FL	Southeast	Taylor Savoie	9/25	$ 113,800.00	0%
25144.	Morrisville, NC - Weaver Forest Way CIPP Repair	Town of Morrisville	Morrisville	NC	Wake	CIPP - NC	Southeast	Taylor Savoie	9/25	$ 32,760.00	100%
25146.	Topeka, KS - Kings Const, SE 6th - Golden Ave to Rice Road	City of Topeka	Topeka	KS	Shawnee	CIPP - KS	Midwest	Zachary Ericson	9/25	$ 96,750.00	0%
25147.	Mesa, AZ - Granite, 1637559, Val Vista Dr	City of Mesa	Mesa	AZ	Maricopa	CIPP - AZ	Pacific	Victor Villalobos	9/25	$ 267,701.18	0%
25148.	Phoenix, AZ - The Universal Group, Laveen Farms, Ashton Wood	City of Phoenix	Phoenix	AZ	Maricopa	CIPP - AZ	Pacific	Victor Villalobos	9/25	$ 175,736.00	0%
25149.	Payson, AZ - CIPP Lining, Green Valley Water	Green Valley Water	Payson	AZ	Gila	CIPP - AZ	Pacific	Victor Villalobos	9/25	$ 175,391.05	100%
25150.	Charles County, MD - Ryon Woods & Route 5 Area Sewer	Charles County Government	Waldorf	MD		CIPP - MD	Atlantic	Zach Adcock	9/25	$ 455,975.58	0%
25151.	Charles County, MD - Hampshire Area Sewer	Charles County Government	Waldorf	MD	Charles	CIPP - MD	Atlantic	Zach Adcock	9/25	$ 706,399.44	0%
25152.	O'Fallon, MO - 2025 & 2026 Sewer Lining Project	City of O'Fallon	O'Fallon	MO	St. Charles	CIPP - MO	Midwest	Travis Jerrels	9/25	$ 596,403.00	0%
25153.	Lake St. Louis, MO - Inspect Pipe AI, Jetter Crew	Public Water Supply District No. 2	Lake St. Louis	MO	St. Charles	CIPP - MO	Midwest	Travis Jerrels	9/25	$ -	0%
25154.	Orlando, FL - IFB25-0364, Storm Line Rehab MASTER	City of Orlando	Orlando	FL	Orange	CIPP - FL	Southeast	Chris Hee	9/25	$ -	0%
25154.01	Orlando, FL - IFB25-0364, Storm Line Rehab, WO 1	City of Orlando	Orlando	FL	Orange	CIPP - FL	Southeast	Chris Hee	11/25	$ 2,459,898.00	0%
25155.	Caltrans, CA - Granite, CT 05-1S9204, Hwy 1 EFA Sinkhole	State of CA Dept of Transportation	Watsonville	CA	Santa Cruz	CIPP - CA	Pacific	Ben Summersett	9/25	$ 412,881.70	0%
25156.	Edgerton, KS - 2025 CDBG 3rd & Hulett Sanitary Sewer	City of Edgerton	Edgerton	KS	Johnson	CIPP - KS	Midwest	Nick Jacobs	9/25	$ 226,010.00	102%
25157.	Valley Park, MO - MSD, Grand Glaize Treatment Plant	Msd Grand Glaize Treatment Plant	Valley Park	MO	St. Louis	CIPP - MO	Midwest	Travis Jerrels	9/25	$ 6,325.00	25%
25158.	St. Louis, MO - MSD, IR 2026 A, 53195, 13024-015.1	Metropolitan St. Louis Sewer District	St. Louis	MO	STL & Unincorpor	CIPP - MO	Midwest	Travis Jerrels	10/25	$ 5,239,856.00	0%
25158.01	St. Louis, MO - MSD, IR 2026A, 13024-015.1, CITY	Metropolitan St. Louis Sewer District	St. Louis	MO	CITY	CIPP - MO	Midwest	Travis Jerrels	11/25	$ -	0%
25159.	Swartz Creek, MI - Sanitary Sewer Maintenance Services	City of Swartz Creek	Swartz Creek	MI	Genesee	CIPP - MI	Midwest	Dawn Young	10/25	$ 21,500.00	0%
25160.	Atlanta, GA - RDJE, GA Tech Harrison Square Storm Drain	Georgia Tech University	Atlanta	GA	City	CIPP - GA	Southeast	Nakeita Love	10/25	$ 38,497.00	100%
25161.	Northville (City), MI - East Cady Street Sanitary Lining	City of Northville	Northville	MI	Wayne & Oakland	CIPP - MI	Midwest	Joshua Parker	10/25	$ 91,690.00	27%
25162.	Lake Quivira, KS - McAnany, 18" CIPP Lining	Quivira, Inc.	Lake Quivira	KS	Johnson & Wyand	CIPP - KS	Midwest	Zachary Ericson	10/25	$ 29,800.00	100%
25163.	Marshall, MO - MegaKC, 833 AGRA, Conagra MH Replacement	Conagra	Marshall	MO	Saline	CIPP - MO	Midwest	Nick Jacobs	10/25	$ 25,495.00	100%
25164.	Caseyville, IL - Sunny Hill Acres Sanitary Sewer Lining	Caseyville Township	Caseyville	IL	St. Clair	CIPP - IL	Midwest	Travis Jerrels	10/25	$ 469,915.00	14%
25165.	Louisburg, KS - CIPP Sewer Main Lining 2025	City of Louisburg	Louisburg	ks	Miami	CIPP - KS	Midwest	Nick Jacobs	10/25	$ 123,543.00	0%
25166.	Sacramento County, CA - North Star, DIR 20250563738, 25-85	County of Sacramento	Sacramento	CA	Sacramento	CIPP - CA	Pacific	Todd Chalk	10/25	$ 65,433.00	100%
25167.	Creve Coeur, MO - Pfund, Olia Village, Subc #1340	10300 Development, LLC	Creve Coeur	MO	St. Louis	CIPP - MO	Midwest	Travis Jerrels	10/25	$ 57,000.00	0%
25168.	Cobb County, GA - S3052, FY25 Interceptor Sewer Rehab	Cobb County Water System	Marietta	GA	Cobb	CIPP - GA	Southeast	Dan Graham	10/25	$ 15,363,530.00	0%
25169.	Phoenix, AZ - Clearwater Pipelines, Upper Canyon	City of Phoenix	Phoenix	AZ	Maricopa	CIPP - AZ	Pacific	Victor Villalobos	10/25	$ 42,875.00	0%
25170.	Reno, NV - Granite, Reno-Tahoe Airport, GA East & Taxilane	Reno-Tahoe Airport Authority	Reno	NV	Washoe	CIPP - NV	Pacific	Todd Chalk	10/25	$ 498,131.55	12%
25171.	Redford, MI - Sewer Lining Services MASTER	Charter Township of Redford	Redford	MI	Wayne	CIPP - MI	Midwest	Dawn Young	10/25	$ -	0%
25171.01	Redford, MI - Sewer Lining Services, WO 1	Charter Township of Redford	Redford	MI	Wayne	CIPP - MI	Midwest	Dawn Young	12/25	$ 263,538.00	0%

25172.	Hunnewell, MO - MDC 53-02-50, Hunnewell Lake CA Kettle Drain	Missouri Dept of Conservation	Hunnewell	MO	Shelby	CIPP - MO	Midwest	Nick Pryor	10/25	$ 49,500.00	0%
25173.	Mesa, AZ - Hunter Contracting, 22449, Ductile Iron Ph 4	City of Mesa	Mesa	AZ	Maricopa	CIPP - AZ	Pacific	Victor Villalobos	10/25	$ 869,930.00	0%
25174.	Folsom, CA - ARB, DIR#20240418925, Basin 4, Ph 1	City of Folsom	Folsom	CA	Sacramento	CIPP - CA	Pacific	Ben Summersett	10/25	$ 83,160.00	0%
25175.	St. Louis, MO - 72728, MOAW, Pipeline Water MASTER	Missouri-American Water Company	St. Louis	MO	St. Louis	CIPP - MO	Midwest	Nick Jacobs	10/25	$ -	0%
25176.	North Augusta, SC - 2025-09-4290, Industrial Park WW Pipelin	City of North Augusta	North Augusta	SC	Aiken	CIPP - SC	Southeast	Dan Graham	10/25	$ 820,885.00	0%
25177.	Fairfax, KS - Wiedenmann, 882, Drainage District 2025 CIPP	Fairfax Drainage District	Fairfax	KS	Osage	CIPP - KS	Midwest	Zachary Ericson	10/25	$ 403,586.67	0%
25178.	Pontiac, MI - 2025 Storm Sewer Lining - MASTER	City of Pontiac	Pontiac	MI	Oakland	CIPP - MI	Midwest	Dawn Young	10/25	$ -	0%
25178.01	Pontiac, MI - 2025 Storm Sewer Lining, Work Order 1	City of Pontiac	Pontiac	MI	Oakland	CIPP - MI	Midwest	Dawn Young	10/25	$ -	0%
25179.	Sacramento, CA - 6040, SASD, Lower Central Interceptor	Sacramento Area Sewer District	Sacramento	CA	Sacramento	CIPP - CA	Pacific	Leo Calvario	10/25	$ 94,661,760.00	0%
25180.	Auburn Hills, MI - Old Adams Rd. Sewer	City of Auburn Hills	Auburn Hills	MI	Oakland	CIPP - MI	Midwest	Joshua Parker	10/25	$ 79,400.00	0%
25181.	Kearney, MO - Kissick, 25-046, Kearney I&I	City of Kearney	Kearney	MO	Clay	CIPP - MO	Midwest	Zachary Ericson	10/25	$ 184,110.00	0%
25182.	Lebanon, TN - SBW, 0625-002, 2025 Sewer Rehab	City of Lebanon, Tennessee Utilities Department	Lebanon	TN	Wilson	CIPP - TN	Southeast	Troy Melton	10/25	$ 815,165.00	0%
25183.	Edwardsville, IL - Vandalia/Main St. Sewer Lining	City of Edwardsville	Edwardsville	IL	Madison	CIPP - IL	Midwest	Travis Jerrels	11/25	$ 54,912.00	101%
25184.	Nashville, TN - 99216-A.23.04, Earthman Fork	The Metro Gov of Nashville & Davidson County	Nashville	TN	Davidson	CIPP - TN	Southeast	Regan Roy	11/25	$ 6,525,985.00	0%
25185.	Warrenton, MO - 2025 CIPP Lining Project	City of Warrenton	Warrenton	MO	Warren	CIPP - MO	Midwest	Nick Pryor	11/25	$ 188,160.00	14%
25186.	Palm Beach Gardens, FL - Seacoast UA, Sewer Rehab 2026	Seacoast Utility Authority	Palm Beach Gardens	FL	Palm Beach	CIPP - FL	Southeast	Chris Hee	11/25	$ 750,000.00	0%
25187.	Columbus, IN - 2025 Sewer & Manhole Rehab	Columbus City Utilities	Columbus	IN	Bartholomew	CIPP - IN	Midwest	Chris Vogt	11/25	$ 1,656,418.00	0%
25188.	Wyandotte County, KS - Stormwater Utility Community MASTER	CIS UG KCK, LLC	Kansas City	KS	Wyandotte	CIPP - KS	Midwest	Brent Adams	11/25	$ -	0%
25189.	Henry County, GA - Lateral Seals	Henry County Water Authority	County	GA		CIPP - GA	Southeast	Dan Graham	11/25	$ 26,950.00	0%
25190.	Dearborn, MI - 2025-026 Combined Sewer Proj 2025	City of Dearborn	Dearborn	MI	Wayne	CIPP - MI	Midwest	Joshua Parker	11/25	$ 645,514.00	0%
25191.	Caltrans, CA - DeSilva Gates, DIR 502473; 03-4H6004	State of CA Dept of Transportation	Auburn	CA	Placer	CIPP - CA	Pacific	Ben Summersett	11/25	$ 57,210.00	100%
25192.	Newport, TN - Morgan Contr, Basin K Sewer Outfall Rehab	Newport Utilities	Newport	TN	Cocke	CIPP - TN	Southeast	Troy Melton	11/25	$ 493,050.50	0%
25193.	Stuart, FL - CIPP Lining	City of Stuart	Stuart	FL	Martin	CIPP - FL	Southeast	Eve Tinis	11/25	$ 206,556.00	0%
25194.	San Antonio, TX - 2023 Sewer Main 2, CO-00827, Job 23-4517	San Antonio Water System	San Antonio	TX	Bexar	CIPP - TX	Pacific	Roger Terrazas	11/25	$ 26,242,531.00	0%
25195.	Orange County, FL - Y25-799, University Shores, Pkg 4	Orange County	Orlando	FL	Orange	CIPP - FL	Southeast	Dan Banken	11/25	$ 1,362,439.00	0%
25196.	San Antonio, TX - 2023 Sewer Main 1, CO-00870, Job 23-4516	San Antonio Water System	San Antonio	TX	Bexar	CIPP - TX	Pacific	Roger Terrazas	11/25	$ 10,907,924.00	0%
25197.	San Antonio, TX - 2022 Inflow Pkg 1A, CO-00886, Job 24-4520	San Antonio Water System	San Antonio	TX	Bexar	CIPP - TX	Pacific	Roger Terrazas	11/25	$ 1,567,550.00	0%
25198.	Manalapan, FL - Storm Drain Pipe Rehab	Town of Manalapan	Manalapan	FL	Palm Beach	CIPP - FL	Southeast	Eve Tinis	11/25	$ 24,353.00	0%
25199.	Jerseyville, IL - Helmkamp, 4779, ILAW Jerseyville Lagoons	Illinois American Water	Jerseyville	IL	Jersey	CIPP - IL	Midwest	Travis Jerrels	11/25	$ 199,665.00	0%
25200.	Los Angeles County, CA - 5756, Joint Outfall J Unit 1E	LA County Sanitation District No 2	LA & Rancho Palos V	CA	Los Angeles	CIPP - CA	Pacific	Leo Calvario	11/25	$ 17,854,050.00	0%
25201.	Medford, OR - 2026 WW Collection, MSC-D-2602	City of Medford	Medford	OR	Jackson	CIPP - OR	Pacific	Nathaniel Rodriguez	11/25	$ 1,888,535.20	0%
25202.	Sarasota County, FL - SR2720-01, Cat. A, 12"-18" MASTER	Sarasota County	Sarasota	FL	Sarasota	CIPP - FL	Southeast	Chris Hee	11/25	$ -	0%
25203.	Cleveland, OH - Noce, St. Clair 24" BulletLiner	City of Cleveland	Cleveland	OH	Cuyahoga	BulletLiner - OH	Midwest	Cory Street	11/25	$ 285,000.00	0%
25204.	Phoenix, AZ - JAG, 17th Place & Rose Ln	City of Phoenix	Phoenix	AZ	Maricopa	CIPP - AZ	Pacific	Victor Villalobos	12/25	$ 31,220.00	0%
25205.	Chesterfield, MI - P0046-2025, 54" FCIPP Sewer Lining	Charter Township of Chesterfield	Chesterfield	MI	Macomb	CIPP - MI	Midwest	Joshua Parker	12/25	$ 275,777.00	0%
25206.	North Port, FL - Gabo Road 36"	City of North Port	North Port	FL	Sarasota	CIPP - FL	Southeast	Chris Hee	12/25	$ 121,422.50	0%
25207.	Olathe, KS - PN 1-R-001-24, Cardinal Dr & Meadowbrook	City of Olathe	Olathe	KS	Johnson	CIPP - KS	Midwest	Zachary Ericson	12/25	$ 433,850.00	0%
25208.	Rockledge, FL - CIPP Lining, Troon and Levitt	City of Rockledge	Rockledge	FL	Brevard	CIPP - FL	Southeast	Chris Hee	12/25	$ 49,801.00	0%
25209.	Montgomery, AL - D4006100, 2026 CIPP Rehab (Jenkins Creek)	Water Works & Sanitary Sewer Board	Montgomery	AL	Montgomery	CIPP - AL	Southeast	Dan Graham	12/25	$ 4,032,590.00	0%
25210.	St. Louis, MO - Kelpe Contracting, MSD, 12153, Earth City PS	Metropolitan St. Louis Sewer District	Earth City	MO	St. Louis	CIPP - MO	Midwest	Travis Jerrels	12/25	$ 29,975.00	0%
25211.	Norton Shores, MI - Grand Haven Sanitary Sewer CIPP	City of Norton Shores	Norton Shores	MI	Muskegon	CIPP - MI	Midwest	Joshua Parker	12/25	$ 2,479,456.00	0%
25212.	St. Peters, MO - Buckeye St. Charles Facility Pipe Lining	Buckeye Partners LP	St. Peters	MO	St. Charles	CIPP - MO	Midwest	Travis Jerrels	12/25	$ 21,100.00	100%
25213.	Rutledge, PA - 84250-112-SC-25, Stony Creek Interceptor	Central Delaware County Authority	Rutledge	PA	Delaware	CIPP - PA		Ken Sprau	12/25	$ 7,415,090.00	0%
25214.	Las Vegas, NV - LV Paving, 16414, 2026 Annual Sewer Rehab	City of Las Vegas	Las Vegas	NV	Clark	CIPP - NV	Pacific	Leo Calvario	12/25	$ 645,550.00	0%
25215.	Sarasota, FL - 25-31JS City Wide Sanitary Sewer Main Lining	City of Sarasota	Sarasota	FL	Sarasota	CIPP - FL	Southeast	Chris Hee	12/25	$ -	0%
25216.	Decatur, IL - 2025-28, Trenchless Long Lining Repairs	City of Decatur	Decatur	IL	Macon	CIPP - IL	Midwest	Austin Preiss	12/25	$ 712,955.00	0%
25217.	Phoenix, AZ - JAG, Urban S Mountain PCL B North	City of Phoenix	Phoenix	AZ	Maricopa	CIPP - AZ	Pacific	Victor Villalobos	12/25	$ 76,060.00	0%
25218.	Sarasota County, FL - SR2720-02, Cat. B, 21"-36" MASTER	Sarasota County	Sarasota	FL	Sarasota	CIPP - FL	Southeast	Chris Hee	12/25	$ -	0%
25219.	Sarasota County, FL - SR2720-03, Cat. C, 42"-84" MASTER	Sarasota County	Sarasota	FL	Sarasota	CIPP - FL	Southeast	Chris Hee	12/25	$ -	0%
25220.	Marietta, GA - Ruby-Collins, 1380 West Marietta CIPP	City of Atlanta DWM	Marietta	GA	Cobb	CIPP - GA	Southeast	Nakeita Love	1/26	$ 80,500.00	0%
25221.	Plymouth, MI - Sanitary Cleaning & Televising	Charter Township of Plymouth	Plymouth	MI	Wayne	CIPP - MI	Midwest	Joshua Parker	1/26	$ -	0%
25222.	PA American Water - #76167 MSA Sewer Cleaning, Lining, Rehab	Pennsylvania American Water Company	Various	PA	Various	CIPP - PA	Atlantic	Ken Sprau	1/26	$ -	0%

SAK Construction Completed Project List

VP Job #	Project Name	Owner's Contact Information	Address	Superintendent	Project Manager	Type	Completed Date	Completed Amount	Percent Complete	Footage Complete	Diameters
10803.14	**Tamarac, FL CIPP Lining Repairs I & I, 2016**	Scott London, City of Tamarac P 954.597.3753 F 954.597.3520	10101 State Street Tamarac, FL 33321	Angie Miller	Randy Hansbrough	CIPP - FL	10/15/2016	$2,852,609.16	100%	24045	8: 23745, 10: 300
10804.20	**Prescott, AZ 2015-183, Small Dia Sanitary Rehab**	Scott Gregorio, City of Prescott P 928-777-1628 scott.gregorio@prescott-az.gov	1505 Sundog Ranch Rd Prescott, Az 86301	James Bower	Brian Ackerman	CIPP - AZ	6/28/2016	$735,290.69	100%	9980	6: 215, 8: 3280, 10: 1301, 12: 4324, 18: 860
10804.21	**St. Joseph, MO Sewer Lining 2015, R40089-05**	Gary Leftin, City of St. Joseph P 816.27.4626	1100 Frederick Ave. St. Joseph, MO 64501	Danny Brown	Randy Mather	CIPP - MO	4/26/2016	$146,286.50	100%	2723	8: 249, 10: 423, 12: 1059, 15: 364, 24: 224, 36: 404
10804.22	**Orlando, FL L.B. McLeod Rd Sanitary Sewer Rehab CIP0059**	Charles Conklin, City of Orlando P 407.246.3182 charlie.con14in@cityoforlando.net	400 South Orange Avenue Orlando, FL 32801	Brad Schenning	Leo Calvario	CIPP - FL	5/6/2016	$2,261,368.29	100%	3488	48: 3488
10804.23	**Lakeland, FL PO 264292, Sept 2015 thru 2016**	Kim Goldener, City of Lakeland P 863.834.6592 kim.golderen@lakelandgov.net	1825 Glendale Street Lakeland, FL 33803	Stan Krause	Randy Hansbrough	CIPP - FL	9/15/2016	$625,257.25	100%	19602	8: 17034, 10: 2568
10804.24	**St. Joseph, MO Sewer Lining 2016, R40089-06**	Gary Leftin, City of St. Joseph P 816.271.4626	1100 Frederick Ave. St. Joseph, MO 64501	Danny Brown	Randy Mather	CIPP - MO	7/26/2016	$89,464.15	100%	2386	8: 949, 10: 434, 12: 690, 24: 157, 30: 156
10804.26	**Prescott, AZ Small Diameter SS Rehabilitation Using CIPP Trenchless Technolgy Contract #2017-027**	Scott Gregorio, City of Prescott 928.777.1628 scott.gregorio@prescott-az.gov	Public Work Departmen 433 N. Virgina St Prescott, AZ 86301	James Bower	David Burbank	CIPP - AZ	6/30/2017	$608,089.11	100%	10888	8: 10888
10804.27	**St. Joseph, MO Sewer Lining 2016, R40089-07**	Gary Leftin, City of St. Joseph P 816.271.4626	1100 Frederick Ave. St. Joseph, MO 64501	Danny Brown	Randy Mather	CIPP - MO	5/9/2017	$253,713.05	100%	8545	8: 5233, 10: 1498, 12: 1156, 15: 484, 18: 70, 24: 104
10804.28	**St. Joseph, MO Sewer Lining 2017, R40089-08**	Gary Leftin, City of St. Joseph P 816.271.4626	1100 Frederick Ave. St. Joseph, MO 64501	Danny Brown	Randy Mather	CIPP - MO	1/26/2018	$242,623.60	100%	8413	8, 10, 12, 15,
10804.29	**St. Joseph, MO Sewer Lining 2018, R43101-09**	Keven Schneider, City of St. Joseph P 816.271.4626	1100 Frederick Ave. St. Joseph, MO 64501	Danny Brown	Brent Adams	CIPP - MO	6/13/2018	$578,109.90	100%	12951	8, 10, 12, 18, 24, 27, 36, 42, 48
10804.30	**St. Joseph, MO Sewer Lining, Meadow TraiLump Sum**	Keven Schneider, City of St. Joseph P 816.271.4626	1100 Frederick Ave. St. Joseph, MO 64501	Danny Brown	Brent Adams	CIPP - MO	10/16/2018	$169,511.45	100%	2465	8: 2465
10804.31	**Palm Springs, FL CIPP & MH Rehab**	Andy Klausner, Village of Palm Springs P 561.714.2763 aklausner@vpsfl.org	2400 Kirk Rd Palm Springs, FL 33461	Brett Rae	Stan Krause	CIPP - FL	3/19/2019	$232,121.75	100%	6223	8: 5740, 10: 483
10804.32	**Wentzville, MO Amendement 1**	John Gripentrog, City of Wentzville P 636.327.5102 F 636.639.2075 John.Gripentrog@wentzvillemo.org	310 W Pearce Blvd Wentzville, MO 63385	Jeff Hirtz	Nick Pryor	CIPP - MO	1/31/2019	$135,033.00	100%	298	8: 298
10804.33	**O Fallon, MO 2018 Sanitary Sewer Lining/Rehab**	Kevin Hampe, City of O'Fallon P 636-379-7600 khampe@ofallon.mo.us	401 S. Cool Springs Rd. O'Fallon, MO 63366	Alan Stuhlsatz	Travis Jerrels	CIPP - MO	3/2/2021	$993,475.00	100%	43989	8: 43989
10804.34	**O Fallon, MO 2018 Sanitary Sewer Lining/Rehab**	Kevin Hampe, City of O'Fallon P 636-379-7600 khampe@ofallon.mo.us	401 S. Cool Springs Rd. O'Fallon, MO 63366	Alan Stuhlsatz	Travis Jerrels	CIPP - MO	3/31/2021	$472,465.00	100%	20742	8: 19405, 10: 1337
10804.35	**St. Joseph, MO Sewer Lining 2019**	Kevin Schneider, City of St. Joseph P 816.271.4848 kschneider@ci.st-joseph.mo.us	1100 Frederick Ave. St. Joseph, MO 64501	Jeff Hirtz	Nick Pryor	CIPP - MO	10/23/2019	$692,874.20	100%	15859	8, 10, 12, 15, 18, 21, 24, 30
10804.36	**Jackson, MO 2019 Sewer Lining Program**	Clint Brown, City of Jackson P 573-243-3568 cbrown@jacksonmo.org	101 Court Street Jackson, MO 63755	Alan Stuhlsatz	Chris Vogt	CIPP - MO	8/14/2019	$97,707.50	100%	3563	8: 3563
10804.39	**Rocklin, CA Stormwater Pipe Replacement**	Rick Lawrence, City of Rocklin P 916.625.5521 richard.lawrence@rocklin.ca.us	4081 Alvis Court Rocklin, CA 95677	Brandon Smith	Todd Chalk	CIPP - CA	9/14/2020	$150,000.00	100%	490	12: 330, 15: 19, 18: 141
10804.40	**St. Joseph, MO Sewer Lining 2020, Riverside**	Kevin Schneider, City of St. Joseph P 816.271.4848 kschneider@ci.st-joseph.mo.us	1100 Frederick Ave. St. Joseph, MO 64501	Jeff Hirtz	Nick Pryor	CIPP - MO	9/30/2021	$3,911,246.25	100%	10702	36: 10702
10804.41	**St. Joseph, MO Sewer Lining 2020**	Kevin Schneider, City of St. Joseph P 816.271.4848 kschneider@ci.st-joseph.mo.us	1100 Frederick Ave. St. Joseph, MO 64501	Jeff Hirtz	Nick Pryor	CIPP - MO	11/12/2020	$529,305.50	100%	16840	8: 13134, 10: 1807, 12: 540, 15: 740, 18: 495, 24: 124
10804.42	**Palm Springs, FL FY 2020 CIP Annual I/I**	Andy Klausner, Village of Palm Springs P 561.714.2763 aklausner@vpsfl.org	2400 Kirk Rd Palm Springs, FL 33461	Tommi Botti	Stan Krause	CIPP - FL	11/12/2020	$254,180.25	100%	8278	8
10804.43	**Rocklin, CA Stormwater Pipe Replacement - 2**	Rick Lawrence, City of Rocklin P 916.625.5521 richard.lawrence@rocklin.ca.us	4081 Alvis Court Rocklin, CA 95677	Pete Voelker	Todd Chalk	CIPP - CA	3/3/2022	$737,218.96	100%	2808	12, 18, 21, 24, 27, 42, 54
10804.44	**Prescott, AZ 2021-038, CIPP Rehab**	Scott Gregorio, City of Prescott 928.777.1628 scott.gregorio@prescott-az.gov	Public Work Departmen 433 N. Virgina St Prescott, AZ 86301	Fernando Avila	David Burbank	CIPP - AZ	2/9/2021	$612,040.21	100%	10338	8: 10338
10804.47	**St. Joseph, MO 2021, 1st Release**	Kevin Schneider, City of St. Joseph P 816.271.4848 kschneider@ci.st-joseph.mo.us	1100 Frederick Ave. St. Joseph, MO 64501	Danny Brown	Nick Pryor	CIPP - MO	11/15/2021	$677,395.25	100%	11660	8, 10, 12, 18, 30, 42
10804.48	**Lake Jackson, TX Shy Pond Outfall East**	Kevin Schneider, City of St. Joseph P 816.271.4848 kschneider@ci.st-joseph.mo.us	915 Stratton Ridge Rd Clute, Texas 77531	James Bower	Tommy Schultz	CIPP - TX	11/18/2021	$150,000.00	100%	100	60
10804.49	**Troy, MO 2022 CIPP Lining**	Kevin Schneider, City of St. Joseph P 816.271.4848 kschneider@ci.st-joseph.mo.us	336 Excalibur Blvd Troy, MO 63379	Alan Stuhlsatz	Travis Jerrels	CIPP - MO	3/29/2022	$109,649.00	100%	3740	8: 2986, 10: 754
10804.50	**Palm Springs, FL FY - 2022 CIPP Annual I/I**	Kevin Schneider, City of St. Joseph P 816.271.4848 kschneider@ci.st-joseph.mo.us	2400 Kirk Rd Palm Springs, FL 33461	Thomas Botti	Stan Krause	CIPP - FL	6/29/2022	$257,851.25	100%	6989	8: 4924, 10: 2065
10804.52	**St. Joseph, MO 2022 , 1st Release, Sanitary Sewer CIPP**	Jackson Jones, City of St. Joseph 816-271-4848 jjones@stjosephmo.gov	1100 Frederick Ave. St. Joseph, MO 64501	Bobby McIntyre	Brent Adams	CIPP - MO	8/22/2023	$635,813.34	100%	9419	8: 6846,10: 176, 12: 855, 15: 408, 18: 428, 24: 177, 36: 529
10804.53	**St. Joseph, MO 2022 ,2nd Release,Storm Culverts & Geokret**	Jackson Jones, City of St. Joseph 816-271-4848 jjones@stjosephmo.gov	1100 Frederick Ave. St. Joseph, MO 64501	Bobby McIntyre	Brent Adams	CIPP - MO	8/22/2023	$107,699.50	100%	894	12: 44,15: 850
10804.55	**Pasadena, MD Anne Arundel County Public Schools**	Rob Barton, Anne Arundel County Public Schools, 443-770-5911 mbarton@aacps.org	9034 Fort Smallwood Rd. Pasadena, MD 21122	Marco Antonelli	Zach Adcock	CIPP - MD	12/1/2022	$19,050.20	100%	172	6: 172
10804.56	**Prescott, AZ Forest Hylands**	Scott Gregorio, City of Prescott 928-202-1957 scott.gregorio@prescott-az.gov	1505 Sundog Ranch Road, Prescott, AZ 86301	Garrick Rodgers	David Burbank	CIPP - AZ	1/23/2023	$149,166.00	100%	1198	8: 1198
10804.57	**Palm Springs, FL FY 2023 Trenchless Technology Rehab**	Lazaro Farrey, Village of Palm Springs P 561-598-0859 lfarrey@vpsfl.org	226 Cypress Lane Palm Springs, FL 33461	Blake Kimball	Stan Krause	CIPP - FL	4/23/2023	$268,427.00	100%	5167	8: 4097, 10: 1070

SAK Construction Completed Project List

VP Job #	Project Name	Owner's Contact Information	Address	Superintendent	Project Manager	Type	Completed Date	Completed Amount	Percent Complete	Footage Complete	Diameters
10804.58	**St. Joseph, MO** **FY 2023 CIPP & Manhole Rehab**	Jackson Jones, City of St. Joseph 816-271-4848 jjones@stjosephmo.gov	1100 Frederick Ave. St. Joseph, MO 64501	James Brown	Brent Adams	CIPP - MO	3/27/2024	$727,135.11	100%	9553	8: 3681, 10: 1343, 12: 2166, 15: 1002, 24: 875,
10804.61	**Rocklin, CA** **Stormwater Pipe Replacement - 2023**	Richard Lawrence, City of Rocklin P 616.625.5521 richard.lawrence@rocklin.ca.us	4081 Alvis Court, Rocklin, CA 95677	Pete Voelker	Todd Chalk	CIPP - CA	12/20/2023	$617,000.00	100%	680	66
10804.62	**Savannah, MO 2023 Sewer Lining**	Brucy Lundy, City of Savannah 816-324-7503 brucelundysavmo@gmail.com	402 Court Street Savannah, MO 64485	Bobby McIntyre	Brent Adams	CIPP - MO	4/2/2024	$475,411.95	100%	9751	8: 9180, 24: 571
10804.63	**Palm Springs, FL** **CIPP Lining, Work Auth SAK-U04**	Contact Name, Village of Palm Springs Phone Email		TBD	Stan Krause	CIPP - FL	6/13/2024	$279,839.00	100%	5071	8: 4969, 10: 102
10804.67	**Payson, AZ** **South Vista Road, Green Valley Water**	Contact Name, Owner Phone Email			Victor Villalobos	CIPP - AZ	6/14/2024	$593,380.40	100%	3548	10: 3548
10804.68	**Prescott, AZ** **2025-064, Sundog Trunk Main Rehab**	Contact Name, City of Prescott Phone Email			Victor Villalobos	CIPP - AZ	10/23/2024	$863,207.71	100%	1904	21: 1904
10804.69	**Warrenton, MO 2024 CIPP Lining Project**	Contact Name, City of Warrenton Phone Email			Nick Pryor	CIPP - MO	11/30/2024	$96,748.00	100%	2780	6: 235, 8: 2545
10804.81	**DeKalb,GA Contract 1283955, Release 1**	DeKalb County, GA No.1283955, DeKalb County 678-428-6194 amkennedy@dekalbcountyga.gov	180 Sam's St. 3rd Floor Bldg. 2, Decatur,GA 30030	Ronny Tidwell	Gabe Cummings	CIPP - GA	6/22/2023	$1,888,807.06	100%	11219	8: 11219
10804.82	**DeKalb, GA P5C4**	Dekalb County, GA Contract No. 1283955, DeKalb County 678-428-6194 amkennedy@dekalbcountyga.gov	180 Sam's St. 3rd Floor Bldg. 2, Decatur,GA 30030	Ronny Tidwell	Gabe Cummings	CIPP - GA	7/22/2023	$146,282.06	100%	1063	8: 1063
10804.83	**DeKalb,GA P5C11**	Dekalb County, GA Contract No. 1283955, DeKalb County 678-428-6194 amkennedy@dekalbcountyga.gov	180 Sam's St. 3rd Floor Bldg. 2, Decatur,GA 30030	Ronny Tidwell	Gabe Cummings	CIPP - GA	7/22/2023	$725,932.55	100%	5090	8: 5090
10804.88	**DeKalb, GA CAP Development 2**	DeKalb County, GA Contract No 1283955, DeKalb County 678-428-6194 amkennedy@dekalbcountyga.gov	180 Sam's St. 3rd Floor Bldg. 2, Decatur,GA 30030	Ronny Tidwell	Gabe Cummings	CIPP - GA	2/29/2024	$3,120,023.56	100%	12268	8: 9492, 10: 763, 12: 1039, 15: 728, 21: 123, 24: 123
12162.06	**WSSC, MD** **IDIQ Sewer Main, TO #6**	Sam Edoror, Washington Suburban Sanitary Commission P 301.206-8842	14051 Sweitzer Lane Laurel, MD 20707	Chad Rusher	Bob Quackenbush	CIPP - MD	3/28/2016	$3,737,235.37	100%	2691	8: 1393, 18: 1298
12162.11	**WSSC, MD** **Sligo Creek, TO #11**	Monet Lea, Washington Suburban Sanitary Commission P 301.206-8842	14051 Sweitzer Lane Laurel, MD 20707	Marco Antonelli	Brandt Childs	CIPP - MD	4/14/2021	$3,292,765.74	100%	3894	8: 3737, 18: 157
12185.01	**WSSC, MD** **CI/CK6003E11, CI6003A11, Rock Creek, TO #01**	Walid Halboni Washington Suburban Sanitary Commission P 301.206.8732	14051 Sweitzer Lane Laurel, MD 20707	Chad Rusher/ Josh Grote	Bob Quackenbush	CIPP - MD	4/4/2016	$1,620,291.65	100%	7217	8, 10, 12, 14/15, 18
12185.03	**WSSC, MD** **CI/CK6003E11, CI6003A11, Rock Creek, TO #03**	Walid Halboni Washington Suburban Sanitary Commission P 301.206.8732	14051 Sweitzer Lane Laurel, MD 20707	Chad Rusher	Bob Quackenbush	CIPP - MD	12/1/2017	$2,579,000.02	100%	3769	8, 10, 12, 14, 18, 20, 30
12185.04	**WSSC, MD** **CI/CK6003E11, CI6003A11, Rock Creek, TO #04**	Walid Halboni Washington Suburban Sanitary Commission P 301.206.8732	14051 Sweitzer Lane Laurel, MD 20707	Chad Rusher	Bob Quackenbush	CIPP - MD	4/5/2016	$4,479,971.45	100%	13118	8: 1160, 10: 2071, 15: 2990, 18: 1781, 27: 4206, 30: 910
12185.12	**WSSC, MD** **CI/CK6003E11, CI6003A11, Rock Creek, TO #12**	Walid Halboni Washington Suburban Sanitary Commission P 301.206.8732	14051 Sweitzer Lane Laurel, MD 20707	Chad Rusher	Bob Quackenbush	CIPP - MD	2/28/2018	$5,857,868.44	100%	5543	8: 2675, 18: 389, 24: 1521, 30: 109, 36: 849
12189.08	**WSSC, MD CI6000A11, Paint Bra, TO#08**	Wayne Morris, Washington Suburban Sanitary Commission P 301.206.8036	14051 Sweitzer Lane Laurel, MD 20707	Chad Rusher	Bob Quackenbush	CIPP - MD	10/2/2017	$3,027,102.58	100%	6400	8; 498, 24: 2736, 27: 2802, 30: 363
12189.12	**WSSC, MD CI6000A11, Paint Bra, TO#12**	Wayne Morris, Washington Suburban Sanitary Commission P 301.206.8036	14051 Sweitzer Lane Laurel, MD 20707	Chad Rusher	Bob Quackenbush	CIPP - MD	10/17/2016	$214,513.24	100%	311	8: 311
13009.12	**Pima County, AZ** **B & F Contracting, Work Order 12**	Dan Foley, Sub to B&F Contracting, Inc. P 623.582.1170 F 623.582.3761	11011 North 23rd Avenue Phoenix, AZ 85028	Jarmann Frazer	David Burbank	CIPP - AZ	2/4/2016	$301,241.50	100%	9001	8: 8727, 10: 274
13009.13	**Pima County, AZ** **B & F Contracting, Work Order 13**	Dan Foley, Sub to B&F Contracting, Inc. P 623.582.1170 F 623.582.3761	11011 North 23rd Avenue Phoenix, AZ 85028	James Bower	David Burbank	CIPP - AZ	6/8/2016	$215,518.00	100%	6742	8: 6742
13009.14	**Pima County, AZ** **B & F Contracting, Work Order 14**	Dan Foley, Sub to B&F Contracting, Inc. P 623.582.1170 F 623.582.3761	11011 North 23rd Avenue Phoenix, AZ 85028	Gary Rodgers	David Burbank	CIPP - AZ	4/7/2017	$191,611.00	100%	1257	30: 1257
13009.15	**Pima County, AZ** **B & F Contracting, Work Order 15**	Dan Foley, Sub to B&F Contracting, Inc. P 623.582.1170 F 623.582.3761	11011 North 23rd Avenue Phoenix, AZ 85028	James Bower/Gary Rogers	David Burbank	CIPP - AZ	2/23/2017	$126,715.00	100%	3381	8: 3381
13020.00	**Lambs Grove, IA** **2013 Lambs Grove Wastewater Collection**	Steve Klocke, City of Lambs Grove P 515.964.2020 F 515.964.7938	1351 Iowa Speedway Dr. Newton, IA 50208	Jeff Hirtz	Travis Jerrels	CIPP - IA	11/15/2016	$343,634.06	100%	8020	6: 2757, 8: 5263
13042.04	**WSSC, MD** **CI5300A11, Northwest, TO# 04**	Monet Lea, Washington Suburban Sanitary Commission P 301.206.8036	14051 Sweitzer Lane Laurel, MD 20707	Chad Rusher	Bob Quackenbush	CIPP - MD	3/14/2019	$854,805.02	100%	1461	8: 1461
13042.05	**WSSC, MD** **CI5300A11, Northwest, TO# 05**	Monet Lea, Washington Suburban Sanitary Commission P 301.206.8036	14051 Sweitzer Lane Laurel, MD 20707	Chad Rusher	Bob Quackenbush	CIPP - MD	11/1/2017	$570,067.52	100%	363	8: 363
13042.10	**WSSC, MD** **CI5300A11, Northwest, TO# 10**	Greg Gutzwiller, Washington Suburban Sanitary Commission P 301.206.8036	14051 Sweitzer Lane Laurel, MD 20707	Chad Rusher	Bob Quackenbush	CIPP - MD	2/10/2016	$480,596.70	100%	2649	8: 1494, 10: 1155
13042.11	**WSSC, MD** **CI5300A11, Northwest, TO# 11**	Monet Lea, Washington Suburban Sanitary Commission P 301.206.8036	14051 Sweitzer Lane Laurel, MD 20707	Chad Rusher	Bob Quackenbush	CIPP - MD	10/31/2017	$202,331.71	100%	1179	8: 1179
13042.14	**WSSC, MD** **CI5300A11, Northwest, TO# 14**	Greg Gutzwiller, Washington Suburban Sanitary Commission P 301.206.8036	14051 Sweitzer Lane Laurel, MD 20707	Chad Rusher	Bob Quackenbush	CIPP - MD	4/17/2016	$465,172.94	100%	797	8: 797

SAK Construction Completed Project List

VP Job #	Project Name	Owner's Contact Information	Address	Superintendent	Project Manager	Type	Completed Date	Completed Amount	Percent Complete	Footage Complete	Diameters
13042.18	**WSSC, MD CI5300A11, Northwest, TO# 18**	Monet Lea, Washington Suburban Sanitary Commission P 301.206.8036	14051 Sweitzer Lane Laurel, MD 20707	Marco Antonelli	Brandt Childs	CIPP - MD	5/4/2020	$249,412.73	100%	131	8: 131
13042.19	**WSSC, MD CI5300A11, Northwest, TO# 18**	Monet Lea, Washington Suburban Sanitary Commission P 301.206.8036	14051 Sweitzer Lane Laurel, MD 20707	Marco Antonelli	Farooq Ahmed	CIPP - MD	6/30/2021	$333,362.99	100%	1950	6: 433, 8: 1223, 10: 295
13059.00	**St. Louis, MO (MSD) Public I/I Reduction, 20018,1114-015.1**	Steve Welnick, Metropolitan STL Sewer District P 314.768.6378 swelnick@stlmsd.com	2350 Market Street St. Louis, MO 63101	Matt HIrtz	Tim Bussen	CIPP - MO	3/27/2016	$3,625,811.80	100%	36329	6", 8", 10",12", 15", 18", 21", 24", 30",
13104.01	**WSSC, MD PM5295A11, Western B, TO# 01**	Walid Halboni Washington Suburban Sanitary Commission P 301.206.8732	14051 Sweitzer Lane Laurel, MD 20707	Chad Rusher	Travis Ewing	CIPP - MD	10/17/2016	$2,207,905.88	100%	5154	8: 2100, 10: 813, 12: 683, 14: 532, 16: 233, 20: 325, 24: 468
13104.05	**WSSC, MD PM5295A11, Western B, TO# 05**	Walid Halboni Washington Suburban Sanitary Commission P 301.206.8732	14051 Sweitzer Lane Laurel, MD 20707	Chad Rusher	Travis Ewing	CIPP - MD	8/4/2016	$1,504,121.33	100%	510	16: 510
13104.06	**WSSC, MD PM5295A11, Western B, TO# 06**	Walid Halboni Washington Suburban Sanitary Commission P 301.206.8732	14051 Sweitzer Lane Laurel, MD 20707	Chad Rusher	Travis Ewing	CIPP - MD	3/15/2016	$602,673.71	100%	263	8: 263
13104.11	**WSSC, MD PM5295A11, Western B, TO# 11**	Walid Halboni Washington Suburban Sanitary Commission P 301.206.8732	14051 Sweitzer Lane Laurel, MD 20707	Chad Rusher	Travis Ewing	CIPP - MD	4/12/2017	$4,955,940.70	100%	12590	36, 42
13104.12	**WSSC, MD PM5295A11, Western B, TO# 12**	Walid Halboni Washington Suburban Sanitary Commission P 301.206.8732	14051 Sweitzer Lane Laurel, MD 20707	Chad Rusher	Travis Ewing	CIPP - MD	10/18/2016	$336,766.90	100%	688	8: 688
13104.16	**WSSC, MD PM5295A11, Western B, TO# 16**	Walid Halboni Washington Suburban Sanitary Commission P 301.206.8732	14051 Sweitzer Lane Laurel, MD 20707	Chad Rusher	Travis Ewing	CIPP - MD	2/7/2018	$1,781,975.19	100%	2692	24: 1966, 27: 726
13104.27	**WSSC, MD PM5295A11, Western B, TO# 27**	Walid Halboni Washington Suburban Sanitary Commission P 301.206.8732	14051 Sweitzer Lane Laurel, MD 20707	Chad Rusher	Travis Ewing	CIPP - MD	12/21/2016	$341,223.04	100%	782	8: 782
13104.91	**WSSC, MD PM5295A11, Western B, TO #21A**	Walid Halboni Washington Suburban Sanitary Commission P 301.206.8732	14051 Sweitzer Lane Laurel, MD 20707	Marco Antonelli	Zach Adcock	CIPP - MD	6/7/2022	$4,662,112.93	100%	7295	8,42,66
13104.92	**WSSC, MD PM5295A11, Western B, TO # 2A**	Walid Halboni Washington Suburban Sanitary Commission P 301.206.8732	14051 Sweitzer Lane Laurel, MD 20707	Chad Rusher	Travis Ewing	CIPP - MD	8/14/2017	$1,086,282.26	100%	3168	16: 1251, 24: 1917
13109.04	**WSSC, MD PM5337A12, Watts Branch, TO# 04**	Walid Halboni Washington Suburban Sanitary Commission P 301.206.8732	14051 Sweitzer Lane Laurel, MD 20707	Marco Antonelli	Brandt Childs	CIPP - MD	9/19/2020	$3,421,614.18	100%	6304	8: 3755, 27: 2295, 30: 254
13109.05	**WSSC, MD PM5337A12, Watts Branch, TO# 05**	Walid Halboni Washington Suburban Sanitary Commission P 301.206.8732	14051 Sweitzer Lane Laurel, MD 20707	Chad Rusher	Bob Quackenbush	CIPP - MD	4/2/2018	$1,131,400.66	100%	3107	8: 3107
13109.12	**WSSC, MD PM5337A12, Watts Branch, TO# 12**	Walid Halboni Washington Suburban Sanitary Commission P 301.206.8732 walid.halboni@wsscwater.com	14051 Sweitzer Lane Laurel, MD 20707	Marco Antonelli	Brandt Childs	CIPP - MD	3/27/2020	$1,682,243.75	100%	2551	8: 2551
13109.14	**WSSC, MD PM5337A12, Watts Branch, TO# 14**	Walid Halboni Washington Suburban Sanitary Commission P 301.206.8732 walid.halboni@wsscwater.com	14051 Sweitzer Lane Laurel, MD 20707	Marco Antonelli	Brandt Childs	CIPP - MD	6/22/2020	$1,804,603.38	100%	279	8: 279
13130.00	**Baton Rouge, LA Allen & LeBlanc, Airline Hwy/Goodwood Blvd**	Paul Johnson, Sub to Allen & LeBlanc, LLC P 225.272.4599 pj@allenleblanc.com	PO Box 15789 Baton Rouge, LA 70895	Chad Rusher	Jimmy Witt	CIPP - LA	7/15/2016	$2,575,952.43	100%	76636	8, 10, 12, 15, 18, 24
13142.00	**Baltimore, MD SC 906 Improvements to Sanitary Sewer**	Tony Mbakwe, City of Baltimore P 410.396.8330 C 410.207.7465 anthony.mbakwe@baltimorecity.gov	2901 Druid Park Drive, Suite 103 Baltimore, MD 21215	Chad Rusher Mandel Mays/ Josh Grote	Matthew Rhoads	CIPP - MD	6/14/2016	$18,312,255.83	100%	59311	8, 10, 12, 15, 18, 20, 22, 27, 33, 52
13151.08	**Phoenix, AZ - 4108JOC112, 137025, JOA 008**				David Burbank	CIPP - AZ	4/20/2016	$998,429.74	100%	29107	8: 25979, 12: 3128
13151.09	**Phoenix, AZ - 4108JOC112, 137025, JOA 009**				David Burbank	CIPP - AZ	9/27/2016	$951,776.38	100%	25746	8: 25746
13151.13	**Phoenix, AZ 4108JOC112, 137025, JOA 013**	Karla Lu, City of Phoenix 602.534.3927 karla.lu@phoenix.gov	200 W. Washington St. 5th Floor Phoenix, AZ 85003	Gary Rodgers	David Burbank	CIPP - AZ	8/25/2017	$1,498,973.28	100%	38422	8: 30104, 10: 2002, 12: 4242, 15: 2074
13151.14	**Phoenix, AZ 4108JOC112, 137025, JOA 014**	Michael Brown, City of Phoenix 602.262.4597 michael.brown@phoenix.gov	200 W. Washington St. 5th Floor Phoenix, AZ 85003	Gary Rodgers	David Burbank	CIPP - AZ	11/10/2017	$994,929.91	100%	25812	8: 21016, 10: 660, 12: 1468, 15: 2668
13151.15	**Phoenix, AZ 4108JOC112, 137025, JOA 015**	Michael Brown, City of Phoenix 602.262.4597 michael.brown@phoenix.gov	200 W. Washington St. 5th Floor Phoenix, AZ 85003	Gary Rodgers	David Burbank	CIPP - AZ	6/21/2018	$824,184.79	100%	23399	8: 18308, 10: 2386, 12: 2705
13151.16	**Phoenix, AZ 4108JOC112, 137025, JOA 016**	Michael Brown, City of Phoenix 602.262.4597 michael.brown@phoenix.gov	200 W. Washington St. 5th Floor Phoenix, AZ 85003	Gary Rodgers	David Burbank	CIPP - AZ	11/14/2018	$1,393,256.65	100%	40931	8: 36102, 10: 4829
13151.17	**Phoenix, AZ 4108JOC112, 137025, JOA 017**	Michael Brown, City of Phoenix 602.262.4597 michael.brown@phoenix.gov	200 W. Washington St. 5th Floor Phoenix, AZ 85003	Gary Rodgers	David Burbank	CIPP - AZ	12/13/2019	$1,399,045.26	100%	37241	8: 29727, 10: 7462, 12: 52
13151.18	**Phoenix, AZ 4108JOC112, 37025, JOA 018**	Michael Brown, City of Phoenix 602.262.4597 michael.brown@phoenix.gov	200 W. Washington St. 5th Floor Phoenix, AZ 85003	Gary Rodgers	David Burbank	CIPP - AZ	10/2/2019	$549,740.52	100%	6786	8: 4246, 10: 841, 12: 1699
13151.19	**Phoenix, AZ 4108JOC112, 37025, JOA 019**	Michael Brown, City of Phoenix 602.262.4597 michael.brown@phoenix.gov	200 W. Washington St. 5th Floor Phoenix, AZ 85003	Gary Rodgers	David Burbank	CIPP - AZ	2/7/2020	$846,824.70	100%	6941	8: 4707, 10: 535, 12: 1699
13153.00	**St. Louis, MO (MSD) Deer Creek 2014, 20093, 11849-015.1**	Steve Welnick, Metropolitan STL Sewer District P 314.768.6378 swelnick@stlmsd.com	2350 Market Street St. Louis, MO 63101	Jason Laney Matt	Travis Jerrels	CIPP - MO	5/1/2017	$2,670,347.15	100%	49648	6", 8", 10", 12", 15", 16", 18", 21", 24", 36"
13154.00	**St. Louis, MO (MSD) Rock Hill, 20081, 11885-015.1**	Steve Welnick, Metropolitan STL Sewer District P 314.768.6378 swelnick@stlmsd.com	2350 Market Street St. Louis, MO 63101	Matt HIrtz	Travis Jerrels	CIPP - MO	4/1/2017	$3,378,847.24	100%	53960	6", 8", 10", 12", 15", 18", 21", 30", 36"
14028.01	**Baton Rouge, LA 14-CP-UF-0001, Annual Parishwide CIPP 2014, Work Order 1**	City of Baton Rouge & Parish of East B.R. P 225.389.3259 F 225.389.4841	100 St. Ferdinand Street, Room 309 PO Box 1471 Baton Rouge, LA 70821	Terry Sprague	Jimmy Witt	CIPP - LA	2/28/2016	$521,866.00	100%	6104	8, 10, 15, 30, 36

SAK Construction Completed Project List

VP Job #	Project Name	Owner's Contact Information	Address	Superintendent	Project Manager	Type	Completed Date	Completed Amount	Percent Complete	Footage Complete	Diameters
14028.03	**Baton Rouge, LA 14-CP-UF-0001, Annual Parishwide CIPP 2014, Work Order 3**	City of Baton Rouge & Parish of East B.R. P 225.389.3259 F 225.389.4841	100 St. Ferdinand Street, Room 309 PO Box 1471 Baton Rouge, LA 70821	Jimmy Witt	Jimmy Witt	CIPP - LA	12/14/2016	$432,094.62	100%	8137	8: 4102, 12: 952, 18: 3083
14035.02	Johnson County, KS CMSD Contract No. 19, Term 2014-2015, Auth 2	Joseph Barnes, Johnson County Wastewater P 913.715.8684	11811 S. Sunset Drive, #2500 Olathe, KS 66061	Danny Brown	Randy Mather	CIPP - KS	11/16/2016	$1,416,385.00	100%	62244	8: 57868, 10: 2254, 12: 837, 15: 1285
14035.03	**Johnson County, KS CMSD Contract No. 19, Term 2015-2016, Auth 3**	Joseph Barnes, Johnson County Wastewater P 913.715.8684	11811 S. Sunset Drive, #2500 Olathe, KS 66061	Danny Brown	Randy Mather	CIPP - KS	12/12/2016	$1,634,467.00	100%	71484	8: 67291, 10: 994, 12: 1189, 15: 1811, 18: 199
14035.05	**Johnson County, KS CMSD Contract No. 19, Term 2016-2017, Auth 5**	Joseph Barnes, Johnson County Wastewater P 913.715.8684	11811 S. Sunset Drive, #2500 Olathe, KS 66061	Danny Brown	Randy Mather	CIPP - KS	9/30/2017	$1,793,169.50	100%	74702	8, 10, 12, 15, 18, 36
14035.07	**Johnson County, KS CMSD Contract No. 19, Term 2016-2017, Auth 7**	Joseph Barnes, Johnson County Wastewater P 913.715.8684	11811 S. Sunset Drive, #2500 Olathe, KS 66061	Danny Brown	Randy Mather	CIPP - KS	6/1/2018	$2,071,163.65	100%	82774	8, 10, 12, 15, 18, 21, 24, 30
14035.08	**Johnson County, KS CMSD Contract No. 19, Term 2016-2017, Auth 8**	Joseph Barnes, Johnson County Wastewater P 913.715.8684	11811 S. Sunset Drive, #2500 Olathe, KS 66061	Danny Brown	Randy Mather	CIPP - KS	9/16/2018	$1,124,069.10	100%	43794	8: 39455, 10: 968, 12: 330, 15: 479, 18: 1402, 30: 1160
14035.09	**Johnson County, KS CMSD Contract No. 19, Term 2017-2018, Auth 9**	Joseph Barnes, Johnson County Wastewater P 913.715.6848	11811 S. Sunset Drive, #2500 Olathe, KS 66061	Danny Brown	Randy Mather	CIPP - KS	2/3/2020	$1,363,852.95	100%	55849	8: 53869, 10: 791, 12: 510, 15: 298, 18: 261, 30: 120
14035.11	**Johnson County, KS CMSD Contract No. 19, , Auth 11**	Brandon Morris, Johnson County Wastewater P 913.207.5234 Brandon.Morris@jcw.org	4800 Nall Avenue Mission, KS 66202	Danny Brown	Brent Adams	CIPP - KS	12/19/2019	$1,348,775.90	100%	55872	8: 52567, 10: 2359, 12: 265, 15: 681
14044.00	**Baton Rouge, LA Allen & LeBlanc, Scenic Hwy/Spanish Town R**	Paul Johnson, Sub to Allen & LeBlanc, LLC P 225.272.4599 pj@allenleblanc.com	PO Box 15789 Baton Rouge, LA 70895	Mike Blasczyk	Jimmy Witt	CIPP - LA	7/15/2016	$869,615.25	100%	35431	8: 34542, 10: 889
14091.00	**St. Louis, MO MSD, Black Creek, 20163, 11689-015.1**	Steve Welnick, Metropolitan STL Sewer District P 314.768.6378 swelnick@stlmsd.com	2350 Market Street St. Louis, MO 63101	Jason Laney Matt	Travis Jerrels	CIPP - MO	9/25/2019	$3,954,922.26	100%	57880	6", 8", 10", 12", 15", 16", 18", 21", 24", 30"
14096.00	**Nashville, TN 347428, 2013 Annual Sewer Rehab**	Greg Ballard, P.E.,Metropolitan Government of Nashville and Davidson County 615.915.0384 greg.ballard@nashville.gov	PO Box 196301 Nashville, TN 37219	Glenn Spears/ Stan	Roger Egli	CIPP - TN	1/8/2016	$3,786,666.89	100%	22943	8, 10, 12, 15, 18, 21, 24, 30
14104.00	**Santa Fe, TX Galveston County WCID No. 8, Sewer Line Rehab**	Engineer: John D Mercer & Associates, Inc. John D Mercer, PE P 409.741.8500 F 409.741.8501	PO Box 930 Galviston, TX 77553	Mike Blasczyk	Jimmy Witt	CIPP - TX	7/15/2016	$1,580,049.22	100%	28258	8: 12954, 10: 6684, 12: 2537, 14: 755, 15: 4303, 18: 1025
14117.00	**St. Louis, MO Bissell - Coldwater - Missouri - Meramec Public I/I Reduction (2015) Contract D**	Steve Welnick, Metropolitan STL Sewer District P 314.768.6378 swelnick@stlmsd.com	2350 Market Street St. Louis, MO 63101	Jason Laney Matt	Travis Jerrels	CIPP - MO	5/17/2021	$3,679,561.88	100%	44852	6", 8", 10", 12", 15", 18", 24", 27", 30"
14121.00	**St. Louis, MO Bissell - Coldwater - Missouri - Meramec Public I/I Reduction (2015) Contract E**	Steve Welnick, Metropolitan STL Sewer District P 314.768.6378 swelnick@stlmsd.com	2350 Market Street St. Louis, MO 63101	Jason Laney Matt	Travis Jerrels	CIPP - MO	12/21/2020	$2,113,506.65	100%	43607	8: 40819, 10: 903, 12: 1521, 18: 323, 24: 41
14133.00	**St. Louis, MO Infrastructure Repairs (Rehabilitation) (FY2015) Contract A (11708-015.1)**	Mark Dietiker, Metropolitan St. Louis Sewer District P 314.768.6380 swelnick@stlmsd.com	2350 Market Street St. Louis, MO 63101	Jason Laney Matt	Travis Jerrels	CIPP - MO	8/9/2017	$4,161,800.92	100%	109230	6", 8", 10", 12", 15", 18", 21", 24", 27", 30", 36", 42"
14137.00	**Baltimore, MD Sanitary Contract No. 920-Improvements to the Gwynns FalLump Sum Sewershed Collection System - Area A**	Aurelian Nicolau, Baltimore City 410.396.3440 aurelian.nicolau@baltimorecity.gov	1105 Abel Wolman Municpal Building Baltimore, MD 21202	Chad Rusher/ Josh Grote	Matthew Rhoads	CIPP - MD	10/13/2018	$17,533,990.74	100%	109143	8: 96360, 10: 4330, 12: 5981, 15: 1862, 18: 554, 24: 26
14138.00	**St. Louis, MO Ballas Road Subtrunk South Public I/I Reduction (11934-015.1)**	Steve Welnick, Metropolitan STL Sewer District P 314.768.6378 swelnick@stlmsd.com	2350 Market Street St. Louis, MO 63101	Jason Laney Matt	Travis Jerrels	CIPP - MO	1/16/2019	$2,995,719.53	100%	67128	8: 62332, 10: 2318, 12: 795, 15: 360, 24: 1171, 27: 152
15007.05	**Pima County, AZ Amendments 024 thru 026**	Brian Janski, Sub to KE&G Construction P 520.940.8423 bjanski@kegtus.com	5100 South Alvernon Way Tuscon, AZ 85706	Glenn Spears	Brian Ackerman	CIPP - AZ	4/11/2016	$163,544.80	100%	4337	8: 2733, 10: 1604
15007.06	**Pima County, AZ Amendments 028 thru 034**	Brian Janski, Sub to KE&G Construction P 520.940.8423 bjanski@kegtus.com	5100 South Alvernon Way Tuscon, AZ 85706	Glenn Spears	Brian Ackerman	CIPP - AZ	9/21/2016	$276,611.00	100%	7758	8: 7342, 12: 416
15007.07	**Pima County, AZ Amendements 035 thru 039**	Brian Janski, Sub to KE&G Construction P 520.940.8423 bjanski@kegtus.com	5100 South Alvernon Way Tuscon, AZ 85706	Gary Rodgers	David Burbank	CIPP - AZ	5/19/2017	$384,591.10	100%	10510	8: 9233, 10: 436, 12: 841
15009.00	**St. Louis, MO Infrastructure Repairs (Rehabilitation) (FY2015) Contract B (11866-015.1)**	Steve Welnick, Metropolitan STL Sewer District P 314.768.6378 swelnick@stlmsd.com	2350 Market Street St. Louis, MO 63101	Matt Hirtz / John Price	Travis Jerrels	CIPP - MO	3/18/2019	$4,901,721.77	100%	27780	6, 8, 10, 12, 15, 18, 21, 24, 28, 30, 36, 42, 54, 60, 66
15011.01	**Las Vegas, NV 2015 Annual Sanitary Sewer Rehabilitation**	Jake Marshall, Sub to Las Vegas Paving Corp. P 702.251.5800 jake.marshall@lvpaving.com	4420 S. Decatur Blvd. Las Vegas, NV 89103	Jarmann Frazer	Brian Ackerman	CIPP - NV	6/15/2016	$531,720.00	100%	8164	8: 7952, 10: 212
15018.00	**St. Louis, MO Storm Sewer Rehabilitation (Maline OMCI Infrastructure Repair) (12476-015.1) Contract # 20249**	Steve Welnick, Metropolitan STL Sewer District P 314.768.6378 swelnick@stlmsd.com	2350 Market Street St. Louis, MO 63101	Matt HIrtz	Travis Jerrels	CIPP - MO	1/30/2017	$351,924.50	100%	1757	12, 15, 18, 60
15019.00	**Long Beach, CA Long Beach Main Pumping Plant Facility Upgrades**	Kyle Cushman, Sub to Steve P. Rados, Inc. P 714.835.4612 kcushman@radoscompanies.com	2002 E. McFadden Ave. Suite 200 Santa Ana, CA 92705	James Bower	Leo Calvario	CIPP - CA	10/31/2017	$383,500.00	100%	110	72
15021.00	**Memphis, TN Wolf River at McLean Siphon River**	Scott Morgan, P.E. Environmrntal Construction City of Memphis Division of Public Works P 901.576.7125 scott.morgan@memphistn.gov	125 North Main Street Room 354 Memphis, TN 38103	Bill Seibert	Dan Swidrak	CIPP - TN	2/2/2016	$4,892,708.47	100%	1054	48, 84
15037.00	**St. Louis, MO Lower Meramec Watershed I/I Removal, 11650-015.1**	Steve Welnick, Metropolitan STL Sewer District P 314.768.6378 swelnick@stlmsd.com	2350 Market Street St. Louis, MO 63103	John Price	Tim Bussen	CIPP - MO	10/15/2016	$5,922,075.47	100%	17866	36, 42, 48, 54, 60
15040.00	**Baltimore County, MD Herring Run Basin 31 Sewer Rehabilitation**	Lisa Eicholtz, PE, Baltimore County P 410.887.3781 leicholtz@baltimorecountymd.gov	111 W. Chesapeake Ave, Suite 307 Towson, MD 21204	Chad Rusher/ Josh Grote	Matthew Rhoads	CIPP - MD	12/31/2019	$1,739,755.40	100%	22839	8: 22797, 12: 42

SAK Construction Completed Project List

VP Job #	Project Name	Owner's Contact Information	Address	Superintendent	Project Manager	Type	Completed Date	Completed Amount	Percent Complete	Footage Complete	Diameters
15043.00	**Washington, DC** **C - G100: Local Sewer Rehabilitation 1**	Peter Tinubu District of Columbia Water and Sewer Authority dba DC Water P 202.787.4017 peter.tinubu@dcwater.com	5000 Overlook Ave., SW Washington, DC 20032	Chad Rusher	Bob Quackenbush	CIPP - DC	10/28/2020	$5,862,290.90	100%	13605	8, 10, 12, 15, 18, 21, 24, 24x36 Horseshoe, 32x36 Ellipse, 36,
15046.00	**Kansas City, MO Middle Blue River Sewer Rehab**	John Dougherty, Sub to Kissick Construction Co., Inc. P 816.363.5530 jdougherty@kissickco.com	8131 Indiana Ave. Kansas City, MO 64132	Danny Brown	Randy Mather	CIPP - MO	9/5/2017	$1,748,865.19	100%	64310	8: 24671, 10: 25010, 12: 14629
15054.00	**Chattanooga, TN** **Chattanooga Creek Interceptor Rehabilitation, Contract # W-12-023-201**	Bonnie Mumpower, City of Chattanooga P 423.643.6031 bmumpower@chattanooga.gov	Department of Public Works Waste Water Resources Division 455 Moccasin Bend Road Chattanooga, TN 37405	Stan Krause	Loren Goens	CIPP - TN	5/2/2016	$4,109,074.26	100%	7491	24, 30, 36, 42, 48 54
15055.00	**Baton Rouge, LA** **Siegen Lane/I-10 Area Sewer Rehab Project CP Contract No. 13-AR-MS-0033**	Paul Johnson, Sub to Allen & LeBlanc, LLC P 225.272.4599 pj@allenleblanc.com	PO Box 15789 Baton Rouge, LA 70895	Michael Blasczyk	Jimmy Witt	CIPP - LA	12/18/2018	$1,235,039.20	100%	49439	8: 49439
15059.00	**St. Louis, MO** **Forest Brook Sanitary Relief (SKME-003 and SKME-016) Public Rehabilitation and I/I Reduction**	Steve Welnick, Metropolitan STL Sewer District P 314.768.6378 swelnick@stlmsd.com	2350 Market Street St. Louis, MO 63103	Matt Hirtz / John Price	Travis Jerrels	CIPP - MO	1/31/2020	$2,558,973.24	100%	38506	8, 12, 15, 18, 21 , 24, 27, 30, 36
15062.00	**Chattanooga, TN** **Tannery Flats Interceptor Rehabilitation Contract # W-12-025-201**	Bonnie Mumpower, City of Chattanooga P 423.643.6031 bmumpower@chattanooga.gov	Department of Public Works Waste Water Resources Division 455 Moccasin Bend Road Chattanooga, TN 37405	Jeff Oberhofer	Loren Goens	CIPP - TN	5/2/2016	$4,151,505.00	100%	6601	18: 107, 36: 6494
15066.00	**Excelsior Springs, MO Sanitary Sewer Rehab**	Andrew Starkebaum, City of ExceLump Sumior Springs P 816.630.0755 ext 230 astarkebaum@ci.exceLump Sumior-springs.mo.us	103 Water Street ExceLump Sumior Springs, MO 64024	Danny Brown	Randy Mather	CIPP - MO	5/8/2017	$2,482,099.23	100%	32064	8: 24381, 10: 2394, 12: 1988, 15: 909, 18: 101, 24: 1837, 30: 454
15072.00	**St. Louis, MO** **Infrastructure Repairs (Rehabilitation) (FY2015) Contract C**	Steve Welnick, Metropolitan STL Sewer District P 314.768.6378 swelnick@stlmsd.com	2350 Market Street St. Louis, MO 63101	Matt Hirtz / John Price	Travis Jerrels	CIPP - MO	11/20/2017	$4,419,769.74	100%	31691	8, 12, 15, 18, 21, 24, 24 x 36, 27, 30, 30 x 42 36
15073.00	**Lee's Summit, MO 2015 CIPP**	Josh Roach, City of Lee's Summit P 816.969.1970 josh.roach@cityofLump Sum.net	220 SE Green Street Lee's Summit, MO 64063	Danny Brown	Randy Mather	CIPP - MO	5/31/2016	$654,115.25	100%	16760	8: 16273, 10: 357, 12: 130
15080.00	**Washington, DC** **IFB #140050 - Rehabilitation of Sewers Under Building Phase 2**	District of Columbia Water and Sewer Authority dba DC Water Scott Stangle, Arcadis, DC Water's PM Team P 410. 381.1990 Ext 17 scott.stangle@arcadis.com	5000 Overlook Ave., SW Washington, DC 20032	Chad Rusher	Bob Quackenbush	CIPP - DC	11/20/2016	$3,237,999.99	100%	2672	10, 12, 18, 21, 30, 45
15082.00	**Orinda, CA** **#3831 City of Orinda 2015 Measure J & L Pavement Rehab**	Eric Barker, Sub to Bay Cities Paving & Grading, Inc. P 925. 446.6022 ebarker@baycities.us	1450 Civic Ct., Bldg. # 400 Concord, CA 94520	Jarmann Frazer	Todd Chalk	CIPP - CA	2/16/2016	$94,498.00	100%	384	18: 294, 22: 90
15083.00	**San Francisco, CA 17th/33rd/37th/Julian/Revere Avenues & Anderson/ElLump Sumworth/IngalLump Sum/Maple/Moultire Streets Sewer Replacement, Contract No. WW-602**	Andrew Mellon, Sub to Shaw Pipeline, Inc. P 415. 337.0190 andrew@shawpipelinesinc.com	150 Executive Park Blvd, Suite 3790 San Francisco, CA 94134	Andrew Johnson	Todd Chalk	CIPP - CA	3/18/2016	$181,293.00	100%	309	2'-6 x 3'-9 (36 - closest)
15084.00	**St. Louis, MO - Bissell** **Coldwater - Missouri - Meramec Public I/I Reduction (2016) Contract A (12060-015.1)**	Steve Welnick, Metropolitan STL Sewer District P 314.768.6378 swelnick@stlmsd.com	2350 Market Street St. Louis, MO 63101	Matt Hirtz / John Price	Travis Jerrels	CIPP - MO	6/12/2018	$3,008,160.42	100%	59448	8, 10, 12, 15, 18, 21, 24, 36
15085.00	**San Francisco, CA** **2127J - Potrero Avenue Roadway Improvements**	Edmond Hom, Sub to A. Ruiz Construction Co. & Assoc., Inc. P 415.647.4010 ehom@aruizconstruction.com	1601 Cortland Avenue San Francisco, CA 94110	Jarmann Frazer	Todd Chalk	CIPP - CA	4/19/2016	$344,414.06	100%	981	18: 348, 36: 633
15089.00	**Belton, MO** **18-Inch - Cleveland to Cambridge**	Zach Matteo, City of Belton P 816. 331.4331 zmatteo@belton.org	520 Main Street Belton, Missouri 64012	Danny Brown	Randy Mather	CIPP - MO	1/21/2016	$183,186.63	100%	2607	18: 2607
15092.00	**Memphis, TN Lick Creek CIPP**	Joe Collins, Sub to Overland Contracting (Black & Veatch) P 913.458.9520 collinsjj@overlandcontracting.com	3485 Poplar Ave Ste 230 Memphis, TN 38111	Gerald Hall	Dan Swidrak	CIPP - TN	5/25/2016	$3,584,874.65	100%	10105	20: 1655, 24: 5443, 27: 1852, 36: 1155
15093.00	**St. Louis, MO (MSD)** **Sewer Rehabilitation in University City Public I/I Reduction - East (WC-02 & WC-03)**	Steve Welnick, Metropolitan STL Sewer District P 314.768.6378 swelnick@stlmsd.com	2350 Market Street St. Louis, MO 63101	Matt Hirtz	Travis Jerrels	CIPP - MO	4/8/2019	$2,912,573.03	100%	51248	6: 294, 8: 43593, 10: 1573, 12: 2543, 21: 324, 24: 721, 27: 2200
15094.00	**Kansas City, MO 51st & Oak**	Dave Scaggs, Sub to Rodriguez Mechanical Contractors P 913.281.1814 daves@rmckc.com	541 S. 11th Street Kansas City, Kansas 66105	Danny Brown	Randy Mather	CIPP - MO	1/8/2016	$32,230.00	100%	166	24: 166
15095.00	**Des Moines, IA** **2015 Sewer Lining Program**	Matt Radermacher, City of Des Moines P 515.283.4076 mkradermacher@dmgov.org	400 Robert D Ray Drive Des Moines, IA 50309	Danny Brown	Randy Mather	CIPP - IA	2/6/2018	$2,837,501.79	100%	7413	10, 12, 18, 24, 30, 36, 48, 54, 60
15096.00	**Pinellas Park, FL** **Annual Cleaning Inspection & Rehabilitation of Sanitary Sewers (Renewal #3)**	Jim Davis, City of Pinellas Park P 727.541.0771 F 727.541.0850 jdavis@pinellas-park.com	8000 60th Street North Pinellas Park, FL 33781	Jeremy Richard/ Stan	Randy Hansbrough	CIPP - FL	10/31/2016	$550,000.00	100%	17130	8: 17060, 36: 70
15098.00	**Nashville, TN** **Whites Creek Trunk Sewer Rehabilitation**	Genario Pittman, The Metropolitan Government of Nashville and Davison County P 615.880.2641 genario.pittman@nashville.gov	730 Second Ave. South Nashville, TN 37219	Stan Krause	Deborah Bartley	CIPP - TN	3/16/2018	$11,141,486.85	100%	41479	8, 10, 12, 15, 18, 27, 30, 42, 54
15099.00	**San Antonio, TX** **Job No. 14-4703; 2015 Ralph St. 54" Rehab Project**	Chuck Clucus, The San Antonio Water System, County of Bexar, State of Texas P 210.233.3198 charles.clucus@saws.org	2800 U.S. Hwy 281 North San Antonio, Texas 78212	James Bower	Brian Ackerman	CIPP - TX	9/30/2016	$5,220,097.72	100%	5441	30, 51, 52, 54
15101.00	**Baton Rouge, LA** **East Blvd/Government St. Sewer Rehab Project**	Matthew Meaux, Sub to Wharton-Smith, Inc. P 337.349.5320 mmeaux@whartonsmith.com	17474 Opportunity Ave Baton Rouge, LA 70817	Mike Stubbs	Jimmy Witt	CIPP - LA	4/11/2018	$523,100.87	100%	20034	6: 3248, 8: 16380, 18: 406

SAK Construction Completed Project List

VP Job #	Project Name	Owner's Contact Information	Address	Superintendent	Project Manager	Type	Completed Date	Completed Amount	Percent Complete	Footage Complete	Diameters
15102.00	**Las Vegas, NV 15.1762.05/PWP #CL-2015-371 - 2016 Annual Sanitary Sewer Rehabilitation**	Nate Smith, Sub to Las Vegas Paving Corp. P 702.251.5800 nate.smith@lasvegaspaving.com	4420 S Decatur Blvd. Las Vegas, NV 89103	Jarmann Frazer	Brian Ackerman	CIPP - NV	7/1/2016	$591,876.00	100%	11614	8: 10457, 10: 558, 12: 599
15104.00	**Baltimore County, MD Contract No. 14207 SX0**	David Bayer, Baltimore County P 410.887.3781 DBayer@baltimorecountymd.gov	111 W. Chesapeake Ave Towson, MD 21204	Chad Rusher/	Matthew Rhoads	CIPP - MD	9/19/2019	$1,471,167.30	100%	23680	8: 22784, 15: 896
15105.00	**Phoenix, AZ Meeker Boulevard Sewer Assessment and Rehabilitation: RH Johnson Blvd to Pyracantha Drive & Sun City Sewr Rehabilitation - 99th Avenue (Projects 1-3)**	Chad Talbot, EPCOR Water Arizona Inc. P 623.445.2404 ctalbot@epcor.com	2355 W Pinnacle Peak Rd., Suite 300 Phoenix, AZ 85027	Jarmann Frazer	Brian Ackerman	CIPP - AZ	3/16/2016	$709,429.50	100%	2547	8: 1838, 18: 214, 21: 495
15107.00	**Overland Park, KS Quik Trip #0157R**	Mary Conley, Sub to Conley Sitework & Utilities P 785.838.4646 maryconleysandu@gmail.com	P.O. Box 250 12321 222nd Street Linwood, KS 66052	Danny Brown	Randy Mather	CIPP - KS	1/15/2016	$21,590.00	100%	425	8: 425
15108.00	**El Dorado, KS SS System Repair & Rehab**	Alan Blough, Sub to Nowak Construction Company P 316.794.8898 alan@nowakconstruction.com	PO Box 218 200 South Goddard Rd. Goddard, Kansas 67052	Danny Brown	Randy Mather	CIPP - KS	5/20/2016	$13,317.00	100%	386	8: 386
15109.00	**Contra Costa County, CA 2015 Sewer Rehabilitation Project Contract No. 7-15**	Randy Leptien, Mt. View Sanitary District P 925.228.4218 randy.leptien@lcc-inc.com	3800 Arthur Road Martinez, CA 94553	Jarmann Frazer	Todd Chalk	CIPP - CA	5/31/2016	$196,708.25	100%	1852	6: 1330, 8: 522
15110.00	**St. Louis, MO (MSD) Infrastructure Repairs (Rehabilitation) (FY2016) Contract A (11709-015.1)**	Steve Welnick, Metropolitan STL Sewer District P 314.768.6378 swelnick@stlmsd.com	2350 Market Street St. Louis, MO 63101	Matt Hirtz / John Price	Travis Jerrels	CIPP - MO	1/31/2020	$4,273,479.30	100%	95915	6, 8, 10, 12, 15, 18, 21, 24, 27, 30, 42, 48
15111.00	**Chicago, IL Glenbrook Sanitary Sewer Rehabilitation, NSA Contract 14-061-3S**	Fred WU, Metropolitan Water Reclamation District of Greater Chicago P 312.751.4025 Frederick.Wu@mwrd.org	100 East Erie Street Chicago, Illinois 60611	Jeff Hirtz	Dan Swidrak	CIPP - IL	2/8/2017	$1,205,741.73	100%	4397	18: 4300, 21: 97
15112.00	St. Louis, MO MSD Florissant Public I/I Reduction (11932-015.1)	Steve Welnick, Metropolitan STL Sewer District P 314.768.6378 swelnick@stlmsd.com	2350 Market Street St. Louis, MO 63101	Matt Hirtz	Travis Jerrels	CIPP - MO	1/18/2019	$2,737,249.03	100%	45696	6, 8, 10, 12, 15, 18, 21, 24, 27, 33
15114.00	**Lawrence, NJ Princeton Pike Sewer Lining**	William P. Hall, Ewing-Lawrence Sewerage Authority P 609. 587.4061 email not on card per M. Rhoads 2.23.16	600 Whitehead Rd. Lawrenceville, NJ 08648	Chad Rusher	Matthew Rhoads	CIPP - NJ	4/21/2016	$262,827.00	100%	1733	16: 1733
15115.00	**Baltimore County, MD Contract No. 15003 SX0**	Louisa Rettew, Baltimore County P 410.887.3781 lrettew@baltimorecountymd.gov	111 W. Chesapeake Ave Towson, MD 21204	Chad Rusher/ Josh Grote	Brandt Childs	CIPP - MD	3/9/2020	$2,405,783.98	100%	33521	8: 32488, 15: 1033
15117.01	**San Francisco, CA 2262J - Add'l @ Randall St.**	Chris Wallace, Sub to M Squared Construction, Inc. P 415.661.6902 Chris@msquaredconstruction.com	1278 20th Ave, Suite C San Francisco, CA 94122	Jarmann Frazer	Todd Chalk	CIPP - CA	6/12/2017	$34,500.00	100%	59	18: 59
15118.00	**Columbia, IL 2015-2016 Sanitary Sewer Line Rehabilitation**	Tim Ahrens, City of Columbia, IL P 618.281.4264 tahrens@columbiaillinois.com	110 West Sand Bank Rd. Columbia, Illinois 62236	Jeff Hirtz	Dan Swidrak	CIPP - IL	4/1/2016	$47,120.00	100%	1984	8: 1984
15119.00	**Rantoul, IL 2015 Sewer lining project**	Peter Passarelli, Rantoul, IL P 217.892.6526 Ppassar@myrantoul.com	200 W. Grove Ave. Rantoul, IL 61866	Jeff HIrtz	Dan Swidrak	CIPP - IL	3/29/2016	$126,514.85	100%	4317	8: 3716, 10: 323, 12: 278
15120.00	**Queen Creek, AZ ALA Sewerline**	Skyler Roussel, Sub to Hunter Contracting Co. P 480.892.0521 skylerr@huntercontracting.com	701 N Cooper Rd. Gilbert, AZ 85233	James Bower	Brian Ackerman	CIPP - AZ	1/4/2016	$39,400.00	100%	450	12: 450
15121.00	**Baltimore, MD SC 937-Improvements to Sanitary Sewers in HR07 and Along Chesterfield Ave in Herring Run Sewershed**	Aurelian Nicolau, Baltimore City 410.396.3440 aurelian.nicolau@baltimorecity.gov	200 N. Holliday St., Room 305 Baltimore, MD 21202	Chad Rusher	Matthew Rhoads	CIPP - MD	12/31/2018	$5,778,099.67	100%	11370	8
15122.00	**Clinton, MO Franklin Street to Green Street Gravity Sewer Replacement**	Chris Helm, Sub to Helm Plumbing P 660.525.4290 helmplumbing@embarqmail.com	217 West Allen Street Clinton, MO 64735	Danny Brown	Randy Mather	CIPP - MO	3/10/2016	$14,690.00	100%	185	12: 185
16002.00	**Peoria, AZ Beardsley Road Segment 4**	Dan Broderick, Sub to Achen-Gardner Engineering, LLC P 480.940.1300 dbroderick@achen.com	550 S 79th St. Chandler, AZ 85226	Andrew Johnson	Brian Ackerman	CIPP - AZ	2/25/2016	$91,504.00	100%	602	30: 602
16003.01	**Lawrence, KS UT1508 2015 SS Rehabilitation CIPP Project**	Nicholas Hoyt, P.E., City of Lawrence - Utilities Department P 785. 832.7882 nhoyt@lawrenceks.org	P.O. Box 708 Lawrence, KS 66046	Danny Brown	Randy Mather	CIPP - KS	4/13/2017	$1,455,370.01	100%	44649	8, 10, 12, 15, 21, 24, 30, 36
16004.00	**Baltimore County, MD Jones FalLump Sum Basin BC04 Sewer Rehabilitation - Contract No. 14245 SX0**	Louisa Rettew, Baltimore County P 410.887.3781 lrettew@baltimorecountymd.gov	111 W. Chesapeake Ave Towson, MD 21204	Chad Rusher/ Josh Grote	Brandt Childs	CIPP - MD	2/2/2020	$1,289,154.37	100%	18994	8: 18559, 10: 435
16005.00	**Baltimore County, MD Dead Run Sewershed Basins DR11 & DR12 SS Rehabilitation - Contract #15084 SX0**	Glen Keller , Baltimore County P 410.887.3781 Gkeller@baltimorecountymd.gov	111 W. Chesapeake Ave Towson, MD 21204	Chad Rusher/ Josh Grote	Brandt Childs	CIPP - MD	9/18/2020	$1,777,538.43	100%	25992	8: 19632, 10: 1916, 12: 2571, 15: 1873
16006.00	**El Dorado HilLump Sum, CA Carson Creek Fitness Center Site Improvements**	Terri Martz, Sub to Doug Veerkamp General Engineering, Inc. P 530.676.0825 terri.martz@dougveerkamp.com	2585 Cold Springs Road Placerville, CA 95667	Jarmann Frazer	Todd Chalk	CIPP - CA	2/29/2016	$18,000.00	100%	200	12: 200
16007.00	**Stockton, CA Primary Influent Pipe Repair, PO 192879**	Ali Gharegozloo, City of Stockton P 209.937.8787 ali.gharegozloo@ci.stockton.ca.us	425 N El Dorado Street Stockton, CA 95202	Andrew Johnson	Todd Chalk	CIPP - CA	3/24/2016	$65,000.00	100%	125	48
16008.00	**Wyandotte County, KS 2015 Sanitary Sewer Rehabilitation & Repair, Contract 2 Project I.D.: 6182**	Kris Finger, Unified Government of Wyandotte County,Kansas City, KS P 913.573.5422 kfinger@wycokck.org	701 N. 7th St. Kansas City, KS 66101	Danny Brown	Randy Mather	CIPP - KS	9/30/2017	$1,745,716.85	100%	26079	8, 10, 12, 15, 18, 24, 30, 36
16009.00	**Florissant, MO SSD North County Garage**	Danny Hance, Sub to Hance Construction P 314.974.0034 danny@hance-construction.com	148 E Pearch Blvd. Wentzville, MO 63385	Matt Hirtz	Tim Bussen	CIPP - MO	9/15/2016	$16,275.75	100%	600	6: 600
16010.00	**Union Sanitary District, CA Alvarado-Niles Road SS Rehabilitation Project (#800-437)**	Chris Elliott, Union Sanitary District P 510.477.7605 chris_elliott@unionsanitary.com	5072 Benson Road Union City, CA 94587	Andrew Johnson	Todd Chalk	CIPP - CA	11/1/2016	$3,249,061.99	100%	9318	8: 125, 27: 8773, 30: 420
16011.00	**Caltrans, CA (Minor B) Contract No: 10A1768 Project ID: 1015000070**	Iqbal Aulakh, California Department of Transportation P 209.333.6958 iqbal.aulahk@dot.ca.gov	1727 30th St. Sacramento, CA 95816	Jarmann Frazer	Todd Chalk	CIPP - CA	9/7/2016	$100,477.50	100%	306	18: 228, 24: 78
16012.00	**Lenexa, KS 2016 Mill and Overlay**	Eric Vossman, Sub to McAnany Construction P 913.631.5440 ericv@mcananyconstruction.com	15320 Midland Drive Shawnee, KS 66217	Danny Brown	Randy Mather	CIPP - KS	2/14/2017	$202,161.00	100%	1093	18, 21, 24, 30, 36, 48

SAK Construction Completed Project List

VP Job #	Project Name	Owner's Contact Information	Address	Superintendent	Project Manager	Type	Completed Date	Completed Amount	Percent Complete	Footage Complete	Diameters
16013.00	**Wheaton Plaza, MD Wheaton Storm Stystem Restoration**	Mike Robarge, Wheaton Plaza Regional Shopping Center P 240.669.0336 mrobarge@westfield.com	11160 Veirs Mill Rd Wheaton, MD 20902	Josh Grote	Bob Quackenbush	CIPP - MD	4/9/2016	$89,568.00	100%	256	36: 256
16014.00	**College Station, TX CIPP Renewal of 300 LF 10" diameter concrete sanitary sewer pipe**	Ruben Bernal, Texas A&M University P 979.845.4614 rbernal@tamu.edu	600 Agronomy Road 1371 TAMU College Station, TX 77843	Mike Stubbs	Jimmy Witt	CIPP - TX	4/19/2016	$33,484.00	100%	216	10: 216
16015.00	**Lyons, KS Municipal Sewer Line Project 2016**	Chris Veatch, The City of Lyons P 620.257.3054 utilityadmin@lyonsks.org	201 West Main P.O. Box 808 Lyons, KS 67554	Danny Brown	Randy Mather	CIPP - KS	9/7/2016	$34,058.40	100%	1104	8: 1104
16017.00	**St. Louis, MO SLU NRH 02 Project #083150.154**	Ethan Gwinn, Sub to Castle Contracting, LLC P 314.421.0042 ethan.gwinn@digcastle.com	345 Marshall Avenue Suite 302 Webster Groves, MO 63119	Matt Hlrtz	Tim Bussen	CIPP - MO	6/16/2016	$37,100.00	100%	90	24: 90
16018.00	**Dubuque, IA FY16 (CIPP) Sanitary Sewer Lining Project**	Denis Ihrig, The City of Dubuque P 563.589.4270 dihrigcityofdubuque.org	50 W. 13th St. Dubuque, IA 52001	Jeff Hlrtz	Dan Swidrak	CIPP - IA	6/25/2016	$440,344.00	100%	12784	8: 8662, 10: 1136, 18: 2986
16019.00	**Los Gatos, CA Los Gatos Creek Trunk Sewer Rehabilitation Project**	Alan Kam, West Valley Sanitation District P 408.385.3030 Akam@westvalleysan.org	100 East Sunnyoaks Avenue Campbell, CA 95008	Jarmann Frazer	Todd Chalk	CIPP - CA	1/16/2019	$1,786,212.40	100%	6598	15: 748, 18: 827, 21: 477, 27: 4546
16020.00	**Macon, MO Sanitary Sewer Line Rehabilitation**	Jack Austin, Macon Municipal Utilities P 660.676.2369	106 West Bourke St. Macon, MO 63552	Jeff Hlrtz	Dan Swidrak	CIPP - MO	6/15/2016	$114,148.00	100%	1807	8: 910, 24: 742, 36: 155
16021.00	**Ed Dorado, KS 15" Sanitary Sewer CIPP on Skelly St.**	Gary Taylor, City of El Dorado P 316.323.5621 gtaylor@eldoks.com	220 E. 1st Avenue El Dorado, KS 67042	Danny Brown	Randy Mather	CIPP - KS	5/20/2016	$41,888.00	100%	616	15: 616
16022.00	**Leavenworth, KS 2015 Sanitary Sewer Rehabilitation and Replacement**	Spencer Foster, Sub to Linaweaver Construction P 913.351.3474 spencer@linaweaver.com	719 Gilman Rd. Lansin, KS 66043	Danny Brown	Randy Mather	CIPP - KS	6/12/2017	$120,424.25	100%	2434	7, 15, 18
16024.00	**Fort Bliss, TX Fort Bliss Water - CIPP Phase IV**	Tony Marquez, Sub to Vemac, Inc. P 915.566.1911 tmarquez@vemac.us	1919 Rio Grande El Paso, TX 79902	Andrew Johnson	Brian Ackerman	CIPP - TX	12/31/2016	$1,544,406.70	100%	32848	6: 2543, 8: 19650, 10: 7941,12: 1372, 15: 1342
16025.00	**St. Paul, MN NAI Rehabilitation - Phase 10 Contract Number 15P303**	Richard Hjelle, Metropolitan Council P 612.328.2680 Contact Email	390 Robert Street North Saint Paul, MN 55101	Jeff Hirtz	Dan Swidrak	CIPP - MN	7/30/2016	$2,365,685.76	100%	3714	36, 42
16026	**Kingsport, TN - Eastman Chemical, 36" Line w/Heavy Roots**				Randy Hansbrough	CIPP - TN	4/22/2016	$35,500.00	100%	283	36: 283
16027.00	**Mission Woods, KS Storm Sewer Lining - Rainbow Ave.**	John Sullivan, City of Mission Woods P 913.432.1550 john.sullivan@westwoodks.org	4700 Rainbow BLVD. Shawnee Mission, Kansas 66205	Danny Brown	Randy Mather	CIPP - KS	5/10/2016	$27,103.50	100%	321	18: 321
16028.00	**Lenexa, KS Post Oak Drainage Improvements**	Bill Reno, Sub to KC Heavy P 913.845.2121 bill.reno@kshvycon.com	19425 State Avenue Tonganoxie, KS 66086	Danny Brown	Randy Mather	CIPP - KS	9/30/2017	$336,547.00	100%	4216	12: 76, 15: 2603, 18: 277, 21: 280, 24: 502, 30: 161, 36: 317
16029.00	**St. Louis, MO (MSD) Manchester Des Peres CIPP Quote**	Justin HueLump Summann, Sub to Budrovich Excavating P 314.892.3030 jhueLump Summann@budrovich.com	10328 Lake Bluff Dr. St. Louis, MO 63123	Matt Hittz	Tim Bussen	CIPP - MO	7/6/2016	$28,626.75	100%	402	8: 402
16032.00	**Memphis, TN Magnolia, Old Loos Hwy 51 Emergency Sewer Repair**	James Hinte, Sub to Magnolia Underground Construction, Inc. P 901.238.7985 jhinte@magnoliaunderground.us	2898 Cayce Road Byhalia, MS 38611	Jeff Hlrtz	Dan Swidrak	CIPP - TN	4/19/2016	$153,475.50	100%	328	42
16033.00	**Wheeling, IL 2016 Sewer Lining Project Contract**	Lana Rudnik, Village of Wheeling P 847.279.6912 lrudnik@wheelingil.gov	2 Community Blvd Wheeling, IL 60090	Jeff Hlrtz	Dan Swidrak	CIPP - IL	6/7/2016	$145,600.50	100%	5294	8: 4526, 10: 768
16034.00	**O'Fallon, MO Citi Mortgage West Lot Sink Hole Repair**	Kimberly Pierce, Sub to Byrne & Jones Construction P 314.567.7997 kpierce@byrneandjones.com	13940 St. Charles Rock Rd St. Louis, MO 63044	Matt Hirtz	Tim Bussen	CIPP - MO	7/8/2016	$32,500.00	100%	310	24: 310
16035.00	**North Charleston, SC Combined Interceptor - Phase 6, CIPP Sanitary Sewer Rehabilitation**	Jarred Jones, North Charleston Sewer District P 843.764.2649 jarred.jones@ncsd.sc.com	PO Box 63008 7225 Stall Road North Charleston, SC 29419	Glenn Spears	Leo Calvario	CIPP - SC	4/27/2017	$6,142,924.29	100%	8243	60, 66
16036.00	**Creve Coeur, MO (MSD) The Grove - CIPP Lining**	Justin HueLump Summann, Sub to Budrovich Excavating P 314.892.3030 jhueLump Summann@budrovich.com	10328 Lake Bluff Dr. St. Louis, MO 63123	Matt Hirtz	Tim Bussen	CIPP - MO	6/15/2016	$19,575.00	100%	50	8: 50
16037.00	**Brooklyn Park, MN 2016 Large Sanitary Sewer Lining Project**	Jon Watson, City of Brooklyn Park P 793.493.8008 jon.watson@brooklynpark.org	5200 85th Ave. N. Brooklyn Park, MN 55443	Jeff Hlrtz	Dan Swidrak	CIPP - MN	7/8/2016	$892,408.00	100%	5435	24: 5113, 27: 322
16038.00	**Shawnee, KS 2015 Stormwater Pipe Repair**	Albert Seeman, Sub to Amino Brothers Co., Inc. P 913.334.2330 al@aminobros.com	8110 Kaw Drive P.O. Box 11277 Kansas City, KS 66111	Danny Brown	Randy Mather	CIPP - KS	7/30/2016	$39,894.00	100%	265	12: 32, 15: 74, 18: 159
16039.00	**Gilbert, AZ Greenfield Road Sinkhole & Force Main Rehabilitation**	Tom Foley, Sub to B & F Contracting P 520.282.1264 tomf@bfcontracting.com	11011 North 23rd Avenue Phoenix, AZ 85028	James Bower	David Burbank	CIPP - AZ	4/28/2016	$72,000.00	100%	177	30, 48
16040.00	**Lake St. Louis, MO Lake St. Louis Blvd. CIPP Lining**	Matt Juelker City of Lake St. Louis P 636.695.4221 mkuelker@LakeSaintLouis.com	307 Parkway Industrial Drive Lake Saint Louis, MO 63367	John Price	Tim Bussen	CIPP - MO	7/14/2016	$47,272.00	100%	153	42
16041.00	**Las Vegas, NV Flamingo Corridor Improvement**	Jeff Anderson, Sub to Las Vegas Paving Corp. 702.251.5800 Jeff.anderson@lasvegaspaving.com	4420 S. Decatur Blvd. Las Vegas, NV 89103	Jarmann Frazer	Brian Ackerman	CIPP - NV	5/8/2016	$25,250.00	100%	350	10: 350
16042.00	**Newton, KS SS Rehab Phase 2**	Alan Blough, Sub to Nowak Construction Company P 316.794.8898 alan@nowakconstruction.com	200 South Goddard Rd. Goddard, KS 67052	Danny Brown	Randy Mather	CIPP - KS	1/2/2017	$57,577.20	100%	2568	6: 788, 8: 1780
16043.00	**Liberty, MO Downtown Liberty Streetscape**	Scott Wolters, Sub to VF Anderson Builders, LLC P 816.935.9852 vfabuilders@yahoo.com	16550 East 227th St. Harrisonville, MO 64701	Danny Brown	Randy Mather	CIPP - MO	6/14/2017	$27,120.00	100%	1200	8: 1200
16044.01	**Lee's Summit, MO 2018 CIPP, 2014-138/3R**	Josh Roach, City of Lee's Summit P 816.969.1970 josh.roach@cityofLump Sum.net	220 SE Green Street Lee's Summit, MO 64063	Danny Brown	Brent Adams	CIPP - MO	4/15/2019	$919,811.20	100%	35960	8: 31728, 10: 3596, 12: 636
16044.02	**Lee's Summit, MO 2019 CIPP, 2014-138/4R**	Jerry Johnson, City Lee's Summit P 816.969.1800 Jerry.Johnson@cityofLump Sum.net	220 SE Green Street Lee's Summit, MO 64063	Danny Brown	Brent Adams	CIPP - MO	3/21/2019	$38,937.50	100%	175	36: 175

SAK Construction Completed Project List

VP Job #	Project Name	Owner's Contact Information	Address	Superintendent	Project Manager	Type	Completed Date	Completed Amount	Percent Complete	Footage Complete	Diameters
16045.00	**Urbana & Champaign Sanitary District (IL) FY17 Collection System Upgrade Project**	Mark Radi, Urbana & Champaign Sanitary District (IL) P 217.367.3409 ext. 1222 mlradi@u-csd.com	1100 E. University Ave. Urbana, IL 61802	Jeff Hirtz	Dan Swidrak	CIPP - IL	4/7/2017	$802,140.48	100%	4320	8: 118, 12: 1693, 21: 499, 33: 2010
16046.00	**Manhattan, KS 2016 CIPP Sewer Lining SS 1607**	Norm Francis, City of Manhattan P 785.587.4583 francisn@cityofmhk.com	1101 Poyntz Ave. Manhattan, KS 66502	Danny Brown	Randy Mather	CIPP - KS	8/18/2016	$440,338.20	100%	20199	8: 20199
16047.00	**North Newton, KS CIPP**	Alan Blough, Sub to Nowak Construction Company P 316.794.8898 alan@nowakconstruction.com	200 South Goddard Rd. Goddard, KS 67052	Danny Brown	Randy Mather	CIPP - KS	8/25/2016	$19,200.00	100%	677	8: 492, 10: 185
16048.00	**Johnston, IA Camp Dodge Sanitary Sewer Lateral Repair - Phase 1**	Jamie Crubaugh, Sub to J & K Contracting P 515.233.5500 ext 12 jcrubaugh@jandkcontracting-ia.com	1307 East Lincoln Way Ames, IA 50010	Danny Brown	Randy Mather	CIPP - IA	1/30/2017	$67,249.00	100%	1566	8: 1066, 12: 500
16049.00	**Davenport, IA F.Y. 2017 Sewer Lining Program**	Sandy Doran, City of Davenport P 563.326.7756 sdoran@ci.davenport.ia.us	226 West Fourth St. Davenport, IA 52801	Jeff Hirtz	Dan Swidrak	CIPP - IA	4/1/2017	$1,542,579.70	100%	52489	8: 31558, 10: 8719, 12: 7887, 15: 56, 16: 853, 18: 2908, 24: 508
16050.00	**Marina, CA Joint Integrated VA/DOD Health Care Center**	Nick Julo, Sub to Otto Construction P 831.251.6326 njulo@ottoconstruction.com	1717 2nd St. Sacramento, CA 95811	Andrew Johnson	Todd Chalk	CIPP - CA	6/16/2016	$168,910.00	100%	780	30: 780
16051.00	**Douglas County, NV NDOT 3627 - Cave Rock TunneLump Sum**	Kurt Matzoll, Sub to Q & D Construction, Inc. P 775.353.7012 kmatzoll@qdconstruction.com	1050 S. 21st St. Sparks, NV 89431	Jarmann Frazer	Todd Chalk	CIPP - NV	8/29/2016	$249,300.00	100%	1126	24: 896, 30: 230
16052.00	**Caltrans, CA Contract No. 03-1F4004; Colfax I-80 Truck Climbing Lane Eastbound I-80 Long Ravine UP to 0.4 Mi East of Magra F**	Stephen Muck, Sub to Teichert Construction P 916.645.4863 smuck@teichert.com	4401 Duluth Avenue Rocklin, CA 95765	Andrew Johnson	Todd Chalk	CIPP - CA	11/30/2017	$936,202.45	100%	5098	18, 24, 30, 36, 48
16053.00	**Avondale, AZ Avondale Blvd Sewer Rehabilitation Project 1A**	Jesus Jaramillo, Sub to Degan Construction, LLC P 602.795.8574 jesus@degancon.com	1402 N. 24th Ave. Phoenix, AZ 85009	James Bower	David Burbank	CIPP - AZ	7/10/2016	$80,821.00	100%	883	24: 883
16054.00	**ST. Louis, MO (MSD) University City Public I/I Reduction - East (Bel-Nor) (12435-015/1)**	Steve Welnick, Metropolitan STL Sewer District P 314.768.6378 swelnick@stlmsd.com	2350 Market St. St. Louis, MO 63103	Matt Hirtz / John Price	Travis Jerrels	CIPP - MO	10/6/2020	$2,024,144.34	100%	30841	6, 8, 10, 12, 15, 18, 21, 24, 30, 36
16055.00	**San Jose, CA 6008 -Fourth Major Interceptor Rehab Phase IIB**	Mark Saturnio, City of San Jose P 408.793.5517 mark.saturnio@sanjoseca.gov	200 E. Santa Clara St. 5th Floor Tower San Jose, CA 95113	Andrew Johnson	Todd Chalk	CIPP - CA	2/17/2017	$3,448,392.00	100%	2894	84
16056.00	**Davis, CA 15" Sewer, The Villages at Willow Creek**	Terry Jue, City of Davis P 530.757.5686 tjue@cityofdavis.org	23 Russell Blvd., Suite 3 Davis, CA 95616	Andrew Johnson	Todd Chalk	CIPP - CA	6/23/2016	$43,464.00	100%	359	15: 359
16057.00	**Caltrans, CA Pipeline Rehab Services Contract #65A0588**	Azzeddine Benouar, California Department of Transportation P 916.654.3968 azzeddine.benouar@dot.ca.gov	1727 30th St. Sacramento, CA 95816	Jarmann Frazer	Todd Chalk	CIPP - CA	8/26/2016	$78,500.00	100%	100	18: 100
16058.00	**Hiawatha, KS Sanitary Sewer Rehab, Phase II**	Alan Blough, Sub to Nowak Construction Company P 316.794.8898 alan@nowakconstruction.com	200 S. Goddard Road Goddard, KS 67052	Danny Brown	Randy Mather	CIPP - KS	1/30/2017	$148,773.05	100%	4884	8: 4478, 10: 406
16059.00	**Las Vegas, NV 713-Las Vegas Valley Manhole and Pipe Rehabilitation - Package 8**	Jake Marshall, Sub to Las Vegas Paving Corp. 702. 251.5800 jake.marshall@lvpaving.com	4420 South Decatur Blvd. Las Vegas, NV 89103	James Bower	Brian Ackerman	CIPP - NV	2/5/2017	$255,777.50	100%	2117	8: 918, 10: 1199
16060.00	**Madera, CA Schnoor Ave Pipeline Rehab**	Ellen Bitter, City of Madera P 559.661.5472 ebitter@cityofmadera.com	205 W. Fourth St. Madera, CA 93637	Andrew Johnson	Todd Chalk	CIPP - CA	8/30/2016	$845,927.43	100%	1581	24, 30, 42
16061.00	**Moline, IL 2016 Sanitary Sewer Lining, Project #1250**	Darrel Preston, City of Moline 309.524.2355 dpreston@moline.il.us	Dept of Public Works 3635 4th Avenue Moline, IL 61265	Jeff Hirtz	Dan Swidrak	CIPP - IL	12/29/2016	$92,897.00	100%	3023	8: 1199, 10: 1191, 12: 633
16062.00	**Shawnee, KS Quivira Rd Rehab, 3410**	Roger Vossman, Sub to McAnany Construction P 913.927.6663 rogerv@mcananyconstruction.com	15320 Midland Dr. Shawnee, KS 66217	Danny Brown	Randy Mather	CIPP - KS	3/27/2017	$23,300.00	100%	327	15: 293, 18: 34
16063.00	**Lawrence, KS KU Memorial Drive**	David Kissick, Sub to Kissick Construction Co., Inc. P 816.363.5530 dkissick@kissickco.com	8131 Indiana Ave. Kansas City, MO 64132	Danny Brown	Randy Mather	CIPP - KS	6/15/2016	$13,500.00	100%	182	8: 182
16064.00	**Fresno, CA F St & Santa Clara St. Project I.D. RC00162**	Bill Herr, City of Fresno P 559.621.5614 bill.herr@fresno.gov	1721 Van Ness Avenue Fresno, CA 93721	Jarmann Frazer	Todd Chalk	CIPP - CA	12/9/2016	$211,987.60	100%	935	18: 935
16065.00	**Newton, KS Millennium Machine**	Kris Wondra, Sub to Millennium Machine and Tool, Inc. P 316.282.0884 krisw@mmtinc.net	9801 West York St. Wichita, KS 67215	Danny Brown	Randy Mather	CIPP - KS	8/30/2016	$14,870.00	100%	220	8: 220
16066.00	**Fresno, CA RC00161, E Church Ave.**	Bill Herr, City of Fresno P 559.621.5614 bill.herr@fresno.gov	1721 Van Ness Avenue Fresno, CA 93721	Jarmann Frazer	Todd Chalk	CIPP - CA	6/16/2017	$1,689,854.39	100%	5320	30: 5320
16067.00	**Roseville CA S1705203, Marilyn & Bernice Alley**	Geroge Hanson, City of Roseville P 916.746.1764 ghanson@roseville.ca.us	2005 Hilltop Circle Roseville, CA 95747	Jarmann Frazer	Todd Chalk	CIPP - CA	7/29/2016	$18,500.00	100%	120	6: 120
16068.00	**Lenexa, KS Lichtenauer CMP Repair**	Matt Gripka, Sub to Kansas Heavy Construction, LLC 913.845.2121 mattgripka@kshvycon.com	19425 State Avenue Tonganoxie, KS 66086	Danny Brown	Randy Mather	CIPP - KS	1/23/2017	$130,187.00	100%	741	15, 42, 48
16069.00	**Moraga, CA Full Depth Reclamation Project, Project No. 08-106**	Caherine LaChapelle, Sub to Bay Cities Paving & Grading, Inc. P 925.446.6004 catl@baycities.us	1450 Civic Ct., Bldg. # 400 Concord, CA 94520	Jarmann Frazer	Todd Chalk	CIPP - CA	8/3/2016	$37,552.00	100%	112	24: 112
16070.00	**Tonopah, NV US 6 Junction - US 95 West of Millers Park NDOT Contract #3628 Project #S1-006-1 (034) & NHP-006-1 (035)**	Robert Nelson, Sub to Fisher Sand & Gravel Co. P 702.929.3157 rneLump Sumon@fisherind.com	1302 W. Drivers Way Tempe, AZ 85284	Andrew Johnson	Todd Chalk	CIPP - NV	11/24/2016	$1,419,232.00	100%	9473	18: 781, 24: 5161, 30: 2523, 36: 1008
16071.00	**San Francisco, CA WW-622 Haight-Ashbury/Tenderloin/Diamond Heights Districts Sewer Replacement and Pavement Renovation**	Mike Hilz, Sub to Hernandez Engineering P 415.824.4731 mike@hernandez-engineering.com	850 Rankin St. San Francisco, CA 94124	Jarmann Frazer	Todd Chalk	CIPP - CA	6/14/2017	$479,914.00	100%	1613	12, 15, 18, 3' x 5'

SAK Construction Completed Project List

VP Job #	Project Name	Owner's Contact Information	Address	Superintendent	Project Manager	Type	Completed Date	Completed Amount	Percent Complete	Footage Complete	Diameters
16072.00	**San Antonio, TX** **15-4510 & 15-4512, C 13 Broadway**	Nathaniel Virdell, San Antonio Water System 210-233-3135, nathaniel.virdell@saws.org	2800 U.S. Hwy 281 North San Antonio, TX 78212	Jarmann Frazer	Brian Ackerman	CIPP - TX	5/31/2017	$4,472,546.34	100%	11937	24: 885, 26: 1583, 27: 1213, 33: 3895, 36: 207, 39: 1049
16073.00	**St. Louis, MO (MSD)** **Lemay, Watershed Public I/I Removeal - North Hampton Creek (Contract #20416**	Steve Welnick, Metropolitan STL Sewer District P 314.768.6378 swelnick@stlmsd.com	2350 Market Street St. Louis, MO 63101	Matt Hirtz / John Price	Travis Jerrels	CIPP - MO	9/30/2020	$2,658,110.84	100%	44850	8, 10, 12, 15, 18, 21, 24, 60
16074.00	**Decatur, IL** **2016 Trenchless Long Lining Repairs, City Project 2016-28**	Darrel Preston, City of Moline 309.524.2355 dpreston@moline.il.us	#1 Gary K Anderson Plaza Decatur, IL 62523	Jeff Hirtz	Dan Swidrak	CIPP - IL	11/30/2016	$448,012.10	100%	16654	8: 14005, 10: 1824, 12: 525, 18: 300
16075.00	**Godfrey, IL** **Phillips 66 Wood River Refinery**	Sam Walter, Sub to Widman Construction P 618.225.3675 sam.walter@widmanconstruction.com	P66 Wood River Refinery 27199 State Highway 3 Godfrey, IL 62033	Matt Hirtz	Nick Pryor	CIPP - IL	10/30/2016	$272,475.00	100%	500	24: 500
16076.00	**Caltrans, CA** **Caltrans Minor B Contract #02A1541 Cedar Pass CIPP Liners and Culvert Rehab**	Joseph Frank, Sub to Robert J. Frank Construction, Inc. P 530.222.1408 robertjfrankconstruction@hotmail.com	2806 Tarmac Rd. Redding, CA 96003	Andrew Johnson	Todd Chalk	CIPP - CA	8/25/2016	$72,360.00	100%	270	24: 270
16077.00	**Caltrans, CA** **03-iH7204, Doug Veerkamp, 16-P21, Hwy 49**	Matt Veerkamp, Sub to Doug Veerkamp P 530.676.0825 matt.veerkamp@dougveerkamp.com	2585 Cold Springs Road Placerville, CA 95667	Jarmann Frazer	Todd Chalk	CIPP - CA	8/26/2016	$85,300.00	100%	561	30: 561
16078.00	**Knoxville, TN** **16-1939, KUB 2nd Creek**	Jane Warren, Sub to A & W Maintenance, Inc. Subsidiary of Warren Environmental P 508.947.8539 jane@warrenenviro.com	137 Pine Street Middleborough, MA 02346	Glenn Spears	Deborah Bartley	CIPP - TN	8/17/2016	$132,600.00	100%	300	36: 300
16079.00	**Nashville, TN** **Cowan Riverside Rehabilitation - Area 4 Pages Branch**	Greg Ballard, The Metro Gov of Nashville & Davidson County P 615.862.4922 greg.ballard@nashville.gov	800 2nd Ave. S. Nashville, TN 37210	Glenn Spears	Deborah Bartley	CIPP - TN	1/3/2018	$5,863,000.00	100%	44664	8: 32139, 10: 2081, 12: 1717, 15: 1308, 18: 2135, 21: 1653, 30: 3631
16080.00	**Richmond, MO Sanitary Sewer Lining 2016**	Dale Ship, The City of Richmond P 816.776.5304 dshipp@cityofrichmondmo.org	205 Summit Street Richmond, MO 64085	Danny Brown	Randy Mather	CIPP - MO	1/30/2017	$129,538.07	100%	4072	8: 4072
16081.00	**Chattanooga, TN** **Carter Street CSOTF Outfall Sewer Rehabilitation Contract No. W-09-015-201**	Dennis Malone, City of Chattanooga P 423.643.7230 dmalone@chattanooga.gov	Department of Public Works 1250 Market Street Chattanooga, TN 37402	Glenn Spears	Deborah Bartley	CIPP - TN	12/31/2016	$327,829.32	100%	302	24: 302
16082.00	**Lake Worth, FL** **Tropical Drive and Barton Road Infrastructure Improvements**	Stephen Decker, Sub to B & B Underground Construction P 561-249-0341 sdecker@bbuconst.com	4050 Westgate Avenue Suite 110 West Palm Beach, FL 33409	Angie Miller	Randy Hansbrough	CIPP - FL	11/2/2016	$121,620.80	100%	4736	8, 9.5
16083.00	**San Francisco, CA Specification 2489J** **Various Locations Pavement Renovation and Sewer Replacement**	Stephen Harty, Sub to Harty Pipelines P 415.585.6023 harty.stephen@yahoo.com	4085 19th Avenue San Francisco, CA 94132	Jarmann Frazer	Todd Chalk	CIPP - CA	9/14/2016	$32,900.00	100%	126	12: 126
16085.00	**Belleville, IL Misc. Sanitary Sewer**	Ron Stuckel, St. Clair Township 618.234.8898 ron.stuckel@kdginc.com	15 East Washington Belleville, IL 62220	Jeff Hirtz	Dan Swidrak	CIPP - IL	11/29/2016	$77,875.00	100%	3115	8: 3115
16086.00	**Lakeland, FL** **24" CIPP Lining Griffin Road (MH60083-60082), Televise (MH 60082-60081)371298.00**	Kim Goldener, City of Lakeland 863-838-6074 Kim.Goldener@lakelandgov.net	City Hall 228 South Massachusetts Ave Lakeland, FL 33801	Angie Miller	Randy Hansbrough	CIPP - FL	9/19/2016	$88,354.50	100%	325	24: 325
16087.00	**St. Louis, MO Steins Street 119**	Mark Dietiker, Metropolitan St. Louis Sewer District P 314.768.6380 mdietker@stlmsd.com	2360 Market St. St. Louis, MO 63103	Jason Laney	Travis Jerrels	CIPP - MO	12/1/2016	$354,667.22	100%	386	57
16088.00	**Geneva, IL** **2016 Sanitary Sewer Lining**	Bob Van Gyseghem, City of Geneva 630.232.1551 bvangyseghem@geneva.il.us	1800 South Street Geneva, IL 60134	Jeff Hirtz	Dan Swidrak	CIPP - IL	12/15/2016	$211,161.00	100%	4676	8: 3018, 12: 78, 15: 390, 24: 1190
16089.00	**St. Charles, IL** **2016 Sewer Lining Project**	Tim WiLump Sumon, City of St. Charles P 630.377.4405 twiLump Sumon@stcharlesil.gov	Two East Main Street St. Charles, IL 60174	Jeff Hirtz	Dan Swidrak	CIPP - IL	11/18/2016	$426,670.00	100%	4387	12: 132, 18: 349, 21: 1366, 24: 58, 27: 2482
16090.00	**Batavia, IL** **2016 Sewer Lining Project**	Tim Grimm, City of Batavia 630.454.2750 tgrimm@cityofbatavia.net	200 N Raddant Rd. Batavia, IL 60510	Jeff Hirtz	Dan Swidrak	CIPP - IL	11/28/2016	$192,638.00	100%	5068	8: 598, 10: 1182, 12: 2905, 15: 383
16091.00	**O'Fallon, MO** **Cinnamon Teal Dr. Storm Water Lining**	Ben Von Harz, City of O'Fallon P 636-379-5513 bvonharz@ofallon.mo.us	100 North Main Street O'Fallon, MO 63366	Matt Hirtz	Tim Bussen	CIPP - MO	11/21/2016	$27,884.00	100%	194	30: 194
16092.00	**Caltrans, CA Caltrans Contract #10A1769**	Joseph Frank, Sub to Robert J. Frank Construction, Inc. P 530.222.1408 robertjfrankconstruction@hotmail.com	2806 Tarmac Rd. Redding, CA 96003	Jarmann Frazer	Todd Chalk	CIPP - CA	9/26/2017	$39,250.00	100%	103	18: 56, 24: 47
16093.00	**Shawnee, KS** **Lakecrest Drive & Johnson Drive Emergency Pipe Repair**	Cynthia Moeller-Krass, City of Shawnee P 913. 742.6236 cmoeller-krass@ci.shawne.ks.us	11110 Johnson Drive Shawnee, KS 66203	Danny Brown	Randy Mather	CIPP - KS	11/28/2016	$101,510.75	100%	130	54
16094.00	**Buffalo Grove, IL 2016 Sewer Lining, Phae 2**	Kyle Johnson, Village of Buffalo Grove 847.459.2523 kjohnson@vbg.org	50 Raupp Blvd. Buffalo Grove, IL 60089	Jeff Hirtz	Dan Swidrak	CIPP - IL	11/16/2016	$216,416.25	100%	6931	8: 4733, 10: 344, 12: 988, 15: 866
16095.00	**Bonner Springs, KS Wastewater CIPP 2016**	Ron Wyatt, City of Bonner Springs P 913. 422.8117 bonnerwater@bonnersprings.org	PO Box 38 205 East Second St. Bonner Springs, KS 66012	Danny Brown	Randy Mather	CIPP - KS	2/17/2017	$60,527.70	100%	2658	8: 2658
16096.00	**New London, MO** **Sewer System Improvements Contract 1: Sewer Main Lining and Grouting**	Mark Bross, City of New London 573.221.0020 mcb@klingner.com	419 S Main St. New London, MO 63459	Jeff Hirtz	Nick Pryor	CIPP - MO	11/1/2017	$1,018,504.00	100%	30766	8: 28608, 10: 2158
16097.00	**Fox Lake, IL** **2016 Sanitary Sewer Cleaning & Lining**	Aaron Berry, Village of Fox Lake 630.587.0470 a.berry@taiengr.com	66 Thillen Dr. Village of Fox Lake, IL 60020	Jeff Hirtz	Dan Swidrak	CIPP - IL	11/28/2016	$82,737.50	100%	2835	8: 2835
16098.01	**Hilton Head, SC** **Sewer Rehabilitation Change Order**	Mike Fleury, South Island Public Service District 702.271.7630 mfleury@carollo.com	2 Genesta St. Hilton Head Island, SC 29928	Angie Miller	Stan Krause	CIPP - SC	2/12/2019	$692,864.00	100%	8273	8: 6545, 12: 1728
16099.00	**Plant City, FL Cured-In-Place Pipe Lining**	Mark Dalmau, Sub to BLD Services, LLC P 305.746.2950 markd@bldllc.net	2424 Tyler Street Kenner, LA 70062	Angie Miller	Randy Hansbrough	CIPP - FL	12/15/2017	$490,932.00	100%	20212	8: 18736, 12: 627, 24: 849
16100.01	**Bolivar, MO Sewer Rehab, 2018**	Jerry Hamby, City of Boliver P 417.327.2494 jhamby@bolivar.mo.us	345 S. Main Ave. Bolivar, MO 65613	Danny Brown	Nick Pryor	CIPP - MO	1/16/2019	$131,307.00	100%	5709	8: 5709

SAK Construction Completed Project List

VP Job #	Project Name	Owner's Contact Information	Address	Superintendent	Project Manager	Type	Completed Date	Completed Amount	Percent Complete	Footage Complete	Diameters
16101.00	**Charleston, WV** **Contract #1 - Point Lick and Coal Fork SS Inflow and Infiltration Remediation**	Jesse Alden, Thrasher Engineering P 304.343.7601 jalden@thrashereng.com	100 PSD Drive Charleston, WV 25306	Chad Rusher	Bob Quackenbush	CIPP - WV	9/30/2018	$437,580.00	100%	11767	8: 11767
16102.00	**Caltrans, CA** **Hwy 1 Buena Vista Drainage Caltrans #05-1H7004**	Anthony Torres, Sub to Granite Construction P 831.750.0421 anthony.torres@gcinc.com	715 Comstock Street Santa Clara, CA 95054	James Bower	Todd Chalk	CIPP - CA	10/25/2016	$388,638.79	100%	1517	18: 150, 30: 442, 36: 925
16103.00	**Daly City, CA** **Rehab of 27" Final Effluent Force Main**	Tom Piccolotti, City of Daly City P 650.872.9019 tpiccolotti@dalycity.org	Dept of Water and Wastewater Resources 153 Lake Merced Blvd. Daly City, CA 94015	Jarmann Frazer	Todd Chalk	CIPP - CA	11/8/2016	$379,000.00	100%	720	27: 720
16104.00	**Pinellas Park, FL** **Renewal 4, Contract 13/014, 2017 Annual**	Dave Floyd, City of Pinellas Park P 727.369.5623 dfloyd@pinellas-park.com	8000 60th Street North Pinellas Park, FL 33781	Angie Miller	Stan Krause	CIPP - FL	4/16/2018	$549,994.45	100%	18777	8: 18499, 10: 278
16105.00	**Mt. Juliet, TN** **Royal Oaks Area Sewer Rehabilitation Project for the City of Mt. Juliet, TN**	David Ward, Sub to SBW Constructors LLC 865-306-2788 dward@sbwconstructors.com	107 Terry Lane Cottontown, TN 37048	Brian Harmon	Deborah Bartley	CIPP - TN	3/13/2018	$214,257.80	100%	6264	8: 6264
16106.00	**Hartford, CT** **Rehabilitation of the Rocky Hill Outfall and Rocky Hill Interceptor Contract Number 2016B-04**	Thomas Robbins, PE, The Metropolitan District 860.278.7580 x 3381 trobbins@themdc.com	555 Main Street Hartford, CT 06103	Bill Seibert	Matthew Rhoads	CIPP - CT	11/1/2018	$3,586,355.53	100%	6227	36: 3360, 39: 2867
16107.00	**Mobile, AL** **2016 Small Diameter Gravity Sewer Cured-In-Place Pipe Project** **MAWSS Project No. C100316.22**	Elliot White, Constantine Engr. P 251.648.8655 ewhite@tcgeng.com	60 Springdale Blvd, Ste B Mobile, AL 36606	Angie Miller	Randy Hansbrough	CIPP - AL	2/1/2018	$2,035,552.50	100%	76835	8: 67999, 10: 6866, 12: 701, 15: 1269
16109.00	**St. Peters, MO** **Mid Rivers Mall Drive Right Turn Lane Improvements**	Ryan Lazier, Sub to Gershenson Construction P 636-549-0199 rlazier@gershenson.com	2 Truitt Drive Eureka, MO 63025	Matt Hirtz	Travis Jerrels	CIPP - MO	3/2/2018	$31,004.00	100%	358	12: 358
16110.00	**Jacksonville, IL** **Town Brook at Westown Ford and Delaney Drive - Western Knoll Subdivision Sanitary Sewer Lining**	Contact Name, City of Jacksonville 217-245-4146 msorrill@bentonassociates.com	200 West Douglas Avenue Jacksonville, IL 62650	Jeff Hirtz	Dan Swidrak	CIPP - IL	11/22/2016	$32,125.00	100%	515	8: 325, 15: 190
16111.00	**Oakley, CA** **Bethel Island Road Culvert Rehabilitation Project**	Kevin Coggins, City of Oakley P 925.625.7155 Coggins@ci.oakley.ca.us	3231 Main Street Oakley, CA 94561	Andrew Johnson	Todd Chalk	CIPP - CA	9/27/2018	$59,600.00	100%	60	48
16112.00	**St. Louis, MO (MSD)** **Lemay Public, I/I Reduction (2017) - Contract C (12050-015.1) Contract #20432**	Steve Welnick, Metropolitan STL Sewer District P 314.768.6378 swelnick@stlmsd.com	2350 Market Street St. Louis, MO 63101	Matt Hirtz / John Price	Travis Jerrels	CIPP - MO	10/3/2018	$1,969,247.71	100%	25122	8", 10" 12", 15", 18", 21", 24", 27", 30", 42"
16113.00	**Fairfax, VA** **Sewer Lines & MH Rehab,** **Contract Number: 4400007258**	Scwan Fatah, County of Fairfax P 571.221.6499 shwan.fatah@fairfaxcounty.gov	Depart of Procurement & Material Mgt 12000 Government Center Pkwy, Ste 427 Fairfax, VA 22035-0013	Chad Rusher	Bob Quackenbush	CIPP - VA	9/1/2017	$2,773,347.86	100%	2932	36, 42, 48, 60
16114.00	**Chesterfield, VA** **Ashton Creek, Johnson Creek & Beechwood Sewer Rehabilitation - Contract 16-1506**	Matthew Easterbrook, County of Chesterfield P 804.768.7483 EasterbrookM@chesterfield.gov	9901 Lori Road Chesterfield, VA 23832-0001	Chad Rusher	Bob Quackenbush	CIPP - VA	12/7/2017	$1,341,968.60	100%	3805	8, 18, 36, 42, 48, 60, 72, 96
16115.00	**Kirkwood, MO (MSD)** **11213 Austin Place & Lockwood Ave Storm Sewer, Project No. 11213-015.1**	Contact Name, Sub to Unnerstall Contracting Co. P Contact Phone Number Contact Email	2803 W. Osage Pacific Pacific, MO 63069	Matt Hirtz	Tim Bussen	CIPP - MO	3/3/2017	$26,417.00	100%	187	24: 187
16116.00	**San Jose, CA** **Public Works GEC for Sewer Repairs 2013-2015 (Contract III)**	Adrian Power, Sub to JMB Construction P 650.267.5300 apower@jmbconstruction.com	132 South Maple Ave. South San Francisco, CA 94080	Jarmann Frazer	Todd Chalk	CIPP - CA	12/12/2016	$70,280.00	100%	130	30: 130
16117.00	**St. Louis, MO (MSD)** **Sherwyn Sanitary Relief and I/I Reduction**	Mike Cracchiolo, Sub to Fred M. Luth & Sons, Inc. P 314.771.3892 mcracchiolo@fredmluth.com	4516 McRee Avenue St. Louis, MO 63110	Matt Hirtz	Travis Jerrels	CIPP - MO	7/26/2017	$24,812.50	100%	350	6: 120, 8: 230
16119.00	**St. Louis, MO (MSD)** **Lemay Public, A, 20461, 12048-015.1**	Steve Welnick, Metropolitan STL Sewer District P 314.768.6378 swelnick@stlmsd.com	2350 Market St. St. Louis, MO 63103	Matt Hirtz	Travis Jerrels	CIPP - MO	5/20/2019	$2,046,948.15	100%	29126	6: 325, 8: 23925, 10: 3545, 12: 765, 15: 449, 30: 117
16120.00	**Eminence, MO Sewer Improvements**	Rachel Eyrtel, Sub to Donald Maggi Inc. P 573.364.7733 maggiconst@gmail.com	204 South Main Street Eminence, MO 65466	Jeff Hirtz	Nick Pryor	CIPP - MO	5/31/2017	$57,435.00	100%	1485	8: 1284, 10: 201
16122.00	**Montgomery, IL** **Pearl Street Storm Sewer Rehab**	Timothy Paulson, Village of Montgomery P 630.466.6700 tpauLump Sumon@eeiweb.com	200 N. River St. Montgomery, IL 60538	Jeff Hirtz	Dan Swidrak	CIPP - IL	6/20/2017	$131,814.00	100%	1294	24: 1294
16123.00	**Tempe, AZ** **MCR II Utility Relocation (4605)**	Joel Simpson, Sub to Sundt Construction, Inc. 480.293.3220 jLump Sumimpson@sundt.com	2620 S 55th St. Tempe, AZ 85282	Gary Rodgers	David Burbank	CIPP - AZ	12/29/2016	$70,850.00	100%	545	24: 545
16124.00	**San Jose, CA** **Alamitos Ponds, Santa Clara Valley**	Jerry Sparkman, Santa Clara Valley Water District P 408.630.3254 jsparkman@valleywater.org	5750 Almaden Expressway San Jose, CA 95118	Jarmann Frazer	Todd Chalk	CIPP - CA	4/12/2017	$69,100.00	100%	135	30: 125
16125.01	**Lake St. Louis, MO** **Lake St. Louis Sewer Improvement Program- Contract 2**	David Mather, PWSD #2 P 636.561.3737 Ext 112 dmather@waterdistrict2.com	100 Water Dr. O'Fallon, MO 63366	Alan Stuhlsatz	Tom Qualls	CIPP - MO	4/13/2019	$12,365.00	100%	70	8: 70
16126.00	**Clive, IA** **2016/17 Sanitary Sewer Lining Program**	Jeff May, City of Clive P 515.223.6231 jmay@cityofclive.com	2123 NW 111th St. 515.223.6231 Clive, IA 50325-3755	Danny Brown	Randy Mather	CIPP - IA	4/17/2017	$94,382.51	100%	4610	8: 4610
16127.00	**Kansas City, MO Middle Blue Phase**	John Dougherty, Sub to Kissick Construction Co., Inc. P 816.363.5530 jdougherty@kissickco.com	8131 Indiana Ave. Kansas City, MO 64132	Danny Brown	Randy Mather	CIPP - MO	4/15/2019	$398,454.75	100%	8631	8: 1849, 10: 2429, 12: 157, 15: 2222, 18: 1765, 21: 209
16128.00	**San Antonio, TX Castroville Rd 48" DR144**	Carmen Groth, San Antonio Water System P 210.233.3619 Carmen.Groth@saws.org	2800 U.S. Hwy 281 North San Antonio, TX 78212	James Bower	Brian Ackerman	CIPP - TX	7/16/2017	$2,429,780.64	100%	3830	24, 30, 42, 48
16129.00	**St. Louis, MO** **Ladue High School - Sewer Lining**	Contact Name, Sub to Castle Contracting P Contact Phone Number Contact Email	345 Marshall Avenue Suite 302 Webster Groves, MO 63119	Matt Hirtz	Tim Bussen	CIPP - MO	12/3/2016	$20,442.50	100%	100	18: 100

SAK Construction Completed Project List

VP Job #	Project Name	Owner's Contact Information	Address	Superintendent	Project Manager	Type	Completed Date	Completed Amount	Percent Complete	Footage Complete	Diameters
16130.00	**Asheville, NC South French Broad Interceptor - Lining, Project No. 2011033**	Michael Schraven, Metropolitan Sewerage District of Buncombe County, NC P 828.225.8288 mschraven@msdbc.org	2028 Riverside Dr. Asheville, NC 28814	Glen Spears	Randy Hansbrough	CIPP - NC	3/29/2017	$585,108.00	100%	3362	36: 3362
16131.00	**San Ramon, CA Crow Canyon Rd. 36" Storm Drain Rehabilitation**	Chris Dietrich, Sub to Garney Companies P 925.800.1848 cdietrich@garney.com	1333 NW Vivion Road Kansas City, MO 64118	Jarmann Frazer	Todd Chalk	CIPP - CA	12/21/2016	$100,000.00	100%	150	36: 150
16132.00	**Clarkdale, AZ VW Bug Blvd to WWTP Sewer CIPP Relining Project**	Wayne Debrosky, Town of Clarkdale 928.639.2525 wayne.debrosky@clarkdale.az.gov	P.O. Box 308 Clarkdale, AZ 86324	James Bower	David Burbank	CIPP - AZ	2/10/2017	$159,712.00	100%	1736	12: 1736
16133.00	**San Carlos, CA Sewer Capacity Assurance Improvements - Phase 4**	Eugene Carew, Sub to Bay Pacific Pipelines, Inc. P 415.897.6958 baypacpipelines@yahoo.com	600 Elm St. San Carlos, CA 94070	Jarmann Frazer	Todd Chalk	CIPP - CA	4/30/2017	$163,610.00	100%	798	27: 798
16134.00	**Modesto, CA Highline Pipeline Rehab**	Seylin Savy, Modesto Irrigation District P 209.557.1351 seylin.savy@mid.org	1231 11th St. Modesto, CA 95354	Jarmann Frazer	Todd Chalk	CIPP - CA	11/30/2017	$206,848.00	100%	721	30: 366, 36: 355
16135.00	**Byron, CA CIPP In 16" & 18" Diameter Irrigation Pipes**	Rick Gilmore, Byron-Bethany Irrigation District P 209.835.0375 r.gilmore@bbid.org	7995 Bruns Rd. Byron, CA 94514-1625	Andrew Johnson	Todd Chalk	CIPP - CA	12/19/2016	$196,447.00	100%	1645	16: 345, 18: 1300
16136.00	**Fenton, MO 141 & Romaine Creek Rd. Lining**	Tom Sampson, Northeast Public Sewer District P 636.343.5090 toms@northeastsewer.org	1041 Gravois Road, Fenton MO 63026	Jeff Hirtz	Dan Swidrak	CIPP - MO	7/5/2017	$210,678.50	100%	2334	18: 2334
16137.00	**Overland Park, KS Discount Tire CIPP Lining of Sanitary Sewer**	Rick Kraszewski, Sub to DZI Construction Services, Inc. P 248.241.6670 rickk@dzicontruction.com	9675 Northwest Court Clarkston, MI 48346	Danny Brown	Randy Mather	CIPP - KS	5/24/2017	$16,550.00	100%	370	8: 370
16138.00	**Milpitas, CA 577-16-01, California Circle**	Tim David, Sub to Sanco Pipelines, Inc. P 408.559.2764 timdavid@sancopipelines.com	727 University Ave. Los Gatos, CA 95032	Andrew Johnson	Todd Chalk	CIPP - CA	8/25/2017	$320,850.00	100%	804	42
16139.00	**San Antonio, TX C13 Broadway Corridor Project Sewer Rehabilitation Package 2.C and 4.C**	Nathan Virdell, San Antonio Water System P 210.233.3135 Nathaniel.virdell@saws.org	2800 U.S. Hwy 281 North San Antonio, TX 78298-2449	James Bower	Brian Ackerman	CIPP - TX	11/7/2017	$1,803,488.84	100%	6825	18: 2672, 24: 2630, 33: 1523
16141.00	**Washington, DC Watts Branch Sewer Rehabilitation Phase 3 - IFB# 150200**	Willis Thomas, District of Columbia Water and Sewer Authority P Contact Phone Number willis.thomas@dcwater.com	5000 Overlook Ave., SW Washington, DC 20032	Chad Rusher	Bob Quackenbush	CIPP - DC	3/13/2018	$3,182,796.74	100%	8810	10: 1785, 12: 508, 16: 33, 18: 1866, 21: 111, 24: 2944, 27: 1563
16142.00	**Kirksville, MO Blanton-Nason-Brewer Sanitary Sewer Pipe Liner Project**	Karl Schneider, Truman State University P 660.785.4203 Contact Email	100 East Normal Kirksville, MO 63501	Danny Brown	Randy Mather	CIPP - MO	4/17/2017	$18,490.00	100%	260	8: 260
16143.00	**WSSC, MD Western Branch Task Order #14**	Randy Bond, P 301-206-7317 EXT. 2425 ralph.bond@wsscwater.com	5389 Enterprise St. Suite F Eldersburg, MD 21784	Chad Rusher	Bob Quackenbush	CIPP - MD	10/21/2016	$51,678.00	100%	356	24: 356
16145.00	**St. Louis, MO (MSD) Bissell-Coldwater-Missouri-Meramec Public I/I Reduction (2017) Contract C (12025-015.1) Contract #20471**	Steve Welnick, Metropolitan STL Sewer District P 314.768.6378 swelnick@stlmsd.com	2350 Market Street St. Louis, MO 63101	Matt Hirtz / John Price	Travis Jerrels	CIPP - MO	6/8/2020	$1,482,476.42	100%	18380	8, 27, 30, 36, 48
16146.00	**Reno, NV 2016 Sewer Rehab-Phase II**	Jon Simpson, City of Reno P 775.689.2961 simpsonj@reno.gov	1 East 1st St 8th Floor Reno, NV 89505	Andrew Johnson	Todd Chalk	CIPP - NV	9/18/2018	$7,706,729.38	100%	93776	8: 66386, 10: 5400, 12: 4802, 15: 4456, 18: 4469, 24: 3615, 36: 4648
16147.00	**Pittsburgh, KS Sanitary Sewer Rehab 2016, Hobson Addition**	Matt Bacon, City of Pittsburg, KS P 620.240.5138 matt.bacon@PITTKS.ORG	201 W. 4th St. Pittsburg, KS 66762	Danny Brown	Randy Mather	CIPP - KS	10/13/2017	$303,018.50	100%	5314	8: 1885, 24: 3429
16149.00	**Shreveport, LA Cedar Grove Basin Sewer Rehab 3**	David Smith, City of Shreveport 318.673.6050 david.smith@shreveportla.gov (No Reference)	505 Travis Street - Suite 610 Shreveport, LA 71101	Jeff Hirtz	Dan Swidrak	CIPP - LA	1/24/2020	$7,902,272.11	100%	72606	6: 348, 8: 59018, 10: 5104, 12: 7398, 18: 738
16150.00	**WelLump Sumville, MO SKW1140337-010**	Chris Locher Sub to KJ Unnerstall Construction Company P 636.239.2028 chris@kjuinc.com	4923 South Point Rd. Washington, MO 63090	Jeff Hirtz	Travis Jerrels	CIPP - MO	7/17/2017	$86,648.75	100%	1646	8: 1646
16151.00	**Omaha, NE Omaha Airport Authority, Eppley Pipe Repair**	Trevor Tonniges, Omaha Airport Authority P 402.661.8018 Trevor.Tonniges@FlyOMA.com	4501 Abbott Drive, Suite 2300 Eppley Airfield Omaha, NE 68110	Danny Brown	Randy Mather	CIPP - NE	2/28/2017	$34,875.00	100%	70	18: 70
16152.00	**Kansas City, MO Savoy Hotel**	Ronnie McGarrah, Sub to Rodriguez Mechanical Contractors P 913.281.1814 ronnie@rmckc.com	541 South 11th Street Kansas City, MO 66105	Danny Brown	Randy Mather	CIPP - MO	5/3/2018	$17,500.00	100%	190	8: 190
17002.00	**Asheville, NC South French Broad Interceptor - Lining, Project No. 2011033**	Michael Schraven, Metro Sewerage Dist of Buncombe County 828-225-8288 mschraven@msdbc.org	2028 Riverside Dr. Asheville, NC 28814	Glenn Spears	Randy Hansbrough	CIPP - NC	3/29/2017	$494,127.00	100%	2833	36: 2833
17003.00	**Udall, KS Water Distribution Phase III**	Jeff Murphy, Sub to Nowak Construction Company P 316.794.8898 jeff@nowakconstruction.com	200 S. Goddard Road Goddard, KS 67052	Danny Brown	Randy Mather	CIPP - KS	7/14/2017	$20,736.00	100%	384	8: 384
17004.00	**North Las Vegas, NV 1507 - Sewer Main Rehabilitation Phase 2**	Jake Marshall, Sub to Las Vegas Paving Corp. P 702.251.5800 jake.marshall@lvpaving.com	4420 South Decatur Blvd. Las Vegas, NV 89103	James Bower	Brian Ackerman	CIPP - NV	2/24/2017	$172,172.00	100%	1996	10: 1996
17005.00	**Mesa, AZ Wastewater Collection System**	John Norton, Sub to B & F Contracting, Inc. P 623.217.7763 jnorton@bfcontracting.com	11011 N. 23rd Ave. Phoenix, AZ 85029	Gary Rodgers	David Burbank	CIPP - AZ	6/20/2017	$19,000.00	100%	230	10: 230
17006.00	**Decatur, IL 7th Ward Sewer Rehabilitation City Project 2015-07**	Paul Caswell, City of Decatur P 217.424.2747 pcaswell@decaturil.gov	1 Gary K Anderson Plaza Decatur, IL 62523-1196	Jason Laney/ Jeff Oberhofer/ Glenn Spears	Dan Swidrak	CIPP - IL	3/15/2018	$7,675,591.93	100%	23288	18, 20, 21, 30, 34, 37, 38, 39, 40, 42, 44, 45, 46, 48, 50, 52, 54, 56, 57, 58, 60, 66, 72, 84
17008.00	**Kingsport, TN 2017 Emergency Work**	Tom Skelton, Sub to Eastman Chemical 423-229-1862 tskelton@eastman.com	100 N Eastman Rd. Kingsport, TN 37660	Stan Kraus	Randy Hansbrough	CIPP - TN	3/25/2017	$163,000.00	100%	275	8: 235, 12: 40

SAK Construction Completed Project List

VP Job #	Project Name	Owner's Contact Information	Address	Superintendent	Project Manager	Type	Completed Date	Completed Amount	Percent Complete	Footage Complete	Diameters
17009.00	**Jefferson City, MO Basin 13 Sewer Main Rehab**	Eric Seaman, City of Jefferson City P 573.634.6410 eseaman@jeffcitymo.org	320 E McCarty St. Jefferson City, MO 65101	Jeff Hirtz	Nick Pryor	CIPP - MO	3/16/2018	$2,611,470.64	100%	16103	6, 8, 10, 21, 42, 48
17010.00	**Nashville, TN Smith Springs Rehab**	David Ward, Sub to SBW Constructors LLC 865-306-2788 dward@sbwconstructors.com	107 Terry Lane Cottontown, TN 37048	Glenn Spears	Deborah Bartley	CIPP - TN	8/16/2018	$1,261,417.37	100%	26395	8: 13535, 10: 3107, 18: 6075, 24: 3243, 30: 435
17011.00	**St. Louis, MO (MSD) Bissell Coldwater - Missouri Meramec Public I/I Reduction (2017) Contract**	Steve Welnick, Metropolitan STL Sewer District P 314.768.6378 swelnick@stlmsd.com	2350 Market St. St. Louis, MO 63103	Matt Hirtz	Travis Jerrels	CIPP - MO	5/29/2020	$2,608,870.46	100%	51569	6, 8, 10, 12, 15, 18, 21, 36, 42
17012.00	**Los Angeles, CA Joint Outfall F Unit 3C Trunk Sewer**	Charles Hickman, Sub to KEC Engineering P 951.734.3010 Email: charles@kecengineering.com	200 N. Sherman Ave. Corona, CA 92882	James Bower	Leo Calvario	CIPP - CA	3/31/2017	$1,719,961.92	100%	3203	54, 63
17013.00	**St. Louis, MO Woodsmill Sanitary Relief (SKME-020)**	Mike Bates, Sub to Bates Utility Company P 314-575-0311 mtbates@batesutility.net	841 Westwood Industrial Park Dr. Weldon Springs, MO 63304	Matt Hirtz	Travis Jerrels	CIPP - MO	5/8/2017	$57,240.90	100%	1266	10: 865, 12: 401
17015.00	**Montgomery, AL 2017 Siphon Rehabilitation Project #680379**	Jared McLaughling, City of Montgomery, AL P 334.322.9015 Email:	22 Bibb Street Montgomery, AL 36102	Glen Spears	Jimmy Witt	CIPP - AL	1/22/2018	$3,511,418.00	100%	3168	14, 18, 30, 36, 42, 64
17016.01	**Rocklin, CA Allan Ct. Drainage**	Rick Lawrence, City of Rocklin P 916.625.5521 richard.lawrence@rocklin.ca.us	4081 Alvis Court Rocklin, CA 95677	Jarmann Frazer	Todd Chalk	CIPP - CA	6/27/2017	$489,790.00	100%	2253	15, 18, 30, 36, 29x15 ,22x15
17017.00	**Ashdown, AR Emergency Rehab of Domtar Canal Siphon**	Steve Nipper, Southwest Arkansas Water District P 8707737061 Steveswawd@windstream.net	421 Hickory Street Texarkana, AR 71854	Glen Spears	Randy Hansbrough	CIPP - AR	7/15/2017	$1,404,700.00	100%	420	60, 66
17018.00	**Baltimore County, MD Herring Run Sewershed**	Lisa Eicholtz, PE, Baltimore County P 410.887.3781 leicholtz@baltimorecountymd.gov	400 Washington Ave. Towson, MD 21204	Josh Grote	Brandt Childs	CIPP - MD	8/31/2020	$4,106,277.90	100%	77917	8: 73965, 10: 1568, 12: 1453, 15: 930
17019.00	**Anderson, CA CIPP 18" Irrigation Pipe, S Barney Rd.**	Mike Battles, Anderson-Cottonwood Irrigation District P 530.209.1350 mbattlesacid@gmail.com	550 South 79th Street Chandler, AZ 85226	Jarmann Frazer	Todd Chalk	CIPP - CA	4/17/2017	$137,700.00	100%	840	18: 420, 24: 420
17020.00	**Lower Merion, PA 2017 SS Lining**	Joe Danisi, Lower Merion Township Sewer Division P 640.642.0435 jdanisi@lowermerion.org	25 Old Gulph Rd Wynnewood, PA 19096	Josh Grote	Travis Ewing	CIPP - PA	8/11/2017	$209,927.20	100%	4888	8: 4687, 10: 201
17021.00	**St. Louis, MO (MSD) Lemay Public, B, 20487, 12049-015.1**	Steve Welnick, Metropolitan STL Sewer District P 314.768.6378 swelnick@stlmsd.com	2350 Market Street St. Louis, MO 63101	Alan Stuhlsatz	Travis Jerrels	CIPP - MO	11/19/2020	$3,568,935.82	100%	61060	8: 38752, 10: 6667, 12: 4139, 15: 5693, 18: 5413, 24: 366, 30: 30
17022.00	**Masoutah, IL Manhole & Pipe Rehab**	Tom Quirk, City of Mascoutah P 618.566.2964 tquirk@mascoutah.com	3 West Main Street Mascoutah, IL 62258	Jeff Hirtz	Chris Vogt	CIPP - IL	4/2/2017	$114,869.70	100%	974	8: 752, 10: 222
17023.00	**Tucson, AZ Pantano Interceptor (PTI) Craycroft 36" RCP & MH Rehab on Sahuara Ave to Craycroft Rd - Tucson**	Jason DeCarlo, Sub to Achen-Gardner Engineering, LLC P 520.403.4346 jdecarlo@achen.com	550 South 79th Street Chandler, AZ 85226	Gary Rodgers	David Burbank	CIPP - AZ	5/5/2017	$150,800.00	100%	800	36: 800
17024.00	**Manhattan, KS 2017 Sanitary Sewer CIPP**	Norm Francis, City of Manhattan P 785.587.4583 francisn@cityofmhk.com	1101 Poyntz Ave. Manhattan, KS 66502	Danny Brown	Randy Mather	CIPP - KS	10/17/2017	$483,605.00	100%	21932	8: 21932
17025.01	**Indianapolis, IN 92TU00126 White River CCS Phase 3 Rehab**	Shari Foster, Citizens Energy Group P 317.429.3982 sfoster@CitizensEnergyGroup.com	2020 N. Meridian St. Indianapolis, IN 46202	Bill Siebert	Chris Vogt	CIPP - IN	12/29/2017	$1,445,520.27	100%	1498	15, 24, 66, 69
17025.02	**Indianapolis, IN 92RR02608 King Ave/Jackson St. LDSR**	Shari Foster, Citizens Energy Group P 317.429.3982 sfoster@CitizensEnergyGroup.com	2020 N. Meridian St. Indianapolis, IN 46202	Bill Siebert	Chris Vogt	CIPP - IN	12/29/2017	$1,959,956.76	100%	2874	24, 30, 32, 38, 42, 48, 51, 57
17025.04	**Indianapolis, IN 92RR02601 Sutherland Ave. FM Discharge**	Shari Foster, Citizens Energy Group P 317.429.3982 sfoster@CitizensEnergyGroup.com	2020 N. Meridian St. Indianapolis, IN 46202	Bill Siebert	Chris Vogt	CIPP - IN	6/3/2019	$3,778,161.47	100%	1566	42, 48
17025.05	**Indianapolis, IN 92RR02605 West 81st Street**	Shari Foster, Citizens Energy Group P 317.429.3982 sfoster@CitizensEnergyGroup.com	2020 N. Meridian St. Indianapolis, IN 46202	Bill Siebert	Chris Vogt	CIPP - IN	12/29/2017	$169,153.40	100%	1032	15: 1032
17025.06	**Indianapolis, IN 92RR02603 South Kentucky**	Shari Foster, Citizens Energy Group P 317.429.3982 sfoster@CitizensEnergyGroup.com	2020 N. Meridian St. Indianapolis, IN 46202	Bill Siebert	Chris Vogt	CIPP - IN	12/29/2017	$416,460.67	100%	1005	24: 298, 26: 707
17025.07	**Indianapolis, IN 92RR02606, East Raymond St.**	Shari Foster, Citizens Energy Group P 317.429.3982 sfoster@CitizensEnergyGroup.com	2020 N. Meridian St. Indianapolis, IN 46202	Bill Siebert	Chris Vogt	CIPP - IN	12/29/2017	$258,496.75	100%	1355	21: 1355
17025.08	**Indianapolis, IN Southport Rd.**	Shari Foster, Citizens Energy Group P 317.429.3982 sfoster@CitizensEnergyGroup.com	2020 N. Meridian St. Indianapolis, IN 46202	Bill Siebert	Chris Vogt	CIPP - IN	12/29/2017	$1,740,472.80	100%	2642	30: 1240, 36: 1402
17025.09	**Indianapolis, IN White River Extra**	Shari Foster, Citizens Energy Group P 317.429.3982 sfoster@CitizensEnergyGroup.com	2020 N. Meridian St. Indianapolis, IN 46202	Bill Siebert	Chris Vogt	CIPP - IN	12/29/2017	$641,929.46	100%	1030	15, 36, 54
17025.10	**Indianapolis, IN Fall Creek**	Shari Foster, Citizens Energy Group P 317.429.3982 sfoster@CitizensEnergyGroup.com	2020 N. Meridian St. Indianapolis, IN 46202	Bill Siebert	Chris Vogt	CIPP - IN	3/21/2018	$776,215.44	100%	716	42, 48
17025.11	**Indianapolis, IN Lower Pogues**	Shari Foster, Citizens Energy Group P 317.429.3982 sfoster@CitizensEnergyGroup.com	2020 N. Meridian St. Indianapolis, IN 46202	Bill Siebert	Chris Vogt	CIPP - IN	9/27/2019	$3,638,545.89	100%	4196	36, 48, 66, 72
17025.13	**Indianapolis, IN Merrill Street**	Shari Foster, Citizens Energy Group P 317.429.3982 sfoster@CitizensEnergyGroup.com	2020 N. Meridian St. Indianapolis, IN 46202	Bill Siebert	Chris Vogt	CIPP - IN	4/30/2019	$2,504,680.15	100%	3555	15, 18, 21x30, 24, 24x36, 26, 30, 36, 36x48, 36x54,40x55, 48
17025.14	**Indianapolis, IN Plant Bypass Discharge**	Shari Foster, Citizens Energy Group P 317.429.3982 sfoster@CitizensEnergyGroup.com	2020 N. Meridian St. Indianapolis, IN 46202	Bill Siebert	Chris Vogt	CIPP - IN	12/29/2017	$1,042,871.70	100%	1824	48
17025.15	**Indianapolis, IN CSO 012 Area Sewer Rehab**	Shari Foster, Citizens Energy Group P 317.429.3982 sfoster@CitizensEnergyGroup.com	2020 N. Meridian St. Indianapolis, IN 46202	Bill Siebert	Chris Vogt	CIPP - IN	12/29/2017	$970,630.42	100%	5403	12: 288, 15: 509, 20: 3056, 24: 951, 30: 599

SAK Construction Completed Project List

VP Job #	Project Name	Owner's Contact Information	Address	Superintendent	Project Manager	Type	Completed Date	Completed Amount	Percent Complete	Footage Complete	Diameters
17025.16	**Indianapolis, IN Steeple Chase Storm Sewer**	Shari Foster, Citizens Energy Group P 317.429.3982 sfoster@CitizensEnergyGroup.com	2020 N. Meridian St. Indianapolis, IN 46202	Bill Siebert	Chris Vogt	CIPP - IN	12/29/2017	$26,010.00	100%	170	24: 170
17025.18	**Indianapolis, IN CSO CCS Rehab**	Shari Foster, Citizens Energy Group P 317.429.3982 sfoster@CitizensEnergyGroup.com	2020 N. Meridian St. Indianapolis, IN 46202	Bill Siebert	Chris Vogt	CIPP - IN	11/7/2018	$959,398.57	100%	3025	24, 27, 30, 36, 42
17025.19	**Indianapolis, IN Pleaseant Run**	Shari Foster, Citizens Energy Group P 317.429.3982 sfoster@CitizensEnergyGroup.com	2020 N. Meridian St. Indianapolis, IN 46202	Bill Siebert	Chris Vogt	CIPP - IN	6/3/2019	$1,120,453.41	100%	1651	12, 15, 36, 42, 48, 54
17025.20	**Indianapolis, IN Emergency CCTV**	Shari Foster, Citizens Energy Group P 317.429.3982 sfoster@CitizensEnergyGroup.com	2020 N. Meridian St. Indianapolis, IN 46202	Bill Siebert	Chris Vogt	CIPP - IN	9/19/2018	$137,661.00	100%	185	36: 185
17025.21	**Indianapolis, IN East 30th Street**	Shari Foster, Citizens Energy Group P 317.429.3982 sfoster@CitizensEnergyGroup.com	2020 N. Meridian St. Indianapolis, IN 46202	Bill Siebert	Chris Vogt	CIPP - IN	6/14/2019	$1,188,514.46	100%	653	72
17025.23	**Indianapolis, IN East Pleasant**	Shari Foster, Citizens Energy Group P 317.429.3982 sfoster@CitizensEnergyGroup.com	2020 N. Meridian St. Indianapolis, IN 46202	Bill Siebert	Chris Vogt	CIPP - IN	8/6/2019	$1,311,818.97	100%	3901	20, 24, 20 x 30, 30, 42, 48
17025.25	**Indianapolis, IN Ohio-Penn**	Shari Foster, Citizens Energy Group P 317.429.3982 sfoster@CitizensEnergyGroup.com	2020 N. Meridian St. Indianapolis, IN 46202	Bill Siebert	Chris Vogt	CIPP - IN	3/25/2020	$4,111,530.01	100%	5615	24, 30, 36, 54
17025.26	**Indianapolis, IN Millersville-Keystone**	Tracey Black, Citizens Energy Group P 317.294.8582 tblack@CitizensEnergyGroup.com	2020 N. Meridian St. Indianapolis, IN 46202	Bill Siebert	Chris Vogt	CIPP - IN	9/15/2023	$1,897,675.60	100%	2246	42
17025.27	**Indianapolis, IN Penn-Troy**	Shari Foster, Citizens Energy Group P 317.429.3982 sfoster@CitizensEnergyGroup.com	2020 N. Meridian St. Indianapolis, IN 46202	Bill Siebert	Chris Vogt	CIPP - IN	4/20/2021	$2,663,502.32	100%	6123	24: 4797, 36: 1326
17025.28	**Indianapolis, IN Pleasant Run and Iowa**	Tracey Black, Citizens Energy Group P 317.294.8582 tblack@CitizensEnergyGroup.com	2020 N. Meridian St. Indianapolis, IN 46202	Bill Siebert	Chris Vogt	CIPP - IN	7/19/2022	$2,856,314.40	100%	1331	66
17025.29	**Indianapolis, IN LeGrande and Naomi**	Shari Foster, Citizens Energy Group P 317.429.3982 sfoster@CitizensEnergyGroup.com	2020 N. Meridian St. Indianapolis, IN 46202	Bill Siebert	Chris Vogt	CIPP - IN	7/9/2020	$638,477.25	100%	2397	20: 358, 24: 1046, 30: 993
17025.30	**Indianapolis, IN Lockburn and Werges**	Shari Foster, Citizens Energy Group P 317.429.3982 sfoster@CitizensEnergyGroup.com	2020 N. Meridian St. Indianapolis, IN 46202	Bill Siebert	Chris Vogt	CIPP - IN	7/1/2020	$567,071.71	100%	2439	24: 2439
17025.31	**Indianapolis, IN Madison**	Shari Foster, Citizens Energy Group P 317.429.3982 sfoster@CitizensEnergyGroup.com	2020 N. Meridian St. Indianapolis, IN 46202	Bill Siebert	Chris Vogt	CIPP - IN	10/16/2019	$127,754.01	100%	491	15: 491
17025.32	**Indianapolis, IN Michigan & Columbine**	Shari Foster, Citizens Energy Group P 317.429.3982 sfoster@CitizensEnergyGroup.com	2020 N. Meridian St. Indianapolis, IN 46202	Bill Siebert	Chris Vogt	CIPP - IN	12/6/2019	$48,282.90	100%	458	8: 268, 15: 190
17025.33	**Indianapolis, IN Springmill Rd.**	Shari Foster, Citizens Energy Group P 317.429.3982 sfoster@CitizensEnergyGroup.com	2020 N. Meridian St. Indianapolis, IN 46202	Bill Siebert	Chris Vogt	CIPP - IN	12/6/2019	$36,637.20	100%	572	8: 572
17025.34	**Indianapolis, IN 40th & Graham**	Shari Foster, Citizens Energy Group P 317.429.3982 sfoster@CitizensEnergyGroup.com	2020 N. Meridian St. Indianapolis, IN 46202	Bill Siebert	Chris Vogt	CIPP - IN	2/28/2020	$96,110.00	100%	1209	12
17025.35	**Indianapolis, IN 30th & Fall Creek**	Shari Foster, Citizens Energy Group P 317.429.3982 sfoster@CitizensEnergyGroup.com	2020 N. Meridian St. Indianapolis, IN 46202	Bill Siebert	Chris Vogt	CIPP - IN	12/6/2019	$69,371.50	100%	383	10: 383
17025.36	**Indianapolis, IN 4300 Burwood Drive**	Shari Foster, Citizens Energy Group P 317.429.3982 sfoster@CitizensEnergyGroup.com	2020 N. Meridian St. Indianapolis, IN 46202	Bill Siebert	Chris Vogt	CIPP - IN	12/6/2019	$20,344.70	100%	160	12: 160
17025.37	**Indianapolis, IN - 92EM04211, 30th and Kessler**				Chris Vogt	CIPP - IN	12/31/2019	$133,064.00	100%	240	10: 240
17025.38	**Indianapolis, IN 1-70 Downtown Sewer Preparation**	Shari Foster, Citizens Energy Group P 317.429.3982 sfoster@CitizensEnergyGroup.com	2020 N. Meridian St. Indianapolis, IN 46202	Bill Siebert	Chris Vogt	CIPP - IN	5/8/2020	$210,361.30	100%	869	15, 18, 48
17025.40	**Indianapolis, IN Pleasant Run Diversion Rehab**	Shari Foster, Citizens Energy Group P 317.429.3982 sfoster@CitizensEnergyGroup.com	2020 N. Meridian St. Indianapolis, IN 46202	Bill Siebert	Chris Vogt	CIPP - IN	9/30/2020	$5,187,641.90	100%	3680	10, 15, 33, 42, 54, 57, 58, 60, 66
17025.41	**Indianapolis, IN Nowland Ave Emergency Lining**	Shari Foster, Citizens Energy Group P 317.429.3982 sfoster@CitizensEnergyGroup.com	2020 N. Meridian St. Indianapolis, IN 46202	Bill Siebert	Chris Vogt	CIPP - IN	9/30/2020	$129,145.00	100%	425	24: 425
17025.43	**Indianapolis, IN Golden Eagles & I-74**	Shari Foster, Citizens Energy Group P 317.429.3982 sfoster@CitizensEnergyGroup.com	2020 N. Meridian St. Indianapolis, IN 46202	Bill Siebert	Chris Vogt	CIPP - IN	3/15/2021	$50,001.60	100%	426	10: 426
17025.44	**Indianapolis, IN East 21st Force Main Discharge Repair**	Shari Foster, Citizens Energy Group P 317.429.3982 sfoster@CitizensEnergyGroup.com	2020 N. Meridian St. Indianapolis, IN 46202	Bill Siebert	Chris Vogt	CIPP - IN	1/6/2021	$69,049.40	100%	106	18: 106
17025.49	**Indianapolis, IN CSO 077**	Shari Foster, Citizens Energy Group P 317.429.3982 sfoster@CitizensEnergyGroup.com	2020 N. Meridian St. Indianapolis, IN 46202	Bill Siebert	Chris Vogt	CIPP - IN	10/20/2021	$236,736.50	100%	1292	12: 643, 24: 649
17025.52	**Indianapolis, IN Thermoform Pilot**	Shari Foster, Citizens Energy Group P 317.429.3982 sfoster@CitizensEnergyGroup.com	2020 N. Meridian St. Indianapolis, IN 46202	Bill Siebert	Chris Vogt	CIPP - IN	9/17/2021	$57,039.00	100%	462	12: 462
17025.53	**Indianapolis, IN Pleasant Run**	Tracey Black, Citizens Energy Group P 317.294.8582 tblack@CitizensEnergyGroup.com	2020 N. Meridian St. Indianapolis, IN 46202	Bill Siebert	Chris Vogt	CIPP - IN	4/30/2022	$8,504,041.13	100%	10081	10, 12, 15, 18, 20, 24, 36, 42, 48, 60, 66
17025.55	**Indianapolis, IN 49W Maryland**	Shari Foster, Citizens Energy Group P 317.429.3982 sfoster@CitizensEnergyGroup.com	2020 N. Meridian St. Indianapolis, IN 46202	Bill Siebert	Chris Vogt	CIPP - IN	5/21/2021	$92,800.70	100%	185	24: 185
17025.57	**Indianapolis, IN Sheridan Ave - 43rd Pl**	Tracey Black, Citizens Energy Group P 317.294.8582 tblack@CitizensEnergyGroup.com	2020 N. Meridian St. Indianapolis, IN 46202	Bill Siebert	Chris Vogt	CIPP - IN	12/1/2023	$29,568.10	100%	24473	15: 24473

SAK Construction Completed Project List

VP Job #	Project Name	Owner's Contact Information	Address	Superintendent	Project Manager	Type	Completed Date	Completed Amount	Percent Complete	Footage Complete	Diameters
17025.63	**Indianapolis, IN Pleasant Run 2022**	Tracey Black, Citizens Energy Group P 317.294.8582 tblack@CitizensEnergyGroup.com	2020 N. Meridian St. Indianapolis, IN 46202	Bill Siebert	Chris Vogt	CIPP - IN	10/1/2022	$7,279,050.82	100%	6484	15, 18, 20, 21, 24, 30, 36, 42, 48, 54, 60, 78
17025.66	**Indianapolis, IN Sheffield Belmont Lambert**	Tracey Black, Citizens Energy Group P 317.294.8582 tblack@CitizensEnergyGroup.com	2020 N. Meridian St. Indianapolis, IN 46202	Bill Siebert	Chris Vogt	CIPP - IN	10/31/2022	$837,552.60	100%	2596	12: 196, 20: 672, 24: 978, 36: 750
17025.72	**Indianapolis, IN 92PI06154, 33rd & Orchard Sewer Rehab**	Tracey Black, Citizens Energy Group P 317.294.8582 tblack@CitizensEnergyGroup.com	2020 N. Meridian St. Indianapolis, IN 46202	Bill Siebert	Chris Vogt	CIPP - IN	8/11/2023	$159,491.00	100%	90	72
17025.73	**Indianapolis, IN 92PI06184, Nickel Plate Trail SDSR**	Tracey Black, Citizens Energy Group P 317.294.8582 tblack@CitizensEnergyGroup.com	2020 N. Meridian St. Indianapolis, IN 46202	Bill Siebert	Chris Vogt	CIPP - IN	7/31/2023	$286,260.00	100%	1344	4,8,12,15
17025.76	**Indianapolis, IN 92EM06305, 11 South Meridian**	Tracey Black, Citizens Energy Group P 317.294.8582 tblack@CitizensEnergyGroup.com	2020 N. Meridian St. Indianapolis, IN 46202	Bill Siebert	Chris Vogt	CIPP - IN	9/13/2023	$39,405.10	100%	260	12: 260
17029.00	**Riverside, CA Trautwein & Alessandro**	Thuy Nguyen, City of Riverside P: 951.826.5706 Email: tnnguyen@riversideca.gov	3900 Main Street Riverside, CA 92522	James Bower	Leo Calvario	CIPP - CA	1/19/2018	$5,033,366.46	100%	8050	16: 8050
17030.00	**San Francisco, CA Bay Corridor**	Francisco Charvet, Sub to A & B Construction P 510.999.6000 francisco@a-bconstruction.net	1350 4th Street Berkeley, CA 94710	Jarmann Frazer	Todd Chalk	CIPP - CA	12/14/2018	$147,100.00	100%	420	24: 420
17031.00	**St. Louis, MO Deer Creek 2017, A, 12036-015.1, 20527**	Steve Welnick, Metropolitan STL Sewer District P 314.768.6378 swelnick@stlmsd.com	2350 Market St. St. Louis, MO 63103	Alan Stuhlsatz	Travis Jerrels	CIPP - MO	7/23/2020	$3,365,454.91	100%	64918	8, 10, 12, 15, 18, 21, 24, 30
17032.00	**San Francisco, CA Contract No. WD-2760: 12" and 8" Ductile Iron Water Main Replacement on Waller St and Various Side Streets**	Mike Hilz, Sub to Hernandez P 415.824.4731 mike@hernandez-engineering.com	850 Rankin St. San Francisco, CA 94124	Andrew Johnson	Todd Chalk	CIPP - CA	7/17/2017	$458,921.00	100%	443	60
17034.00	**San Francisco, CA 2534J - As Needed Paving Contract No. 11 WO #11 - Mission & Trumbull**	Tony Ruiz, Sub to A. Ruiz Construction P 415.647.4010 truiz@aruizconstruction.com	1601 Cortland Ave. San Francisco, CA 94110	Andrew Johnson	Todd Chalk	CIPP - CA	6/12/2017	$49,700.00	100%	105	12: 105
17035.00	**Tamarac, FL FY16 Wastewater CIPP Lining**	Jerry Robinson, City of Tamarac P 954.821.1582 Jerry.Robinson@Tamatac.org	10101 State Street Tamarac, FL 33321	Angie Miller	Stan Krause	CIPP - FL	8/19/2020	$2,494,735.00	100%	106868	8: 101532, 10: 5336
17036.00	**James Island, SC Fort Johnson and DilLump Sum Bluff Trunk Sewer CIPP Lining and Manhole Lining Project, Project No. WW2017-4**	Jeff Cohen, James Island Public Service District P 843-270-2649 Jeff@cohen.as	1739 Signal Point Rd. Charleston, SC 29422	Chad Rusher	Bob Quackenbush	CIPP - SC	7/6/2018	$407,342.01	100%	3426	8: 388, 21: 3038
17038.00	**Overland Park, KS The Vue, CIPP Lining**	Bill Rexroat, Sub to McClan Construction 913.897.2850 bill@mcclanconstruction.com	McClan Construction, LLC PO Box 387 Stilwewell, KS 66085	Danny Brown	Randy Mather	CIPP - KS	8/31/2017	$34,078.40	100%	1121	8: 1121
17039.00	**Hilmar, CA Hilmar Cheese Co.**	Troy Roos, Hilmar Cheese Company P 209.656.2240 Troos@hilmarcheese.com	9001 North Lander Ave. Hilmar, CA 95324	Andrew Johnson	Todd Chalk	CIPP - CA	10/9/2018	$184,500.00	100%	371	12: 371
17040.00	**Kansas City, MO Blue River North I & I**	John Dougherty, Sub to Kissick Construction Co., Inc. P 816.363.5530 jdougherty@kissickco.com	8131 Indiana Ave. Kansas City, MO 64132	Danny Brown	Randy Mather	CIPP - MO	10/16/2018	$710,339.75	100%	18889	8: 3360, 10: 9649, 12: 888, 15: 1584, 18: 270, 24: 2628, 27: 510
17041.00	**Kansas City, MO Blue River Central I & I**	John Dougherty, Sub to Kissick Construction Co., Inc. P 816.363.5530 jdougherty@kissickco.com	8131 Indiana Ave. Kansas City, MO 64132	Danny Brown	Randy Mather	CIPP - MO	12/16/2019	$2,295,671.85	100%	76952	8: 53159, 10: 10188, 12: 7210, 15: 5336, 18: 1059
17042.00	**Richmond, VA Meadowbrook Country Club**	Roger Minter, Meadowbrook Country Club P 804-640-7737 rminter@jlminterelectric.com	3700 Cogbill Rd. Richmond, VA 23234	Chad Rusher	Bob Quackenbush	CIPP - VA	6/9/2017	$41,875.00	100%	1250	8: 1250
17043.00	**Memphis, TN Harbor Ave Lift Station Rehabilitation**	Contact Name, Sub to Chris-Hill Construction Company P Contact Phone Number Contact Email	4749 Pleasant Run Rd. Memphis, TN 38118	Jason Laney	Dan Swidrak	CIPP - TN	7/19/2017	$78,043.35	100%	60	42
17044.00	**Overland Park, KS YRC Surface Parking Expansion**	Ron Newman, Sub to Titan Built LLC 913.782.6700 rnewman@titanbuilt.com	11865 S. Conley Rd. Olathe, KS 66061	Danny Brown	Randy Mather	CIPP - KS	12/17/2018	$8,150.00	100%	195	: 195
17045.00	**Longview, TX Sanitary and Process Sewer Pipeline Rehabilitation - Fireline Phase 2**	Danny Bradley, Eastman Chemical P 903-237-5378 dannybradley@eastman.com	PO Box 7444 Longview, TX 75607	TBD	Dan Swidrak	CIPP - TX	12/15/2017	$102,146.40	100%	882	6: 462, 8: 98, 12: 322
17046.00	**Trenton, OH MillerCoors Brewery Pipe Lining Project in Trenton, OH**	Mike Samford, Sub to Vortex Industrial Solutions, LLC P 832-233-2309 mikes@nodigind.com	9155 Wallisville Rd. Houston, TX 77029	Chad Rusher/ Josh Grote	Bob Quackenbush	CIPP - OH	2/26/2018	$544,914.17	100%	1752	4: 321, 6: 502, 10: 184, 12: 512, 15: 233
17047.01	**Howard County, MD CA015-2017,S-6232,Task1**	Kin K. Siew, Howard County P 410-313-6124 ksiew@howardcountymd.gov	6751 Columbia Gateway Dr. Suite 501 Columbia, MA 21046	Chad Rusher	Bob Quackenbush	CIPP - MD	1/23/2018	$554,942.00	100%	2410	16: 2410
17047.02	**Howard County, MD Storm Drain Repair**	Matt Wolf, Howard County Public Works - Highways P 410.313.7289 mwolf@howardcountymd.gov	7125 Riverwood Drive Suite B Columbia, MD 21046	Michael Friend	Ken Sprau	CIPP - MD	5/1/2019	$235,000.00	100%	1659	15: 625, 18: 309, 21: 100, 24: 445, 27: 180
17047.03	**Howard County, MD Additional CIPP**	Matt Wolf, Howard County Public Works - Highways P 410-313-7289 mwolf@howardcountymd.gov	7125 Riverwood Drive Suite B Columbia, MD 21046	Michael Friend	Ken Sprau	CIPP - MD	10/15/2019	$179,400.00	100%	975	18: 577, 21: 30, 24: 80, 27: 288
17047.04	**Howard County, MD SewelLump Sum Orchard**	Silver Chai, Howard County DPW P 410.313.6121 SChai@howardcountymd.gov	7125 Riverwood Drive Suite B Columbia, MD 21046	Michael Friend	Ken Sprau	CIPP - MD	9/1/2019	$263,245.00	100%	6000	8: 6000
17047.05	**Howard County, MD Storm Drain Repairs, Task 5**	Matt Wolf, Howard County Public Works - Highways P 410.313.7289 mwolf@howardcountymd.gov	7125 Riverwood Drive Suite B Columbia, MD 21046	Neil Soriano	Ken Sprau	CIPP - MD	9/15/2020	$728,531.00	100%	3590	15: 800, 18: 907, 21: 547, 24: 531, 27: 805
17047.06	**Howard County, MD Storm Drain Repairs, Task 6**	Matt Wolf, Howard County Public Works - Highways P 410.313.7289 mwolf@howardcountymd.gov	7125 Riverwood Drive Suite B Columbia, MD 21046	Neil Soriano	Ken Sprau	CIPP - MD	4/1/2020	$346,150.00	100%	2379	12: 52, 15: 1300, 18: 275, 21: 520, 24: 232
17047.08	**Howard County, MD D1169 , Tiber Branch**	Matt Wolf, Howard County Public Works - Highways P 410.313.7289 mwolf@howardcountymd.gov	7125 Riverwood Drive Suite B Columbia, MD 21046	Jacob Lambert	Ken Sprau	CIPP - MD	11/20/2020	$154,666.30	100%	1921	12: 1921

SAK Construction Completed Project List

VP Job #	Project Name	Owner's Contact Information	Address	Superintendent	Project Manager	Type	Completed Date	Completed Amount	Percent Complete	Footage Complete	Diameters
17047.10	**Howard County, MD Cardinal Lane CIPP Lining, Task 10**	Matt Wolf, Howard County Public Works - Highways P 410.313.7289 mwolf@howardcountymd.gov	7125 Riverwood Drive Suite B Columbia, MD 21046	Neil Aparicio	Ken Sprau	CIPP - MD	10/23/2020	$16,750.00	100%	50	8: 50
17047.12	**Howard County, MD D1169 Storm Drain Reapirs, Task 12**	Matt Wolf, Howard County Public Works - Highways P 410.313.7289 mwolf@howardcountymd.gov	7125 Riverwood Drive Suite B Columbia, MD 21046	Neil Soriano / Matt Zellam	Ken Sprau	CIPP - MD	1/22/2023	$514,662.00	100%	1969	15: 675, 18: 476, 21: 193, 24: 445, 27 : 180
17047.13	**Howard County, MD S6284b - Deep Run Emergency Repair**	Silver Chai, Howard County Public Works - Highways P 410.313.6121 schai@howardcountymd.gov	7125 Riverwood Drive Suite B Columbia, MD 21046	Matt Zellam	Ken Sprau	CIPP - MD	8/22/2023	$249,566.00	100%	605	42
17047.16	**Howard County, MD Isle of Mann Way CIPP Rehab**	Matt Wolf, Howard County Public Works - Highways P 410.313.7289 mwolf@howardcountymd.gov	7125 Riverwood Drive Suite B Columbia, MD 21046	Matt Zellam	Ken Sprau	CIPP - MD	1/23/2023	$108,664.00	100%	695	15: 565, 18: 130
17047.17	**Howard County, MD Columbia Gateway CIPP Rehab**	Matt Wolf, Howard County Public Works - Highways P 410.313.7289 mwolf@howardcountymd.gov	7125 Riverwood Drive Suite B Columbia, MD 21046	Matt Zellam	Ken Sprau	CIPP - MD	1/23/2023	$464,912.00	100%	2281	15: 1373, 18: 138, 21: 165, 24: 144, 36: 461
17047.18	**Howard County, MD Robert Fulton Dr. 36" CIPP Rehab**	Matt Wolf, Howard County Public Works - Highways P 410.313.7289 mwolf@howardcountymd.gov	7125 Riverwood Drive Suite B Columbia, MD 21046	Matt Zellam	Ken Sprau	CIPP - MD	1/23/2023	$198,915.00	100%	603	36: 603
17048.00	**Kansas City, KS 15" Storm on Turner Diagonal**	Aaron Carter, Sub to Emery Sapp & Sons, Inc. 816.221.3500 Aaron.Carter@Emerysapp.com	Columbia, MD 21046	Danny Brown	Randy Mather	CIPP - KS	9/30/2017	$17,000.00	100%	104	15: 104
17049.01	**Caltrans, CA 707827, 03-3H2904, Soda Springs**	Ryan Ho, Sub to Granite Construction P 775.842.2512 ryan.ho@gcinc.com	1900 Glendale Ave. Sparks, NV 89431	Andrew Johnson	Todd Chalk	CIPP - CA	6/4/2018	$144,800.00	100%	130	54
17050.00	**Carmel, CA Lining of 27" ACP Sanitary Sewer**	Drew Lander, Carmel Area Wastewater P 831.624.1248 lander@cawd.org	PO Box 221428 Carmel, CA 93922	James Bower	Todd Chalk	CIPP - CA	8/4/2017	$229,470.00	100%	600	27: 600
17051.00	**Anne Arundel County, MD Large Diameter Dewer Relining 7**	Ken Ward, Anne Arundel County P 410-222-8431 pwward24@aacounty.com	2660 Riva Road, 3rd Floor Annapolis, MD 21401	Chad Rusher	Bob Quackenbush	CIPP - MD	10/1/2018	$616,811.00	100%	3337	15: 66, 18: 1034, 27: 1524, 30: 541, 36: 172
17052.00	**Ellisville, MO Gambrill Gardens Contract No.: 16.015.SAK**	Brian Schreiber, Sub to BEX Construction Services P 314.932.2100 Brian@bexstl.com	8050 Watson Rd. St. Louis, MO 63117	Matt Hirtz	Travis Jerrels	CIPP - MO	7/27/2017	$16,000.00	100%	104	8: 104
17053.00	**Caltrans, CA Hwy 49 Sink Hole Repair**	Elmire Afkham, Sub to Granite Construction P 916. 825.7028 elmira.afkham@gcinc.com	PO Box 15287 Sacramento, CA 95851	Andrew Johnson	Todd Chalk	CIPP - CA	8/31/2017	$174,200.00	100%	208	48
17054.00	**Waukee, IA SS Collection System Rehab - Phase 3**	Tim Royer, City of Waukee P 515.978.7920 troyer@waukee.org	230 W. Hickman Road Waukee, IA	Jeff Hirtz	Nick Pryor	CIPP - IA	4/2/2018	$307,322.25	100%	5452	10: 1484, 12: 2002, 16: 45, 21: 1202, 24: 719
17055.00	**Lawrence, KS 2017 SS Rehab**	Nicholas Hoyt, P.E., City of Lawrence - Utilities Department P 785. 832.7882 nhoyt@lawrenceks.org	6 East 6th St. Lawrence, KS	Danny Brown	Randy Mather	CIPP - KS	7/5/2018	$1,309,668.08	100%	46581	8: 37487, 10: 4053, 12: 327, 15: 1636, 18: 354, 24: 2724
17056.00	**San Francisco, CA 2541JR, 01-0144, Inner Sunset Streetscape Improvement and Muni Forward Irving between 3rd & 19th Ave.**	Sean Coffey, Sub to Mitchell Engineering P 415.794.6946 scoffey@mithcel-engineering.com	1395 Evans Ave. San Francisco, CA 94124	Andrew Johnson	Todd Chalk	CIPP - CA	3/28/2018	$348,317.40	100%	1034	8, 24, 2'6 x 3'9
17057.01	**St. Petersburg, FL Sanitary Sewer Renewal 1**	Louis Seufert, City of St. Petersburg, FL P 727.892.5659 Louis.seufert@stpete.org	One 4th Street North, 5th Floor St. Petersburg, FL 33701	Angie Miller	Stan Krause	CIPP - FL	9/14/2020	$1,900,569.50	100%	58738	8: 47183, 10: 6470, 12: 4221, 15: 864
17057.02	**St. Petersburg, FL Sanitary Sewer Renewal 2**	Louis Seufert, City of St. Petersburg, FL P 727.892.5659 Louis.seufert@stpete.org	One 4th Street North, 5th Floor St. Petersburg, FL 33701	Angie Miller	Stan Krause	CIPP - FL	9/14/2020	$766,410.75	100%	22202	8: 15892, 10: 3532, 12: 1821, 18: 957
17057.03	**St. Petersburg, FL 17048-311; Release 3**	Louis Seufert, City of St. Petersburg, FL P 727.892.5659 Louis.seufert@stpete.org	One 4th Street North, 5th Floor St. Petersburg, FL 33701	Angie Miller	Stan Krause	CIPP - FL	4/1/2022	$4,019,333.05	100%	122125	8: 90712, 10: 25174, 12: 6239
17058.00	**Las Vegas, NV 13267, 2016R2 Annual**	Nate Smith, Sub to Las Vegas Paving Corp. P 702.251.5800 nate.smith@lasvegaspaving.com	4420 S. Decatur Blvd. Las Vegas, NV 89103	James Bower	Brian Ackerman	CIPP - NV	7/30/2018	$635,386.00	100%	11854	8: 10053, 12: 345, 15: 1456
17059.01	**Kalamazoo, MI Botsford Yard**	Stephanie Knight, Sub to AECOM Technical Services, Inc. P 919.461.1309 Stephanieknight@aecom.com	515 South Flower St, Suite 1050 Los Angeles, CA 90071	Jeff Hirtz	Cory Street	CIPP - MI	12/1/2018	$409,075.00	100%	650	12, 42
17060.00	**Fairfax, VA Difficult Run Raw Sewage Pump Station Rehabilitation**	zach Pistilli, Sub to Ulliman Schutte Construction, LLC P 610-547-1771 zpistilli@ullimanschutte.com	9950 Colvin Run Road Great FalLump Sum, VA 22066	Chad Rusher	Bob Quackenbush	CIPP - VA	9/30/2017	$353,389.20	100%	510	36: 510
17061.00	**Davenport, IA Duck Creek South Interceptor Rehabilitation Project**	Brad Guy, City of Davenport P 563.327.5105 Bguy@ci.davenport.ia.us	226 West Fourth St. Davenport, IA 52801	Brad Schenning	Cory Street	CIPP - IA	3/1/2019	$4,399,619.84	100%	23052	24, 30, 39, 42, 48
17062.00	**Franklin, TN 54" Hobas Pipe Rehab**	Zachary Bloomfield, Sub to Garney Companies P 615.788.1506 zbloomfield@gamey.com	200 Cruchfield Avenue Nashville, TN 37210	Glenn Spears	Deborah Bartley	CIPP - TN	9/30/2017	$603,011.74	100%	630	54
17063.00	**Caltrans, CA - Emergency Approach Slab Replacement Caltrans Contract No. 03-3H3804**	Robert Coupe, Sub to Golden State Bridge, Inc. P 925.372.8000 rcouple@gsbridge.com	3701 Mallard Dr. Benicia, CA 94510	Jarmann Frazer	Stan Krause	CIPP - CA	11/2/2017	$255,000.00	100%	220	36: 220
17064.00	**Memphis, TN John's Creek Interceptor CIPP**	Joe Collins, Sub to Overland Contracting (Black & Veatch) P 913.458.9520 collinsjj@overlandcontracting.com	3485 Poplar Avenue, Suite 230 Memphis, TN 38111	Glenn Spears	Randy Hansbrough	CIPP - TN	2/12/2019	$811,018.16	100%	2870	30: 2870
17065.00	**Las Vegas, NV Downtown Interceptor Sewer Rehabilitatoin Phase 2**	Jake Marshall, Sub to Las Vegas Paving Corp. P 702.251.5800 jake.marshall@lvpaving.com	4420 S. Decatur Blvd. Las Vegas, NV 89103	James Bower	Brian Ackerman	CIPP - NV	12/15/2017	$2,341,423.00	100%	6573	48, 54
17066.00	**Caltrans, CA Hwy 1 Embankment Repair at Buena Vista, Watsonville, Caltrans #05-1H7304**	Anthony Torres, Sub to Granite Construction P 831.750.0421 anthony.torres@gcinc.com	715 Comstock Street Santa Clara, CA 95054	Jarmann Frazer	Todd Chalk	CIPP - CA	11/2/2017	$141,379.35	100%	270	36: 270

SAK Construction Completed Project List

VP Job #	Project Name	Owner's Contact Information	Address	Superintendent	Project Manager	Type	Completed Date	Completed Amount	Percent Complete	Footage Complete	Diameters
17067.00	**Fort Bliss, TX CIPP V RR 2017**	Ruben Contreras, Fort Bliss Water Services Co. P 915.564.1332 ruben.contreras@ftbliss.asusinc.com	516A Pleasonton, 3rd, 310N El Paso, TX 79916	James Farnsworth	Brian Ackerman	CIPP - TX	12/5/2017	$1,113,126.00	100%	22766	6: 596, 8: 19299, 10: 1440, 12: 1431
17068.00	**Blue Springs, MO CMP Culvert**	Donna Caton, City of Blue Springs 816.228.0277 dcaton@bluespringsgov.com	City of Blue Springs Public Works 500 SE Sunnyside School Rd. Blue Springs, MO 64014	Danny Brown	Randy Mather	CIPP - MO	5/24/2018	$64,429.25	100%	353	24: 353
17069.01	**Kansas City, MO City Wide Sewer, Waterways**	John Dougherty, Sub to Kissick Construction Co., Inc. P 816.363.5530 jdougherty@kissickco.com	8131 Indiana Ave. Kansas City, MO 64132	Danny Brown	Randy Mather	CIPP - MO	6/21/2019	$83,640.00	100%	664	12: 468, 30: 196
17069.20	**Kansas City, MO City Wide Sewer, Waterways, Yr 2**	John Dougherty, Sub to Kissick Construction Co., Inc. P 816.363.5530 jdougherty@kissickco.com	8131 Indiana Ave. Kansas City, MO 64132	Danny Brown	Brent Adams	CIPP - MO	9/5/2023	$1,046,231.80	100%	4366	8, 10, 12, 15, 24, 46, 48
17069.21	**Kansas City, MO City Wide Sewer, Waterways, Yr 2**	Thomas Hudgens, Sub to Reddord Construction P 816.540.2030 Thomas@redfordconstruction.com	17322 S State Route 291 Pleasant Hill, MO 64080	Danny Brown	Brent Adams	CIPP - MO	11/9/2020	$170,682.00	100%	1348	8: 221, 12: 724, 24: 403
17069.30	**Kansas City, MO 21-100-02, SR Waterways Yr 3**	Thomas Hudgens, Sub to Reddord Construction P 816.540.2030 Thomas@redfordconstruction.com	17322 S State Route 291 Pleasant Hill, MO 64080	Danny Brown	Brent Adams	CIPP - MO	9/27/2023	$398,083.00	100%	3632	8: 531,10: 518, 16: 226, 18: 1624, 24: 499, 33: 234
17070.00	**Gilbert, AZ CIPP Lining Neely St.**	Tom Foley, Sub to B & F Contracting P 520.282.1264 tomf@bfcontracting.com	11011 N. 23rd Ave. Phoenix, AZ 85029	Gary Rodgers	David Burbank	CIPP - AZ	9/22/2017	$31,700.00	100%	115	18: 115
17071.00	**Pinellas Park, FL Renewal 5, Contract 13/014, 2017 Annual**	D Floyd, City of Pinellas Park P 727.369.5623 dfloyd@pinellas-park.com	8000 60th Street North Pinellas Park, FL 33781	Angie Miller	Stan Krause	CIPP - FL	7/30/2018	$549,552.82	100%	17040	8: 17040
17072.00	**Brentwood, TN 2017 Brentwood Sewer Rehab**	Drew Muirhead, City of Brentwood P 615-371-0080 Muirhead, Drew <Drew.Muirhead@brentwoodtn.gov>	1750 General George Patton Dr. Brentwood, TN 37024	Glen Spears	Deborah Bartley	CIPP - TN	10/26/2018	$1,503,246.50	100%	11804	8: 2858, 15: 3149, 24: 2839, 30: 2958
17073.00	**Rocklin, CA Replacement of Corrugated Metal Drainage**	Rick Lawrence, City of Rocklin P 916.625.5521 richard.lawrence@rocklin.ca.us	4081 Alvis Court Rocklin, CA 95677	Andrew Johnson	Todd Chalk	CIPP - CA	5/14/2018	$801,565.63	100%	4025	12, 18, 21, 24, 27, 30, 36, 42
17074.00	**Southport, IN Crossgate Storm Sewer Rehab**	Bill Leber, Wessler Engineering P 317-788-4551 bill@wesslerengineering.com	6901 Derbyshire Rd Southport, IN 46227	Bill Siebert	Chris Vogt	CIPP - IN	11/22/2017	$63,934.00	100%	620	12: 26, 15: 594
17075.00	**Fresno, CA Mountain Cascade, 91403, Merced St.**	Randy Buckman, Sub to Mountain Cascade, Inc. P 925.570.8413 randyb@mountaincascade.com	PO Box 5050 Livermore, CA 94551	Jarmann Frazer	Todd Chalk	CIPP - CA	7/25/2018	$2,906,329.95	100%	8285	24, 27, 42, 48
17076.00	**Chester, PA SR-1714-C - Vernon Run Sanitary**	Joe Centrone, (DELCORA) Delaware County Regional Water Quality Control Authority P 610.637.5741 centronej@delcora.org	P.O. Box 999 Chester, PA 19016-0999	Chad Rusher	Travis Ewing	CIPP - PA	3/1/2018	$80,282.50	100%	707	10: 707
17077.01	**Clinton, MO Term Contract 2016 - 2018 Work Order**	Cliff Jordan, City of Clinton P 660.885.6611 cjordan@cityofclintonmo.com	105 E. Ohio Street Clinton, MO 64735	Danny Brown	Randy Mather	CIPP - MO	11/14/2018	$51,950.75	100%	1691	8: 1349, 12: 342
17078.00	**Antioch, CA Antioch Force Main 102, No 18122**	Than Vo, Sub to Delta Diablo P 925.756.1949 thanv@deltadiablo.org	2500 Pittsburg-Antioch Hwy Antioch, CA 94509	Jarmann Frazer	Todd Chalk	CIPP - CA	11/22/2017	$682,750.00	100%	1600	24: 1600
17079.00	**Decatur, IL 2017-28, 2017 Trenchless Long Lining Repairs**	Paul Caswell, City of Decatur P 217.424.2747 pcaswell@decaturil.gov	#1 Gary K Anderson Plaza Decatur, IL 62523	Jeff Hirtz	Nick Pryor	CIPP - IL	4/30/2019	$660,179.93	100%	18329	8: 14839, 10: 1529, 12: 1348, 15: 229, 30: 384
17080.01	**Pima County, AZ Work Order #1**	John Norton, Sub to B & F Contracting, Inc. P 623.217.7763 jnorton@bfcontracting.com	11011 N. 23rd Ave. Phoenix, AZ 85029	Gary Rodgers	David Burbank	CIPP - AZ	1/12/2018	$438,178.00	100%	10301	8: 9773, 12: 413, 15: 115
17080.02	**Pima County, AZ Work Order #2**	John Norton, Sub to B & F Contracting, Inc. P 623.217.7763 jnorton@bfcontracting.com	11011 N. 23rd Ave. Phoenix, AZ 85029	Gary Rodgers	David Burbank	CIPP - AZ	2/22/2018	$25,635.00	100%	355	14: 355
17080.03	**Pima County, AZ Work Order #3**	John Norton, Sub to B & F Contracting, Inc. P 623.217.7763 jnorton@bfcontracting.com	11011 N. 23rd Ave. Phoenix, AZ 85029	Gary Rodgers	David Burbank	CIPP - AZ	4/6/2018	$207,600.00	100%	1235	30: 1235
17080.04	**Pima County, AZ Work Order #4**	Kyle Foley, Sub to B & F Contracting, Inc. P 520.207.8228 kfoley@bfcontracting.com	11011 N. 23rd Ave. Phoenix, AZ 85029	James Bower	David Burbank	CIPP - AZ	6/8/2018	$178,384.00	100%	4669	8: 4221, 12: 448
17080.05	**Pima County, AZ Work Order #5**	Kyle Foley, Sub to B & F Contracting, Inc. P 520.207.8228 kfoley@bfcontracting.com	11011 N. 23rd Ave. Phoenix, AZ 85029	Gary Rodgers	David Burbank	CIPP - AZ	8/24/2018	$167,908.00	100%	4494	8: 4494
17080.06	**Pima County, AZ Work Order #6**	Kyle Foley, Sub to B & F Contracting, Inc. P 520.207.8228 kfoley@bfcontracting.com	11011 N. 23rd Ave. Phoenix, AZ 85029	Gary Rodgers	David Burbank	CIPP - AZ	10/5/2018	$249,356.00	100%	7061	8: 7061
17080.07	**Pima County, AZ Work Order #7**	Kyle Foley, Sub to B & F Contracting, Inc. P 520.207.8228 kfoley@bfcontracting.com	11011 N. 23rd Ave. Phoenix, AZ 85029	Gary Rodgers	David Burbank	CIPP - AZ	4/26/2019	$297,660.00	100%	1515	42
17080.08	**Pima County, AZ Work Order #8**	Kyle Foley, Sub to B & F Contracting, Inc. P 520.207.8228 kfoley@bfcontracting.com	11011 N. 23rd Ave. Phoenix, AZ 85029	Gary Rodgers	David Burbank	CIPP - AZ	9/14/2020	$616,520.00	100%	17211	8: 16501, 12: 710
17080.09	**Pima County, AZ Work Order #9**	Kyle Foley, Sub to B & F Contracting, Inc. P 520.207.8228 kfoley@bfcontracting.com	11011 N. 23rd Ave. Phoenix, AZ 85029	Gary Rodgers	David Burbank	CIPP - AZ	11/7/2019	$288,571.00	100%	1623	30: 791, 33: 381, 36: 451
17080.10	**Pima County, AZ Work Order #10**	Kyle Foley, Sub to B & F Contracting, Inc. P 520.207.8228 kfoley@bfcontracting.com	11011 N. 23rd Ave. Phoenix, AZ 85029	Brandon Smith	David Burbank	CIPP - AZ	3/12/2021	$220,040.00	100%	6070	8: 6070
17081.00	**Lenexa, KS Brookwood Place Storm Sewer**	Tom Jacobs, City of Lenexa P 913.477.7644 tjacobs@lenexa.com	12350 W. 87th St. Pkwy Lenexa, KA 66215	Danny Brown	Randy Mather	CIPP - KS	6/25/2018	$1,110,356.50	100%	6280	15, 18, 18x21, 24, 28x20 30, 36, 38x24, 42, 48, 54
17082.00	**San Francisco, CA 1064J Second St. Streetscape Improvements**	David Butler, Sub to M Squared Construction, Inc. P 415.661.6902 david@msquaredconstruciton.com	1278 20th Ave. Suite C San Francisco, CA 94122	Jarmann Frazer	Todd Chalk	CIPP - CA	10/22/2018	$276,910.00	100%	23	3'x5', 18

SAK Construction Completed Project List

VP Job #	Project Name	Owner's Contact Information	Address	Superintendent	Project Manager	Type	Completed Date	Completed Amount	Percent Complete	Footage Complete	Diameters
17084.00	**St. Louis, MO IR2018, Contract A, 20993**	Steve Welnick, Metropolitan STL Sewer District P 314.768.6378 swelnick@stlmsd.com	2350 Market Street St. Louis, MO 63101	Scott Hoffman	Travis Jerrels	CIPP - MO	2/12/2019	$1,489,314.50	100%	7424	8, 18, 24x36, 36x48 , 36x54
17085.00	**Manila, AR Contract #2, Sewer Repair / Replacement**	John Burgelin (P.E.), City of Manila P 573-727-9666 jpburgelin@hornershifrin.com	PO Box 895 Manila, AR 72442	Jeff Hirtz	Nick Pryor	CIPP - AR	11/30/2017	$20,000.00	100%	3270	8: 3270
17086.00	**Shreveport, LA Jewella Ave & Clarke St. Area Sanitary Sewer Improvements**	Contact Name, Sub to Pulley Construction, Inc. Do not have contact info per Dan S. 1/22/20	912 Mallard Bend Bossier City, LA 71111	TBD	Dan Swidrak	CIPP - LA	12/30/2017	$61,700.00	100%	830	8: 235, 12: 595
17087.00	**Kansas City, MO 81000689 & 690/1358 Line Creek**	John Dougherty, Sub to Kissick Construction Co., Inc. P 816.363.5530 jdougherty@kissickco.com	8131 Indiana Ave. Kansas City, MO 64132	Danny Brown	Randy Mather	CIPP - MO	2/15/2019	$772,693.00	100%	16367	8: 10334, 10: 592, 12: 838, 15: 2048, 18: 1126, 24: 1192, 27: 237
17088.00	**Kansas City, MO 81000704/1343, Neighborhood Brush Creek**	John Dougherty, Sub to Kissick Construction Co., Inc. P 816.363.5530 jdougherty@kissickco.com	8131 Indiana Ave. Kansas City, MO 64132	Danny Brown	Randy Mather	CIPP - MO	4/15/2019	$772,448.00	100%	43000	8: 15500, 10: 16900, 12: 10600
17089.00	**Oak Grove, MO 2017 CIPP Lining**	Ryan Ratcliff, City of Oak Grove P 816.690.3773 rratcliff@cityofoakgrove.com	1300 Broadway Oak Grove, MO 64075	Danny Brown	Randy Mather	CIPP - MO	5/14/2018	$178,778.00	100%	6295	8: 6295
17090.00	**Blair, NE Sanitary Sewer & Storm Sewer Pipe Lining**	Allen Shoemaker, City of Blair P 402.426.4191 ars@blairnebraska.org	218 S 16th St. Blair, NE 68008	Danny Brown	Randy Mather	CIPP - NE	5/22/2018	$51,809.00	100%	437	18: 437
17091.00	**Washington, DC 15-03, 2101 Champlain St.**	Chris Chacey, Sub to L.F. Jennings, Inc. P 703.531.2312 cchacey@lfjennings.com	407 N. Washington St. Suite 200 FalLump Sum Church, VA 2204617	Chad Rusher	Bob Quackenbush	CIPP - DC	11/20/2017	$27,631.00	100%	178	12: 178
17093.00	**Baltimore, MD SC974 Repairs of Sanitary Sewer Mains Zone B**	Eric Brown, City of Baltimore P 410.396.3440 eric.brown@baltimorecity.gov	Abel Wolman Municipal Building, 6th Floor 200 N. Holliday Street Baltimore, MD 21202	Chad Rusher	Travis Ewing	CIPP - MD	1/23/2020	$6,765,183.95	100%	11640	4: 290, 6: 8750, 10: 1750, 15: 300, 21: 550
17094.00	**Anderson, CA CIPP 48" Irrigatin Pipe, Olinda Rd.**	T White, Anderson-Cottonwood Irrigation District P 530. 209.1654 twhite@andersoncottonwoodirrigationdistrict.org	2810 Silver Street Anderson, CA 96007	Jarmann Frazer	Todd Chalk	CIPP - CA	2/6/2018	$186,200.00	100%	140	48
17095.00	**Chamois, MO Wastewater Treatment Sys**	Tony Miller, Sub to Mid-State Pipeline Maintenance, LLC P 573-619-1864 midstate.tm@hotmail.com	709 Belair St. Belle, MO 65013	Jeff Hirtz	Nick Pryor	CIPP - MO	1/22/2018	$79,297.00	100%	2729	8: 427, 10: 2302
17096.00	**Robinson, IL Marathon Reginery**	Alan Lake, Sub to HydroChemPSC P 618-553-9155 alan.lake@hydrochempsc.com	PO Box 7601 Springfield, OH 45501	Jeff Hirtz	Nick Pryor	CIPP - IL	1/31/2018	$103,750.00	100%	93	24: 93
17097.00	**San Antonio, TX East Sewershed, CO-00147-01, 16-4520**	Luis Gonzalez, San Antonio Water System P 210-233-2909 luis.gonzalez@saws.org	2800 U.S. Hwy 281 North San Antonio, TX 78298-2449	James Bower	Brian Ackerman	CIPP - TX	7/6/2019	$11,402,996.90	100%	29120	30, 36, 42
17098.01	**Pima County, AZ Work Order #1**	Guillermo Aguirre, Sub to KE&G Construction P 520.748.0188 gaguirre@kegtus.com	1601 Paseo San Luis, Suite 202 Sierra Vista, AZ 85635	Gary Rodgers	David Burbank	CIPP - AZ	12/22/2017	$107,972.80	100%	2709	8: 1757, 10: 500, 15: 452
17098.02	**Pima County, AZ Work Order #2**	Guillermo Aguirre, Sub to KE&G Construction P 520.748.0188 gaguirre@kegtus.com	1601 Paseo San Luis, Suite 202 Sierra Vista, AZ 85635	Gary Rodgers	David Burbank	CIPP - AZ	3/29/2018	$406,056.20	100%	11287	8: 9291, 10: 100, 12: 1738, 15: 158
17098.03	**Pima County, AZ Work Order #3**	Guillermo Aguirre, Sub to KE&G Construction P 520.748.0188 gaguirre@kegtus.com	1601 Paseo San Luis, Suite 202 Sierra Vista, AZ 85635	Gary Rodgers	David Burbank	CIPP - AZ	5/25/2018	$287,956.00	100%	7990	8: 6033, 10: 1326, 12: 631
17098.04	**Pima County, AZ Work Order #4**	Guillermo Aguirre, Sub to KE&G Construction P 520.748.0188 gaguirre@kegtus.com	1601 Paseo San Luis, Suite 202 Sierra Vista, AZ 85635	Gary Rodgers	David Burbank	CIPP - AZ	10/19/2018	$133,699.20	100%	2963	8: 1242, 10: 437, 12: 386, 15: 898
17098.05	**Pima County, AZ Work Order #5**	Guillermo Aguirre, Sub to KE&G Construction P 520.748.0188 gaguirre@kegtus.com	1601 Paseo San Luis, Suite 202 Sierra Vista, AZ 85635	Gary Rodgers	David Burbank	CIPP - AZ	8/18/2020	$504,805.00	100%	14613	8: 12822, 10: 745, 12: 1046
17098.06	**Pima County, AZ Work Order #6**	Guillermo Aguirre, Sub to KE&G Construction P 520.748.0188 gaguirre@kegtus.com	1601 Paseo San Luis, Suite 202 Sierra Vista, AZ 85635	Gary Rodgers	David Burbank	CIPP - AZ	9/6/2019	$173,278.00	100%	4258	8: 2947, 10: 1119, 12: 192
17098.07	**Pima County, AZ Work Order #7**	Guillermo Aguirre, Sub to KE&G Construction P 520.748.0188 gaguirre@kegtus.com	1601 Paseo San Luis, Suite 202 Sierra Vista, AZ 85635	Gary Rodgers	David Burbank	CIPP - AZ	6/24/2020	$630,958.00	100%	21520	6: 82, 8: 19508, 10: 1817, 12: 113
17098.08	**Pima County, AZ Work Order #8**	Guillermo Aguirre, Sub to KE&G Construction P 520.748.0188 gaguirre@kegtus.com	1601 Paseo San Luis, Suite 202 Sierra Vista, AZ 85635	Garrick Rodgers	David Burbank	CIPP - AZ	6/9/2021	$157,773.00	100%	4465	8: 4177, 10: 288
17099.00	**San Antonio, TX San Pedro Creek Improvements Project CIPP for Danaged 27" Brick Sewer Main**	Matt Riveria, Sub to D Guerra Construction P 210-912-4600 mathew@dguerraconstruction.com	9810 FM 969 Austin, TX 78724	James Bower	Brian Ackerman	CIPP - TX	1/21/2018	$116,000.00	100%	180	27: 180
17100.00	**Eugene, MO Lake Carmel Lining**	Bob Goeltz, Missouri American Water P 314-996-2308 robert.goeltz@amwater.com	727 Craig Road St. Louis, MO 63141	Jeff Hirtz	Nick Pryor	CIPP - MO	1/12/2018	$47,646.00	100%	918	8: 918
17101.00	**Weston, FL Cleveland Clinic**	Alex Quevedo, Sub to Acosta Tractors, Inc. P 786-348-6090 aquevedo@acostatractors.com	11986 NW 97th Ave Hialaah Gardens, FL 33018	Tyler Partridge	Stan Krause	CIPP - FL	1/5/2018	$28,000.00	100%	200	18: 200
17102.00	**Seabrook Island, SC Stormwater Rehab**	Mike Fleury, Seabrook Island Property Owners Association (SIPOA) P 702-271-7630 mfleury@carollo.com	1202 Landfall Way Johns Island, SC 29455	Tommi Botti	Deborah Bartley	CIPP - SC	5/30/2018	$1,167,302.99	100%	9368	12, 15, 18, 21, 24, 30, 32, 36
17103.00	**Bonner Springs, KS CIPP 2017**	Laura Munro, City of Bonner Springs P 913.422.7570 lmunro@bonnersprings.org	205 E. 2nd St. Bonner Springs, KS 66012	Jeff Hirtz	Nick Pryor	CIPP - KS	3/12/2019	$136,378.00	100%	4474	8: 3924, 24: 550
17104.00	**Tucson, AZ Gladden Farms Block 7 & 13 Project #17-064**	Todd Adams, Sub to Borderland Construction Company, Inc. P 520.623.0900 t.adams@borderland-inc.com	P.O. Box 27406 Tucson, AZ 85726-7406	Gary Rodgers	David Burbank	CIPP - AZ	1/13/2018	$15,500.00	100%	56	8: 56

SAK Construction Completed Project List

VP Job #	Project Name	Owner's Contact Information	Address	Superintendent	Project Manager	Type	Completed Date	Completed Amount	Percent Complete	Footage Complete	Diameters
17105.01	**Kansas City, MO City-Wide Sewer Main Rehabilitation - Renewal 1**	Paul South, Kansas City Water Services P 816.513.0263 paul.south@kcmo.gov	4800 E. 63rd St. Kansas City, MO 64130	Danny Brown	Brent Adams	CIPP - MO	4/30/2020	$7,500,000.00	100%	61546	8, 10, 12, 15, 18, 21, 24, 27, 30, 33, 36, 42, 46, 66
17105.02	**Kansas City, MO City-Wide Sewer Main Rehabilitation - Renewal 2**	Paul South, Kansas City Water Services P 816.513.0263 paul.south@kcmo.gov	4800 E. 63rd St. Kansas City, MO 64130	Danny Brown	Brent Adams	CIPP - MO	12/24/2021	$7,499,999.23	100%	53467	8, 10, 12, 15, 18, 21, 24, 27, 30, 33, 36, 42, 48, 60, 66
17106.00	**Wyandotte County, KS 2017 Sanitary Sewer R&R #1**	Kris Finger, Unified Government of Wyandotte County P 913.573.5422 kfinger@wycokck.org	701 N. 7th St. Kansas City, KS 66101	Jeff Hirtz	Nick Pryor	CIPP - KS	3/31/2020	$1,173,391.33	100%	22896	8, 10, 12, 15, 18, 21, 24, 36, 48
17107.00	**Henderson, NV 1334, Mona Lane**	Tim Parks, Sub to Las Vegas Paving Corp P 702-229-2178 tparks@lasvegasnevada.gov	4420 S. Decatur Blvd. Las Vegas, NV 89103	Andrew Johnson	Brian Ackerman	CIPP - NV	3/30/2018	$427,805.00	100%	8199	12: 6367, 15: 1832
17108.00	**Augusta, KS Sanitary Sewer Rehabilitation Basin "A"**	Eric Burris, City of Augusta P 316-775-4535 eburris@augustagov.org	113 E. 6th Ave. Augusta, KS 67010	Jeff Hirtz	Nick Pryor	CIPP - KS	12/31/2019	$1,790,876.45	100%	31785	6: 1538, 8: 30219, 12: 28
18001.00	**Decatur, IL 2017 SE 36" Sewer Rehab**	Don Miller, Sanitary District of Decatur P 217.422.6931 DonM@sddcleanwater.org	501 Dipper Lane Decatur, IL 62522	Jason Laney	Nick Pryor	CIPP - KS	9/30/2018	$1,179,613.00	100%	6964	36, 48
18002.00	**Kansas City, MO Blue River South Areas 4 & 5 - I/I Reduction Project - Phase 1**	John Dougherty, Sub to Kissick Construction Co., Inc. P 816.363.5530 jdougherty@kissickco.com	8131 Indiana Ave. Kansas City, MO 64132	Danny Brown	Randy Mather	CIPP - KS	1/22/2019	$671,936.45	100%	25791	8: 24226, 10: 1419, 12: 146
18003.00	**Wentzville, MO Sewer Main Lining**	John Gripentrop, City of Wentzville P 636-327-5102 joohn.gripentrog@wentxvillemo.org	310 W Pearce Blvd Wentzville, MO 63385	Jeff Hirtz	Nick Pryor	CIPP - MO	8/31/2018	$146,611.60	100%	778	8: 778
18004.00	**Rose Hill, KS 2017 Sanitary Sewer Rehab**	Jeff Murphy, Sub to Nowak Construction Company P 316-794-8898 jeff@nowakconstruction.com	200 S Goddard Rd P.O. Box 218 Goddard, KS 67052	Jeff Hirtz	Nick Pryor	CIPP - KS	5/31/2018	$34,437.00	100%	1164	8: 1164
18005.00	**Plant City, FL 1703 B, Thonotosassa Rd, Sanitary Sewer**	Lyudmila Gassaway, City of Plant City P 813.365.4929 lgassaway@plantcitygov.gov	302 W Reynolds St. Plant City, FL 33563	Angie Miller	Stan Krause	CIPP - FL	4/20/2018	$24,990.00	100%	70	15: 70
18006.00	**St. Louis, MO Harlem-Baden Relief Phase IV (Herbert)**	Mike Bates, Sub to Bates Utility Company P 314.575.0311 mbates@batesutility.net	841 Westwood Ind Park Dr. Weldon Spring, MO 63304	Alan Stuhlsatz	Travis Jerrels	CIPP - MO	2/25/2019	$198,050.90	100%	2850	10: 1049, 12: 860, 21: 316, 27: 625
18007.00	**Caltrans, CA 03-3H7604; T&M-Emergency Work; Diamond Springs Culvert**	Danny Warren, Sub to Teichert Construction P 559.647.5229 dwarren@teichert.com	4401 Duluth Avenue Rocklin, CA 95765	Jarmann Frazer	Todd Chalk	CIPP - CA	2/9/2018	$48,647.83	100%	323	18: 323
18008.00	**Overland Park, KS Titan, 17-118-01, Corporate Med**	John Dougherty, Sub to Kissick Construction Co., Inc. P 816.363.5530 jdougherty@kissickco.com	8131 Indiana Ave. Kansas City, MO 64132	Danny Brown	Randy Mather	CIPP - KS	5/14/2018	$8,150.00	100%	210	8: 210
18009.00	**Las Vegas, NV 12595, 727-Rapid Response**	Joe Bustos, Sub to Las Vegas Paving Corp. P 702.251.5800 joe.bustos@lasvegaspaving.com	4420 S. Decatur Blvd. Las Vegas, NV 89103	Andrew Johnson	Leo Calvario	CIPP - NV	2/28/2018	$56,300.00	100%	161	15: 161
18011.00	**Willow Grove, PA 2018 Collection System CIPP**	Anthony Price, Upper Moreland-Hatboro Joint Sewer Authority P 215.368.3375 aprice@eema-inc.com	2875 Terwood Road Willow Grove, PA 19090	Josh Grote	Travis Ewing	CIPP - PA	8/5/2018	$135,946.95	100%	4500	8: 4500
18012.00	**Belton, MO 30", 27", and 18" Interceptor Lining**	Michael Christopher, City of Belton P 816.331.4331	506 Main St. Belton, MO 64012	Danny Brown	Cory Street	CIPP - MO	7/1/2019	$1,349,041.40	100%	14298	8: 489, 12: 1945, 18: 2837, 27: 5598, 30: 3429
18013.00	**Lyons, KS Municipal Sewer Line Project 2018**	Chris Veatch, City of Lyons P 620.257.3054	201 West Main Lyons, KS 67554	Jeff Hirtz	Nick Pryor	CIPP - KS	6/30/2018	$39,500.00	100%	700	8: 700
18014.00	**Kansas City, MO Fountain**	Brian Turner, Sub to Rodriguez Mechanical Contractors P 913.281.1814 brian@rmckc.com	541 South 11th Street Kansas City, MO 66105	Danny Brown	Randy Mather	CIPP - MO	4/18/2018	$21,000.00	100%	40	24: 40
18015.04	**Eglin Air force Base, FL ASUS East Coast, OS 19597**	Jason Drayer, Sub to Emerald Coast Utility Services, Inc. P 850-324-2595 Jason.Drayer@asusinc.com	608 Range Road Eglin AFB, Fl 32542	Brett Rae/Tyler Partridge	Deborah Bartley	CIPP - FL	4/14/2020	$1,219,280.85	100%	32837	8: 29309, 10: 2312, 12: 1216
18016.00	**Kansas City, MO Englewood Blvd.**	Alan Danielson, Sub to VF Anderson P 913.208.4457 adanielson@gmail.com	19209 East 231st St. Harrisonville, MO 64701	Danny Brown	Randy Mather	CIPP - MO	5/18/2018	$57,455.50	100%	497	18: 225, 21: 272
18018.00	**Hutchinson, KS Storm Sewer**	Jeff Shaw, Sub to APAC P 620.662.2112 Jeff.Shaw@apac.com	1600 N. Lorraine, Suite 100 Hutchinson, KS 67501	Jeff Hirtz	Nick Pryor	CIPP - KS	7/31/2018	$70,976.10	100%	858	18: 858
18019.00	**Las Vegas, NV Sewer Rehab Group A**	Tim Parks, Sub to Las Vegas Paving Corp P 702-229-2178 tparks@lasvegasnevada.gov	4420 S. Decatur Blvd. Las Vegas, NV 89103	James Bower	Brian Ackerman	CIPP - NV	7/31/2018	$2,543,775.00	100%	8985	18, 33, 45, 51
18021.00	**Washington, DC Low Area Trunk Sewer Rehab**	Peter Tinubu, District of Columbia Water and Sewer Authority P 202-787-4337 peter.tinubu@dcwater.com	5000 Overlook Ave. SW Wshington, DC 20032	Chad Rusher / Josh Grote	Bob Quackenbush	CIPP - DC	7/10/2021	$8,321,837.76	100%	5550	30, 42
18022.00	**Griffith, IN Sanitary Interceptor Sewer Improvements**	Rick Konopasek, Town of Griffith P 219.924.3838 rick.konopasek@griffith.in.gov	111 North Broad St Griffith, IN 46319	Bill Siebert	Chris Vogt	CIPP - IN	6/1/2019	$3,992,949.25	100%	13090	36, 42
18023.00	**Fairfield, IA 2018 Sanitary Sewer CIPP Lining**	Melanie CarLump Sumon, City of Fairfield P 641.472.6193 mcarLump Sumon@fairfieldiowa.gov	118 South Main St. Fairfield, IA 52556	Jeff Hirtz	Cory Street	CIPP - IA	7/22/2018	$135,255.00	100%	3984	8: 2695, 12: 731, 18: 558
18024.00	**Caltrans, CA 033E0504, Install Culvert Lines**	Phil Zink, State of CA Dept of Transportation P 530.346.7996 phil.zink@dot.ca.gov	1727 30th St. Sacramento, CA 95816	Andrew Johnson	Todd Chalk	CIPP - CA	9/11/2018	$1,204,143.78	100%	2050	18, 24, 30, 36, 42, 54
18025.00	**Manhattan, KS SS1801, 2018 CIPP Sanitary Sewer**	Norm Francis, City of Manhattan P 785.587.4583 francisn@cityofmhk.com	1101 Poyntz Ave. Manhattan, KS 66502	Jeff Hirtz	Nick Pryor	CIPP - KS	7/31/2018	$485,507.10	100%	21327	8: 20382, 10: 945
18026.00	**Ladue, MO St. Louis Country Club - 8" SS CIPP Lining**	Tim Burch, St. Louis Country Club P 314.650.6891 tim.burch@stlouiscountryclub.org	400 Barnes Rd St. Louis, MO 63124	Alan Stuhlsatz	Travis Jerrels	CIPP - MO	4/9/2019	$77,508.80	100%	1002	8: 663, 15: 339
18027.00	**Concord, NC Sewer CIPP Lining Contrat 2018**	Rick Blatt, City of Concord P 704.920.5403 rblatt@concordnc.gov	PO Box 308 Concord, NC 28026	Angie Miller	Stan Krause	CIPP - NC	12/1/2018	$795,315.00	100%	25721	6: 407, 8: 21423, 10: 3325, 15: 566

SAK Construction Completed Project List

VP Job #	Project Name	Owner's Contact Information	Address	Superintendent	Project Manager	Type	Completed Date	Completed Amount	Percent Complete	Footage Complete	Diameters
18028.00	**Los Angeles County, CA 5105, San Jose Creek**	Christian Alarcon, County Sanitation Districts of Los Angeles County 562.908.4288 X1621 CAlarcon@lacsd.org	1955 Workman Mill Road Whittier, CA 90607	James Bower	Leo Calvario	CIPP - CA	9/15/2019	$6,195,523.95	100%	7210	21, 24, 60, 63
18029.00	**Bonner Springs, KS 2018 Pipe Lining**	Ron Wyatt, City of Bonner Springs P 913.422.8117 rwyatt@bonnersprings.org	PO Box 38 205 East Second St. Bonner Springs, KS 66012	Jeff Hirtz	Nick Pryor	CIPP - KS	3/28/2019	$83,484.50	100%	3791	8: 3791
18030.00	**Orinda, CA 3985, 2018 Measures J&L Pvmt**	Tom Warner, Sub to Bay Cities Paving & Grading, Inc. P 925.446.6030 twarner@baycities.us	P.O. Box 6227 Concord, NC 94524-6227	Andrew Johnson	Todd Chalk	CIPP - CA	11/30/2018	$807,655.35	100%	3638	10, 12, 12x18, 13x18, 15, 15x24, 16x28, 18, 24, 30, 35x60, 36
18031.00	**Dyersburg, TN Sanitary Sewer Rehab #4**	Scott Ball, City of Dyersburg P 731-478-7689 sball@dyersburgtn.gov	435 U.S. Hwy 51 South Dyersburg, TN 38024	Glenn Spears	Deborah Bartley	CIPP - TN	8/31/2018	$1,522,876.90	100%	34514	8: 13370, 10: 4226, 12: 4261, 15: 6903, 18: 5654, 24: 100
18032.00	**Caltran, CA Hwy 49, 18-807**	Mike Gourley, Sub to George Reed, Inc. P 209.523.0734 mike.gourley@gerogereed.com	P.O. Box 4760 Modesto, CA 95352-4760	Andrew Johnson	Todd Chalk	CIPP - CA	6/11/2018	$165,965.00	100%	200	36, 48
18033.00	**Sioux Falls, SD 2018 CIPP Sewer Lining & MH Rehab**	John Osman, City of Sioux FalLump Sum P 605.368.8640 josman@siouxfalLump Sum.org	224 West Ninth Street Sioux Falls, SD 57117-7402	Jason Laney	Cory Street	CIPP - SD	9/1/2018	$1,942,527.55	100%	5984	6: 442, 10: 994, 18: 68, 24: 3329, 36: 1152
18034.00	**Lenexa, KS Storm Drainage Repairs Monrovia St., Rhodes Cir, Hauser St.**	Jim Walker, Sub to Blue Nile Contractors, Inc. P 816.505.1302 Contact Email	601 Spratley St. Birmingham, MO 64161	Danny Brown	Randy Mather	CIPP - KS	7/15/2018	$189,588.00	100%	1023	18, 24, 30, 36, 42, 48
18035.00	**New Haven, MO Trenchless Reconstruction of Sanitary Sewers**	Peter Otten, City of New Haven P 573.237.3572 Peter.Otten@newhavenmo.org	P.O. Box 236 New Haven, MO 63068	Jeff Hirtz	Cory Street	CIPP - MO	6/30/2018	$42,304.50	100%	1411	6: 977, 8: 434
18036.00	**St. Paul, MN Metropolitan Council Contract Number 17P030, Project Number 807635**	Kim Sanders, Metropolitan Council P 651.602.4616 kimberly.sanders@metc.state.mn.us	390 Robert Street North Saint Paul, MN 55101	Jason Laney	Cory Street	CIPP - MN	4/1/2019	$2,501,744.27	100%	3543	36, 42
18037.00	**Upper Marlboro, MD Marlboro Ridge**	Ryan Webb, Sub to Delmarva Site Development, Inc. 443.292.8083 rwebb@delmarvasite.com	2200 Defense Highway Suite 107 Crofton, MD 21114	Chad Rusher	Bob Quackenbush	CIPP - MD	6/22/2018	$66,133.43	100%	400	24: 400
18038.00	**Phoenix, AZ COP SS Emergency**	Dan Broderick, Sub to Achen-Gardner Engineering, LLC P 480.940.1300 dbroderick@achen.com	550 S. 79th St. Chandler, AZ 85226	James Bower	David Burbank	CIPP - AZ	6/10/2018	$54,720.00	100%	44	48
18039.00	**Avondale, AZ SW 1356**	Kyle Foley, Sub to B & F Contracting, Inc. P 520.207.8228 kfoley@bfcontracting.com	11011 N. 23rd Ave. Phoenix, AZ 85029	James Bower	David Burbank	CIPP - AZ	6/29/2018	$239,758.00	100%	1542	30: 1542
18041.00	**San Antonio, TX Eastern Sewershed IV, CO-00149-01, 17-4527**	Terri Ruckstuhl, San Antonio Water System P 210.233.3534 Terri.ruckstuhl@saws.org	2800 U.S. Hwy 281 North P.O. Box 2449 San Antonio, TX 78298	James Bower	Brian Ackerman	CIPP - TX	7/23/2019	$3,812,112.32	100%	14562	24, 27, 30, 42
18042.00	**Johns Island, SC Seabrook Island Golf Club**	Sean Hardwick, Sub to Seabrook Island Club P Contact Phone Number seanhardwick@gmail.com	3772 Seabrook Island Rd. Johns Island, SC 29455	Michael Friend	Deborah Bartley	CIPP - SC	8/20/2018	$208,694.60	100%	695	15: 318, 21: 22, 22: 197, 28: 158
18043.00	**Warrensburg, MO 2018 Sewer Main Lining**	Jason McCarty, City of Warrensburg P 660.262.4662 jason.mccarty@warrensburg-mo.com	102A S. Holden St. Warrensburg, MO 64093	Jeff Hirtz	Nick Pryor	CIPP - MO	9/30/2018	$59,867.00	100%	2693	8: 2693
18044.00	**Kansas City, KS Sumner Academy Renovation**	Jarrod Warner, Sub to Rodriguez Mechanical Contractors P 913.281.1814 Contact Email	541 South 11th Street Kansas City, MO 66105	Danny Brown	Randy Mather	CIPP - KS	11/14/2018	$24,990.00	100%	462	8: 136, 10: 326
18045.00	**Philadelphia, PA Contract, 183129, Trenchless Sewer Rehabilitation Lining of the SS in Cobbs Creek**	Devndra N. Pandya, City of Philadelphia 215-685-6352 dave.pandya@phila.gov	1401 JFK Boulevard Philadelphia, PA 19102	Chad Rusher	Bob Quackenbush	CIPP - PA	6/6/2020	$6,000,562.77	100%	16930	10: 1421, 12: 6528, 15: 2852, 18: 1288, 42: 3760
18046.00	**Stockton, CA Alexandria Place Sewer Truck Line Rehabilitation (Project No. M15001)**	Rosa Alvarez, City of Stockton P 209.937.8134 rosa.alvarez@stocktongov.com	425 N El Dorado Street Stockton, CA 95202	Jarmann Frazer	Todd Chalk	CIPP - CA	12/30/2019	$4,774,606.92	100%	6058	48", 54"
18047.00	**Caltrans, CA 03-4H0904 Emergency Culvert and Embankment Repairs**	Stephen Muck, Sub to Teichert Construction P 916.645.4863	400 Sunrise Ave. Ste 300 Roseville, CA 95667	Jarmann Frazer	Todd Chalk	CIPP - CA	7/18/2018	$595,050.00	100%	970	24, 30, 36, 54
18048.00	**North Charleston, SC Ashley Interceptor Rehab Phase 8**	Jarred Jones, North Charleston Sewer District P 843.817.8888 jarred.jones@ncsd.sc.gov	PO Box 63009 7225 Stall Rd. North Charleston, SC 29419	Glenn Spears	Deborah Bartley	CIPP - SC	2/16/2019	$2,108,847.30	100%	4644	42
18049.00	**Washington, DC GBD JV 17 Mavy IDIQ**	Jamaal Charlton, Sub to Anchor Construction Corporation 202.903.5005 jcharlton@aonchorconst.com	2254 25th Place, NE Washington, DC 20018	Chad Rusher	Bob Quackenbush	CIPP - DC	6/20/2018	$59,000.00	100%	130	30: 130
18050.00	**Jefferson City, MO Highland Dr., 180505**	Darrell Kolb, Sub to Stockman Construction Corp. P 573.635.1316 dak@stockmancc.com	2021 Idlewood Road Jefferson City, MO 65109	Jeff Hirtz	Nick Pryor	CIPP - MO	9/30/2018	$15,579.36	100%	279	8: 279
18051.00	**Jefferson City, MO Highland Dr., 180505**	Darrell Kolb, Sub to Stockman Construction Corp. P 573.635.1316 dak@stockmancc.com	2021 Idlewood Road Jefferson City, MO 65109	Jeff Hirtz	Nick Pryor	CIPP - MO	9/30/2018	$18,427.20	100%	330	8: 330
18052.00	**Jefferson City, MO Highland Dr., 180505**	Darrell Kolb, Sub to Stockman Construction Corp. P 573.635.1316 dak@stockmancc.com	2021 Idlewood Road Jefferson City, MO 65109	Jeff Hirtz	Nick Pryor	CIPP - MO	9/30/2018	$60,693.00	100%	1141	8: 1141
18053.00	**Jefferson City, MO Highland Dr., 180505**	Darrell Kolb, Sub to Stockman Construction Corp. P 573.635.1316 dak@stockmancc.com	2021 Idlewood Road Jefferson City, MO 65109	Jeff Hirtz	Nick Pryor	CIPP - MO	9/30/2018	$25,500.00	100%	187	8: 187
18054.00	**Lawrence, KS 2018 Sanitary Sewer Rehab**	Nicholas Hoyt, City of Lawrence - Utilities Dept. P Contact Phone Number Contact Email	6 East Sixth St. Lawrence, KS 66044	Danny Brown	Randy Mather	CIPP - KS	12/19/2019	$1,668,087.05	100%	64467	8: 49495, 10: 6354, 12: 8298, 15: 320
18055.00	**Indianapolis, IN CEG PR02, Pleasant Run, 1318023**	Alan Dale, Sub to Bowen Engineering Corporation P 317.596.4686 adale@bowenengineering.com	8802 North Meridian St. Indianapolis, IN 46260	Bill Siebert	Chris Vogt	CIPP - IN	7/29/2018	$228,187.44	100%	295	33: 295

SAK Construction Completed Project List

VP Job #	Project Name	Owner's Contact Information	Address	Superintendent	Project Manager	Type	Completed Date	Completed Amount	Percent Complete	Footage Complete	Diameters
18056.00	**Los Gatos, CA University Ave ACP Sewer Rehab**	Alan Kam, West Valley Sanitation District P 408.385.3030 Akam@westvalleysan.org	100 East Sunnyoaks Avenue Campbell, CA 95008	Jarmann Frazer	Todd Chalk	CIPP - CA	8/15/2019	$2,571,319.45	100%	9109	16: 6944, 18: 2165
18057.00	**Phoenex, AZ Sun City Sewer Main Rehab Project 5**	Marc Allen, EPCOR Water Arizona Inc. P 623.445.2451 mallen@epcor.com	2355 W. Pinnacle Peak Rd. Suite 300 Phoenix, AZ 85027	Gary Rodgers	David Burbank	CIPP - AZ	10/26/2018	$404,487.00	100%	2441	15: 2441
18058.00	**Phoenex, AZ Sun City Camino Del Sol**	Marc Allen, EPCOR Water Arizona Inc. P 623.445.2451 mallen@epcor.com	2355 W. Pinnacle Peak Rd. Suite 300 Phoenix, AZ 85027	Gary Rodgers	David Burbank	CIPP - AZ	12/21/2018	$434,220.20	100%	4635	12: 3328, 15: 1307
18059.00	**Fort Leavenworth, KS Pope Avenue Sewer**	Contact Name, Sub to Rodriguez Mechanical Contractors P Contact Phone Number Contact Email	541 South 11th Street Kansas City, MO 66105	Danny Brown	Randy Mather	CIPP - KS	8/31/2018	$12,000.00	100%	213	6: 213
18060.00	**San Antonio, TX 2018 IPP Small Pipe Diameter Package**	Luis Gonzalez, San Antonio Water System P 210.233.2909 luis.gonzalez@saws.org	2800 U.S. Hwy 281 North San Antonio, TX 78298	James Bower	Brian Ackerman	CIPP - TX	9/3/2019	$2,184,645.66	100%	17291	6: 184, 8: 12562, 10: 1534, 12: 233, 15: 1964, 18: 814
18061.00	**Jefferson County, MO Phase 7, SS Collection**	Jason Seger, Rock Creek Public Sewer District P 636.461.2578 jasons@rockcreekpsd.com	4133 West Outer Road Arnold, MO 63010	Jeff Hirtz	Nick Pryor	CIPP - MO	4/12/2019	$230,608.05	100%	1195	8: 1195
18062.00	**Lawrence, KS Sanitary Sewer Rehab 1A**	Kevin Black, Sub to Kissick Construction Co., Inc. P 816-363-5530 kblack@kissickco.com	8131 Indiana Ave. Kansas City, MO 64132	Danny Brown	Nick Pryor	CIPP - KS	1/15/2019	$59,101.75	100%	866	6: 213, 8: 653
18063.00	**Las Vegas, NV 2016R3 Annual**	Jake Marshall, Sub to Las Vegas Paving Corp. 702. 251.5800 jake.marshall@lvpaving.com	4420 S. Decatur Blvd. Las Vegas, NV 89103	Fernando Avila	Brian Ackerman	CIPP - NV	2/14/2020	$345,080.00	100%	6869	8: 6543, 10: 326
18064.00	**Osceola, AR Emergency Sewer Rehab**	Tim Jones, City of Oscela P 870.622.5069 tjones045@yahoo.com	303 W. Hale Avenue Osceola, AR 72370	Glenn Spears	Deborah Bartley	CIPP - AR	9/6/2018	$94,085.00	100%	1165	8: 310, 10: 855
18065.00	**Sioux City, IA 2018 Annual Utility Lining**	Justin Pottoroff, City of Sioux City P 712.279.6315 jpottorff@souix-city-org	405 6th Street Sioux City, IA 51102	Jeff Hirtz	Nick Pryor	CIPP - IA	10/3/2018	$131,218.00	100%	4030	8: 3972, 12: 58
18066.00	**Lenexa, KS Brookwood Place Phase II Storm drainage Improvements**	Tom Jacobs, City of Lenexa P 913.477.7644 tjacobs@lenexa.com	17101 W 87th St. Lenexa, KS 66219	Danny Brown	Nick Pryor	CIPP - KS	7/17/2019	$1,115,616.23	100%	4529	15, 18, 21, 24, 30, 36, 42 15x21, 20x28
18067.00	**Westwood Hills, KS Rainbow Blvd Storm Sewer Repair**	Matt Rothermel, Sub to Kissick Construction Co., Inc. P 816.363.5530 mrothermel@kissickco.com	8131 Indiana Ave. Kansas City, MO 64132	Danny Brown	Randy Mather	CIPP - KS	4/15/2019	$109,800.00	100%	120	48
18068.00	**Caltrans, CA 03-4H4504**	Derrick Hiatt, Sub to Hansen Bros. Enterprises P 530.263.2965 dhiatt@gohbe.com	PO Box 1599 Grass Valley, CA 95945	Andrew Johnson	Todd Chalk	CIPP - CA	8/27/2018	$136,942.60	100%	82	24: 82
18070.00	**Lake St. Louis, MO Reconstruction**	Cristin Berendzen, Sub to Sweetens Concrete Services P 636.887.2332 cberendzen@sweetensconcrete.com	207 E. Koenig Wentzville, MO 63385	Alan Stuhlsatz	Travis Jerrels	CIPP - MO	1/23/2019	$46,361.00	100%	179	36: 179
18071.00	**San Francisco, CA 1000007415, Lombard St.**	Chris Wallace, Sub to M Squared Construction, Inc. P 415.661.6902 chris@msquaredconstruction.com	1278 20th Ave. Suite C San Francisco, CA 94122	Brandon Smith	Todd Chalk	CIPP - CA	7/21/2020	$1,572,601.19	100%	50	12, 3' x 5'
18073.00	**Colma, CA CIPP in 24" Storm Drain, Colma Blvd.**	Brad Donohue, Town of Colma P 650.757.7888 bdonohue@colma.ca.gov	1188 El Camino Real Colma, CA 94014	Andrew Johnson	Todd Chalk	CIPP - CA	8/16/2018	$44,900.00	100%	183	24: 183
18074.01	**Fort Riley, KS FRUS1806PCCRFP5, CIPP Phase 1**	Ingrid Kussmaul, ASUS P 785.784.2444 M 785.370.1366 ingrid.kussmaul@asusinc.com	8152 1st Division Road Fort Riley, KS 66442	Danny Brown	Nick Pryor	CIPP - KS	8/26/2019	$1,570,030.50	100%	35030	6: 2655, 8: 21524, 10: 7706, 12: 562, 15: 1203, 21: 1060, 24: 320
18074.02	**Fort Riley, KS FRUS1806PCCRFP5, CIPP Phase 2**	Ingrid Kussmaul, ASUS P 785.784.2444 M 785.370.1366 ingrid.kussmaul@asusinc.com	8152 1st Division Road Fort Riley, KS 66442	Danny Brown	Nick Pryor	CIPP - KS	8/26/2019	$1,732,961.00	100%	36264	6: 3020, 8: 33244
18074.03	**Fort Riley, KS FRUS1806PCCRFP5, CIPP Phase 3**	Greg Rozman, Fort Riley Utility Services, Inc. P 785-802-7023 Gregory.Rozman@asusinc.com	8152 1st Division Road Fort Riley, KS 66442	Jeff Hirtz	Nick Pryor	CIPP - KS	10/10/2019	$1,839,727.72	100%	22221	8: 9632, 10: 4596, 12: 630, 15: 4918, 18: 236, 21: 705, 24: 1504
18074.04	**Fort Riley, KS FRUS1806PCCRFP5, CIPP Phase 4**	Greg Rozman, Fort Riley Utility Services, Inc. P 785-802-7023 Gregory.Rozman@asusinc.com	8152 1st Division Road Fort Riley, KS 66442	Jeff Hirtz	Nick Pryor	CIPP - KS	12/15/2020	$1,352,194.00	100%	32034	8: 27572, 10: 2593, 12: 249, 21: 652, 24: 968
18074.05	**Fort Riley, KS FRUS1806PCCRFP5, CIPP Phase 5**	Greg Rozman, Fort Riley Utility Services, Inc. P 785-802-7023 Gregory.Rozman@asusinc.com	8152 1st Division Road Fort Riley, KS 66442	Jeff Hirtz	Nick Pryor	CIPP - KS	7/30/2021	$1,805,580.00	100%	32578	8: 18473, 10: 505, 12: 3630, 15: 3587, 18: 4898, 21: 1485
18074.06	**Fort Riley, KS 273000149, 20600 OS; CIPP Ph 6**	Greg Rozman, Fort Riley Utility Services, Inc. P 785-802-7023 Gregory.Rozman@asusinc.com	8152 1st Division Road Fort Riley, KS 66442	Jeff Hirtz	Nick Pryor	CIPP - KS	9/21/2023	$1,322,461.00	100%	33554	6: 5672, 8: 22959, 10: 763, 12: 4160
18075.00	**San Antonio, TX Central Sewershed 5, CO-000175-01, 17-4556**	Nathan Virdell, San Antonio Water System (SAWS) P 210-233-3135 nathaniel.virdell@saws.org	2800 U.S. Hwy 281 North San Antonio, TX 78212	James Bower	Brian Ackerman	CIPP - TX	12/17/2019	$2,507,090.02	100%	7672	8: 885, 15: 1123, 18: 1545, 20: 1095, 21: 260, 24: 2764
18077.00	**Creve Coeur, MO City Place 2 CIPP Lining**	Doug Tiemann, Sub to Pickett, Ray & Silver, Inc. P 636.397.1211 dtiemann@prs3.com	22 Richmond Center Court St. Peters, MO 63376	Alan Stuhlsatz	Travis Jerrels	CIPP - MO	9/10/2019	$26,370.00	100%	310	8: 310
18078.00	**Little Rock, AR Spring Valley Manor Drain Improvements**	Ward Padgett, Sub to Burkhalter Technologies 501.539.3004 ward.burkhalterinc@sbcglobal.net	28 Collins Industrial PL N. Little Rock, AR 72113	Glenn Spears	Deborah Bartley	CIPP - AR	9/11/2018	$89,340.00	100%	167	24, 54
18079.00	**Caltrans, CA 03-2F1304, 018-099, Install Sand**	Peter Molinelli, Sub to Martin Brothers Construction P 209.256.1995 pmolinelli@martinbrothers.net	8801 Folsom Blvd., Suite 260 Sacramento, CA 95826	Jarmann Frazer	Todd Chalk	CIPP - CA	10/9/2019	$207,360.00	100%	499	18: 200, 24: 200, 30: 99

SAK Construction Completed Project List

VP Job #	Project Name	Owner's Contact Information	Address	Superintendent	Project Manager	Type	Completed Date	Completed Amount	Percent Complete	Footage Complete	Diameters
18082.00	**Lake St. Louis, MO Woodchuck Dr. Stormwater Lining**	Matthew Kuelker, City of Lake St. Louis P 636-695-4221 mkuelker@lakesaintlouis.com	200 Civic Center Dr. Lake St. Louis, MO	Alan Stuhlsatz	Travis Jerrels	CIPP - MO	11/6/2018	$23,856.00	100%	161	15: 151
18083.00	**Baltimore, MD 25-114152001-S, 1525085**	Will Sigafoose, Sub to Allan Myers P 443-422-4643 will.sigafoose@allanmyers.com	P.O. Box 1310 Worcester, PA 19490	Josh Grote	Bob Quackenbush	CIPP - MD	7/1/2020	$708,746.65	100%	3481	8: 1860, 15: 153, 20: 400, 22: 432, 27: 636
18084.00	**Pinellas Park Renewal 6, Contract 13/014, 2018 Annual**	Dave Floyd, City of Pinellas Park P 727.369.5623 dfloyd@pinellas-park.com	8000 60th Street North Pinellas Park, FL 33781	Angie Miller	Stan Krause	CIPP - FL	6/30/2019	$546,769.46	100%	16954	8: 16954
18085.00	**Caltrans, CA Redwood Complex**	Joe Picard, Sub to Granite Construction P 707.472.6175 joseph.picard@gcinc.com	1324 S. State Street Ukiah, CA 95482	Jarmann Frazer	Todd Chalk	CIPP - CA	10/22/2018	$74,800.00	100%	120	36: 120
18086.00	**San Antonio, TX West Sewershed 1**	Terri Ruckstuhl, San Antonio Water System P 210.233.3534 Terri.ruckstuhl@saws.org	2800 U.S. Hwy 281 North San Antonio, TX 78212	James Bower	Brian Ackerman	CIPP - TX	10/25/2019	$4,499,144.88	100%	7292	54, 66
18087.00	**Phoenix, AZ Camelback & 7th St.**	Hassan Elsaad, SRP P 602.236.4619 hassan.elsaad@srpnet.com	3160 S Alma School Rd Mesa, AZ	Gary Rodgers	David Burbank	CIPP - AZ	1/29/2019	$147,970.00	100%	940	24: 940
18088.00	**San Antonio, TX Multiple Sewershed**	Nathan Virdell, San Antonio Water System P 210-233-3135 nathaniel.virdell@saws.org	2800 U.S. Hwy 281 North San Antonio, TX 78212	James Bower	Roger Terrazas	CIPP - TX	7/14/2020	$22,041,121.14	100%	15421	24, 27, 33, 36, 54, 60, 66, 72, 84
18089.00	**Jefferson City, MO Stockman, Shagbark, Stiefferman, 180906**	Darrell Kolb, Sub to Stockman Construction Corp. P 573.635.1316 dak@stockmancc.com	2021 Idlewood Road Jefferson City, MO 65109	Jeff Hirtz	Nick Pryor	CIPP - MO	12/31/2018	$104,442.00	100%	2361	8: 2361
18090.00	**Murfreesboro, TN SBW, 0917-S05, 2017 Rehab**	Jeramie White, Sub to SBW Constructors, LLC P 615-574-9420 jwhite@sbwconstructors.com	107 Terry Lane Cottontown, TN 37048	Tyler Partridge/ John Glick	Deborah Bartley	CIPP - TN	11/27/2018	$345,046.75	100%	10739	8: 10068, 10: 599, 18: 72
18091.01	**Dekalb County, GA Pkg 5 Bundle 2 CIPP**	Contact Name, Sub to The Renee Group, Inc. P Contact Phone Number Contact Email	3440 Oakcliff Rd Suite 112 Doraville, GA 30340	TBD	Clayton Washburn	CIPP - GA	8/27/2019	$797,413.00	100%	33541	8: 33541
18092.00	**Baltimore, MD Honeywell, DMT-15th St.**	Kevin Wittmeyer, Sub to Jacobs P 973.896.0045 kevin.wittmeyer@jacobs.com	1999 Bryan Street, Suite 1200, Dallas, Texas 75201 , USA |	Jason Laney	Cory Street	CIPP - MD	12/31/2018	$3,605,999.75	100%	2065	84", 90", 96"
18093.00	**Franklin, TN Cartwright Creek Rehab, Grassland Middle School (Do Not Use)**	Kevin Wittmeyer, Sub to Jacobs P 973.896.0045 kevin.wittmeyer@jacobs.com	1999 Bryan Street, Suite 1200, Dallas, Texas 75201 , USA |	Glenn Spears	Deborah Bartley	CIPP - TN	7/8/2019	$12,484.48	100%	25	15: 25
18094.00	**Caltrans, CA Emergency Culvert Hwy 49**	Mike Lorang, Sub to Lorang Brothers Construction, Inc. P 530.346.8150 mike@lorangbrothers.com	1175 S. Auburn St Colfax, CA 95713	Jarmann Frazer	Todd Chalk	CIPP - CA	11/6/2018	$108,400.00	100%	259	18: 97, 24: 162
18095.00	**Fairmont City, IL Cookson SS Rehab Collinsville**	Chad Ross, Village of Fairmont City P 314.241.6300 Contact Email	2601 North 41st St Fairmont City, IL 62201	Alan Stuhlsatz	Travis Jerrels	CIPP - IL	1/17/2019	$55,771.00	100%	329	24: 329
18096.01	**Fort Bliss, TX CIPP VI, RR 2018 - Change Order Work**	Ruben Contreras, Fort Bliss Water Services Co. P 915.564.1332 ruben.contreras@ftbliss.asusinc.com	516A Pleasonton, 3rd, 310N El Paso, TX 79916	Jarmann Frazer	David Burbank	CIPP - TX	2/14/2020	$1,169,579.21	100%	17071	8: 11129, 10: 690, 12: 450, 21: 4802
18097.00	**Rohnert Park, CA Emergency Sewer Pond & Wet Well Lining - Phase A**	Eric Machado, Sub to Machado Bros P 707.763.7715 machadobrothers@msn.com	1005 Spring Hill Road Petaluma, CA 94952	Jarmann Frazer	Todd Chalk	CIPP - CA	11/5/2018	$56,200.00	100%	17	30: 17
18098.00	**Baltimore, MD 1622 Clinton St, SDC 7771-084**	Robert Harrington, Sub to Harrington & Sons P 410.493.6805 reharrington@reharrington.com	300 W. 23rd St. Baltimore, MD 21211	Chad Rusher	Travis Ewing	CIPP - MD	3/8/2019	$50,000.00	100%	245	24: 245
18099.00	**St. Louis, MO Deer Creek I/I**	Steve Welnick, Metropolitan STL Sewer District P 314.768.6378 swelnick@stlmsd.com	2350 Market Street St. Louis, MO 63101	Alan Stuhlsatz	Travis Jerrels	CIPP - MO	10/18/2023	$3,657,838.62	100%	61199	6, 8, 10, 12, 15, 18, 21, 24, 42
18100.00	**Diamond Springs, CA Lake Oaks Senior Mobile Home Community**	Shannon Mainwaring, Lake Oaks Senior Mobile Home Community P 530.676.5541 shannonm@pacbell.net	4280 Patterson Dr. Diamond Springs, CA 95619	Jarmann Frazer	Todd Chalk	CIPP - CA	11/16/2018	$38,500.00	100%	284	15: 284
18101.00	**Conway Springs, KS Bid Package No. 4 - Distribution System Improvements**	Annie Jones, Sub to SB Wyatt Contracting, Inc. P 816.322.6557 sbwyattcontracting@sbwyatt.com	18017 S State Rt Y Belton, MO 64012	Jeff Hirtz	Nick Pryor	CIPP - KS	12/31/2018	$21,712.00	100%	236	8: 236
18102.01	**Port St. Lucie, FL Rehab Gravity Sewers, 2020**	Denzil Brown, City of Port St. Lucie 772.528.4283 dbrown@cityofpsl.com	900 SE Ogden Lane Port St. Lucie, FL 34983	Angie Miller	Stan Krause	CIPP - FL	5/20/2021	$250,065.00	100%	5631	8: 5631
18102.03	**Port St. Lucie, FL Rehab Gravity Sewers, 2022**	Denzil Brown, City of Port St. Lucie 772.528.4283 dbrown@cityofpsl.com	900 SE Ogden Lane Port St. Lucie, FL 34983	Blake Kimball	Stan Krause	CIPP - FL	7/22/2023	$813,265.00	100%	18856	8: 18856
18103.01	**Baltimore, MD 7323 Aviation Blvd, Open Cut Pt Rep**	Jimmy Dell, Sub to JW Dell Company P 410.977.5078 jimmy@jwdell.com	591 Hanover Pike Hampstead, Md. 21074	Jeremy Scalio	Bob Quackenbush	CIPP - MD	7/20/2023	$145,000.00	100%	78850	10: 78850
18103.04	**Baltimore, MD 2020 Release**	Jimmy Dell, Sub to JW Dell Company P 410.977.5078 jimmy@jwdell.com	591 Hanover Pike Hampstead, Md. 21074	Chad Rusher	Bob Quackenbush	CIPP - MD	1/11/2022	$119,326.00	100%	610	12: 113, 15: 497
18104	**Tempe, AZ - 3207101F, Sanitary Sewer Collection Work Area 5**				David Burbank	CIPP - AZ	4/12/2019	$365,459.34	100%	6403	8: 5319, 10: 770, 12: 314
18106.00	**Fort Leavenworth, KS Riverside Sewer CIPP**	Brodey Hansen, Sub to American Water - Military Services P 913-758-9272 keith.hansen@amwater.com	920 E. Warehouse Road Fort Leavenworth, KS 66027	Danny Brown	Nick Pryor	CIPP - MO	2/5/2019	$64,909.00	100%	989	6: 989
18107.00	**San Antonio, TX Multiple Sewershed 5, CO-00237-01, 17-4551**	Estephanie Flores, San Antonio Water System P 210.233.3254 Estephanie.flores@saws.org	2800 U.S. Hwy 281 North San Antonio, TX 78212	James Bower	Brian Ackerman	CIPP - TX	4/15/2020	$5,240,682.96	100%	6461	24, 30, 48, 54, 72
18108.01	**Phoenix, AZ Contract 148532 Small Diameter SS Rehab JOA001**	Michael Brown, City of Phoenix P 602.262.4597 michael.brown@phoenix.gov	200 W Washington St Phoenix, AZ 85003	Gary Rodgers	David Burbank	CIPP - AZ	8/4/2020	$336,654.70	100%	1117	12: 197, 15: 424, 21: 496

SAK Construction Completed Project List

VP Job #	Project Name	Owner's Contact Information	Address	Superintendent	Project Manager	Type	Completed Date	Completed Amount	Percent Complete	Footage Complete	Diameters
18108.02	**Phoenix, AZ Contract 148532 Small Diameter SS Rehab JOA002**	Michael Brown, City of Phoenix P 602.262.4597 michael.brown@phoenix.gov	200 W Washington St Phoenix, AZ 85003	Gary Rodgers	David Burbank	CIPP - AZ	9/5/2020	$659,935.95	100%	10435	8: 6343, 10: 898, 12: 2084, 15: 920, 21: 190
18108.03	**Phoenix, AZ Contract 148532 Small Diameter SS Rehab JOA003**	Michael Brown, City of Phoenix P 602.262.4597 michael.brown@phoenix.gov	200 W Washington St Phoenix, AZ 85003	Gary Rodgers	David Burbank	CIPP - AZ	8/3/2020	$156,902.14	100%	1198	12: 922, 15: 124, 18: 152
18108.04	**Phoenix, AZ 4108JOC167, 148532, JOA004**	Michael Brown, City of Phoenix P 602.262.4597 michael.brown@phoenix.gov	200 W Washington St Phoenix, AZ 85003	Gary Rodgers	David Burbank	CIPP - AZ	8/4/2020	$795,481.74	100%	19787	8: 16540, 12: 1182, 15: 2065
18108.05	**Phoenix, AZ 4108JOC167, 148532, JOA005**	Michael Brown, City of Phoenix P 602.262.4597 michael.brown@phoenix.gov	200 W Washington St Phoenix, AZ 85003	Gary Rodgers	David Burbank	CIPP - AZ	9/30/2021	$1,057,835.70	100%	14451	8, 10, 12, 15, 18, 21
18108.06	**Phoenix, AZ 4108JOC167, 148532, JOA006**	Michael Brown, City of Phoenix P 602.262.4597 michael.brown@phoenix.gov	200 W Washington St Phoenix, AZ 85003	Gary Rodgers	David Burbank	CIPP - AZ	12/15/2021	$688,005.70	100%	8147	8: 4356, 10: 856, 12: 988, 15: 1947
18108.07	**Phoenix, AZ 4108JOC167, 148532, JOA007**	Michael Brown, City of Phoenix P 602.262.4597 michael.brown@phoenix.gov	200 W Washington St Phoenix, AZ 85003	Gary Rodgers	David Burbank	CIPP - AZ	5/21/2022	$1,799,372.43	100%	20870	8: 18195, 10: 388, 12: 2287
18108.08	**Phoenix, AZ 4108JOC167, 148532, JOA008**	Michael Brown, City of Phoenix P 602.262.4597 michael.brown@phoenix.gov	200 W Washington St Phoenix, AZ 85003	Gary Rodgers	David Burbank	CIPP - AZ	1/31/2024	$719,566.54	100%	20870	8: 18195, 10: 388, 12: 2287
18108.09	**Phoenix, AZ 4108JOC167, 148532, JOA009**	Michael Brown, City of Phoenix P 602.262.4597 michael.brown@phoenix.gov	200 W Washington St Phoenix, AZ 85003	Gary Rodgers	David Burbank	CIPP - AZ	6/22/2023	$1,195,098.69	100%	27387	8: 24907, 12: 2480
18108.10	**Phoenix, AZ 4108JOC167, 148532, JOA 010**	Michael Brown, City of Phoenix P 602.262.4597 michael.brown@phoenix.gov	200 W Washington St Phoenix, AZ 85003	Gary Rodgers	David Burbank	CIPP - AZ	1/31/2024	$1,998,560.32	100%	36072	8: 29819, 10: 3446, 12: 873, 15: 1934
18108.11	**Phoenix, AZ 4108JOC167, 148532, JOA 011**	Michael Brown, City of Phoenix P 602.262.4597 michael.brown@phoenix.gov	200 W Washington St Phoenix, AZ 85003	Gary Rodgers	David Burbank	CIPP - AZ	1/31/2024	$579,585.78	100%	7944	8: 6160, 10: 255, 15: 1070, 18: 459
18109.00	**St. Louis, MO Webster Groves Trunk E**	Brad Biderman, Sub to L. Keeley Construction P 314.421.5933 Contact Email	500 S. Ewing Ave. Suite G St. Louis, MO 63103	Alan Stuhlsatz	Travis Jerrels	CIPP - MO	4/26/2019	$12,310.50	100%	283	8: 283
18110.03	**St. Louis, MO FY19, C, 21700, Geopolymer**	Steve Welnick, Metropolitan STL Sewer District P 314.768.6378 swelnick@stlmsd.com	2350 Market Street St. Louis, MO 63101	Jason Laney	Travis Jerrels	CIPP - MO	8/2/2019	$279,175.00	100%	393	96: 393
18111.00	**Kingsport, TN Area B Sewer System**	Matt McKinnon, Sub to Garney Companies P 407.287.8806 mmckinnon@garney.com	4509 W. Stone Dr., Kingsport, TN 37660	Glenn Spears	Deborah Bartley	CIPP - TN	8/17/2020	$2,314,664.00	100%	7858	8, 10, 12, 15, 18, 24, 30, 36
18112.00	**Shawnee, KS 2019 Stormwater Pipe Repair**	Jerry Wiedenmann, Sub to Wiedenmann, Inc. P 816.322.1125 jerry@wiedenmanninc.com	950 N Scott Belton, MO 64012	Jeff Hirtz	Nick Pryor	CIPP - KS	3/28/2019	$341,681.77	100%	3281	15: 525, 18: 446, 21: 842, 24: 834, 27: 384, 30: 218, 36: 32
18113.00	**Trenton, OH MillerCoors Brewery 2018**	Patrick LeClair, Sub to Vortex Industrial Solutions, LLC 616.502.2507 pleclair@vortexcompanies.com	10200 US Hwy 92 E, Tampa, FL 33610	Josh Grote	Bob Quackenbush	CIPP - OH	9/11/2019	$127,514.70	100%	2159	8, 12, 15, 18, 24
18114.00	**Stockton, CA Della St. Sanitary Sewer Rehab**	Ahbid Mohammad, City of Stockton P 209.937.7903 ahbid.mohannad@stocktonca.gov	22 E. Weber Avenue, Room 301 Stockton, CA 95202	Jarmann Frazer	Todd Chalk	CIPP - CA	12/12/2019	$1,289,473.35	100%	1870	33: 1870
18115.00	**Pottstown, PA Limerick Main Waste**	Joe Savo, Sub to Riggs Distler & Company, Inc. 610.872.8896 jsavo@riggsdistler.com	308 Dutton Mill Rd. Brookhaven, PA19015	Josh Grote	Bob Quackenbush	CIPP - PA	7/8/2019	$394,791.67	100%	400	6: 400
18117.00	**Wyandotte County, KS 2018 Sanitary Sewer Rehabilitation Project**	Joe Barnes, Unified Government of Wyandotte P 913.573.1353 jbarnes@wycokck.org	701 N. 7th St. Kansas City, KS 66101	Jeff Hirtz	Nick Pryor	CIPP - KS	1/21/2020	$1,139,532.06	100%	28588	8, 10, 12, 15, 18, 24, 48
18800.01	**Lake St. Louis, MO Lake St. Louis Sewer Improvement Program- Contract 3**	David Mather, PWSD #2 P 636.561.3737 Ext 112 dmather@waterdistrict2.com	100 Water Dr. O'Fallon, MO 63366	Alan Stuhlsatz	Tom Qualls	CIPP - MO	12/5/2018	$28,861.00	100%	589	8: 589
19001.00	**Baltimore, MD 148002420, Honeywell, DMT-15th St.**	Kevin Wittmeyer, Sub to Jacobs P 973.896.0045 kevin.wittmeyer@jacobs.com	1999 Bryan Street, Suite 1200, Dallas, Texas 75201 , USA |	Jason Laney	Ken Sprau	CIPP - MD	3/1/2019	$2,762,986.53	100%	1499	84", 90", 96"
19003.00	**Norco, LA Norco Mfg Complex**	Chris Jones, Sub to Turner Industries Group, LLC P 504.441.4098 cjones@turner-industries.com	15536 River Rd Norco, LA 70079	Jeff Hirtz	Nick Pryor	CIPP - LA	3/8/2019	$289,790.00	100%	200	24: 200
19004.00	**Caltrans, CA 02-4H9204, Delta Fire #1804**	Bill Spoon, Sub to Steve Manning Construction, Inc. P 530.605.5704 bspoon@smci-const.com	PO Box 491660 Redding, CA 96049	Jarmann Frazer	Todd Chalk	CIPP - CA	6/21/2019	$429,120.00	100%	1062	24: 422, 36: 640
19005.00	**Overland Park, KS Shamrock Trading**	Brandon Moris, Johnson County Wastewater P 913.207.5234 Brandon.Morris@jcw.org	4800 Nall Avenue Mission, KS 66202	Danny Brown	Brent Adams	CIPP - KS	6/13/2019	$7,875.00	100%	90	8: 90
19006.00	**Warrensburg, MO 2019 Sanitary Sewer Main Lining**	Jason McCarty, City of Warrensburg P 660.262.4662 jason.mccarty@warrensburg-mo.com	102A S. Holden St. Warrensburg, MO 64093	Jeff Hirtz	Nick Pryor	CIPP - MO	4/30/2019	$68,043.20	100%	3044	8: 3044
19007.00	**Wichita, KS 2019 Sanitary Sewer Rehab**	Jeff Terhune, City of Wichita P 316.268.4046 jterhune@wichita.gov	455 North Main St Wichita, KS 67202	Jeff Hirtz	Nick Pryor	CIPP - KS	9/24/2019	$570,448.00	100%	14006	8: 10888, 10: 169, 15: 1671, 18: 539, 36: 739
19008.00	**Wareham, MA 2018-001 Sewer System Rehab**	Maxwell Silva, Sub to A & W Maintenance, Inc. P 508.947.8539 max@warrenenviro.com	137 Pine Street Middleborough, MA 02346	Chad Rusher	Travis Ewing	CIPP - MA	1/8/2021	$1,282,396.00	100%	8508	18: 2684, 21: 5824
19010.00	**Kansas City, MO Gooseneck Creek-N**	Cody Cook, Sub to Kissick Construction Co., Inc. P 816.363.5530 ccook@kissickco.com	8131 Indiana Ave. Kansas City, MO 64132	Danny Brown	Brent Adams	CIPP - MO	4/29/2020	$2,370,235.25	100%	65664	8, 10, 12, 24
19011.00	**Milwaukee, WI 2018 MillerCoors Brewery Pipe Lining Project**	Patrick LeClair, Sub to Vortex P 616-502-2507 pleclair@vortexcompanies.com	3939 W. Highland Blvd, Milwaukee, WI 53201	Brad Schenning	Chris Vogt	CIPP - WI	7/31/2019	$150,763.80	100%	459	8: 201, 10: 24, 18: 220, 24: 14
19014.00	**St. Louis, MO Mackenzie Public**	Steve Welnick, Metropolitan STL Sewer District P 314.768.6378 swelnick@stlmsd.com	2350 Market Street St. Louis, MO 63101	Alan Stuhlsatz	Travis Jerrels	CIPP - MO	1/6/2023	$5,182,518.55	100%	49091	6, 18, 10, 12, 15, 18, 21, 24, 27, 30, 36, 42, 48
19015.00	**San Francisco, CA WW-634 Various No.3**	Andrew Mellon, Sub to Shaw Pipeline, Inc. P 415.337.0190 andrew@shawpipelineinc.com	150 Executive Park Blvd, Suite 3790 San Francisco, CA 94134	Brandon Smith	Todd Chalk	CIPP - CA	11/19/2019	$1,352,520.00	100%	773	8", 16", 2'x3', 2'-6"x3'-9"

SAK Construction Completed Project List

VP Job #	Project Name	Owner's Contact Information	Address	Superintendent	Project Manager	Type	Completed Date	Completed Amount	Percent Complete	Footage Complete	Diameters
19016.00	**O'Fallon, MO CIPP Project 6-Heritage**	Todd Rasche, Duckett Creek Sanitary District P 636.498.8154 rasche@duckettcreek.com	3550 State Hwy K O'Fallon, MO 63368	Alan Stuhlsatz	Travis Jerrels	CIPP - MO	12/11/2019	$1,123,058.55	100%	57719	8: 57719
19018.00	**Caltrans, CA Placer County near Colfax Contract No. 03-4F2504**	Phil Zink, State of CA Dept of Transportation P 530.346.7796 phil.zink@dot.ca.gov	1727 30th St. Sacramento, CA 95816	Jarmann Frazer	Todd Chalk	CIPP - CA	8/30/2019	$1,496,829.44	100%	2990	18, 24, 30, 42, 48
19019.00	**San Francisco, CA 2937J Various Locations Pavement Renovation No 39 and Sewer Replacement**	Stephen Harty, Sub to Harty Pipelines, Inc. P 415.585.6023 harty.stephen@yahoo.com	4085 19th Avenue San Francisco, CA 94132	Jarmann Frazer	Todd Chalk	CIPP - CA	9/10/2019	$271,225.00	100%	35	16", 3'x5'
19020.00	**Las Vegas, NV 13820, Sewer R & R Group N**	Jake Marshall, Sub to Las Vegas Paving Corp. 702. 251.5800 jake.marshall@lvpaving.com	4420 S. Decatur Blvd. Las Vegas, NV 89103	Fernando Avila	Leo Calvario	CIPP - NV	9/14/2020	$661,476.00	100%	5163	18: 661, 21: 4502
19021.00	**Pacifica, CA Sierra Mtn, Wet Weather Equalization**	Jeff Harris, Sub to Sierra Mountain Construction, Inc. P 209.768.8120 jharris@sierramtn.net	13919 Mono Way Sonora, CA 95370	Jarmann Frazer	Todd Chalk	CIPP - CA	9/11/2019	$61,000.00	100%	250	28: 250
19022.00	**Lexington, KY 2019 Large Diameter CIPP & MH Rehab**	Craig Prater, Lexington-Fayette Urban County Government P 859.425.4226 bprater@lexingtonky.gov	125 Lisle Industrial Drive, Suite 180, Lexington, KY 40511	Glenn Spears	Deborah Bartley	CIPP - KY	9/14/2020	$1,284,160.00	100%	3287	36, 48
19023.00	**Phoenix, AZ Sun City Sewer Project 8**	Marc Allen, EPCOR Water Arizona, Inc. P 623.445.2451 mallen@epcor.com	2355 W. Pinnacle Peak Rd. Suite 300 Phoenix, AZ 85027	Gary Rodgers	David Burbank	CIPP - AZ	12/13/2019	$469,759.26	100%	5895	8: 262, 10: 5140, 15: 493
19024.00	**Lenexa, KS Cedars Storm Drainage**	Scott Wolters, Sub to VF Anderson Builders, LLC P 816.935.9852 vfabuilders@yahoo.com	19209 E 231st Street Harrisonville, MO 64701	Jeff Hirtz	Nick Pryor	CIPP - KS	11/12/2020	$868,584.25	100%	7925	15, 18, 21, 24, 30, 36, 42
19026.01	**Wyandotte County, KS Emergency Repairs**	Joe Barnes, Unified Government of Wyandotte P 913.573.1353 jbarnes@wycokck.org	701 N. 7th St. Kansas City, KS 66101	Jeff Hirtz	Brent Adams	CIPP - KS	1/20/2023	$236,008.80	100%	846	10: 466, 18: 137, 24: 243
19027.00	**Washoe County, NV Phase 1 - CIPP Lining Project**	Megan Sizelove, Washoe County Community Services Dept P 775.328.2316 msizelove@washoecounty.us	1001 E. 9th Street Reno, NV 89520	Jarmann Frazer	Todd Chalk	CIPP - NV	6/20/2019	$1,746,283.00	100%	5629	30: 5629
19028.00	**Hamilton County, TN Lookout Mtn-CW7 2019-424-SRF 2019-425**	Rodney Ashby, Hamilton County Water & Wastewater Treatment Authority P xxx-xxx-xxxx RodneyA@hamiltontn.gov	P.O. Box 8856, Chattanooga, TN 37414	Josh Grote/Tyler Partridge	Deborah Bartley	CIPP - TN	10/29/2020	$3,370,069.18	100%	23370	8: 23370
19029.00	**Tamarac, FL 8" CIPP**	Jerry Robinson, City of Tamarac P 954.821.1582 Jerry.Robinson@tamarac.org	7525 NW 88th Avenue, Tamarac, FL 33321	Angie Miller	Stan Krause	CIPP - TN	5/19/2019	$28,750.00	100%	915	8: 915
19030.00	**Augusta, GA Union Grove Circle Sanitary Sewer**	Sylvester Rosier, Augusta Utilities Department P 706.312.4154 Srosier@augustaga.gov	452 Walker Street Suite 200 Augusta GA 30901	Angie Miller	Stan Krause	CIPP - TN	4/19/2019	$21,851.26	100%	290	8: 290
19031.00	**Kansas City, MO 81000750/1258, 54" N. Southern Rd.**	Alex Ivanescu, City of Kansas City P 816.513.0445 Alex.Ivanescu@kcmo.org	4800 E 63rd St Kansas City, MO 64130	Danny Brown	Brent Adams	CIPP - MO	2/11/2020	$2,347,909.25	100%	3829	54
19033.00	**Manhattan, KS SS1901, 2019 Sanitary Sewer**	Norm Francis, City of Manhattan P 785.587.4583 francisn@cityofmhk.com	1101 Poyntz Ave. Manhattan, KS 66502	Jeff Hirtz	Nick Pryor	CIPP - KS	8/26/2019	$362,159.40	100%	16204	8: 16204
19034.00	**Nashville, TN Overall Creek Harpeth Valley**	Jeff Seal, Sub to Garney Companies P 615.350.7975 "jseal@garney.com"	200 Crutchfield Ave., Nashville, TN 37210	Glenn Spears	Deborah Bartley	CIPP - TN	7/13/2019	$272,000.00	100%	365	48
19035.00	**Mesa, AZ Sewer Rehab Various**	Kyle Foley, Sub to B & F Contracting, Inc. P 520.207.8228 kfoley@bfcontracting.com	11011 N. 23rd Ave. Phoenix, AZ 85029	Gary Rodgers	David Burbank	CIPP - AZ	11/14/2019	$128,147.00	100%	1271	8: 284, 24: 987
19036.00	**Lake St. Louis, MO Lake St. Louis Sewer Improvement Program- Contract 4**	David Mather, PWSD #2 P 636.561.3737 Ext 112 dmather@waterdistrict2.com	100 Water Dr. O'Fallon, MO 63366	Alan Stuhlsatz	Tom Qualls	CIPP - MO	5/24/2019	$159,975.00	100%	898	8: 898
19037.00	**Woodland, CA East Main Pump Station**	Mark Miller, City of Woodland P 530.661.5820 mark.miller@cityofwoodland.org	300 First St. Woodland, CA 95695	Jarmann Frazer	Todd Chalk	CIPP - CA	10/18/2019	$354,221.90	100%	238	54
19038.01	**Trenton, MO 24th & Pleasant Plain Sewer Rehab**	Kenny Ricketts, City of Trenton P Contact Phone Number kricketts@trentonmo.com	1100 Main Street Trenton, MO 64683	Jeff Hirtz	Nick Pryor	CIPP - MO	10/31/2019	$41,769.00	100%	1150	10: 1150
19039.00	**Falls Authority, PA Nottingham Inflow & Infiltration**	John N. Ryba, Township of FalLump Sum Authority P 215.946.6062 jryba@tofa-pa.com	557 Lncoln Highway Fairless HilLump Sum, PA 19030	Neil Soriano	Ken Sprau	CIPP - PA	12/1/2019	$273,025.24	100%	3705	8: 3705
19040.00	**Owensboro, KY 2019-18, CIPP 19-1**	Sean O'Bryan, Regional Water Resource Agency P 270.297.9211 OBRYANSM@rwra.org	2101 Grimes Ave. Owensboro, KY 42303	Glenn Spears	Deborah Bartley	CIPP - KY	12/30/2019	$975,838.30	100%	2835	30,36,42,48
19041.00	**West Manchester Township, PA 2019 Sewer Relining #1**	Steve Cordaro, Sub to Dawood Engineering, Inc. P 717-732-8576 scordaro@dawood.cc	380 East Berlin Road, York, PA 17408	Chad Rusher	Travis Ewing	CIPP - PA	12/23/2019	$252,291.00	100%	5860	8: 5860
19042.00	**Valley Park, MO Highway 44 & 141 Storm Lines**	Michael T Steiniger , Sub to Kuesel Excavating P 636.978.3478 ext. 222 mike@kueselinc.com	854 Lone Star Drive O'Fallon, MO 63366	Alan Stuhlsatz	Travis Jerrels	CIPP - MO	8/3/2019	$19,325.00	100%	124	15: 47, 18: 77
19043.00	**Paducah, KY 2019 WW Collection System**	John Hodges, Paducah-McCraken Joint Sewer Agency P 270.575.0056 jhodges@jointsewer.com	621 Northview Street Paducah, KY 42001	Josh Grote/Tyler Partridge/John Glick	Deborah Bartley	CIPP - KY	2/11/2020	$1,012,940.00	100%	11751	8, 10, 12, 15, 18, 21, 24, 27
19044.00	**Raytown, MO 2019 Infiltration & Inflow**	Jason Hanson, City of Raytown P 816.737.6012 jasonh@raytwon.mo.us	10000 East 59th St. Raytown, MO 64133	Danny Brown	Brent Adams	CIPP - MO	9/20/2019	$205,815.50	100%	3386	8: 3386
19045.00	**San Antonio, TX 2018 EARZ, CO-00267-01, 18-4538**	Vanessa Castro, San Antonio Water System P 210-233-3992 vanessa.castro@saws.org	2800 U.S. Hwy 281 North San Antonio, Texas 78212	James Bower	Brian Ackerman	CIPP - TX	10/15/2020	$2,369,430.94	100%	6617	24: 6617
19047.02	**Ruidoso, NM Restoration of Existing Sewer Lines CO1**	Adam Sanchez , Village of Ruidoso P 575.937.0544 AdamSanchez@ruidoso-nm.gov	313 Cree Meadows Dr. Ruidoso, NM 88345	Jason Laney	Cory Street	CIPP - NM	10/20/2023	$7,310,182.83	100%	48730	8, 10, 12, 15, 18, 21, 24
19047.04	**Ruidoso, NM - July 2021 Flood Event, FLOODEVENT2021**				Cory Street	CIPP - NM	8/15/2022	$237,023.09	100%	41628	6: 117, 8: 21281, 10: 2458, 12: 4805, 15: 4184, 18: 7729, 21: 1054

SAK Construction Completed Project List

VP Job #	Project Name	Owner's Contact Information	Address	Superintendent	Project Manager	Type	Completed Date	Completed Amount	Percent Complete	Footage Complete	Diameters
19048.00	**Santa Rosa, CA Trunk Lining**	Tracy Duenas, City of Santa Rosa P 707.543.3952 tduenas@srcity.org	69 Stony Circle Santa Rosa, CA 95401	Brandon Smith	Todd Chalk	CIPP - CA	12/3/2019	$2,694,866.21	100%	1683	30, 36, 48
19049.00	**Eglin Air Force Base, FL ASUA East Coast 19939**	Jason Drayer, Sub to Emerald Coast Utility Services, Inc. P 850-324-2595 Jason.Drayer@asusinc.com	608 Range Road Eglin AFB, Fl 32542	Brett Ray / Tyler Partridge	Deborah Bartley	CIPP - FL	6/30/2019	$22,542.50	100%	635	8: 635
19050.00	**Kingsport, TN Industrial Sewer**	Matt McKinnon, Sub to Garney Companies P 407.287.8806 Matt McKinnon mmckinnon@garney.com	370 East Crown Point Road Winter Garden, FL 34787	John Glick	Deborah Bartley	CIPP - TN	12/13/2019	$179,300.00	100%	460	24: 460
19052.00	**Jefferson City, MO Sewer Main Rehab 2019**	Eric Seaman, City of Jefferson City P 573-634-6443 eseaman@jeffcitymo.org	320 E McCarty St. Jefferson City, MO 65101	Jeff Hirtz	Nick Pryor	CIPP - MO	10/31/2020	$1,897,368.25	100%	35744	6, 8, 10, 24, 30, 36, 42, 48, 60, 72
19053.00	**Whiteville, TN Sanitary Sewer Rehab**	Steven Bing PM, Sub to Argo Construction P 901.753.3673 ext 306 sbing@argoconstructioncorp.com	9394 Cordova Park Rd. Cordova, TN 38018	Tyler Partridge	Deborah Bartley	CIPP - TN	9/23/2019	$75,652.50	100%	1653	8: 1653
19055.00	**DeSoto, MO Sanitary Sewer Rehab**	Charles Roop, City of DeSoto P 636-586-3326 c.roop@desotomo.com	17 Boyd St, DeSoto MO 63020	Alan Stuhlsatz	Chris Vogt	CIPP - MO	12/18/2019	$188,962.45	100%	7110	8
19056.00	**Owensboro, KY 2019 Cured in Place Pipe**	Dirk Dooper, City of Owensboro P 270.687.8643 RDJ@owensboro.org	101 E 4th St. Owensboro, KY 42302	John Glick	Deborah Bartley	CIPP - KY	12/31/2019	$240,150.00	100%	1435	15, 18, 24, 54
19057.00	**Fairmont City, IL CDBG FY18, Cookson Rd at 45th**	Chad Ross, Village of Fairmont City P 314.241.6300 cross@twm-inc.com	600 Country Club View, Suite 1 Edwardsville, IL 62025	Alan Stuhlsatz	Travis Jerrels	CIPP - IL	9/19/2020	$59,503.00	100%	440	15: 340, 24: 100
19060.00	**St. Louis, MO USACE, W912P919D0009, Harlem Baden Package 8**	Eric Piel, US Army Corps of Engineers P 314.331.8320 eric.m.piel@usace.army.mil	1222 Spruce Street St. Louis, MO 63103	Gary Wilkins	Cory Street	Geokrete/CIPP - MO	3/31/2022	$9,960,348.57	100%	4720	5' box, 6' horseshoe, 6' round pipe, 7' horseshoe, 8' horseshoe, 12' horseshoe
19061.00	**Hilmar, CA Hilmar Cheese Co.**	Troy Roos, Hilmar Cheese Company P 209.777.2033 troos@hilmarcheese.com	9001 North Lander Ave. Hilmar, CA 95324	Jarmann Frazer	Todd Chalk	CIPP - CA	7/19/2019	$178,000.00	100%	293	12: 293
19062.00	**Fort Riley, KS IDIQ Contruction Contract**	Brian Petersen, Sub to Olgoonik Diversified Services P 785.784.8444 bpeterson@olgoonik.com	1861A H Street Fort Riley, KS 66442	Jeff Hirtz	Nick Pryor	CIPP - KS	8/6/2019	$46,550.00	100%	330	24: 330
19063.00	**Ellicott City, MD Court House Slope Stabilization**	Danny Childress, Sub to HTI Contractors P 410-781-0155 dchildress@hticontractors.com	4539 Sykesville Road Finksburg, MA 21048	Josh Grote	Travis Ewing	CIPP - MD	8/1/2019	$59,444.30	100%	103	36: 103
19067.00	**Santa Rosa, CA Rehab Matanzas Siphons**	Tracy Duenas, City of Santa Rosa P 707.543.3952 tduenas@srcity.org	69 Stony Circle Santa Rosa, CA 95401	Brandon Smith	Todd Chalk	CIPP - CA	12/6/2019	$2,371,717.78	100%	660	12: 220, 18: 220, 24: 220
19068.00	**Marion, IA 2019 Sanitary Sewer Sliplining**	Jacob Hahn, City of Marion P 319-743-6340 jhahn@cityofmarion.org	1225 6th Avenue, Suite 200 Marion, IA 52302	Alan Stuhlsatz	Chris Vogt	CIPP - IA	11/7/2019	$196,500.65	100%	7701	8: 7078, 10: 623
19069.00	**Fort Myers, FL Georgetown Community Sewer Repair**	Al Casing, City of Fort Myers 239.321.7594 acasing@cityftmyers.com	4200 Dr. Martin Luther King Jr. Blvd. Fort Myers, FL 33916	Angie Miller	Stan Krause	CIPP - FL	9/24/2019	$89,275.00	100%	2080	8: 2080
19070.00	**Baltimore, MD Honeywell, DMT-12th St.**	Kevin Wittmeyer, Sub to Jacobs P 973.896.0045 kevin.wittmeyer@jacobs.com	9191 South Jamaica St. Englewood, CO 80112	Josh Grote	Cory Street	CIPP - MD	12/22/2022	$150,400.00	100%	102	15: 26, 18: 76
19071.00	**St. Louis, MO Butler Hill**	Steve Welnick, Metropolitan STL Sewer District P 314.768.6378 swelnick@stlmsd.com	2350 Market St. St. Louis, MO 63103	Alan Stuhlsatz	Travis Jerrels	CIPP - MO	9/20/2019	$656,254.73	100%	516	30: 516
19072.00	**San Antonio, TX Multiple Sewershed 7A**	Vanessa Castro, San Antonio Water System P 210-233-3992 vanessa.castro@saws.org	2800 U.S. Hwy 281 North San Antonio, TX 78212	James Bower	Brian Ackerman	CIPP - TX	1/19/2021	$4,002,740.49	100%	5238	24, 30, 36, 42, 48
19073.00	**Lawrence, KS Sanitary Ph 2**	Luke Porter, Sub to Kissick Construction Co., Inc. P 816-363-5530 lporter@kissickco.com	8131 Indiana Ave. Kansas City, MO 64132	Jeff Hirtz	Nick Pryor	CIPP - KS	4/13/2020	$15,741.25	100%	245	8: 245
19074.00	**Las Vegas, NV 13994, 2016R4 Annual**	Jake Marshall, Sub to Las Vegas Paving Corp. 702. 251.5800 jake.marshall@lvpaving.com	4420 S. Decatur Blvd. Las Vegas, NV 89103	Fernando Avila	Leo Calvario	CIPP - NV	12/17/2020	$1,332,778.00	100%	26185	8: 22860, 10: 2558, 12: 767
19075.00	**St. Louis, MO Creve Coeur Creek**	Steve Welnick, Metropolitan STL Sewer District P 314.768.6378 swelnick@stlmsd.com	2350 Market St. St. Louis, MO 63103	Alan Stuhlsatz	Travis Jerrels	CIPP - MO	11/1/2022	$2,665,109.02	100%	68171	8, 12, 15, 18, 21, 24, 30, 36, 48
19076.00	**Cahokia, IL Sanitary Sewr Rehab FY 18**	Rory Morgan, Village of Cahokia P 618.301.2160 rmorgan@cahokiaillinois.org	201 W 4th St Cahokia, IL 62206	Alan Stuhlsatz	Travis Jerrels	CIPP - IL	11/12/2020	$69,573.45	100%	561	8: 277, 15: 284
19077.00	**Chattanooga, TN S Chick, Phase 1**	Ron Simmons, City of Chattanooga 423.643.6008 rsimmons@chattanooga.gov	101 East 11th Street Chattanooga, TN 37402	Glenn Spears	John Sybrandt	CIPP - TN	1/11/2021	$5,052,561.70	100%	4976	24, 54, 60
19078.00	**Lenexa, KS Lakeview Storm Drainage**	Marcus Linaweaver, Sub to Linaweaver Construction P 913-351-3474 marcus@linaweaver.com	719 E. Gilman Rd. Lansing KS 66043	Jeff Hirtz	Nick Pryor	CIPP - KS	1/18/2021	$324,629.50	100%	1943	15, 18, 24, 30, 36, 32x24, 48x36, 54x42
19079.00	**Hilton Head, SC Sewer Rehab, Phase 4**	Mike Fleury, South Island Public Service District 702.271.7630 mfleury@carollo.com	2 Genesta St. Hilton Head Island, SC 29928	Angie Miller	Stan Krause	CIPP - SC	12/11/2019	$692,864.00	100%	9157	6: 418, 8: 4696, 10: 1768, 12: 1090, 15: 663, 20: 522
19080.00	**St. Louis, MO Gasconade**	Steve Welnick, Metropolitan STL Sewer District P 314.768.6378 swelnick@stlmsd.com	2350 Market St. St. Louis, MO 63103	Jason Laney	Travis Jerrels	CIPP - MO	4/20/2021	$1,348,951.04	100%	677	30: 677
19081.00	**Memphis, TN Mud Island**	Joe Collins, Sub to Overland Contracting (Black & Veatch) P 913.458.9520 collinsjj@overlandcontracting.com	845 Crossover Lane Bldg. D Memphis, TN 38117	John Glick	Deborah Bartley	CIPP - TN	1/31/2020	$1,626,824.00	100%	1860	60
19083.00	**San Antonio, TX Silverhorn Golf**	Terri Ruckstuhl, San Antonio Water System P 210-233-3534 Terri.ruckstuhl@saws.org	2800 U.S. Hwy 281 North San Antonio, TX 78212	James Bower	Brian Ackerman	CIPP - TX	5/7/2020	$2,366,604.00	100%	5105	24: 4791, 30: 314

SAK Construction Completed Project List

VP Job #	Project Name	Owner's Contact Information	Address	Superintendent	Project Manager	Type	Completed Date	Completed Amount	Percent Complete	Footage Complete	Diameters
19085.00	**Kansas City, MO Turkey Creek**	Cody Cook, Sub to Kissick Construction Co., Inc. P 816.363.5530 ccook@kissickco.com	8131 Indiana Ave. Kansas City, MO 64132	Danny Brown	Brent Adams	CIPP - MO	3/30/2021	$1,582,657.90	100%	43569	8: 12193, 10: 10227, 12: 20185, 15: 334
19086.00	**Phoenix, AZ Northern Ave.**	Travis Monk, Sub to B & F Contracting P 602.326.9282 tmonk@bfcontracting.com	11011 N. 23rd Ave. Phoenix, AZ 85029	Gary Rodgers	David Burbank	CIPP - AZ	10/2/2019	$71,098.00	100%	714	8: 714
19087.00	**Mission Hill, KS Ensley Lane 63rd to Mission Dr.**	Dennis Langley, Sub to Langley Muehlberger Concrete Construction P 913.371.1070 dprjc5@gmail.com	54 N 10th Street Kansas City, KS 66102	Danny Brown	Brent Adams	CIPP - KS	9/19/2019	$23,500.00	100%	55	24: 55
19088.00	**Cahokia, IL 12" CIPP**	Rory Morgan, Village of Cahokia P 618.301.2160 rmorgan@cahokiaillinois.org	103 Main St. Cahokia, IL 62206	Alan Stuhlsatz	Travis Jerrels	CIPP - IL	9/23/2020	$84,140.25	100%	747	12
19089.00	**Rehoboth Beach, DE Delaware Ave Stormwater Improvements**	Kevin WIlliams, City of Rehoboth Beach 302-227-6181 ext. 621 kwilliams@cityofrehoboth.com	229 Rehoboth Ave. Rehoboth Beach, DE 19971	Josh Grote	Jeremy Scalio	CIPP - DE	9/19/2023	$499,051.98	100%	2687	15: 197, 18: 1414, 24: 272, 36: 804
19090.00	**Decatur, IL McKinley Avenue Sewer Rehabilitation City Project 2017-22 L17-5498**	Paul Caswell, City of Decatur P 217-424-2747 pcaswell@decaturil.gov	1 Gary K Anderson Plaza Decatur, IL 62523-1196	Jason Laney	Nick Pryor	CIPP - IL	11/12/2020	$5,286,444.96	100%	11976	34, 36, 42, 48, 54, 60, 63, 68, 72
19091	**Hays, KS - Sanitary Sewer CIPP Lining, 2019-01**				Brent Adams	CIPP - KS	12/31/2019	$391,411.50	100%	15121	8: 15121
19092.00	**Fort Leavenworth, KS Museum Area Sewer**	Pat Wheeler, Sub to Rodriguez Mechanical Contractors P 913-281-1814 pat@rmckc.com	541 S 11 St. Kansas City, KS 66105	Jeff Hirtz	Nick Pryor	CIPP - KS	11/1/2019	$65,481.00	100%	1606	6: 566, 8: 1040
19093.00	**Leavenworth, KS Thornton St.**	Luke Porter, Sub to Kissick Construction Co., Inc. P 816-363-5530 lporter@kissickco.com	8131 Indiana Ave. Kansas City, MO 64132	Jeff Hirtz	Nick Pryor	CIPP - KS	1/31/2021	$168,513.00	100%	4360	8: 2972, 10: 1388
19094.00	**Dover, PA Delwood, Maplewood, Willow SS Pipe Lining**	Jeffrey Spangler, Dover Borough P 717-846-4373 jspangler@jrholly.com	46 Butter Road Dover, PA 17315	Josh Grote	Travis Ewing	CIPP - PA	1/31/2020	$32,276.00	100%	1042	8: 1042
19095.00	**San Antonio, TX CIPP Evans Road**	Sylvester Ogidan, Sub to RJN Group P Contact Phone Number sylvester.ogidan@rjnmail.com	City Hall 100 Military Dr. San Antonio, TX 78205	James Bower	Brian Ackerman	CIPP - TX	10/9/2019	$159,518.00	100%	460	36: 460
19096.00	**Lenexa, KS 2019 Storm Sewer Lining Project**	Tom Jacobs, City of Lenexa P 913-477-7500 tjacobs@lenexa.com	17101 W. 87th St. Lenexa KS 66219	Jeff Hirtz	Nick Pryor	CIPP - KS	5/14/2020	$570,646.40	100%	6958	15: 6958
19097.00	**Pinellas Park, FL Renewal 7, Contract 13/014, 2019 Annual Project Name**	Dave Floyd, City of Pinellas Park 727.647.0181 dfloyd@pinellas-park.com	6250 82nd Ave Pinellas Park FL 33781	Angie Miller	Stan Krause	CIPP - FL	12/19/2020	$549,774.93	100%	16617	8: 11891, 10: 1985, 12: 2741
19099.00	**Aptos, CA Granite, Seascape Beach**	Doug Emenark, Sub to Granite Construction P 831.763.5526 doug.enemark@gcinc.com	580 West Beach St. Watsonville, CA 95077	Jarmann Frazer	Todd Chalk	CIPP - CA	10/21/2019	$80,000.00	100%	150	18: 150
19100.00	**Reno, NV 1400101, 2019 Sewer Rehab-Phase 1**	Jon Simpson, City of Reno P 775.689.2961 simpsonj@reno.gov	1 East 1st St 8th Floor Reno, NV 89505	Jarmann Frazer	Todd Chalk	CIPP - NV	6/19/2020	$8,341,811.74	100%	24907	8, 10, 12, 15, 18, 33, 36, 39, 48, 54, 60
19101.00	**Mission Woods, KS KS - 2019 CIPP**	John Sullivan, City of Westwood HilLump Sum, KS P 913.207.1214 john.sullivan@westwoodks.org	2545 W 47th St. Westwood, KS 66205	Danny Brown	Brent Adams	CIPP - KS	12/3/2019	$76,373.00	100%	384	12: 35, 18: 192, 36: 157
19102.00	**Eugene, MO 8528 N Shore Dr.**	Darrell Kolb, Sub to Stockman Construction Corp. P 573-635-1316 dak@stockmanncc.com	2021 Idlewood Road Jefferson City, MO 65109	Jeff Hirtz	Nick Pryor	CIPP - MO	10/24/2019	$9,605.00	100%	170	8: 170
19107.00	**Red Wing, MN 2019 Sewer Recon, Levee Rd, CIPP**	Bob Stark, City of Red Wing P 651-385-5112 bob.stark@ci.red-wing.mn.us	229 Tyler Road North Red Wing, MN 55066	Jason Laney	Nick Pryor	CIPP - MN	3/9/2020	$455,284.00	100%	2740	30: 2740
19108.00	**St. Louis, MO Gravios Truck, 21773, 10496-015.1**	Steve Welnick, Metropolitan STL Sewer District P 314.768.6378 swelnick@stlmsd.com	2350 Market St. St. Louis, MO 63103	Jason Laney	Travis Jerrels	CIPP - MO	5/25/2021	$16,727,660.53	100%	40986	36, 42, 48, 54, 60, 66, 72
19110.00	**St. Louis, MO Shiva Ct**	Jennifer Williams, Sub to Ideal Landscape Construction, Inc. P 314.892.9500 ext. 122 williams.jennifer@idealandscape.com	6252 OLump Sumen Road St. Louis, MO 63129	Alan Stuhlsatz	Travis Jerrels	CIPP - MO	5/1/2020	$31,610.00	100%	218	18: 218
19111.00	**Newport News, VA Boat Harbor Outlet Sewer**	Phil Hughes, Hampton Roads Sanitation District P 757-833-7426 phughes@hrsd.com	3289 G Avenue Newport News, VA 23602	Jacob Lambert	Ken Sprau	CIPP - VA	7/22/2021	$5,248,943.00	100%	3798	21, 33, 54
19113.00	**Franklin, IN Sanitary Sewer Lining**	Brad Gentry, Sub to IWM Consulting P 317-968-9256 bgentry@iwmconsult.com	7428 Rockville Rd Indianapolis, IN 46214	Bill Siebert	Chris Vogt	CIPP - IN	12/19/2019	$112,307.00	100%	1279	8: 290, 12: 989
19116.00	**San Antonio, TX Multiple Sewer 7B, CO-00308-0; 17-4534**	Estephanie Flores, San Antonio Water System P 210.233.3254 Estephanie.flores@saws.org	2800 U.S. Hwy 281 North San Antonio, TX 78212	James Bower	Brian Ackerman	CIPP - TX	9/11/2020	$1,249,839.00	100%	4116	24: 4116
19117.00	**Las Vegas, NV Sewer Rehab Group M**	Jake Marshall, Sub to Las Vegas Paving Corp. 702. 251.5800 jake.marshall@lvpaving.com	4420 S. Decatur Blvd. Las Vegas, NV 89103	Fernando Avila	Leo Calvario	CIPP - NV	12/17/2020	$1,651,947.00	100%	16048	8: 1030, 18: 6699, 21: 3789, 24: 2241, 27: 2289
19118.00	**The Woodlands, TX Bear Branch**	Ken Norsworthy, The San Jacinto River Authority P 281.362.3526 knorsworthy@sjra.net	1577 Dam Site Road Conroe, TX 77304	James Bower	Tommy Schultz	CIPP - TX	1/25/2021	$8,946,580.33	100%	16100	42 48, 54, 72
19119.00	**Affton, MO Affton Plaza**	Kent Piskulich, Sub to RPA Construction P 314.427.6633 ext. 1001 kp@rpaconst.com	10677 Trenton Ave St. Louis, MO 63132	Alan Stuhlsatz	Travis Jerrels	CIPP - MO	1/2/2020	$79,885.00	100%	138	24 x 36
19121.00	**Wentzville, MO Barclay Forest Ct Storm Sewer**	Jeff Kelly, Jeff Kelly Homes P 636.375.2726 jeffkellyhomes@centurytel.net	17998 Chesterfield Airport Rd Chesterfield, MO 63005	Alan Stuhlsatz	Travis Jerrels	CIPP - MO	12/12/2019	$31,950.00	100%	252	21: 252
	St. Louis, MO - MSD, Upper Maline Trunk, 21848, 12247-015.1	Metropolitan St. Louis Sewer District		Alan Stuhlsatz	Travis Jerrels	CIPP - MO	4/28/2021	$1,668,332.81	100%	13989	8: 4678, 10: 299, 12: 1640, 15: 310, 18: 195, 27: 823, 30: 1911, 33: 4133
19123.01	**Cicero, IN 24" Storm Sewer**	Terry Cooper, Town of Cicero P 3174--984-4833 tcooper@townofcicero.in.gov	1159 Stringtown Rd Cicero, IN 46034	Alan Stuhlsatz	Chris Vogt	CIPP - IN	6/30/2020	$47,775.00	100%	325	24: 325

SAK Construction Completed Project List

VP Job #	Project Name	Owner's Contact Information	Address	Superintendent	Project Manager	Type	Completed Date	Completed Amount	Percent Complete	Footage Complete	Diameters
19124.00	**Creve Coeur, MO Bayer, Bldg Q**	Anna Christensen, Sub to Interface Construction Corp P 314.522.1011 annac@interfacestl.com	8401 Wabash Ave. St. Louis, MO 63134-1837	Alan Stuhlsatz	Travis Jerrels	CIPP - MO	12/7/2019	$22,500.00	100%	150	8: 150
19125.00	**Diamond Springs, CA Lake Oaks Senior Mobile Home Community**	Shannon Mainwaring, Lake Oaks Senior Mobile Home Community P 530.676.5541 shannonm@pacbell.net	4280 Patterson Dr. Diamond Springs, CA 95619	Jarmann Frazer	Todd Chalk	CIPP - CA	12/12/2019	$53,500.00	100%	422	12: 120, 15: 302
19126.02	**Sedalia, MO Maplewood, Phase 3**	Cecelia Garceau, Sub to Missouri American Water P 417-334-4189 Cecelia.garceau@amwater.com	1 Water St. Camden, NJ 08102	Jeff Hirtz	Nick Pryor	CIPP - MO	5/5/2021	$114,280.00	100%	1553	8: 1553
19127.00	**Loomis, CA Rachal Ln Storm Drain**	Peter Molinelli, Sub to Martin Brothers Construction P 209.256.1995 pmolinelli@martinbrothers.net	8801 Folsom Blvd., Suite 260 Sacramento, CA 95826	Jarmann Frazer	Todd Chalk	CIPP - CA	1/31/2020	$56,000.00	100%	202	30: 120, 36: 82
19128.00	**Sarasota County, FL Bell Meade SS Pipeline**	John Saputo, Sarasota County Government 941.650.0022 jsaputo@scgov.net	1001 Sarasota Center Blvd. Sarasota, FL 34240	Scott Hoffman	Stan Krause	CIPP - FL	1/24/2021	$927,948.74	100%	21759	8: 19662, 10: 2097
19129.00	**Brooklyn Park, MN Brooklyn Park & Cham**	Tom Soucek, Sub to S.M. Hentges & Sons, Inc. P 952-452-9556 tom.soucek@smhentges.com	650 Quaker Ave. Jordan, MN 55352	Jason Laney	Nick Pryor	CIPP - MN	12/15/2021	$1,727,588.41	100%	5158	60, 66
19130.00	**Caseyville Township, IL 2019 Sewer Main Rehab**	Randy LePere, Township of Caseyville P 618.632.2414 relepere@ctwastewater.org	1 Ecology Dr O'Fallon, IL 62269	Alan Stuhlsatz	Travis Jerrels	CIPP - IL	4/27/2020	$382,997.50	100%	9480	8: 9480
19131.00	**Scottsdale, AZ Montebello & Jackrabbit**	Hassan ELump Sumaad, P 602.236.4619 Hassan.elsaad@srpnet.com	3160 S Alma School Rd Mesa, AZ	Jarmann Frazer	David Burbank	CIPP - AZ	3/13/2020	$415,008.00	100%	1370	36: 1370
19132.00	**Pittsburgh, PA 1st Ward Sewer System**	Manda Metzger, The Pittsburgh Water & Sewer Authority P 412-255-8800 Contact Email	1200 Penn Ave., Pittsburgh, PA 15222	Chad Rusher / Josh Grote	Brandt Childs	CIPP - PA	2/16/2021	$3,313,014.03	100%	19474	8: 18358, 10: 1081, 15: 36
19133.00	**Indianola, IA Sewer Main & Lateral Rehab**	Rick Graves, City of Indianola P 515-962-5284 rgraves@indianolaiowa.gov	11870 Hoover St Indianola, IA 50125	Alan Stuhlsatz	Chris Vogt	CIPP - IA	5/4/2020	$66,640.00	100%	2380	8: 2380
19134.00	**Versailles, MO Wastewater Conveyance System Rehab**	Lonnie Madole, City of Versailles P 573-789-5242 lmadole@alliancewater.com	104 N Fisher St. Versailles, MO 65084	Jeff Hirtz	Nick Pryor	CIPP - MO	2/8/2021	$923,953.25	100%	20797	8: 18279, 10: 1481, 12: 632, 18: 405
19135.00	**San Antonio, TX Blue Wing Rd**	Luis Gonzalez, San Antonio Water System P 210-233-2909 luis.gonzalez@saws.org	2800 U.S. Hwy 281 North San Antonio, TX 78212	James Bower	Roger Terrazas	CIPP - TX	12/4/2021	$6,448,929.73	100%	7101	18, 30, 60, 84
20001.00	**St. Louis, MO McKinley School Renovations**	Justin HueLump Summann, Sub to Budrovich Excavating P 618.920.8773 jhueLump Summann@budrovich.com	10328 Lake Bluff Dr St. Louis, MO 63123	Alan Stuhlsatz	Travis Jerrels	CIPP - MO	8/17/2020	$17,668.00	100%	176	8: 176
20002.00	**Rocklin, CA Pacific St. Sinkhole Emergency**	Rick Lawrence, City of Rocklin P 916.625.5521 richard.lawrence@rocklin.ca.us	4081 Alvis Court Rocklin, CA 95677	Brandon Smith	Todd Chalk	CIPP - CA	1/24/2020	$35,000.00	100%	260	21: 260
20004.00	**Caltrans, CA Emergency Culvert Hwy 183**	Mike Lorang, Sub to Lorang Brothers Construction, Inc. P 530.346.8150 carol@lorangbrothers.com	1175 S. Auburn St Colfax, CA 95713	Jarmann Frazer	Todd Chalk	CIPP - CA	2/7/2020	$23,000.00	100%	100	18: 100
20005.00	**Wyandotte County, KS 2019 Sanitary Sewer**	Jason Adkins, Sub to Blue Nile Contractors, Inc. P 816.656.6070 jason@bluenilecontractors.com	601 Spratley St. Birmingham, MO 64161	Danny Brown	Brent Adams	CIPP - KS	7/23/2020	$725,400.00	100%	1850	36: 1850
20006.00	**Shawnee, KS 2020 Storm Water**	Dan Forbes, Sub to Wiedenmann, Inc. P 816.322.1125 dan@wiedenmanninc.com	950 N Scott Belton, MO 64012	Danny Brown	Brent Adams	CIPP - KS	12/15/2020	$318,155.00	100%	2871	15: 758, 18: 991, 21: 467, 24: 578, 30: 77
20008.00	**Kansas City, MO Lower Blue River**	Greg Fry, Sub to Kissick Construction Co., Inc. P 913.530.8290 gfry@kissickco.com	8131 Indiana Ave. Kansas City, MO 64132	Danny Brown	Brent Adams	CIPP - MO	3/15/2022	$1,031,199.50	100%	28045	8: 3877, 10: 13434, 12: 10734
20009.10	**WSSC, MD Broad Creek, TO #10**	Dan Hamilton, Washington Suburban Sanitary Commission P 301-206-7316 dan.hamilton@wsscwater.com	14051 Sweitzer Lane Laurel, MD 20707	Jacob Lambert	Travis Ewing	CIPP - MD	12/22/2020	$1,002,199.88	100%	4648	8: 4648
20010.00	**Warrensburg, MO 2020 Sanitary Sewer Main**	Jason McCarty, City of Warrensburg P 660-262-4662 jason.mccarty@warrensburgmo.com	102A S. Holden St. Warrensburg, MO 64093	Jeff Hirtz	Nick Pryor	CIPP - MO	6/22/2020	$104,148.00	100%	4464	8: 3662, 10: 802
20011.00	**San Antonio, TX BPC East/West, CO-00318-01; 18-4534**	Carmen Groth, San Antonio Water Authority P 210-233-3619 carmen.groth@saws.org	2800 U.S. Hwy 281 North San Antonio, TX 78212	James Bower	Brian Ackerman	CIPP - TX	12/12/2020	$1,855,896.00	100%	4576	8: 3256, 10: 648, 18: 672
20012.00	**Gilroy, CA Ambrosia Trench**	Chris Dietrich, Sub to Garney Companies P 925.800.1848 cdietrich@garney.com	3049 Independence Drive, Suite E Livermore, CA 94551	Brandon Smith	Todd Chalk	CIPP - CA	11/30/2020	$439,483.00	100%	2965	15: 670, 18: 2295
20013.00	**Topeka, KS Eastside Interceptor Rehab Seg 1**	Daniel Shively, Sub to BRB Contractors P 785-290-1156 danieLump Sumhively@brbcontractors.com	3805 NW 25th St. Topeka, KS 66618	Jeff Hirtz	Nick Pryor	CIPP - KS	12/31/2020	$996,590.81	100%	4268	42
20014.00	**Phoenix, AZ Helios Education Foundation**	Kris Comon, Sub to UEB Builders, Inc. P 602.920.0122 kris.comon@katerra.com	3080 N Civic Center Plz #100 Scottsdale, AZ 85251	Gary Rodgers	David Burbank	CIPP - AZ	3/31/2020	$29,629.00	100%	801	8: 801
20015.00	**West Columbia, SC Saluda River SS**	Jeremy Bristow, City of West Columbia 803.518.5312 jbristow@westcolumbiasc.gov	200 N 12th Street West Columbia, SC 19169	Glenn Spears/ John Glick	John Sybrandt	CIPP - SC	11/30/2020	$1,372,543.05	100%	5894	18: 899, 24: 2862, 30: 2133
20016.00	**San Frandisco, CA Geary Rapid W**	Kenneth Cormican, Sub to JDB & Sons Construction, Inc. P 415.608.3135 kenneth@jdb-construction.com	1595 Fairfax Ave San Francisco, CA	Brandon Smith	Todd Chalk	CIPP - CA	9/16/2020	$290,725.00	100%	1140	12: 243, 16: 300, 26: 597
20017.00	**Phoenix, AZ WS90500272**	Patrick Donahue, Sub to B & F Contracting, Inc. P 623.582.1170 pdonahue@bfcontracting.com	11011 N. 23rd Ave. Phoenix, AZ 85029	Gary Rodgers	David Burbank	CIPP - AZ	9/3/2020	$136,723.00	100%	677	39: 677
20018.00	**Sacramento, CA Mission Trunk Rehab**	Agustin Lopez, Sacramento Area Sewer District P 916.875.6595 lopeza@sacsewer.com	10060 Goeth Rd. Sacramento, CA 95827	JarmannFrazer/Brand on Smith	Leo Calvario	CIPP - CA	2/20/2021	$22,076,525.49	100%	14054	36, 42, 54, 60, 63, 75
20019.00	**New Haven, MO CIPP 2020**	Peter Otten, City of New Haven P 573-291-0252 peter.otten@newhavenmo.org	101 Front St New Haven, MO 63068	Alan Stuhlsatz	Chris Vogt	CIPP - MO	5/4/2020	$46,381.25	100%	1710	8: 1710

SAK Construction Completed Project List

VP Job #	Project Name	Owner's Contact Information	Address	Superintendent	Project Manager	Type	Completed Date	Completed Amount	Percent Complete	Footage Complete	Diameters
20020.00	**Caltrans, CA 2131 Rte 50 Pollock Pine**	Dan Erskine, Sub to Flatiron West, Inc. P 707.742.6000 derskine@flatironcorp.com	2100 Goodyear Road Benicia, CA 94510	Jarmann Frazer	Todd Chalk	CIPP - CA	5/29/2020	$27,116.00	100%	36	18: 36
20021.00	**Golden, CO 2018 Pipe Lining**	Patrick LeClair, Sub to Vortex Industrial P 616-502-2507 pleclair@vortexcompanies.com	9155 Wallisville Rd. Houston, TX 77029	Brad Schenning	Chris Vogt	CIPP - CO	8/2/2021	$403,573.00	100%	1014	27: 234, 36: 780
20023.00	**Hutchinson, KS CIPP & MH Rehab**	Jessica Lowe, City of Hutchinson P 620.694.2645 Jessica.Lowe@hutchgov.com	1500 South Plum Hutchinson, KS 67501	Danny Brown	Brent Adams	CIPP - KS	5/29/2020	$906,296.00	100%	4588	27: 4588
20024.00	**San Antonio, TX Central Sewershed 7**	Luis Gonzalez, San Antonio Water System P 210-233-2909 luis.gonzalez@saws.org	2800 U.S. Hwy 281 North San Antonio, TX 78212	James Bower	Brian Ackerman	CIPP - TX	7/5/2020	$2,970,340.91	100%	3573	8, 24, 54
20025.00	**Carmel, IN 2019 Sewer Lining, Contract 97**	John Duffy, City of Carmel 831.620.2070	One Civic Drive Carmel, IN 46032	Bill Siebert	Chris Vogt	CIPP - IN	11/30/2020	$734,974.00	100%	24133	8: 19248, 10: 3686, 12: 1199
20027.00	**Porter County, IN Old South Haven Stormwater**	Michael Novotney, Porter County Dept of Development & Storm Water Mgmt P 219-465-3507 mnovotney@porterco.org	155 Indiana Ave Valparaiso, IN 46383	Brad Schenning	Chris Vogt	CIPP - IN	6/7/2021	$4,002,354.37	100%	14500	12', 18, 24, 30, 36, 42, 48, 54, 60
20028.00	**Ainsworth, NE Wastewater Facility Improvements**	Brad Miller, City of Ainsworth P 402-387-2494 ainswater@threeriver.net	606 E. 4th St. Ainsworth, NE 69210	Jeff Hirtz	Nick Pryor	CIPP - NE	8/28/2020	$564,119.38	100%	18445	8: 17730, 10: 313, 12: 402
20030.00	**Wayzala, MN 2020 Sanitary Sewer Rehab**	Jennifer Schumann, City of Wayzala P 952-404-5371 jschumann@wayzata.org	299 Wayzata Blvd, W. Wayzata, MN 55391	Alan Stuhlsatz	Karl Bates	CIPP - MN	12/15/2020	$210,894.38	100%	9336	8: 9336
20031.00	**Kansas City, MO Multivac, 12" CMP**	Dan Bowden, Sub to Bowden Contracting Company, Inc. P 816.223.496 dan@bowdencontracting.com	5748 Kessler Lane Merriam, KS 66203	Danny Brown	Brent Adams	CIPP - MO	6/15/2020	$19,600.00	100%	140	12: 140
20032.00	**Holton, KS 2020 Collection System Rehab; CIPP**	Denny Ashcraft, City of Holton P 785.364.7973 dashcraft@holtonkansas.org	430 Pennsylvania Avenue Holton, KS 66436	Danny Brown	Brent Adams	CIPP - KS	6/18/2020	$240,349.00	100%	9536	8: 7666, 10: 1652, 12: 218
20034.00	**Warrenton, MO CIPP Pope Rehab**	Jon Struckhoff, City of Warrenton P 636.456.3535 jstruckhoff@warrenton-mo.org	200 West Booneslick Road Warrenton, MO 63383	Alan Stuhlsatz	Travis Jerrels	CIPP - MO	9/4/2020	$49,442.50	100%	1434	8, 84
20036.00	**Marion, IA 2020 Sanitary CIPP Rehab**	Jacob Hahn, City of Marion P 319-743-6340 jhahn@cityofmarion.org	1225 6th Avenue, Suite 200 Marion, IA 52302	Alan Stuhlsatz	Chris Vogt	CIPP - IA	7/13/2020	$113,676.00	100%	3694	8: 1256, 10: 2438
20037.00	**Las Vegas, NV 14255, 19.46330-JH**	Jake Marshall, Sub to Las Vegas Paving Corp. 702. 251.5800 jake.marshall@lvpaving.com	4420 S. Decatur Blvd. Las Vegas, NV 89103	Gary Rodgers	Leo Calvario	CIPP - NV	10/15/2020	$221,542.00	100%	2297	8: 2297
20038.00	**Phoenix, AZ Small Diameter SS Rehab - 2019**	Don Gerkin, City of Phoenix P 602.262.7481 donald.gerkin@phoenix.gov	200 W Washington St Phoenix, AZ 85003	Gary Rodgers	David Burbank	CIPP - AZ	9/30/2021	$4,384,048.36	100%	126650	8: 117137, 10: 2732, 12: 4679, 15: 2102
20039.00	**Fenton, MO CIPP Project**	Bob Hembrock, Northeast Public Sewer District P 636-343-5090 bobh@northeastsewer.org	1041 Gravois Road Fenton MO 63026	Jason Laney	Nick Pryor	CIPP - MO	7/2/2021	$368,266.90	100%	7381	6: 569, 8: 6812
20040.00	**Delaware County, IN Collection System Improvements**	Rob Bellucci, Delaware County Regional WW District P 813-956-2768 rbellucci@contactcei.com	100 W. Main St, #211 Muncie,IN 47305	Alan Stuhlsatz	Chris Vogt	CIPP - IN	10/2/2020	$525,041.50	100%	17680	8: 14589, 10: 1365, 12: 1726
20041.00	**Kansas City, MO Cerner Bldg 2800**	Noah Gibson, Sub to Kissick Construction Co., Inc. P 816.507.3368 noahg@kissickco.com	8131 Indiana Ave. Kansas City, MO 64132	Danny Brown	Brent Adams	CIPP - MO	11/12/2020	$70,522.00	100%	398	24: 228, 30: 170
20042.00	**Kansas City, KS Leavenworth & Way**	Trevor Kratzberg, Sub to Lexeco P 816.223.8959 trevor@lexeco.com	5037 S 4th Street Leavenworth, KS 66048	Danny Brown	Brent Adams	CIPP - KS	9/15/2020	$39,680.00	100%	40	36: 40
20043.00	**Los Angeles, CA Jt Outfall H**	Anthony Christensen, Sub to Miaden Buntich Construction Co., Inc. 909.920.9977 anthony@buntich.com	1500 W. 9th Street Upland, CA 91786	Fernando Avila	Leo Calvario	CIPP - CA	5/31/2022	$1,117,332.60	100%	1464	15, 21, 24, 36, 66
20044.00	**Prescott, AZ COP CIP#19-014, Airport Tnk**	Justin Boren, Sub to Fann Contracting, Inc. P 928.778.0170 justin@franncontracting.com	PO Box 4356 Prescott, AZ 86302	Gary Rodgers	David Burbank	CIPP - AZ	6/23/2020	$35,152.00	100%	488	8: 238, 12: 250
20045.00	**Williamsport, IN WW System Improvement**	Connor Swain, Sub to Midwest Mole P 317-607-4022 cswain@midwestmole.com	6814 W 350N Greenfield, IN 46140	Alan Stuhlsatz	Chris Vogt	CIPP - IN	10/16/2020	$138,210.70	100%	4210	6: 800, 8: 1789, 10: 1621
20046.00	**Tarrant, AL Five Mile Creek**	Rusty Palmer, Sub to Jordan Excavating Company, LLC P 205.987.0534 rusty@jordan-excavating.com	740 Volare Dr, Birmingham, AL 35244	Tyler Partridge	Deborah Bartley	CIPP - AL	11/20/2020	$790,140.00	100%	1770	30, 36, 48
20048.07	**WSSC, MD Lower Anacosia TO #7**	Calvin Johnson, Washington Suburban Sanitary Commission P 202.594.6800 Calvin.Johnson@wsscwater.com	14051 Sweitzer Lane Laurel, MD 20707	Marco Antonelli	Brandt Childs	CIPP - MD	4/30/2021	$806,506.04	100%	1038	8: 1038
20049.00	**San Antonio, TX Central 2, 10294-CO-00328-01**	Luis Gonzalez, San Antonio Water System P 210.233.2909 luis.gonzalez@saws.org	2800 U.S. Hwy 281 North San Antonio, TX 78212	James Bower	Brian Ackerman	CIPP - TX	10/27/2020	$596,617.80	100%	670	18: 80, 24: 180, 36: 410
20050.00	**Santa Rosa, CA Llano Trunk-West Third St.**	David Fradelizio, City of Santa Rosa P 707.543.3862 dfradelizio@srcity.org	69 Stony Circle Santa Rosa, CA 95401	Jarmann Frazer	Todd Chalk	CIPP - CA	2/28/2021	$5,556,006.75	100%	4287	18, 27, 36, 54
20051.00	**Little Rock, AR Airport South 60" Sewer**	Myron Welch, Little Rock Reclamation Authority P 501.688.1439	11 Clearwater Dr. Little Rock, AR 72204	Glenn Spears	Deborah Bartley	CIPP - AR	12/22/2020	$1,968,411.00	100%	4501	60
20052.00	**Pinellas Park, FL 30" Rehab Sanitary Sewer**	Dave Floyd, City of Pinellas Park 727.369.5623 davefloyd@pinellas-park.com	PO Box 3138 Pinellas Park, FL 33780-3138	Tommie Botti	Stan Krause	CIPP - FL	10/20/2020	$681,600.00	100%	2409	30: 2409
20053.00	**Jackson, MO 2020 Sewer Lining Program**	Clint Brown, City of Jackson P 573-243-2300 cbrown@jacksonmo.org	101 Court St. Jackson, MO 63755	Alan Stuhlsatz	Travis Jerrels	CIPP - MO	8/18/2020	$100,125.50	100%	3625	8: 3625
20054.00	**Omaha, NE 18th & Fort**	Jesse Walz, Sub to L.G. Roloff Construction Co., Inc. P 531-600-6766 jessew@roloffinc.com	1819 Farnam Street Suite 601 Omaha, NE 68183	Jeff Hirtz	Nick Pryor	CIPP - NE	8/12/2021	$230,252.00	100%	1706	8: 334, 36: 1372

SAK Construction Completed Project List

VP Job #	Project Name	Owner's Contact Information	Address	Superintendent	Project Manager	Type	Completed Date	Completed Amount	Percent Complete	Footage Complete	Diameters
20056.00	**Lakeville, MN I&I Improvement, No. 20-22**	Steven Grossman, City of Lakeville (952)985-2742 sgrossman@lakevillemn.gov	18400 Ipava Avenue Lakeville, MN 55044	Danny Brown	Karl Bates	CIPP - MN	12/15/2020	$315,694.00	100%	13824	8: 12664, 9: 1160
20058.00	**Topeka, KS 12" CIPP**	Darran Classen, PE, Sub to Arrowhead Contracting, Inc. P 913.481.0723 dclassen@arrowhead-usa.com	10981 Eicher Drive Lenexa, KS 66219	Danny Brown	Nick Pryor	CIPP - KS	7/3/2020	$15,700.00	100%	173	12: 173
20059.02	**Baltimore, MD Honeywell, DMT**	Kevin Wittmeyer, Sub to Jacobs P 973.896.0045 kevin.wittmeyer@jacobs.com	Dundalk Marine Terminal 1000 Wills Street Baltimore, MD 21231	Neil Soriano	Ken Sprau	CIPP - MD	7/29/2021	$39,789.00	100%	340	5: 340
20059.03	**Baltimore, MD Hill, Tronox Hawkins Point**	Kevin Wittmeyer, Sub to Jacobs P 973.896.0045 kevin.wittmeyer@jacobs.com	Dundalk Marine Terminal 1000 Wills Street Baltimore, MD 21231	Neil Soriano / Matt Mallam	Ken Sprau	CIPP - MD	11/10/2022	$999,900.00	100%	3190	27, 30, 42
20060.00	**Chattanooga, TN S Chick, Phase 2, W-17-021-201**	Ron Simmons, City of Chattanooga P 423.643.6033 rlsimmons@chattanooga.gov	1250 Market Street Ste. 2100 Chattanooga, TN 37402	Glenn Spears / John Glick	Brian Ackerman	CIPP - TN	8/9/2021	$2,388,939.00	100%	5554	12: 3011, 15: 1495, 18: 1048
20061.00	**Marshall, MO 2020 MMU Sewer Main Rehab**	Grant Piper, Marshall Municipal Utilities P 660-886-6966 Contact Email	75 E. Morgan Marshall, MO 65340	Jeff Hlrtz	Nick Pryor	CIPP - MO	6/30/2021	$332,774.00	100%	11336	8: 8596, 15: 2740
20062.14	**WSSC, MD Western Branch Task Order #14**	Calvin Johnson, Washington Suburban Sanitary Commission P 202.594.6800 Calvin.Johnson@wsscwater.com	14051 Sweitzer Lane Laurel, MD 20707	Marco Antonelli	Brandt Childs	CIPP - MD	10/31/2021	$1,469,442.53	100%	5065	8: 5065
20063.00	**San Antonio,TX CMOM Pkg 4 (EARZ) CO-00342-01**	Luis Gonzalez, San Antonio Water System P 210.233.2909 luis.gonzalez@saws.org	2800 U.S. Hwy 281 North San Antonio, TX 78212	James Bower	Brian Ackerman	CIPP - TX	10/25/2020	$1,537,057.47	100%	6610	21: 1387, 24: 1921, 27: 762, 30: 813, 33: 1727
20064.00	**St. Charles, MO Bristol Ridge**	Steve Benskin, Sub to KCI Construction Company P 314-894-8888 sbenskin@kciconstruction.com	10315 Lake Bluff Drive St. Louis, MO 63123	Jason Laney	Travis Jerrels	CIPP - MO	8/10/2020	$31,350.00	100%	330	30: 330
20065.00	**Kansas City, MO Storm Sewer Rehab**	Ron Roy, General Mills P 913.707.8858 Ron.Roy@genmills.com	2917 Guinotte Ave Kansas City, MO 64120	Danny Brown	Brent Adams	CIPP - MO	10/13/2020	$49,920.00	100%	157	18: 121, 24: 36
20066.00	**Lowell, IN 2020 Street Improvements**	Keith Kegebein, Sub to Dyer Construction Company P 219-713-3156 kkegebein@dyerconstruction.com	1716 Sheffield Ave Dyer, IN 46311	Brad Schenning	Chris Vogt	CIPP - IN	11/16/2020	$124,534.00	100%	3044	12: 3044
20067.00	**Mireral County, NV NDOT 3826**	Brett Amesbury, Sub to Q & D Construction, Inc. P 775.353.7114 bamesbury@qdconstruction.com	1050 S. 21st St. Sparks, NV 89431	Jarmann Frazer	Todd Chalk	CIPP - NV	8/24/2020	$544,064.00	100%	1784	36: 1784
20068.00	**Ozark, MO 2020 Sanitary Sewer Rehab**	Mark Blair, PE, Cochran Engineering P 417.595.4108 mblair@cochraneng.com	2804 North Biagio Street Ozark, MO 65721	Jeff Hirtz	Nick Pryor	CIPP - MO	11/20/2020	$258,858.00	100%	6514	8: 6514
20069.00	**St. Louis, MO MSD, Valley Public I/I, 21912, 12507-015.1**	Steve Welnick, Metropolitan STL Sewer District P 314.768.6378 swelnick@stlmsd.com	2350 Market St. St. Louis, MO 63103	Alan Stuhlsatz	Travis Jerrels	CIPP - MO	12/12/2023	$1,082,816.70	100%	27041	8: 25925, 10: 1116
20070.00	**Las Vegas, NV Ogden Ave**	Jake Marshall, Sub to Las Vegas Paving Corp. 702. 251.5800 jake.marshall@lvpaving.com	4420 S. Decatur Blvd. Las Vegas, NV 89103	Gary Rodgers	Leo Calvario	CIPP - NV	1/18/2021	$57,600.00	100%	470	10: 470
20071.00	Royal Oak, MI 2020 Sewer Lining, S2002	Merleo Seneres, City of Royal Oak P 248.246.3260 merleos@romi.gov	203 S. Troy Street Royal Oak, MI 48067	Alan Stuhlsatz	Nick Pryor	CIPP - MI	8/30/2022	$753,752.78	100%	6160	8: 4730, 10: 660, 12: 450, 22: 320
20072.00	**Baldwin City, KS East Side Interceptor**	Jeff Murphy, Sub to Nowak Construction Company P 316.299.8934 jeff@nowakconstruction.com	200 S Goddard Rd Goddard, KS 67052	Danny Brown	Brent Adams	CIPP - KS	12/30/2021	$19,754.00	100%	386	8: 386
20073.00	**Knoxville, TN Temple Acres Sewr Rehab**	Cain Reed, WK Dickson P 865.684.3583 creed@wkdickson.com	2035 Lakeside Centre Way #180 Knoxville, TN 37922	Tyler Partridge	Brian Ackerman	CIPP - TN	5/2/2021	$1,293,555.68	100%	13670	8: 13670
20075.00	**Phoenix, AZ 43rd Ave, WS90500232-2**	Travis Monk, Sub to B & F Contracting P 602.326.9282 tmonk@bfcontracting.com	11011 N. 23rd Ave. Phoenix, AZ 85029	Gary Rodgers	David Burbank	CIPP - AZ	8/29/2020	$14,500.00	100%	75	8: 75
20076.08	**WSSC, MD Northeast Branch, TO #08**	April Wilt, Washington Suburban Sanitary Commission P 240.508.1655 April.Wilt@wsscwater.com	14051 Sweitzer Lane Laurel, MD 20707	Marco Antonelli	Zach Adcock	CIPP - MD	2/4/2022	$1,158,240.13	100%	3469	8: 2989, 12: 480
20077.09	**WSSC, MD Northeast Branch, TO #09**	April Wilt, Washington Suburban Sanitary Commission P 240.508.1655 April.Wilt@wsscwater.com	14051 Sweitzer Lane Laurel, MD 20707	Marco Antonelli	Zach Adcock	CIPP - MD	3/23/2023	$1,071,720.63	100%	3703	8: 3703
20078.00	**Murfreesboro, TN 2020 Rehab**	Jeramie White, Sub to SBW Constructors, LLC P 615.574.9420 jwhite@sbwconstructors.com	405 Church St. Goodlettsville, TN 37072	John Glick	Deborah Bartley	CIPP - TN	9/30/2021	$1,653,764.50	100%	4696	8, 15, 18, 21, 36, 48, 54
20079.00	**Omaha, NE MO Ave/Spring Lake Park**	Brian Sorenson, Sub to L.G. Roloff Construction Co., Inc. P 531-600-6766 brians@roloffinc.com	1819 Farnam Street Suite 601 Omaha, NE 68183	Jeff Hirtz	Nick Pryor	CIPP - NE	5/4/2021	$41,808.00	100%	393	10: 61, 18: 332
20080.00	**Dothan, AL Omussee Creek Trunk Line Rehab**	Kenny Sanders, Poly Engineering P 334.944.2470 ksanders@poly-inc.com	1935 Headland Ave Dothan, AL 36303	John Glick	Brian Ackerman	CIPP - AL	9/12/2022	$7,229,956.60	100%	22974	21: 2715, 24: 3733, 27: 10450, 30: 290, 36: 5786
20081.00	**St. Louis, MO Lemay Public, A, 21917, 12059-015.1**	Steve Welnick, Metropolitan STL Sewer District P 314.768.6378 swelnick@stlmsd.com	2350 Market St. St. Louis, MO 63103	Alan Stuhlsatz	Travis Jerrels	CIPP - MO	3/14/2024	$1,901,964.52	100%	32117	6, 8, 10, 23, 15, 18, 20, 21, 24, 36
20082.01	**St. Petersburg, FL 2013-111, SAN Release 1**	Matt Wilson, City of St. Petersburg 727.415.0192 Matthew.Wilson@stpete.org	One 4th Street North, 5th Floor St. Petersburg, FL 33701	Tommie Botti	Stan Krause	CIPP - FL	10/20/2023	$1,932,472.01	100%	55386	8: 51492, 10: 1535, 12: 2181, 15: 178
20082.02	**St. Petersburg, FL 2013-111, SAN Release 2**	Matt Wilson, City of St. Petersburg 727.415.0192 Matthew.Wilson@stpete.org	One 4th Street North, 5th Floor St. Petersburg, FL 33701	Tommie Botti	Stan Krause	CIPP - FL	9/21/2023	$1,774,265.12	100%	45129	8: 38184, 10: 3719, 12: 839, 15: 2387

SAK Construction Completed Project List

VP Job #	Project Name	Owner's Contact Information	Address	Superintendent	Project Manager	Type	Completed Date	Completed Amount	Percent Complete	Footage Complete	Diameters
20083.00	**Carroll County, MD 5926 Snowden Run Rd.**	Paul Callahoan, Sub to Pole Building Plus P 240.674.5758 paul@pbpunderground.com	11314 Daysville Road Frederick, MD 21701	Jacob Lambert	Bob Quackenbush	CIPP - MD	9/29/2020	$7,030.00	100%	190	8: 190
20084.00	**Caltrans, CA Knife River, 03-3H6504, Hwy 49**	Todd Garman, Sub to Knife River Construction P 530.896.7115 todd.garman@kniferiver.com	1764 Skyway Chico, CA 95928	Pete Voelker	Todd Chalk	CIPP - CA	6/15/2021	$40,800.00	100%	140	18: 140
20085.00	**St. Louis, MO Muny Site Utilities**	John Phinney, Sub to Tarlton Corporation P 314-633-3328 JTPhinney@tarltoncorp.com	5500 W Park Ave St. Louis, MO 63110	Alan Stuhlsatz	Travis Jerrels	CIPP - MO	12/15/2020	$23,370.34	100%	301	6: 288, 12: 13
20086.00	**Phoenix, AZ N 12 St. & Indian School Rd.**	Jeff Hyatt, Salt River Project P 602.600.7004 Jeff.Hyatt@srpnet.com	PO Box 52025 Phoenix, AZ 85072	Gary Rodgers	David Burbank	CIPP - AZ	3/20/2020	$70,785.00	100%	480	18: 480
20087.00	**Augusta, GA Lake Terrace CIPP**	Slyvester Rosier, City of Augusta 706.312.4154 Srosier@augustaga.gov	452 Walker St Suite 200 Augusta GA 30901	Tommie Botti	Stan Krause	CIPP - GA	12/22/2021	$205,772.00	100%	1283	18: 1283
20089.00	**Fort Wayne, IN 2021 CIPP #1-Small & Medium Diameter**	Khylei Myers, City of Fort Wayne P 260-427-2597 khylei.myers@cityoffortwayne.org	200 E Berry St Fort Wayne, IN 46802	Alan Stuhlsatz	Chris Vogt	CIPP - IN	10/20/2023	$2,895,275.00	100%	36748	8, 10, 12, 15, 18, 20, 21, 24, 30, 33, 36
20090.00	**St. Louis, MO 18" Storm Drain Line, Bausch & Lomb**	Bill Weaver, Bausch & Lomb P 636-226-3473 bill.weaver@bausch.com	3365 Tree Court Industrial Blvd St. Louis, MO 63122	Alan Stuhlsatz	Travis Jerrels	CIPP - MO	12/23/2020	$28,700.00	100%	325	18: 325
20091.00	**O'Fallon, MO 2020 Sanitary Sewer Lining**	Kevin Hampe, City of O'Fallon P 636-379-7600 khampe@ofallon.mo.us	401 S. Cool Springs Rd. O'Fallon, MO 63366	Alan Stuhlsatz	Travis Jerrels	CIPP - MO	5/21/2021	$340,999.24	100%	15735	8: 15735
20092.00	**Caltrans, CA Granite, 05-1N2304, 1027003, Culvert Repairs**	Jose Melgoza, Sub to Granite Construction P 408.315.9159 jose.melgoza@gcinc.com	580 W. Beach St Watsonville, CA 95076	Brandon Smith	Todd Chalk	CIPP - CA	10/30/2020	$84,667.00	100%	242	18: 242
20093.00	**Marshall, MO Municipal Svcs, 15" CIPP**	Bill Anderson, City of Marshall P 660-886-3945 billanderson@mmuonline.net	75 E. Morgan Marshall, MO 65340	Jeff Hirtz	Nick Pryor	CIPP - MO	2/24/2021	$7,500.00	100%	80	15: 80
20094.00	**Topeka, KS Van Buren & Jackson St.**	Tony Emerson, Sub to Emcon, Inc. P 785-862-7711 tony@emcon.us	620 SE Madison Topeka, KS 66607	Jeff Hirtz	Nick Pryor	CIPP - KS	4/30/2021	$922,783.06	100%	4849	24: 1671, 36: 3178
20095.00	**Las Vegas, NV Annual S.S. Rehab**	Jake Marshall, Sub to Las Vegas Paving Corp. 702. 251.5800 jake.marshall@lvpaving.com	4420 S. Decatur Blvd. Las Vegas, NV 89103	Fernando Avila	Leo Calvario	CIPP - NV	4/23/2021	$1,093,040.00	100%	21683	8: 21132, 10: 551
20096.00	**Riverside, MO 2020 Indian HilLump Sum CIPP**	Travis Hoover, City of Riverside P 816.769.1601 thoover@riversidemo.com	2950 NW Vivion Road Riveride, MO 64150	Danny Brown	Brent Adams	CIPP - MO	3/15/2021	$62,235.00	100%	545	15: 160, 18: 30, 21: 190, 30: 165
20097.00	**California, MO Vaughn Drive**	Darrell Kolb, Sub to Stockman Construction Corp. P 573.635.1316 dak@stockmancc.com	2021 Idlewood Road Jefferson City, MO 65109	Jeff Hirtz	Nick Pryor	CIPP - MO	12/22/2020	$21,789.00	100%	538	8: 538
20098.00	**Lenexa, KS Lenexa Ashley Park**	Scott Wolters, Sub to VF Anderson Builders, LLC P 816.935.9852 vfabuilders@yahoo.com	17101 W. 87th St. Lenexa KS 66219	Danny Brown	Nick Pryor	CIPP - KS	3/29/2021	$231,654.00	100%	2328	15: 792, 18: 263, 21: 209, 24: 364, 30: 32, 36: 669
20099.00	**O'Fallon, MO Duckett Creek, Cross Bore CIPP Repair**	Todd Rasche, Duckett Creek Sanitary District P 636.498.8154 rasche@duckettcreek.com	3550 State Hwy K O'Fallon, MO 63368	Alan Stuhlsatz	Travis Jerrels	CIPP - MO	12/28/2020	$10,879.00	100%	166	8: 166
20101.00	**Kansas City, KS Fairfax Trafficway Sewer Rehab**	Steve Dailey, Fairfax Drainage District P 913.321.2260 spdailey@sbcglobal.net	1620 Fairfax Trafficway Kansas City, KS 66115	Danny Brown	Brent Adams	CIPP - KS	4/1/2021	$324,175.20	100%	1593	36: 1593
20102.00	**Phoenix, AZ COP SS Emer 39th Ave.**	Dan Broderick, Sub to Achen-Gardner Engineering, LLC P 480.940.1300 dbroderick@achen.com	550 S. 79th St. Chandler, AZ 85226	Gary Rodgers	David Burbank	CIPP - AZ	10/23/2020	$37,150.00	100%	90	8: 90
20103.00	**Pinellas Park, FL Renewal 8, Contract 13/014, 2020 Annual**	Dave Floyd, City of Pinellas Park 727.647.0181 Dfloyd@pinellas-park.com	6250 82nd Ave Pinellas Park FL 33781	Tommie Botti	Stan Krause	CIPP - FL	1/12/2022	$549,810.19	100%	16923	8: 16351, 10: 444, 12: 128
20104.00	**Jefferson County, AL AMP15 /Brickyard**	Hugh Cornell, Sub to BLD Services P 502.220.0478 hugh@bldllc.net	2424 Tyler Street Kenner, LA 70062	Tyler Partridge	Amir Alzer	CIPP - AL	8/10/2021	$352,257.00	100%	15225	8: 14251, 10: 974
20105.00	**Kansas City, MO Streetcar Phase 2**	John Garvey, Sub to Kissick Construction Co., Inc. P 816.365.3321 jgarvey@kissickco.com	8131 Indiana Ave. Kansas City, MO 64132	Danny Brown	Brent Adams	CIPP - MO	6/29/2023	$2,883,974.20	100%	23329	8, 10, 12, 15, 18, 21, 24, 27, 30, 36, 42, 44, 48, 54, 66, 94 GeoKrete
20106.00	**Kansas City, MO Bannister**	Pat Wheeler, Sub to Rodriguez Mechanical Contractors P 913.238.1887 pat@rmckc.com	541 S 11 St. Kansas City, KS 66105	Danny Brown	Brent Adams	CIPP - MO	11/5/2020	$21,700.00	100%	125	18: 125
20108.00	**Spring Hill, KS CDBG Sanitary Sewer Rehab**	Todd Breuer, Sub to Utility Solutions P 913.662.7120 todd@manholerepairs.com	14612 Parallel Lane Basehor, KS 66007	Danny Brown	Brent Adams	CIPP - KS	2/5/2021	$59,211.00	100%	2193	8: 2193
20109.00	**Lawrence, KS Quik Trip #268**	Christopher Bradely, Sub to Excel Constructors P 913.927.3476 chris.bradley@excelconstructors.com	8041 W 47th Street Overland Park, KS 66203	Danny Brown	Brent Adams	CIPP - KS	11/25/2020	$16,965.00	100%	45	15: 45
20110.00	**Bridgeton, MO Bonfils Drive, Brookwood Dental**	Dr. Victor Clark, Brookwood Dental Center P 636-349-1070	733 Oakwood Drive Fenton, MO 63026	Alan Stuhlsatz	Travis Jerrels	CIPP - MO	12/9/2020	$32,392.50	100%	140	8: 140
20111.00	**Jefferson County, AL 2020 AMP02 Brighton & Oakwood**	Hugh Cornell, Sub to BLD Services, LLC P 502.220.0478 hugh@bldllc.net	2424 Tyler Street Kenner, LA 70062	Tyler Partridge	Deborah Bartley	CIPP - AL	10/31/2021	$683,210.56	100%	30520	8: 30520
20112.00	**Lower Merion, PA 2020 Storm & Sanitary Sewer Lining**	Robert Campbell, Township of Lower Merion (Pennoni) P 215.327.5802 Rcampbell@Pennoni.com	75 East Lancaster Avenue Ardmore, PA 19003	Chad Rusher / Josh Grote	Brandt Childs	CIPP - PA	8/11/2022	$586,448.15	100%	8547	8: 4572, 10: 746, 12: 576, 18: 2653
20113.00	**Caltrans, CA Culvert Rehab Hwy 49**	Mike Lorang, Sub to Lorang Brothers Construction, Inc. P 530.346.8150 mike@lorangbrothers.com	1175 S. Auburn St Colfax, CA 95713	Pete Voelker	Todd Chalk	CIPP - CA	2/4/2021	$32,500.00	100%	165	24: 165
20114.00	**Ellicott City, MD Greenway Drive, Howard County**	Danny Childress, Sub to HTI Contractors P 410.781.0155 dchildress@hticontractors.com	4539 Sykesville Road Finksburg, MA 21048	Jacob Lambert	Bob Quackenbush	CIPP - MD	3/8/2021	$35,913.50	100%	222	18: 222
20115.00	**Warrensburg, MO 2021 SS Main Lining**	Jason McCarty, City of Warrensburg P 660.262.4662 jason.mccarty@warrensburg-mo.com	102A S. Holden St. Warrensburg, MO 64093	Danny Brown	Nick Pryor	CIPP - MO	5/5/2021	$146,015.00	100%	6670	8: 5754, 10: 916

SAK Construction Completed Project List

VP Job #	Project Name	Owner's Contact Information	Address	Superintendent	Project Manager	Type	Completed Date	Completed Amount	Percent Complete	Footage Complete	Diameters
20116.00	**Reno, NV NDOT, Spaghetti Bowl Xpress**	Kylie Tokunaga, Sub to Ames Q&D Constructors P 775.881.8016 kylietokunaga@amesco.com	3737 West 2100 South West Valley, UT 84120	Pete Voelker	Todd Chalk	CIPP - NV	3/15/2021	$115,017.00	100%	235	48
20117.00	**San Antonio, TX BPC Central Pkg 4A, CO-000369-01**	Cassandra Carrizales, San Antonio Water System Cell: 956.244.8267 cassandra.reynacarrizales@saws.org	2800 U.S. Hwy 281 North San Antonio, TX 78212	James Bower	Roger Terrazas	CIPP - TX	11/6/2021	$1,621,199.44	100%	12910	8, 8 (pipebursting), 10, 12, 15, 21
20118.00	**Philadelphia, PA Sheldon St.**	Loretta Mitzos, Sub to Athena Contracting P 215.990.7923 loretta@athenacontractinginc.com	1401 JFK Boulevard Philadelphia, PA 19102	Chad Rusher / Josh Grote	Brandt Childs	CIPP - PA	2/9/2022	$297,016.30	100%	2290	8: 265, 10: 455, 15: 225, 18: 450, 24: 895
20119.00	**Kissimmee, FL Collector Rds Gravity Sewer, 2328**	Sam Flowers, Sub to Garney Companies 954.695.5512 sflowers@garney.com	TOHO Water Authority 951 Marin Luther Knig Blvd Kissimmee FL 34741	Tommie Botti	Stan Krause	CIPP - FL	4/1/2022	$308,680.00	100%	6192	8, 10, 12
20120.00	**St. Louis, MO 24" RCP**	Dean Beaudry, Sub to Henkel Corporation P 636.259.4400 Deanbeaudry13@gmail.com	6901 McKissock Ave St. Louis, MO 63147	Alan Stuhlsatz	Travis Jerrels	CIPP - MO	12/29/2020	$36,620.00	100%	50	24: 50
20121.00	**Topeka, KS G-10-39 SS Improvements**	Daniel Shively, Sub to BRB Contractors P 785-290-1156 danieLump Sumhively@brbcontractors.com	620 SE Madison Topeka, KS 66607	Danny Brown	Nick Pryor	CIPP - KS	8/19/2021	$119,290.92	100%	664	30: 664
20122.00	**Warrensburg, MO CIPP**	Pamela Walsh, Southern Hills HOA P 605-951-6591 southernhillswrb@gmail.com	SE 150th Rd. Warrensburg MO	Danny Brown	Nick Pryor	CIPP - MO	4/19/2021	$14,190.00	100%	660	8: 660
20123.00	**Pittsburgh, PA Rehab of the Lower Saw Mill Run**	Shawn McWilliams, Allegheny County Sanitary Authority P 412.812.1981 Shawn.McWilliams@alcosan.org	3300 Preble Avenue Pittsburgh, PA 15233	Chad Rusher / Josh Grote	Ken Sprau	CIPP - PA	3/1/2023	$9,519,670.60	100%	16951	42, 48
20125.00	**Eureka County, NV NDOT 3849, Emigrant Pass**	Brett Amesbury, Sub to Q & D Construction, Inc. P 775.353.7114 bamesbury@qdconstruction.com	1050 S. 21st St. Sparks, NV 89431	Brandon Smith	Todd Chalk	CIPP - NV	9/16/2021	$861,285.00	100%	1917	24, 30, 36, 48, 60, 72
21001.00	**Avondale, AZ B&F Contracting, CIPP**	John Norton, Sub to B & F Contracting, Inc. P 623.217.7763 jnorton@bfcontracting.com	11011 N. 23rd Ave. Phoenix, AZ 85029	Brandon Smith	David Burbank	CIPP - AZ	1/31/2021	$61,733.00	100%	1611	8: 1505, 10: 106
21002.00	**Golden, CO MillerCoors**	Patrick LeClair, Sub to Vortex Industrial P 616-502-2507 pleclair@vortexcompanies.com	9155 Wallisville Rd. Houston, TX 77029	Brad Schenning	Chris Vogt	CIPP - CO	7/19/2021	$384,826.00	100%	397	10: 243, 15: 154
21003.00	**Douglsville, GA Echo Lake Phases C & D Rehab**	Scott Wilder, Douglasville-Douglas County Water & Sewer Authority P 770.920.3895 swilder@ddcwsa.com	8763 Hospital Drive Douglasville, GA 30134	Glenn Spears / John Glick	Brian Ackerman	CIPP - GA	9/30/2021	$1,255,555.00	100%	6600	30: 6600
21004.00	**Phoenix, AZ 23rd Ave & Dunlap**	Jeff Hyatt, Salt River Project P 602.600.7004 Jeff.Hyatt@srpnet.com	PO Box 52025 Phoenix, AZ 85072	Brandon Smith	David Burbank	CIPP - AZ	1/25/2021	$58,113.00	100%	143	24: 143
21005.00	**Dalton, GA 2021 Sewer Rehabilitation Project**	Ccharlie Morrow, Dalton Utilities P 706.529.1176 cmorrow@dutil.com	1200 VD Parrott Jr. Pkwy Dalton, GA 30721	Glenn Spears /	John Sybrandt	CIPP - GA	3/31/2022	$989,066.33	100%	21314	8: 19689, 12: 1625
21006.00	**Napa, CA 66" Trunk Sewer**	Karl Ono, Napa Sanitation District P 707.258.6013 kono@napasan.com	1515 Soscal Ferry Rd Napa, CA 94558	Brandon Smith / Pete Voelker	Todd Chalk	CIPP - CA	11/5/2021	$6,040,839.91	100%	6879	66
21007.00	**Wyandotte County, KS Sanitary Sewer Repair**	Joe Barnes, Sub to Rodriquez Mechanical Contractors P 913.232.6002 jbarnes@wycokck.org	50 Market Street Kansas City, KS 66118	Danny Brown	Brent Adams	CIPP - KS	6/22/2022	$1,248,390.55	100%	40543	8, 10, 12, 15, 18, 21, 24, 30, 36
21009.00	**St. Louis, MO MSD FY21, A, 21982, 12508-015.1**	Steve Welnick, Metropolitan STL Sewer District P 314.768.6378 swelnick@stlmsd.com	2350 Market St. St. Louis, MO 63103	Alan Stuhlsatz	Travis Jerrels	CIPP - MO	3/7/2024	$3,091,579.02	100%	63171	6, 8, 10, 12, 15, 18, 48
21010.00	**Casa Grande, AZ CIPP Project**	Jason DeCarlo, Sub to Ellison-Mills Construction, LLC P 520.858.6160 jdecarlo@ellison-mills.com	3152 N Lear Ave, Ste #2 Casa Grande, AZ 85122	Brandson Smith	David Burbank	CIPP - AZ	3/12/2021	$25,200.00	100%	328	8: 328
21011.00	**Topeka, KS T-291066.04 Roosevelt St. Interceptor Munson**	Ethan Meyer, City of Topeka P 316.670.4450 ethan.meyer@bartwest.com	3425 NW Waterworks Drive Topeka, KS 66606	Danny Brown	Brent Adams	CIPP - KS	6/28/2021	$2,134,004.10	100%	3011	14, 18, 24, 36, 42,
21013.00	**Rehoboth Beach, DE King Charles**	Kevin Williams, City of Rehoboth Beach P 302.227.6181 X621 kwilliams@cityofrehoboth.com	229 Rehoboth Ave. Rehoboth Beach, DE 19971	Neil Soriano	Ken Sprau	CIPP - DE	3/25/2021	$225,141.30	100%	3818	8: 451, 10: 674, 15: 2693
21014.00	**St. Louis, MO Jefferson & I-64, 20-039**	Justin Cline, Sub to KCI Construction Company P 614.200.6472 jcline@kciconstruction.com	10315 Lake Bluff Drive St. Louis, MO 63123	John Price	Travis Jerrels	CIPP - MO	4/23/2021	$314,909.25	100%	701	48
21015.00	**Decatur, IL South Shores Sewer Rehab**	Don Miller, Sanitary District of Decatur P 217-422-6931 DonM@sddcleanwater.org	501 Dipper Lane Decatur, IL 62522	Jason Laney	Nick Pryor	CIPP - IL	5/25/2022	$8,412,253.56	100%	17667	12, 18, 30, 36, 42, 47x26 Eliptical
21016.00	**North Las Vegas, NV Losee Rd. & Cheyenne**	Jake Marshall, Sub to Las Vegas Paving Corp. 702. 251.5800 jake.marshall@lvpaving.com	4420 S. Decatur Blvd. Las Vegas, NV 89103	Brandon Smith / Fernando	Leo Calvario	CIPP - NV	7/16/2021	$1,691,957.95	100%	10270	15: 1050, 18: 928, 21: 343, 33: 7949
21017.00	**Washoe County, NV NDOT 3858, Mt Rose Hwy**	Brett Amesbury, Sub to Q & D Construction, Inc. P 775.353.7114 bamesbury@qdconstruction.com	1050 S. 21st St. Sparks, NV 89431	Brandon Smith / Pete Voelker	Todd Chalk	CIPP - NV	10/25/2021	$382,732.00	100%	1411	18: 169, 24: 954, 36: 288
21018.00	**Kansas City, MO 1400 Baltimore Ave.**	Pat Wheeler, Sub to Rodriguez Mechanical Contractors P 913.238.1887 pat@rmckc.com	541 S 11th Street Kansas City, KS 66105	Danny Brown	Brent Adams	CIPP - MO	5/7/2021	$15,000.00	100%	42	12: 42
21020.00	**Sacramento, CA CSS Pipe Rehab Under 1-5**	James Yorita, City of Sacramento P 916.808.1911 jyorita@cityofsacramento.org	1395 35th Ave Sacramento, CA 95822	Brandon Smith / Pete Voelker	Todd Chalk	CIPP - CA	11/18/2021	$840,688.00	100%	544	84
21021.00	**Bluffdale, UT Rivr Bottom Improvement, S Valley Sewer Dis**	Matthew Garn, South Valley Sewer P 801.571.1166 matthewg@svsewer.com	1253 West Jordon Basin Lane Bluffdale, UT 84065	Gary Rodgers	Todd Chalk	CIPP - UT	11/12/2021	$4,380,404.00	100%	11899	12, 14, 24, 30, 42, 48, 54
21022.00	**Warrensburg, MO 532 Edgewood Dr.**	William Graves, City of Warrensburg P 660-864-5223 william@warrensburg-mo.com	102A S. Holden St. Warrensburg, MO 64093	Danny Brown	Nick Pryor	CIPP - MO	4/29/2021	$19,980.00	100%	148	15: 148
21024.00	**Santa Clara, CA Emergency SS Repair at Great Ame**	Ahmed Aly, City of Santa Clara P 408.615.2014 aaly@santaclaraca.gov	1500 Warburton Ave Santa Clara, CA 95050	Brandon Smith	Todd Chalk	CIPP - CA	9/20/2021	$288,482.40	100%	900	30: 400, 39: 500

SAK Construction Completed Project List

VP Job #	Project Name	Owner's Contact Information	Address	Superintendent	Project Manager	Type	Completed Date	Completed Amount	Percent Complete	Footage Complete	Diameters
21025.00	**St. Louis, MO IR 2021, B, 21952, 13015-015.1**	Steve Welnick, Metropolitan STL Sewer District P 314.768.6378 swelnick@stlmsd.com	2350 Market St. St. Louis, MO 63103	Alan Stuhlsatz	Travis Jerrels	CIPP - MO	12/19/2022	$2,454,291.00	100%	46269	6, 8, 10, 12, 15, 18, 21, 24, 30, 66
21026.00	**St. Charles County, MO 2021 Storm Sewer Lining, 21-058**	Tom Reitz, St. Charles County Highway Department P 636-949-7305 Treitz@sccmo.org	301 N. Third St. St. Charles, MO 63301	John Price	Travis Jerrels	CIPP - MO	8/11/2021	$67,939.00	100%	390	36: 390
21027.00	**San Antonio, TX BPC West Pkg 6A, CO-00406-01**	Veronica Sanchez, San Antonio Water System Cell: 210.419.8900 veronica.sanchez2@saws.org	2800 U.S. Hwy 281 North San Antonio, TX 78212	James Bower	Roger Terrazas	CIPP - TX	2/19/2022	$1,356,206.74	100%	4709	27: 2246, 30: 208, 36: 2255
21028.00	**Cape Girardeau, MO Abe Stuber Track SEMO**	Vince Kelley, Sub to Nip Kelley Equipment Co. P 573-334-0553 vkelley@nipkelleyco.com	41 N. Sprigg St. Cape Girardeau, MO 63701	Alan Stuhlsatz	Travis Jerrels	CIPP - MO	6/11/2021	$43,800.00	100%	150	18: 150
21029.00	**Caltrans, CA 03-1H0304, Hwy 80, Replace Culverts & CIPP**	Martin Clark, State of CA Dept of Transportation P 530.218.4832 martin.clark@dot.ca.gov	33 Depot St Colfax, CA 95713	Brandon Smith / Pete Voelker	Todd Chalk	CIPP - CA	11/18/2021	$1,608,527.81	100%	3476	18: 690, 21: 56, 24: 790, 30: 1660, 36: 280
21031.00	**Searcy, AR Sewer Repairs & Rehab, Phase 1**	Roger Moreland, Sub to Heller Company, Inc. P 501.623.7241 rmoreland@sbcglobal.net	228 Castleberry Street PO Box 1438 Hot Springs, AR 71902	Tyler Partridge	Amir Alzer	CIPP - AR	11/11/2021	$434,887.00	100%	13975	6, 8, 10, 12, 15
21032.00	**St. Charles, MO Cole Creek Droste Rd.**	Michael Jerome, Sub to Bi-State Utilities Company P 314-209-0202 mjerome@bistateutilities.com	12894 Pennridge Dr Bridgeton, MO 63044	John Price	Travis Jerrels	CIPP - MO	6/17/2021	$80,250.00	100%	200	27: 200
21033.00	**Baltimore County, MD Patapsco Basin 10**	Kenneth Green, Baltimore County Dept of Public Works P 410.887.35831 kgreen@baltimorecountymd.gov	400 Washington Ave. Towson, MD 21204	Neil Soriano	Ken Sprau	CIPP - MD	6/7/2021	$3,580,904.14	100%	61215	8: 54320, 10: 2253, 12: 410, 15: 3583, 18: 649
21034.00	**Caltrans, CA Hwy 49 in El Dorado County**	Jody Phillips, State of CA Dept of Transportation P 916.799.7951 jody.phillips@dot.ca.gov	3976 Durock Road, Suite 102 Shingle Springs, CA 95682	Peter Voelker	Todd Chalk	CIPP - CA	11/3/2021	$243,372.00	100%	806	12: 112, 16: 44, 18: 390, 24: 150, 30: 110
21035.00	**Phoenix, AZ Underground Utility, Estrella Crossing Phase 1**	Michael Simmons, Sub to The Universal Group P 602.725.5073 msimmons@uui-az.com	22233 N 23rd Ave Phoenix, AZ 85027	Gary Rodgers	David Burbank	CIPP - AZ	5/28/2021	$31,500.00	100%	245	8: 245
21036.00	**New Haven, MO CIPP 2021**	Melissa Bergner, City of New Haven P 573-237-2349 melissa.bergner@newhavenmo.org	101 Front Street New Haven, MO 63068	Alan Stuhlsatz	Chris Vogt	CIPP - MO	8/17/2021	$39,521.00	100%	1527	8: 1527
21037.00	**Statesboro, GA Edgewood Sanitary Sewer CIPP**	Keith Perkins, City of Statesboro P 912.536.2266 keith.perkins@statesboroga.gov	302 Briarwood Road Statesboro, GA 30458	Glenn Spears / John Glick	John Sybrandt	CIPP - GA	10/31/2021	$716,770.00	100%	5800	30: 5800
21038.00	**Manhattan, KS 2021 CIPP SS**	Norm Francis, City of Manhattan P 785.587.4583 francisn@cityofmhk.com	1101 Poyntz Ave. Manhattan, KS 66502	Danny Brown	Brent Adams	CIPP - KS	8/15/2021	$559,997.60	100%	26796	8: 26796
21039.00	**Gardner, KS 2021 CIPP SS**	Ric Gere, City of Gardner P 913.5688123 rgere@gardnerkansas.gov	1150 E Santa Fe Street Gardner, KS 66030	Danny Brown	Brent Adams	CIPP - KS	10/19/2021	$353,567.50	100%	12092	8: 9149, 10: 2943
21040.00	**San Antonio, TX BPC West Small Dia Pkg 6A**	Estephanie Flores, San Antonio Water System Cell: 915.637.1706 estephanie.flores@saws.org	2800 U.S. Hwy 281 North San Antonio, TX 78212	James Bower	Roger Terrazas	CIPP - TX	2/19/2023	$2,834,224.90	100%	14905	6: 229, 8: 11996, 12: 1122, 15: 1060, 18: 499
21041.00	**Phoenix, AZ Sundland Ranch**	Adam Merrill, Sub to Sahuaro Contracting P 480.813.2900 adamm@sahuarocontracting.com	PO Box 2928 Gilbert, AZ 85299	Gary Rodgers	David Burbank	CIPP - AZ	5/26/2021	$70,170.00	100%	571	8: 571
21042.00	**Phoenix, AZ 23 North**	Adam Merrill, Sub to Sahuaro Contracting P 480.813.2900 adamm@sahuarocontracting.com	PO Box 2928 Gilbert, AZ 85299	Gary Rodgers	David Burbank	CIPP - AZ	1/31/2022	$38,300.00	100%	206	8: 206
21043.00	**Dothan, AL Emergency 15" CIPP Repair**	Doug Blankenship, Sub to Blankenship Contracting P 334.797.0100 doug@4-bci.com	N/A	John Glick	Amir Alzer	CIPP - AL	6/20/2022	$45,540.00	100%	396	15: 396
21044.00	**Lawrence, KS Sanitary Ph 2**	Noah Gibson, Sub to Kissick Construction Co., Inc. P 816.507.3368 noahg@kissickco.com	8131 Indiana Ave. Kansas City, MO 64132	Danny Brown	Brent Adams	CIPP - KS	6/30/2021	$36,534.00	100%	624	6: 270, 8: 354
21045.00	**Tempe, AZ The Beam on Farmer Ave**	Jeremy Sharp, Sub to McCain Construction P 623.465.1151 jeremy@mccainconstruction.com	3120 W Carefree Hwy Phoenix, AZ 85086	Garrick Rodgers	David Burbank	CIPP - AZ	7/30/2021	$107,500.00	100%	220	30: 220
21046.00	**Sacramento, CA 5th St. Combined Sewer**	James Yorita, City of Sacramento P 916.808.1911 jyorita@cityofsacramento.org	1395 35th Ave Sacramento, CA 95822	Peter Voelker	Todd Chalk	CIPP - CA	12/23/2021	$642,340.01	100%	820	60
21047.00	**Caltrans, CA Hwy 16, Yolo County**	Brian Heile, Sub to Roll'N Rock Construction, Inc. P 530.925.5365 rocknrollcon@gmail.com	5527 Truck Village Dr. Mt. Shasta, CA 96067	Fernando Avila	Todd Chalk	CIPP - CA	8/3/2021	$143,485.50	100%	647	12: 251, 18: 230, 24: 166
21049.00	**St. Louis, MO Tower Grove East Stream**	Alex Gonzalez, Sub to L Keeley Construction P 314.421.5933 agonzalez@keeleyconstruction.com	500 S Ewing Avenue Suite G St. Louis, MO 63103	Alan Stuhlsatz	Travis Jerrels	CIPP - MO	12/22/2021	$35,300.00	100%	25	36x32
21050.02	**Kansas City, MO City Wide FY 2023, Ren 1**	Paul South, City of Kansas City P 816.513.0263 paul.south@kcmo.gov	4800 E 63rd St Kansas City, MO 64130	Danny Brown	Brent Adams	CIPP - MO	1/4/2024	$8,499,998.41	100%	43748	8,10,12,15,18,21,24,27, 30,32,36,42
21051.00	**Pine Bluff, AR CIPP Rehabilitation**	David Poe, Pine Bluff Wastewater Utility P 870.718.8718 dpoe@pbw.astewater.com	1520 South Ohio Street Pine Bluff, AR 71601	Tyler Partridge	Gabe Cummings	CIPP - AR	12/15/2021	$356,617.00	100%	11130	6: 2157, 8: 8244, 15: 729
21052.00	**Caltrans, CA DIR373343; 1126256 Hwy 49**	Bruce Schumacher, Sub to Granite Construction P 559.441.5730 bruce.schumacher@gcinc.com	580 W. Beach St Watsonville, CA 95076	Pete Voelker	Todd Chalk	CIPP - CA	11/19/2021	$187,361.64	100%	756	12, 18, 24, 48
21053.00	**Lawrence, KS KU Sanitary Phase 3**	Noah Gibson, Sub to Kissick Construction Co., Inc. P 816.507.3368 noahg@kissickco.com	8131 Indiana Ave. Kansas City, MO 64132	Danny Brown	Brent Adams	CIPP - KS	7/22/2021	$119,965.00	100%	1718	6: 180, 8: 694, 10: 435, 12: 409
21054.00	**Shawnee, KS 49th & Quivira CMP Stormwater Repair**	Scott Wolters, Sub to VF Anderson Builders, LLC P 816.884.3220 vfabuilders@yahoo.com	19209 E. 231st Street Harrisonville, MO 64701	Danny Brown	Brent Adams	CIPP - KS	11/10/2021	$39,857.00	100%	451	15: 151, 18: 300

SAK Construction Completed Project List

VP Job #	Project Name	Owner's Contact Information	Address	Superintendent	Project Manager	Type	Completed Date	Completed Amount	Percent Complete	Footage Complete	Diameters
21055.00	**St. Peters, MO FY21 CIPP Lining**	Lisa Johnson, City of St. Peters P 636.477.6600 x1368 lkjohnson@stpetersmo.net	One St. Peters Centre Blvd. St. Peters, MO 63376	Alan Stuhlsatz	Travis Jerrels	CIPP - MO	9/29/2021	$315,932.25	100%	6313	8: 4875, 10: 434, 12: 1004
21056.00	**Mission, KS Lamar Ave & W 52nd St.**	Noah Gibson, Sub to Kissick Construction Co., Inc. P 816.507.3368 noahg@kissickco.com	8131 Indiana Ave. Kansas City, MO 64132	Danny Brown	Brent Adams	CIPP - KS	7/23/2021	$35,000.00	100%	160	12: 40, 15: 120
21057.00	**Yuba City, CA Starr Bend Pipe Repair**	Chris Jaeger, Sub to Chris Jaeger Construction & Testing P 530.682.0807 cjaegertesting@gmail.com	PO Box 3300 Yuba City, CA 95992	Pete Voelker	Todd Chalk	CIPP - CA	9/15/2021	$83,000.00	100%	420	15: 420
21058.00	**Caltrans, CA Excavate Embank**	Mike Niven, Sub to CCFG Construction P 209.743.4911 michaelniven10@gmail.com	17750 Wards Ferry Road Sonora, CA 95370	Pete Voelker	Todd Chalk	CIPP - CA	11/12/2021	$277,975.00	100%	1310	18: 510, 24: 800
21059.00	**Nogales, AZ Nogales Trunkline & IOI Rehab**	Crystal Cadillo, International Boundary & Water Commission P 915.832.4159 crystal.cadillo@ibwc.gov	4191 N. Mesa Street El Paso, TX 79902	Gary Rodgers / Pete Voelker	Leo Calvario	CIPP - AZ	7/21/2023	$14,194,505.00	100%	28429	24, 30, 36, 42
21060.00	**San Antonio, TX Central Pkg 7, Brackenr**	Amber Southworth, Sub to Qro Mex Construction Co., Inc. P 512.755.9712 asouthworth.gromex@gmail.com	2801 Prairie Creek Road Grantie Shoals, TX 78654	James Bower	Roger Terrazas	CIPP - TX	11/30/2021	$181,018.00	100%	582	39: 582
21061.00	**Jefferson City, MO 5803 Horseshoe Dr.**	Darrell Kolb, Sub to Stockman Construction Corp P 573.635.1316 dak@stockmancc.com	2021 Idlewood Road Jefferson City, MO 65109	Alan Stuhlsatz	Nick Pryor	CIPP - MO	9/15/2021	$32,917.50	100%	565	8: 565
21062.00	**Shawnee, KS 2021 Stormwater Pipe**	Jason Conklin, Sub to Infrastructure Solutions, LLC P 816.606.6280 jconklin@i-solutionsllc.com	9801 Renner Blvd., Suite 300 Lenexa, KS 66219	Danny Brown	Brent Adams	CIPP - KS	10/6/2022	$414,350.25	100%	5060	12: 277, 15: 2569, 18: 656, 21: 388, 24: 1026, 30: 144
21063.01	**Tyler, TX CO to 54" Black Creek Outfall**	Jeremy Orr, City of Tyler P 906.646.3299 jorr@ksaeng.com	PO Box 2039 Tyler, TX 75710	James Bower	Tommy Schultz	CIPP - TX	3/6/2025	$1,686,778.08	100%	7735	6, 8, 10, 12, 15, 42
21064.00	**Santa Clara, CA SS Repair @ UPRR & Lafayette**	Ahmed Aly, City of Santa Clara P 408.615.2014 aaly@santaclaraca.gov	1500 Warburton Ave Santa Clara, CA 95050	Pete Voelker	Todd Chalk	CIPP - CA	8/23/2021	$373,904.93	100%	950	33, 42
21065.00	**Scottsdale, AZ 630-V62A, 3297, Sewer**	Josh Onstott, Sub to B & F Contracting, Inc. P 623.582.1170 jononstott@bfcontracting.com	11011 N. 23rd Ave. Phoenix, AZ 85029	Gary Rodgers	David Burbank	CIPP - AZ	12/21/2021	$500,947.00	100%	5279	24: 5279
21066.00	**Mesa, AZ CIPP Lining**	Josh Jestes, Sub to Clearwater Pipelines P 480.494.1130 clearwater.josh@gmail.com	4255 E McDowell, Ste. 107 Mesa, AZ 85215	Gary Rodgers	David Burbank	CIPP - AZ	7/21/2023	$153,980.00	100%	2178	8: 225, 12: 1953
21068.00	**Manteca, CA 2014 North Manteca Trunk Sewer Project**	Jeff Graham, Sub to Mozingo Construction, Inc. P 209.493.6915 jgraham@mozingoconstruction.com	751 Wakefield Court Oakdale, CA 95361	Brandon Smith/ Pete Voelker	Todd Chalk	CIPP - CA	12/3/2021	$680,000.00	100%	1298	54
21069.00	**Kansas City, MO Midwest Captal Mortgage, NW 84th Terrace**	Ryan Chambers, Midwest Capital Mortgage P 816.545.9005 rchambers@mtg-group.com	1201 Landmark Ave, Ste 3 Liberty, MO 64068	Danny Brown	Brent Adams	CIPP - MO	9/14/2021	$28,900.00	100%	700	8: 700
21070.00	**Stockton, CA UW17026, Navy Dr. @ 1-5 Sewr Trunk Line**	Rosa Alvarez, City of Stockton P 209.937.8134 rosa.alvarez@stocktongov.com	22 E. Weber Avenue, Room 301 Stockton, CA 95202	Brandon Smith/ Pete Voelker	Todd Chalk	CIPP - CA	2/28/2023	$2,641,841.00	100%	1812	42, 54
21071.00	**Charlotte, NC Sugar Creek 78" SS Rehab**	Mike Wirth, City of Charlotte 704.995.7487 mike.wirth@charlotteenc.gov	5100 Brookshire Boulevard Charlotte, NC 28216	Glenn Spears	Brian Ackerman	CIPP - NC	9/15/2022	$6,198,558.78	100%	2700	78
21072.00	**Las Vegas, NV Sandhill Relief Sewer Rehab**	Jake Marshall, Sub to Las Vegas Paving Corp P 702.251.5800 jake.marshall@lvpaving.com	4420 S. Decatur Blvd. Las Vegas, NV 89103	Fernando Avila	Leo Calvario	CIPP - NV	6/30/2022	$2,467,335.35	100%	10460	18, 33 39, 42, 45
21073.00	**Athens, AL Swan Creek Trunk Sewer**	Jimmy Junkin, City of Athens P 256.233.8014 jjunkin@athens-utilities.com	1806 Wilkinson Drive Athens, AL 35612	Tyler Partridge	Gabe Cummings	CIPP - AL	8/21/2023	$725,215.00	100%	10550	6: 1335, 8: 2055, 12: 1005, 15: 2200, 18: 3955
21074.00	**Lenexa, KS Lenexa Oak Hill Storm Drainage**	Scott Walters, Sub to VF Anderson Builders, LLC P 816.935.9852 vfabuilders@yahoo.com	19209 E 231st Street Harrisonville, MO 64701	Danny Brown	Nick Pryor	CIPP - KS	3/15/2022	$811,829.00	100%	5932	15, 18, 21, 24, 27, 30, 36, 42
21075.00	**St. Louis, MO Dammert & Broadway**	Cory Bates, Sub to Bates Utility Company P 636.3959.5628 corybates@batesutility.net	841 Westwood Industrial Park Dr. Weldon Springs, MO 63304	Alan Stuhlsatz	Travis Jerrels	CIPP - MO	9/14/2021	$40,581.00	100%	460	8: 74, 12: 126, 15: 67, 18: 193
21076.00	**Phoenix, AZ Harmony at the Park**	Jeremy Sharp, Sub to McCain Construction P 623.465.1151 jeremy@mccainconstruction.com	3120 W Carefree Hwy Phoenix, AZ 85086	Gary Rodgers	David Burbank	CIPP - AZ	8/21/2023	$54,580.00	100%	783	8: 783
21077.00	**San Antonio, TX BPC Central Large Dia Pkg 1A, CO-0043201**	Veronica Sanchez, San Antonio Water System P 210.419.8900 veronica.sanchez2@saws.org	2800 U.S. Hwy 281 North San Antonio, TX 78212	James Bower	Roger Terrazas	CIPP - TX	3/10/2022	$394,123.52	100%	678	30: 678
21078.00	**North Kansas City, MO Emergency 30" CIPP**	Chris Cooper, City of North Kasas City P 816.277.2342 ccooper@nkc.org	2010 Howell Street North Kansas City, MO 64116	Danny Brown	Brent Adams	CIPP - MO	9/28/2021	$33,475.00	100%	30	30: 30
21079.00	**Independence Township, MI Pipeline Mgmt, CIPP**	David Lusky, Sub to Pipeline Management Co., Inc. P 248.685.1500 dlusky@pipeline.us.com	2673 E. Maple Road Milford, MI 48381	Alan Stuhlsatz	Nick Pryor	CIPP - MI	11/15/2021	$59,046.00	100%	1562	8: 1562
21080.00	**Ozark, MO 2021 Sanitary Sewer Rehabilitation**	Mark Blair, PE, City of Ozark P 417.595.4108 mblair@cochraneng.com	2804 North Biagio Street Ozark, MO 65721	Danny Brown	Nick Pryor	CIPP - MO	12/15/2021	$280,014.50	100%	5895	8: 5895
21082.00	**Franklin, TN Sewer Later Rehab**	Hugh Cornell, Sub to BLD Services, LLC P 502.220.0478 hugh@bldllc.net	2424 Tyler Street Kenner, LA 70062	John Glick	Gabe Cummings	CIPP - TN	12/31/2021	$356,000.00	100%	2000	24: 2000
21083.00	**Hazelwood, MO Boeing Storm Drain Clean & TV**	Ben Blackman, Sub to Ben Hur Construction P 314.218.2128 jbj@benhurconstruction.com	2191 Lemay Ferry Road, Suite 200 St. Louis, MO 63125	Alan Stuhlsatz	Travis Jerrels	CIPP - MO	12/14/2021	$34,200.00	100%	160	18: 160
21084.00	**Omaha, NE 19th, Jackson St. and St. Mary's Ave Cave-in**	Jesse Walz, City of Omaha P 531.600.6766 jessew@roloffinc.com	10204 S. 152nd Street Omaha, NE 68138	Danny Brown	Nick Pryor	CIPP - NE	11/18/2021	$185,393.00	100%	420	36: 420
21085.00	**Topeka, KS Fairview & Cedarcrest**	Jeremy Schmidtein, Sub to Schmidtlein Excavating, Inc. P 785.357.7354 jeremys@schmidetleinexcavating.com	204 NE Rice Road Topeka, KS 66616	Danny Brown	Brent Adams	CIPP - KS	12/2/2021	$70,516.00	100%	244	18: 244

SAK Construction Completed Project List

VP Job #	Project Name	Owner's Contact Information	Address	Superintendent	Project Manager	Type	Completed Date	Completed Amount	Percent Complete	Footage Complete	Diameters
21086.00	**Raytown, MO 2021 Sanitary Sewer Rehab**	Spencer Moore, Sub to Kissick Construction Co., Inc. P 816.699.9710 smoore@kissickco.com	8131 Indiana Ave. Kansas City, MO 64132	Danny Brown	Brent Adams	CIPP - MO	5/19/2022	$597,776.75	100%	21811	8: 17816, 10: 1867, 12: 831, 15: 1297
21087.00	**Phoenix, AZ Paradise Ln & 41st Ave.**	Victor Armendariz, Sunburst Farms Irrigation District P 602.376.4703 manager@sbfidphx.com	16040 N 43rd Avenue Glendale, AZ 85306	Gary Rodgers	David Burbank	CIPP - AZ	1/14/2022	$123,530.00	100%	1150	15: 1150
21088.00	**Tamarac, FL CIPP Lining FY22**	Jerry Robinson, City of Tamarac P 954.597.3763 jerry.robinson@tamarac.org	10101 State Street Tamarac, FL 33321	Blake Kimball	Stan Krause	CIPP - FL	8/1/2022	$433,514.00	100%	13788	8: 12863, 10: 925
21090.00	**Clinton, MO Henry County 20" Overflow Pipe**	Jay Ruf, Clinton Farms P 913.238.5750	9055 Clare Road Lenexa, KS 66227	Danny Brown	Brent Adams	CIPP - MO	9/16/2021	$16,500.00	100%	135	18: 135
21091.00	**Fort Meade, MD Sewer & MH Rehab Phase 2**	Brian Morrison, P.E., American Water Operations and Maintenance, LLC P 443.543.6428 brian.morrison@amwater.com	8680 Mapes Road Fort Meade, MD 20755	Neil Soriano	Ken Sprau	CIPP - MD	4/19/2022	$259,231.00	100%	3276	8: 1800, 10: 298, 12: 1178
21092.00	**Palm Springs, FL Well No. 10**	Andrew Klausner, Sub to Floridan Drilling Corp. P 561.714.2763 aklausner@cpsfl.org	226 Cypress Lane Palm Springs, FL 33461	Blake Kimball	Stan Krause	CIPP - FL	11/1/2022	$74,265.00	100%	610	8: 610
21093.00	**St. Louis, MO Coldwater Sanitary**	Steve Welnick, Metroploitan STL Sewer District P 314.768.6378 swelnick@stlmsd.com	2350 Market Street St. Louis, MO 63103	Alan Stuhlsatz	Travis Jerrels	CIPP - MO	7/19/2022	$2,876,288.00	100%	2642	54, 60, 66
21094.00	**Jefferson City, MO Pipe Lining Meier**	Jon Fitch, Jefferson City Diretor of Finance P 573.634.6392 jfitch@jeffcitymo.org	320 E McCarty St. Jefferson City, MO 65101	Danny Brown	Nick Pryor	CIPP - MO	3/23/2023	$554,317.00	100%	2738	15, 18, 24, 30, 36, 42, 48, 66
21096.00	**Taos, MO MAW Sanitary Lining**	Darrell Kolb, Sub to Stockman Construction Corp. P 573.635.1316 dak@stockmancc.com	2021 Idlewood Road Jefferson City, MO 65109	Alan Stuhlsatz	Nick Pryor	CIPP - MO	12/21/2021	$156,810.00	100%	3015	6: 408, 8: 2607
21097.00	**Mountain View, CA Interceptor Trunk DIR**	Ariel Morales, City of Mountain View P 650.903.6042 ariel.morales@mountainview.gov	231 N. Whisman Road Mountain View, CA 94039	Brandon Smith	Todd Chalk	CIPP - CA	10/20/2022	$2,274,767.32	100%	1065	42
21098.00	**Las Vegas, NV Annual Sanitary Sewer**	Jake Marshall, Sub to Las Vegas Paving Corp P 702.251.5800 jake.marshall@lvpaving.com	4420 S. Decatur Blvd. Las Vegas, NV 89103	Fernando Avila	Leo Calvario	CIPP - NV	6/27/2022	$470,464.00	100%	10950	8: 8900, 10: 1250, 12: 800
21099.00	**Avondale, AZ 19429-01, 4th St. Lift Station**	Adam Haun, Sub to Hunter Contracting Co., P 480.503.7485 adam.haun@huntercontracting.com	701 N Cooper Rd. Gilbert, AZ 85233	Gary Rodgers	David Burbank	CIPP - AZ	5/25/2022	$51,200.00	100%	150	30: 150
21100.00	**Yuba City, CA Garden Hwy Trunk Line Rehab Ph 1**	Nick Menezes, City of Yuba City P 530.822.4640 nmenezes@yubacity.net	1201 Civic Center Boulevard Yuba City, CA 95993	Brandon Smith/ Pete Voelker	Todd Chalk	CIPP - CA	12/30/2021	$1,189,398.00	100%	2576	42
21103.00	**Lake Jackson, TX Shy Pond Outfall-Gate W**	Steve Johnson, Velasco Drainage District P 979.427.7769 steve@velascodrainage.com	915 Stratton Ridge Rd. Clute, Texas 77531	James Bower	Tommy Schultz	CIPP - TX	11/25/2021	$184,453.79	100%	100	60
21104.00	**San Antonio, TX 5492, Commerce St.**	Sean Bradley, Sub to Jerdon Enterprise, L.P. P 830.992.1868 sean@jerdonlp.com	825 W Bitters Rd, Suite 203 San Antonio, TX 78216	Oscar Pittman	Roger Terrazas	CIPP - TX	8/8/2022	$93,064.00	100%	62	8: 62
21105.00	**Lutherville-Timonium, MD Padonia Complex**	Oswaldo Campitelli, Sub to Environmental Quality P 410.923.8680 ocampiteli@egrllc.com	1 Chruchview Rd. Millersville, MD 21108	Neil Soriano	Farooq Ahmed	CIPP - MD	11/30/2021	$29,700.00	100%	80	30: 80
21106.00	**Lawson, MO MOAW CIPP**	Spencer Moore, Sub to Kissick Construction Co., Inc. P 816.699.9710 smoore@kissickco.com	8131 Indiana Ave. Kansas City, MO 64132	Danny Brown	Brent Adams	CIPP - MO	11/24/2021	$91,648.00	100%	2917	8: 2694, 10: 223
21107.00	**Kansas City, MO 45th St. Relief**	Nate Morgan, Sub to Infrastructure Solutions P 913.577.8361 nmorgan@j-solutionsllc.com	9801 Renner Blvd., Suite 300 Lenexa, KS 66219	Danny Brown	Brent Adams	CIPP - MO	6/22/2022	$107,855.00	100%	1211	12: 907, 30: 121, 36: 183
21108.26	**WSSC, MD CI5335A17, Little Falls Basin, TO #26**	James Reed, Washington Suburban Sanitary Commission P 240.447.4623 Francell.Reed@wsscwater.com	111 West Diamond Ave. Gaithersburg, MD 20877-2108	Marco Antonelli	Zach Adcock	CIPP - MD	7/1/2023	$1,554,532.75	100%	2430	8: 2430
21109.00	**Glendale, AZ Hunter, 19412-19, Emergency Sewer Repair**	David Machado, Sub to Hunter Contracting Co., P 480.632.4969 david.machado@huntercontracting.com	701 N Cooper Rd. Gilbert, AZ 85233	Garrick Rodgers	David Burbank	CIPP - AZ	2/28/2022	$91,776.00	100%	2221	8: 607, 10: 1289, 12: 325
21110.00	**Kansas City, MO SheDigsIt, 15th St Pump Station, 1524**	Dennis Johnson, Sub to SheDigsit, LLC P 816.588.8808 dennis@shedigsit.com	600 SE Central Dr. Blue Springs, MO 64014	James Brown	Brent Adams	CIPP - MO	4/20/2022	$149,767.00	100%	2102	10: 909, 12: 565, 18: 628
21111.00	**Riverside, MO 153-025, 2021 Indian Hills CIPP Project**	Travis Hoover, City of Riverside P 816.769.1601 thoover@riversidemo.com	2950 NW Vivion Road Riveride, MO 64150	James Brown	Brent Adams	CIPP - MO	11/24/2021	$106,750.42	100%	325	21, 36, 42
21113.00	**Shawnee, KS Wiedenmann, 741, 2021 Stormwater West**	Daniel Forbes, Sub to Wiedenmann, Inc. P 816.322.1125 dan@wiedenmanninc.com	950 N Scott Belton, MO 64012	James Brown	Brent Adams	CIPP - KS	12/28/2022	$467,211.50	100%	4284	12, 15, 18, 21, 24, 30, 36, 41
21114.27	**WSSC, MD CI5335A17, Little Falls Basin, TO #27**	James Reed, Washington Suburban Sanitary Commission P 240.447.4623 Francell.Reed@wsscwater.com	111 West Diamond Ave. Gaithersburg, MD 20877-2108	Marco Antonelli	Zach Adcock	CIPP - MD	7/1/2023	$995,658.87	100%	7976	8: 6996, 10: 593, 12: 386
21115.00	**San Antonio, TX BPC Central Pkg 6, CO-00479-01**	Veronica Sanchez, San Antonio Water System P 210.419.8900 veronica.sanchez2@saws.org	2800 U.S. Hwy 281 North San Antonio, TX 78212	James Bower	Roger Terrazas	CIPP - TX	11/27/2022	$2,057,217.56	100%	10074	8: 8775, 10: 350, 12: 432, 18: 517
21116.00	**Wyandotte, KS 2019 Sanitary R & R**	Joe Barnes, Unified Government of Wyandotte P 913.573.1353 jbarnes@wycokck.org	701 N. 7th St. Kansas City, KS 66101	James Brown	Brent Adams	CIPP - KS	11/21/2023	$1,183,093.00	100%	12673	8: 7896, 10: 3042, 12: 625, 15: 956, 30: 154
21117.00	**Auburn, CA C39186, Osage Lane Culvert Liner**	Travis Conely, Pacific Gas and Electric Company P 530.537.4083 trcq@pge.com	12840 Bill Clark Way Auburn, CA 95602	Peter Voelker	Todd Chalk	CIPP - CA	11/23/2021	$104,860.00	100%	80	24: 80
21118.00	**Los Angeles County, CA 5388, S Whittier Outfall, Ph 5**	Khuram Shahm, County Sanitation District No 18 LA County P 562.908.4288 x2129 khuramshah@lacsd.org	1955 Workman Mill Road Whittier, CA 90607	Fernando Avila / Brandon	Leo Calvario	CIPP - CA	11/21/2023	$7,801,450.80	100%	13682	24, 27, 30, 51, 54

SAK Construction Completed Project List

VP Job #	Project Name	Owner's Contact Information	Address	Superintendent	Project Manager	Type	Completed Date	Completed Amount	Percent Complete	Footage Complete	Diameters
21119.00	**Cleveland, TN** **Hurst Exc., 2021 Cleveland Rehab**	Greg Stump, Sub to Hurst Excavating, LLC P 865.388.9495 greg@hurstexc.com	PO Box 5374 Knoxville, TN 37928	Tyler Partridge	Austin Preiss	CIPP - TN	5/5/2022	$504,957.00	100%	13274	8: 10316, 12: 2958
21121.00	**Trimble, MO** **Kissick, 21-104-01, MOAW Trimble Collections**	Spencer Moore, Sub to Kissick Construction Co., Inc. P 816.699.9710 smoore@kissickco.com	8131 Indiana Ave. Kansas City, MO 64132	Danny Brown	Brent Adams	CIPP - MO	11/30/2021	$60,840.00	100%	1565	8: 1565
21122.00	**Kingsport, TN** **Garney, 0629, BAE Sewer Rehab Ph II**	Brennen Weatherall, Sub to Garney Companies P 662.902.5252 gweatherall@garney.com	4509 W. Stone Dr., Kingsport, TN 37660	John Price	Brian Ackerman	CIPP - TN	6/29/2022	$1,524,072.83	100%	3696	8: 547, 12: 289, 36: 2860
21123.00	**Overland Park, KS** **VF Anderson, 86th & Lamar**	Scott Wolters, Sub to VF Anderson Builders, LLC P 816.935.9852 vfabuilders@yahoo.com	19209 E 231st Street Harrisonville, MO 64701	Danny Brown	Brent Adams	CIPP - KS	11/30/2021	$16,825.00	100%	320	14x22, 18
21124.00	**Watsonville, CA** **Don Chapin, DIR 392312, 221112, Freedom Se**	Sue Pulnam, Sub to Don Chapin Company P 831.444.4139 sputnam@donchapin.com	560 Crazy Horse Road Salinas, CA 93907	Brandon Smith	Todd Chalk	CIPP - CA	4/15/2022	$57,920.00	100%	258	8: 258
21127.00	**Phoenix, AZ** **Blucor Contracting, Hurley Ranch**	Colton Bluth, Sub to Blucor Contracting, Inc. P 480.595.8073 colton@blucor.com	6939 E Parkway North Mesa, AZ 85212	Garrick Rodgers	David Burbank	CIPP - AZ	11/19/2021	$34,100.00	100%	96	8: 96
21128.00	**San Antonio, TX** **Multiple Sewershed Pkg 18, CO-00389-01**	Terri Ruckstuhl, San Antonio Water System P 830.426.1105 terro.ruckstuhl@saws.org	2800 U.S. Hwy 281 North San Antonio, TX 78212	James Bower	Roger Terrazas	CIPP - TX	3/27/2023	$9,510,078.59	100%	16371	10,24,30,36,54,66,72
21129.00	**O'Fallon, MO** **2021 Sanitary Sewer Lining**	Jay Herigodt, City of O'Fallon P 636.379.3801 jherigodt@ofallon.mo.us	100 North Main St. O'Fallon, MO 63366	Alan Stuhlsatz	Travis Jerrels	CIPP - MO	9/23/2020	$260,403.63	100%	11338	8: 11338
21131.00	**Richmond, IN** **2021 Sewer Lining Project, 164-2021**	Elijah Welch, City of Richmond P 765.983.7483 ewelch@richmondindiana.gov	2380 Liberty Ave. Richmond, IN 47374	Bill Siebert	Chris Vogt	CIPP - IN	12/1/2022	$402,349.15	100%	10891	8: 8737, 9: 639, 10: 131, 12: 179, 18: 829, 24: 376
21132.00	**Lincoln, CA** **Teichert, 11581.00507 Turkey Creek Villages 1B**	Zachary Lopez, Sub to Teichert Construction P 916.717.4212 zlopez@teichert.com	400 Sunrise Ave. Ste 300 Roseville, CA 95667	Brandon Smith	Todd Chalk	CIPP - CA	1/17/2022	$19,600.00	100%	330	10: 330
21133.00	**Caltrans, CA** **Mitchell Johnson, 02-0J7404, Shasta County**	Mitchell Johnson, Sub to Mitchell Johnson Construction, Inc. P 530.338.8077 mitchelljohnsoninc@gmail.com	1735 Garden Ave Redding, CA 96001	Brandon Smith	Todd Chalk	CIPP - CA	4/27/2022	$217,620.00	100%	620	42
21134.00	**Phoenix, AZ** **All Utility Contr., Quik Trip 1441**	Tommy Woods, Sub to ALL Utility Contractors P 602.919.2585 allutility@cox.net	2838 N Dobson Rd. Chandler, AZ 85224	Garrick Rodgers	David Burbank	CIPP - AZ	1/20/2022	$41,580.00	100%	166	8: 166
21135.00	**Lathrop, MO** **Infrastructure Solutions, WW Collection System**	Nate Morgan, Sub to Infrastructure Solutions P 913.577.8361 nmorgan@i-solutionsllc.com	9801 Renner Blvd., Suite 300 Lenexa, KS 66219	Danny Brown	Brent Adams	CIPP - MO	12/21/2023	$110,445.00	100%	3945	8: 3060, 10: 381, 12: 504
21137.00	**WSSC, MD** **CI5335A17, Piscataway, TO #306**	Tim Brooks, Washington Suburban Sanitary Commission P 301.206.7339 timothy.brooks@wsscwater.com	2501 Lyttonsville Rd. Silver Spring, MD 20910	Marco Antonelli	Zach Adcock	CIPP - MD	2/1/2023	$1,007,720.90	100%	7176	8: 7176
21138.04	**WSSC, MD CI7064A21,CICK6851J20, Piscataway Creek TO 04-04**	Jacob Pierce, Washington Suburban Sanitary Commission 301-206-7316 jacob.pierce@wsscwater.com	14051 Sweitzer Lane Laurel, MD 20707	Matt Zellam/Marco Antonelli	Zach Adcock	CIPP - MD	11/1/2023	$524,534.61	100%	3403	8: 2716, 10: 296, 12: 391
21138.09	**WSSC, MD** **CI7064A21, Broad Creek, TO 09**	Jacob Pierce, Washington Suburban Sanitary Commission 301-206-7316 jacob.pierce@wsscwater.com	14051 Sweitzer Lane Laurel, MD 20707	Matt zellam/Marco Antonelli	Zach Adcock	CIPP - MD	11/1/2023	$1,489,921.05	100%	15537	8: 13379, 10: 1632, 14: 176, 16: 350
21140.00	**Kansas City, MO** **Kissick, Kansas City Southern RR CIPP**	Spencer Moore, Sub to Kissick Construction Co., Inc. P 816.699.9710 smoore@kissickco.com	8131 Indiana Ave. Kansas City, MO 64132	Danny Brown	Brent Adams	CIPP - MO	12/31/2021	$21,950.00	100%	483	8: 483
21141.00	**Cuba, MO** **2021 Cuba Wastewater Collection System Rehab**	Craig Bouse, City of Cuba P 573.259.1391 cbouse@ci.cuba.mo.us	407 State Hwy PP Cuba, MO 65453	Alan Stuhlsatz	Travis Jerrels	CIPP - MO	3/17/2022	$269,444.50	100%	10031	6: 784, 8: 9247
21142.00	**San Antonio, TX** **Multiple Sewershed Pkg 17A, CO-00413-01**	Estephanie Flores, San Antonio Water System P 915.637.1706 estephanie@flores@saws.org	2800 U.S. Hwy 281 North San Antonio, TX 78212	James Bower	Roger Terrazas	CIPP - TX	2/27/2023	$1,958,762.72	100%	8223	6: 256, 8: 7247, 10: 396, 12: 33, 15: 291
21143.00	**Avondale, AZ** **SRP, CIPP Parkside Village**	Luke DeLeo, Salt River Project 602.600.7004 luke.deleo@srpnet.com	PO Box 29066 Phoenix, AZ 85038	Garrick Rodgers	David Burbank	CIPP - AZ	1/26/2022	$68,310.00	100%	100	24: 100
21144.00	**St. Louis, MO** **MSD, B-C-M-M, FY22, A, 22074, 12584-015.1**	Steve Welnick, Metropolitan STL Sewer District P 314.768.6378 swelnick@stlmsd.com	2350 Market St. St. Louis, MO 63103	Alan Stuhlsatz	Travis Jerrels	CIPP - MO	9/26/2023	$2,864,673.26	100%	56637	6: 423, 8: 52537, 10: 292, 12: 58, 15: 95, 16: 100, 18: 3010, 24: 33, 36: 89
21145.00	**Lenexa, KS** **2021 Pipe Lining Project, 90058**	Tom Jacobs, City of Lenexa P 913.477.7644 tjacobs@lenexa.com	17101 W 87th St. Lenexa, KS 66219	Danny Brown	Brent Adams	CIPP - KS	8/11/2022	$473,633.25	100%	4403	15: 68, 18: 2607, 21: 737, 24: 991
21146.00	**Warrenton, MO CIPP Pipe Rehab**	Brant Johnson, City of Warrenton P 636.248.8931 bjohnson@warrenton-mo.org	200 W. Booneslick Warrenton, MO 63383	Alan Stuhlsatz	Nick Pryor	CIPP - MO	4/22/2022	$156,635.00	100%	3436	8: 3436
21147.00	**Fallon, NV** **Q&D, 16107, NDOT 3891, Downtown Fallon**	Samual Thompson, Sub to Q & D Construction, Inc. P 775.888.1440 sthompson@dot.nv.gov	310 Galletti Way Sparks, NV 89431	Brandon Smith	Todd Chalk	CIPP - NV	3/11/2022	$87,940.00	100%	79	42
21149.00	**Brentwood, CA** **Shea Homes, 39032 HN for Irrigation Rehab**	Jeff Davies, Sub to Shea Homes, Inc. P 925.809.7132 jeff.davies@sheahomes.com	1988 Sacred Mountain Lane Brentwood, CA 94513	Brandon Smith	Todd Chalk	CIPP - CA	1/14/2022	$175,000.00	100%	460	24: 460
21150.00	**Perry, MO** **Sewer System Improvements, 15-1051-000**	Mark Boss, City of Perry P 573.221.0020 mcb@klingner.com	4510 Paris Gravel Road Hannibal MO 63401	Alan Stuhlsatz	Nick Pryor	CIPP - MO	1/22/2023	$482,534.25	100%	14449	8: 14449
21151.00	**Caltrans, CA** **03A3195, Roll'N Rock, State Rte 32 Glenn Cnty**	Dwayne Grandy, California Department of Transportation P 530.713.7814 dwayne.grandy@dot.ca.gov	2535 Notre Dame Blvd. Chico, CA 95928	Brandon Smith	Todd Chalk	CIPP - CA	3/16/2022	$39,192.00	100%	123	12, 18
21152.00	**Caltrans, CA** **03A3203, Roll'N Rock, State Rte 32 Glenn Cnty**	Dwayne Grandy, California Department of Transportation P 530.713.7814 dwayne.grandy@dot.ca.gov	2535 Notre Dame Blvd. Chico, CA 95928	Brandon Smith	Todd Chalk	CIPP - CA	3/18/2022	$78,180.00	100%	224	15: 24, 18: 200

SAK Construction Completed Project List

VP Job #	Project Name	Owner's Contact Information	Address	Superintendent	Project Manager	Type	Completed Date	Completed Amount	Percent Complete	Footage Complete	Diameters
21153.00	**Humboldt County, NV Q&D, 16139, NDOT 3889, US 95**	Daniel March, Sub to Q & D Construction, Inc. P 775.302.6333 dmarch@gdconstruction.com	1050 S. 21st St. Sparks, NV 89431	Pete Voelker	Todd Chalk	CIPP - NV	9/8/2022	$453,883.00	100%	1568	18: 137, 24: 1258, 30: 173
22001.00	**Vermillion County, IN Next Composite, Duke Cayuga 42" Pipe**	Andy Woest, Sub to Next Composite Solutions P 513.446.3347 andrew.woestman@duke-energy.com	3300N State Road 63 Cayuga, IN 47928	Cory Street	Cory Street	CIPP - IN	3/1/2022	$15,618.06	100%	10	42
22002.00	**Los Angeles County, CA DIR 402690, 216th St Emergency**	Alex Manesh, LA County Sanitation District P 562.908.4288 amanesh@lacsd.org	1955 Workman Mill Road Whittier, CA 90607	Fernando Avila	Leo Calvario	CIPP - CA	6/30/2022	$1,076,599.20	100%	791	48
22003.00	**Lenexa, KS Lexington Plumbing, Sparrow Hawk College Blvd**	Tim Swigart, Sub to Lexington Plumbing P 816.739.5113 tims@lexingtonplumbing.com	1620 Troost Avenue Kansas City, MO 64108	Danny Brown	Brent Adams	CIPP - KS	2/25/2022	$67,430.00	100%	703	21: 703
22004.01	**Contra Costa County, CA Con-Quest, 107-904, CO1**	Thanh Vo, Sub to Con-Quest Contractors, Inc P 925.756.7649 thanhy@deltadiablo.org	2500 Pittsburg-Antioch Highway Antioch, CA 94509	Brandon Smith	Todd Chalk	CIPP - CA	6/4/2022	$172,000.00	100%	515	30: 515
22005.01	**Stockton, CA WM Lyles, 51.1108.055, DIR 305524, CO1**	David Calandro, Sub to WM Lyles Co. P 916.375.1833 dcalandro@wmlylesco.com	3925 Progress Dr. Rocklin, CA 957.65	Brandon Smith	Todd Chalk	CIPP - CA	11/30/2023	$614,980.00	100%	488	15, 48
22006.01	**Tucson, AZ Hunter Contracting, 21432, Work Order 1**	Guillermo Aguirre, Sub to Hunter Contracting Co., P 520.274.7301 guillermo.aguirre@huntercontracting.com	701 N Cooper Rd. Gilbert, AZ 85233	Garrick Rodgers	David Burbank	CIPP - AZ	3/1/2022	$176,999.00	100%	3587	8: 3025, 18: 294, 21: 268
22007.00	**Phoenix, AZ Hunter Contracting, 21410, 3rd St Promenade**	Jared Pittman, City of Phoenix P 480.503.7526 jared.pittman@huntercontracting.com	701 N Cooper Rd. Gilbert, AZ 85233	Garrick Rodgers	David Burbank	CIPP - AZ	1/22/2023	$55,200.00	100%	46	18: 46
22008.00	**Scottsdale, AZ Hardison Downey, 18100 Civil Scottsdale**	Kody Antsen, Sub to Hardision Downey Construction, Inc. P 480.254.3228 kantsen@harisondowney.com	1707 E Highland Ave Suite 125 Phoenix, AZ 85016	Garrick Rodgers	David Burbank	CIPP - AZ	2/6/2022	$45,000.00	100%	60	12: 60
22009.00	**Pinellas Park, FL Annual CIPP Lining, 22-016**	Dave Floyd, City of Pinellas Park P 727.647.0181 dfloyd@pinellas-park.com	6250 82nd St. Pinellas Park, FL 33781	Blake Kimball	Stan Krause	CIPP - FL	12/1/2022	$549,634.00	100%	15973	8: 15378, 10: 595
22010.00	**Rocklin, CA UNFI 24" Storm Drain Culvert CIPP**	Darrin Conley, United Natural Foods, Inc. P 916.625.4100 dconley@unfi.com	1101 Sunset Blvd. Rocklin, CA 95765	Brandon Smith	Todd Chalk	CIPP - CA	2/11/2022	$39,500.00	100%	151	24: 151
22011.00	**Caltrans, CA Lorang, 03-3J0204, Culvert Rehab Hwy 49**	David Catania, Sub to Lorang Brothers Construction, Inc. P 530.218.1752 david_catania@dot.ca.gov	138 New Mohawk Rd. Suite B Nevada City, CA 95959	Brandon Smith	Todd Chalk	CIPP - CA	1/24/2022	$42,000.00	100%	173	24: 173
22012.00	**Caltrans, CA Robert J Frank, 05A2309, State Hwy in Santa C**	Joseph Frank, Sub to Robert J. Frank Construction, Inc. P 530.222.1408 robertjfrankconstruction@hotmail.com	2806 Tarmac Road Redding, CA 96003	Brandon Smith	Todd Chalk	CIPP - CA	4/14/2022	$52,800.00	100%	66	36: 66
22013.00	**Godfrey, IL Plocher, 3952-002, ILAMW Lewis & Clark Sewer**	Mike Carlson, Sub to Plocher Construction Company P 618.654.9408 mcarlson@plocherco.com	2808 Thole Plocher Rd. Highland, IL 62249	Alan Stuhlsatz	Travis Jerrels	CIPP - IL	8/18/2022	$322,673.00	100%	9572	8: 8845, 10: 727
22015.00	**Los Angeles County, CA JF Shea, Los Coyotes Water Reclamat**	Mike Durning, Sub to JF Shea Construction, Inc. P 909.595.4397 mike.durning@jfshea.com	667 Brea Canyon Rd. Suite 30 Walnut, CA 91789	Fernando Avila	Leo Calvario	CIPP - CA	9/30/2022	$178,650.00	100%	59	60
22017.00	**Hermann, MO WW Collection System Rehab 2021-2022**	Travis Hernandez, City of Hermann P 573.364.6362 thernandez@cmarcher.com	310 East 6th St. Rolla MO 65401	Alan Stuhlsatz	Nick Pryor	CIPP - MO	9/30/2022	$120,999.00	100%	3886	8: 3886
22018.00	**Olivette, MO Keeley Construction, Olive Crossing Site Deve**	Dan Gronek, Sub to Keeley Construction Group P 314.421.5933 dgronek@keeleyconstruction.com	500 S. Ewing Ave. Suite G St. Louis, MO 63103	Alan Stuhlsatz	Travis Jerrels	CIPP - MO	4/7/2022	$15,900.00	100%	35	18: 35
22019.00	**Caltrans, CA Roll'N Rock, 02A1953, State Rte 36 Shasta Cou**	Henry Benner, Sub to Roll'N Rock Construction P 530.328.8629 henry.benner@dot.ca.gov	1657 Riverside Drive Reddng, CA 96001	Pete Voelker	Todd Chalk	CIPP - CA	6/3/2022	$116,890.00	100%	448	24: 258, 36: 190
22020.00	**Phoenix, AZ Rhino Contr., Laveen 23 DIP Sewer**	Ken Dupree, Sub to Rhino Contracting, LLC P 480.586.5174 ken@rhinocontractingaz.com	2830 E Brown Rd Bldg B Suite 17 Mesa, AZ 85213	Garrick Rodgers	David Burbank	CIPP - AZ	8/20/2022	$84,850.00	100%	510	8: 510
22021.00	**Caltrans, CA Teichert, 03-1H18U4, 11769.00; 11769.0049**	Randy Stellhorn, Sub to Teichert Construction P 530.330.2725 randy.stellhorn@dot.ca.gov	10960 West River St, Suite 101A Truckee, CA 96161	Brandon Smith	Todd Chalk	CIPP - CA	11/1/2022	$1,252,802.00	100%	2133	18, 24, 30, 42, 60
22022.00	**Ann Arbor, MI 2022 Sewer Lining Project**	Igor Kotlyar, City of Ann Arbor P 734.794.6410 ikotlyar@a2gov.org	301 E. Huron St. Ann Arbor, MI 48107	Brad Schenning	Brandon Stangle	CIPP - MI	7/1/2024	$506,942.10	100%	4755	8: 2256, 10: 2119, 12: 48, 15: 332
22023.00	**Pine Bluff, AR West Pullen Ave Splash Park**	David Poe, Pine Bluff Wastewater Utility P 870.718.8718 dpoe@pbw.astewater.com	1520 S Ohio St. Pine Bluff, AR 71601	John Price	Brian Ackerman	CIPP - AR	3/30/2022	$97,920.00	100%	160	36: 160
22025.00	**Los Angeles County, CA 216th St Relo, DIR#411710**	Alex Manesh, LA County Sanitation District P 562.908.4288 amanesh@lacsd.org	1955 Workman Mill Road Whittier, CA 90607	Fernando Avila / Brandon	Leo Calvario	CIPP - CA	3/22/2023	$6,631,131.78	100%	2949	48
22026.00	**St. Louis, MO Unnerstall, MSD 12847-015.1 Baden Cityshed**	Kent Rollins, Sub to Unnerstall Contracting Company P 636.257.3003 kerunnerstall@gmail.com	2803 W Osage St. Pacific, MO 63069	Alan Stuhlsatz	Travis Jerrels	CIPP - MO	3/22/2023	$110,328.00	100%	925	12: 69, 15: 175, 18: 166, 27: 191, 30: 324
22027.00	**Union, MO FY2021 Sanitary Sewer Rehab - CIPP**	J.D. Kelley, City of Union P 636.583.3600 ext. 1200 engineer@unionmissouri.org	10 East Locust St. Union, MO 63084	Alan Stuhlsatz	Travis Jerrels	CIPP - MO	3/22/2023	$131,751.75	100%	4501	8: 4501
22028.00	**Campbell, CA San Tomas Expressway Sewer Rehab Project**	Alan Kam, West Valley Sanitation District P 408.385.3030 Akam@westvalleysan.org	100 East Sunnyoaks Ave Campbell, CA 95008	Pete Voelker	Todd Chalk	CIPP - CA	7/11/2023	$3,062,627.00	100%	4458	24, 27, 30, 33
22030.00	**Indianapolis, IN Walsh, INDOT, I-69 Section 6 Contract 5**	Terry Stanton, Sub to Walsh Construction Company, LLC P 219.313.8453 tstanton@walshgroup.com	1260 East Summit Street Crown Piont, IN 46307	Bill Siebert	Chris Vogt	CIPP - IN	3/20/2023	$1,449,918.39	100%	524	84
22031.00	**Canton, NC Blakley Const., Evergreen Packaging**	Mike Tharp, Sub to Blakley Construction Services, LLC P 618.698.6323 mtharp@blakleyservices.com	500 Arlington Avenue Nashville, TN 37210	Danny Brown	Brent Adams	CIPP - NC	4/12/2022	$131,600.00	100%	340	8: 340

SAK Construction Completed Project List

VP Job #	Project Name	Owner's Contact Information	Address	Superintendent	Project Manager	Type	Completed Date	Completed Amount	Percent Complete	Footage Complete	Diameters
22032.00	**Dothan, AL** **22-034, Beaver Creek Trunk Line Rehab**	Kenny Sanders, Poly Engineering P 334.944.2470 ksanders@poly-inc.com	1935 Headland Ave Dothan, AL 36303	John Price	Amir Alzer	CIPP - AL	12/11/2023	$8,265,955.90	100%	11520	48
22033.00	**Phoenix, AZ** **Rhino Contracting, Northpoint 43rd & Alameda**	Ken Dupree, Sub to Rhino Contracting, LLC P 480.586.5174 ken@rhinocontractingaz.com	2830 E Brown Rd. Bldg B Suite 17 Mesa, AZ 85213	Garrick Rodgers	David Burbank	CIPP - AZ	3/22/2023	$161,170.00	100%	2567	8: 2567
22034.00	**Trenton, OH** **Vortex, MolsonCoors, CP-IO#130489 TRNCY19 Drns**	Patrick LeClair, Sub to Vortex Industrial P 616-502-2507 pleclair@vortexcompanies.com	5910 Hartford St. Tampa, FL 33619	Brad Schenning	Chris Vogt	CIPP - OH	3/22/2023	$502,880.00	100%	2159	8: 107, 12: 230, 15: 1219, 18: 86, 20: 260, 24: 257
22037.00	**Lincoln, CA** **Teichert, 11444.00513 Independence Infrastruct**	Kyle Deller, Sub to Teichert Construction P 916.757.6497 kdeller@teichert.com	400 Sunrise Ave. Ste 300 Roseville, CA 95667	Pete Voelker	Todd Chalk	CIPP - CA	5/12/2022	$24,500.00	100%	343	10: 343
22038.00	**Liberty, MO N Grover St.**	Clint Parnell, City of Liberty P 816.447.8467 cparnetll@libertymo.gov	101 E Kansas Liberty, MO 64068	Danny Brown	Brent Adams	CIPP - MO	4/19/2022	$18,775.00	100%	175	8: 175
22039.00	**Nashville, TN** **Portman Residential, Nashville Ballpark Vill**	Dan Coggia, Sub to Portman Residential P 678.592.8314 dcoggia@portmanresidential.com	303 Peachtree Ave. #575 Atlanta, GA 30303	John Price	Deborah Bartley	CIPP - TN	5/31/2022	$173,650.00	100%	213	30: 213
22041.00	**Caltrans, CA** **Bay Cities, 04-4W9004, 4123**	Jeff Brandt, Sub to Bay Cities Paving & Grading P 925.687.6666 jbrandt@baycities.us	1450 Civic Ct., Bldg. # 400 Concord, CA 94520	Brandon Smith	Todd Chalk	CIPP - CA	4/29/2022	$153,000.00	100%	292	30: 292
22042.00	**Caltrans, CA** **Roll'N Rock, 02A2077, State Rte 36 Shasta Cou**	Henry Benner, Sub to Roll'N Rock Construction P 530.328.8629 henry.benner@dot.ca.gov	1657 Riverside Drive Reddng, CA 96001	Pete Voelker	Todd Chalk	CIPP - CA	6/2/2022	$131,768.00	100%	362	24: 362
22043.00	**Phoenix, AZ** **Markham, 6618-4680, Norterra P22**	Kodi Schaffer, Sub to Markham Contracting Co., Inc. kschaffer@markhamcontracting.com	22820 N 19th Ave. Phoenix, AZ 85027	Garrick Rodgers	David Burbank	CIPP - AZ	5/20/2022	$24,600.00	100%	83	8: 83
22044.00	**Phoenix, AZ** **Markham, 6618-4694, Norterra P19**	Kodi Schaffer, Sub to Markham Contracting Co. P ? kschaffer@markhamcontracting.com	22820 N 19th Ave. Phoenix, AZ 85027	Garrick Rodgers	David Burbank	CIPP - AZ	4/22/2023	$37,120.00	100%	176	8: 176
22045.00	**Sauget, IL** **Sanitary Sewer Lining, CDBG PY 2021, Phase VII**	Mike Shillito, Village of Sauget P 636.328.4514	16296 Westwoods Business Dr. Ellisville, MO 63021	Alan Stuhlsatz	Travis Jerrels	CIPP - IL	4/22/2023	$105,155.00	100%	185	36: 185
22046.00	**Sioux Falls, SD Cliff Ave. Improvements**	Ross Kuchta, City of Sioux Falls P 605.310.2533 rkuchta@stockwellengineers.com	801 Phillips Ave. Suite 100 Sioux Fall, SD 57104	Danny Brown	Brent Adams	CIPP - SD	7/22/2022	$603,445.00	100%	346	72
22047.00	**Placerville, CA** **El Dorado County Fair & Event**	Kathy Dunkak, El Dorado County Fair Association, Inc. P 530.621.5860 kathy@eldoradocountyfair.org	100 Placerville Dr. Placerville, CA 95667	Pete Voelker	Todd Chalk	CIPP - CA	5/18/2022	$377,000.00	100%	1000	48
22048.00	**Merriam, KS W Frontage Rd.**	Whitney Yates, Sub to Miles Excavating, Inc. P 913.724.1934 whitneyy@milesexcavating.com	15063 State Ave. Basehor, KS 66007	Danny Brown	Brent Adams	CIPP - KS	10/17/2022	$53,606.00	100%	137	15: 33, 30: 104
22049.00	**San Antonio, TX** **Central Sewershed Pkg 5C, 21-4516**	Jedidiah Brewer, Sub to Vortex Industrial Solutions, LLC P 615.495.9500 jbrewer@vortexcompanies.com	18150 Imperial Valley Dr. Houston, TX 77060	Jedidiah Brewer	Roger Terrazas	CIPP - TX	11/1/2022	$210,992.00	100%	542	8: 521, 36: 21
22050.00	**Daly City, CA** **Templeton, Hill, Allred, Miriam & N Ma**	Kevin McCarthy, City of Daly City P 650.991.8200 kmccarthy@dalycity.org	153 Lake Merced Blvd. Daly City, CA 94015	Brandon Smith	Todd Chalk	CIPP - CA	3/3/2023	$303,368.00	100%	100	15: 100
22051.00	**Daly City, CA CIPP, St. Francis Blvd**	Kevin McCarthy, City of Daly City P 650.991.8200 kmccarthy@dalycity.org	153 Lake Merced Blvd. Daly City, CA 94015	Brandon Smith	Todd Chalk	CIPP - CA	3/3/2023	$73,472.00	100%	708	6: 708
22052.00	**Caltrans, CA** **03-2G2904, Woodridge Rd.**	Randie Babbini, Sub to Mitchell Johnson Construction, Inc. P 530.682.4280 randie.babbini@dot.ca.gov	33 Depot St Colfax, CA 95713	Pete Voelker	Todd Chalk	CIPP - CA	5/19/2022	$25,279.07	100%	30	36: 30
22053.00	**Baltimore, MD** **Broadway Svcs, John Hopkins Bayview Campus**	Garrett Fanshawe, Sub to Broadway Services P 410.864.1061 gfanshawe@wrallp.com	801 South Caroline Street Baltimore MD 21231	Chad Rusher / Josh Grote	Zach Adcock	CIPP - MD	12/1/2022	$201,895.20	100%	2329	8: 639, 10: 1525, 12: 165
22054.00	**Lakeville, MN** **2022 Inflow & Infiltration Improvement**	Stephen Ferraro, City of Lakeville P 952.985.2793 sferraro@lakevillemn.gov	7570 179th St. West Lakeville MN 55044	Danny Brown	Nick Pryor	CIPP - MN	11/30/2022	$518,163.00	100%	7804	9: 6753, 30: 1051
22055.00	**La Cygne, KS** **Sanitary Sewer System Improvements**	Ryan Nelson, Sub to Nowak Construction, Inc. P 316.794.8898 ryan@nowakconstruction.com	200 S. Goddard Rd., Goddard, KS 67052	James Brown	Brent Adams	CIPP - KS	5/22/2023	$979,971.75	100%	33162	8: 25411, 10: 5044, 12: 2707
22056.00	**Smithville, MO** **22-16 Sanitary Sewer Rehabilitation**	Gina Pate, City of Smithville P 816.534.3600 gpate@smithvillemo.org	107 W. Main Street, Smithville, MO 64089	Bobby McIntyre	Brent Adams	CIPP - MO	5/22/2023	$157,686.70	100%	2760	8: 2760
22057.00	**Alton, IL 18" CIPP Lining**	Matt Burns, Sub to JP Burns Excavating, Inc. P 618.836.5558 matt@jpburnsexc.com	8287 Burns Rd. Plainview, IL 62685	Alan Stuhlsatz	Travis Jerrels	CIPP - IL	5/24/2022	$30,800.00	100%	130	18: 130
22059.00	**Jefferson County, AL 2021-AMP-13 Fargo Dr.**	Hugh Cornell, Sub to BLD Services, LLC P 502.220.0478 hugh@bldllc.net	21 Edenwold Rd Maddison, TN 37115	Neil Aparicio Soriano	Austin Preiss	CIPP - AL	5/22/2023	$574,783.00	100%	19331	8: 17238, 10: 2093
22060.00	**Caseyville, IL** **Capitol Oaks Sanitary Sewer Rehab Phase 4**	Randy LePere, Township of Caseyville P 618.632.2414 relepere@ctwastewater.org	1 Ecology Dr O'Fallon, IL 62269	Alan Stuhlsatz	Travis Jerrels	CIPP - IL	9/29/2022	$321,523.25	100%	5521	8: 5521
22061.00	**Marion, IA** **2022 Sanitary CIPP Project**	Jacob Hahn, City of Marion P 319.743.6340 jhahn@cityofmarion.org	1225 6th Avenue Marion, IA 52302	Danny Brown	Zachary Ericson	CIPP - IA	5/22/2023	$246,618.06	100%	8033	8: 8033
22062.00	**Owatonna, MN** **2022 CIPP Project #22007**	Andrew Sorenson, City of Owatonna P 507.774.7302 andrew.sorenson@ci.owatonna.mn.us	540 W Hills Circle Owatonna, MN 55060	Danny Brown	Zachary Ericson	CIPP - MN	5/22/2023	$340,409.00	100%	11319	8: 11319
22063.00	**Nashville, TN** **99216-C.11.02, 28th Ave. Rehab Area 2**	Dennis Petty, The Metro Nashville & Davidson County Government P 615.770.8465 dennis.petty@greshamsmith.com	222 Second Ave. South Suite 400 Nashville, TN 37201-2308	Tyler Partridge	Troy Melton	CIPP - TN	7/21/2024	$9,114,579.64	100%	33950	8: 28300, 10: 2500, 15: 1600, 18: 1100, 24: 450
22066.00	**Jefferson County, AL** **2021 AMP17, Hoover High School PS**	Tad Powell, Jefferson County Environmental Services Department P 205.957.4151 tpowell@hazenandsawyer.com	To Chase Corporate Dr. Suite 170 Birmingham, AL 35244	Neil Aparicio Soriano	Austin Preiss	CIPP - AL	3/24/2023	$2,520,578.50	100%	22722	8: 18957, 12: 2107, 15: 1658

SAK Construction Completed Project List

VP Job #	Project Name	Owner's Contact Information	Address	Superintendent	Project Manager	Type	Completed Date	Completed Amount	Percent Complete	Footage Complete	Diameters
22068.31	**WSSC, MD C15335A17, Piscataway Creek, TO 313**	Gouladral Williams, Washington Suburban Sanitary Commission P 301.206.7316 gouladral.williams@wsscwater.com	14051 Sweitzer Lane Laurel, MD 20707	Marco Antonelli	Zach Adcock	CIPP - MD	2/28/2023	$188,583.30	100%	3351	8: 3351
22069.00	**Oakley, CA Tuscany Estates**	Chris Dietrich, Sub to Garney Pacific, Inc. P 209.329.7033 cdeitrich@garney.com	324 E 11th St. Tracy, CA 95376	Brandon Smith	Todd Chalk	CIPP - CA	7/28/2022	$88,200.00	100%	220	24: 220
22070.00	**Little Rock, AR PW110544, Sewer Rehab FEMA**	Tyler Noland, Little Rock Water Reclamation Authority P 251.609.0001 tyler.nolan@arcadis.com	11 Clearwater Dr. Little Rock, AR 72204	Bobby McIntyre	Brent Adams	CIPP - AR	2/15/2023	$7,497,093.00	100%	7985	18, 42, 54
22071.00	**Chattanooga, TN S Chick Creek 2-4 linterceptor W-18-013-201**	Keith Pruett 423-643-6170 wpruett@chattanooga.gov	1250 Market Street Ste. 2100 Chattanooga, TN 37402	John Price	Brian Ackerman	CIPP - TN	4/30/2024	$30,588,275.00	100%	9248	72, 84
22072.00	**North Kansas City, MO Lexington Plumbing, The Coves**	Levi Bernard, Sub to Lexington Plumbing P 816.325.9745 levi@lexingtonplumbing.com	1620 Troost Avenue Kansas City, MO 64108	James Brown	Zachary Ericson	CIPP - MO	6/21/2022	$19,250.00	100%	110	15: 110
22073.00	**Shippensburg, PA Littleton Contractors, Shippenburg Unive**	Wick Littleton, Sub to Littleton Contractors P 215-397-8402 wlittleton@littletoncontractorsllc.com	9 River Road Conshohocken, PA 19428	Cristian Martinez	Bob Quackenbush	CIPP - PA	6/30/2022	$45,900.00	100%	497	8: 497
22074.00	**Fort Leavenworth, KS 22-039-01, AMWE-Bradley Elem**	Noah Gibson, Sub to Kissick Construction Co., Inc. P 816.507.3368 noahg@kissickco.com	8131 Indiana Ave. Kansas City, MO 64132	Danny Brown	Brent Adams	CIPP - KS	7/19/2022	$17,350.00	100%	200	8: 200
22077.01	**O'Fallon, MO 2022 Sewer Lining - STORM**	Jason Denis, City of O'Fallon P 636.379.7503 jdennis@ofallon.mo.us	401 Cool Springs Rd. O'Fallon, MO 63366	Alan Stuhlsatz	Travis Jerrels	CIPP - MO	12/5/2022	$382,104.00	100%	2211	15, 18, 24, 27, 30, 36, 54
22079.00	**Jefferson County, AL 2022 Sewer Rehabilitation**	Tad Powell, Jefferson County Environmental Services Department P 205.957.4151 tpowell@hazenandsawyer.com	Two Chase Corporate Dr. Suite 170 Birmingham, AL 35244	Tyler Partridge	Troy Melton	CIPP - AL	2/13/2024	$4,726,219.10	100%	80355	8, 10, 12, 15/16, 18, 24, 27
22081.00	**Granite City, IL Coolidge Sewer Repair Granite City School**	Eric Smith, Granite City School District P 618.451.5800 Ext. 2016 ericd.smith@gcsd0.net	3200 Maryville Rd. Granite City, IL 62040	Alan Stuhlsatz	Travis Jerrels	CIPP - IL	7/14/2022	$30,800.00	100%	273	12: 273
22082.00	**San Antonio, TX 2020 CMOM Pkg 1, CO-00486-01, Job 20-4516**	Terri Ruckstuhl, San Antonio Water System P 210.233.3534 Terri.ruckstuhl@saws.org	2800 U.S. Hwy 281 North San Antonio, TX 78212	James Bower	Roger Terrazas	CIPP - TX	11/6/2023	$10,096,123.47	100%	6409	8: 83, 24: 864, 27: 346, 33: 312, 36: 1717, 42: 1011, 48: 377, 54: 989, 60: 710
22085.00	**Frankton, IN 2225, 2022 Project**	Max Sucillia, Sub to Performances Pipelining P 630.802.8348 maxsucilla1@gmail.com	1551 W Norris Dr., Ottawa, IL 61350	Bill Siebert	Chris Vogt	CIPP - IN	7/31/2022	$452,391.00	100%	12254	8: 9405, 12: 2849
22086.00	**Sioux Falls, SD 6th & Cleveland CIPP**	John Rennich, Sub to H & W Contractinc, LLC P 605.339.8834 estimator@h-wcontracting.com	3416 Hovland Dr. Sioux Falls, SD 57107	James Brown	Brent Adams	CIPP - SD	10/14/2022	$917,000.00	100%	456	78
22087.00	**Phoenix, AZ TCST20, Saguaro Trails**	Tono Bluth, Sub to Blucor Contracting, Inc. P 480.695.6965 tono@blucor.com	21738 E Orion Way Queen Creek, AZ 85142	Garrick Rodgers	David Burbank	CIPP - AZ	7/31/2022	$33,390.00	100%	203	8: 203
22088.00	**Toledo, OH 2022 Sewer Lining, PR #10005406**	Mike Elling, City of Toledo P 419.936.2276 mike.elling@toledo.oh.gov	One Government Center Suite 2000 Toledo, OH 43604	Matt Zellam	Nick Pryor	CIPP - OH	9/28/2023	$3,275,679.00	100%	46244	8, 10, 12, 15, 20, 21, 24, 30, 36
22090.00	**Tucson, AZ Broadway Improvement**	Cody Cranz, Sub to The Ashton Company, Inc. P 520.624.5500 ccranz@ashtoncoinc.com	2727 S County Club Rd Tucson, AZ 85713	Garrick Rodgers	David Burbank	CIPP - AZ	8/12/2022	$44,790.00	100%	510	10: 510
22091.00	**Marietta, GA Maxwell Ave.**	Sub to GS Construction, Inc. 678-856-9002 dallen@gsconstruction.net	526 Lyle Circle Lawrenceville, GA 30046	Ronny Tidwell	Gabe Cummings	CIPP - GA	2/16/2023	$21,320.00	100%	41	10: 41
22092.00	**Riverside, MO 153-025, 2022 Indian Hills CIPP Project**	Travis Hoover, City of Riverside P 816.372.9004 thoover@riversidemo.com	2950 NW Vivion Road Riveride, MO 64150	James Brown	Brent Adams	CIPP - MO	10/19/2022	$81,227.13	100%	402	15: 158, 18: 244
22094.00	**Omaha, NE Sarpy County, Main St. Crossing**	John Klein, Sub to S.M. Hentges & Sons, Inc. P 612.505.6080 John.Klein@smhentges.com	650 Quaker Ave., Jordan, MN 55352	James Brown	Brent Adams	CIPP - NE	3/10/2023	$375,650.00	100%	689	36: 689
22095.00	**Caltrans, CA 03-2J7204, Caldor Fire Restora**	Jody Phillips, Sub to Verrkamp General Engineering, Inc. P 916.799.7951 jody.phillips@dot.ca.gov	3976 Durock Road, Suite 102 Shingle Springs, CA 95682	Peter Voelker	Todd Chalk	CIPP - CA	8/2/2022	$274,150.00	100%	755	18: 355, 24: 270, 30: 130
22096.00	**Jefferson City, MO MOAW 2022 CIPP**	Darrell Kolb, Sub to Stockman Construction Company P 573.635.1316 dak@stockmancc.com	2021 Idlewood Road Jefferson City, MO 65109	Alan Stuhlsatz	Nick Pryor	CIPP - MO	12/15/2022	$167,586.00	100%	2730	8: 2730
22097.00	**Caltrans, CA 1136683, 03-2J7304, Caldor Emergency**	Mark Temen, Sub to Granite Construction P 775.750.4554 mark.temen@gcinc.com	1900 Glendale Ave. Sparks, NV 89431	Peter Voelker	Todd Chalk	CIPP - CA	9/22/2022	$49,500.00	100%	120	24: 120
22098.00	**Peru, IL Ameren Remediation Former MGP**	Cody Lonas, Sub to O6 Environmental, LLC P 314.862.6671 cody.lonasO6env.com	6311 Bartmer Industrial Dr. St. Louis, MO63130	Alan Stuhlsatz	Travis Jerrels	CIPP - IL	10/13/2022	$145,700.00	100%	120	24: 120
22099.00	**Liberty, MO 22-011, 999 Wyckwood RCP Lining**	Joshua Martinez, City of Liberty 816-681-5621 jmartinez@libertymo.gov	101 East Kansas St., Liberty, MO 64068	James Brown	Brent Adams	CIPP - MO	11/7/2022	$73,171.35	100%	135	48
22103.00	**San Antonio, TX BPC East & West, Pkg 2, CO-00551-01**	Veronica Riojas, San Antonio Water System 210-233-2095 veronica.riojas@saws.org	2800 U.S. Hwy 281 North San Antonio, TX 78212	James Bower	Roger Terrazas	CIPP - TX	5/1/2024	$11,147,557.62	100%	3526	8, 12, 48, 60, 72, 90
22104.00	**Lake St. Louis, MO Sewer Pipe Lining Program**	Chris Horvath, Public Water Supply District No. 2 of St. Charles County P 636.561.3737 Ext. 108 chorvath@waterdistrict2.com	100 Water Dr. O'Fallon, MO 63366	Alan Stuhlsatz	Travis Jerrels	CIPP - MO	12/5/2022	$807,822.30	100%	28372	8: 28372
22105.00	**Richmond, IN 2022 Sewer Lining Project, 130-2022**	Elijah Welch, City of Richmond P 765.983.7483 ewelch@richmondindiana.gov	2380 Liberty Ave. Richmond, IN 47374	Bill Siebert	Chris Vogt	CIPP - IN	9/7/2022	$343,395.81	100%	6606	8: 4336, 9: 159, 10: 1133, 12: 594, 15: 218, 21: 166
22106.00	**Glendale, AZ 3857106, Arrowhead Sewer Lines**	David Cline, Sub to Achen-Gardner Engineering, LLC 480-940-1300 dcline@achen.com	550 S. 79th St. Chandler, AZ 85226	Garrick Rodgers	David Burbank	CIPP - AZ	10/12/2022	$886,695.00	100%	529	42

SAK Construction Completed Project List

VP Job #	Project Name	Owner's Contact Information	Address	Superintendent	Project Manager	Type	Completed Date	Completed Amount	Percent Complete	Footage Complete	Diameters
22107.00	**St. Louis, MO** **C-C-M-M, 2023 C, 22182, 13033-015.1**	Steve Welnick, Metrpolitan STL Sewer District P 314.768.6378 swelnick@stlmsd.com	2350 Market St. St. Louis, MO 63103	Alan Stuhlsatz	Travis Jerrels	CIPP - MO	1/16/2024	$2,310,214.73	100%	38363	8: 32195, 10: 1602, 12: 117, 15: 1414, 18: 1954, 21: 371, 24: 359, 33; 191, 36: 160
22108.00	**Tempe, AZ 8200028210, Hardy & Alameda**	Ying Xu, Salt River Project 602-236-0405 ying.xu@srpnet.com	PO Box 52025 Phoenix, AZ 85072	Pete Voelker	David Burbank	CIPP - AZ	12/15/2022	$1,383,000.00	100%	2855	36, 48
22109.00	**Zephyr Cove, NV Round Hill Pines Access**	Nick Herback, Sub to Herback General Engineering P 775.267.6800 nherback@herback.net	2531 Nowlin Road Minden, NV 89423	Peter Voelker	Todd Chalk	CIPP - NV	9/24/2022	$33,600.00	100%	110	18: 110
22110.00	**Kearney, MO** **22-055-01, Kearney Sanitary Rehab**	Noah Gibson, Sub to Kissick Construction Co., Inc. 816-507-3368 noahg@kissickco.com	8131 Indiana Ave., Kansas City, MO 64132	James Brown	Brent Adams	CIPP - MO	9/22/2023	$101,529.40	100%	3086	8: 3086
22112.00	**Belton, MO** **Belton 2022-96 Lining, Pt R**	Noah Gibson, Sub to Kissick Construction Co., Inc. 816-507-3367 noahg@kissickco.com	8131 Indiana Ave., Kansas City, MO 64132	Danny Brown	Brent Adams	CIPP - MO	2/6/2023	$363,715.50	100%	11278	8: 11278
22113.00	**Ozark, MO** **2022 Sanitary Sewer Rehabilitation, SW22-469**	Mark Blair, City of Ozark P 417.595.4108 mblair@cochraneng.com	2804 North Biagio Street Ozark, MO 65721	James Brown	Nick Pryor	CIPP - MO	9/28/2022	$315,332.00	100%	5039	8: 5039
22115.00	**San Francisco, CA 2021-03, WW-699**	Oscar Delgadillo, Sub to J. Flores Construction Company, Inc. P 510.867.0073 delgadillooscar@hotmail.com	4229 Mission St. San Francisco, CA 94112	Brandon Smith	Todd Chalk	CIPP - CA	9/28/2022	$126,323.06	100%	492	18: 327, 21: 165
22118.00	**Trimble & Lawron, MO 22-090-01, MOAW #44343**	Spencer Moore, Sub to Kissick Construction Co., Inc. 816-699-9710 smoore@kissickco.com	8131 Indiana Ave., Kansas City, MO 64132	Danny Brown	Zachary Ericson	CIPP - MO	10/4/2022	$94,695.50	100%	2221	8: 2221
22119.00	**Wyandotte County,KS 1046 S 50th Terr CIPP Lining**	Jonathan Wiles, United Government of Wyandotte County 913-573-5425 jwiles@wycokck.org	701 N. 7th St., Kansas City, KS 66101	James Brown	Brent Adams	CIPP - KS	10/1/2022	$13,114.00	100%	166	12: 166
22120.00	**Monroe, LA** **Arcadis, 30145453, WPCC Clarifier No. 3**	Pete McMaster, Sub to Arcadis, U.S., Inc. 251-545-9954 peter.mcmaster@arcadis.com	1 St. Louis, Suite 3600, Mobile, AL 36602	John Price	Brian Ackerman	CIPP - LA	11/15/2022	$209,250.00	100%	75	36: 75
22121.00	**Lee's Summit, MO SE Hackamore Dr.**	Dan Forbes, Sub to Wiedenmann, Inc. 816-322-1125 dan@wiedenmanninc.com	950 N. Scott, Belton, MO 64012	James Brown	Brent Adams	CIPP - MO	6/9/2023	$40,755.00	100%	209	15: 209
22124.00	**Diamond Springs, CA** **Lake Oaks Senior Mobile Home Community**	Shannon Mainwaring, Lake Oaks Senior Mobile Home Community P 530.676.5541 shannonm@pacbell.net	4280 Patterson Dr. Diamond Springs, CA 95619	Brandson Smith	Todd Chalk	CIPP - CA	10/24/2022	$45,000.00	100%	213	15: 173, 18: 40
22125.00	**Thomasville, GA** **Sewer Outfall Line Replacement**	Arin Howell, City Thomasville 229-668-0663 ahowell@cartersloope.com	24 1st Avenue NE, Moultrie, GA 31768	Brad Schenning	Brent Adams	CIPP - GA	11/1/2023	$2,393,618.00	100%	4327	30,48
22126.00	**San Antonio, TX** **EARZ Loop 1604 & IH-10 CO-00588-01 22-4518**	Veronica Riojas, San Antonio Water System 210-233-2095 veronica.riojas@saws.org	2800 U.S. Hwy 281 North San Antonio, TX 78212	James Bower	Roger Terrazas	CIPP - TX	3/12/2023	$3,719,171.91	100%	3966	30: 3966
22127.00	**Jackson, MO 2022 Annual SS Lining**	Anna Bergmark, City of Jackson P 573.243.2300 abergmark@jacksonmo.org	101 Court St. Jackson, MO 63755	Alan Stuhlsatz	Travis Jerrels	CIPP - MO	12/8/2022	$137,062.25	100%	3189	8: 2904, 10: 285
22129.00	**Independence, KS Lakeview Lift Station**	Ruth Bechtle, Sub to Tri-Star Utilities, Inc. 620-331-7159 Indyunderground@outlook.com	P.O. Box 903 Independence, KS 63701	Danny Brown	Zachary Ericson	CIPP - KS	12/13/2022	$303,879.45	100%	5472	8: 1113, 10: 2223, 12: 474, 15: 1662
22130.00	**Kansas City, MO Line Creek Rock Creek**	Kris Johnson, Sub to SheDigsIt, LLC 816-295-1100 kris@shedigsit.com	600 SE Central Dr., Blue Springs, MO 64014	James Brown	Brent Adams	CIPP - MO	2/7/2024	$776,311.00	100%	12587	8: 8475, 10: 915, 12: 1781, 18: 475, 24: 941
22131.00	**Baldwin, PA** **22-S2, Streets Run & Glass Run Multi**	Robert T. Firek, Borough of Baldwin P 412.882.9600 ext. 1707 rfirek@baldwinborough.org	3344 Churchview Ave. Pittsburgh, PA 15227	Matt Zellam	Ken Sprau	CIPP - PA	6/14/2024	$5,422,507.44	100%	19539	8: 3656, 12: 2565, 15: 2912, 17: 667, 18: 6931, 21: 369, 24: 2439
22132.00	**Corpus Christi, TX Emergency Old B rownsvi**	Carson N Reichert, Sub to Jhabores Construction Company, Inc. 361-852-8858 carson@jhaboresconstruction.com	6349 Leopard St. Corpus Christi, TX 78409	James Bower	Ryan Broyles	CIPP - TX	11/21/2022	$340,000.00	100%	252	42
22133.00	**Kansas City, MO Current Soccer Stadium**	Matt Anderson, Sub to Site Rite Construction 816-561-4890 matt@siterite1.com	1601 Bellefontaine Ave., Kansas City, Mo 64127	James Brown	Brent Adams	CIPP - MO	1/6/2023	$801,710.00	100%	933	48, 50
22135.00	**Lenexa, KS** **Oak Park-Century Estates Storm Drain**	Annie Jones, Sub to SB Wyatt Contracting, Inc. 816-322-6557 annie.jones@sbwyatt.com	19017 S State Rt Y Belton, MO 64012	Danny Brown/Bobby McIntyre	Zachary Ericson	CIPP - KS	4/19/2023	$756,026.50	100%	3574	15, 18, 21, 24, 36, 42, 48, 54, 60
22136.00	**Kansas City, MO 31st & Broadway**	Bob Younger, Sub to Pyramid Excavation 816-765-4464 kristin@pyramidexcavation.com	11102 Hickman Hills Dr., Kansas City, MO 64134	James Brown	Brent Adams	CIPP - MO	12/14/2022	$27,336.00	100%	402	8: 402
22137.00	**Liberty, MO** **8 Westowne, CIPP**	Spencer Moore, Sub to Kissick Construction Co., Inc. 816-699-9710 smoore@kissickco.com	8131 Indiana Ave., Kansas City, MO 64132	James Brown	Brent Adams	CIPP - MO	12/12/2022	$46,690.00	100%	290	24: 290
22138.00	**Nashville, TN** **Annual Rehab FY2020-W Nashville**	Kevin Colvett, The Metropolitan Government of Nashville and Davidson County 615-218-5891 kevin.colvett@inflodesign.com	210 25th Ave.N, 11th Floor Nashville, TN 37203	John Price	Regan Roy	CIPP - TN	9/12/2024	$9,444,707.58	100%	33950	8: 28300, 10: 2500, 15: 1600, 18: 1100, 24: 450
22139.00	**Nashville, TN Beaman Toyota CIPP**	Ilke Hanloser, Sub to I/S Engineering & Utilities, Inc. 615-405-0400 ilkeh@isenengineering.org	119 Park South Ct., Nashville, TN 37210	John Price	Regan Roy	CIPP - TN	1/31/2023	$120,615.00	100%	731	8: 731
22140.00	**St. Louis, MO** **Wolff Shopping Center CIPP**	Jon Wolff, Sub to Mary R. Wolff Real Estate Management Company P 314.991.1500 jwolff@wolffproperties.com	11456 Olvie Blvd UNIT 210 St. Louis, MO 63141	Alan Stuhlsatz	Travis Jerrels	CIPP - MO	12/15/2022	$23,450.00	100%	67	10: 67

SAK Construction Completed Project List

VP Job #	Project Name	Owner's Contact Information	Address	Superintendent	Project Manager	Type	Completed Date	Completed Amount	Percent Complete	Footage Complete	Diameters
22141.01	**Howard County, MD IFB2023-17, Contract 4400004706, Task 1**	George Gibson, Jr., Howard County DPW-Bureau of Engineering/Utility Design Division P 410.313.6194 Contact Email	7125 Riverwood Dr. Ste. B Columbia, MD 21046	Aris McGowans	Ken Sprau	CIPP - MD	1/16/2024	$57,090.00	100%	870	8: 870
22142.00	**Collinsville, IL SD22-010, 2022 Sewer Rehab**	Kevin Madden, City of Collinsville 618-346-5200 EXT. 2216 kmadden@collinsvilleil.org	125 S Center St., Collinsville, IL 62234	Alan Stuhlsatz	Travis Jerrels	CIPP - IL	4/11/2023	$216,880.50	100%	1162	8: 225, 10: 652, 12: 285
22145.00	**Phoenix, AZ Trinity Underground, Elevate on Central**	Lukas Meier, Sub to Trinity Underground, LLC 218-289-2404 lukas@trinityundergroundaz.com	4001 E Broadway Road, Suite B7 Phoenix, AZ 85040	Garrick Rodgers	David Burbank	CIPP - AZ	1/23/2023	$34,400.00	100%	56	8: 56
22146.00	**St. Charles, MO 21SWR15, Riverside Sanitary Trunkman**	Rod Harashe, City of St. Charles 636-949-3533 rod.harshe@stcharlescitymo.gov	200 N 2nd St. #2851, St. Charles, MO 63301	Alan Stuhlsatz	Travis Jerrels	CIPP - MO	5/19/2023	$1,521,806.84	100%	3851	30: 3851
22147.00	**Knoxville, TN KUB Minibasin 34A2**	Greg Stump, Sub to Hurst Excavating, LLC 865-388-9495 Greg@hurstexc.com	7603 Maynardville Pike, Knoxville, TN 37938	Levi Kurtovich	Troy Melton	CIPP - TN	4/15/2024	$663,863.20	100%	10087	8: 9348, 10: 585, 12: 154
22148.00	**Phoenix, AZ Whispering Hills CIPP Lining**	Adam Merrill, Sub to Sahuaro Contracting 480-813-2900 adamm@sahuarocontracting.com	PO Box 2928 Gilbert, AZ 85299	Gerrick Rodgers	David Burbank	CIPP - AZ	1/24/2023	$45,040.00	100%	146	8: 146
22149.00	**Phoenix, AZ 2134, 99th Ave. Logistics**	Ken Millsap, Sub to Atwater Construction 623-582-3909 ken@atwatercompanies.com	521 S 48th Street Tempe, AZ 85281	Gerrick Rodgers	David Burbank	CIPP - AZ	2/17/2023	$40,000.00	100%	200	8: 200
22150.00	**Tehama County, CA 316581, 1455, Evergreen Rd. Brid**	Brock Kernaghan, Sub to J.F. Shea Construction, Inc. 560-246-4292 brock.kernaghan@jfshea.com	17400 Clear Creek Rd. Redding, CA 96049	Brandon Smith	Todd Chalk	CIPP - CA	5/2/2023	$636,100.50	100%	550	48
23001.00	**Northmoor, MO 8" CIPP**	Joe Harris, City of Northmoor, MO 816-935-5355 joet@kc.rr.com	4907 NW Waulomis Dr. Northmoor, MO 64151	James Brown	Brent Adams	CIPP - MO	2/9/2023	$50,365.31	100%	1250	8: 1250
23002.00	**Phoenix, AZ Liberty Phase 2**	Joshua Jestes, Sub to Clearwater Pipelines 480-494-1130 clearwater.josh@gmail.com	4255 E. McDowell Road, #107 Meza, AZ 85215	Garrick Rodgers	David Burbank	CIPP - AZ	1/25/2023	$42,000.00	100%	311	8: 311
23003.00	**Nashville, TN Cayce Utility Phase 1B**	Chris Costen, Sub to Cleary Construction, Inc. 770-780-5640 chriscoston@clearyconst.com	520 Lester Ave., Nashville, TN 37210	John Price	Regan Roy	CIPP - TN	1/18/2023	$194,280.00	100%	540	36: 540
23004.00	**Godfrey, IL Villa Marie & Millspr**	Mike D. Carlson, Sub to Plocher Construction Company 618-977-0947 mcarlson@plocherco.com	2808 Thole-Plocher Rd., Highland, IL 62249	Alan Stuhlsatz	Travis Jerrels	CIPP - IL	5/18/2023	$324,441.50	100%	7472	8: 7472
23005.00	**Las Vegas, NV Annual Renewal #2**	Tim Parks, Sub to Las Vegas Paving Corp. 702-229-2178 tparks@lasvegasnevada.gov	4420 S. Decatur Blvd. Las Vegas, NV 89103	Fernando Avila	Leo Calvario	CIPP - NV	2/1/2023	$484,718.00	100%	8757	8: 7589, 10: 1168
23006.00	**Las Vegas, NV Charleston Blvd & Rancho D**	Tim Parks, Sub to Las Vegas Paving Corp. 702-229-2178 tparks@lasvegasnevada.gov	4420 S. Decatur Blvd. Las Vegas, NV 89103	Fernando Avila	Leo Calvario	CIPP - NV	2/3/2023	$2,477,740.00	100%	4670	45
23008.00	**Granite City, IL FEMA First St CIPP, P23-LAND-01**	America's Central Port District- Attn: Engineering Dept.	1635 West First Street, Granite City, IL 62040	Alan Stuhlsatz	Travis Jerrels	CIPP - IL	11/9/2023	$154,893.00	100%	1238	18: 408, 24: 830
23009.00	**San Francisco, CA Precision Eng, 5886, Various No. 54**	Christopher Bulkey-Logston, San Francisco Public Works (415)919-8063 christopher.logston@sfpdw.org	49 South Van Ness Ave., 7th floor, San Francisco, CA 94103	Pete Voelker	Todd Chalk	CIPP - CA	2/1/2023	$815,318.00	100%	27	18, 3'x5'
23011.00	**Raytown, MO Kissick, 2300801, I & I Wildwood S Area 1**	Morgan Salisbury, Sub to Kissick Construction Co., Inc. P 918.978.3511 msalisbury@kissick.com	8131 Indiana Ave. Kansas City, MO 64132	Danny Brown/Bobby McIntyre	Zachary Ericson	CIPP - Mo	10/31/2023	$619,843.25	100%	16812	8: 14804, 10: 1201, 12: 807
23012.00	**Baltimore, MD Civil Constr, Cherry Hill, SWC7776**	Jalil Abdul, Baltimore City Department of Public Works P (410)396-3440 Jalil.abdul@baltimorecity.gov	200 N. Holiday St., Room 305, Baltimore, MD 21202	Matt Zellam	Zach Adcock	CIPP - MD	8/30/2023	$901,738.00	100%	1804	54
23013.00	**Phoenix, AZ JAG Construction, 17 North**	Paul Schwanderlik, Sub to JAC Construction (623)693-5629 paul@jagconllc.com	P.O. Box 2346, Sun City, AZ 85372	Garrick Rodgers	David Burbank	CIPP - AZ	4/30/2024	$149,335.00	100%	771	8: 771
23014.00	**Worthington, MN 2023 Sanitary Sewer CIPP**	Hyunmyeong Goo, City of Worthington (507)666-5017 Hgoo@ci.worthington.mn.us	303 Ninth Street, Worthington, MN 56187	Bobby McIntyre	Brent Adams	CIPP - MN	8/31/2023	$984,309.00	100%	4607	18: 3266, 21: 534, 30: 807
23015.00	**Phoenix, AZ Sahuaro, Laveen Springs CIPP Lining**	Cameron Peterson, Sub to Sahuaro Contracting 480-813-2900 cameronp@sahuarocontracting.com	PO Box 2928 Gilbert, AZ 85299	Garrick Rodgers	David Burbank	CIPP - AZ	3/23/2023	$121,405.00	100%	679	8: 679
23016.00	**Smithville, MO RFP#23-04 Sanitary Sewer Rehab**	Mayra Toothman, City of Smithville (816)532-3897 mtoothman@smithvillemor.org	107 W. Main Street, Smithville, MO 64089	Danny Brown	Brent Adams	CIPP - MO	3/23/2023	$142,720.00	100%	4124	8: 4124
23017.00	**Belton, MO Kissick Hill St Lining**	Morgan Salisbury, Sub to Kissick Construction Co., Inc. P 918.978.3511 msalisbury@kissick.com	8131 Indiana Ave. Kansas City, MO 64132	Danny Brown/Bobby McIntyre	Zachary Ericson	CIPP - Mo	3/30/2023	$12,348.00	100%	147	8: 147
23018.00	**Los Angeles County, CA 5520, Joint Outfall B Unit 1D**	Wayne Bamossy, County Sanitation District No. 2 of Los Angeles County (310)830-8050 Ex.5823 wbamossy@lacsd.org	1955 Workman Mill Rd., Whittier, CA 90601-1400	Fernando Avila	Leo Calvario	CIPP - CA	1/25/2024	$4,668,246.69	100%	3150	57
23019.00	**Lenexa, KS Fit Excavating, Widmer/95th St to Pennycross**	Kory James, Sub to FIT Excavating 620-757-9357 office@fitexc.com	704 SW 3rd St, Topeka, KS 66603	Danny Brown/Bobby McIntyre	Zachary Ericson	CIPP - KS	8/24/2023	$938,951.61	100%	3260	15, 21, 24, 30, 42, 48, 58
23020.00	**Topeka, KS Fit Excavating, Harland Ct Sanitary Sewer**	Kory James, Sub to FIT Excavating P 620.757.9357 office@fitexc.com	315 E. 21st, Topeka, KS 66607	Danny Brown/Bobby McIntyre	Zachary Ericson	CIPP - KS	7/24/2023	$95,820.00	100%	703	8: 321, 18: 382
23022.00	**Phoenix, AZ CJ Robbins, Hillstone West**	Bob Robbins, Sub to CJ Robbins (602)456-5600 bob@cjrobbinsinc.com	6851 W Belmont Ave., Glendale, AZ 85303	Gary Rodgers	David Burbank	CIPP - AZ	3/30/2023	$42,300.00	100%	40	8: 40

SAK Construction Completed Project List

VP Job #	Project Name	Owner's Contact Information	Address	Superintendent	Project Manager	Type	Completed Date	Completed Amount	Percent Complete	Footage Complete	Diameters
23024.00	**St. Louis, MO** **MSD, Stormwater IR 2023, 22243, 13128-015.1**	Steve Welnick, Metropolitan St. Louis Sewer District (314)768-6378 swelnick@stlmsd.com	Engineering Department, 2350 Market St., St. Louis, MO 63103	Alan Stuhlsatz	Travis Jerrels	CIPP - MO	5/15/2024	$3,471,959.65	100%	27262	8: 177 10: 303, 12: 9962, 15: 4106, 18: 3781, 21: 3442, 24: 1829, 27: 1190, 30: 495, 36: 853, 42: 715, 48: 244, 54: 135, 66: 10, 72: 20
23028.00	**Parkersburg, WV** **2023-05 Stormwater Lining Project**	Adam Stout, City of Parkersburg (304)424-8400 Adam.stout@parkersburg.gov	One Government Square, P.O. Box 1627, Parkersburg, WV 26102	Matt Zellam	Zach Adcock	CIPP - WV	9/30/2023	$527,350.00	100%	1137	30: 260, 33: 877
23029.00	**Phoenix, AZ** **Pulice-FNF, 60-705, Phoenix-Casa Grande Hwy**	Arizona Department of Transportation (602)712-7221 bhughes@pffjv.com	1651 W. jackson St., 121F, Phoenix, AZ 85007	Gary Rodgers	David Burbank	CIPP - AZ	4/30/2024	$85,775.00	100%	433	12: 433
23031.00	**Montgomery, AL D269000, 2023 CIPP Rehab**	The Water Works and Sanitary Sewer Board of the City of Montgomery, Alabama (334)206-1626 <jwilks@mwwssb.com>	2000 Interstae Park Drive, Montgomery, AL 36109	Billy Gates	Dan Graham	CIPP - AL	5/17/2024	$6,646,616.37	100%	7396	42
23034.00	**Phoenix, AZ** **McCain, Harmony at the Park Two**	Jeremy Sharp, Sub to McCain Construction (623)465-1151 jeremy@mccainconstruction.com	3120 W Carefree HW, Ste 1-690, Phoenix, AZ 85086	Gary Rodgers	David Burbank	CIPP - AZ	6/30/2023	$45,300.00	100%	186	8: 186
23035.00	**Phoenix, AZ** **Boxwell Homes, Sharon Drive Townhomes**	Michael Cisek, Sub to Boxwell Homes, LLC (480)390-9994 michael@boxwellhomes.com	1730 E Northern Ave., Ste 118, Phoenix, AZ 85014+J2183	Gary Rodgers	David Burbank	CIPP - AZ	10/31/2023	$44,000.00	100%	99	8: 99
23036.00	**Placer County, CA SCN105956**	Phil Barker, County of Placer (530)886-4935 pbaker@placer.ca.gov	Placer County Department of Public Works, 11476 C Ave, Auburn, CA 95603	Pete Voelker	Todd Chalk	CIPP - CA	5/10/2023	$36,500.00	100%	110	10: 110
23037.00	**Platte County, MO Sewer CIPP Lining-2023**	Jay Norco, PE, Platte County Regional Sewer District (816)935-2777 northhillseng@gmail.com	603 East Street, Suite 110, Parkville, MO 64152	Bobby McIntyre	Brent Adams	CIPP - Mo	7/6/2023	$282,652.00	100%	1318	27: 1318
23038.00	**Papillion, NE** **2023-2024 Sewer Rehabilitation**	Derek Goff, PE, City of Papillion (402)829-1320 dgoff@papillion.org	9909 Portal Road, Papillion, NE 68046	Bobby McIntyre	Brent Adams	CIPP - NE	8/14/2023	$473,604.25	100%	11702	6: 2117, 8: 8124, 10: 1231, 24: 230
23041.00	**Santa Clara, CA** **JMB, 947, Sanitary Sewer Condition Assessm**	Faranak Mahdavi, City of Santa Clara (408)615-3061 fmahdavi@santaclaraca.gov	1500 Warburton Ave., Santa Clara CA 95050	Pete Voelker	Todd Chalk	CIPP - CA	3/18/2024	$2,959,286.03	100%	486	30: 486
23043.01	**Phoenix, AZ 4108JOC216, 158324, JOA 001**	Patrick Womack, City of Phoenix (602)534-2290 Patrick.womack@phoenix.gov	200 Washington, Phoenix, AZ 85007	Gary Rodgers	David Burbank	CIPP - AZ	6/30/2024	$1,103,201.41	100%	20159	8: 18662, 10: 1247, 12: 250
23044.00	**Waterloo, IL 2023 Sewer Lining**	Jesse Maynard, City of Waterloo, (888)464-3647 Ex. 507 jmaynard@hmengineers.com	1032 N. 6th St,. Murphysboro, IL 62966	Alan Stuhlsatz	Travis Jerrels	CIPP - IL	1/10/2024	$279,522.00	100%	4095	8, 10, 12, 16, 18, 30
23045.00	**Omaha, NE** **University of NE, 13791 UNO Utility Distr System**	Charlie Griesen, University of Nebraska 402-730-2200 cgriesen@nebraska.edu	1901 Y Street, Lincoln, NE 68588-0605	James Brown	Brent Adams	CIPP - NE	7/18/2023	$122,600.00	100%	488	12: 488
23046.00	**Orrick, MO Kissick, 23009-01, MOAW**	Noah Gibson, Sub to Kissick Construction Co., Inc. (816)363-5530 noahg@kissickco.com	8131 Indiana Avenue, Kansas City, MO 64132	Bobby McIntyre	Brent Adams	CIPP - MO	6/15/2023	$88,237.50	100%	1950	8: 1950
23047.00	**Caltrans, CA** **03-2G6604, Oroville from Ward to Old Olive**	Michael Mattson, State of California Department of Transportation (916)952-8683 michael.mattson@dot.ca.gov	2707 Notre Dame Blvd., Chico, CA	Pete Voelker	Todd Chalk	CIPP - CA	6/1/2023	$338,210.20	100%	394	24: 205, 30: 98, 36: 92
23049.00	**Caltrans, CA** **Mitchell Johnson, 02-A2184, Drainage Rehab**	Kaulie Humbert, State of California Department of Transportation (530)225-2572 kaylie.humbert@dot.ca.gov	1657 Riverside Dr., Redding, CA 96001	Pete Voelker	Todd Chalk	CIPP - CA	6/5/2023	$75,980.16	100%	194	18: 112, 24: 82
23050.00	**Nashville, TN** **22-SC-005, 6492821, Rowan Cravath**	Kevin Colvett, The Metro Government of Nashville & Davidson County (615)218-5891 kevin.colvett@inflodesign.com	222 second Avenue South, Suite 1400, Nashville, TN 37201-2308	John Price	Regan Roy	CIPP - TN	5/9/2025	$10,667,311.15	100%	44970	8: 43500, 10: 1300, 18: 170
23051.00	**Fort Worth, TX Vortex, 5th St at Carroll St.**	David Quintanilla, City of Ft. Worth Transportation (817)392-8100 Contact Email	2300 Brennan Ave., Fort Worth, TX 76106	James Bower	Roger Terrazas	CIPP - TX	7/19/2023	$73,472.00	100%	708	6: 708
23054.00	**Fort Meade, MD** **Sewer & MH Rehab 2023, Task Order 2**	Brian Morrison, American Water Military Services Group P 443.688.3156 brian.morrison@amwater.com	1 Water Street, Camden, NJ 08102	Aris McGowans	Ken Sprau	CIPP - MD	5/15/2024	$632,204.00	100%	5636	8: 4636, 12: 769, 15: 231
23056.00	**Flushing, MI Sewer Lining**	City of Flushing (248)659-5665 DPW@flushingcity.com	725 E. Main Street, Flushing, MI 48433	Ron Gaedke	Brandon Stangle	CIPP - MI	6/15/2023	$229,823.75	100%	6388	8: 5898, 10: 490
23057.00	**Howard County, MD** **Triangle, 2244, Junction Ind Park SWM Po**	Michele Monde, Howard County, MD 410-313-0844 mmonde@howardcountymd.gov	9801 Broken Land Parkway Columbia, MD 21046	Matt Zellam	Zach Adcock	CIPP - MD	8/1/2024	$141,154.00	100%	382	14: 86, 27: 296
23059.00	**Los Angeles County, CA 5538,** **Joint Outfall D Unit 5**	Donald Ton, Los Angeles County Sanitation Districts (562)908-4288 Ex. 5824 dton@lacsd.org	1955 Workman Mill Road, Whittier, CA 90601-1400	Fernando Avila	Leo Calvario	CIPP - CA	1/24/2024	$1,949,797.74	100%	2018	36, 42
23060.00	**Lenexa, KS** **I-Solutions, I10084, 79th St W of Quivira**	Brian Miller, Sub to I-Solutions, LLC P 785.224.0324 bmiller@isolutionsllc.com	17101 W 87 St Pkwy, Lenexa, KS 66219	Danny Brown/Bobby McIntyre	Zachary Ericson	CIPP - KS	9/12/2023	$297,835.00	100%	587	48, 54, 60
23061.00	**Hallsville, MO Stockman, MOAW 2023 CIPP**	Darrell Kolb, Sub to Stockman Construction Corp. P 573.635.1316	2021 Idlewood Rd. Jefferson City, MO 65109	Alan Stuhlsatz	Nick Pryor	CIPP - MO	9/30/2023	$155,914.00	100%	1901	8: 1901
23066.00	**Raymore, MO Hunter's Glen Storm Repair**	Kim Quade, City of Raymore P (816)892-3045 Kquade@raymore.com	100 Municipal Circle, Raymore, MO 64083	Bobby McIntyre	Brent Adams	CIPP - MO	9/20/2023	$205,103.00	100%	463	15: 83, 27: 32, 30: 155, 33: 193
23068.00	**Alton, IL** **JP Burns, Brown Street, ILAW**	Daron Melvin, Sub to JP Burns Excavating Inc. 618-836-5558 daron@jpburnsexc.com	9287 Burns Rd., Plainview, IL 62685	Alan Stuhlsatz	Travis Jerrels	CIPP - IL	9/28/2023	$83,020.00	100%	144	10: 51, 18: 93
23070.00	**Auburn Hills, MI** **Pipeline Mgmt, Auburn Hills CIPP**	Nandish Doshi, City of Auburn Hills (248)685-1500 nandish@pipeline.us.com	2673 E. Maple Rd., Milford, MI 48381	Ron Gaedke	Brandon Stangle	CIPP - MI	8/18/2023	$138,762.00	100%	6411	10: 6411
23071.00	**Litchfield, IL** **O6 Environmental, Amereen, Edwards St CIPP**	Nick Boss, Sub to O6 Environmental LLC (314)862-6671 nick.boss@o6env.com	6311 Bartmer Industrial Dr., St. Louis, MO 63130	Alan Stuhlsatz	Travis Jerrels	CIPP - IL	9/11/2023	$576,010.00	100%	320	36: 320

SAK Construction Completed Project List

VP Job #	Project Name	Owner's Contact Information	Address	Superintendent	Project Manager	Type	Completed Date	Completed Amount	Percent Complete	Footage Complete	Diameters
23072.00	**St. Louis, MO Harkem Baden Pkg 3**	Austin Markey, Sub to Fred M. Luth & Sons, Inc. (314)771-3892 amarkey@fredmluth.com	4516 McRee Ave., St. louis, MO 63110	Jeff Brand	Travis Jerrels	CIPP - MO	9/14/2023	$61,050.00	100%	33	8: 8, 10: 15, 12: 10
23073.00	**Shawnee, KS Kissick, 23049-02, JCW Fuel Leak**	Morgan Salisbury, Sub to Kissick Construction Co., Inc. P 918.978.3511 msalisbury@kissick.com	8131 Indiana Avr., Kansas City, MO 64132	Danny Brown/Bobby McIntyre	Zachary Ericson	CIPP - KS	8/31/2023	$129,442.00	100%	709	8: 626, 10: 83
23075.01	**McKeesport, PA CIPP, PA-American Water**	Daniel C. Haught, PA American Water Company P 724.627.3736 daniel.c.haught@amwater.com	300 Galley Rd., McMurray, PA 15317	Matt Zellam/ Tim Higby	Ken Sprau	CIPP - PA	6/5/2024	$698,392.30	100%	2024	15: 935, 24: 1088
23077.00	**Nashville, TN Garney, 3390, Hurricane Creek Pipe Improvement**	Ryan Quinn, Sub to Garney Companies 615-350-7975 rquinn@garney.com	200 Crutchfield Ave., Nashville, TN 37210	Neil Soriano	Sam Dickson	CIPP - TN	5/8/2024	$82,233.00	100%	419	8: 419
23078.00	**Mount Vernon, IL Western Gardens Sanitary Sewer**	Jonathan Younger, City of Mount Vernon 618-242-6851 jonathan.younger@mtvernon.com	1100 Main Street Mt. Vernon, IL 62864	Alan Stuhlsatz	Travis Jerrels	CIPP - IL	3/29/2024	$872,375.00	100%	188	6: 188, 8: 14729.5, 10: 2772, 12: 1035.5
23079.00	**Sikeston, MO BMU CIPP 2023**	Derek Mills, Sikeston Board of Municpal Utiltiies 573-471-3328 dmills@sbmu.net	107 East Malone Sikeston, MO 63801	Alan Stuhlsatz	Travis Jerrels	CIPP - MO	2/15/2024	$105,599.00	100%	2630	8: 2630
23080.00	**Mount Clemens, MI 072303, 2023 Sewer Rehabitation by Full Length CIPP Lining**	Frank Varicalli, City of St. Clair Shores 586-726-1234 fvaricalli@aewinc.com	1 Crocker Boulevard Mount Clemens, MI 48043	Ron Graedke	Brandon Stangle	CIPP - MI	12/31/2023	$429,005.65	100%	5799	12: 3100, 15: 900, 18: 1250, 21: 249, 24: 300
23081.00	**Royal Oak, MI S2302, 2023 Sewer Lining**	Leo Seneres, City of Royal Oak 248-246-3260 merleos@romi.gov	230 South Troy Street Royal Oak, MI 48067	Ron Gaedke	Brandon Stangle	CIPP - MI	12/9/2023	$717,534.25	100%	7570	8: 640, 10: 315, 12: 4190, 15: 1050, 18: 715, 24: 660
23083.00	**Stewartsville, MO Kissick, 23016-01, MOAW**	Noah Gibson, Sub to Kissick Construction Co., Inc. 816-507-3368 noahg@kissickco.com	8131 Indiana Ave. Kansas City, MO 64132	James Brown	Brent Adams	CIPP - MO	10/5/2023	$189,909.00	100%	3402	8: 3402
23085.00	**Frederick, MD Forestar, Renn Quarter, E Patrick & Monocacy**	Brandt Childs, Sub to Forestar (USA) Real Estate Group, Inc. 410-980-0433 BrandtChilds@forestar.com	7021 Columbia Gateway Dr., Suite 320, Columbia, MD 21046	Matt Zellam	Zach Adcock	CIPP - MD	12/1/2023	$29,500.00	100%	125	15: 125
23086.00	**Lake St. Louis, MO Dauphine Trunk Sewer Lining Project**	Kevin Hampe, Public Works Supply District No. 2 of St. Charles County 636-561-3737 Ext. 156 khampe@waterdistrict12.com	100 Water Dr., O'Fallon, MO 63368	Alan Stuhlsatz	Travis Jerrels	CIPP - MO	12/18/2023	$286,083.00	100%	2469	8: 1216, 15: 1253
23087.00	**San Antonio, TX 2021 CMOM 4, CO-00663-01, Job 22-4530**	Veronica Riojas, San Antonio Water System 210-233-2095 veronica.riojas@saws.org	2800 U.S. Hwy 281 North San Antonio, TX 78298	James Bower	Roger Terrazas	CIPP - TX	9/18/2024	$7,313,088.00	100%	7138	8: 320, 24: 2769, 30: 1067, 72: 2982
23090.00	**Kansas City, MO Kissick, N Holly Ct, Briarcliff Area**	Dylan Johnson, Sub to Kissick Construction Co. 913-231-9095 djohnson@kissickco.com	8131 Indiana Avenue Kansas City, MO 64132	James Brown	Brent Adams	CIPP - MO	9/20/2023	$53,445.00	100%	441	15: 441
23091.00	**Daly City, CA DIR 488238; 90th Street & Sullivan Ave CIPP**	Jeffrey Fornesi, City of Daly City 650-991-5752 jfornesi@dalycity.org	792 Niantic Avenue Daly City, CA 94014	Brandon Smith	Todd Chalk	CIPP - CA	9/15/2023	$59,000.00	100%	100	15: 100
23092.00	**Warrenton, MO CIP Pipe Rehab**	John Leach, City of Warrenton P 636-456-3535 Ext. 224 john.leach@warrenton-mo.org	200 W. Booneslick Rd. Warrenton, MO 63383	Alan Stuhlsatz	Nick Pryor	CIPP - MO	1/11/2024	$89,671.00	100%	2514	8: 2514
23093.00	**North Kansas City, MO Kissick, Armour & 26th Ave**	Morgan Salisbury, Sub to Kissick Construction Co. 918-978-3511 msalisbury@kissickco.com	8131 Indiana Avenue Kansas City, MO 64132	Danny Brown/Bobby McIntyre	Zachary Ericson	CIPP - MO	9/19/2023	$32,634.00	100%	259	12: 259
23095.00	**Lenexa, KS Pipe Lining - 2023, 90067**	Tom Jacobs, City of Lenexa 913-477-7644 tjacbos@lenexa.com	17101 W. 87th St. Lenexa KS 66219	Danny Brown/Bobby McIntyre	Zachary Ericson	CIPP - KS	12/12/2023	$514,029.50	100%	4526	15: 1458, 18: 1649, 21: 371, 24: 1048
23096.00	**Osceola, AR 23-5782, Elm St CIPP Wastewater**	Tim Jones, City of Oscela P 870.622.5069 tjones045@yahoo.com	303 W. Hale Ave., Osceola, AR 72370	Ronnie Tidewll	Nick Pryor	CIPP - AR	1/25/2024	$634,371.74	100%	5714	10: 3446, 12: 2022, 15: 246
23097.00	**Blue Springs, MO She Digs It, Vesper Field, BS School District**	Roland Johnson, Sub to SheDigsIt, LLC 816-714-6866 rjohnson@shedigsit.com	600 SE Central Dr. Blue Springs, MO 64014	James Brown	Brent Adams	CIPP - MO	11/8/2023	$9,800.00	100%	245	8: 245
23098.00	**St. Jospeh, MO Kissick, Evergy Lake Rd Power Plant**	Dylan Johnson, Sub to Kissick Construction Co., 913-231-9095 djohnson@kissickco.com	8131 Indiana Avenue Kansas City, MO 64132	Bobby McIntyre	Brent Adams	CIPP - MO	10/24/2023	$47,300.00	100%	75	24: 75
23099.00	**Cookeville, TN John T Hall Const, 2021 CDBG Sewer System**	Nichole Hart, Sub to John T. Hall Construction, Inc. 931-837-4842 jthalloffice@gmail.com	571 Turn Table Rd. Sparta, TN 38583	TBD	Sam Dickson	CIPP - TN	6/3/2024	$342,527.00	100%	4100	8: 4100
23100.00	**Hillsdale, MI Concord Excavating, Sanitary Sewer Improvements**	Brandon Gloar, Sub to Concord Excavating & Grading, Inc. 517-262-9029 gloarb@gmail.com	97 North Broad St. Hillsdale, MI 49242	Ron Gaedke	Brandon Stangle	CIPP - MI	8/15/2024	$141,499.00	100%	3093	8: 3093
23101.00	**Southgate, MI Emergency Sanitary Sewer Lining - Eureka Rd.**	John M. Miller, City of Southgate 734-759-1600 jmmiller@hengineers.com	13500 Reeck Road Southgate, MI 48195	Ron Gaedke	Brandon Stangle	CIPP - MI	10/15/2023	$31,710.00	100%	420	10: 420
23102.00	**Bloomfield, MI Pipeline Mgmt, Trader Joe's CIPP Lining**	Nandish Doshi, Sub to Pipeline Management Co., Inc. 248-685-1500 Nandish@pipeline.us.com	2673 E. Maple Road Milford Charter Township, MI 48381	Ron Gaedke	Brandon Stangle	CIPP - MI	2/15/2024	$76,335.00	100%	549	6: 187, 8: 362
23103.00	**Fulton County, GA Vortex, Fulton UV Lining - Webb Bridge 15" and 18" & Clay Drive 10"**	Sub to Vortex Services, Inc. 864-640-0363 ccorrigan@vortexcompanies.com	300 E. Coffee Street Greenville, SC 29601	Levi Kurtovich	Gabe Cummings	CIPP - GA	4/30/2024	$351,357.40	100%	2859	10: 1125, 12: 300, 15: 312, 18: 1122
23106.00	**St. Louis, MO MSD, Riverview Dr., 53017, 10876-015.1**	Steve Welnick, Metropolitan St. Louis Sewer District 314-768-6378 swelnick@stlmsd.com	2350 Market Street St. Louis, MO 63103	Jeff Oberhofer	Travis Jerrels	CIPP - MO	5/6/2024	$585,110.00	100%	320	72: 320
23107.00	**Danville, CA Sycamore Mill HOA, 1217 Robyn Drive**	Reece Fawley, Sycamore Mill HOA 925-324-7851 rfawley@sbcglobal.net	121 Clarita Place Danville, CA 94526	Brandon Smith	Todd Chalk	CIPP - CA	11/16/2023	$38,700.00	100%	140	15: 140

SAK Construction Completed Project List

VP Job #	Project Name	Owner's Contact Information	Address	Superintendent	Project Manager	Type	Completed Date	Completed Amount	Percent Complete	Footage Complete	Diameters
23108.00	**Peoria, AZ** **SRP, CIPP Corrie Dr to Bloomfield**	Ying Xo, Salt River Project M 602-228-4561, W 602-236-0405 ying.xu@srpnet.com	PO Box 52025 Phoenix, AZ 85072	Pete Voelker	Victor Villalobos	CIPP - AZ	2/29/2024	$267,000.00	100%	607	42
23110.00	**Olathe, KS** **Kansas Heavy, 2023 Storm Sewer**	Matt Gripka, Sub to Kansas Heavy Construction, LLC O:913-416-0034 C:913-845-2121 matt.gripka@kshvycon.com	19425 State Ave., Tonganoxie, KS, 66086	Danny Brown	Zachary Ericson	CIPP - KS	1/31/2024	$34,648.00	100%	284	15: 284
23111.00	**Lawson, MO Kissick, MOAW 2023 CIPP**	Cody Cook, Sub to Kissick Construction Co., Inc. 816-918-4572 ccook@kissickco.com	8131 Indiana Avenue Kansas City, MO 64132	Danny Brown	Brent Adams	CIPP - MO	12/7/2023	$144,244.50	100%	2793	8: 1445, 12: 792, 15: 556
23112.00	**Sedalia, MO Kissick, Monsees Lining**	Cody Cook, Sub to Kissick Construction Co., Inc. 816-918-4572 ccook@kissickco.com	8131 Indiana Avenue Kansas City, MO 64132	Danny Brown	Brent Adams	CIPP - MO	12/12/2023	$61,365.00	100%	1045	8: 1045
23113.00	**Wyandotte, MI** **4857, 2023 Downtown Sewer Slip Lining**	James Karp, City of Wyandotte 734-324-4557 jkarp@wyandottemi.gov	3200 Biddle Ave. Suite 200 Wyandotte, MI 48192	Ron Gaedke	Brandon Stangle	CIPP - MI	9/30/2024	$637,384.57	100%	6831	8: 178, 10: 794, 12: 2850, 15: 348, 18: 1564, 24: 717, 27: 380
23118.00	**Las Vegas, NV** **LV Paving, 15573, 2021 Annual Renewal #3**	Jake Marshall, Sub to Las Vegas Paving Corp. 702-251-5800 jake.marshall@lvpaving.com	4420 S. Decatur Blvd., Las Vegas, NV 89103	Fernando Avila	Leo Calvario	CIPP - NV	2/29/2024	$1,005,804.00	100%	17998	8: 16769, 10: 704, 12: 525
23119.01	**Travis AFB, CA** **Cape Environ., Amendment 2, SC013667**	Contact Name, Sub to Cape Environmental Management, Inc. P Contact Phone Number Contact Email		TBD	Todd Chalk	CIPP - CA	4/25/2025	$1,694,863.06	100%	4876	15: 331, 18: 568, 20: 390, 21: 369, 24: 1392, 30: 1826
23120.00	**Lincoln, CA** **Lund Const., 23044-SAKCON, Oak Tree & Ferrari**	Contact Name, Sub to Lund Construction Company P Contact Phone Number Contact Email		TBD	Todd Chalk	CIPP - CA	1/17/2024	$38,000.00	100%	166	24: 166
23123.01	**Indianapolis, IN 92EM06438, 62nd & Guion Emergency**	Tracey Black, Citizens Energy Group P 317.294.8582 tblack@CitizensEnergyGroup.com	2020 N. Meridian St., Indianapolis, IN 46202	Bill Seibert	Chris Vogt	CIPP - IN	1/22/2024	$171,402.33	100%	422	12: 422
23123.05	**Indianapolis, IN 92RR03211, Brooks St SDSR**	Tracey Black, Citizens Energy Group P 317.294.8582 tblack@CitizensEnergyGroup.com	2020 N. Meridian St., Indianapolis, IN 46202	Bill Seibert	Chris Vogt	CIPP - IN	3/15/2024	$96,165.20	100%	426	18: 426
23124.00	**Lee's Summit, MO** **Kadean Const., Commerce Center Bldg 1**	Jake Short, Sub to Kadean Construction 816-682-3444 Contact Email	1821 McGee Street, Kansas City, MO 64108	Danny Brown	Brent Adams	CIPP - MO	2/26/2024	$43,125.00	100%	400	12: 400
23125.00	**San Antonio, TX** **2021 CMOM 7, CO-00685-01, Job 22-4516**	Veronica Riojas, San Antonio Water System 201-233-2095 veronica.riojas@saws.org	2800 U.S. Hwy 281 North San Antonio, TX 78298	James Bower	Roger Terrazas	CIPP - TX	2/3/2025	$5,865,013.29	100%	19812	8: 15372, 10: 1064, 12: 290, 15: 2494, 21: 592
23129.00	**Jackson, MO** **2023 Annual Sanitary Sewer Lining**	Contact Name, City of Jackson P Contact Phone Number Contact Email		Alan Stuhlsatz	Travis Jerrels	CIPP - MO	3/5/2024	$192,413.75	100%	3760	8: 3760
23130.00	**Belding, MI** **Adv Rehab Tech, WW System Improvements**	Alex Lanz, Sub to Advanced Rehabilitation Technology P 419.799.1308 alex@artcoatingtech.com	525 Winzeler Dr., Unit 1 Bryan, OH 43506	Ron Gaedke	Dawn Young	CIPP - MI	5/25/2024	$119,942.00	100%	1760	8: 844, 10: 586, 18: 330
23131.00	**Medford, OR** **2024 WW Collection, MSC-D-2401**	Peter Brown, City of Medford 541-774-2617 peter.brown@cityofmedford.org	821 N. Columbus Ave. Medford, OR 97501	Peter Voelker	Todd Chalk	CIPP - OR	7/2/2024	$2,422,225.20	100%	25591	6: 1370, 8: 15111, 10: 439, 12: 3816, 15: 200, 18: 2424, 24: 1584, 30: 647
23134.00	**Decatur, IL** **23ENG51 McKinley Interceptor Repairs**	Don Miller, Sanitary District of Decatur P 217-433-4046 donm@sddcleanwater.com	501 Dipper Lane Decatur, IL 62522	Brad Schenning	Nick Pryor	CIPP - IL	6/21/2024	$848,745.00	100%	420	48: 420
23136.00	**Affton, MO** **Kelpe, MSD Gravois Creek, 12815-015.1**	Tom Kelpe, Sub to Kelpe Contracting, Inc. 636-458-1400 tkelpe@kelpe.com	P.O. Box 100, Wildwood, MO 63038	Alan Stuhlsatz	Travis Jerrels	CIPP - MO	2/21/2024	$53,750.00	100%	90	42
23137.00	**Hermann, MO** **WW Collection System Rehab 2023-2024 I&I Reduc.**	Travis Hernandez, Archer-Elgin/City of Hermann 573-364-6362 thernandez@cmarcher.com	598 18th St. Hermann, MO 65041	Alan Stuhlsatz	Nick Pryor	CIPP - MO	4/30/2024	$222,384.00	100%	3606	8: 3606
23139.00	**Santa Cruz, CA** **c401606, Front-Spruce-Pacific 54" Sewer Rehab**	Cina Seyedkazemi, City of Santa Cruz 831-420-5177 eseyedkazemi@santacruzca.gov	809 Center St., Room 201, Santa Cruz, CA 95060	TBD	Todd Chalk	CIPP - CA	12/19/2024	$4,608,525.87	100%	3250	54: 3250
23140.00	**Stockton, CA** **US24006, Brookside S Storm Pump Station**	Ckelly Sao, City of Stockton 209-937-8727 kellysao@stocktonca.gov	2500 Navy Dr., Stockton, CA 95206	TBD	Todd Chalk	CIPP - CA	9/3/2024	$143,555.00	100%	580	18: 435, 10: 145
23141.00	**Knoxville, TN** **Hurst, S1625, KUB North South Rehab**	Greg Stump, Sub to Hurst Excavating, LLC 865-388-9495 greg@hurstexc.com	202 Durham St., Soddy Daisy, TN	Ronny Tidwell	Troy Melton	CIPP - TN	4/23/2024	$351,005.70	100%	5024	8: 5024
23142.00	**Gilbert, AZ** **CNR Trucking, Union Pacific RR Bridge Replacement**	Kody Billingsley, Sub to CNR Trucking & Cattle Co., Inc. M 520-449-4258, W 520-766-1634 kody@cnrexcavation.com	759 S. Haskell Ave. Willcox, AZ 85643	Garrick Rodgers	Victor Villalobos	CIPP - AZ	2/29/2024	$95,000.00	100%	50	48
23146.00	**Michigan City, IN** **HRP, 1635, Concord Cleaners Groundwater**	Joe Saggars, HRP Construction 574-315-2331 joes@hrpconstruction.com	Medford, OR 97501	Ron Graedke	Brandon Stangle	CIPP - IN	3/1/2024	$97,857.00	100%	1113	10: 680, 8: 433
23150.00	**Lake Lotawana, MO** **Kissick, 23018-05, MO Hwy 7 & Colbern Rd**	Cody Cook, Sub to Kissick Construction Co., Inc. 816-918-4572 ccook@kissickco.com	8131 Indiana Avenue Kansas City, MO 64132	Bobby McIntyre	Brent Adams	CIPP - MO	2/19/2024	$14,550.00	100%	250	8: 250
24001.00	**Santa Roas, CA** **C02403, Llano Trunk Rehab Phase 1**	Richela Maeda, City of Santa Rosa P 707-328-1291 rmaeda@srcity.org	35 Stony Point Road, Santa Rosa, CA 95401	Pete Voelker	Todd Chalk	CIPP - CA	11/24/2025	$15,074,387.68	100%	8057	66: 8057
24003.00	**Smithville, MO** **RFP#24-05 Sanitary Sewer Reahb**	Mayra Toothman, City of Smithville 816-532-3897 mtoothman@smithvillemo.org	107 W. Main Street, Smithville, MO 64089	Bobby McIntyre	Brent Adams	CIPP - MO	3/27/2024	$149,408.00	100%	3371	8: 3371
24004.00	**Nashville, TN** **99216-C.51.01, Wallace Lane Rehab, 22SC0102**	Fadi Khayatt, Metro Nashville Davidson County Government 615-428-8594 fadi.khayatt@nashville.gov	1600 2nd Ave. North, Nashville, TN 37208	TBD	Sam Dickson	CIPP - TN	2/18/2025	$4,656,210.10	100%	30250	8: 29000, 10: 1250

SAK Construction Completed Project List

VP Job #	Project Name	Owner's Contact Information	Address	Superintendent	Project Manager	Type	Completed Date	Completed Amount	Percent Complete	Footage Complete	Diameters
24007.00	**Rolla, MO** **2024 Sewer Lining, Project No. 578**	Darin Pryor, City of Rolla, MO O:573-426-6953 C:573-247-1017 dpryor@rollacity.org	901 N. Elm St. #4. Lrolla, MO 65401	Danny Brown	Zachary Ericson	CIPP - MO	4/18/2024	$273,104.00	100%	4611	8: 4611
24008.00	**Cahokia Heights, IL** **Haier Plumbing, 1541CSR.01, 63rd & 73rd**	Jim Rossel, Haier Plumbing & Heating, Inc. 618-243-5908 JimRossel@haierplumbing.com	301 Elkton St. Okawville, IL 62271	Alan Stuhlsatz	Travis Jarrels	CIPP - IL	4/8/2024	$77,957.90	100%	572	8: 572
24011.00	**Tamarac, FL** **Project #UT23B, I&I Mainline Lining**	Jerry Robinson, Waste Water Supervisor, City of Tamarac P 954-597-3763 jerry.robinson@tamarac.org	10101 State St. Tamarac, FL 33321	Blake Kimball	Stan Krause	CIPP - FL	5/20/2024	$492,000.00	100%	11772	8: 11000, 10: 772
24012.00	**Garnett, KS** **Kissick, KDHE Fuel Leak Emergency CIPP Lining**	Contact Name, Sub to Kissick Construction Co., Inc. P Contact Phone Number Contact Email		TBD	Brent Adams	CIPP - KS	2/8/2024	$40,000.00	100%	360	8: 360
24013.00	**O'Fallon, MO** **2023 & 2024 Sewer Lining Project**	Contact Name, City of O'Fallon P Contact Phone Number Contact Email		TBD	Travis Jerrels	CIPP - MO	7/16/2024	$608,900.50	100%	18530	8: 16582, 10: 670, 12: 1278
24014.00	**Modesto, CA** **101094, DIR 515132, 2024-06 West Trunk Sewer**	Contact Name, Cityo f Modesto P Contact Phone Number Contact Email		TBD	Ryan McGraw	CIPP - CA	6/13/2025	$19,069,332.34	100%	7138	8: 320, 24: 2769, 30: 1067, 72: 2982
24016.00	**Lakeville, MN** **2024 Inflow & Infiltration, Project 24-23**	Contact Name, City of Lakeville P Contact Phone Number Contact Email		TBD	Zachary Ericson	CIPP - MN	10/11/2024	$866,269.00	100%	2519	30: 2229, 42: 290
24018.00	**Woodhaven, MI** **RJ&J, 15" CIPP on West Road**	Randy Taylor, Sub to RJ&J Enterprises, Inc. P 313.218.5201 rjjenterprisesinc@outlook.com	10229 N Dixe Hwy South Rockwood, MI 48179	Ron Gaedke	Brandon Stangle	CIPP - MI	5/31/2024	$499,641.50	100%	3533	15: 1639, 18: 1894
24023.00	**Hampton Township, MI** **Gravity Sewer Lining, USDA WW System**	Contact Name, Charter Township of Hampton P Contact Phone Number Contact Email		TBD	Dawn Young	CIPP - MI	7/31/2024	$3,372,398.69	100%	54300	8: 28700, 10: 6300, 12: 7700, 15: 2500, 18: 1600, 21: 6300, 24: 1200
24031.00	**Chandler, AZ** **B&F, WW2302.251, Price Road 66" Sewer**	Contact Name,Sub to B & F Contracting, Inc. P Contact Phone Number Contact Email		TBD	Leo Calvario	CIPP - AZ	2/28/2025	$8,014,654.45	100%	12800	66
24043.00	**Knoxville, TN** **Morgan Contracting, HPUD FY23-24 ARPA Funded**	Contact Name, Sub to Morgan Contracting, Inc. P Contact Phone Number Contact Email		TBD	Troy Melton	CIPP - TN	8/16/2024	$641,824.33	100%	9200	8: 9200
24045.00	**Keizer, OR** **Storm Drain Rehabilitation**	Contact Name, City of Keizer P Contact Phone Number Contact Email		TBD	Ryan McGraw	CIPP - OR	6/30/2024	$67,205.00	100%	521	15: 134, 10: 69, 18: 318
24047.00	**Jefferson County, AL BLD, 2023 AMP14 Hillman North**	Contact Name, Sub to BLD Services, LLC P Contact Phone Number Contact Email		TBD	Regan Roy	CIPP - AL	9/2/2024	$793,420.00	100%	18223	8: 16207, 10: 758, 12: 1258
24054.00	**Bremerton, WA** **2024 Sewer Rehabilitation**	Contact Name, City of Bremerton P Contact Phone Number Contact Email		TBD	Ryan McGraw	CIPP - WA	11/1/2024	$906,140.46	100%	7289	12: 1266, 8: 3958, 10: 191, 21: 1813, 24: 61
24056.00	**Cameron, MO** **C2223-03, Western MO Correctional Center**	Contact Name, State of Missouri, Office of Administration P Contact Phone Number Contact Email		TBD	Nick Jacobs	CIPP - MO	12/12/2024	$846,350.00	100%	950	36: 370, 42: 530, 48: 50
24058.00	**Burton, MI** **SRF WW Improvements, Segement 4, #5786-01**	Contact Name, City of Burton P Contact Phone Number Contact Email		TBD	Derrick Witz	CIPP - MI	12/16/2024	$2,197,929.59	100%	36482	8: 33119, 6: 50, 10: 2317, 15: 771, 21: 225
24068.00	**Longview, WA** **Vortex Services, Westrock Longview Emerg. Pip**	Contact Name, Sub to Vortex Services, LLC P Contact Phone Number Contact Email		TBD	Ryan McGraw	CIPP - WA	5/24/2024	$589,912.00	100%	450	60: 450
24072.00	**Manchester, MI 2024 CIPP**	Brent Jones, City of Manchester P 517.795.9712 bjones@vil-manchester.org	214 N Maconb Manchester, MI 48158	Ron Gaedke	Brandon Stangle	CIPP - MI	6/28/2024	$29,413.00	100%	439	10: 439
24076.00	**Phoenix, AZ** **Trinity Underground, 8th Place Duplex CIPP**	Contact Name, Sub to Trinity Underground, LLC P Contact Phone Number Contact Email		TBD	Victor Villalobos	CIPP - AZ	2/17/2025	$58,460.00	100%	187	8: 187
24081.00	**Madera, CA** **SS-00014, Avenue 13 Sewer Interceptor Rehab**	Ellen Bitter, City of Madera P 559.661.5472 ebitter@cityofmadera.com	205 W. Fourth St., Madera, CA 95637		Todd Chalk	CIPP - CA	2/5/2025	$12,156,751.71	100%	18024	42: 2047, 48: 15977
24085.00	**San Antonio, TX** **2023 Sewer Main, CO-00724-01; Job 23-4519**	Contact Name, San Antonio Water System P Contact Phone Number Contact Email		TBD	Roger Terrazas	CIPP - TX	3/12/2025	$2,009,915.69	100%	2427	8: 2421, 18: 6
24109.00	**St. Louis, MO McGarth, Mallinckrodt, 15" CIPP**	Contact Name, Sub to McGarth & Associates P Contact Phone Number Contact Email		TBD	Travis Jerrels	CIPP - MO	9/30/2024	$100,351.00	100%	65	15: 65
24112.00	**Belton, MO** **West Belton I&I Rehab**	Contact Name, City of Belton P Contact Phone Number Contact Email		TBD	Nick Jacobs	CIPP - MO	3/1/2025	$592,874.00	100%	8500	8: 8500
24114.00	**Silverton, OR 2024 CIPP Project**	Contact Name, City of Silverton P Contact Phone Number Contact Email		TBD	Ryan McGraw	CIPP - OR	4/15/2025	$282,341.60	100%	3590	8: 3310, 12: 280
24115.01	**St. Charles County, MO** **24-127, 2024 Storm Sewer Lining**	Contact Name, St. Charles County Highway Department P Contact Phone Number Contact Email		TBD	Travis Jerrels	CIPP - MO	4/1/2025	$312,400.00	100%	2364	12, 15, 24, 30, 40
24141.00	**Platte County, MO Sanitary Sewer Repairs - 2024**	Platte County Regional Sewer District P Contact Phone Number Contact Email		TBD	Nick Jacobs	CIPP - MO	1/24/2025	$165,400.00	100%	3145	8: 3145
24143.00	**Little Rock, AR** **4240300, Hindman Park 24" & 18" Sewer Rehab**	Contact Name, Little Rock Water Reclamation Authority P Contact Phone Number Contact Email		TBD	Brian Ackerman	CIPP - AR	4/30/2025	$1,529,863.00	100%	4440	18: 681, 24: 3671, 30: 88
24146.00	**Colfax, IN** **Wastewater Collection System Rehab**	Contact Name, Town of Colfax P Contact Phone Number Contact Email		TBD	Chris Vogt	CIPP - IN	5/8/2025	$773,321.63	100%	5005	8: 1155, 10: 740, 12: 3110
24156.01	**Alton, IL** **Plocher, ILAW Central Alton Lining, 4082.002.1**	Contact Name, Sub to Plocher Construction Company P Contact Phone Number Contact Email		TBD	Travis Jerrels	CIPP - IL	12/31/2024	$189,796.00	100%	2045	8: 2045
24156.02	**Alton, IL** **Plocher, ILAW Central Alton Lining, 4082-002.2**	Contact Name, Sub to Plocher Construction Company P Contact Phone Number Contact Email		TBD	Travis Jerrels	CIPP - IL	12/31/2024	$238,735.00	100%	2591	12: 1477, 15: 1114
24156.03	**Alton, IL** **Plocher, ILAW Central Alton Lining, 4082-002.3**	Contact Name, Sub to Plocher Construction Company P Contact Phone Number Contact Email		TBD	Travis Jerrels	CIPP - IL	12/31/2024	$705,073.00	100%	5480	8: 546, 12: 252, 18: 3674, 24: 215, 27: 793

Docusign Envelope ID: AFCB16A4-B390-89EA-8013-04580053D90F

VP Job #	Project Name	Owner's Contact Information	Address	Superintendent	Project Manager	Type	Completed Date	Completed Amount	Percent Complete	Footage Complete	Diameters
24157.01	**Godfrey, IL Kamadulski, ILAW, Group 4, Statewide 2024 CIPP**	Contact Name, Sub to Kamadulski Excavating & Grading Co., Inc. P Contact Phone Number Contact Email		TBD	Travis Jerrels	CIPP - IL	12/31/2024	$305,295.50	100%	6416	8: 6077, 10: 339
24157.02	**Godfrey, IL Kamadulski, ILAW, Group 5, Statewide 2024 CIPP**	Contact Name, Sub to Kamadulski Excavating & Grading Co., Inc. P Contact Phone Number Contact Email		TBD	Travis Jerrels	CIPP - IL	12/31/2024	$366,548.00	100%	6173	8: 498, 10: 3554, 12: 810, 15: 1311
24160.00	**Warrenton, MO 2024 CIPP Lining Project, Add-On Work**	Contact Name, City of Warrenton P Contact Phone Number Contact Email		TBD	Nick Pryor	CIPP - MO	12/31/2024	$88,368.00	100%	2000	8: 2000
24163.00	**Alton, IL Kamadulski, ILAW, 18" CIPP, Russell & 13th**	Sub to Kamadulski Excavating & Grading Co. Inc. P Contact Phone Number Contact Email		TBD	Travis Jarrels	CIPP - IL	12/31/2024	$65,683.00	100%	400	18: 400
24177.00	**Riverbank, CA Weston, DIR 94224, RB Army Ammunition Plant**	Contact Name, Sub to Weston Solutions, Inc. P Contact Phone Number Contact Email		TBD	Todd Chalk	CIPP - CA	4/30/2025	$1,622,717.75	100%	6957	12: 86, 21: 6871
24193.00	**Medord, OR 2025 Wastewater Collection and Storm Drainage System Rehabilitation, MSC-D-2502**	Contact Name, City of Medford P Contact Phone Number Contact Email		TBD	Ryan McGraw	CIPP - OR	6/27/2025	$2,094,041.70	100%	21029	6, 8, 10, 12, 15, 16, 18, 24
24203.00	**Cayce, SC Six Mile Creek Sewer, Phase I**	Contact Name, City of Cayce P Contact Phone Number Contact Email	1800 12th Street PO Box 2004 Cayce, SC 29171	TBD	Brian Ackerman	CIPP - SC	6/1/2025	$1,108,904.59	100%	2575	30: 1200, 36: 1375
25035.00	**Phoenix, AZ - JAG, 2407; Baker Farms Sewer**	JAG Construction, LLC			Victor Villalobos	CIPP - AZ	4/14/2025	$41,960.00	100%	308	8: 308
25046.00	**Phoenix, AZ - Phoenix Pipelines, Maricopa County Elections**	Phoenix Pipelines			Victor Villalobos	CIPP - AZ	6/30/2025	$40,800.00	100%	400	8: 400
25047.00	**San Lorenzo, CA - DIR#20250578585, 78" Influent RCP, Oro Lom**	Isaac Hernandez, Oro Loma Sanitary District P 510.481.6962 ihernandez@oroloma.org	3655 Grant Ave., San Lorenzo, CA 94580		Todd Chalk	CIPP - CA	11/3/2025	$2,041,127.65	100%	450	78: 450

Docusign Envelope ID: AFCB16A4-B390-89EA-8013-04580053D90F

SAK™
Pipeline Infrastructure. Solved.™

636.385.1000 tel
636.385.1100 fax
864 Hoff Road
O'Fallon, MO 63366
www.sakcon.com

January 2, 2026

To Whom It May Concern:

Joe Feuerborn, President, is hereby authorized to sign bids, extend offers, submit proposals, and execute contracts on behalf of SAK Construction, LLC.

Boyd Hirtz, Vice President, is hereby authorized to sign bids, extend offers, submit proposals, and execute contracts on behalf of SAK Construction, LLC.

Tim Bussen, Vice President, is hereby authorized to sign bids, extend offers, submit proposals, and execute contracts on behalf of SAK Construction, LLC.

Jerome P. Shaw, Jr.
Sole Manager, COO
SAK Construction, LLC

State of Missouri)

County of St. Charles)

On the 2nd day of January 2026, before me, Kathleen Ann Reed, Notary Public, personally appeared Jerome P. Shaw, Jr., who provided satisfactory evidence confirming his identity as the person whose name is subscribed to this instrument, and acknowledged that he executed the same. Witness my hand and official seal.

KATHLEEN ANN REED
Notary Public, Notary Seal
State of Missouri
Lincoln County
Commission # 20854191
My Commission Expires 08-13-2028

Kathleen Ann Reed, Notary Public

Docusign Envelope ID: AFCB16A4-B390-89EA-8013-04580053D90F

UNANIMOUS WRITTEN CONSENT
OF THE SOLE MANAGER OF
SAK CONSTRUCTION, LLC

Pursuant to Section 5.3 of the Operating Agreement of SAK Construction, LLC, a Missouri limited liability company (the "Company"), the undersigned, being the sole manager of the Company, hereby adopts the following resolutions for the Company and consents to the taking of the actions therein described, such consent to have the same force and effect as a unanimous vote of the managers of the Company at a meeting duly held on the date hereof:

RESOLVED, that the following individuals are hereby elected as officers of the Company, to hold the offices set forth opposite their respective names below for the ensuing year or until their successors are duly elected and shall have qualified, unless sooner removed by the Manager:

Thomas Kalishman	Chairman and Chief Executive Officer
Jerome P. Shaw, Jr.	Chief Operating Officer
Joe Feuerborn	President
Boyd Hirtz	Vice President
Roger Archibald	Chief Financial Officer, Secretary and Treasurer
Steve Stulce	Assistant Secretary and Assistant Treasurer

RESOLVED FURTHER, that any and all action heretofore taken, and any and all things heretofore done, by any director of the Company in connection with, or with respect to, the matters referred to in the foregoing Resolutions be and hereby are confirmed as authorized and valid acts taken on behalf of the Company.

RESOLVED FURTHER, that the foregoing resolutions shall replace and supersede any and all prior resolutions appointing officers of the Company.

Dated as of January 1, 2025

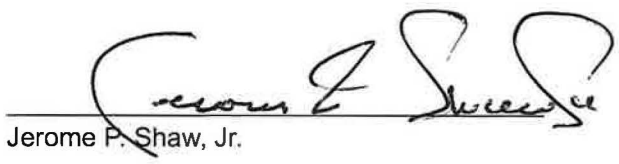

Jerome P. Shaw, Jr.

BEING THE SOLE MANAGER OF THE COMPANY

Docusign Envelope ID: AFCB16A4-B390-89EA-8013-04580053D90F

WRITTEN CONSENT
OF THE SOLE MANAGER OF
SAK CONSTRUCTION, LLC

Pursuant to Sections 347.083 of The Missouri Limited Liability Company Act and Section 5.3 of the Second Amended and Restated Operating Agreement of SAK Construction, LLC, a Missouri limited liability company (the "Company"), the undersigned, being the sole manager of the Company, hereby adopts the following resolutions for the Company and consents to the taking of the actions therein described, such consent to have the same force and effect as a unanimous vote of the managers of the Company at a meeting duly held on the date hereof:

RESOLVED, that the Manager of the Company hereby authorizes the following individual to act as an authorized representative of the Company ("***Authorized Representative***") in connection with Bid Documents, Contracts and Bonds related to SAK Construction, LLC pipe rehabilitation services, (collectively, the "***Contract***") to be executed on behalf of the Company, and such Authorized Representative is hereby authorized, directed and empowered to execute and deliver all documents required by law, and take such other action as such Authorized Representative, in his or her sole discretion, may deem necessary or advisable, in order to cause to be performed and to carry out the intent of the Contract, including execution of the Contract, with such changes or amendments thereto as may be required in the sole discretion of an Authorized Representative, as evidenced by such Authorized Representative's execution thereof.

Tim Bussen

RESOLVED FURTHER, that the Authorized Representative, be and hereby is authorized and directed to do all things and acts as may be necessary or desirable to carry out the purpose and intent of the above resolutions, and that all of the acts and doings, whether heretofore or hereafter done or performed, by the Authorized Representative or other authorized representatives, officers or employees of the Corporation in furtherance of the above resolutions are hereby in all respects ratified, approved, and confirmed.

Dated as of 12/9, 2025..

Jerome P. Shaw, Jr., Sole Manager

4893-6319-1903.1

Docusign Envelope ID: AFCB16A4-B390-89EA-8013-04580053D90F

CITY OF ST. PETE BEACH

WASTEWATER SYSTEM REHABILITATION SERVICES

ITEM	DESCRIPTION	QTY	UNIT	UNIT PRICE	AMOUNT
MANHOLE REHABILITATION					
1	Mobilization	1	EA	$ 3,050.00	$ 3,050.00
2	Flagmen (Per-Flagmen)	20	HR	$ 244.00	$ 4,880.00
3	Multi Lane, Lane Closures (FDOT Index No. 613)	10	EA/DY	$ 1,220.00	$ 12,200.00
4	Multi Lane, Intersection (FDOT Index No. 615)	10	EA/DY	$ 3,049.00	$ 30,490.00
5	Arrow Boards - 5' Minimum Horizontal Size	10	EA/DY	$ 610.00	$ 6,100.00
6	Variable Message Board	10	EA/DY	$ 1,098.00	$ 10,980.00
7	Concrete Barrier (FDOT Index No. 100)	10	EA/DY	$ 610.00	$ 6,100.00
8	Low Profile Barrier (FDOT Index No. 120)	10	EA/DY	$ 610.00	$ 6,100.00
9	Signs in Work Zones	10	EA/DY	$ 305.00	$ 3,050.00
10	6" Solid line Thermo Plastic - Permanent	200	LF	$ 6.00	$ 1,200.00
11	24" Stop Bar, Solid, Thermo Plastic, Perm.	200	LF	$ 6.00	$ 1,200.00
12	6" Skip line (6'-10' Skip) Thermo Plastic-Perm.	200	LF	$ 6.00	$ 1,200.00
13	Barricades Type III, with Warning Lights	1000	EA/DY	$ 2.00	$ 2,000.00
14	Barricades Type I or II, with Warning Lights	1000	EA/DY	$ 2.00	$ 2,000.00
15	Repair Manhole Bench and Channel	10	EA	$ 730.00	$ 7,300.00
16	Repair Chimney, Adjust/Replace MH Casting- Unpaved	10	EA	$ 3,045.00	$ 30,450.00
17	Repair Chimney, Adjust/Replace MH Casting- Asphalt Pavement	100	EA	$ 3,900.00	$ 390,000.00
18	Rebuild Corbel/Chimney for Type B Manhole Casting	10	EA	$ 2,680.00	$ 26,800.00
19	Furnish Manhole Casting - Type B	10	EA	$ 1,159.00	$ 11,590.00
20	Furnish Manhole Casting - Type E	30	EA	$ 1,340.00	$ 40,200.00
21	Severe Manhole Infiltration Elimination	10	EA	$ 1,464.00	$ 14,640.00
22	Chemical Sealing - Grout	50	GAL	$ 61.00	$ 3,050.00
23	Internal Chimney Sealant - Type B Manhole Casing	5	EA	$ 1,586.00	$ 7,930.00
24	Internal Chimney Sealant - Type E Manhole Casing	10	EA	$ 1,342.00	$ 13,420.00
25	Additional Access Cost for Manhole Coating	10	EA	$ 610.00	$ 6,100.00
26	Bypass Pumping Setup - 6-10" diameter	5	EA	$ 610.00	$ 3,050.00
27	Bypass Pumping Setup - 12" -14" diameter	20	EA	$ 610.00	$ 12,200.00
28	Bypass Pumping Setup - 15" to 21" diameter	10	EA	$ 610.00	$ 6,100.00
29	Bypass Pumping Setup - 24" diameter	5	EA	$ 610.00	$ 3,050.00
30	Bypass Pumping Operation - 6"-10" diameter	10	DAY	$ 2,440.00	$ 24,400.00
31	Bypass Pumping Operation - 12"-14" diameter	50	DAY	$ 2,680.00	$ 134,000.00
32	Bypass Pumping Operation - 15" to 21" diameter	25	DAY	$ 3,049.00	$ 76,225.00
33	Bypass Pumping Operation - 24" diameter	15	DAY	$ 3,659.00	$ 54,885.00
34	Pure Calcium Aluminate Cementitious MH Coating - 48" diameter, Initial	50	EA	$ 3,659.00	$ 182,950.00
35	Pure Calcium Aluminate Cementitious MH Coating - 60" diameter, Initial	10	EA	$ 5,122.00	$ 51,220.00
36	Pure Calcium Aluminate Cementitious MH Coating - 72" diameter, Initial	5	EA	$ 9,755.00	$ 48,775.00
37	Pure Calcium Aluminate Cementitious MH Coating - 48" diameter, Additio	250	VF	$ 559.00	$ 139,750.00
38	Pure Calcium Aluminate Cementitious MH Coating - 60" diameter, Additio	50	VF	$ 600.00	$ 30,000.00
39	Pure Calcium Aluminate Cementitious MH Coating - 72" diameter, Additio	25	VF	$ 671.00	$ 16,775.00
40	Reinforced Polymer MH Coating - 48" diameter, Initial	5	EA	$ 1,645.00	$ 8,225.00
41	Reinforced Polymer MH Coating - 60" diameter, Initial	5	EA	$ 1,775.00	$ 8,875.00
42	Reinforced Polymer MH Coating - 72" diameter, Initial	5	EA	$ 1,830.00	$ 9,150.00
43	Reinforced Polymer MH Coating - 48" diameter, Additional	25	VF	$ 550.00	$ 13,750.00
44	Reinforced Polymer MH Coating - 60" diameter, Additional	25	VF	$ 590.00	$ 14,750.00
45	Reinforced Polymer MH Coating - 72" diameter, Additional	25	VF	$ 610.00	$ 15,250.00
46	Concrete Curb Replacement - Type D	100	LF	$ 65.00	$ 6,500.00
47	Concrete Curb Replacement - Type F	100	LF	$ 73.00	$ 7,300.00

Docusign Envelope ID: AFCB16A4-B390-89EA-8013-04580053D90F

48	Concrete Curb Replacement - Miami Curb	100	LF	$ 115.00	$ 11,500.00
49	Concrete Sidewalk Replacement - 4" Thick	50	SY	$ 115.00	$ 5,750.00
50	Concrete Sidewalk Replacement - 6" Thick	50	SY	$ 115.00	$ 5,750.00
51	Concrete Driveway Replacement - 4" Thick	50	SY	$ 145.00	$ 7,250.00
52	Concrete Driveway Replacement - 6" Thick	50	SY	$ 145.00	$ 7,250.00
53	Inflow Dish	100	EA	$ 610.00	$ 61,000.00
	SUBTOTAL - MANHOLE REHABILITATION				$ 1,607,710.00
PIPE LINING					
1	Mobilization	1	EA	$ 18,615.00	$ 18,615.00
2	Flagmen (Per-Flagmen)	20	HR	$ 104.00	$ 2,080.00
3	Multi Lane, Lane Closures (FDOT Index No. 613)	10	EA/DY	$ 2,744.00	$ 27,440.00
4	Multi Lane, Intersection (FDOT Index No. 615)	10	EA/DY	$ 3,049.00	$ 30,490.00
5	Arrow Boards - 5' Minimum Horizontal Size	10	EA/DY	$ 118.00	$ 1,180.00
6	Variable Message Board	10	EA/DY	$ 118.00	$ 1,180.00
7	Concrete Barrier (FDOT Index No. 100)	10	EA/DY	$ 1,903.00	$ 19,030.00
8	Low Profile Barrier (FDOT Index No. 120)	10	EA/DY	$ 1,610.00	$ 16,100.00
9	Signs in Work Zones	10	EA/DY	$ 176.00	$ 1,760.00
10	6" Solid line Thermo Plastic - Permanent	200	LF	$ 8.00	$ 1,600.00
11	24" Stop Bar, Solid, Thermo Plastic, Perm.	200	LF	$ 8.00	$ 1,600.00
12	6" Skip line (6'-10' Skip) Thermo Plastic-Perm.	200	LF	$ 8.00	$ 1,600.00
13	Barricades Type III, with Warning Lights	1000	EA/DY	$ 74.00	$ 74,000.00
14	Barricades Type I or II, with Warning Lights	1000	EA/DY	$ 44.00	$ 44,000.00
15	CIPP Main Liner 6" Diameter - 4.5 mm thickness	1100	LF	$ 70.00	$ 77,000.00
16	CIPP Main Liner 8" Diameter - 6.0 mm thickness	72200	LF	$ 43.00	$ 3,104,600.00
17	CIPP Main Liner 10" Diameter - 6.0 mm thickness	3600	LF	$ 55.00	$ 198,000.00
18	CIPP Main Liner 12" Diameter - 6.0 mm thickness	2400	LF	$ 70.00	$ 168,000.00
19	CIPP Main Liner 15" Diameter - 7.5 mm thickness	1500	LF	$ 94.00	$ 141,000.00
20	CIPP Main Liner 18" Diameter - 9.0 mm thickness	1800	LF	$ 141.00	$ 253,800.00
21	CIPP Main Liner 21" Diameter - 9.0 mm thickness	2900	LF	$ 152.00	$ 440,800.00
22	CIPP Main Liner 24" Diameter - 10.5 mm thickness	3800	LF	$ 155.00	$ 589,000.00
23	CIPP Main Liner 6" Diameter - Thickness Variance + 1.5mm	300	LF	$ 2.50	$ 750.00
24	CIPP Main Liner 8" Diameter - Thickness Variance + 1.5mm	5000	LF	$ 3.50	$ 17,500.00
25	CIPP Main Liner 10" Diameter - Thickness Variance + 1.5mm	1000	LF	$ 3.50	$ 3,500.00
26	CIPP Main Liner 12" Diameter - Thickness Variance + 1.5mm	1000	LF	$ 3.50	$ 3,500.00
27	CIPP Main Liner 15" Diameter - Thickness Variance + 1.5mm	300	LF	$ 5.00	$ 1,500.00
28	CIPP Main Liner 18" Diameter - Thickness Variance + 1.5mm	300	LF	$ 5.00	$ 1,500.00
29	CIPP Main Liner 21" Diameter - Thickness Variance + 1.5mm	300	LF	$ 6.00	$ 1,800.00
30	CIPP Main Liner 24" Diameter - Thickness Variance + 1.5mm	300	LF	$ 7.00	$ 2,100.00
31	Bypass Pumping Setup - 6-10" diameter	5	EA	$ 1,220.00	$ 6,100.00
32	Bypass Pumping Setup - 12" -14" diameter	45	EA	$ 1,220.00	$ 54,900.00
33	Bypass Pumping Setup - 15" to 21" diameter	20	EA	$ 10,925.00	$ 218,500.00
34	Bypass Pumping Setup - 24" diameter	5	EA	$ 10,925.00	$ 54,625.00
35	Bypass Pumping Operation - 6"-10" diameter	10	DAY	$ 1,220.00	$ 12,200.00
36	Bypass Pumping Operation - 12"-14" diameter	90	DAY	$ 1,220.00	$ 109,800.00
37	Bypass Pumping Operation - 15" to 21" diameter	40	DAY	$ 4,893.00	$ 195,720.00
38	Bypass Pumping Operation - 24" diameter	10	DAY	$ 4,893.00	$ 48,930.00
39	Normal Cleaning - 6" and 8" diameter	73300	LF	$ 2.50	$ 183,250.00
40	Normal Cleaning - 10" and 12" diameter	6000	LF	$ 4.00	$ 24,000.00
41	Normal Cleaning - 15" and 18" diameter	3300	LF	$ 4.00	$ 13,200.00
42	Normal Cleaning - 21" and 24" diameter	6700	LF	$ 9.00	$ 60,300.00
43	Specialty Cleaning - 6" and 8" diameter	1000	LF	$ 6.00	$ 6,000.00

Docusign Envelope ID: AFCB16A4-B390-89EA-8013-04580053D90F

44	Specialty Cleaning - 10" and 12" diameter	100	LF	$ 6.00	$ 600.00
45	Specialty Cleaning - 15" and 18" diameter	50	LF	$ 9.00	$ 450.00
46	Specialty Cleaning - 21" and 24" diameter	100	LF	$ 15.00	$ 1,500.00
47	Chemical Sealing of Host Pipe - 10" diameter and less	30	EA	$ 610.00	$ 18,300.00
48	Chemical Sealing of Host Pipe - 12" and 15" diameter	10	EA	$ 610.00	$ 6,100.00
49	Chemical Sealing of Host Pipe - 18" to 24" diameter	5	EA	$ 793.00	$ 3,965.00
50	Chemical Sealing - Grout	100	GAL	$ 16.00	$ 1,600.00
51	Removal & Sealing of Protruding Service Connections	25	EA	$ 1,220.00	$ 30,500.00
52	Additional Access Cost Main Liner	25	EA	$ 3,781.00	$ 94,525.00
53	Service Reconnection	200	EA	$ 250.00	$ 50,000.00
54	CIPP Liner Testing	5	EA	$ 427.00	$ 2,135.00
55	Lateral Grouting	10	EA	$ 470.00	$ 4,700.00
				SUBTOTAL - PIPE LINING	$ 6,446,925.00
POINT REPAIRS					
1	Mobilization for Routine Response	20	EA		$ -
2	Mobilization for Emergency Response	6	EA		$ -
3	Flagmen (Per-Flagmen)	20	HR		$ -
4	Multi Lane, Lane Closures (FDOT Index No. 613)	5	EA/DY		$ -
5	Multi Lane, Intersection (FDOT Index No. 615)	5	EA/DY		$ -
6	Arrow Boards - 5' Minimum Horizontal Size	10	EA/DY		$ -
7	Variable Message Board	10	EA/DY		$ -
8	Concrete Barrier (FDOT Index No. 415)	10	EA/DY		$ -
9	Low Profile Barrier (FDOT Index No. 412)	10	EA/DY		$ -
10	Signs in Work Zones	10	EA/DY		$ -
11	6" Solid line Thermo Plastic - Permanent	200	LF		$ -
12	24" Stop Bar, Solid, Thermo Plastic, Perm.	200	LF		$ -
13	6" Skip line (6'-10' Skip) Thermo Plastic-Perm.	200	LF		$ -
14	Barricades Type III, with Warning Lights	1000	EA/DY		$ -
15	Barricades Type I or II, with Warning Lights	1000	EA/DY		$ -
16	As-Built Survey	5	EA		$ -
17	Excavation, Unsuitable Material	100	CY		$ -
18	Sheeting & Bracing (Left in Place)	500	SF		$ -
19	Sheeting & Bracing, Pipe Trenches (Removed)	2500	SF		$ -
20	Well Point Dewatering Initial - 6'-8' Deep	10	EA		$ -
21	Well Point Dewatering Initial - 8'-10' Deep	10	EA		$ -
22	Well Point Dewatering Initial - 10'-12' Deep	5	EA		$ -
23	Well Point Dewatering Initial - 12'-14' Deep	5	EA		$ -
24	Well Point Dewatering Initial - 14'-16' Deep	3	EA		$ -
25	Well Point Dewatering Initial - > 16' Deep	3	EA		$ -
26	Well Point Dewatering Additional - 6'-8' Deep	200	EA		$ -
27	Well Point Dewatering Additional - 8'-10' Deep	200	EA		$ -
28	Well Point Dewatering Additional - 10'-12' Deep	100	EA		$ -
29	Well Point Dewatering Additional - 12'-14' Deep	100	EA		$ -
30	Well Point Dewatering Additional - 14'-16' Deep	50	EA		$ -
31	Well Point Dewatering Additional - > 16' Deep	50	EA		$ -
32	Jack & Bore 12" x .188" Steel Casing (6" GS)	40	LF		$ -
33	Jack & Bore 16" x .219" Steel Casing (8" GS)	40	LF		$ -
34	Jack & Bore 20" x .250" Steel Casing (10" GS)	40	LF		$ -
35	Jack & Bore 24" x .281" Steel Casing (12" GS)	40	LF		$ -
36	2" Directional Drill HDPE DR 9, IPS OD	200	LF		$ -
37	4" Directional Drill HDPE DR 11, DIPS OD	300	LF		$ -

Docusign Envelope ID: AFCB16A4-B390-89EA-8013-04580053D90F

38	6" Directional Drill HDPE DR 11, DIPS OD	500	LF		$	-
39	8" Directional Drill HDPE DR 11, DIPS OD	500	LF		$	-
40	10" Directional Drill HDPE DR 11, DIPS OD	500	LF		$	-
41	12" Directional Drill HDPE DR 11, DIPS OD	300	LF		$	-
42	6" PVC Pipe, C-900 DR 18 (Gravity Sewer) 0' - 6' Depth	100	LF		$	-
43	6" PVC Pipe, C-900 DR 18 (Gravity Sewer) 6' - 8' Depth	200	LF		$	-
44	6" PVC Pipe, C-900 DR 18 (Gravity Sewer) 8' - 10' Depth	100	LF		$	-
45	6" PVC Pipe, C-900 DR 18 (Gravity Sewer) 10' - 12' Depth	50	LF		$	-
46	6" PVC Pipe, C-900 DR 18 (Gravity Sewer) 12' - 14' Depth	50	LF		$	-
47	6" PVC Pipe, C-900 DR 18 (Gravity Sewer) 14' - 16' Depth	50	LF		$	-
48	6" PVC Pipe, C-900 DR 18 (Gravity Sewer) 16' - 18' Depth	50	LF		$	-
49	8" DI Pipe, CL 350 (Gravity Sewer) 0' - 6' Depth	50	LF		$	-
50	8" DI Pipe, CL 350 (Gravity Sewer) 6' - 8' Depth	100	LF		$	-
51	8" DI Pipe, CL 350 (Gravity Sewer) 8' - 10' Depth	100	LF		$	-
52	8" DI Pipe, CL 350 (Gravity Sewer) 10' - 12' Depth	50	LF		$	-
53	8" DI Pipe, CL 350 (Gravity Sewer) 12' - 14' Depth	50	LF		$	-
54	8" DI Pipe, CL 350 (Gravity Sewer) 14' - 16' Depth	50	LF		$	-
55	8" DI Pipe, CL 350 (Gravity Sewer) 16' - 18' Depth	50	LF		$	-
56	8" PVC Pipe, C-900 DR 18 (Gravity Sewer) 0' - 6' Depth	200	LF		$	-
57	8" PVC Pipe, C-900 DR 18 (Gravity Sewer) 6' - 8' Depth	400	LF		$	-
58	8" PVC Pipe, C-900 DR 18 (Gravity Sewer) 8' - 10' Depth	400	LF		$	-
59	8" PVC Pipe, C-900 DR 18 (Gravity Sewer) 10' - 12' Depth	400	LF		$	-
60	8" PVC Pipe, C-900 DR 18 (Gravity Sewer) 12' - 14' Depth	400	LF		$	-
61	8" PVC Pipe, C-900 DR 18 (Gravity Sewer) 14' - 16' Depth	200	LF		$	-
62	8" PVC Pipe, C-900 DR 18 (Gravity Sewer) 16' - 18' Depth	200	LF		$	-
63	10" DI Pipe, CL 350 (Gravity Sewer) 0' - 6' Depth	50	LF		$	-
64	10" DI Pipe, CL 350 (Gravity Sewer) 6' - 8' Depth	100	LF		$	-
65	10" DI Pipe, CL 350 (Gravity Sewer) 8' - 10' Depth	100	LF		$	-
66	10" DI Pipe, CL 350 (Gravity Sewer) 10' - 12' Depth	50	LF		$	-
67	10" DI Pipe, CL 350 (Gravity Sewer) 12' - 14' Depth	50	LF		$	-
68	10" DI Pipe, CL 350 (Gravity Sewer) 14' - 16' Depth	50	LF		$	-
69	10" DI Pipe, CL 350 (Gravity Sewer) 16' - 18' Depth	50	LF		$	-
70	10" PVC Pipe, C-900 DR 18 (Gravity Sewer) 0' -6' Depth	100	LF		$	-
71	10" PVC Pipe, C-900 DR 18 (Gravity Sewer) 6' - 8' Depth	400	LF		$	-
72	10" PVC Pipe, C-900 DR 18 (Gravity Sewer) 8' - 10' Depth	400	LF		$	-
73	10" PVC Pipe, C-900 DR 18 (Gravity Sewer) 10' - 12' Depth	400	LF		$	-
74	10" PVC Pipe, C-900 DR 18 (Gravity Sewer) 12' - 14' Depth	400	LF		$	-
75	10" PVC Pipe, C-900 DR 18 (Gravity Sewer) 14' - 16' Depth	200	LF		$	-
76	10" PVC Pipe, C-900 DR 18 (Gravity Sewer) 16' - 18' Depth	200	LF		$	-
77	12" DI Pipe, CL 350 (Gravity Sewer) 0' - 6' Depth	50	LF		$	-
78	12" DI Pipe, CL 350 (Gravity Sewer) 6' - 8' Depth	100	LF		$	-
79	12" DI Pipe, CL 350 (Gravity Sewer) 8' - 10' Depth	100	LF		$	-
80	12" DI Pipe, CL 350 (Gravity Sewer) 10' - 12' Depth	100	LF		$	-
81	12" DI Pipe, CL 350 (Gravity Sewer) 12' - 14' Depth	100	LF		$	-
82	12" DI Pipe, CL 350 (Gravity Sewer) 14' - 16' Depth	50	LF		$	-
83	12" DI Pipe, CL 350 (Gravity Sewer) 16' - 18' Depth	50	LF		$	-
84	12" PVC Pipe, C-900 DR 18 (Gravity Sewer) 0' ' 6' Depth	100	LF		$	-
85	12" PVC Pipe, C-900 DR 18 (Gravity Sewer) 6' - 8' Depth	200	LF		$	-
86	12" PVC Pipe, C-900 DR 18 (Gravity Sewer) 8' - 10' Depth	200	LF		$	-
87	12" PVC Pipe, C-900 DR 18 (Gravity Sewer) 10' - 12' Depth	100	LF		$	-
88	12" PVC Pipe, C-900 DR 18 (Gravity Sewer) 12' - 14' Depth	100	LF		$	-

89	12" PVC Pipe, C-900 DR 18 (Gravity Sewer) 14' - 16' Depth	50	LF		$ -
90	12" PVC Pipe, C-900 DR 18 (Gravity Sewer) 16' - 18' Depth	50	LF		$ -
91	16" DI Pipe, CL 350 (Gravity Sewer) 0' - 6' Depth	200	LF		$ -
92	16" DI Pipe, CL 350 (Gravity Sewer) 6' - 8' Depth	400	LF		$ -
93	16" DI Pipe, CL 350 (Gravity Sewer) 8' - 10' Depth	400	LF		$ -
94	16" DI Pipe, CL 350 (Gravity Sewer) 10' - 12' Depth	200	LF		$ -
95	16" DI Pipe, CL 350 (Gravity Sewer) 12' - 14' Depth	200	LF		$ -
96	16" DI Pipe, CL 350 (Gravity Sewer) 14' - 16' Depth	100	LF		$ -
97	16" DI Pipe, CL 350 (Gravity Sewer) 16' - 18' Depth	100	LF		$ -
98	16" PVC Pipe, C-905 DR 18 (Gravity Sewer) 0' - 6' Depth	100	LF		$ -
99	16" PVC Pipe, C-905 DR 18 (Gravity Sewer) 6' - 8' Depth	200	LF		$ -
100	16" PVC Pipe, C-905 DR 18 (Gravity Sewer) 8' - 10' Depth	200	LF		$ -
101	16" PVC Pipe, C-905 DR 18 (Gravity Sewer) 10' - 12' Depth	100	LF		$ -
102	16" PVC Pipe, C-905 DR 18 (Gravity Sewer) 12' - 14' Depth	100	LF		$ -
103	16" PVC Pipe, C-905 DR 18 (Gravity Sewer) 14' - 16' Depth	50	LF		$ -
104	16" PVC Pipe, C-905 DR 18 (Gravity Sewer) 16' - 18' Depth	50	LF		$ -
105	18" DI Pipe, CL 350 (Gravity Sewer) 0' - 6' Depth	200	LF		$ -
106	18" DI Pipe, CL 350 (Gravity Sewer) 6' - 8' Depth	400	LF		$ -
107	18" DI Pipe, CL 350 (Gravity Sewer) 8' - 10' Depth	400	LF		$ -
108	18" DI Pipe, CL 350 (Gravity Sewer) 10' - 12' Depth	200	LF		$ -
109	18" DI Pipe, CL 350 (Gravity Sewer) 12' - 14' Depth	200	LF		$ -
110	18" DI Pipe, CL 350 (Gravity Sewer) 14' - 16' Depth	100	LF		$ -
111	18" DI Pipe, CL 350 (Gravity Sewer) 16' - 18' Depth	100	LF		$ -
112	18" PVC Pipe, C-905 DR 21 (Gravity Sewer) 0' - 6' Depth	100	LF		$ -
113	18" PVC Pipe, C-905 DR 21 (Gravity Sewer) 6' - 8' Depth	200	LF		$ -
114	18" PVC Pipe, C-905 DR 21 (Gravity Sewer) 8' - 10' Depth	200	LF		$ -
115	18" PVC Pipe, C-905 DR 21 (Gravity Sewer) 10' - 12' Depth	100	LF		$ -
116	18 PVC Pipe, C-905 DR 21 (Gravity Sewer) 12' - 14' Depth	100	LF		$ -
117	18" PVC Pipe, C-905 DR 21 (Gravity Sewer) 14' - 16' Depth	50	LF		$ -
118	18" PVC Pipe, C-905 DR 21 (Gravity Sewer) 16' - 18' Depth	50	LF		$ -
119	21" DI Pipe, CL 350 (Gravity Sewer) 0' - 6' Depth	200	LF		$ -
120	21" DI Pipe, CL 350 (Gravity Sewer) 6' - 8' Depth	400	LF		$ -
121	21" DI Pipe, CL 350 (Gravity Sewer) 8' - 10' Depth	400	LF		$ -
122	21" DI Pipe, CL 350 (Gravity Sewer) 10' - 12' Depth	200	LF		$ -
123	21" DI Pipe, CL 350 (Gravity Sewer) 12' - 14' Depth	200	LF		$ -
124	21" DI Pipe, CL 350 (Gravity Sewer) 14' - 16' Depth	100	LF		$ -
125	21" DI Pipe, CL 350 (Gravity Sewer) 16' - 18' Depth	100	LF		$ -
126	21" PVC Pipe, C-905 DR 21 (Gravity Sewer) 0' - 6' Depth	100	LF		$ -
127	21" PVC Pipe, C-905 DR 21 (Gravity Sewer) 6' - 8' Depth	200	LF		$ -
128	21" PVC Pipe, C-905 DR 21 (Gravity Sewer) 8' - 10' Depth	200	LF		$ -
129	21" PVC Pipe, C-905 DR 21 (Gravity Sewer) 10' - 12' Depth	100	LF		$ -
130	21" PVC Pipe, C-905 DR 21 (Gravity Sewer) 12' - 14' Depth	100	LF		$ -
131	21" PVC Pipe, C-905 DR 21 (Gravity Sewer) 14' - 16' Depth	50	LF		$ -
132	21" PVC Pipe, C-905 DR 21 (Gravity Sewer) 16' - 18' Depth	50	LF		$ -
133	24" DI Pipe, CL 350 (Gravity Sewer) 0' - 6' Depth	200	LF		$ -
134	24" DI Pipe, CL 350 (Gravity Sewer) 6' - 8' Depth	400	LF		$ -
135	24" DI Pipe, CL 350 (Gravity Sewer) 8' - 10' Depth	400	LF		$ -
136	24" DI Pipe, CL 350 (Gravity Sewer) 10' - 12' Depth	200	LF		$ -
137	24" DI Pipe, CL 350 (Gravity Sewer) 12' - 14' Depth	200	LF		$ -
138	24" DI Pipe, CL 350 (Gravity Sewer) 14' - 16' Depth	100	LF		$ -
139	24" DI Pipe, CL 350 (Gravity Sewer) 16' - 18' Depth	100	LF		$ -

Docusign Envelope ID: AFCB16A4-B390-89EA-8013-04580053D90F

140	24" PVC Pipe, C-905 DR 21 (Gravity Sewer) 0' - 6' Depth	100	LF		$ -
141	24" PVC Pipe, C-905 DR 21 (Gravity Sewer) 6' - 8' Depth	200	LF		$ -
142	24" PVC Pipe, C-905 DR 21 (Gravity Sewer) 8' - 10' Depth	200	LF		$ -
143	24" PVC Pipe, C-905 DR 21 (Gravity Sewer) 10' - 12' Depth	100	LF		$ -
144	24" PVC Pipe, C-905 DR 21 (Gravity Sewer) 12' - 14' Depth	100	LF		$ -
145	24" PVC Pipe, C-905 DR 21 (Gravity Sewer) 14' - 16' Depth	50	LF		$ -
146	24" PVC Pipe, C-905 DR 21 (Gravity Sewer) 16' - 18' Depth	50	LF		$ -
147	Install PVC Cleanout	10	EA		$ -
148	Replace PVC Cleanout with Manhole Structure	10	EA		$ -
149	Remove Pipe 2" or 4" (Gravity Sewer)	200	LF		$ -
150	Remove Pipe 6" or 8" (Gravity Sewer)	400	LF		$ -
151	Remove Pipe 10" or 12" (Gravity Sewer)	400	LF		$ -
152	Remove Pipe 15", 16" or 18" (Gravity Sewer)	200	LF		$ -
153	Remove Pipe 21" or 24" (Gravity Sewer)	200	LF		$ -
154	4" Pipe - Install or Adjust Service Lateral 0'-6' Deep	3	EA		$ -
155	4" Pipe - Install or Adjust Service Lateral 6'-8' Deep	3	EA		$ -
156	4" Pipe - Install or Adjust Service Lateral 8'-10' Deep	3	EA		$ -
157	4" Pipe - Install or Adjust Service Lateral 10'-12'Deep	3	EA		$ -
158	4" Pipe - Install or Adjust Service Lateral 12'-14'Deep	2	EA		$ -
159	4" Pipe - Install or Adjust Service Lateral 14'-16'Deep	2	EA		$ -
160	4" Pipe - Install or Adjust Service Lateral 16'-18' Deep	2	EA		$ -
161	6" Pipe - Install or Adjust Service Lateral 0'-6' Deep	3	EA		$ -
162	6" Pipe - Install or Adjust Service Lateral 6'-8' Deep	3	EA		$ -
163	6" Pipe - Install or Adjust Service Lateral 8'-10' Deep	3	EA		$ -
164	6" Pipe - Install or Adjust Service Lateral 10'-12' Deep	3	EA		$ -
165	6" Pipe - Install or Adjust Service Lateral 12'-14' Deep	2	EA		$ -
166	6" Pipe - Install or Adjust Service Lateral 14'-16' Deep	2	EA		$ -
167	6" Pipe - Install or Adjust Service Lateral 16'-18' Deep	2	EA		$ -
168	2" Sewer Line Manhole Connection	3	EA		$ -
169	4" Sewer Line Manhole Connection	3	EA		$ -
170	6" Sewer Line Manhole Connection	5	EA		$ -
171	8" Sewer Line Manhole Connection	5	EA		$ -
172	10" Sewer Line Manhole Connection	3	EA		$ -
173	12" Sewer Line Manhole Connection	3	EA		$ -
174	16" Sewer Line Manhole Connection	3	EA		$ -
175	18" Sewer Line Manhole Connection	2	EA		$ -
176	21” Sewer Line Manhole Connection	2	EA		$ -
177	24” Sewer Line Manhole Connection	2	EA		$ -
178	2" Inside Drop Connection	3	EA		$ -
179	4" Inside Drop Connection	3	EA		$ -
180	6" Inside Drop Connection	3	EA		$ -
181	8" Inside Drop Connection	5	EA		$ -
182	10" Inside Drop Connection	3	EA		$ -
183	12" Inside Drop Connection	3	EA		$ -
184	15"/16" Inside Drop Connection	3	EA		$ -
185	18" Inside Drop Connection	2	EA		$ -
186	21" Inside Drop Connection	3	EA		$ -
187	24" Inside Drop Connection	2	EA		$ -
188	Grouting Out of Service Pipe (Force Main)	30	CY		$ -
189	Disconnect & Plug 2" or 4" Pipe	5	EA		$ -
190	Disconnect & Plug 6" or 8" Pipe	5	EA		$ -

Docusign Envelope ID: AFCB16A4-B390-89EA-8013-04580053D90F

191	Disconnect & Plug 10" or 12" Pipe	5	EA		$	-
192	2" PVC Restrained Joint Pipe & Fittings FM, SDR 21	200	LF		$	-
193	4" PVC Pipe, C-900 DR 18 (Force Main)	500	LF		$	-
194	4" PVC Restrained Joint Pipe & Fittings FM, C-900 DR 18	100	LF		$	-
195	6" PVC Pipe, C-900 DR 18 (Force Main)	500	LF		$	-
196	6" PVC Restrained Joint Pipe & Fittings FM, C-900 DR 18	100	LF		$	-
197	8" PVC Pipe, C-900 DR 18 (Force Main)	500	LF		$	-
198	8" PVC Restrained Joint Pipe & Fittings FM, C-900 DR 18	100	LF		$	-
199	10" PVC Pipe, C-900 DR 18 (Force Main)	500	LF		$	-
200	10" PVC Restrained Joint Pipe & Fittings FM, C-900 DR 18	100	LF		$	-
201	12" PVC Pipe, C-900 DR 18 (Force Main)	300	LF		$	-
202	12" PVC Restrained Joint Pipe & Fittings FM, C-900 DR 18	100	LF		$	-
203	2" Restrained Joints	20	EA		$	-
204	4" Restrained Joints	20	EA		$	-
205	6" Restrained Joints	20	EA		$	-
206	8" Restrained Joints	20	EA		$	-
207	10" Restrained Joints	20	EA		$	-
208	12" Restrained Joints	20	EA		$	-
209	2"-4" Forcemain Pipe and Appurtenances - Over Depth Excavation	400	LF		$	-
210	6"-8" Forcemain Pipe and Appurtenances - Over Depth Excavation	500	LF		$	-
211	10"-12" Forcemain Pipe and Appurtenances - Over Depth Excavation	200	LF		$	-
212	Remove Out of Service Pipe 2" or 4" (Force Main)	500	LF		$	-
213	Remove Out of Service Pipe 6" or 8" (Force Main)	1000	LF		$	-
214	Remove Out of Service Pipe 10" or 12" (Force Main)	500	LF		$	-
215	2" Sleeved Connection	6	EA		$	-
216	4" Sleeved Connection	6	EA		$	-
217	6" Sleeved Connection	10	EA		$	-
218	8" Sleeved Connection	10	EA		$	-
219	10" Sleeved Connection	4	EA		$	-
220	12" Sleeved Connection	4	EA		$	-
221	Reverse Deadman for 2" or 4" Pipe	3	EA		$	-
222	Reverse Deadman for 6" or 8" Pipe	5	EA		$	-
223	Reverse Deadman for 10" or 12" Pipe	3	EA		$	-
224	DI Fittings FM C 153 (Compact Body)	2	TN		$	-
225	2" Air Release Assembly (In-line)	2	EA		$	-
226	2" Air Release Assembly (Offset)	2	EA		$	-
227	2" RWGV (Resilient Wedge Gate Valve) & Box	4	EA		$	-
228	4" RWGV & Box C 515	4	EA		$	-
229	6" RWGV & Box C 515	10	EA		$	-
230	8" RWGV & Box C 515	5	EA		$	-
231	10" RWGV & Box C 515	2	EA		$	-
232	12" RWGV & Box C 515	2	EA		$	-
233	Adjust Valve Box to Finished Grade (In Pavement)	5	EA		$	-
234	Adjust Valve Box to Finished Grade (Outside of Pavement)	5	EA		$	-
235	4" Line Stop	1	EA		$	-
236	6" Line Stop	1	EA		$	-
237	8" Line Stop	1	EA		$	-
238	10" Line Stop	1	EA		$	-
239	12" Line Stop	1	EA		$	-
240	4" x 2" Tapping Saddle Valve & Box	2	EA		$	-
241	4" x 4" Tapping Sleeve Valve & Box	2	EA		$	-

242	6" x 2" Tapping Saddle Valve & Box	2	EA		$	-
243	6" x 4" Tapping Sleeve Valve & Box	2	EA		$	-
244	6" x 6" Tapping Sleeve Valve & Box	2	EA		$	-
245	8" x 2" Tapping Saddle Valve & Box	2	EA		$	-
246	8" x 4" Tapping Sleeve Valve & Box	2	EA		$	-
247	8" x 6" Tapping Sleeve Valve & Box	2	EA		$	-
248	8" x 8" Tapping Sleeve Valve & Box	2	EA		$	-
249	10" x 2" Tapping Saddle Valve & Box	2	EA		$	-
250	10" x 4" Tapping Sleeve Valve & Box	2	EA		$	-
251	10" x 6" Tapping Sleeve Valve & Box	2	EA		$	-
252	10" x 8" Tapping Sleeve Valve & Box	2	EA		$	-
253	10" x 10" Tapping Sleeve Valve & Box	2	EA		$	-
254	12" x 2" Tapping Saddle Valve & Box	2	EA		$	-
255	12" x 4" Tapping Sleeve Valve & Box	2	EA		$	-
256	12" x 6" Tapping Sleeve Valve & Box	2	EA		$	-
257	12" x 8" Tapping Sleeve Valve & Box	2	EA		$	-
258	12" x 10" Tapping Sleeve Valve & Box	2	EA		$	-
259	12" x 12" Tapping Sleeve Valve & Box	2	EA		$	-
260	4' Dia. - Precast Manhole Standard	30	VF		$	-
261	4' Dia. - Precast Manhole Inside Drop	10	VF		$	-
262	4' Dia. - Precast Manhole Outside Drop	10	VF		$	-
263	5' Dia. - Precast Manhole Standard	30	VF		$	-
264	5' Dia. - Precast Manhole Inside Drop	10	VF		$	-
265	5' Dia. - Precast Manhole Outside Drop	10	VF		$	-
266	5' Dia. - Precast Air Release Manhole	10	VF		$	-
267	6' Dia. - Precast Manhole Standard	30	VF		$	-
268	6' Dia. - Precast Manhole Inside Drop	10	VF		$	-
269	6' Dia. - Precast Manhole Outside Drop	10	VF		$	-
270	Removal of Existing Manhole	3	EA		$	-
271	Remove Existing Manhole Additional	30	VF		$	-
272	Initial Excavation - 0'-6' Deep	5	EA		$	-
273	Initial Excavation - 6'-8' Deep	6	EA		$	-
274	Initial Excavation - 8'-10' Deep	6	EA		$	-
275	Initial Excavation - 10'-12' Deep	6	EA		$	-
276	Initial Excavation - 12'-14' Deep	3	EA		$	-
277	Initial Excavation - 14'-16' Deep	3	EA		$	-
278	Initial Excavation - 16'-18' Deep	2	EA		$	-
279	Initial Excavation - 18'-20' Deep	2	EA		$	-
280	Additional Excavation - 0'-6' Deep	100	LF		$	-
281	Additional Excavation - 6'-8' Deep	100	LF		$	-
282	Additional Excavation - 8'-10' Deep	100	LF		$	-
283	Additional Excavation - 10'-12' Deep	100	LF		$	-
284	Additional Excavation - 12'-14' Deep	100	LF		$	-
285	Additional Excavation - 14'-16' Deep	100	LF		$	-
286	Additional Excavation - 16'-18' Deep	50	LF		$	-
287	Additional Excavation - 18'-20' Deep	50	LF		$	-
288	Wastewater Bypass Pumping, Set up, 6" - 10" diameter	5	EA		$	-
289	Wastewater Bypass Pumping, Set up, 12" - 14" diameter	2	EA		$	-
290	Wastewater Bypass Pumping, Set up, 15" - 21" diameter	2	EA		$	-
291	Wastewater Bypass Pumping, Set up, 24" diameter	2	EA		$	-
292	Wastewater Bypass Pumping, Operation, 6" - 10" diameter	10	DAY		$	-

293	Wastewater Bypass Pumping, Operation, 12" - 14" diameter	5	DAY		$ -
294	Wastewater Bypass Pumping, Operation, 15" - 21" diameter	5	DAY		$ -
295	Wastewater Bypass Pumping, Operation, 24" diameter	2	DAY		$ -
296	6" Dia. Pipe Gravity Sewer Point Repair (DI Replacement Pipe)	2	EA		$ -
297	6" Dia. Pipe Gravity Sewer Point Repair (PVC Replacement Pipe)	5	EA		$ -
298	8" Dia. Pipe Gravity Sewer Point Repair (DI Replacement Pipe)	2	EA		$ -
299	8" Dia. Pipe Gravity Sewer Point Repair (PVC Replacement Pipe)	5	EA		$ -
300	10" Dia. Pipe Gravity Sewer Point Repair (DI Replacement Pipe)	2	EA		$ -
301	10" Dia. Pipe Gravity Sewer Point Repair (PVC Replacement Pipe)	5	EA		$ -
302	12" Dia. Pipe Gravity Sewer Point Repair (DI Replacement Pipe)	2	EA		$ -
303	12" Dia. Pipe Gravity Sewer Point Repair (PVC Replacement Pipe)	5	EA		$ -
304	15"/16" Dia. Pipe Gravity Sewer Point Repair (DI Replacement Pipe)	2	EA		$ -
305	15"/16" Dia. Pipe Gravity Sewer Point Repair (PVC Rplacement Pipe)	2	EA		$ -
306	18" Dia. Pipe Gravity Sewer Point Repair (DI Replacement Pipe)	2	EA		$ -
307	18" Dia. Pipe Gravity Sewer Point Repair (PVC Replacement Pipe)	2	EA		$ -
308	21" Dia. Pipe Gravity Sewer Point Repair (DI Replacement Pipe)	2	EA		$ -
309	21" Dia. Pipe Gravity Sewer Point Repair(PVC Replacement Pipe)	2	EA		$ -
310	24" Dia. Pipe Gravity Sewer Point Repair (DI Replacement Pipe)	2	EA		$ -
311	24" Dia. Pipe Gravity Sewer Point Repair (PVC Replacement Pipe)	2	EA		$ -
312	6" Dia. Pipe Gravity Sewer Point Repair - Additional Length (DI Replacem	20	LF		$ -
313	6" Dia. Pipe Gravity Sewer Point Repair - Additional Length (PVC Replace	50	LF		$ -
314	8" Dia. Pipe Gravity Sewer Point Repair - Additional Length (DI Replacem	20	LF		$ -
315	8" Dia. Pipe Gravity Sewer Point Repair - Additional Length (PVC Replace	100	LF		$ -
316	10" Dia. Pipe Gravity Sewer Point Repair - Additional Length (DI Replacer	20	LF		$ -
317	10" Dia. Pipe Gravity Sewer Point Repair - Additional Length (PVC Repla	100	LF		$ -
318	12" Dia. Pipe Gravity Sewer Point Repair Additional Length (DI Replacem	50	LF		$ -
319	12" Dia. Pipe Gravity Sewer Point Repair - Additional Length (PVC Repla	20	LF		$ -
320	15"/16" Dia. Pipe Gravity Sewer Point Repair - Additional Length (DI Rep	20	LF		$ -
321	15"/16" Dia. Pipe Gravity Sewer Point Repair - Additional Length (PVC R	50	LF		$ -
322	18" Dia. Pipe Gravity Sewer Point Repair - Additional Length (DI Replacer	20	LF		$ -
323	18" Dia. Pipe Gravity Sewer Point Repair - Additional Length (PVC Repla	50	LF		$ -
324	21" Dia. Pipe Gravity Sewer Point Repair - Additional Length (DI Replacer	20	LF		$ -
325	21" Dia. Pipe Gravity Sewer Point Repair - Additional Length (PVC Repla	50	LF		$ -
326	24" Dia. Pipe Gravity Sewer Point Repair - Additional Length (DI Replacer	20	LF		$ -
327	24" Dia. Pipe Gravity Sewer Point Repair - Additional Length (PVC Repla	50	LF		$ -
328	2" Dia. Pipe Forcemain Point Repair	3	EA		$ -
329	4" Dia. Pipe Forcemain Point Repair	3	EA		$ -
330	6" Dia. Pipe Forcemain Point Repair	3	EA		$ -
331	8" Dia. Pipe Forcemain Point Repair	3	EA		$ -
332	10" Dia. Pipe Forcemain Point Repair	2	EA		$ -
333	12" Dia. Pipe Forcemain Point Repair	2	EA		$ -
334	Replace Manhole Ring & Cover (Asphalt Pavement)	5	EA		$ -
335	Replace Manhole Ring & Cover (Unpaved)	5	EA		$ -
336	Manhole Bench Replacement, 4' Diameter	2	EA		$ -
337	Manhole Bench Replacement, 5' Diameter	2	EA		$ -
338	Manhole Bench Replacement, 6' Diameter	2	EA		$ -
339	Adjust Manhole Ring & Cover to Finished Grade (In Pavement)	5	EA		$ -
340	Adjust Manhole Ring & Cover to Finished Grade (Outside of Pavement)	5	EA		$ -
341	Flowable Concrete Fill	100	CY		$ -
342	Roadway Base, Lime Rock, Primed, Min. LBR 100, Variable Thickness	120	CY		$ -
343	Roadway Base, Crushed Concrete/Graded Aggregate, Min. LBR 100, Varia	120	CY		$ -

Docusign Envelope ID: AFCB16A4-B390-89EA-8013-04580053D90F

344	Superpave Asphalt Base, Type B 12.5, Variable Thickness	50	TN		$ -
345	Superpave Asphalt Concrete, Type SP 9.5, Fine, Traffic Level C, Variable	100	TN		$ -
346	Superpave Asphalt Concrete, Type SP 12.5, Fine, Traffic Level C, Variable	100	TN		$ -
347	Pavement, Cement Concrete, 6" Min Thickness (Driveways)	100	SY		$ -
348	Pavement, Cement Concrete, 8" Thick	100	SY		$ -
349	Driveway Restoration, In Kind, Decorative Block	50	SY		$ -
350	Milling Existing Asphalt Pavement, 1/2" Average Depth	150	SY		$ -
351	Milling Existing Asphalt Pavement, 3/4" Average Depth	150	SY		$ -
352	Milling Existing Asphalt Pavement, 1" Average Depth	150	SY		$ -
353	Curb & Gutter, Concrete, FDOT Type D	100	LF		$ -
354	Curb & Gutter Concrete, FDOT Type F	100	LF		$ -
355	Curb & Gutter, Concrete, Miami Curb	300	LF		$ -
356	Valley Gutter, Concrete, PCED Index 1315	100	LF		$ -
357	Sidewalk, Concrete, 4" Min. Thickness, Remove and Replace	500	SF		$ -
358	Sidewalk, Concrete, 6" Min. Thickness, Remove and Replace	500	SF		$ -
359	Sodding	4500	SF		$ -
360	Sectional Liner, 6" - 24" Pipe	50	EA		$ -
				SUBTOTAL - POINT REPAIRS	$ -
				GRAND TOTAL	$ 8,054,635.00

Bid quantities are for comparison purposes only.
This contract consists of various projects which are not yet defined and no quantities are guaranteed.

Docusign Envelope ID: AFCB16A4-B390-89EA-8013-04580053D90F

EXHIBIT "D"

Conditional Federal/Grant-Funded Contract Addendum

(Place Conditional Federal/Grant-Funded Contract Addendum behind this page)

Docusign Envelope ID: AFCB16A4-B390-89EA-8013-04580053D90F

EXHIBIT "D"
CONDITIONAL FEDERAL/GRANT-FUNDED CONTRACT ADDENDUM

1. Applicability

1.1 This Exhibit applies only if activated under Section 25 of the Agreement or under a Task Order. If not activated, this Exhibit is reserved and has no operative effect.
1.2 If activated, this Exhibit supplements the Agreement and applies to the federally funded or grant-funded Work only. Contractor shall comply with all applicable requirements of the federal award, grant agreement, pass-through entity, program rules, and applicable law.
1.3 The City may provide additional award-specific clauses, certifications, forms, wage determinations, reporting requirements, or flow-down provisions. Contractor shall comply with such requirements as a condition of performing the affected Work and receiving payment from the applicable funding source.

2. Federal Award and Grant Information

Federal/Grant Program: [insert]
Federal Awarding Agency: [insert]
Pass-Through Entity: [insert, if applicable]
Assistance Listing Number: [insert, if applicable]
Federal Award Identification Number: [insert, if applicable]
Award or Disaster Declaration Date: [insert, if applicable]
Project Number: [insert]
Special Award Conditions: [insert or attach]

3. Remedies for Breach

For contracts exceeding the simplified acquisition threshold, Contractor acknowledges that the City may exercise all administrative, contractual, legal, and equitable remedies available under the Contract Documents and applicable law if Contractor violates or breaches contract terms. Remedies may include withholding payment, requiring correction, suspension of Work, termination, procurement from alternate sources, damages, sanctions, and any other appropriate remedy.

4. Termination for Cause and Convenience

For contracts in excess of $10,000, the City may terminate the federally funded or grant-funded Work for cause or convenience as provided in the Agreement. The notice of termination will identify the effective date and the manner of termination. Contractor shall be paid only for authorized Work satisfactorily performed before the effective date of termination, subject to documentation, offsets, allowable cost requirements, and applicable grant rules.

5. Equal Employment Opportunity

Except as otherwise provided under 41 C.F.R. Part 60, if the Work is a federally assisted construction contract as defined in 41 C.F.R. § 60-1.3, Contractor shall comply with the equal opportunity clause in 41 C.F.R. § 60-1.4(b), which is incorporated by reference as if fully set forth

RESERVED

Docusign Envelope ID: AFCB16A4-B390-89EA-8013-04580053D90F

herein, and shall include the required clause in covered subcontracts and purchase orders.

6. Davis-Bacon Act and Copeland Anti-Kickback Act

When required by federal program legislation, all prime construction contracts in excess of $2,000 must include compliance with the Davis-Bacon Act, 40 U.S.C. §§ 3141-3148, as supplemented by Department of Labor regulations at 29 C.F.R. Part 5. If Davis-Bacon applies, Contractor shall pay laborers and mechanics at rates not less than the applicable wage determination, pay wages not less than once per week, submit certified payrolls if required, and comply with all applicable labor standards.
If Davis-Bacon applies, Contractor shall also comply with the Copeland "Anti-Kickback" Act, 40 U.S.C. § 3145, as supplemented by 29 C.F.R. Part 3, and shall not induce any person employed in the construction, completion, or repair of public work to give up any part of compensation to which the person is entitled. Contractor shall report suspected or reported violations to the City.

7. Contract Work Hours and Safety Standards Act

Where applicable, for contracts in excess of $100,000 that involve the employment of mechanics or laborers, Contractor shall comply with 40 U.S.C. §§ 3702 and 3704, as supplemented by Department of Labor regulations at 29 C.F.R. Part 5. Contractor shall compute wages based on a standard 40-hour workweek and shall compensate covered workers at not less than one and one-half times the basic rate of pay for hours worked in excess of 40 hours in a workweek. No laborer or mechanic shall be required to work under unsanitary, hazardous, or dangerous conditions. These requirements do not apply to purchases of supplies, materials, or articles ordinarily available on the open market, or to contracts for transportation or transmission of intelligence.

8. Rights to Inventions

If the federal award meets the definition of "funding agreement" under 37 C.F.R. § 401.2(a), and the Work involves substitution of parties, assignment, or performance of experimental, developmental, or research work under that funding agreement, Contractor shall comply with 37 C.F.R. Part 401 and any implementing regulations issued by the awarding agency.

9. Clean Air Act and Federal Water Pollution Control Act

For contracts and subgrants exceeding $150,000, Contractor shall comply with all applicable standards, orders, and regulations issued pursuant to the Clean Air Act, 42 U.S.C. §§ 7401-7671q, and the Federal Water Pollution Control Act, 33 U.S.C. §§ 1251-1387. Contractor shall report each violation to the City, and the City will report violations as required to the federal awarding agency and the appropriate EPA regional office. Contractor shall include these requirements in each covered subcontract exceeding $150,000.

10. Debarment and Suspension

Contractor shall comply with Executive Orders 12549 and 12689 and 2 C.F.R. Part 180. Contractor shall not enter into covered transactions with parties listed on the governmentwide exclusions in the System for Award Management. Contractor shall verify that Contractor, its principals, and its affiliates are not excluded or disqualified and shall include this requirement in lower-tier covered

RESERVED

Docusign Envelope ID: AFCB16A4-B390-89EA-8013-04580053D90F

transactions.

11. Byrd Anti-Lobbying Amendment

For awards exceeding $100,000, Contractor shall comply with the Byrd Anti-Lobbying Amendment, 31 U.S.C. § 1352. Contractor shall certify that it has not and will not use federal appropriated funds to pay any person or organization for influencing or attempting to influence an officer or employee of an agency, a member of Congress, an officer or employee of Congress, or an employee of a member of Congress in connection with obtaining a federal contract, grant, or other covered award. Contractor shall disclose lobbying with non-federal funds as required and shall require each lower tier to make the same certification and disclosure.

12. Procurement of Recovered Materials

Contractor shall comply with 2 C.F.R. § 200.323 and Section 6002 of the Solid Waste Disposal Act, as amended by the Resource Conservation and Recovery Act, to the extent applicable. Contractor shall procure designated items containing the highest percentage of recovered materials practicable, consistent with competition and performance requirements, when the purchase price exceeds the applicable threshold or the value of the quantity acquired during the preceding fiscal year exceeded the applicable threshold. Contractor shall also procure solid waste management services in a manner that maximizes energy and resource recovery and shall support the City's affirmative procurement program where applicable.

13. Domestic Preferences for Procurements

As appropriate and to the extent consistent with law, Contractor shall comply with 2 C.F.R. § 200.322 by providing a preference for the purchase, acquisition, or use of goods, products, or materials produced in the United States, including iron, aluminum, steel, cement, and other manufactured products, when the Work is performed under a federal award.

14. Prohibition on Certain Telecommunications and Video Surveillance Equipment or Services

Contractor shall comply with 2 C.F.R. § 200.216 and shall not obligate or expend federal funds to procure, obtain, extend, renew, or enter into a contract to procure or obtain covered telecommunications equipment or services as a substantial or essential component of any system or as critical technology as part of any system. Contractor shall include this prohibition in applicable subcontracts and purchase orders.

15. Build America, Buy America

If the Work is an infrastructure project funded by a federal financial assistance program subject to the Build America, Buy America Act, Contractor shall comply with all applicable domestic content procurement preference requirements for iron, steel, manufactured products, and construction materials permanently incorporated into the project, unless a waiver applies. Contractor shall provide certifications, documentation, and product information required by the City, funding agency, or pass-through entity.

16. Small and Minority Businesses, Women's Business Enterprises, Veteran-Owned Businesses,

RESERVED

Docusign Envelope ID: AFCB16A4-B390-89EA-8013-04580053D90F

and Labor Surplus Area Firms

Contractor shall take the affirmative steps required by 2 C.F.R. § 200.321 to assure that small businesses, minority businesses, women's business enterprises, veteran-owned businesses, and labor surplus area firms are used when possible, including, as applicable, placing such businesses on solicitation lists, soliciting them when they are potential sources, dividing requirements when economically feasible, establishing delivery schedules that encourage participation, using appropriate assistance organizations, and requiring subcontractors to take the same affirmative steps.

17. Bonding Requirements for Federal Construction or Facility Improvement Contracts

For construction or facility improvement contracts or subcontracts exceeding the simplified acquisition threshold, Contractor shall comply with the bonding requirements in 2 C.F.R. § 200.326 when the federal award requires such bonding, including bid guarantee, performance bond, and payment bond requirements unless the federal agency or pass-through entity determines that the City's bonding policy and requirements adequately protect the federal interest.

18. Access to Records; Retention

Contractor shall provide the City, the federal awarding agency, the pass-through entity, the Comptroller General of the United States, and their authorized representatives access to any documents, papers, records, and other materials that are directly pertinent to the federal or grant-funded Work for the purpose of making audits, examinations, excerpts, and transcriptions. Contractor shall retain records for the period required by 2 C.F.R. Part 200, the award terms, the Agreement, and applicable law, whichever is longer.

19. No Obligation by Federal Government

The federal government is not a party to this Agreement or any Task Order and is not subject to any obligations or liabilities to the City, Contractor, or any other party arising from the Agreement or Work.

20. Program Fraud and False or Fraudulent Statements

Contractor acknowledges that 31 U.S.C. Chapter 38 and other federal laws concerning fraud, false claims, and false statements may apply to Contractor's actions pertaining to federally funded or grant-funded Work. Contractor shall not submit false, fictitious, fraudulent, or misleading claims, certifications, invoices, records, or statements.

21. Additional Award-Specific Terms

If the federal awarding agency, pass-through entity, grant agreement, disaster assistance program, or other funding source requires additional clauses, certifications, forms, reporting, wage determinations, environmental/historic preservation conditions, civil rights provisions, procurement certifications, or other requirements, such requirements are incorporated into the affected Task Order upon written notice by the City. Contractor shall execute additional documents reasonably required by the City to document compliance.

RESERVED

CITY COMMISSION MEETING
CITY OF ST. PETE BEACH
COMMISSION CHAMBERS

Agenda Report

Agenda Title Name: Authorize the City Manager to execute the Agreement with Flotech Environmental, LLC for Wastewater System Rehabilitation Services on an as-needed basis in an amount not to exceed annually appropriated funding.

Action Request: Motion to authorize the City Manager to execute the Agreement with Flotech Environmental, LLC for Wastewater System Rehabilitation Services on an as-needed basis in an amount not to exceed annually appropriated funding.

Strategic Objective: Reliable Infrastructure

Date: June 23, 2026

Prepared By: Camden Mills, Public Services Director

Through: Frances Robustelli, City Manager

Summary of Issue: The City publicly advertised a Request for Proposals (RFP) for Wastewater System Rehabilitation Services, including manhole rehabilitation, pipe lining, and point repairs. Fifteen (15) responsive proposals were received on April 8, 2026. Following evaluation, the City's selection committee recommended award to Flotech Environmental LLC, Hinterland Group, LLC, RCM Utilities, LLC, Rowland (DE), LLC, and SAK Construction, LLC based on the following criteria:

- Qualifications and Experience
- References and Past Performance
- Capacity to Perform the Work
- Cost

The contract provides not-to-exceed unit prices for wastewater system manhole rehabilitation, cured-in-place pipe (CIPP) lining, and point repairs on an as-needed basis, allowing the City to efficiently address defects identified through routine inspections, CCTV assessments, emergency response activities, regulatory requirements, and ongoing asset management programs.

Work will be authorized by task order on an as-needed basis in an amount not to exceed annually budgeted funding. The initial contract term is three (3) years with the option for two (2) additional one (1) year renewals upon mutual agreement and annual appropriation of funds.

Approval of this agreement will provide the City with qualified contractors to perform wastewater rehabilitation services that reduce inflow and infiltration, improve system reliability, extend asset service life, and support the City's wastewater capital improvement and maintenance programs.

Funding: 401.5350.565000 Wastewater Capital Improvements (remaining balance $2,746,041.85)

401.5350.546007 – Wastewater Repairs
(remaining balance $279,990.50)

Attachments: 1. Services Agreement Flotech

CITY OF ST. PETE BEACH, FLORIDA
SERVICES AGREEMENT

Wastewater System Rehabilitation Services

This is an Agreement (the "Agreement") entered into by and between the **CITY OF ST. PETE BEACH** (hereinafter "City") and **FLOTECH ENVIRONMENTAL, LLC**. (hereinafter "Contractor"). The City and Contractor together shall be referred to as the "parties."

WHEREAS, The City properly issued a Request for Proposals, attached and incorporated hereto as Exhibit "B" and the City Commission authorized the selection of Contractor at its 06/23/2026, public hearing.

WHEREAS, City desires to purchase from Contractor the services described in this Agreement.

WHEREAS, Contractor is in the business of providing the services described herein, and has submitted an appropriate proposal to the City to provide the same.

WHEREAS, this Agreement has been properly approved by the appropriate authority of the City and the Contractor.

NOW, THEREFORE, upon the mutual covenants contained herein, and other good and valuable considerations, the sufficiency of which is hereby acknowledged, the parties hereto hereby agree to the following:

1. Recitals. The foregoing recitals are true and correct and incorporated herein by reference.

2. Standard Contract Addendum. The attached Standard Contract Addendum, which contains all the Florida Statutorily required provisions applicable to this Agreement, is attached hereto as Exhibit "A" and its provisions modify and supplement this Agreement.

3. Scope of Services. The Contractor must perform all work for the City required by the contract documents as set forth below:

a. Contractor will furnish all labor, materials, and equipment necessary as indicated in the Request for Bids (Exhibit "B") in the amount of Not To Exceed the Annual Budgeted amount. Funding will be awarded by Task Orders.

b. Contractor must supervise the workforce to ensure that all workers conduct themselves and perform their work in a safe and professional manner. Contractor must comply with all OSHA safety rules and regulations in the operation of equipment and in the performance of the work. Contractor must at all times have a competent field supervisor on the job site to enforce these policies and procedures at the Contractor's expense.

c. Contractor will provide the City with seventy-two (72) hours written notice prior to the beginning of work under this Agreement and prior to any schedule change with the exception of changes caused by inclement weather.

d. Contractor must comply with any and all Federal, State, and local laws and regulations

now in effect, or hereinafter enacted during the term of this Agreement, which are applicable to the Contractor, its employees, agents or subcontractors, if any, with respect to the work and services described herein. The Contractor further warrants that there has been no violation of copyrights or patent rights either in the United States of America or in foreign countries in connection with the work of the contract.

e. Contractor warrants to the City that all goods and materials furnished under the contract will be new unless otherwise specified and that contractor possesses good, clear, and marketable title to said goods and there are no pending liens, claims, or encumbrances whatsoever against said goods. All work not conforming to these requirements, including substitutions not properly approved and authorized may be considered defective. Contractor further warrants that all goods, materials and workmanship furnished, whether furnished by the Contractor or its subcontractors and suppliers, will comply with the specifications, drawings and other descriptions supplied or adopted. Last, Contractor warrants all material and workmanship for a minimum of (1) year from date of project completion and acceptancy by the City. If within one (1) year after acceptance by the City, or within such larger period of time as may be prescribed by law any of the work is found to be defective or not in accordance with the contract documents, the Contractor will, after receipt of a written notice from the City to do so, promptly correct the work.

4. Damages. Time is of the essence in the performance of this Agreement. City shall be entitled to liquidated damages in the amount of $500 per day, for each day after the date set forth in paragraph 10, that Contractor has failed to properly and completely deliver all goods or provide all service specified herein. The Contractor specifically acknowledges that the foregoing sum is reasonable and does not constitute a penalty.

5. Remedies.

   a. Damages. The City reserves the right to recover any ascertainable actual damages incurred as a result of the failure of the Contractor to perform in accordance with the requirements of this Agreement, or for losses sustained by the city resultant from the Contractor's failure to perform in accordance with the requirements of this Agreement.

   b. Correction of Work. If, in the judgment of the City, work provided by the Contractor does not conform to the requirements of this Agreement, or if the work exhibits poor workmanship, the city reserves the right to require that the Contractor correct all deficiencies in the work to bring the work into conformance without additional cost to the City, and/or replace any personnel who fail to perform in accordance with the requirements of this Agreement. The City is the sole judge of non-conformance and the quality of workmanship.

6. Waiver of Liens. Prior to final payment of the Contract Sum, a final waiver of lien must be submitted by all suppliers, subcontractors, and/or Contractors who worked on the project that is the subject of this Agreement.

7. Warranties.
   a. Warranty of Title. Contractor warrants to the City that all goods and materials furnished

under the contract will be new unless otherwise specified and that Contractor possesses good, clear, and marketable title to said goods and there are no pending liens, claims, or encumbrances whatsoever against said goods. All work not conforming to these requirements, including substitutions not properly approved and authorized may be considered defective.

b. Warranty of Specifications. The Contractor warrants that all goods, materials, workmanship furnished, whether by the Contractor or its subcontractors and suppliers, will comply with the specifications, drawings and other descriptions supplied or adopted.

c. Warranty of Merchantability. The Contractor warrants all material and workmanship for a minimum of one (1) year from date of project completion and acceptance by the City. If within one (1) year after acceptance by the city, or within such larger period of time as may be described by law any of the work is found to be defective or not in accordance with the contract documents, the Contractor must after receipt of a written notice from the City to do so, promptly correct the work unless the City has previously given the Contractor a written acceptance of such condition.

8. Term. This Agreement will remain in effect for a period of (3) three years with (2) two, (1) one-year extensions from the Effective Date.

9. Effective date. The "Effective Date" of this Agreement shall be the date this Agreement has been executed by all parties.

10. Termination. This Agreement may be canceled by the City when:
   a. Sufficient funds are not available to continue its full and faithful performance to the Agreement.
   b. Sub-standard or non-performance of Agreement.
   c. The City wishes to terminate the Agreement at any time and for any reason, upon giving thirty (30) days prior written notice to the Contractor.

11. Fiscal Non-funding. If funds for the requested services described herein are not appropriated via the annual budget adoption process, the City reserves the right to cancel the Agreement immediately upon written notice to the Contractor.

12. Non-Exclusivity. Contractor acknowledges that the City may enter into agreements with other consultants or may have its own employees complete the work for services similar to the services that are subject to this Agreement.

13. Compensation. Upon Contractor's satisfactory full performance of the services or in accordance with the payment schedule provided in the attached proposal, City shall pay Contractor, as full consideration for services provided in this Agreement.

14. Insurance. To the extent that this Agreement requires Contractor to provide any services of any kind, Contractor and all of Contractor's subcontractors shall maintain public liability insurance in a combined single limit for bodily injury and property damage in the amount of not less than $1,000,000.00, satisfactory to the City Manager, naming the City as an additionally named insured and providing coverage up through and including the final performance of any services provided

herein. Contractor and all of Contractor's subcontractors shall maintain in full force and effect a policy of worker's compensation insurance for all of Contractor's employees in accordance with applicable state and federal law. Said insurance coverage shall include employer's liability with a single limit of $100,000.00 per accident or occurrence. Contractor shall present City with a certificate for all the foregoing insurance, at the time of executing this Agreement and at such other times requested by the City.

The Contractor waives all rights against the City, its consultants, separate contractors, if any, and any of its subcontractors, agents and employees, for any and all damages caused to the extent covered by insurance described herein and obtained pursuant to this Section or other property insurance applicable to the services and product provided under this Agreement. The City shall require of the Contractor, Contractor's consultants, separate contractors, if any, and the subcontractors, sub-subcontractors, agents and employees of any of them, by appropriate agreements, written where legally required for validity, similar waivers each in favor of other parties enumerated herein. The policies shall provide such waiver of subrogation by endorsement otherwise. A waiver of subrogation shall be effective as to a person or entity even though that person or entity would otherwise have a duty of indemnification, contractual or otherwise, did not pay the insurance premium directly or indirectly, and whether or not the person or entity had an insurable interest in the property damaged.

15. Indemnification. In consideration of the payment of ten dollars as part of the compensation described herein, such sum being specifically found by Contractor to be sufficient consideration for this indemnification, Contractor shall indemnify, defend and hold the City harmless for itself, its past/present/future elected and appointed officials, its employees, agents and assigns, from and against any and all losses, claims, damages, suits, actions, liability or demands, including attorneys' fees and costs of litigation through all appellate proceedings, arising from the performance or non-performance of this Agreement, whether caused in part by the City or not, and in connection with violations of copyrighted or trademarked materials used by Contractor, loss of life, bodily or personal injury, or property damage, including loss of use thereof, directly or indirectly caused by, resulting from, arising out of or occurring in connection with the operations of the Contractor or its officers, employees, agents, subcontractors, or independent Contractors, excepting only such loss of life, bodily or personal injury, or property damage solely attributable to the gross negligence or willful misconduct of the City or its elected or appointed officials and employees. In any and all claims against the City, or any of their agents or employees by any employee of the Contractor any subcontractor, anyone directly or indirectly employed by any of them or anyone for whose acts any of them may be liable, the indemnification obligation under this paragraph is not limited in any way by any limitation in this amount or type of damages compensation or benefits payable by or for the Contractor or any subcontractor under Workers' Compensation Acts, Disability Benefit Acts or other Employee Benefit Acts. Nothing contained herein is intended nor may it be construed, to waive City's rights and immunities under the common law or Section 768.28, Florida Statutes, as amended from time to time; nor will anything included herein be construed as consent to be sued by any third parties in any matter arising out of this Agreement. To the extent considered necessary by the Contract Administrator and the City Attorney, any sums due Contractor under this Agreement may be retained by the City until all of the City's claims subject to this indemnification obligation have been settled or otherwise resolved, and any amount withheld is not subject to payment of interest by the City. The above provisions

will survive the termination or expiration of this Agreement and will pertain to any occurrence during the term of this Agreement, even though the claim may be made after the termination or expiration hereof.

16. Discriminatory Vendor List. Contractor hereby acknowledges its continuous duty to disclose to the City if the Contractor or any of its affiliates, as defined by Section 287.134 (1)(a), Florida Statutes, are placed on the Discriminatory Vendor List. Pursuant to Section 287-134 (2)(a), Florida Statutes: "An entity or affiliate who has been placed on the discriminatory vendor list may not submit a bid, proposal, or reply on a contract to a public entity; may not submit a bid or proposal, or reply on a contract with a public entity for the construction or repair of a public building or public work; may not submit bids, proposals, or replies on leases of real property to a public entity; may not be awarded or perform work as a contractor, supplier, subcontractor, or consultant under a contract with any public entity; and may not transact business with any public entity."

17. Independent Contractor. This Agreement does not create an employee/employer relationship between the parties. It is the intent of the parties that the Contractor is an independent contractor under this Agreement and not the City's employee for any purposes, including but not limited to, the application of the Fair Labor Standards Act minimum wage and overtime payments, Federal Insurance Contribution Act, the Social Security Act, the Federal Unemployment Tax Act, the provisions of the Internal Revenue Code, the State Worker's Compensation Act, and the State Unemployment Insurance law. The Contractor will retain sole and absolute discretion in the judgment of the manner and means of carrying out Contractor's activities and responsibilities hereunder provided, further that administrative procedures applicable to services rendered under this Agreement will be those of Contractor, which policies of Contractor will not conflict with City, State, or United States policies, rules, or regulations relating to the use of Contractor's funds provided for herein. The contractor agrees that it is a separate and independent enterprise from the City, that it had full opportunity to find other business, that it has made its own investment in it business, and that it will utilize a high level of skill necessary to perform the work. This Agreement must not be construed as creating any joint employment relationship between the Contractor and the City and the City will not be liable for any obligation incurred by Contractor, including but not limited to unpaid minimum wages and/or overtime premiums.

18. Audit Rights. The City reserves the right to audit the records of the Contractor for the commodities and/or serves provided under the contract at any time during the performance and term of the contract and for a period of five (5) years after completion and acceptance by the City. If required by the City, the Contractor agrees to submit to an audit by an independent certified public accountant selected by the City. The Contractor must allow the City to inspect, examine and review the records of the Contractor in relation to this Agreement at any an all times during normal business hours during the term of the Agreement.

19. Exhibits. The following Exhibits shall be attached, incorporated, and made a part of this Agreement:

a. Standard Contract Addendum (Exhibit "A")
b. Request for Bid/Proposal (Exhibit "B")
c. Vendor Bid/Proposal (Exhibit "C")

d. Conditional Federal/Grant-Funded Contract Addendum (Exhibit "D")

20. Notices. All notices sent pursuant to this Agreement shall be given in writing via certified mail or overnight courier and shall be delivered to the following addresses:

As to Contractor:
Flotech Environmental, LLC.
657 South Drive, Ste 401
Miami, FL 33166

As to City:
City Manager
City of St. Pete Beach
155 Corey Avenue
St. Pete Beach, FL 33706

With Copy To:
estimating@flotechllc.com

With Copy To:
attorney@stpetebeach.org

21. Conflicts and Severability. To the extent that any terms in the attached proposal conflict with the terms of this Agreement, the terms of this Agreement shall control and supersede such conflicting terms in the attached proposal, to the extent of such conflict. If any section, part of section, paragraph, clause, phrase, or word of this Agreement is declared invalid, the remaining provisions of this Agreement shall not be affected.

22. Amendments. This document and exhibits embody the entire Agreement of the parties. There are no promises, terms, conditions, or representations binding on either party hereto, other than those contained herein; and this document shall supersede all previous communications, representations, and/or agreements between the parties hereto, whether written or oral. This Agreement shall not be modified by any oral statement, communication, Agreement, course of conduct, or by anything other than a writing signed by the parties. This Agreement may be amended or modified only in writing signed by all parties hereto.

23. Jurisdiction, Venue, Attorney Fees. This Agreement shall be governed and construed according to the laws of Florida, and venue for any action arising herefrom shall be in Pinellas County, Florida. The prevailing party in any action to enforce or interpret this Agreement shall be entitled to reasonable attorney's fees incurred through all appellate proceedings.

24. Assignment. This Agreement shall be binding upon the parties, their successors, assigns, and legal representatives. Contractor shall not assign or otherwise transfer any of the rights or duties under this Agreement, without the express written consent of the City.

25. Counterparts. This Agreement may be executed and delivered in any number of counterparts, each of which so executed and delivered shall be deemed to be an original and all of which shall constitute one and the same instrument. Facsimile, documents executed, scanned and transmitted electronically and electronic signatures shall be deemed original signatures for purposes of this Agreement and all matters related thereto, with such facsimile, scanned and electronic signatures having the same legal effect as original signatures.

26. Authority. Contractor hereby acknowledges that the person executing this Agreement on behalf of Contractor has the full authority to do so and to bind Contractor to the terms hereof.

IN WITNESS WHEREOF, the Parties have executed this Agreement on the day and year set forth below.

Under penalties of perjury, and pursuant to Sec. 92.525, Fla. Stat., Contractor declares that Contractor has read the Section 15 of the Standard Contract Addendum, Exhibit "A", and that the facts stated in it are true.

Flotech Environmental, LLC.	**City of St. Pete Beach:**
Signature: _____	Signature: _____
By: Jose L. Ferre	By: Frances Robustelli
Its: Managing Member	Its: City Manager
Date: _____	Date: _____
APPROVED AS TO FORM AND LEGAL SUFFICIENCY:	ATTEST:
_____ Ralf Brookes City Attorney	_____ Renee Rose City Clerk

EXHIBIT "A"

Standard Contract Addendum

(Place Standard Contract Addendum behind this page)

CITY OF ST. PETE BEACH, FLORIDA
STANDARD CONTRACT ADDENDUM

THIS STANDARD CONTRACT ADDENDUM is made and entered into this _____ day of _____, 2026, by and between the CITY OF ST. PETE BEACH, a Florida municipality, hereinafter referred to as the "City", and _____, hereinafter referred to as "Contractor", concerning that certain agreement dated the ____ day of _____, 2026 ("Agreement") and titled _____.

WITNESSETH:

WHEREAS, Section 119.0701, Fla. Stat., requires that certain public agency contracts must include certain statutorily required provisions concerning the contractor's compliance for Florida's Public Records Act; and

WHEREAS, Section 768.28, Fla. Stat., sets forth certain mandatory limitations on indemnification and liability for Florida public agencies; and

WHEREAS, Florida law requires that public agency contracts be subject to non-appropriation and thereby contingent upon appropriation during the public agency's statutorily mandated annual budget approval process; and

WHEREAS, Section 448.095, Fla. Stat., imposes certain obligations on public agencies with regard to the use of the E-Verify system by their contractors and subcontractors; and

WHEREAS, Section 287.133 and 287.135, Fla. Stat., provides restrictions on local governments contracting with companies that are on certain Scrutinized Companies lists or convicted vendor list; and

WHEREAS, additional terms required by Sections 282.3185(5) and (6) Fla. Stat. related to data management and Section 287.05701 Fla. Stat. related to social government and corporate activism are also added by virtue of this Addendum; and

WHEREAS, Section 286.101, Florida Statutes contains a list of "foreign countries of concern" including, the People's Republic of China, the Russian Federation, the Islamic Republic of Iran, the Democratic People's Republic of Korea, the Republic of Cuba, the Venezuelan regime of Nicolás Maduro, or the Syrian Arab Republic, including any agency of or any other entity under significant control of such "foreign country of concern". Any entity that does business with a state agency or political subdivision must disclose certain of their dealings with those "foreign countries of concern" to the Florida Department of Financial Services; and

WHEREAS, Section 787.06(13), Fla. Stat. provides that when a contract is executed, renewed, or extended between a nongovernmental entity and a governmental entity, the nongovernmental entity must provide the governmental entity with an affidavit signed by an

officer or a representative of the nongovernmental entity under penalty of perjury attesting that the nongovernmental entity does not use coercion for labor or services as defined in such statute;

NOW, THEREFORE, in consideration of the covenants set forth herein, the parties agree to this addendum as follows:

1. Amendment. This Addendum hereby amends and supplements the terms of the Agreement. In the event of a conflict between the terms of the Agreement and terms of the Addendum, the terms of the Addendum shall prevail.

2. Public Records Compliance. Contractor agrees that, to the extent that it may "act on behalf" of the City within the meaning of Section 119.0701(1)(a), Florida Statutes in providing its services under this Agreement, it shall:

(a) Keep and maintain public records required by the public agency to perform the service.

(b) Upon request from the public agency's custodian of public records, provide the public agency with a copy of the requested records or allow the records to be inspected or copied within a reasonable time at a cost that does not exceed the cost provided in this chapter or as otherwise provided by law.

(c) Ensure that public records that are exempt or confidential and exempt from public records disclosure requirements are not disclosed except as authorized by law for the duration of the contract term and following completion of the contract if the contractor does not transfer the records to the public agency.

(d) Upon completion of the contract, transfer, at no cost, to the public agency all public records in possession of the contractor or keep and maintain public records required by the public agency to perform the service. If the contractor transfers all public records to the public agency upon completion of the contract, the contractor shall destroy any duplicate public records that are exempt or confidential and exempt from public records disclosure requirements. If the contractor keeps and maintains public records upon completion of the contract, the contractor shall meet all applicable requirements for retaining public records. All records stored electronically must be provided to the public agency, upon request from the City's custodian of public records, in a format that is compatible with the information technology systems of the City.

(e) Pursuant to Section 119.0701(2)(a), Fla. Stat., **IF THE CONTRACTOR HAS QUESTIONS REGARDING THE APPLICATION OF CHAPTER 119, FLORIDA STATUTES, TO THE CONTRACTOR'S DUTY TO PROVIDE PUBLIC RECORDS RELATING TO THIS AGREEMENT, CONTACT THE CUSTODIAN OF PUBLIC RECORDS AT:**

Renee Rose
City Clerk/Public Records Custodian
cityclerk@stpetebeach.org

Phone: 727-363-9220
155 Corey Avenue
St. Pete Beach, FL 33706
Fax: 727-541-8040

3. Public Records Compliance Indemnification. Contractor agrees to indemnify and hold the City harmless against any and all claims, damage awards, and causes of action arising from the contractor's failure to comply with the public records disclosure requirements of Section 119.07(1), Florida Statutes, or by contractor's failure to maintain public records that are exempt or confidential and exempt from the public records disclosure requirements, including, but not limited to, any third party claims or awards for attorneys' fees and costs arising therefrom. Contractor authorizes the public agency to seek declaratory, injunctive, or other appropriate relief against Contractor in Pinellas County Circuit Court on an expedited basis to enforce the requirements of this section.

4. Compliance/Consistency with Section 768.28, Fla. Stat. Any indemnification or agreement to defend or hold harmless by City specified in the Agreement shall not be construed as a waiver of City's sovereign immunity, and shall be limited to such indemnification and liability limits consistent with the requirements of Section 768.28, Fla. Stat. and subject to the procedural requirements set forth therein. Any other purported indemnification by City in the Agreement in derogation hereof shall be void and of no force or effect.

5. Non-appropriation. City's performance and obligation to pay under this Agreement is contingent upon an appropriation during the City's annual budget approval process. If funds are not appropriated for a fiscal year, then the Contractor shall be notified as soon as is practical by memorandum from the City Manager or designee that funds have not been appropriated for continuation of the Agreement, and the Agreement shall expire at the end of the fiscal year for which funding has been appropriated. The termination of the Agreement at fiscal year end shall be without penalty or expense to the City subject to the City paying all invoices for services rendered during the period the Agreement was funded by appropriations.

6. E-Verify Compliance. By entering into this Agreement, the Contractor is obligated to comply with the provisions of Section 448.095, Fla. Stat. "Employment Eligibility," as amended from time to time. This includes but is not limited to register with and use the E-Verify System to verify the work authorization status of all newly hired employees, and requiring all subcontractors to provide an affidavit to Contractor attesting that the subcontractor does not employ, contract with, or subcontract with, an unauthorized alien. Contractor agrees to maintain a copy of such affidavit for the duration of this Agreement. Failure to comply with this paragraph will result in the termination of this Agreement as provided in Section 448.095, Fla. Stat., as amended and Contractor will not be awarded a public contract for at least one (1) year after the date on which the Agreement was terminated. Contractor will also be liable for any additional costs to the City as a result of the termination of this Agreement in accordance with this paragraph. Contractor affirmatively states, under penalty of perjury, that in accordance with Section 448.095, Fla. Stat., Contractor is registered with and uses the E-Verify system to verify the work authorization status of all newly hired employees, that in accordance with such statute, Contractor requires from each of its subcontractors an affidavit stating that the subcontractor does not employ, contract with, or

subcontract with an unauthorized alien, and that Contractor is otherwise in compliance with Sections 448.09 and 448.095, Fla. Stat.

7. Compliance/Consistency with Scrutinized Companies Provisions of Florida Statutes. Section 287.135(2)(a), Fla. Stat., prohibits a company from bidding on, submitting a proposal for, or entering into or renewing a contract for goods or services of any amount if, at the time of contracting or renewal, the company is on the Scrutinized Companies that Boycott Israel List, created pursuant to Section 215.4725, Fla. Stat., or is engaged in a boycott of Israel. Section 287.135(2)(b), Fla. Stat., further prohibits a company from bidding on, submitting a proposal for, or entering into or renewing a contract for goods or services over one million dollars ($1,000,000) if, at the time of contracting or renewal, the company is on either the Scrutinized Companies with Activities in Sudan List or the Scrutinized Companies with Activities in the Iran Petroleum Energy Sector List, both created pursuant to section 215.473, Fla. Stat., or the company is engaged in business operations in Cuba or Syria. Contractor hereby certifies that Contractor is not listed on any of the following: (i) the Scrutinized Companies that Boycott Israel List, (ii) Scrutinized Companies with Activities in Sudan List, or (iii) the Scrutinized Companies with Activities in the Iran Petroleum Energy Sector List. Contractor further hereby certifies that Contractor is not engaged in a boycott of Israel or engaged in business operations in Cuba or Syria. Contractor understands that pursuant to section 287.135, Fla. Stat., the submission of a false certification may subject Contractor to civil penalties, attorney's fees, and/or costs. Contractor further understands that any contract with City for goods or services of any amount may be terminated at the option of City if Contractor (i) is found to have submitted a false certification, (ii) has been placed on the Scrutinized Companies that Boycott Israel List, or (iii) is engaged in a boycott of Israel. And, in addition to the foregoing, if the amount of the contract is one million dollars ($1,000,000) or more, the contract may be terminated at the option of City if the company is found to have submitted a false certification, has been placed on the Scrutinized Companies with Activities in Sudan List or the Scrutinized Companies with Activities in the Iran Petroleum Energy Sector List, or has been engaged in business operations in Cuba or Syria.

8. Disclosure Requirements for "Foreign Countries of Concern". CONTRACTOR shall comply with the disclosure requirements set forth is Section 286.101 (3) (a), Fla. Stat., which requires "Any entity that applies to a state agency or political subdivision for a grant or proposes having a contract value of $100,000 or more shall disclose to the state agency or political subdivision any current or prior interest of, any contract with, or any grant or gift received from a "foreign country of concern" if such interest, contract, grant or gift received from a "foreign country of concern" if such interest, contract, grant or gift has a value of $50,000 or more and such interest existed at any time or such contract, grant or gift was received or in force at any time during the previous five (5) years. Such disclosure shall contain the name and mailing address of the disclosing entity, the amount of the gift or the value of the interest disclosed, the applicable "foreign country of concern" and, if applicable the date of termination of the contract or interest, the date of receipt of the grant or gift and the name of the agent or controlled entity that is the source or interest holder. Within one (1) year before applying for any grant or proposing any contract, such entity must provide a copy of such disclosure to the Department of Financial Services". Pursuant to Section 286.101(7), Fla. Stat.: "In addition to any fine assessed under [section 286.101(7)(a), F.S.], a final order determining a third or subsequent violation by an entity other than a state agency or political subdivision shall automatically disqualify the entity from

eligibility for any grant or contract funded by a state agency or any political subdivision until such ineligibility is lifted by the Administration Commission for good cause."

9. Venue and Jurisdiction. Notwithstanding any of other provision to the contrary, this Agreement and the parties' actions under this Agreement shall be governed by and construed under the laws of the State of Florida, without reference to conflict of law principles. As a material condition of this Agreement, each Party hereby irrevocably and unconditionally: i) consents to submit and does submit to the jurisdiction of the Circuit Court in and for Pinellas County, Florida for any actions, suits or proceedings arising out of or relating to this Agreement. Both parties waive any right to file an action, suit or proceeding in Federal Court or remove any action, suit or proceeding to Federal Court.

10. Attorneys' Fees and Costs. Notwithstanding any of other provision to the contrary, if litigation ensues regarding this Agreement, each party hereto shall bear its own attorneys' fee and costs.

11. Public Entities Crime or Convicted Vendor List. Contractor agrees and assumes a continuous duty to disclose to the City if the Contractor or any of its affiliates as defined by Section 287.133(1)(a), Florida Statutes are placed on the Convicted Vendor List or the Antitrust Violator Vendor List maintained by the Florida Department of Management Services.

12. Data Management; Notice of Breach. Contractor shall cooperate with the City and provide timely incident reporting, response activities/fact gathering, public and agency notification, severity level assessment, after-action reports, etc., which the City must report in accordance with Sections 282.3185(5) & (6), Florida Statutes in the event of a data breach.

13. Environmental and Social Government and Corporate Activism. The City has not given preference or requested documentation from the Contractor based on Contractor's social, political or ideological interest. Contractor agrees to similarly not request documentation or give preference to any subcontractor based on the subcontractor's social, political or ideological interests.

14. Taxes. The City shall not be liable for any taxes and assessments imposed by a federal, state or local governmental agency to the extent that the City is exempt from same by Florida law, including but not limited to any sales or use tax.

15. No coercion for labor or services. The Contractor swears under penalty of perjury that the Contractor does not use coercion for labor or services as defined as follows:

"Coercion" means:

1. Using or threatening to use physical force against any person;
2. Restraining, isolating, or confining or threatening to restrain, isolate, or confine any person without lawful authority and against her or his will;
3. Using lending or other credit methods to establish a debt by any person when labor or services are pledged as a security for the debt, if the value of the labor or services as reasonably assessed is not applied toward the liquidation of the debt, the length and nature of the labor or services are not respectively limited and defined;

4. Destroying, concealing, removing, confiscating, withholding, or possessing any actual or purported passport, visa, or other immigration document, or any other actual or purported government identification document, of any person;

5. Causing or threatening to cause financial harm to any person;

6. Enticing or luring any person by fraud or deceit; or

7. Providing a controlled substance as outlined in Schedule I or Schedule II of Sec. 893.03, Fla. Stat. to any person for the purpose of exploitation of that person.

16. Force Majeure. The City reserves the right to suspend, modify or terminate this contract in the event of an act of god or act of man beyond the control of the parties, including but not limited to a hurricane, tropical storm, tornado, or other destructive weather event, flooding, pandemic, plague, war, armed conflict, domestic or foreign terrorism, riot, labor condition, state or federal governmental action, and catastrophic Internet disturbance, making performance inadvisable, economically impracticable, illegal, or impossible.

17. Additional Terms. Notwithstanding any of other provision to the contrary, the parties agree as follows:

A. None.

IN WITNESS WHEREOF, the parties hereto have executed and delivered this instrument on the days and year indicated below and the signatories below to bind the parties set forth herein.

Under penalties of perjury, and pursuant to Sec. 92.525, Fla. Stat., Contractor declares that Contractor has read the foregoing Section 15 above and that the facts stated in it are true.

Contractor:

_____

Print Name: _____

Title: _____

Company: _____

ATTEST:

_____
Renee Rose, City Clerk

City of St. Pete Beach:

_____
Frances Robustelli, City Manager

EXHIBIT "B"

Request for Bid/Proposal

(Place Request for Bid/Proposal behind this page)

City of St Pete Beach
Request for Proposal

Wastewater System Rehabilitation Services

Timeline	Date	Time
Publication of Bid	03/11/2026	8:00 AM
Pre-Bid Meeting	03/18/2026	11:00 AM
Deadline for Question Submission	03/25/2026	10:00 AM
Submittal Deadline electronically via Bonfire	04/08/2026	9:00 AM
Submittal Opening	04/08/2026	10:00 AM

Submittals are due on or before
04/08/2026 at 9:00 AM EST
Electronically Via Bonfire Only

TABLE OF CONTENTS

I. INVITATION 3
II. STATEMENT OF WORK AND TECHNICAL SPECIFICATIONS 4
III. BID FORM 5
IV. GENERAL CONTRACT TERMS 6
V. REFERENCES & MINIMUM QUALIFICATIONS 17
VI. CONTRACTOR'S PROPOSAL SUBMITTAL 18
VII. PUBLIC ENTITY CRIMINAL AFFIDAVIT 19
VIII. NON-COLLUSION AFFADAVIT 21

I. INVITATION

The City of St Pete Beach has issued this Request for Proposal (RFP) to solicit competitive bids and proposals from Proposers for Wastewater System Rehabilitation Services, including manhole rehabilitation, pipe lining and point repairs.

The proposed work will be located within the City of St. Pete Beach in Pinellas County, FL, throughout the entire wastewater collection and transmission system. Each asset to be rehabilitated and the type of rehabilitation required will be identified in each individual Work Order with the location shown on corresponding geographical exhibits.

The successful proposer shall furnish all labor, superintendence, materials, power, light, heat, fuel, water, tools, appliances, equipment, supplies, shop drawings, working drawings and other means of construction necessary or proper for performing and completing the work. The Contractor is responsible for obtaining all required permits necessary for the work, including all applications and review fees, other than those permits which may have already been obtained. The Contractor shall perform and complete the work in a speedy and efficient manner consistent with safety of life and property and to the city's satisfaction, and in strict accordance with the Contract Documents. The Contractor shall repair or restore all structures and property damaged or disturbed during performance of the work.

The types of projects include:

- **Wastewater System Manhole Rehabilitation (Manhole Project):**
  The Contractor shall furnish all labor, material, equipment, and services necessary for manhole rehabilitation. The work shall be completed at various locations through the City's wastewater service area and shall include, but is not limited to, maintenance of traffic, temporary by-pass pumping and/or diversion of wastewater, cleaning, removal and disposal of all sand, rubble, deposits, and other accumulated debris, re-building manhole bench and channels, ring (frame) and cover adjustment and replacement, pavement restoration, inflow/infiltration elimination, surface preparation, cementitious and polymer coatings installation, internal chimney sealing, manhole cover insert installation, testing, project site cleanup and restoration, and all other incidentals as required and directed by the Engineer to complete the work.
- **Wastewater System Pipe Lining (Lining Project):**
  The Contractor shall furnish all labor, material, equipment, and services necessary for wastewater pipe rehabilitation using Cured-In-Place-Pipe (CIPP) lining. The work shall be completed at various locations through the City's wastewater service area and shall include, but is not limited to, maintenance of traffic, temporary by-pass pumping and/or diversion of wastewater, cleaning, removal and disposal of all sand, rubble, deposits, and other accumulated debris, CIPP liner installation, reconnection of service laterals, testing of CIPP liners, project site cleanup and restoration, and all other incidentals as required and directed by the Engineer to complete the work.
- **Wastewater System Point Repairs (Point Repair Project):**
  The Contractor shall furnish all labor, material, equipment, and services necessary for wastewater point repairs. The work shall be completed at various locations throughout the City's wastewater service area and shall include, but is not limited to, maintenance of traffic, temporary by-pass pumping and/or diversion of wastewater, dewatering, directional drilling, jack and boring, remove unsuitable materials below trench grade, sanitary sewer gravity and force main installation, force main and gravity main connections, remove out of service gravity and force mains, install manhole connections, grout out of service pipe, install valves and associated appurtenances, project site cleanup and restoration, and all other incidentals as required and directed by the Engineer to complete the work.

CONTACT INFORMATION
Procurement Manager – Sara Spain
Email – purchasing@stpetebeach.org

II. STATEMENT OF WORK AND TECHNICAL SPECIFICATIONS

See attached Technical Specifications Word document.

III. BID FORM

See attached Bid Form Excel document.

IV. GENERAL CONTRACT TERMS

REQUEST FOR PROPOSALS
Wastewater System Rehabilitation Services

REQUEST FOR PROPOSAL SUMMARY
The City of St Pete Beach has issued this Request for Proposal (RFP) to solicit competitive bids and proposals from Proposers for Wastewater System Rehabilitation Services, including manhole rehabilitation, pipe lining and point repairs.

The successful bidder shall provide all labor, materials, equipment, tools, consumables, transportation, and incidentals to provide Public Services capital improvement projects construction services on an 'as needed' basis for the City of St Pete Beach.

The "City" intends to **award multiple contracts** to vendors who can provide the best value for services. Vendors may submit proposals for all, some, or only one of the categories. **It is not mandatory to submit a proposal for every item listed**. A bidder may bid on any, all, or none of the items. The "City" reserves the right to select multiple vendors to optimize cost-efficiency and capability across different segments of the project. Proposals will be evaluated based on capability, cost, and capacity to perform the specific line items requested.

PROPOSAL SUBMITTALS
Proposal documents must include a signed/notarized Contractor's Proposal Submittal, Bid Form, References, Contractor's license and insurance certificates, and Public Entity Criminal Affidavit. The Contractor shall submit electronic proposals only. Bidders must submit electronically only through Bonfire platform. When bidding electronically, only one copy should be submitted.

Proposals shall include the following:

- A signed and notarized Proposer's Contract Proposal.
- Current proof of insurance certificate.
- A list of references and minimum qualifications as outlined in Section V.
- One copy of bid electronically submitted to Bonfire platform.

The City is not responsible for any Addendums or other supplementary information that is not received due to non-submittal of the aforementioned information. Please refer back to the city website (http://www.stpetebeach.org/news-and-links/city-projects.html) for additional project information as it becomes available. The City reserves the right to decide whether to answer addendums or not. The City is not required to provide any additional information.

Proposers or persons wishing to submit a proposal on this project shall be licensed, and insured in accordance with the City's requirements

The City of St. Pete Beach reserves the right to reject any or all proposals or parts of proposals, or accept any proposal or part thereof deemed to be in the best interests to the City of St. Pete Beach.

Electronic proposals must be submitted by **9:00 AM on April 08, 2026 (Deadline),** clearly marked as: **"Wastewater System Rehabilitation Services."**

PRE-PROPOSAL MEETING
An optional pre-proposal meeting will be held on **March 18, 2026 at 11:00 AM EST** via Microsoft Teams conference/Teleconference. Please contact the City's Procurement Manager (purchasing@stpetebeach.org) for a meeting invitation and instructions.

WRITTEN REQUESTS FOR INTERPRETATIONS/CLARIFICATIONS
No oral interpretations will be made to any firms as to the meaning of the scope of work or any other contract documents included in this **RFP.** All questions pertaining to the terms and conditions or scope of work of this Request for Proposal **(RFP)** must be sent in writing via email only to the City Procurement Manager (purchasing@stpetebeach.org) and shall be received no later than **10:00 AM EST on March 25, 2026.** Responses to questions may be handled as an Addendum if the response would provide clarification to the requirements of the **RFP**. All such Addenda shall become a part of the contract documents. The City will not be responsible for any other explanation or interpretation of the proposed **RFP** made or given prior to the award of the contract. The City will not respond to questions received after the specified deadline. The City reserves the right to respond to any and all questions but is not required to do so. If the Proposer discovered the opportunity through the online platform (Bonfire), do not submit questions through these platforms. **Only questions emailed directly to the City Procurement Manager will be answered.**

BEGINNING DATE
The Proposer shall, within ten (10) business days after receipt of the Notice of Award and before commencement of any operations hereunder, execute the Agreement. Additionally, the Proposer shall, within twenty (20) business days after receipt of the Notice of Award, provide all required documentation to the City.

COMPLETION OF WORK
The work will be completed on an as-needed basis. Each location that needs to be surveyed, repaired and/or worked on will constitute it's own "job". This will be a three (3) year initial contract with the option to be extended for two (2) additional one (1) year periods upon mutual consent of both parties. It is the intent of the City of St Pete Beach to award these services to more than one Contractor/Vendor.

COSTS INCURRED BY PROPOSERS
All expenses involved with the preparation and submission of proposals to the City, or any work performed in connection therewith, shall be borne solely by the Proposers. No payment will be made for any responses received or for any other effort required of or made by; the Proposer's prior to contract commencement.

ORAL PRESENTATION
The City may require an oral presentation of the proposal at the Evaluation Committee's discretion. This could also include a formal interview of any and all members of the Proposer's contract management staff.

CONFLICT OF INTEREST
The Proposer represents that it presently has no interest and shall acquire no interest, either direct or indirect, which would conflict in any manner with the performance or services required hereunder, as provided for in FL Stat. 112.311. The Proposer further represents that no person having any interest shall be employed for said performance.

The Proposer shall promptly notify the City's representative, in writing, by certified mail, of all potential conflicts of interest for any prospective business association, interest, or other circumstance, which may influence or appear to influence the contractor's judgment or quality of services being provided hereunder. Such written notification shall identify the prospective business association, interest or circumstance, the nature of work that the Proposer may undertake and request an opinion of the city as to whether the association, interest or circumstance would, in the opinion of the City, constitute a conflict of interest if entered into by the Proposer. The City agrees to notify the Proposer of its opinion by certified mail within thirty days of receipt of notification by the Proposer.

LATE PROPOSAL OR MODIFICATIONS
Modifications in writing received prior to the time set for the proposal submittal will be accepted. Proposal modifications received after the time set for the proposal submittal will not be considered.

RELATED PARTIES AND MULTIPLE PROPOSALS
Where two (2) or more related parties each submit a proposal or multiple proposals are received from (1) Proposer, for any such contract, such proposals shall be judged non-responsive. Related parties mean Proposers or the principles thereof, which have a direct or indirect ownership interest in another Proposer for the same contract or in which a parent company or the principles thereof where one (1) Proposer has a direct ownership interest in another Proposer for the same contract.

RIGHT TO AUDIT
The City of St. Pete Beach reserves the privilege of auditing a Proposer's record as such records relate to purchases or work between the City and said Proposer. Records should be maintained for three years from contract date.

VARIANCE FROM STANDARD TERMS & CONDITIONS
All standard terms and conditions stated throughout the RFP apply to this contract except as specifically stated. This should be fully understood by Proposers prior to submitting a proposal.

ASSIGNMENT
The Proposer shall perform this contract. No assignment or subcontracting shall be allowed without prior written consent of the City. If a Proposer intends to subcontract a portion of this work, the Proposer must disclose that intent in the proposal. In the event of a corporate acquisition and/or merger, the Contractor shall provide written notice to the City within thirty (30) business days of Proposer's notice of such action or upon the occurrence of said action, whichever occurs first. The right to terminate this contract, which shall not be unreasonably exercised by the City shall include but not be limited to, instances in which a corporate acquisition and/or merger represent a conflict of interest or are contrary to any local, state, or federal laws. Action by the City awarding a proposal to a firm that has disclosed its intent to assign or subcontract in its response to the RFP, without exception shall constitute approval for purpose of this Agreement.

LOBBYING Lobbying of Evaluation Committee members, City employees, or elected officials regarding request for proposals, request for qualifications, bids or contracts, during the pendency of bid award or bid protest, by the bidder/proposer/protestor or any member of the bidder's/proposer's/protestor's staff, an agent of the bidder/proposer/protestor, or any person employed by any legal entity affiliated with representing an organization that is responding to the request for proposal, request for qualification, bid or contract, or has a pending bid protest is strictly prohibited either upon advertisement or on a date established by the City and shall be prohibited until either an award is final or the protest is finally resolved by the City Manager or Procurement Manager; provided, however, nothing herein shall prohibit a prospective bidder/proposer from contacting City departments to address situations such as clarification and/or questions related to the procurement process. For purposes of this provision, lobbying activities shall include but not be limited to, influencing or attempting to influence action or non-action in connection with any requests for proposal, request for qualification, bid or contract through direct or indirect oral or written communication or an attempt to obtain goodwill of persons and/or entities specified in this provision. Such actions may cause any request for proposal, request for qualification, bid or contract to be rejected.

ADDITIONAL REQUIREMENTS
The City reserves the right, by change order, to unilaterally add or delete locations/services, either collectively or individually, at the City's sole option, at any time after award has been made as may be deemed necessary or in the best interest of the City. In such case, the Proposer will be required to provide or reduce services to this contract in accordance with the terms, conditions, and specifications.

SERVICES AGREEMENT
A written agreement incorporating the RFP and the successful proposal will be prepared by the City, signed by the successful Proposer, and presented to the City Commission for approval and signature.

INTEGRITY OF REQUEST FOR PROPOSAL DOCUMENTS
Proposers shall use the original RFP forms provided within the RFP and enter information in the spaces where a response is requested. Proposers may use an attachment as an addendum to the RFP forms if sufficient space is not available on the original form for the Proposer to enter a complete response. Any modifications or alterations to the original RFP documents by the Proposer, whether intentional or otherwise, will constitute grounds for rejection of the RFP. Any such modifications or alterations a Proposer wishes to propose must clearly be stated in the Proposer's RFP response and presented in the form of an addendum to the original RFP documents.

RESPONSIBILITY OF THE CITY MANAGER OR DESIGNEE
The term "City Manager or designee" wherever used in this Contract shall be the City of St. Pete Beach or its duly authorized representative. Notices of any change in the City Manager or designee shall be given in writing by the City to the Contractor. The City Manager or designee shall have full authority to interpret the contract and requirements and shall determine acceptance of the work under this Contract and every question relative to the fulfillment of the terms and provisions therein. It shall be the duty of the City Manager or designee to enforce the contract terms in a fair and unbiased manner.
If a variation from any requirements is allowed, the City Manager or designee shall grant the same in writing with the reasons for his action outlined, and such action will not invalidate or change the Contract in any other manner.

EXAMINATION OF SITE
Proposer shall carefully examine project site and be familiar with the work required for the project, investigate all site conditions that may affect execution of work as detailed in the construction documents. Contact the City's Procurement Manager or their designee for changes or alterations before proceeding.

ASSURANCES
The responding Proposer shall provide a statement of assurance that the Proposer is not presently in violation of any statutes or regulatory rules that might have an impact on the firm's operations. All applicable laws and regulations of the State of Florida, and ordinances and regulations of the City of St. Pete Beach will apply.

ASSIGNMENT AND TRANSFER OF CONTRACT
The Proposer shall not assign or transfer this Agreement or any part thereof or any interest therein without consent in writing of the City and the Proposer's Surety, and any such assignment or transfer without such written consent shall be null and void.

SUBCONTRACTS
The Proposer shall not subcontract this Agreement or any part thereof or any interest therein without consent in writing of the City and the Proposer's Surety. Any Subcontractor approved by the City will be subject to the same standards and qualifications as stated in this Contract.

PAYMENT
Payment shall be made to the Proposer for work performed under this Contract for the quantities of work as determined in accordance with Payments for Work Completed and Payments Withheld of this Contract. Payment for extra work will be made in accordance with the Changes in Work, Contract Amount, and Contract Time sections below.

PERIOD OF PERFORMANCE
The target completion for the base Scope of Services is January 2027, corresponding to delivery of the Design-Build Readiness Package. The City reserves the right, at its sole discretion and subject to funding

availability, to amend this Agreement to extend the Consultant's services through final (100%) design. Any additional services shall be authorized by written amendment and negotiated in accordance with the Consultants' Competitive Negotiation Act (Section 287.055, Florida Statutes).

CHANGES IN THE WORK

Without invalidating the Contract, the City may, at any time or from time to time, order additions, deletions or revisions in the work authorized by written Change Orders or directives. Upon receipt of a Change Order, the Proposer will proceed with the work involved. All such work shall be executed under the applicable conditions of the Contract documents. If any Change Order causes an increase or decrease in the Contract Amount or any extension or shortening of the Contract Time, an equitable adjustment will be made.

Additional Work performed by the Proposer without authorization of a Change Order will not entitle them to an increase in the Contract Amount or any extension of the Contract Time, except in the case of an emergency (subject to approval by City Manager or designee).

It is the Proposer's responsibility to notify their Surety of any changes affecting the general scope of the Work or change of the Contract Amount and the amount of the applicable bonds shall be adjusted accordingly, and an amended bond document furnished to the City. In the event the City directs the Proposer to make a change in the Work, and if the City and the Proposer do not arrive at a mutually acceptable increase or decrease in the Contract Amount, the Proposer shall not use any such lack of mutual acceptance as a basis or cause to stop or otherwise delay the progress or the execution and completion of any of the work ordered, directed or required pursuant to the Contract Documents.

If the Proposer believes an event or situation has occurred which justifies a change in the Contract Amount or Contract Time, they shall deliver a written notice to the City Manager or designee. Each such written notice shall be delivered promptly and no later than fifteen (15) business days after the Proposer first discovered the occurrence. The Proposer shall be deemed to have waived the right to collect any and all costs incurred more than fifteen (15) business days prior to the date of delivery of the written notice and shall be deemed to have waived the right to seek an extension of the Contract Time with respect to any delay in the Progress Schedule which accrued more than fifteen (15) business days prior to the date of delivery of the written notice.

Any such notice shall include sufficient detail to explain the basis of entitlement to a claim for an adjustment to the Contract Amount of Contract Time. When requested by the City Manager or designee, the Proposer shall furnish any additional information and details as may be required to determine the facts or allegations involved, which shall be provided within fifteen (15) business days of the request unless a longer time period is allowed by the City Manager or designee.

The Proposer shall prepare proposals detailing proposed adjustments to Contract Amount and/or Contract Time and submit them to the City Manager or designee within fifteen (15) business days of the City's issuance of a proposed Change Order or the Proposer's submitting a written notice of a change or claim for an adjustment to the Contract Amount or Contract Time. Proposer's proposals shall be irrevocable for a period of at least sixty (60) business days after receipt by the City. Any delay in the submittal of a complete, adequate and acceptable proposal will not justify an increase in Contract Amount or Contract Time. Proposer agrees that it shall give the City access to any and all of Proposer's and Subcontractors' books, records and other materials relating to proposed Change Orders and other claims for adjustment to Contract Amount or Contract Time.

CHANGE OF CONTRACT AMOUNT

The Contract Amount constitutes the total compensation payable to the Proposer for performing the Work. All duties, responsibilities and obligations assigned to or undertaken by the Proposer shall be at his expense

without change in the Contract Amount. The Contract Amount may only be changed by written Change Order issued by the City. Any claim for an increase in the Contract Amount shall be in writing and delivered to the City Manager or designee within fifteen (15) business days of the occurrence of the event giving rise to the claim.

All claims for adjustment in the Contract Amount shall be determined by the City Manager or designee. However, no claim for an adjustment to the Contract Amount will be considered for unforeseeable causes that were beyond the fault or negligence of the Proposer or his Subcontractors or supplier such as acts of God, floods, riots, etc. This restriction does not restrict submission of claims for additional Contract Time due to events of this nature. Any change in the Contract Amount shall be incorporated in a Change Order.

Proposer proposals or claims shall cover all aspects of the Work involved and shall be fully documented and itemized as to all costs, quantities and charges for overhead and profit. Amounts for Subcontractors or Suppliers at any tier shall be similarly supported. When determining Subcontractors' costs, the methods to be used shall be those used for the Proposer's costs, except that the term "Subcontractor" shall replace the term "Proposer," context permitting.

The value of any Work covered by a Change Order or of any claim for an increase or decrease in the Contract Amount where the Work involved is covered by unit prices contained in the Contract Documents shall be determined by application of unit prices to the quantities of the items involved. If the quantities originally contemplated are so changed in a proposed Change Order, that application of the Unit Prices to the quantities proposed will cause substantial inequity to the City or the Proposer, the applicable unit price(s) shall be equitably adjusted by mutual agreement.

If the value of work covered by a Change Order cannot be established or mutually agreed to utilizing previously established unit rates, the value shall be determined by the City on the basis of an estimate of the out-of-pocket cost and percentages that are acceptable to the City for overhead and profit.

In such case, the Proposer will submit in the form prescribed by the City an itemized cost breakdown together with supporting data.

The amount of credit to be allowed by the Proposer to the City for any such change which results in a net decrease in cost, will be the amount of the actual net decrease as determined by the City. When both additions and credits are involved in any one change, the combined overhead and profit shall be figured on the basis of the net increase, if any.

CHANGE OF CONTRACT TIME

The Contract Time may only be changed by written Change Order. Any claim for an extension in the Contract Time shall be in writing and include an analysis of the Progress Schedule as further described in the Specifications and shall be delivered to the City Manager or designee within fifteen (15) business days of the occurrence of the event giving rise to the claim. All claims for adjustment in the Contract Time shall be determined by the City Manager or designee. Any change in the Contract Time resulting from any such claim shall be incorporated in a Change Order. The Contract Time may be extended for an amount equal to time lost due to unforeseeable causes beyond the control of the Proposer (and his Subcontractors and Suppliers) if he makes a claim therefrom. Such delays shall include, but not be restricted to, acts or neglect by any separate Proposer employed by the City; fires; floods; labor disputes; epidemics; or acts of God.

All time limits stated in the Contract Documents are of the essence to the Contract. The stated time limits are agreed to be adequate to complete the work, including the procurement, manufacture and delivery of all material and equipment required, and account for any and all potential impact, delays, disruptions and costs that may be expected.

PAYMENTS FOR WORK COMPLETED
All payments under this agreement shall comply with the requirements of Florida Statutes, Section 215.422, commonly referred to as the "Prompt Payment Law." This includes timely processing of invoices and adherence to statutory interest provisions for late payments. The Contractor shall submit detailed invoices for services rendered under this agreement. Each invoice must include: Purchase Order or Contract Number, Description of services provided, Dates of service, Total amount due. Payment will be made within 45 days of receipt of a proper invoice and acceptance of deliverables, as required by Florida law. If payment is not made within the statutory timeframe, interest penalties will apply in accordance with Section 215.422, Florida Statutes. Payments will be issued via electronic funds transfer (EFT) unless otherwise agreed in writing. Contractor must provide accurate banking information to facilitate EFT.

PAYMENTS WITHHELD
The City Manager or designee may withhold, or, on account of subsequently discovered evidence, nullify the whole or part of any estimate to such extent as may be necessary to protect the City from loss on account of:

a) Defective work not remedied

b) Claims and/or liens filed or reasonable evidence indicating probable filing of claims

c) Failure of the Proposer to make payments properly to Subcontractors or for labor

d) A reasonable doubt that the Contract can be completed for the balance then unpaid

e) Damage to another Proposer

f) Failure of the Proposer to keep their work progressing in accordance with their time schedule

FINAL PAYMENTS
Upon the completion and acceptance of the work, the City Manager or designee shall issue a certificate that designates that the whole work provided for in this Contract has been completed and accepted by him under the conditions and the terms thereof and shall make the final estimate of the work. After issuance of the certificate, the entire balance found to be due the Proposer, including said retained percentage by the City in accordance with existing state laws as may be retained lawfully by said City, shall pay excepting such sums to the Proposer.

Before the approval of the final payment, the Proposer shall submit evidence satisfactory to the City that states that all payrolls, materials, bills and outstanding indebtedness in connection with this Contract have been paid.

LIENS
If at any time there shall be evidence of any lien or claim for which the City might become liable and which is chargeable to the Proposer, the City shall have the right to retain out of any payment then due or thereafter to become due, an amount sufficient for complete indemnification against such lien or claim. In the event the City has already paid to the Proposer all sums due under this contract or the balance remaining unpaid is insufficient to protect the City, the Proposer and his Surety shall be liable to the City for any loss so sustained.

RESPONSIBILITY OF THE CITY MANAGER OR DESIGNEE
The term "City Manager or designee" wherever used in the Contract shall be the City of St. Pete Beach or its duly authorized representative. Notices of any change in the City Manager or designee shall be given in writing by the City to the Proposer. The City Manager or designee shall have full authority to interpret the Plans and Specifications and shall determine the amount, quality, and acceptance of the work and supplies

to be paid for under the Contract and every question relative to the fulfillment of the terms and provisions therein. It shall be the duty of the City Manager or designee to enforce the Plans and Specifications in a fair and unbiased manner. If a variation from any requirements is allowed the City Manager or designee shall grant the same in writing with the reasons for his action outlined, and such action will not invalidate or change the Contract in any other manner.

LICENSES AND PERMITS

The Proposer shall obtain and pay for all necessary City licenses and work permits and shall faithfully comply with all laws, ordinances and regulations, (Federal, State or local) which may be applicable to the operations to be conducted hereunder, except for those permits obtained by the City. Notwithstanding the provisions above, the Proposer is responsible for non-compliance of all permit requirements, including all fines resulting from Proposer's non-compliance of said requirements.

Chapter II, Section II-4, "Registration of Licenses Obtained From Other Municipalities:" "Persons, partnerships, corporations, or other business entities doing business with the City who are not required to obtain a City occupational license, but who must have either a State or County or Municipal occupational license from another municipality, shall register such occupational license with St. Pete Beach Community Development Department. The City may charge a fee for such registration." The Proposer shall be responsible for obtaining all City, County, State and Federal permits required by those government agencies and must provide documentation of receipt of those permits prior to project commencement. This shall include a notice to commence work letter and the applicable fee, if required. Any sub-contractor hired by the Proposer awarded the project, MUST also register their license with the City.

LABOR PROVISIONS

The Proposer and his Subcontractors shall discharge, whenever ordered to do so by the City Manager or designee, any employee who is disorderly or whose conduct in the opinion of the City Manager or designee is detrimental to the prosecution of the work. No person whose age or physical condition is such as to make this employment dangerous to his/her health and safety or to the health and safety of others shall be employed on the work, and in no event shall any persons under the age of sixteen (16) years be employed. The State of Florida prevailing wage law requires that the Proposer shall fully comply with all provisions contained in Section 215.19, "Schedule of Prevailing Wage Rates for Specified Public Construction." The wage rates set forth by such determination shall apply to this project.

INSURANCE

The Proposer shall procure and maintain at his/her own expense, during the life of the Contract, liability insurance as hereinafter specified. All such insurance shall be subject to the approval of the City for adequacy of protection and shall include a provision preventing cancellation without twenty (20) business days prior notice to the City in writing. The City shall be included as an additional insured on all liability insurance. The liability insurance required is as follows: Proposer's General Public Liability and Property Damage Insurance issued to the Proposer and protecting the Proposer from all claims for personal injury, including death, and all claims for destruction of or damage to property, arising out of or in connection with any operations under this Contract, whether such operations be by the Proposer or by any Subcontractor hired by the Proposer or anyone directly or indirectly employed by the Proposer or hired by the Proposer.

The successful Proposer shall supply and maintain insurance which defends, indemnifies and holds harmless the City of St. Pete Beach, its officers, employees and agents from and against any and all liability, damage claims, demands, costs, judgments, fees, attorney's fees or loss arising directly out of acts or omissions hereunder by the Proposer or third party under the direction or control of the Proposer. Such general and excess liability coverage shall be primary to any other coverage carried by the City of St Pete Beach. Proposer must furnish the City with Certificate of Insurance prior to commencement of work. An

approved Certificate of Insurance furnished by the Proposer's carrier to guarantee the Proposer being insured with the City of St Pete Beach must be named as a certificate holder for this contract. The following minimum coverage:

- Professional Liability Insurance $2,000,000 each occurrence.
- Commercial General Liability Insurance $1,000,000.00.
- Comprehensive General Liability Insurance of $1,000,000.00 each occurrence.
- Personal Injury for $1,000,000.00 each occurrence.
- Automobile Liability $1,000,000.00.
- General Workers Compensation Insurance as required by Florida law.
- Longshore Harbor Workers Compensation Insurance

PROTECTION OF WORK AND PROPERTY
The Proposer shall continuously maintain adequate protection of all their work and materials from damage or theft and shall protect the City's property and all adjacent property from injury or loss arising in connection with activities under their Contract. The Proposer shall make good any such damage, injury, or loss, except such as may be caused by agents or employees of the City.

The Proposer shall take, use, provide, and maintain all necessary precautions, safeguards, and protection to prevent accidents, or injury to persons or property on, about, or adjacent to the site of the work. Should the situation arise that physical security is needed the Proposer will provide security on off days and holidays. The Proposer shall be responsible for all charges incurred with such action.

The Proposer shall post danger signs warning against any hazards created by the work being done under their Contract. They shall designate a responsible member of their organization on the work, whose duty shall be the prevention of accidents, and the name of the person so designated shall be reported to the City Manager or designee and City in writing. In an emergency affecting the safety of life, or of the work or adjoining property, the Proposer, without special instruction or authorization from the City Manager or designee, or City, is hereby permitted to act, at their own discretion, to prevent such threatened loss or injury, and they must take such action if so instructed or authorized by the City Manager or designee. The Proposer shall also protect adjacent property as required by law.

PROPOSAL REVIEW AND CONTRACT AWARD
Failure to submit all documents requested at the time of proposal may deem the Proposer's proposal ineligible for award. The City of St. Pete Beach reserves the right to reject any or all proposals or parts of proposals. The contract shall be awarded by written notice to the responsible and responsive Contractor whose proposal is determined in writing to be the most advantageous to the City, taking into consideration the price and other criteria set forth in this request for proposals. The City may waive any informality.

LOCAL, STATE AND FEDERAL COMPLAINCE REQUIREMENTS
The laws of the State of Florida do apply to any purchase made under this Request for Proposal. Proposers shall comply with all local, state, and federal directives, orders and laws as applicable to their proposal and subsequent contracts include but not limited to Equal Employment Opportunity, Minority Business Enterprise, and OSHA as applicable to this contract.

Compliance with Fla. Stat. 448.095:

- Proposer agrees to comply with all applicable portions of Fla. Stat. 448.095. Proposer must use the

U.S. Department of Homeland Security's E-Verify System, hhtps://e-verify.uscis.gov/emp, to verify the employment eligibility of all employees hired on or after January 1, 2021 during the term of this Agreement.

- Subcontractors (i) Proposer shall also require all subcontractors performing work under this Agreement to use the E-Verify system for any employees they may hire during the term of this Agreement. (ii) Subcontractors shall provide Proposer with an affidavit stating the subcontractor does not employ, contract with, or subcontract with an unauthorized alien, as defined by Fla. Stat. 448.095 (iii) Proposer shall provide a copy of such affidavit to the City upon receipt and shall maintain a copy for the duration of the Agreement.

- Proposer must provide evidence of compliance with Fla. Stat. 448.05 by January 1, 2021. Evidence may consist of, but is not limited to, providing notice of Proposer's E-Verify number.

- Failure to comply with this provision is a material breach of the Agreement, and the City may choose to terminate the Agreement at its sole discretion. Proposer may be liable for all costs associated with the City securing the same services, inclusive, but not limited to, higher costs for the same services and proposal costs (if necessary). Any challenge to termination under this provision must be filed in the Circuit Court no later than 20 calendar days after the date of termination. If this agreement is terminated for a violation of the statute by the Proposer, the Proposer may not be awarded a public agreement for a period of 1 year after date of termination.

RESERVES THE RIGHT

The City reserves the right to accept or reject any and/or all proposals, to waive irregularities and technicalities, and to request re-submission. If only one proposal is received by the proposal date and time listed, the proposal may or may not be rejected by the City depending upon proposal review and the needs of the City.

The City reserves the right to select a firm with or without additional interviews and may decide to select any of the firms submitting proposals. The City reserves the right to award the contract to a responsible proposer submitting a responsible proposal, with a resulting negotiated agreement which is most advantageous and in the best interest of the City.

Proposers, Proposers, their agents, and associates shall not contact or solicit any City Commission member, City employee, or official regarding this RFP during any phase of the proposalding process. Failure to comply with the provision may result in disqualification of the Proposer, at the option of the City. Only that individual listed, or an approved designee, as the contact person for this RFP shall be contacted.

SUBMITTAL WITHDRAWAL

After submittals are opened, corrections or modifications to submittals are not permitted, but a responding firm may be permitted to withdraw an erroneous submittal prior to the award by the City Commission, if the following is established:

- That the responding firm acted in good faith in submitting the submittal;
- That in preparing the submittal there was an error of such magnitude that enforcement of the submittal would work severe hardship upon the respondent;
- That the error was not the result of gross negligence or willful inattention on the part of the respondent;
- That the error was discovered and communicated to the City within twenty-four (24) hours of submittal opening, along with a request for permission to withdraw the submittal; or
- The responding firm submits documentation and an explanation of how the error was made.

CONE OF SILENCE
Respondents to this solicitation or persons acting on their behalf may not contact, between the release of the solicitation and the end of the 72-hour period following the agency posting the notice of intended award, excluding Saturdays, Sundays, and state holidays, any employee or officer of the executive or legislative branch concerning any aspect of this solicitation, except in writing to the procurement officer or as provided in the solicitation documents. Violation of this provision may be grounds for rejecting a response.

TERMINATION
The resulting contract may be canceled by the City when:

- Sufficient funds are not available to continue its full and faithful performance of this contract.
- There is sub-standard or non-performance of contract.
- The City wishes to terminate at any time and for any reason, upon giving thirty (30) days prior written notice to the other party.

The resulting contract may be canceled by either party in the event of substantial failure to perform in accordance with the terms by the other party through no fault of the terminating party.

FISCAL NON-FUNDING

If funds for the requested services described herein are not appropriated via the annual budget adoption process, the City reserves the right to cancel this Agreement immediately upon written notice to the vendor.

PROJECT RECORDS
The awarded firm shall maintain auditable records concerning the procurement to account for all receipts and expenditures, and to document compliance with the Contract. These records shall be kept in accordance with generally accepted accounting methods, and the City of St. Pete Beach reserves the right to determine the record-keeping method in the event of non-conformity. These records shall be maintained for three (3) years after final payment has been made and shall be readily available to City personnel with reasonable notice, and to other persons in accordance with the Florida Public Disclosure Statutes. Additionally, the awarded firm shall abide by and comply with Florida Statutes regarding public records. Specifically, the firm shall be aware of the provisions found in Section 119.0701, Florida Statutes.

Upon completion of the project, all reports, studies, recommendations, forms, and other project specific information will need to be submitted in paper and in an electronic file format (.PDF, .JPEG) on CD or USB storage device.

V. REFERENCES & MINIMUM QUALIFICATIONS

Provide at least three (3) or more professional, business references with which you have contracted to provide similar services in the past five (5) years. Include the name of the person, its organization, telephone number, fax number, and e-mail address. Include any governmental agencies, with the same contact and descriptive information for which you have provided similar service within the past five (5) years.

Provide a brief description of the history and capabilities of the firm. Describe the types of projects or services the firm performs/has performed and the dollar value of each. Provide information regarding your firm's ability to complete this project. Demonstrate that the firm's personnel have experience with similar projects.

Identify all unresolved and ongoing claims and disputes against your firm in excess of $500,000. Include any claims against the principals of your firm or any claims your company may have against a third party. Provide a history of litigation, including the outcomes, for the past five (5) years.

The responding firm shall provide a statement of assurance that the firm is not presently in violations of any statutes or regulatory rules that might have an impact on the firm's operations. All applicable laws and regulations of the State of Florida and ordinances and regulations of the City of St. Pete Beach will apply.

Provide the overall bonding capacity for the company and provide a history of any claims against the Proposer's previous bonds for the past five (5) years.

The City shall be the sole final judge of qualifications of Proposer to perform service and reserves the exclusive right to accept or reject any proposal as it deems to be in the best interests of the City. The City reserves the right to make such investigation, as it deems necessary, to determine the ability of any proposer to perform the work or service requested. Failure to comply with the requirements of this section may be grounds for rejecting a response.

VI. CONTRACTOR'S PROPOSAL SUBMITTAL

The company that is submitting a proposal declares that it has extensive experience in Wastewater System Rehabilitation Services, including manhole rehabilitation, pipe lining and point repairs.

The undersigned, as Proposer, hereby declares that the only person or persons interested in the Proposal as principal or principals are named herein, and that no person other than herein mentioned has any interest in the Proposal or in the Agreement to be entered into; that this Proposal or Agreement is made without connection with any other person, company, or parties making a Proposal; and that it is in all respects fair and in good faith without collusion or fraud.

The Proposer further declares that they have examined the site of the work and informed themselves fully in regard to all conditions pertaining to the place where the work is to be done; that they have examined the Plans and Specifications for the work and Contract Documents relative thereto, and have read all special provisions furnished prior to the opening of proposals; and that they have satisfied themselves relative to the materials to be supplied and work to be performed.

The Proposer proposes and agrees, if the Proposal is accepted, to contract with the City of St. Pete Beach, Florida, in the form of an Agreement specified for **"Wastewater System Rehabilitation Services"** in St. Pete Beach, Florida, in full and complete accordance with the shown, noted, described, and reasonably intended requirements of the Plans, Specifications, and Contract Documents, to the full and entire satisfaction of the City of St. Pete Beach, Florida.

The successful Proposer shall be required to utilize the template Agreement in this Request for Proposals (RFP) and any questions regarding the Agreement must be addressed during the RFP process before submittal. The City reserves the right to respond or not respond to questions in the form of an addendum.

The Proposer proposes to furnish all materials, equipment, labor, and perform the work submitted in their proposal schedule for the City of St. Pete Beach **"Wastewater System Rehabilitation Services."**

COMPANY:_____ DATE: _____

ADDRESS:_____ PHONE:_____

PROPOSER: _____ NAME: _____

(SIGNATURE) (PRINT NAME & TITLE)

STATE OF FLORIDA
COUNTY OF _____

The foregoing instrument was sworn to (or affirmed), subscribed, and acknowledged before me by means of ☐ physical presence or ☐ online notarization, this _____ day of _____, 2026, by_____, who is personally known to me or has produced _____ as identification.

(SEAL)

_____
Notary Public – State of Florida

_____
(Print, Type, Stamp, or Commissioned Name of Notary Public)

SUBMIT PROPOSAL TO: Electronically via Bonfire only

VII. PUBLIC ENTITY CRIMINAL AFFIDAVIT

SWORN STATEMENT – PUBLIC ENTITY CRIMES

PURSUANT TO § 287.133 (3)(a), FLORIDA STATUTES, ON PUBLIC ENTITY CRIMES
THE FORM MUST BE SIGNED AND SWORN TO IN THE PRESENCE OF A NOTARY PUBLIC OR OTHER OFFICIAL AUTHORIZED TO ADMINISTER OATHS.

1. This sworn statement is submitted to: City of St. Pete Beach

   by: _____
   (Print individual's name and title)

   for: _____
   (Print name of entity submitting sworn statement)

   at: _____
   (Business address)

   and (if applicable), its Federal Employer Identification Number (FEIN):

   _____
   (FEIN)
   or, if the entity has no FEIN, include the Social Security Number:

   _____
   (SSN)

   by the individual signing this sworn statement: _____
   (Signature)

2. I understand that a "public entity crime" as defined in § 287.133 (1)(g), Fla. Stat., means a violation of any State or Federal law by a person with respect to and directly related to the transaction of business with any public entity or with an agency or political subdivision of any other state or of the United States including, but not limited to, any proposal or contract for goods or services, any lease for real property, or any contract for the construction or repair of a public building or public work, involving antitrust, fraud, theft, bribery, collusion, racketeering, conspiracy, or material misrepresentation.

3. I understand that "convicted" or "conviction" as defined in § 287.133 (1)(b), Fla. Stat., means a finding of guilt or a conviction of public entity crime with or without an adjudication of guilt in any Federal or State trial court of record relating to charges brought by indictment or information after July 1, 1989, as a result of a jury verdict, non-jury trial, or entry of a plea of guilty or nolo contendere.

4. I understand that an "affiliate" as defined in § 287.133 (1)(a), Fla. Stat., means:
   a. A predecessor or successor of a person convicted of a public entity crime or
   b. An entity under the control of any natural person who is active in the management of the entity and who has been convicted of a public entity crime. The term "affiliate" includes those officers, directors, executives, partners, shareholders, employees, members, and agents who are active in the management of an affiliate. The ownership by one (1) person of shares constituting a controlling interest in another person or a pooling of equipment or income among persons when not for fair market value under the arm's length agreement, shall be a prima facie case that one (1) person controls another person. A person who knowingly enters into a joint venture with a person who has been convicted of a public crime in Florida during the preceding thirty-six (36) months shall be considered an

affiliate.

5. I understand that a "person" as defined in Section 287.133 (1)(e), Fla. Stat., means any natural person or any entity organized under the laws of any state or of the United States with the legal power to enter into a binding contract and which proposals or applies to proposal on contracts let by a public entity, or which otherwise transacts or applies to transact business with a public entity. The term "person" includes those officers, directors, executives, partners, shareholders, employees, members, and agents who are active in management of an entity.

6. Based on information and belief, the **statement which I have marked below is true** in relation to the entity submitting this sworn statement (indicate which statement applies).

☐ Neither the entity submitting this sworn statement, nor any of its officers, directors, executives, partners, shareholders, employees, members, or agents who are active in the management of the entity nor any affiliate of the entity has been charged with and convicted of a public entity crime subsequent to July 1, 1989.

☐The entity submitting this sworn statement or one (1) or more of its officers, directors, executives, partners, shareholders, employees, members, or agents who are active in the management of the entity or an affiliate of the entity has been charged with and convicted of a public entity crime subsequent to July 1, 1989.

☐The entity submitting this sworn statement or one (1) or more of its officers, directors, executives, partners, shareholders, employees, members, or agents who are active in the management of the entity or an affiliate of the entity has been charged with and convicted of a public entity crime subsequent to July 1, 1989. However, there has been a subsequent proceeding before a Hearing Office of the State of Florida, Division of Administrative Hearings and the Final Order entered by the Hearing Officer determined that it was not in the public interest to place the entity submitting this sworn statement on the convicted vendor list (attach a copy of the final order).

I UNDERSTAND THAT THE SUBMISSION OF THIS FORM TO THE CONTRACTING OFFICE FOR THE PUBLIC ENTITY IDENTIFIED IN PARAGRAPH 1 ABOVE IS FOR THE PUBLIC ENTITY ONLY AND THAT THIS FORM IS VALID THROUGH DECEMBER 31 OF THE CALENDAR YEAR IN WHICH IT IS FILED. I ALSO UNDERSTAND THAT I AM REQUIRED TO INFORM THE PUBLIC ENTITY PRIOR TO ENTERING INTO A CONTRACT IN EXCESS OF THE THRESHOLD AMOUNT PROVIDED IN SECTION 287.017, FLORIDA STATUTES, FOR CATEGORY TWO OF ANY CHANGE IN THE INFORMATION CONTAINED IN THIS FORM.

STATE OF FLORIDA
COUNTY OF _____

The foregoing instrument was sworn to (or affirmed), subscribed, and acknowledged before me by means of ☐ physical presence or ☐ online notarization, this _____ day of _____, 2026, by_____, who is personally known to me or has produced _____ as identification.

(SEAL)

_____
Notary Public – State of Florida

_____
(Print, Type, Stamp, or Commissioned
Name of Notary Public)

VIII. NON-COLLUSION AFFADAVIT

STATE OF _____ COUNTY OF _____

I state that **I**_____of_____,
(Name and Title) (Name of Firm)

I am authorized to make this affidavit on behalf of my firm and its owner, directors and officers. I am the person responsible in my firm for the price(s) and amount(s) of this Response, and the preparation of the Response. I state that:

1. The price(s) and amount(s) of this Response have been arrived at independently and without consultation, communication or agreement with any other Provider, potential provider, Proposal, or potential Proposal.
2. Neither the price(s) nor the amount(s) of this Response, and neither the approximate price(s) nor approximate amount(s) of this Response, have been disclosed to any other firm or person who is a Provider, potential Provider, Proposal, or potential Proposal, and they will not be disclosed before Proposal opening.
3. No attempt has been made or will be made to induce any firm or persons to refrain from submitting a Response for this contract, or to submit a price(s) higher that the prices in this Response, or to submit any intentionally high or noncompetitive price(s) or other form of complementary Response.
4. The Response of my firm is made in good faith and not pursuant to any agreement or discussion with, or inducement from, any firm or person to submit a complementary or other noncompetitive Response.
5. _____, its affiliates, subsidiaries, officers, director, and employees (Name of Firm) are not currently under investigation, by any governmental agency and have not in the last three years been convicted or found liable for any act prohibited by State or Federal law in any jurisdiction, involving conspiracy or collusion with respect to Proposal, on any public contract, except as follows:

I state that I and the named firm understand and acknowledge that the above representations are material and important, and will be relied on by the State of Florida for which this Response is submitted. I understand and my firm understands that any misstatement in this affidavit is, and shall be treated as, fraudulent concealment from the State of Florida of the true facts relating to the submission of responses for this contract.

Name of Organization:_____Signed By: _____

Print Name:_____

The foregoing instrument was sworn to (or affirmed), subscribed, and acknowledged before me by means of ☐ physical presence or ☐ online notarization, this _____ day of _____, 2026, by _____, who is personally known to me or has produced _____ as identification.

(SEAL)

_____
Notary Public – State of Florida

_____
(Print, Type, Stamp, or Commissioned
Name of Notary Public)

CONTRACT DOCUMENTS

TECHNICAL SPECIFICATIONS

FOR

St. Pete Beach
The Sunset Capital of Florida
PUBLIC SERVICES

CITY OF ST. PETE BEACH

SOLICITATION NAME:

Wastewater System Rehabilitation Services

MANHOLE REHABILITATION

PIPE LINING

POINT REPAIRS

TABLE OF CONTENTS

SECTION 1 – GENERAL

1.01 LOCATION OF THE WORK SITE AND ACCESS

1.02 SCOPE OF WORK

1.03 PROJECT SUMMARY

1.04 CONTRACT DRAWINGS AND SPECIFICATIONS

1.05 FIELD ENGINEERING

1.06 SAFEGUARDING SURVEY MARKS

1.07 INSPECTION AUTHORITY

1.08 PROJECT SCHEDULE

1.09 MATERIALS AND EQUIPMENT

1.10 MANUFACTURER

1.11 SAMPLES

1.12 EQUIVALENT QUALITY

1.13 MATERIAL AND EQUIPMENT DELIVERY AND STORAGE

1.14 SERVICE OF MANUFACTURER'S REPRESENTATIVE

1.15 CONTAMINANTS CONTAINMENT/DISPOSITION

1.16 PREVENTION, CONTROL, AND ABATEMENT OF EROSION AND WATER POLLUTION

1.17 MAINTENANCE OF STORM DRAINAGE SYSTEM

1.18 SPILL OR DISCHARGE OF WASTEWATER OR RECLAIMED WATER

1.19 SEQUENCE OF OPERATION

1.20 WORK IN STREETS AND HIGHWAYS

1.21 WORK IN PRIVATE PROPERTY

1.22 PERMITS

1.23 FIELD OFFICE AND APPURTENANT STRUCTURES

1.24 CONTRACTOR'S SIGN

1.25 MOBILIZATION

1.26 WATER PURCHASE

1.27 TRAFFIC CONTROL

1.28 TREE PROTECTION

1.29 TREE REMOVAL AND REPLACEMENT

1.30 UTILITIES

1.31 NEIGHBORHOOD NOTIFICATION

1.32 SHOP, FIELD, AND LABORATORY TESTING

1.33 SALVAGED MATERIALS

SECTION 2 – PAY ITEM DESCRIPTIONS

2.01 SCOPE

2.02 ESTIMATED QUANTITIES

2.03 WORK OUTSIDE AUTHORIZED LIMITS

2.04 MEASUREMENT STANDARDS

2.05 AREA MEASUREMENTS

2.06 LUMP SUM ITEMS

2.07 PAY ITEM DESCRIPTIONS

WASTEWATER SYSTEM MANHOLE REHABILITATION
WASTEWATER SYSTEM PIPE LINING
WASTEWATER SYSTEM POINT REPAIRS

SECTION 3 – SUBMITTALS

3.01 GENERAL

3.02 CONTRACTOR RESPONSIBILITIES

3.03 SUBMITTAL NUMBERING

3.04 SUBMITTAL REVIEW

SECTION 4 – AS BUILTS

4.01 MINIMUM AS-BUILT DRAWING STANDARDS FOR ALL AS-BUILT DRAWINGS

4.02 AS-BUILT DRAWINGS PREPARATION

4.03 AS-BUILT DRAWINGS SUBMITTAL

SECTION 5 – CONCRETE, MASONRY, AND REINFORCING STEEL

5.01 GENERAL

5.02 PORTLAND CEMENT CONCRETE

5.03 REINFORCING STEEL

5.04 FIBROUS CONCRETE REINFORCEMENT

5.05 PLACEMENT OF REINFORCEMENT

5.06 PLACEMENT OF CONCRETE

5.07 CURING OF CONCRETE

5.08 FINISHING OF CONCRETE

5.09 CONCRETE BRICK

5.10 CLAY BRICK

5.11 MASONRY BLOCK

5.12 MORTAR

5.13 GROUT

SECTION 6 – EXCAVATION AND BACKFILL

6.01 GENERAL

6.02 TRENCH SAFETY

6.03 WORK IN WETLANDS, MANGROVES, AND PRESERVATION AREAS

6.04 CLEARING AND GRUBBING

6.05 ROADWAY EXCAVATION

6.06 TRENCH EXCAVATION

6.07 STRUCTURE EXCAVATION

6.08 EXCAVATION OF UNSUITABLE MATERIAL

6.09 SHEETING, SHIELDING, AND SLOPING

6.10 DEWATERING

6.11 BORROW MATERIAL

6.12 BEDDING MATERIAL

6.13 STRUCTURAL SLAB BEDDING

6.14 BACKFILL MATERIAL

6.15 BACKFILL COMPACTION

6.16 BACKFILLING OF TRENCH

6.17 BACKFILLING STRUCTURES

6.18 BACKFILLING UNDER ROADWAYS

6.19 DISPOSING OF LEFTOVER MATERIAL

6.20 ADJACENT FACILITIES

6.21 TEMPORARY SUPPORTS

6.22 FLOWABLE FILL

SECTION 7 – SURFACE RESTORATION

7.01 GENERAL

7.02 ROADWAY RESTORATION

7.03 TEMPORARY PAVEMENT

7.04 SHELL BASE

7.05 LIMEROCK BASE

7.06 CRUSHED (RECLAIMED) CONCRETE BASE

7.07 ASPHALTIC CONCRETE PAVEMENT

7.08 BRICK PAVEMENT

7.09 CURB AND GUTTER

7.10 CONCRETE SIDEWALK

7.11 HEXAGON BLOCK SIDEWALK

7.12 DRIVEWAY AND PARKING LOT

7.13 DRIVEWAY - ASPHALT

7.14 DRIVEWAY - CONCRETE

7.15 DRIVEWAY - PEAGRAVEL

7.16 DRIVEWAY - SHELL

7.17 GRASS

7.18 EXPANSION JOINT MATERIAL

SECTION 8 – PAINTING

8.01 GENERAL

8.02 SUBMITTALS

8.03 PAINTING SCHEDULES AND SYSTEMS

8.04 EXECUTION

SECTION 9 – PIPING MATERIALS: DUCTILE IRON PIPE AND FITTINGS

9.01 GENERAL

9.02 PIPE

9.03 FITTINGS

9.04 JOINTS – BURIED PIPE AND FITTINGS

9.05 JOINTS – EXPOSED PIPE AND FITTINGS

9.06 DETECTION

9.07 ZINC/EPOXY/FLUOROPOLYMER PROTECTIVE COATING

SECTION 10 – PIPING MATERIALS: PVC PRESSURE PIPE

10.01 GENERAL

10.02 PIPE

10.03 FITTINGS

10.04 JOINTS

10.05 DETECTION

10.06 MARKINGS AND COLOR CODING

10.07 HARNESSING

10.08 INSPECTION AND TESTING

SECTION 11 – PIPING MATERIALS: HDPE PRESSURE PIPE

11.01 SCOPE OF WORK

11.02 QUALIFICATIONS

11.03 POLYETHYLENE PRESSURE PIPE

11.04 JOINTS

11.05 DETECTION

11.06 IDENTIFICATION

11.07 INSTALLING POLYETHYLENE PRESSURE PIPE AND FITTINGS

11.08 INSPECTION AND TESTING

SECTION 12 – PRESSURE PIPE CONSTRUCTION

12.01 GENERAL

12.02 DATA TO BE SUBMITTED

12.03 MATERIALS

12.04 CONNECTIONS TO EXISTING MAINS

12.05 CONSTRUCTION OPERATIONS

12.06 LAYING AND JOINTING PRESSURE PIPELINES

12.07 PIPELINE CLEANING

12.08 TESTING AND DISINFECTION OF PRESSURE PIPELINES

12.09 SURFACE RESTORATION AND MISCELLANEOUS

SECTION 13 – DIRECTIONAL BORING OF PIPE

13.01 GENERAL

13.02 TESTING

13.03 QUALIFICATIONS

13.04 SUBMITTALS

13.05 MATERIALS

13.06 SITE CONDITIONS

13.07 DAMAGE RESTORATION & REMEDIATION

13.08 QUALIFICATIONS FOR REJECTION OF DIRECTIONAL BORE

13.09 PRODUCT LOCATING AND TRACKING

13.10 PRODUCT BORE HOLE DIAMETER

13.11 EQUIPMENT REQUIREMENTS

13.12 THRUST / PULLBACK REQUIREMENTS

13.13 INSTALLATION PROCESS

13.14 PIPELINE TESTING

SECTION 14 – JACKING AND BORING

14.01 SCOPE OF WORK

14.02 OPERATIONS ON THE CITY OF ST. PETE BEACH OR STATE OF FLORIDA PROPERTY

14.03 SHOP DRAWINGS

14.04 SUBMITTALS

14.05 CASING PIPE

14.06 CARRIER PIPE

14.07 CASING SPACERS

14.08 TUNNEL LINER PLATES

14.09 CASING END SEALS

14.10 CONSTRUCTION

14.11 INSTALLING CARRIER PIPE IN CASING PIPE

14.12 TESTING

SECTION 15 – FLUSHING, TESTING, AND DISINFECTION

15.01 WORK INCLUDED

15.02 REFERENCES

15.03 SUBMITTALS

15.04 QUALITY ASSURANCE

15.05 REGULATORY REQUIREMENTS

15.06 DISINFECTION CHEMICALS

15.07 FLUSHING AND PRESSURE TESTING – PIPING

15.08 DISINFECTION FOR WATER MAIN INSTALLATION

15.09 BACTERIOLOGICAL SAMPLING FOR WATER MAIN INSTALLATION

15.10 QUALITY CONTROL

15.11 CONNECTIONS TO EXISTING MAINS

SECTION 16 – SANITARY SEWER BYPASS PUMPING

16.01 SCOPE OF WORK

16.02 PUBLIC IMPACTS

16.03 SUBMITTALS

16.04 EQUIPMENT

16.05 SITE CONDITIONS

16.06 ON-SITE MONITORING

16.07 OPERATIONS

16.08 DAMAGE RESTORATION & REMEDIATION

SECTION 17 – VALVES AND APPURTENANCES

17.01 GENERAL

17.02 TOOLS

17.03 GATE VALVES

17.04 PRESSURE SUSTAINING AND CHECK VALVE

17.05 BALL VALVES FOR PVC PIPE

17.06 BUTTERFLY VALVES

17.07 PLUG VALVES

17.08 VALVE ACTUATORS

17.09 AIR RELEASE VALVES

17.10 VALVE BOXES

17.11 CORPORATION COCKS

17.12 FLANGE ADAPTER COUPLINGS

17.13 FLEXIBLE COUPLINGS

17.14 HOSE BIBS

17.15 SLOW CLOSING AIR AND VACUUM VALVES

17.16 SURGE ANTICIPATOR VALVES

17.17 CHECK VALVES

17.18 HYDRANTS

17.19 RESTRAINING CLAMPS

17.20 TAPPING SLEEVES AND GATE VALVES

17.21 SINGLE ACTING ALTITUDE VALVES

17.22 INSTALLATION

17.23 HYDRANT INSTALLATION

17.24 SHOP PAINTING

17.25 FIELD PAINTING

17.26 INSPECTION AND TESTING

SECTION 18 – SANITARY SEWER CONSTRUCTION

18.01 GENERAL

18.02 DATA TO BE SUBMITTED

18.03 MATERIALS

18.04 CONNECTIONS TO EXISTING SANITARY SEWERS

18.05 CONSTRUCTION OPERATIONS

18.06 MANHOLE CONSTRUCTION

18.07 LAYING AND JOINTING PIPELINES

18.08 TESTING OF SEWER PIPELINES

18.09 SANITARY SEWER PIPE REPAIRS

SECTION 19 – CEMENTITIOUS REHABILITATION – NOT APPLICABLE

SECTION 20 – CCTV INSPECTION AND PIPE CLEANING

20.01 SCOPE OF SERVICES AND WORK PHASING FOR SYSTEM CCTV INSPECTION AND PIPE CLEANING

20.02 COMPLIANCE AND ACCEPTANCE

20.03 CLEANING EQUIPMENT

20.04 REFERENCES DOCUMENTS

20.05 GENERAL EXECUTION

20.06 SUBMITTALS

20.07 OWNER RIGHTS

20.08 EMERGENCY RESPONSE

20.09 SEQUENCE OF INSPECTION AND CLEANING

SECTION 21 – CURED-IN-PLACE PIPE LINER (CIPP)

21.01 GENERAL

21.02 REFERENCE DOCUMENTS

21.03 QUALIFICATION REQUIREMENTS

21.04 SUBMITTALS

21.05 MATERIALS

21.06 STRUCTURAL REQUIREMENTS

21.07 INSTALLATION

21.08 CIPP MAIN LINER TERMINATION AND CONNECTION IN MANHOLES

21.09 SERVICE RECONNECTION

21.10 INSTALLATION RESPONSIBILITIES FOR INCIDENTAL ITEMS

21.11 QUALITY ASSURANCE PROCEDURES

SECTION 22 – PRECAST POLYMER CONCRETE STRUCTURES – NOT APPLICABLE

SECTION 23 – FIBERGLASS WET WELL OR MANHOLE LINER

23.01 GENERAL

23.02 MATERIALS

23.03 WET WELL FABRICATION

23.04 FRP MANHOLE LINER DESIGN

23.05 PHYSICAL REQUIREMENTS

23.06 TEST METHODS

23.07 INSTALLATION

23.08 SHIPPING AND HANDLING

SECTION 24 – SUBMERSIBLE SEWAGE PUMPS – NOT APPLICABLE

SECTION 25 – PUMP STATION CONTROLS – NOT APPLICABLE TO

SECTION 26 – ELECTRICAL – NOT APPLICABLE

SECTION 27 – VARIABLE FREQUENCY DRIVES – NOT APPLICABLE

SECTION 28 – ODOR CONTROL SYSTEMS – NOT APPLICABLE

SECTION 29 – PRECAST CONCRETE BUILDING – NOT APPLICABLE

SECTION 30 – DIESEL DRIVEN GENERATOR WITH WEATHERPROOF ENCLOSURE – NOT APPLICABLE

SECTION 31 – MISCELLANEOUS EQUIPMENT – NOT APPLICABLE

SECTION 32 – STATE REVOLVING FUND (SRF) REQUIREMENTS – NOT APPLICABLE

SECTION 33 – FRAC-OUT PLAN FOR SUBAQUEOUS CROSSINGS

33.01 GENERAL

33.02 BEST MANAGEMENT PRACTICES (BMPs)

33.03 FRAC-OUT PLAN

33.04 RELEASE PROCEDURE

33.05 DRILLING MUD CONTAINMENT PLAN

SECTION 34 – MANHOLE INSPECTION

34.01 SCOPE OF SERVICES AND WORK PHASING

34.02 REQUIREMENTS

34.03 QUALITY ASSURANCE

34.04 SHOP DRAWINGS AND SUBMITTALS

34.05 NOTIFICATION

34.06 EXECUTION

34.07 MANDATORY INSPECTION HEADER INFORMATION

34.08 MANHOLE COMPONENT OBSERVATIONS

34.09 MANHOLE INTERIOR INSPECTION

34.10 CONNECTING PIPE DETAILS

34.11 MANHOLE SKETCH, MAP, UPDATE, AND NOTES

34.12 NOTIFICATION OF EMERGENCY CONDITIONS

34.13 COMPLETION

34.14 PHOTOGRAPH REQUIREMENTS

34.15 MANHOLE NUMBERING, FORMS, AND DEFECT CODES

34.16 SITE RESTORATION

34.17 DELIVERABLES

SECTION 35 – CHEMICAL SEALING OF HOST PIPE AND SERVICE CONNECTIONS

35.01 GENERAL

35.02 PRODUCTS

35.03 SUBMITTALS

35.04 EQUIPMENT

35.05 EXECUTION

SECTION 36 – REMOVAL OF PROTRUDING SERVICE CONNECTIONS

36.01 GENERAL

36.02 PRODUCTS

36.03 EXECUTION

SECTION 37 – WASTEWATER STRUCTURE REHABILITATION

37.01 GENERAL

37.02 GOVERNING STANDARDS

37.03 DEFINITIONS

37.04 QUALIFICATIONS

37.05 SUBMITTALS

37.06 QUALITY ASSURANCE/ QUALITY CONTROL

37.07 CONTAINMENT AND SITE CONDITIONS

37.08 WARRANTY

37.09 MATERIALS

37.10 REPAIR & PREPARATION

37.11 COATING MATERIAL APPLICATION

37.12 COATING SYSTEM SPECIFICATION SHEETS

END OF SECTION

THIS PAGE INTENTIONALLY LEFT BLANK

SECTION 1 - GENERAL

1.01 LOCATION OF THE WORK SITE AND ACCESS

Access to the work sites shall be over streets and walkways. Any damage to existing pavement surface and base or other surface improvements outside the Contract Pay Limits, attributable to the Contractor's activities, shall be restored to like-new condition by the Contractor at the Contractor's expense.

The proposed work will be located within the City of St. Pete Beach in Pinellas County, FL, throughout the entire wastewater collection and transmission system. Each asset to be rehabilitated and the type of rehabilitation required will be identified in each individual Work Order with the location shown on corresponding geographical exhibits.

1.02 SCOPE OF WORK

The Contractor shall furnish all labor, superintendence, materials, power, light, heat, fuel, water, tools, appliances, equipment, supplies, shop drawings, working drawings and other means of construction necessary or proper for performing and completing the work. The Contractor is responsible for obtaining all required permits necessary for the work, including all applications and review fees, other than those permits which may have already been obtained. The Contractor shall perform and complete the work in a speedy and efficient manner consistent with safety of life and property and to the city’s satisfaction, and in strict accordance with the Contract Documents. The Contractor shall repair or restore all structures and property damaged or disturbed during performance of the work.

The cost of incidental work described in this General Section, for which there are no specific Contract Items, shall be considered as part of the general cost of doing the work and shall be included in the prices for the various Contract Items. No additional payment will be made.

The Contractor shall be solely responsible for the means and methods of construction and the adequacy of his workmanship, materials, and equipment.

1.03 PROJECT SUMMARY

Wastewater System Manhole Rehabilitation (Manhole Project)

The Contractor shall furnish all labor, material, equipment, and services necessary for manhole rehabilitation. The work shall be completed at various locations through the City’s wastewater service area and shall include, but is not limited to, maintenance of traffic, temporary by-pass pumping and/or diversion of wastewater, cleaning, removal and disposal of all sand, rubble, deposits, and other accumulated debris, re-building manhole bench and channels, ring (frame) and cover adjustment and replacement, pavement restoration, inflow/infiltration elimination, surface preparation, cementitious and polymer coatings installation, internal chimney sealing, manhole cover insert installation, testing, project site cleanup and restoration, and all other incidentals as required and directed by the Engineer to complete the work.

Wastewater System Pipe Lining (Lining Project)

The Contractor shall furnish all labor, material, equipment, and services necessary for wastewater pipe rehabilitation using Cured-In-Place-Pipe (CIPP) lining. The work shall be completed at various locations through the City's wastewater service area and shall include, but is not limited to, maintenance of traffic, temporary by-pass pumping and/or diversion of wastewater, cleaning, removal and disposal of all sand, rubble, deposits, and other accumulated debris, CIPP liner installation, reconnection of service laterals, testing of CIPP liners, project site cleanup and restoration, and all other incidentals as required and directed by the Engineer to complete the work.

Wastewater System Point Repairs (Point Repair Project)

The Contractor shall furnish all labor, material, equipment, and services necessary for wastewater point repairs. The work shall be completed at various locations throughout the City's wastewater service area and shall include, but is not limited to, maintenance of traffic, temporary by-pass pumping and/or diversion of wastewater, dewatering, directional drilling, jack and boring, remove unsuitable materials below trench grade, sanitary sewer gravity and force main installation, force main and gravity main connections, remove out of service gravity and force mains, install manhole connections, grout out of service pipe, install valves and associated appurtenances, project site cleanup and restoration, and all other incidentals as required and directed by the Engineer to complete the work.

1.04 CONTRACT DRAWINGS AND SPECIFICATIONS

Where the Contract Drawings and Specifications are not in agreement, the Contract Drawings shall govern. The Contractor shall furnish all labor, equipment, and materials to construct the Project and all miscellaneous and appurtenant work complete in place as specifically described and included under said each Contract Pay Item as shown, specified, or directed by the Engineer in accordance with the obvious or expressed intent of the Contract.

The Technical Specifications for the Project that reference FDOT-SSRBC (Florida Department of Transportation - Standard Specifications for Road and Bridge Construction) pertain to the most recent edition at the date of issuance of these Specifications.

1.04.01 COPIES FURNISHED TO CONTRACTOR

The Contractor shall furnish each of the subcontractors, manufacturers, and material men such copies of the Contract Documents as may be required for their work. Additional copies of the Contract Drawings and Specifications, when requested, may be furnished to the Contractor at cost of reproduction.

1.04.02 SUPPLEMNTARY DRAWINGS

When, in the opinion of the City, it becomes necessary to explain more fully the work to be done or to illustrate the work further or to show any changes which may be required, drawings known as Supplementary Drawings, with specifications pertaining thereto, will be prepared by the Engineer and the City and provided to the Contractor.

1.04.03 CONTRACTOR TO CHECK CONTRACT DRAWINGS AND DATA

The Contractor shall verify all dimensions, quantities and details shown on the Contract Drawings, Supplementary Drawings, Schedules, Specifications or other data received from the City or the Engineer and shall notify the City and Engineer of all errors, omissions, conflicts, and discrepancies found therein. Failure to discover or correct errors, conflicts or discrepancies shall not relieve the Contractor of full responsibility for unsatisfactory work, faulty construction or improper operation resulting therefrom nor from rectifying such conditions at the Contractor's own expense. The Contractor shall assume all responsibility for the making of estimates of the size, kind, and quality of materials and equipment included in work to be done under the Contract with approval by the City.

1.05 FIELD ENGINEERING

The Contractor shall establish and provide all vertical and horizontal control points for this Project including benchmarks. The Contractor shall provide the field layout surveying necessary to properly construct the work as indicated on the Contract Drawings.

All field layout surveying shall be performed under the supervision of a Professional Land Surveyor (Chapter 472, Florida Statutes). The Contractor shall submit the name and registration number of Surveyor as directed by the Engineer. The Engineer reserves the right to check all survey staking and to require adjustments or re-staking by the Contractor in the event that conflicts, or errors are detected.

Water pressure pipelines that are 8-inch or less diameter shall be installed with the required cover using horizontal control stakes provided by the Contractor. Sanitary sewer and sanitary pressure pipelines greater than 8-inch diameter shall be installed using an approved method for line and grade control. Methods for line and grade control shall be submitted to the Engineer for review and acceptance, as specified for shop drawings. Sketches shall be provided by the Contractor showing vertical adjustment necessary for pressure pipelines to adequately clear storm drains and other utilities.

1.06 SAFEGUARDING SURVEY MARKS

The Contractor shall safeguard all existing property monuments, benchmarks, and other survey marks adjacent to and within the Project limits and shall bear the cost of re-establishing them if disturbed or destroyed.

1.07 INSPECTION AUTHORITY

The City or Engineer has ultimate responsibility for contract administration and inspection for this Project. The City or Engineer may assign field inspection responsibilities to a Design Professional and/or City Inspector. Each step of construction is subject to review and acceptance by the City or Engineer prior to proceeding with a subsequent step.

During the progress of the Work and up to the date of final acceptance, the Contractor shall at all times afford representatives of the City, the County, the State, the Department of Environmental

Protection, the Department of Transportation, the Department of Labor, or any other agency with jurisdiction, every reasonable, safe, and proper facility for observation of the work done or being done at the site, and also the manufacture or preparation of materials and equipment at the place of such manufacture or preparation.

The Project line of authority will be presented at the Preconstruction Conference.

1.08 PROJECT SCHEDULE

The Contractor shall submit an electronic version in PDF form within 30 days following the Preconstruction Conference of each Work Order.

Scheduling and progress reporting shall be accomplished using a bar chart to provide a clear and concise comparison of progress.

1.09 MATERIALS AND EQUIPMENT

All materials, appliances, and types of construction shall be in accordance with the Technical Specifications and shall, in no event, be less than that necessary to conform to the requirements of any applicable laws, ordinances, and codes.

All materials and equipment to be incorporated into the Work shall be new, unused, and correctly designed. They shall be of standard first grade quality, produced by expert workmen, and be intended for the use for which they are offered. Materials or equipment which, in the opinion of the Engineer, are inferior or of a lower grade than indicated, specified, or required, will not be accepted.

Projects funded by the State Revolving Fund must comply with the requirements of the American Iron and Steel Requirement unless otherwise specified in the Contract Documents and approved by the Engineer.

1.10 MANUFACTURER

The names of proposed manufacturers, manufacturers' representatives, suppliers, and dealers who are to furnish materials, equipment, or other fittings, shall be submitted by the Contractor to the Engineer for review and acceptance. Such acceptance must be obtained before Shop Drawings will be accepted for review. All transactions with the manufacturer and subcontractors shall be through the Contractor.
Any two or more pieces of material or equipment of the same kind, type, or classification and being used for identical types of service, shall be made by the same manufacturer.

Projects funded by the State Revolving Fund must comply with the requirements of the American Iron and Steel Requirement unless otherwise specified in the Contract Documents and approved by the Engineer.

1.11 SAMPLES

The Contractor shall, when required, submit to the Engineer for review and acceptance, typical samples of material and appliances. The samples shall be properly identified by tags and shall be

submitted sufficiently in advance of the time when they are to be incorporated into the Work so that rejections thereof will not cause delay. A letter of transmittal from the Contractor requesting approval shall accompany all such samples.

1.12 EQUIVALENT QUALITY

In the Contract Documents, whenever an article, material, apparatus, equipment, or process is called for by trade name or by name of a patentee, manufacturer, or dealer, or by reference to catalog of a manufacturer or dealer, it shall be understood as intending to mean and specify the article, material, apparatus, equipment, or process designated, or any equal thereto in quality, finish, design, efficiency, and durability, and equally serviceable for the purposes for which it is intended.

Whenever material or equipment is submitted for review as being equal to that specified, the submittal shall include sufficient information and data to demonstrate that the material or equipment conforms to the Contract requirements. The decision as to whether such material or equipment is equal to that specified shall be made by the Engineer.

Upon rejection of any material or equipment submitted as the equivalent of that specifically named in the Contract, the Contractor shall immediately proceed to furnish the designated material or equipment.

Neither the acceptance by the Engineer of alternate material or equipment as being equivalent to that specified, nor the furnishing of the material or equipment specified, shall in any way relieve the Contractor of responsibility for failure of the material or equipment, due to faulty design, material, or workmanship, to perform the functions required of them by the Contract Documents.

1.13 MATERIAL AND EQUIPMENT DELIVERY AND STORAGE

The Contractor shall deliver materials in ample quantities to ensure the most speedy and uninterrupted progress of the work to complete the work within the allotted time. The Contractor shall also coordinate deliveries to avoid delay in, or impediment of, the progress of the work of any related contractor. The Contractor shall provide space for storage of materials and equipment.

Pipe strung along roads and rights-of-way shall be placed in a manner that will not endanger or restrict pedestrian or vehicular traffic. Pipe strings shall not be allowed outside right-of-way limits.

1.14 SERVICE OF MANUFACTURER'S REPRESENTATIVE

The Contract amount shall include but is not limited to the cost of furnishing a competent and experienced representative of the equipment manufacturer who shall assist the Contractor, when required, to install, adjust, test, and place in operation the equipment in conformity with the Contract Documents. After the equipment is placed in operation, the representative shall make all adjustments and tests required by the Engineer to prove that the installed equipment is in proper and satisfactory operating condition. The representative shall instruct personnel as may be designated by the Engineer in the proper operation and maintenance of such equipment.

1.15 CONTAMINANTS CONTAINMENT/DISPOSITION

Prior to the installation of well points for dewatering, the Contractor shall visually inspect the work area for indications of existing ground water monitoring, wells, or metal caps at grade. The Contractor shall review the work area for monitoring wells or abandoned fuel tanks and shall notify the Engineer in writing if any of the above items exist.

During dewatering activities, contractor to test water for contaminants before discharge. If the water is odorous, contaminated, or discolored (excluding tannic acid or iron), the Contractor shall stop the dewatering activities and shall notify the Engineer in writing of such, and request direction.

When work activities encounter or expose any abnormal condition that may indicate the existence of a hazardous or toxic waste, work activities shall stop in the vicinity of the abnormal condition and the Contractor shall notify the Engineer immediately. The presence of tanks or barrels; discolored earth, metal, wood, or groundwater; visible fumes; abnormal odors; excessively hot earth; smoke; or other conditions that appear abnormal, may be signs of hazardous or toxic wastes and shall be treated with extraordinary caution.

Every effort shall be made by the Contractor to minimize the spread of any hazardous or toxic waste into uncontaminated areas.

The Contractor's operations shall not resume until directed in writing by the Engineer.

Disposition of the hazardous or toxic waste will be made in accordance with the requirements and regulations of any City, County, State, or Federal agency having jurisdiction.

1.16 PREVENTION, CONTROL, AND ABATEMENT OF EROSION AND WATER POLLUTION

The Contractor shall be responsible for prevention, control, and abatement of erosion, siltation, and water pollution resulting from construction of the Project until final acceptance of the Project.

The Contractor shall implement all appropriate turbidity management practices at the point of discharge into a storm sewer, gutter, or other conveyance to ensure that state water quality standards are not violated at the point where the storm drain, gutter, or other conveyance discharges into a surface water.

All necessary provisions shall be taken to ensure compliance with the water quality standards of the State of Florida. Attention is called to Chapter 62-302, Florida Administrative Code, and in particular, the requirements that turbidity shall not exceed 29 NTUs above background level. Adequate silt containment procedures and equipment shall be used to control turbidity, at no additional cost to the City.

1.17 MAINTENANCE OF STORM DRAINAGE SYSTEM

The Contractor shall be responsible at all times to maintain the operation of existing stormwater facilities, or, when existing stormwater facilities are removed, to provide equivalent capacity alternate forms of stormwater removal adequate to prevent upstream flooding in excess of existing conditions. This responsibility shall include but is not limited to the installation of temporary

connections, bypass pumping, or other temporary means necessary until the new drainage system is fully operational.

1.18 SPILL OR DISCHARGE OF WASTEWATER OR RECLAIMED WATER

The discharge of wastewater or effluent (reclaimed water) into waters of the State and/or into canals, ditches, and ponds that are connected to waters of the State is prohibited. Any spill or discharge of wastewater or reclaimed water shall be immediately reported to the Engineer, the City's Project Manager, and the City's Emergency Dispatch Center. Contact information will be provided for all necessary City personnel and the Engineer at the Preconstruction Conference. In the event of a spill or discharge, the Contractor shall immediately control, contain, and stop the spill or discharge and shall repair any damage to the City's facilities.

The Contractor shall be responsible for any penalties and costs charged to the City by the FDEP and for all costs incurred by the City as a result of the Contractor's actions or as a result of the Contractor's negligence. The fines, and anticipated costs, which may be incurred by the City as a result of the Contractor's actions or negligence, shall be paid to the City within 30 days, or the costs incurred will be deducted from the total Contract amount.

1.19 SEQUENCE OF OPERATION

1.19.01 PIPELINE WORK

It is the intent of the City that all pipeline work associated with the Project be installed to completion in a timely and orderly manner to minimize inconvenience to the Public. Pipe and pipe materials shall not be stored or strung in residential areas more than 3 weeks in advance of pipe installation unless otherwise approved by the Engineer.

The Contractor shall include in the Project Schedule a Sequence of Operations including, but not limited to, the following components:

A. Pipe and pipe material storage
B. Bypass Pumping
C. Backfilling
D. Testing and repairs
E. Disinfection
F. Surface Restoration and Cleanup

1.19.02 PUMP/LIFT STATION WORK

It is essential that any Project work conducted at Pump/Lift Station sites be sequenced to minimize obstruction of normal daily operations of the Pump/Lift Station.

The Contractor shall include in the Project Schedule a Sequence of Operations including, but not limited to, the following components:

A. Equipment and material storage
B. Bypass Pumping

C. Testing and repairs
D. Surface Restoration and Cleanup

1.19.03 MISCELLANEOUS

Utility Companies may be present on the work site adjusting their facilities and installing new facilities. The Contractor's work shall be scheduled in such a manner as to minimize conflicts with various utility companies.

The Contractor shall clean up the site for each phase of work in accordance with the Contract Documents and confine work and personnel to designated areas in accordance with the Specifications. Before proceeding to a subsequent phase of work, unless otherwise approved by the Engineer.

1.19.04 NO TIME EXTENSION

If the Engineer orders construction, or a phase of construction, to be stopped due to the Contractor's neglect to adhere to the Sequence of Operations as outlined herein, the Stop Work Order shall not constitute a basis for extension of time.

1.20 WORK IN STREETS AND HIGHWAYS

All work within streets and highways shall be subject to the regulations and requirements of the City of St. Pete Beach, FDOT, and all other agencies with jurisdiction of the streets and highways in the work limits.

Methods and materials of construction used in restoration within such streets and highways shall conform to the requirements, inspection, and acceptance of the duly authorized representatives of the appropriate agency having jurisdiction. Restoration Work shall include but not be limited to: removal and replacement of pavement, sidewalk, curb, and gutter; replacement of storm sewer facilities; excavation and backfilling; and storage of materials and equipment.

1.21 WORK IN PRIVATE PROPERTY

The Contractor shall not trespass upon or in any way disturb private property without first obtaining written permission from the City to do so. In the event that, in the opinion of the Contractor, obtaining a temporary construction easement outside the limits of the right-of-way, of City-owned property, or of the easement(s) obtained by the City is necessary or desirable, it shall be the sole responsibility of the Contractor to obtain such easement from the owner of the property. If such easement is obtained by the Contractor, it shall contain provision to hold the City harmless from any operations of the Contractor within the easement limits. The Contractor shall not conduct construction operations on private property outside the limits of the right-of-way, of City-owned property, or of the easement(s) obtained by the City unless a copy of the Temporary Construction Easement Agreement is filed with the Engineer. It shall be the Contractor's responsibility to work equipment around poles, trees, or other obstructions and to do so at his own expense. The Contractor shall ensure all employees have a badge or visible identification during any time that they on the project site or within private property. This identification must be worn so that it is readily recognized and readable to the public.

Upon completion of work in easements, the Contractor shall, at no additional expense, restore the property, including all fences or other structures disturbed by his operations, to the full satisfaction of the City and shall obtain from the City a written release stating that restoration has been satisfactorily made. A copy of the completed written release shall be furnished to the City prior to payment. All items within the street right-of-way or sewer easement shall be removed, or removed and replaced, or restored as directed by the City.

1.22 PERMITS

Construction projects performed for the City will require licenses and permits in the same manner as private construction projects within the City.

The Contractor shall secure, at his expense, all licenses and permits, and shall comply with all applicable laws, regulations, and codes as required by the State of Florida and/or the City of St. Pete Beach whether performed by the Contractor or by others. The Contractor must be registered to complete such work within Pinellas County.

1.23 FIELD OFFICE AND APPURTENANT STRUCTURES

No field office or appurtenant structures by the Contractor, any subcontractor, or any material supplier, will be allowed on the Project site.

Space on City property or rights-of-way proposed to be used for storage and a field office for the Contractor shall be approved by the Engineer prior to installation providing such uses will not interfere in any manner with the construction of the work or the operation of existing facilities.

1.24 CONTRACTOR'S SIGN

No sign by the Contractor, any subcontractor, or any material supplier, will be allowed on the Project site.

1.25 MOBILIZATION

Mobilization shall include but is not limited to all preparatory work and operations necessary to begin the Project, including moving of personnel, equipment, traffic control, and all else necessary to commence work. The cost of bonds, insurance, shop drawings, and preconstruction expenses shall also be included.

If a separate Pay Item is included for mobilization, payment will be as specified for that Pay Item. If no Pay Item is included, costs for mobilization shall be included with the costs for the major Work items included in the Proposal.

1.26 WATER PURCHASE

Water used in connection with this Project must be coordinated with Pinellas County. Reclaimed water used in connection with this Project must be coordinated with the City.

1.27 TRAFFIC CONTROL

The Contractor shall provide required traffic controls under City observation. The Contractor shall notify the City's Project Manager a minimum of 2 working days prior to any construction affecting traffic flow. A Maintenance of Traffic plan drawing shall be submitted for review by the Engineer prior to each lane closure or opening during construction. All traffic control devices utilized during construction shall be provided by the Contractor and meet the requirements set forth in the latest revision of U.S. Department of Transportation Federal Highway Administration's "Manual on Uniform Traffic Control Devices for Streets and Highways" and the Florida State Department of Transportation's "Standard Plans for Road and Bridge Construction." Failure or refusal, on the part of the Contractor, to install, maintain and/or position traffic control devices promptly, fully, and in an acceptable manner, shall be sufficient cause for the City, after 24-hour notice, to perform the traffic control with its own organization, or to contract with any other individual, firm, or corporation to perform the required traffic control. All costs and expenses incurred thereby shall be charged against the defaulting Contractor, and the amount thereof deducted from any money due, or which may become due him, or shall be charged against the Contract Bond. Any Work performed as described by this paragraph, shall not relieve the Contractor in any way of his responsibility for the Work performed by him.

Traffic shall be performed so that vehicular traffic shall be maintained on with at least one 10-foot wide lane in each direction at all times. An acceptable detour route shall be developed by the Contractor to redirect traffic when and where necessary, with the approval of the Transportation Special Events Division. Temporary lanes shall be constructed with a minimum 1-inch thick asphaltic concrete surface over a 6-inch thick limerock base compacted to 98% of the maximum density in accordance with AASHTO T-180.

Failure of the Contractor to comply with any of the above traffic control requirements may result in issuance of a stop work order until the violation is corrected.

All maintenance of traffic in the FDOT right-of-way shall be in accordance with FDOT requirements.

1.28 TREE PROTECTION

Particular care shall be taken by the Contractor to protect trees during construction by erecting approved barricades to prevent unnecessary damage to trunk and roots during construction. Such barriers shall protect the area within the dripline.

The Contractor shall prune all branches that interfere with construction in accordance with American Forestry Association Standards. Roots over 2-inch diameter shall be preserved wherever possible. If root pruning is required, roots shall be cut cleanly.

Temporary soil deposits, concrete block, concrete wash, or solvents shall not be placed within the dripline. The grade within the dripline shall be preserved. If adjacent grade is altered, protective measures such as those described in the Florida State Division of Forestry "Tree Protection Manual for Builders and Developers" shall be constructed to protect the tree(s) from deleterious effects of the grade change.

1.29 TREE REMOVAL AND REPLACEMENT

The Contractor shall obtain any necessary tree removal permit, shall furnish and replace trees as required, and shall perform this Work in a manner conforming to all applicable provisions of said regulations or permit.

The cost of tree removal and obtaining the tree removal permits shall be included in the cost of the appropriate associated Contract Pay Item under which the Work is to be performed. The Contractor shall remove trees as required and approved by the Engineer whether or not said trees are shown on the Contract Drawings. Trees that must be removed, except for Australian pine, Brazilian pepper, punk, and other exempt species, shall be replaced as directed. Replacement trees shall be of native species at least 8-feet tall and at least 3-inch caliper diameter.

1.30 UTILITIES

Prior to construction, the Contractor shall familiarize himself with the location of all existing utilities and facilities within the Project Site. The Contractor must take the necessary precautions for the protection of any utility encountered on the Project or the restoration of any utility damaged during the work.

If excavation is required, The Contractor shall notify, at least 48 hours before breaking ground, all public or private service corporations having wire, poles, pipes, conduit, manholes, or other structures that may be affected by this operation, including all structures which are affected and not shown on these plans. Utility companies shall be contacted by calling the utility notification center "Sunshine 811" at 1-800-432-4770. Owners which are not members of the state's One Call service must be called directly. The City will furnish to the Contractor the available records of City utilities. The Contractor shall locate and mark all City utilities for his reference and for use by utility companies. The Contractor shall act as the City's agent for locating and marking City underground utilities within the Project limits, in accordance with the Florida Underground Facilities Damage Prevention and Safety Act (FS 556).

In all cases where existing utility lines may be interfered with by the work, the Contractor shall give a minimum of 48 hours' notice (excluding Saturdays, Sundays, and legal holidays) to the owners of such utilities to permit them to relocate the lines prior to construction. Existing utilities have been shown on the Contract Drawings insofar as information is reasonably available. However, it will be the Contractor's responsibility to preserve all existing utilities whether shown on the Contract Drawings or not. All maintenance, repair, and replacement of existing utilities shall be in accordance with the rules and regulations of the various utility companies having jurisdiction. All existing storm sewers, driveway drains, surface drainpipes and other property, removed or damaged during construction shall be repaired and reconnected by the Contractor as directed by the City at no additional cost to the City.

1.31 NEIGHBORHOOD NOTIFICATION

Not less than 7 days prior to the commencement of Work in the right-of-way, the Contractor shall notify all residents and businesses along the construction route with a printed door hanger notice indicating the scheduled date of construction, the type of construction, and the Contractor's and Superintendent's contact information. The door hanger text and a list of residents and businesses to

which the notification has been delivered shall be compiled and submitted to the Engineer prior to the Contractor commencing Work.

1.32 SHOP, FIELD, AND LABORATORY TESTING

The Engineer may require testing by certified personnel of certain materials to be incorporated in the Work, such as: soils density, pavement, concrete pipe and appurtenances, and welds.

In the event any such testing is required by the Engineer, a detailed description will be found in these Technical Specifications concerned with the specific item of Work.

Where reference is made for design mixes, tests of materials, or work performed, or where in the opinion of the Engineer, tests are required to ascertain compliance with the Specifications, the Contractor shall have such tests made by an approved testing laboratory. No additional payment will be made for these tests.

1.33 SALVAGED MATERIALS

The Contractor shall not proceed with demolition of existing materials or equipment without review and acceptance from the Engineer for the method of disposal.

All materials which are not returned to the City yard shall be disposed in an approved disposal site. The Engineer may request confirmation of the site's approval for disposal of the specific materials.

Salvaged materials shall be loaded on Contractor trucks and returned to the Public Services yard at 7581 Boca Ciega Drive, St. Pete Beach, Florida. The City will designate the specific location at the yard for placement of salvaged materials by the Contractor.

The following materials shall be removed and returned by the Contractor: pumps and pump rails, and all other materials as directed by the Engineer.

END OF SECTION

SECTION 2 - PAY ITEM DESCRIPTIONS

2.01 SCOPE

The scope of this section of the Contract Documents is to further define the items included in each Pay Item in the Bid Form section of the Contract Documents. Payment will be made based on the specified items included in the description in this section for each Pay Item.

All contract prices included in the Bid Form section will be full compensation for all shop drawings, working drawings, labor, materials, tools, equipment and incidentals necessary to complete the construction as shown on the Contract Drawings and/or as specified in the Contract Documents to be performed under this Contract. Actual quantities of each item bid on a unit price basis will be determined upon completion of the construction in the manner set up for each item in this section of the Specifications. Payment for all items listed in the Bid Form will constitute full compensation for all work shown and/or specified to be performed under this Contract.

2.02 ESTIMATED QUANTITIES

The quantities shown are approximate and are given only as a basis of calculation upon which the award of the Contract is to be made. The City does not assume any responsibility for the final quantities, nor shall the Contractor claim misunderstanding because of such estimate of quantities. Final payment will be made only for satisfactorily completed quantity of each item.

2.03 WORK OUTSIDE AUTHORIZED LIMITS

No payment will be made for work constructed outside the authorized limits of work.

2.04 MEASUREMENT STANDARDS

Unless otherwise specified for the particular items involved, all measurements of distance shall be taken horizontally or vertically.

2.05 AREA MEASUREMENTS

In the measurement of items to be paid for on the basis of area of finished work, the lengths and/or widths to be used in the calculations shall be the final dimensions measured along the surface of the completed work within the neat lines shown or designated.

2.06 LUMP SUM ITEMS

Where payment for items is shown to be paid for on a lump sum basis, no separate payment will be made for any item of work required to complete the lump sum items. Lump sum contracts shall be complete, tested and fully operable prior to request for final payment. Contractor may be required to provide a break-down of the lump sum totals.

2.07 PAY ITEM DESCRIPTIONS

Separate payment will be made for the items of work described herein and listed on the Bid Form. Any related work not specifically listed but required for satisfactory completion of the work shall be considered to be included in the scope of the appropriate listed work items.

No separate payment will be made for the incidental items not included in the Pay Item descriptions. The cost to complete such work shall be included in the applicable Pay Item unit cost. Final payments shall not be requested by the Contractor or made by the City until as-built (record) drawings have been submitted and approved by the City. Incidental items include, but are not limited to:

1. Shop Drawings, Working Drawings.
2. Clearing, grubbing and grading except as hereinafter specified.
3. Trench excavation, including necessary pavement removal and rock removal, except as otherwise specified.
4. Dewatering and disposal of surplus water.
5. Structural fill, backfill, and grading.
6. Replacement of unpaved roadways, and shrubbery plots.
7. Foundation and borrow materials, except as hereinafter specified.
8. Testing and placing system in operation.
9. Any material and equipment required to be installed and utilized for the tests.
10. Pipe, structures, pavement replacement, driveways and/or appurtenances included within the limits of lump sum work, unless otherwise shown.
11. Maintaining the existing quality of service during construction.
12. Appurtenant work as required for a complete and operable system.
13. Seeding and hydro mulching.
14. As-built Record Drawings, clean up, and miscellaneous work.

WASTEWATER SYSTEM MANHOLE REHABILITATION

PAY ITEM NO. 1 – MOBILIZATION

The work specified in this item consists of the preparatory work and operations in mobilizing for beginning work on the project This item includes, but is not limited to, those operations necessary for the movement of personnel, equipment, supplies and incidentals to and from the project site as a single occurrence per work site, and for the establishment of Subcontractor's temporary offices, buildings, safety equipment, first aid supplies, sanitary and other facilities, as required by these Specifications, special provisions, and State and local laws and regulations. The costs of bonds, permits and any required insurance, and any other preconstruction expense necessary for the start of the work, excluding the cost of construction materials, shall also be included in this item. Labor and equipment travel time from/to the site is included in this pay item.

The Contractor will be required to respond to the request of the Engineer or designated representative within ten (10) calendar days of notification. The Scope of Work will be developed by Project manager and will be executed in accordance with the terms and conditions of this contract.

The quantity of mobilization to be paid for under this item shall be measured as one unit each (EA) per job assignment. One (1) mobilization will be allowed for each job assignment, project, or work order no matter how many times the equipment must be relocated by loading, transporting, and unloading, or under its own power to complete the job assignment or project. Payment for mobilization shall not exceed 10 percent (10%) of the total Contract cost unless the Contractor can prove to the City that his actual mobilization cost exceeds 10 percent (10%).

PAY ITEMS NO. 2 – 14 – MAINTENANCE OF TRAFFIC

This work consists of maintaining traffic within the limits of the project for the duration of the construction period, including any temporary suspensions of the work. All Maintenance of Traffic (MOT) shall comply with FDOT Standard Plans Index 102 Series for Maintenance of Traffic. These pay items shall include labor and equipment to furnishing, installing and maintaining of traffic control and safety devices during construction; the construction and maintenance of any necessary detour facilities; providing necessary facilities for access to residences, businesses, pedestrian, schools, etc., control of dust and any other special requirements for safe and expeditious movement of traffic as may be called for on the plans. MOT shall include all of such facilities, devices and operations as are required for the safety and convenience of the public, as well as for minimizing public nuisance. The Contractor, however, shall not obstruct nor create a hazard to any traffic during the performance of the work and shall be responsible for repair of any damage to existing pavement or facilities caused by his operations. Traffic Control Devices include all types of barricades, arrow boards, signs, temporary pavement markers, lights, concrete barriers and permanent striping. All travel, equipment, labor overhead or any other associated expenses in transportation and setting out the MOT will be included in the price. All MOT line items for Multi-Lane work shall include all costs for items associated with the appropriate FDOT

Index (no separate payment for signs, barricades, etc. included with index will be allowed).

Maintenance of Traffic (MOT) shall be measured as units of work, each/day (EA/DY), hourly (HR) or by linear foot (LF) accordingly completed and priced on an individual project basis. The lump sum price for each assignment will be based on the specific MOT requirements for the assignment. The Contractor shall provide the Engineer with a proposal for the MOT that includes a breakdown of the costs, which are included in the lump sum price, and receive written acceptance from the Engineer prior to the installation of the MOT.

PAY ITEM	DESCRIPTION	UNITS
2	Flagmen (Per-Flagmen)	HR
3	Multi Lane, Lane Closures (FDOT Index No. 613)	EA/DY
4	Multi Lane, Intersection (FDOT Index No. 615)	EA/DY
5	Arrow Boards - 5' Minimum Horizontal Size	EA/DY
6	Variable Message Board	EA/DY
7	Concrete Barrier (FDOT Index No. 100)	EA/DY
8	Low Profile Barrier (FDOT Index No. 120)	EA/DY
9	Signs in Work Zones	EA/DY
10	6" Solid line Thermo Plastic - Permanent	LF
11	24" Stop Bar, Solid, Thermo Plastic, Perm.	LF
12	6" Skip line (6'-10' Skip) Thermo Plastic-Perm.	LF
13	Barricades Type III, with Warning Lights	EA/DY
14	Barricades Type I or II, with Warning Lights	EA/DY

PAY ITEM NO. 15 – REPAIR MANHOLE BENCH AND CHANNEL

Payment will be made per each manhole regardless of manhole diameter or depth. Payment shall include all materials, labor, equipment, and supplies necessary for the Repair of Manhole Bench and Channel, and specifically includes, but is not limited to, placement of temporary plugs, removal and disposal of all sand, rubble, deposits, and other accumulated debris, removal of deficient, deteriorated or unsound bench and channel materials, minor infiltration elimination in walls and base beneath the bench and channel, repair or replacement of bench and channels, cleaning, disposal of debris, restoration, and all other appurtenant work.

Separate Pay Items are provided for Traffic Control, Pump-Around Pumping Operation, and "Severe" Manhole Infiltration Elimination used in conjunction with this Work.

PAY ITEMS NO. 16 & 17 – REPAIR CHIMNEY, ADJUST/REPLACE MH CASTING

Payment will be made per each manhole regardless of manhole casting diameter or depth. Payment shall include all materials, labor, equipment, and supplies necessary for repair of chimney, and adjustment or replacement of manhole casting, and specifically includes, but is not limited to, locating and uncovering manhole, excavation, saw cutting, removal and disposal of existing asphalt pavement as needed, removal of existing manhole frame and cover casting, removal of deficient, deteriorated or unsound chimney materials, minor infiltration elimination, repair or replacement of chimney, reinstalling the existing manhole casting, delivering and

installing a new manhole casting of the same nominal size as the existing casting, backfill, restoration of surface to match existing conditions, cleaning, disposal of debris, and all other appurtenant work. Compensation for the Contractor to furnish new manhole castings will be made under separate Pay Items. The City may elect to furnish new manhole castings for the Contractor to install. The cost of City furnished manhole castings will be deducted from the Contract Price.

PAY ITEM	DESCRIPTION	UNITS
16	Repair Chimney, Asjust/Replace MH Casting - Unpaved	EA
17	Repair Chimney, Asjust/Replace MH Casting - Asphalt Pavement	EA

PAY ITEM NO. 18 – REBUILD CORBEL/CHIMNEY FOR TYPE B MANHOLE CASTING

Payment will be made per each manhole regardless of manhole casting diameter or depth. Payment shall include all materials, labor, equipment, and supplies necessary to rebuild and enlarge corbel/chimney for Type B manhole casting, and specifically includes, but is not limited to, additional pavement removal and excavation, removal of chimney/corbel materials and rebuilding chimney to match larger Type B manhole casting diameter, additional backfill, additional surface restoration, disposal of additional debris, and all other appurtenant work. This Pay Item is applicable only in conjunction with, and in addition to, the Work as listed under Pay Items 16 and 17.

PAY ITEMS NO. 19 & 20 – FURNISH MANHOLE CASTING

Payment will be made per each manhole casting for the applicable casting types listed in the Proposal. Payment shall include all materials, labor, equipment, and supplies necessary to furnish Type B manhole castings (nominal 34-inch diameter) or Type E manhole castings (nominal 23-inch diameter), and specifically includes, but is not limited to, purchasing and delivering the manhole casting materials to designated Work locations for use to replace existing manhole castings.

PAY ITEM	DESCRIPTION	UNITS
19	Furnish Manhole Casting – Type B	EA
20	Furnish Manhole Casting – Type E	EA

PAY ITEM NO. 21 – SEVERE MANHOLE INFILTRATION ELIMINATION

Payment will be made per each manhole regardless of the manhole diameter, depth, or the number of infiltration points sealed in each manhole. Payment shall include all materials, labor, equipment, and supplies necessary, and specifically includes, but is not limited to, surface preparation, drilling of grout holes into or through the manhole wall and floor, grout pipe penetrations, grout injection, removal of grout pipe and sealing grout holes, testing, restoration, and all other appurtenant work as specified.

PAY ITEM NO. 22 – CHEMICAL SEALING - GROUT

Payment will be made per gallon. This Pay item is applicable only in conjunction with Pay Item No. 21. Payment shall include all materials, equipment and labor for chemically sealing excessive infiltration defects for "Severe" Manhole Infiltration Elimination prior to manhole repairs.

PAY ITEMS NO. 23 & 24 – INTERNAL CHIMNEY SEALANT

Payment will be made per each manhole for the applicable manhole casting types listed in the Bid Form. Payment shall include all materials, labor, equipment, and supplies necessary for the installation of the internal chimney sealant for Type B manhole castings (nominal 34-inch diameter) or Type E manhole castings (nominal 23-inch diameter), and specifically includes, but is not limited to, cleaning, surface preparation, "Minor" infiltration elimination, applying the chimney sealant, testing, restoration, and all other appurtenant work.

PAY ITEM	DESCRIPTION	UNITS
23	Internal Chimney Sealant – Type B Manhole Casting	EA
24	Internal Chimney Sealant – Type E Manhole Casting	EA

PAY ITEM NO. 25 – ADDITIONAL ACCESS COST FOR MANHOLE COATING

Payment will be made per each Work location. A Work location shall be limited to the additional access costs for manhole coating Work to be performed on single or multiple proximate access structures or manholes regardless of the number of manholes coated. Measurement will be for a manhole coating installation where the manhole(s) is not readily accessible by standard equipment, e.g., when located in rear easements. Payment shall include all additional labor, equipment, materials and supplies to complete the manhole coating installation in locations with limited access.

PAY ITEMS NO. 26 – 33 – BYPASS PUMPING SETUP & OPERATION

This item provides for set up and operation of by-pass sewage pumping equipment and temporary piping as required and as described in the Standard Technical Specifications. This Pay Item is applicable on projects or repairs that have high flow or require an over night by pass operation.

The quantity to be measured for payment under this Pay Item will be the actual number of by-pass pumping set ups and operations, per part of day, required by the Engineer in the work. The minimum measurement for this pay item is eight (8) hours or 0.333 days and is measured from the time that the sewage is actually by-passed. This eight (8) hour minimum (0.333 days) includes full compensation for set up and operation for up to the first eight (8) hour period. Additional time will be in tenths of the day or twenty-four (24) hour period. The quantities determined shall be paid per day (DAY) or portion of day of by-pass pumping set up and operation.

PAY ITEM	DESCRIPTION	UNITS
26	Bypass Pumping, Set up, 6" - 10" diameter	EA
27	Bypass Pumping, Set up, 12" - 14" diameter	EA

28	Bypass Pumping, Set up, 15" - 21" diameter	EA
29	Bypass Pumping, Set up, 24" diameter	EA
30	Bypass Pumping, Operation, 6" - 10" diameter	DAY
31	Bypass Pumping, Operation, 12" - 14" diameter	DAY
32	Bypass Pumping, Operation, 15" - 21" diameter	DAY
33	Bypass Pumping, Operation, 24" diameter	DAY

PAY ITEMS NO. 34-36 – PURE CALCIUM ALUMINATE CEMENTITIOUS MH COATING, INITIAL

Payment will be made per each manhole for the applicable manhole diameters listed below, regardless of the overall manhole depth. Measurement will be from the bottom of the manhole to at least 3 vertical feet above the lowest pipe invert, or to the bottom of the cover frame if less than 3 vertical feet, and will be the average of minimum/maximum manhole diameter measured 12-inches above outgoing pipe rounded to the nearest foot. Payment shall include all materials, labor, equipment, and supplies necessary for installation, and specifically includes, but is not limited to, temporary plugs, cleaning, removal and disposal of all sand, rubble, deposits, and other accumulated debris, removal of steps, surface preparation, "Minor" infiltration elimination, sealing of all manhole wall penetrations, coating the lower 3 vertical feet of the manhole (includes invert, channel, bench, piping, CIPP liner interface, wall, and cone/corbel/chimney as applicable), testing, restoration, and all other appurtenant work as specified.

Separate Pay Items are provided for Maintenance of Traffic, Bypass Pumping Operation, and "Severe" Manhole Infiltration Elimination used in conjunction with this Work.

PAY ITEM	DESCRIPTION	UNITS
34	Pure Calcium Aluminate Cementitious MH Coating – 48” Diameter, Initial	EA
35	Pure Calcium Aluminate Cementitious MH Coating – 60” Diameter, Initial	EA
36	Pure Calcium Aluminate Cementitious MH Coating – 72” Diameter, Initial	EA

PAY ITEMS NO. 37-39 – PURE CALCIUM ALUMINATE CEMENTITIOUS MH COATING, ADDITIONAL

Payment will be made per vertical foot for the applicable manhole diameters listed below, regardless of the overall manhole depth. Measurement will be from the lowest pipe invert to the bottom of the cover frame minus the 3 vertical feet paid for under Pay Items 34 through 36. This Pay Item is applicable only in conjunction with, and includes the same Work as listed in Pay Items 34 through 36.

PAY ITEM	DESCRIPTION	UNITS
37	Pure Calcium Aluminate Cementitious MH Coating – 48” Diameter, Additional	VF
38	Pure Calcium Aluminate Cementitious MH Coating –	VF

	60” Diameter, Additional	
39	Pure Calcium Aluminate Cementitious MH Coating – 72” Diameter, Additional	VF

PAY ITEMS NO. 40-42 – REINFORCED POLYMER MH COATING, INITIAL

Payment will be made per each manhole for the applicable manhole diameters listed below, regardless of the overall manhole depth. Measurement will be from the bottom of the manhole to at least 3 vertical feet above the lowest pipe invert, or to the bottom of the cover frame if less than 3 vertical feet, and will be the average of minimum/maximum manhole diameter measured 12-inches above outgoing pipe rounded to the nearest foot. Payment shall include all materials, labor, equipment, and supplies necessary for installation, and specifically includes, but is not limited to, temporary plugs, cleaning, removal and disposal of all sand, rubble, deposits, and other accumulated debris, removal of steps, surface preparation, "Minor" infiltration elimination, sealing of all manhole wall penetrations, coating the lower 3 vertical feet of the manhole (includes invert, channel, bench, piping, CIPP liner interface, wall, and cone/corbel/chimney as applicable), testing, restoration, and all other appurtenant work as specified.

Separate Pay Items are provided for Maintenance of Traffic, Bypass Pumping Operation, and "Severe" Manhole Infiltration Elimination used in conjunction with this Work.

PAY ITEM	DESCRIPTION	UNITS
40	Reinforced Polymer MH Coating – 48” Diameter, Initial	EA
41	Reinforced Polymer MH Coating – 60” Diameter, Initial	EA
42	Reinforced Polymer MH Coating – 72” Diameter, Initial	EA

PAY ITEMS NO. 43-45 – REINFORCED POLYMER MH COATING, ADDITIONAL

Payment will be made per vertical foot for the applicable manhole diameters listed below, regardless of the overall manhole depth. Measurement will be from the lowest pipe invert to the bottom of the cover frame minus the 3 vertical feet paid for under Pay Items 40 through 42. This Pay Item is applicable only in conjunction with, and includes the same Work as listed in Pay Items 40 through 42.

PAY ITEM	DESCRIPTION	UNITS
43	Polymer MH Coating – 48” Diameter, Additional	VF
44	Polymer MH Coating – 60” Diameter, Additional	VF
45	Polymer MH Coating – 72” Diameter, Additional	VF

PAY ITEMS NO. 46-48 – CONCRETE CURB REPLACEMENT

Payment for all work included in this Pay Item will be made at the applicable Contract unit price bid per linear foot for removal of existing curbing and for furnishing and placing curb and gutter as shown on the Contract Drawings and listed on the Bid Form. Measurement will be per actual number of linear feet of curbing installed. Payment shall represent full compensation for removal of existing curb and all labor, material and equipment for compacting subgrade, forming,

furnishing, placing the concrete, and finishing as specified and all incidentals necessary for completion of this Pay Item.

PAY ITEM	DESCRIPTION	UNITS
46	Concrete Curb Replacement – Type D	LF
47	Concrete Curb Replacement – Type F	LF
48	Concrete Curb Replacement – Miami Curb	LF

PAY ITEMS NO. 49 & 50 – CONCRETE SIDEWALK REPLACEMENT

Payment will be made per square yard for the applicable sidewalk thickness listed below, regardless of the overall length. Measurement will be for complete sections. Payment shall include all materials, labor, equipment, and supplies necessary for concrete sidewalk replacement, and specifically includes, but is not limited to, excavation, saw cutting and removal of existing sidewalk, installation of replacement sidewalk to match cross section and slope of adjacent sidewalk, expansion joint material, contraction joints, backfill, restoration, cleaning, disposal of debris, and all other appurtenant work as specified.

PAY ITEM	DESCRIPTION	UNITS
49	Concrete Sidewalk Replacement – 4” Thick	SY
50	Concrete Sidewalk Replacement – 6” Thick	SY

PAY ITEMS NO. 51 & 52 – CONCRETE DRIVEWAY REPLACEMENT

Payment will be made per square yard for the applicable driveway thickness listed below, regardless of the overall length. Measurement will be for complete section. Payment shall include all materials, labor, equipment, and supplies necessary for concrete driveway replacement, and specifically includes, but is not limited to, excavation, saw cutting and removal of existing driveway, installation of replacement driveway to match cross section and slope of existing driveway, expansion joint material, contraction joints, backfill, restoration, cleaning, disposal of debris, and all other appurtenant work as specified.

PAY ITEM	DESCRIPTION	UNITS
51	Concrete Driveway Replacement – 4” Thick	SY
52	Concrete Driveway Replacement – 6” Thick	SY

PAY ITEM NO. 53 – INFLOW DISH

Payment for all work included under this Pay Item will be made at the Contract unit price bid for furnishing and installing each inflow dish as shown on the Contract Drawings and listed on the Bid Form. Payment will be made for each inflow dish installed and will represent full compensation for all labor, material, excavation, including rock, bedding, backfill, compaction, sheeting, testing and equipment required to complete this Pay Item. Included in this Pay Item, but not limited to, are all 304 stainless steel inflow dishes, as shown in the Contract Drawings. Submittal shall include a complete bill of materials for all equipment, showing dimensions and materials of construction of

all components, verifying that product will meet the standards specified in the Technical Specifications and Contract Drawings.

WASTEWATER SYSTEM PIPE LINING

PAY ITEM NO. 1 – MOBILIZATION

The work specified in this item consists of the preparatory work and operations in mobilizing for beginning work on the project This item includes, but is not limited to, those operations necessary for the movement of personnel, equipment, supplies and incidentals to and from the project site as a single occurrence per work site, and for the establishment of Subcontractor's temporary offices, buildings, safety equipment, first aid supplies, sanitary and other facilities, as required by these Specifications, special provisions, and State and local laws and regulations. The costs of bonds, permits and any required insurance, and any other preconstruction expense necessary for the start of the work, excluding the cost of construction materials, shall also be included in this item. Labor and equipment travel time from/to the site is included in this pay item.

The Contractor will be required to respond to the request of the Engineer, or designated representative within ten (10) calendar days of notification. The Scope of Work will be developed by Project manager and will be executed in accordance with the terms and conditions of this contract.

The quantity of mobilization to be paid for under this item shall be measured as one unit each (EA) per job assignment. One (1) mobilization will be allowed for each job assignment, project, or work order no matter how many times the equipment must be relocated by loading, transporting and unloading, or under its own power to complete the job assignment or project. Payment for mobilization shall not exceed 10 percent (10%) of the total Contract cost unless the Contractor can prove to the City that his actual mobilization cost exceeds 10 percent (10%).

PAY ITEMS NO. 2 – 14 – MAINTENANCE OF TRAFFIC

This work consists of maintaining traffic within the limits of the project for the duration of the construction period, including any temporary suspensions of the work. All Maintenance of Traffic (MOT) shall comply with FDOT Standard Plans Index 102 Series for Maintenance of Traffic. These pay items shall include labor and equipment to furnishing, installing and maintaining of traffic control and safety devices during construction; the construction and maintenance of any necessary detour facilities; providing necessary facilities for access to residences, businesses, pedestrian, schools, etc., control of dust and any other special requirements for safe and expeditious movement of traffic as may be called for on the plans. MOT shall include all of such facilities, devices and operations as are required for the safety and convenience of the public, as well as for minimizing public nuisance. The Contractor, however, shall not obstruct nor create a hazard to any traffic during the performance of the work and shall be responsible for repair of any damage to existing pavement or facilities caused by his operations. Traffic Control Devices include all types of barricades, arrow boards, signs, temporary pavement markers, lights, concrete barriers and permanent striping. All travel, equipment, labor overhead or any other associated expenses in transportation and setting out the MOT will be included in the price. All MOT line items for Multi-Lane work shall include all costs for items associated with the appropriate FDOT Index (no separate payment for signs, barricades, etc. included with index will be allowed).

Maintenance of Traffic (MOT) shall be measured as units of work, each/day (EA/DY), hourly (HR) or by linear foot (LF) accordingly completed and priced on an individual project basis. The lump sum price for each assignment will be based on the specific MOT requirements for the assignment. The Contractor shall provide the Engineer with a proposal for the MOT that includes a breakdown of the costs, which are included in the lump sum price, and receive written acceptance from the Engineer prior to the installation of the MOT.

PAY ITEM	DESCRIPTION	UNITS
2	Flagmen (Per-Flagmen)	HR
3	Multi Lane, Lane Closures (FDOT Index No. 613)	EA/DY
4	Multi Lane, Intersection (FDOT Index No. 615)	EA/DY
5	Arrow Boards - 5' Minimum Horizontal Size	EA/DY
6	Variable Message Board	EA/DY
7	Concrete Barrier (FDOT Index No. 100)	EA/DY
8	Low Profile Barrier (FDOT Index No. 120)	EA/DY
9	Signs in Work Zones	EA/DY
10	6" Solid line Thermo Plastic - Permanent	LF
11	24" Stop Bar, Solid, Thermo Plastic, Perm.	LF
12	6" Skip line (6'-10' Skip) Thermo Plastic-Perm.	LF
13	Barricades Type III, with Warning Lights	EA/DY
14	Barricades Type I or II, with Warning Lights	EA/DY

PAY ITEMS NO. 15 – 22 – CIPP MAIN LINER

Payment will be made per linear foot for the applicable pipe diameters and minimum thicknesses listed below, regardless of the depth or overall length. Measurement will be from the upstream manhole to the downstream manhole centerlines. Payment shall include all materials, labor, equipment, and supplies necessary for the CIPP Main Liner installation, and specifically includes, but is not limited to, pre-rehabilitation CCTV inspection, liner sampling and storage of samples for testing, sealing liner connections at manholes, matching existing manhole lining to the CIPP liner, matching existing flow channels and surfacing to the liner to minimize turbulence, cleaning, removal and disposal of all sand, rubble, deposits, and other accumulated debris after liner installation, post-rehabilitation CCTV inspection video and log, restoration, and all other appurtenant work as specified.

PAY ITEM	DESCRIPTION	UNITS
15	CIPP Main Liner 6” Diameter – 6.0 mm Thickness	LF
16	CIPP Main Liner 8” Diameter – 6.0 mm Thickness	LF
17	CIPP Main Liner 10” Diameter – 6.0 mm Thickness	LF
18	CIPP Main Liner 12” Diameter – 6.0 mm Thickness	LF
19	CIPP Main Liner 15” Diameter – 7.5 mm Thickness	LF
20	CIPP Main Liner 18” Diameter – 9.0 mm Thickness	LF
21	CIPP Main Liner 21” Diameter – 9.0 mm Thickness	LF
22	CIPP Main Liner 24” Diameter – 10.5 mm Thickness	LF

PAY ITEMS NO. 23 – 30 – CIPP MAIN LINER THICKNESS VARIANCE

Payment for CI PP Main Liner Thickness Variance will be made per linear foot for the applicable pipe diameters listed in the Proposal, regardless of depth or overall length. Liner thickness may be varied due to field conditions requiring a change in the specified minimum thickness. The per linear foot price for CIPP Main Liner Thickness Variance will be added to, or deducted from, the per linear foot price of the Main Liner for the applicable pipe diameter listed in the Bid Form (Pay Items 15 through 22). The Main Liner per linear foot price will be adjusted for each 1.5 mm thickness variance increment. Liner thickness shall be in accordance with Technical Specification Section headed "Cured-In-Place-Pipe (CIPP) " unless otherwise approved by the Engineer in writing.

PAY ITEM	DESCRIPTION	UNITS
23	CIPP Main Liner 6” Diameter – Thickness Variance + 1.5 mm	LF
24	CIPP Main Liner 8” Diameter – Thickness Variance + 1.5 mm	LF
25	CIPP Main Liner 10” Diameter – Thickness Variance + 1.5 mm	LF
26	CIPP Main Liner 12” Diameter – Thickness Variance + 1.5 mm	LF
27	CIPP Main Liner 15” Diameter – Thickness Variance + 1.5 mm	LF
28	CIPP Main Liner 18” Diameter – Thickness Variance + 1.5 mm	LF
29	CIPP Main Liner 21” Diameter – Thickness Variance + 1.5 mm	LF
30	CIPP Main Liner 24” Diameter – Thickness Variance + 1.5 mm	LF

PAY ITEMS NO. 31 – 38 – BYPASS PUMPING SETUP & OPERATION

This item provides for set up and operation of by-pass sewage pumping equipment and temporary piping as required and as described in the Standard Technical Specifications. This Pay Item is applicable on projects or repairs that have high flow or require an over night by pass operation.

The quantity to be measured for payment under this Pay Item will be the actual number of by-pass pumping set ups and operations, per part of day, required by the Engineer in the work. The minimum measurement for this pay item is eight (8) hours or 0.333 days and is measured from the time that the sewage is actually by-passed. This eight (8) hour minimum (0.333 days) includes full compensation for set up and operation for up to the first eight (8) hour period. Additional time will be in tenths of the day or twenty-four (24) hour period. The quantities determined shall be paid per day (DAY) or portion of day of by-pass pumping set up and operation.

PAY ITEM	DESCRIPTION	UNITS
31	Bypass Pumping, Set up, 6" - 10" diameter	EA
32	Bypass Pumping, Set up, 12" - 14" diameter	EA
33	Bypass Pumping, Set up, 15" - 21" diameter	EA
34	Bypass Pumping, Set up, 24" diameter	EA
35	Bypass Pumping, Operation, 6" - 10" diameter	DAY
36	Bypass Pumping, Operation, 12" - 14" diameter	DAY
37	Bypass Pumping, Operation, 15" - 21" diameter	DAY
38	Bypass Pumping, Operation, 24" diameter	DAY

PAY ITEMS NO. 39-42 – NORMAL CLEANING

Payment for Normal Cleaning will be made per linear foot for the applicable pipe diameters listed in the Bid Form, regardless of depth or overall length. Measurement will be from the upstream manhole to the downstream manhole centerlines and based on the average debris depth. Payment shall include all materials, labor, equipment, and supplies necessary for Normal Cleaning, and specifically includes, but is not limited to, the complete removal and disposal of all accumulated debris within the pipe including sludge, dirt, rocks, sand, rubble, and other materials and obstructions, restoration, and all other appurtenant work as specified. Separate Pay Items are provided for Specialty Cleaning.

PAY ITEM	DESCRIPTION	UNITS
39	Normal Cleaning – 6” and 8” Diameter	LF
40	Normal Cleaning – 10” and 12” Diameter	LF
41	Normal Cleaning – 15” and 18” Diameter	LF
42	Normal Cleaning – 21” and 24” Diameter	LF

PAY ITEMS NO. 43-46 – SPECIALTY CLEANING

Payment will be made per linear foot for the applicable pipe diameters listed in the Bid Form, regardless of depth or overall length. Measurement will be based on a minimum of 50 linear feet of pipe, or the actual length of the Specialty Cleaning performed, but not necessarily for the entire pipe segment length. Specialty Cleaning of only joints within a pipe segment, or portion thereof, shall count as 2.5 feet of equivalent pipe length (For Example: 400 feet of 8" pipe with 5 ft joints, clean all joints =80 joints x 2.5 ft =200 feet of specialty cleaning). Equivalent joint length shall not be counted in addition to the length of a pipe segment, or portion thereof, where continuous Specialty Cleaning has been performed. Payment shall include all materials, labor, equipment, and supplies necessary for Specialty Cleaning of wastewater pipe, and specifically includes, but is not limited to, the complete removal and disposal of all accumulated debris within the pipe including grease, roots, joint sealant, tuberculation, and other adherent deposits through the use of special equipment, restoration, and all other appurtenant work as specified. Specialty Cleaning is in addition to Normal Cleaning as described in Pay Items 39 through 42.

PAY ITEM	DESCRIPTION	UNITS
43	Normal Cleaning – 6” and 8” Diameter	LF
44	Normal Cleaning – 10” and 12” Diameter	LF

45	Normal Cleaning – 15” and 18” Diameter	LF
46	Normal Cleaning – 21” and 24” Diameter	LF

PAY ITEMS NO. 47-49 – CHEMICAL SEALING OF HOST PIPE

Payment will be made per each host pipe for the applicable pipe diameters listed in the Bid Form, regardless of depth, overall length, or the number of infiltration points sealed. Measurement will be for a host pipe between manholes. Payment shall include all materials, labor, equipment and supplies necessary for the Chemical Sealing of Host Pipe, and specifically includes, but is not limited to, sealing excessive infiltration at pipe joints and other defects, disposal of debris, post-rehabilitation CCTV inspection video and log, restoration, and all other appurtenant work as specified. A separate Pay Item is provided Chemical Sealing - Grout material.

PAY ITEM	DESCRIPTION	UNITS
47	Chemical Sealing of Host Pipe – 10” Diameter and Less	EA
48	Chemical Sealing of Host Pipe – 12” and 15” Diameter	EA
49	Chemical Sealing of Host Pipe – 18” to 24” Diameter	EA

PAY ITEM NO. 50 – CHEMICAL SEALING - GROUT

Payment will be made per gallon. This Pay item is applicable only in conjunction with Pay Items 47 through 49. Payment shall include all materials, equipment and labor for chemically sealing excessive infiltration at pipe joints and other defects at specified locations for Chemical Sealing of Host Pipe prior to CIPP liner installation.

PAY ITEM NO. 51 – REMOVAL & SEALING OF PROTRUDING SERVICE CONNECTIONS

Payment will be made per each service regardless of the connection diameter or main pipe diameter. Payment shall include all materials, labor, equipment and supplies necessary for the Removal & Sealing of Protruding Connections, and specifically includes, but is not limited to, removing protruding lateral by internal cutting or other remote methods, grouting the main/lateral connection, disposal of debris, post-rehabilitation CCTV inspection video and log, restoration, and all other appurtenant work as specified.

PAY ITEM NO. 52 – ADDITIONAL ACCESS COST MAIN LINER

Payment for Additional Access Cost Main Liner will be made per each access. Measurement will be for a liner installation where both the upstream and downstream manhole are not readily accessible by standard equipment, e.g., when located in rear easements. Payment shall include all additional labor, equipment, materials and supplies to complete the CIPP Main Liner installation in locations with limited access. The Contractor shall attempt to schedule and stage the Work to permit the lining of multiple, contiguous pipe segments from an accessible manhole where feasible.

PAY ITEM NO. 53 – SERVICE RECONNECTION

Payment will be made per each service regardless of the connection diameter or host pipe diameter, and regardless of depth or overall length of the host pipe. Payment shall include all materials, labor, equipment, and supplies necessary for the service reconnection, and specifically includes, but is not limited to, reconnecting service lateral by internal cutting or other remote methods, grouting the annular space between the liner and host pipe at the lateral connection and the first 18-inches of the service lateral, post-rehabilitation CCTV inspection video and log, disposal of debris, restoration, and all other appurtenant work as specified. No additional payment will be made for service reconnections made by excavation.

PAY ITEM NO. 54 – CIPP LINER TESTING

Payment will be made per each test. Measurement will be for a set of tests completed for a liner installation and accepted by the Engineer. Payment shall include all materials, labor, equipment, supplies, and expenses necessary for CIPP Liner Testing, and specifically includes, but is not limited to, preparing samples, laboratory testing, submitting the results to the Engineer, and all other appurtenant work as specified. The cost to obtain and store samples for testing, and any retesting of samples is not included in this Pay Item.

WASTEWATER SYSTEM POINT REPAIRS

PAY ITEM NO. 1 – MOBILIZATION FOR ROUTINE RESPONSE

The work specified in this item consists of the preparatory work and operations in mobilizing for beginning work on the project This item includes, but is not limited to, those operations necessary for the movement of personnel, equipment, supplies and incidentals to and from the project site as a single occurrence per work site, and for the establishment of Subcontractor's temporary offices, buildings, safety equipment, first aid supplies, sanitary and other facilities, as required by these Specifications, special provisions, and State and local laws and regulations. The costs of bonds, permits and any required insurance, and any other preconstruction expense necessary for the start of the work, excluding the cost of construction materials, shall also be included in this item. Labor and equipment travel time from/to the site is included in this pay item.

For routine work, as identified by the Engineer or his designee, the Contractor will be required to respond to the request of the Engineer, or designated representative within ten (10) calendar days of notification. The Scope of Work will be developed by Project manager and will be executed in accordance with the terms and conditions of this contract.

The quantity of mobilization to be paid for under this item shall be measured as one unit each (EA) per job assignment. One (1) mobilization will be allowed for each job assignment, project, or work order no matter how many times the equipment must be relocated by loading, transporting and unloading, or under its own power to complete the job assignment or project.

PAY ITEM NO. 2 – MOBILIZATION FOR EMERGENCY RESPONSE

The work specified in this item consists of the preparatory work and operations in mobilizing for beginning work on the project This item includes, but is not limited to, those operations necessary for the movement of personnel, equipment, supplies and incidentals to and from the project site as a single occurrence per work site, and for the establishment of Subcontractor's temporary offices, buildings, safety equipment, first aid supplies, sanitary and other facilities, as required by these Specifications, special provisions, and State and local laws and regulations. The costs of bonds, permits and any required insurance, and any other preconstruction expense necessary for the start of the work, excluding the cost of construction materials, shall also be included in this item. Labor and equipment travel time from/to the site is included in this pay item.

For emergency work, as identified by the Engineer or his designee, the Contractor will be required to respond to the request of the Engineer, or designated representative within ten (10) calendar days of notification. The Scope of Work will be developed by Project manager and will be executed in accordance with the terms and conditions of this contract.

The quantity of mobilization to be paid for under this item shall be measured as one unit each (EA) per job assignment. One (1) mobilization will be allowed for each job assignment, project, or work order no matter how many times the equipment must be relocated by loading, transporting and unloading, or under its own power to complete the job assignment or project.

PAY ITEMS NO. 3 – 15 – MAINTENANCE OF TRAFFIC

This work consists of maintaining traffic within the limits of the project for the duration of the construction period, including any temporary suspensions of the work. All Maintenance of Traffic (MOT) shall comply with FDOT Standard Plans Index 102 Series for Maintenance of Traffic. These pay items shall include labor and equipment to furnishing, installing and maintaining of traffic control and safety devices during construction; the construction and maintenance of any necessary detour facilities; providing necessary facilities for access to residences, businesses, pedestrian, schools, etc., control of dust and any other special requirements for safe and expeditious movement of traffic as may be called for on the plans. MOT shall include all of such facilities, devices and operations as are required for the safety and convenience of the public, as well as for minimizing public nuisance. The Contractor, however, shall not obstruct nor create a hazard to any traffic during the performance of the work and shall be responsible for repair of any damage to existing pavement or facilities caused by his operations. Traffic Control Devices include all types of barricades, arrow boards, signs, temporary pavement markers, lights, concrete barriers and permanent striping. All travel, equipment, labor overhead or any other associated expenses in transportation and setting out the MOT will be included in the price. All MOT line items for Multi-Lane work shall include all costs for items associated with the appropriate FDOT Index (no separate payment for signs, barricades, etc. included with index will be allowed).

Maintenance of Traffic (MOT) shall be measured as units of work, each/day (EA/DY), hourly (HR) or by linear foot (LF) accordingly completed and priced on an individual project basis. The lump sum price for each assignment will be based on the specific MOT requirements for the assignment. The Contractor shall provide the Engineer with a proposal for the MOT that includes a breakdown of the costs, which are included in the lump sum price, and receive written acceptance from the Engineer prior to the installation of the MOT.

PAY ITEM	DESCRIPTION	UNITS
3	Flagmen (Per-Flagmen)	HR
4	Multi Lane, Lane Closures (FDOT Index No. 613)	EA/DY
5	Multi Lane, Intersection (FDOT Index No. 615)	EA/DY
6	Arrow Boards - 5' Minimum Horizontal Size	EA/DY
7	Variable Message Board	EA/DY
8	Concrete Barrier (FDOT Index No. 100)	EA/DY
9	Low Profile Barrier (FDOT Index No. 120)	EA/DY
10	Signs in Work Zones	EA/DY
11	6" Solid line Thermo Plastic - Permanent	LF
12	24" Stop Bar, Solid, Thermo Plastic, Perm.	LF
13	6" Skip line (6'-10' Skip) Thermo Plastic-Perm.	LF
14	Barricades Type III, with Warning Lights	EA/DY
15	Barricades Type I or II, with Warning Lights	EA/DY

PAY ITEM NO. 16 – AS-BUILT SURVEY

Payment for all work included, but is not limited to, under this Pay Item shall represent full

compensation in accordance with the lump sum price bid for as-built record drawings or any other required certifications to put the proposed system in service. All items are subject to approval by the Engineer.

The quantity to be paid for under this pay item shall per as-built survey completed by a professional surveyor based on the linear foot of sewer main installed.

PAY ITEM NO. 17 – EXCAVATION, UNSUITABLE MATERIAL

The work specified in this item describes the removal of soil unsuitable for a proper foundation, encountered at trench grade. The unsuitable soil shall be removed and disposed of the full width of the trench and to the depth required by the Engineer and replaced with approved bedding material. The backfill shall be thoroughly compacted and shaped to form the pipe bed.

The quantity to be paid for under this Item shall be the volume in cubic yards (CY), computed by the average end area method, of the unsuitable material removed within the limits of depth shown on the Plans or as directed by the Engineer or his representative.

PAY ITEMS NO. 18 & 19 – SHEETING AND BRACING, ADDITIONAL

The quantities to be paid for under this item shall be the number of square feet of sheeting installed in addition to 6’ of depth. The quantities to be paid for under this item shall be based on the square feet of sheeting installed and accepted.

PAY ITEM	DESCRIPTION	UNITS
18	Sheeting & Bracing (Left in Place)	SF
19	Sheeting & Bracing, Pipe Trenches (Removed)	SF

PAY ITEMS NO. 20 - 25 – WELL POINT DEWATERING INITIAL

Measurement and payment of this pay item is based on the set up of dewatering equipment as required by the Contractor and allowed or directed by the Engineer to perform contracted work in accordance with the Technical Specifications. The work shall include all labor, equipment and materials, testing, and any required incidentals necessary to completely install, monitor and operate the dewatering system including the placement of up to twenty (20) well points to the various depths listed in the proposal per job assignment. The dewatering system shall stabilize the excavation and remain in operation until backfilling operations are complete. This pay item shall include the maintenance, repairs, pumps, fueling, oiling greasing, and other operational support procedures and supplies required for the operation of the system.

Well point dewatering is an authorized pay item only when the installation is below 6 feet in depth and site conditions warrant or on emergency response work where site conditions warrant as directed by the City representative.

The quantities to be paid for under this item shall be based on the depth of each (EA) dewatering

system per job assignment, installed and accepted.

PAY ITEM	DESCRIPTION	UNITS
20	Well Point Dewatering Initial – 6'-8' Deep	EA
21	Well Point Dewatering Initial – 8'-10' Deep	EA
22	Well Point Dewatering Initial – 10'-12' Deep	EA
23	Well Point Dewatering Initial – 12'-14' Deep	EA
24	Well Point Dewatering Initial – 14'-16' Deep	EA
25	Well Point Dewatering Initial – >16' Deep	EA

PAY ITEMS NO. 26 – 31 – WELL POINT DEWATERING ADDITIONAL

This item provides all labor, materials and equipment for the placement and operation of additional well points over and above the twenty (20) well points paid for under Pay Items 20-25. The work includes connection of the well points to the dewatering pumping equipment.

The quantity to be paid under this item will be the actual number of each (EA) well points placed and operated in the work as directed by Engineer for the various depths listed in the proposal less the twenty (20) paid for under Pay Items 20-25.

PAY ITEM	DESCRIPTION	UNITS
26	Well Point Dewatering Additional – 6'-8' Deep	EA
27	Well Point Dewatering Additional – 8'-10' Deep	EA
28	Well Point Dewatering Additional – 10'-12' Deep	EA
29	Well Point Dewatering Additional – 12'-14' Deep	EA
30	Well Point Dewatering Additional – 14'-16' Deep	EA
31	Well Point Dewatering Additional – >16' Deep	EA

PAY ITEMS NO. 32 – 35 – JACK & BORE

The work consists of furnishing all labor, equipment and materials and installing the crossing listed on the Bid Form by the jack and bore method in accordance with the specifications. The unit price shall include all costs necessary to install the crossing at the specified depth and size, including survey layout (based upon property monuments established by others), protection of property, materials, dewatering, pavement cutting, launching and receiving pits, exploratory pits, restrained joints, carrier pipe, tracer wire, tracer wire testing, casing pipe, casing spacers, casing end seals, fitting material including joints and jointing material, bracing, utility crossings, barricades, clearing, grubbing and stripping of the right-of-way, trenching, bedding and backfilling, protection of existing utilities; pigging, flushing and cleaning, pressure testing and As-built documentation. Surface restoration if specified or directed, will be paid for under other Pay Items.

The quantity for furnishing and installing the pipe or casing shall be made on a per linear foot basis as measured horizontally above the centerline of the casing including the length of four (4) feet beyond the edge of pavement or back of the concrete curb from each side of the road or driveway.

PAY ITEM	DESCRIPTION	UNITS
32	Jack & Bore 12” x 0.188” Steel Casing (6” GS)	LF
33	Jack & Bore 16” x 0.219” Steel Casing (8” GS)	LF
34	Jack & Bore 20” x 0.250” Steel Casing (10” GS)	LF
35	Jack & Bore 24” x 0.281” Steel Casing (12” GS)	LF

PAY ITEMS NO. 36 – 41 – DIRECTIONAL DRILL

The work consists of furnishing and installing underground sewer mains using the horizontal directional drilling (HDD) method of installation. This work shall include all services, equipment, materials, labor, installation of two 14 gauge minimum tracer wires, tracer wire testing, appurtenances, DI/HDPE mechanical joint adapters, pipe and joint restraints for connections to fittings, materials above or below ground along pipeline alignment; joints and jointing materials, bentonite clay slurry seal, launching and receiving pits, exploratory pits; bracing, bedding and backfill, disposal of spoil; pressure testing; pigging, flushing, cleaning erosion protection and control, surface grading, and all other related and necessary materials for the complete and proper installation, testing, and restoration of underground sewer mains

Measurement for payment for furnishing and installing HDD pipe for drill depths up to 20-foot-deep shall be made on a per linear foot (LF) basis as measured horizontally on the ground above the pipe centerline through valves and fittings for all pipe. Measurement for payment for finishing and installation HDD pipe for drill depths greater than 20-foot depth shall be made on a per linear foot (LF) basis of the actual length of pipe installed.

PAY ITEM	DESCRIPTION	UNITS
36	2” Directional Drill HDPE DR 9, IPS	LF
37	4” Directional Drill HDPE DR 11, DIPS	LF
38	6” Directional Drill HDPE DR 11, DIPS	LF
39	8” Directional Drill HDPE DR 11, DIPS	LF
40	10” Directional Drill HDPE DR 11, DIPS	LF
41	12” Directional Drill HDPE DR 11, DIPS	LF

PAY ITEMS NO. 42 – 146 – GRAVITY SANITARY SEWER

The work consists of furnishing all labor, equipment and materials for installing pipe as shown on the plans or directed by the Engineer. All ductile iron pipe shall have polyethylene encasement. The unit price shall include all costs necessary to install the pipe including survey layout (based upon property monuments established by others), clearing and grubbing, excavation, sheeting/shoring for excavation up to 6-ft deep, bracing, dewatering for excavations up to 6-ft deep, structural fill, material, polyethylene wrap on ductile iron pipe, testing, pavement cutting, trenching, utility crossings, barricades, clearing of the right-of-way, protection of property, backfilling, field layout, etc. Restoration will be paid for under separate pay items. Work performed for Point Repairs of gravity sewer pipes will be paid for under separate pay items.

The quantities of pipe to be paid for under this item shall be the length in linear feet of pipe measured along the centerline of the pipe through manholes in place, completed, tested, and accepted.

PAY ITEM	DESCRIPTION	UNITS
42	6" PVC Pipe, C-900 DR 18 (Gravity Sewer) 0' - 6' Depth	LF
43	6" PVC Pipe, C-900 DR 18 (Gravity Sewer) 6' - 8' Depth	LF
44	6" PVC Pipe, C-900 DR 18 (Gravity Sewer) 8' - 10' Depth	LF
45	6" PVC Pipe, C-900 DR 18 (Gravity Sewer) 10' - 12' Depth	LF
46	6" PVC Pipe, C-900 DR 18 (Gravity Sewer) 12' - 14' Depth	LF
47	6" PVC Pipe, C-900 DR 18 (Gravity Sewer) 14' - 16' Depth	LF
48	6" PVC Pipe, C-900 DR 18 (Gravity Sewer) 16' - 18' Depth	LF
49	8" DI Pipe, CL 350 (Gravity Sewer) 0' - 6' Depth	LF
50	8" DI Pipe, CL 350 (Gravity Sewer) 6' - 8' Depth	LF
51	8" DI Pipe, CL 350 (Gravity Sewer) 8' - 10' Depth	LF
52	8" DI Pipe, CL 350 (Gravity Sewer) 10' - 12' Depth	LF
53	8" DI Pipe, CL 350 (Gravity Sewer) 12' - 14' Depth	LF
54	8" DI Pipe, CL 350 (Gravity Sewer) 14' - 16' Depth	LF
55	8" DI Pipe, CL 350 (Gravity Sewer) 16' - 18' Depth	LF
56	8" PVC Pipe, C-900 DR 18 (Gravity Sewer) 0' - 6' Depth	LF
57	8" PVC Pipe, C-900 DR 18 (Gravity Sewer) 6' - 8' Depth	LF
58	8" PVC Pipe, C-900 DR 18 (Gravity Sewer) 8' - 10' Depth	LF
59	8" PVC Pipe, C-900 DR 18 (Gravity Sewer) 10' - 12' Depth	LF
60	8" PVC Pipe, C-900 DR 18 (Gravity Sewer) 12' - 14' Depth	LF
61	8" PVC Pipe, C-900 DR 18 (Gravity Sewer) 14' - 16' Depth	LF
62	8" PVC Pipe, C-900 DR 18 (Gravity Sewer) 16' - 18' Depth	LF
63	10" DI Pipe, CL 350 (Gravity Sewer) 0' - 6' Depth	LF

64	10" DI Pipe, CL 350 (Gravity Sewer) 6' - 8' Depth	LF
65	10" DI Pipe, CL 350 (Gravity Sewer) 8' - 10' Depth	LF
66	10" DI Pipe, CL 350 (Gravity Sewer) 10' - 12' Depth	LF
67	10" DI Pipe, CL 350 (Gravity Sewer) 12' - 14' Depth	LF
68	10" DI Pipe, CL 350 (Gravity Sewer) 14' - 16' Depth	LF
69	10" DI Pipe, CL 350 (Gravity Sewer) 16' - 18' Depth	LF
70	10" PVC Pipe, C-900 DR 18 (Gravity Sewer) 0' -6' Depth	LF
71	10" PVC Pipe, C-900 DR 18 (Gravity Sewer) 6' - 8' Depth	LF
72	10" PVC Pipe, C-900 DR 18 (Gravity Sewer) 8' - 10' Depth	LF
73	10" PVC Pipe, C-900 DR 18 (Gravity Sewer) 10' - 12' Depth	LF
74	10" PVC Pipe, C-900 DR 18 (Gravity Sewer) 12' - 14' Depth	LF
75	10" PVC Pipe, C-900 DR 18 (Gravity Sewer) 14' - 16' Depth	LF
76	10" PVC Pipe, C-900 DR 18 (Gravity Sewer) 16' - 18' Depth	LF
77	12" DI Pipe, CL 350 (Gravity Sewer) 0' - 6' Depth	LF
78	12" DI Pipe, CL 350 (Gravity Sewer) 6' - 8' Depth	LF
79	12" DI Pipe, CL 350 (Gravity Sewer) 8' - 10' Depth	LF
80	12" DI Pipe, CL 350 (Gravity Sewer) 10' - 12' Depth	LF
81	12" DI Pipe, CL 350 (Gravity Sewer) 12' - 14' Depth	LF
82	12" DI Pipe, CL 350 (Gravity Sewer) 14' - 16' Depth	LF
83	12" DI Pipe, CL 350 (Gravity Sewer) 16' - 18' Depth	LF
84	12" PVC Pipe, C-900 DR 18 (Gravity Sewer) 0' ' 6' Depth	LF
85	12" PVC Pipe, C-900 DR 18 (Gravity Sewer) 6' - 8' Depth	LF
86	12" PVC Pipe, C-900 DR 18 (Gravity Sewer) 8' - 10' Depth	LF
87	12" PVC Pipe, C-900 DR 18 (Gravity Sewer) 10' - 12' Depth	LF

88	12" PVC Pipe, C-900 DR 18 (Gravity Sewer) 12' - 14' Depth	LF
89	12" PVC Pipe, C-900 DR 18 (Gravity Sewer) 14' - 16' Depth	LF
90	12" PVC Pipe, C-900 DR 18 (Gravity Sewer) 16' - 18' Depth	LF
91	16" DI Pipe, CL 350 (Gravity Sewer) 0' - 6' Depth	LF
92	16" DI Pipe, CL 350 (Gravity Sewer) 6' - 8' Depth	LF
93	16" DI Pipe, CL 350 (Gravity Sewer) 8' - 10' Depth	LF
94	16" DI Pipe, CL 350 (Gravity Sewer) 10' - 12' Depth	LF
95	16" DI Pipe, CL 350 (Gravity Sewer) 12' - 14' Depth	LF
96	16" DI Pipe, CL 350 (Gravity Sewer) 14' - 16' Depth	LF
97	16" DI Pipe, CL 350 (Gravity Sewer) 16' - 18' Depth	LF
98	16" PVC Pipe, C-905 DR 18 (Gravity Sewer) 0' - 6' Depth	LF
99	16" PVC Pipe, C-905 DR 18 (Gravity Sewer) 6' - 8' Depth	LF
100	16" PVC Pipe, C-905 DR 18 (Gravity Sewer) 8' - 10' Depth	LF
101	16" PVC Pipe, C-905 DR 18 (Gravity Sewer) 10' - 12' Depth	LF
102	16" PVC Pipe, C-905 DR 18 (Gravity Sewer) 12' - 14' Depth	LF
103	16" PVC Pipe, C-905 DR 18 (Gravity Sewer) 14' - 16' Depth	LF
104	16" PVC Pipe, C-905 DR 18 (Gravity Sewer) 16' - 18' Depth	LF
105	18" DI Pipe, CL 350 (Gravity Sewer) 0' - 6' Depth	LF
106	18" DI Pipe, CL 350 (Gravity Sewer) 6' - 8' Depth	LF
107	18" DI Pipe, CL 350 (Gravity Sewer) 8' - 10' Depth	LF
108	18" DI Pipe, CL 350 (Gravity Sewer) 10' - 12' Depth	LF
109	18" DI Pipe, CL 350 (Gravity Sewer) 12' - 14' Depth	LF
110	18" DI Pipe, CL 350 (Gravity Sewer) 14' - 16' Depth	LF
111	18" DI Pipe, CL 350 (Gravity Sewer) 16' - 18' Depth	LF
112	18" PVC Pipe, C-905 DR 21 (Gravity Sewer) 0' - 6' Depth	LF

113	18" PVC Pipe, C-905 DR 21 (Gravity Sewer) 6' - 8' Depth	LF
114	18" PVC Pipe, C-905 DR 21 (Gravity Sewer) 8' - 10' Depth	LF
115	18" PVC Pipe, C-905 DR 21 (Gravity Sewer) 10' - 12' Depth	LF
116	18 PVC Pipe, C-905 DR 21 (Gravity Sewer) 12' - 14' Depth	LF
117	18" PVC Pipe, C-905 DR 21 (Gravity Sewer) 14' - 16' Depth	LF
118	18" PVC Pipe, C-905 DR 21 (Gravity Sewer) 16' - 18' Depth	LF
119	21" DI Pipe, CL 350 (Gravity Sewer) 0' - 6' Depth	LF
120	21" DI Pipe, CL 350 (Gravity Sewer) 6' - 8' Depth	LF
121	21" DI Pipe, CL 350 (Gravity Sewer) 8' - 10' Depth	LF
122	21" DI Pipe, CL 350 (Gravity Sewer) 10' - 12' Depth	LF
123	21" DI Pipe, CL 350 (Gravity Sewer) 12' - 14' Depth	LF
124	21" DI Pipe, CL 350 (Gravity Sewer) 14' - 16' Depth	LF
125	21" DI Pipe, CL 350 (Gravity Sewer) 16' - 18' Depth	LF
126	21" PVC Pipe, C-905 DR 21 (Gravity Sewer) 0' - 6' Depth	LF
127	21" PVC Pipe, C-905 DR 21 (Gravity Sewer) 6' - 8' Depth	LF
128	21" PVC Pipe, C-905 DR 21 (Gravity Sewer) 8' - 10' Depth	LF
129	21" PVC Pipe, C-905 DR 21 (Gravity Sewer) 10' - 12' Depth	LF
130	21" PVC Pipe, C-905 DR 21 (Gravity Sewer) 12' - 14' Depth	LF
131	21" PVC Pipe, C-905 DR 21 (Gravity Sewer) 14' - 16' Depth	LF
132	21" PVC Pipe, C-905 DR 21 (Gravity Sewer) 16' - 18' Depth	LF
133	24" DI Pipe, CL 350 (Gravity Sewer) 0' - 6' Depth	LF
134	24" DI Pipe, CL 350 (Gravity Sewer) 6' - 8' Depth	LF
135	24" DI Pipe, CL 350 (Gravity Sewer) 8' - 10' Depth	LF
136	24" DI Pipe, CL 350 (Gravity Sewer) 10' - 12' Depth	LF

137	24" DI Pipe, CL 350 (Gravity Sewer) 12' - 14' Depth	LF
138	24" DI Pipe, CL 350 (Gravity Sewer) 14' - 16' Depth	LF
139	24" DI Pipe, CL 350 (Gravity Sewer) 16' - 18' Depth	LF
140	24" PVC Pipe, C-905 DR 21 (Gravity Sewer) 0' - 6' Depth	LF
141	24" PVC Pipe, C-905 DR 21 (Gravity Sewer) 6' - 8' Depth	LF
142	24" PVC Pipe, C-905 DR 21 (Gravity Sewer) 8' - 10' Depth	LF
143	24" PVC Pipe, C-905 DR 21 (Gravity Sewer) 10' - 12' Depth	LF
144	24" PVC Pipe, C-905 DR 21 (Gravity Sewer) 12' - 14' Depth	LF
145	24" PVC Pipe, C-905 DR 21 (Gravity Sewer) 14' - 16' Depth	LF
146	24" PVC Pipe, C-905 DR 21 (Gravity Sewer) 16' - 18' Depth	LF

PAY ITEM NO. 147 – INSTALL PVC CLEANOUT

The work consists of furnishing all labor, equipment, and materials for installation of a new PVC riser pipe and cleanout at the ROW line (or other location as directed by the Engineer) on existing sewer lateral. The existing sewer lateral material may be PVC, Vitrified Clay, or DIP pipe. The unit price shall include all costs necessary to install riser pipe and cleanout including survey layout (based upon property monuments established by others), material, polyethylene wrap on ductile iron pipe, fittings, pipe cutting, wye unit on main, installation of riser pipe and cleanout, pavement cutting, trenching, dewatering for excavations up to 6-ft deep, sheeting for excavations up to 6-ft deep, bracing, utility crossings, barricades, clearing of the right-of-way, protection of property, backfilling, field layout, restoration, sodding, etc. The pay item shall include cleanout installation up to ten (10) feet in depth.

The quantities of pipe to be paid for under this item shall be each measured and inspected in place, completed, and accepted.

PAY ITEM NO. 148 – REPLACE PVC CLEAN OUT WITH MANHOLE STRUCTURE

The work consists of furnishing all labor, equipment, and materials for the replacement of an existing PVC clean out with a concrete manhole. The unit price shall include all costs necessary to replace clean out including survey layout (based on property monuments established by others), material, fittings, pipe cutting, concrete manhole installation, pavement cutting, trenching, dewatering for excavations up to 6-ft deep, bracing, utility crossings, barricades, clearing of the right-of-way, protection of property, backfilling, field layout, restoration, sodding, etc. The pay item shall include the removal of clean outs and installation of manholes up to four (4) feet in depth.

The quantities of manholes to be paid for under this item shall be each measured and inspected in place, completed, and accepted.

PAY ITEMS NO. 149 – 153 – REMOVE PIPE (GRAVITY SEWER)

The work consists of furnishing all labor and equipment to remove and dispose of out of service mains. Unless otherwise indicted by the Engineer or his representative, the pipe removed becomes the property of the Contractor. The unit price shall include all costs necessary to remove the pipe (including fittings, valves, reverse deadmen, etc.) including pavement cutting, trenching, replacement of base material, dewatering for excavations up to 6- ft deep, sheeting for excavations up to 6-ft deep, bracing, utility crossings, barricades, clearing of the right-of-way, protection of property, backfilling, restoration of pavement and grass, etc.

The quantities of pipe removal to be paid for under this Item shall be the length in linear feet (LF) of pipe measured along the centerline of the pipe through valves and fittings actually removed.

PAY ITEM	DESCRIPTION	UNITS
149	Remove Pipe 2” or 4” (Gravity Sewer)	LF
150	Remove Pipe 6” or 8” (Gravity Sewer)	LF
151	Remove Pipe 10” or 12” (Gravity Sewer)	LF
152	Remove Pipe 15”, 16”, or 18” (Gravity Sewer)	LF
153	Remove Pipe 21” or 24” (Gravity Sewer)	LF

PAY ITEMS NO. 154 – 167 – INSTALL OR ADJUST SERVICE LATERAL

The work consists of furnishing all labor, equipment, by-pass operations, customer coordination and materials for installation of a new or relocating a sanitary sewer service lateral found to be in conflict with proposed improvement or as directed by the Engineer. The unit price shall include all costs necessary to install up 30 linear feet of service pipe including survey layout (based upon property monuments established by others), material, polyethylene wrap on ductile iron pipe, fittings, pipe cutting, wye unit on main, installation of riser pipe and cleanout at the ROW line, pavement cutting, trenching, dewatering for excavations up to 6-ft deep, sheeting for excavations up to 6-ft deep, bracing, utility crossings, barricades, clearing of the right-of-way, protection of property, backfilling, field layout, etc. Service pipe lengths in excess of 30 feet will be paid for as Gravity Sewer Pipe (Pay Items 41-145). Restoration will be paid for under separate pay items.

The quantities of pipe to be paid for under this item shall be each measured and inspected in place, completed, and accepted.

PAY ITEM	DESCRIPTION	UNITS
154	4" Pipe - Install or Adjust Service Lateral 0'-6' Deep	EA
155	4" Pipe - Install or Adjust Service Lateral 6'-8' Deep	EA
156	4" Pipe - Install or Adjust Service Lateral 8'-10' Deep	EA
157	4" Pipe - Install or Adjust Service Lateral 10'-12' Deep	EA

158	4" Pipe - Install or Adjust Service Lateral 12'-14' Deep	EA
159	4" Pipe - Install or Adjust Service Lateral 14'-16' Deep	EA
160	4" Pipe - Install or Adjust Service Lateral 16'-18' Deep	EA
161	6" Pipe - Install or Adjust Service Lateral 0'-6' Deep	EA
162	6" Pipe - Install or Adjust Service Lateral 6'-8' Deep	EA
163	6" Pipe - Install or Adjust Service Lateral 8'-10' Deep	EA
164	6" Pipe - Install or Adjust Service Lateral 10'-12' Deep	EA
165	6" Pipe - Install or Adjust Service Lateral 12'-14' Deep	EA
166	6" Pipe - Install or Adjust Service Lateral 14'-16' Deep	EA
167	6" Pipe - Install or Adjust Service Lateral 16'-18' Deep	EA

PAY ITEMS NO. 168 – 177 – SEWER LINE MANHOLE CONNECTION

The work consists of all labor, equipment, investigative digging, and materials for repair of an existing connection into manhole wall or to install a new connection. All core drills shall be of sufficient diameter to accommodate pipe connection. Manhole connections may be either gravity sewer or sewer forcemain. All connections shall include a water stop or boot connection. Payment shall also include core drills, masonry or concrete patching, fiberglass and interior surface patching, shoring, dewatering for excavations up to 6-ft deep, backfill, refill, compaction operations, and compaction testing or re-testing. All sewer forcemain connections shall include installation of a drop bowl, paid for under Pay Items 177-186. The work does not include excavation or surface restoration which, if required, will be paid for, or is part of the work, under other Pay Items.

The quantities of connections into manholes to be paid under this item shall be each measured in place, completed, inspected, and accepted.

PAY ITEM	DESCRIPTION	UNITS
168	2" Sewer Line Manhole Connection	EA
169	4" Sewer Line Manhole Connection	EA
170	6" Sewer Line Manhole Connection	EA
171	8" Sewer Line Manhole Connection	EA
172	10" Sewer Line Manhole Connection	EA
173	12" Sewer Line Manhole Connection	EA
174	16" Sewer Line Manhole Connection	EA
175	18" Sewer Line Manhole Connection	EA
176	21” Sewer Line Manhole Connection	EA
177	24” Sewer Line Manhole Connection	EA

PAY ITEMS NO. 178 – 187 – INSIDE DROP CONNECTION

This item provides for all labor, equipment and material to install a PVC drop connection inside an existing manhole. This work includes all interior piping, drop bowl and any masonry or concrete

and coatings patching required to complete a repair connection or install a new drop connection to an existing manhole in accordance with Technical Specifications.

The quantity to be measured for payment under this Pay Item will be the actual number each (EA) of manhole inside drop connections completed and accepted.

PAY ITEM	DESCRIPTION	UNITS
178	2" Inside Drop Connection	EA
179	4" Inside Drop Connection	EA
180	6" Inside Drop Connection	EA
181	8" Inside Drop Connection	EA
182	10" Inside Drop Connection	EA
183	12" Inside Drop Connection	EA
184	15"/16" Inside Drop Connection	EA
185	18" Inside Drop Connection	EA
186	21" Inside Drop Connection	EA
187	24" Inside Drop Connection	EA

PAY ITEM NO. 188 – GROUTING OUT OF SERVICE PIPE (FORCE MAIN)

This item provides for all labor, equipment and material to install chemical grout or flowable fill into an existing pipe to be abandoned. Prior to grout filling the line, the Contractor shall verify that no live services remain connected to the line. The underground conduit (pipe, waterline, sewer line, storm drain line, etc.) be completely filled with a low strength cement grout (or flowable fill). In order to achieve this, the grout to be pumped into the line shall have a consistency that will permit forced flow into the entire length of line. Blocking the line by intermediate excavation and gravity flow concrete or grout is NOT acceptable. The existing line to be grout filled shall be exposed and plugged with concrete bulkheads or plugs at both ends. The grout shall be pumped through the pipe until the grout is visible at the other end of the underground conduit. No more than 15 psi shall be used to pump the grout mixture, and care should be used to avoid grout filling adjoining voids.

The quantities of pipe to be paid for under this Item shall be the volume in cubic yards of the inside pipe area times the length of pipe. No payment will be made for material that escapes the pipe or ends enclosures.

PAY ITEMS NO. 189 – 191 – DISCONNECT & PLUG PIPE

The work consists of furnishing all labor, equipment and materials to disconnect and cap/plug sewer mains that will remain in or out of service. The unit price shall include all nuts, bolts, gaskets, caps/plugs, restraint devices, thrust blocks, cutting existing pipe, removal of valve boxes, blow-off assemblies, scheduling and notification of service interruptions and all other operations required to disconnect and cap/plug the water mains.

The quantity of disconnect and cap/plug water mains to be paid for under this item shall be the

number each (EA) measured in place, completed and accepted.

PAY ITEM	DESCRIPTION	UNITS
189	Disconnect & Plug 2" or 4" Pipe	EA
190	Disconnect & Plug 6" or 8" Pipe	EA
191	Disconnect & Plug 10" or 12" Pipe	EA

PAY ITEMS NO. 192 – 202 – SANITARY SEWER FORCE MAIN

The work consists of furnishing all labor, equipment and materials and installing sanitary forcemain pipe by the open-cut method in accordance with the specifications.

The unit price shall include all costs necessary to install the pipe up to 6 feet in depth, including: survey layout (based upon property monuments established by others); protection of property; protection of existing utilities, mailboxes and service connections; erosion protection (silt fence, hay bales, floating turbidity barriers, or other means, as required); materials, pavement cutting, extra pipe fitting material including joints/jointing material/restraints; shoring, sheeting for excavations up to 6-ft deep; bracing; utility crossings; barricades; clearing; grubbing and stripping of the right-of-way; trenching, bedding and backfilling; pigging; flushing and cleaning; pressure testing. Fittings shall be included in the cost of 2” pipe. Dual tracer wire and tracer wire testing shall be included in the price for PVC pipe items. Polyethylene encasement shall be included in the bid price for DI pipe items. Restoration will be paid for under separate pay items.

Additional payment will be made for extra depth installation over six feet under a separate pay item. Well point dewatering is an authorized pay item only when the installation is below 6 feet in depth and site conditions warrant; all dewatering up to 6 feet in depth is included in this pay item.

The quantities of pipe to be paid for under this Item shall be the length in linear feet of pipe measured along the centerline of the pipe in place, completed, tested, and accepted.

PAY ITEM	DESCRIPTION	UNITS
192	2" PVC Restrained Joint Pipe & Fittings FM, SDR 21	LF
193	4" PVC Pipe, C-900 DR 18 (Force Main)	LF
194	4" PVC Restrained Joint Pipe & Fittings FM, C-900 DR 18	LF
195	6" PVC Pipe, C-900 DR 18 (Force Main)	LF
196	6" PVC Restrained Joint Pipe & Fittings FM, C-900 DR 18	LF
197	8" PVC Pipe, C-900 DR 18 (Force Main)	LF
198	8" PVC Restrained Joint Pipe & Fittings FM, C-900 DR 18	LF
199	10" PVC Pipe, C-900 DR 18 (Force Main)	LF
200	10" PVC Restrained Joint Pipe & Fittings FM, C-900 DR 18	LF

201	12" PVC Pipe, C-900 DR 18 (Force Main)	LF
202	12" PVC Restrained Joint Pipe & Fittings FM, C-900 DR 18	LF

PAY ITEMS NO. 203 – 208 – RESTRAINED JOINTS

The work specified in this item describes measurement and payment for furnishing all labor, equipment and materials and installing restrained joint hardware including mechanical joint restrainers, bell restrainers and PVC restrainers complete including bolts, gaskets, rods, special flanges, color coded polyethylene encasement , testing, acceptance, and ready for service. Restrained joints for pipe associated with fittings per the design of new pipe shall be paid for under separate pay item. This item shall only be used to restrain existing in-service pipelines or to install additional restraints above the amount specified, as directed by the Engineer or his representative.
`

The quantities of retrained joints to be paid for under this item shall be the number of each (EA) measured in place and accepted. No restrained joint hardware or any part of a restrained joint hardware shall be included for payment under more than one Item.

PAY ITEM	DESCRIPTION	UNITS
203	2" Restrained Joints	EA
204	4" Restrained Joints	EA
205	6" Restrained Joints	EA
206	8" Restrained Joints	EA
207	10" Restrained Joints	EA
208	12" Restrained Joints	EA

PAY ITEMS NO. 209 – 211 - FORCE MAIN OVER DEPTH EXCAVATION

The work consists of furnishing all labor and equipment to excavate additional depth greater than 6 feet depth for installation of sewer forcemain pipe by the open-cut method in accordance with the specifications. The unit price shall include all costs necessary to excavate additional depth over 6 feet including: survey layout (based upon property monuments established by others); protection of property, existing utilities, mailboxes and service connections; erosion protection (silt fence, hay bales, floating turbidity barriers, or other means, as required); materials; pavement cutting; bracing; utility crossings; barricades; clearing; grubbing and stripping of the right-of-way; trenching, bedding; and backfilling. Well point dewatering and sheeting are authorized pay items when the installation is below 6 feet in depth and site conditions warrant.

Measurement for payment for excavating each additional foot of depth to install pipe or appurtenances shall be made on a per linear foot (LF) basis for each additional vertical foot of depth over 6 feet as measured horizontally above the pipe centerline through valves and fittings.

PAY ITEM	DESCRIPTION	UNITS
209	2"-4" Forcemain Pipe and Appurtenances - Over Depth Excavation	LF

210	6"-8" Forcemain Pipe and Appurtenances - Over Depth Excavation	LF
211	10"-12" Forcemain Pipe and Appurtenances - Over Depth Excavation	LF

PAY ITEMS NO. 212 – 214 – REMOVE OUT OF SERVICE PIPE (FORCE MAIN)

The work consists of furnishing all labor and equipment to remove and dispose of out of service mains. Unless otherwise indicted by the Engineer or his representative, the pipe removed becomes the property of the Contractor. The unit price shall include all costs necessary to remove the pipe (including fittings, valves, reverse deadmen, etc) including pavement cutting, trenching, replacement of base material, dewatering for excavations up to 6-ft deep, sheeting for excavations up to 6-ft deep, bracing, utility crossings, barricades, clearing of the right-of-way, protection of property, backfilling, etc. Restoration will be paid for under separate pay items.

The quantities of pipe removal to be paid for under this Item shall be the length in linear feet (LF) of pipe measured along the centerline of the pipe through valves and fittings actually removed.

PAY ITEM	DESCRIPTION	UNITS
212	Remove Out of Service Pipe 2" or 4" (Force Main)	LF
213	Remove Out of Service Pipe 6" or 8" (Force Main)	LF
214	Remove Out of Service Pipe 10" or 12" (Force Main)	LF

PAY ITEMS NO. 215 – 220 – SLEEVED CONNECTION

The work consists of furnishing all labor, equipment and materials for installing sleeve connections not included in other items. The unit price shall include notification of shutdown to property owners, establishing alignment, moving and aligning old and new pipe, cleaning and cutting old pipe, sterilization, restraint jointing materials, color-coded polyethylene encasement, and all other operations required to make the connection. All connections shall include the cost of the sleeve or coupling, joint restraints and removal & disposal of up to twenty feet of existing main. Valves, pipe, additional joint restraints on existing main and fittings for connections shall be paid for under separate pay items.

The quantities of sleeve connection to be paid for under this item shall be the number each measured in place, completed, tested, and accepted

PAY ITEM	DESCRIPTION	UNITS
215	2" Sleeved Connection	EA
216	4" Sleeved Connection	EA
217	6" Sleeved Connection	EA
218	8" Sleeved Connection	EA
219	10" Sleeved Connection	EA
220	12" Sleeved Connection	EA

PAY ITEMS NO. 221 – 223 – REVERSE DEADMAN

The work covered by this item consists of reverse deadman installation for mains up to 12 inch in diameter. The installation shall include the corresponding size restrained joint as shown in the standard detail. This pay item includes: the furnishing of all materials and for the proper installation of the reverse deadman in strict accordance with the appropriate pipe specifications, excavation, erosion protection and control, backfill, dewatering for excavations up to 6-ft deep, sheeting for excavations up to 6-ft deep, shoring, surface grading, disposal of water, appropriate sized joint restraint, and concrete, all tools, equipment, labor, and materials necessary to install the reverse deadman as shown, specified or required for the proper completion of the work. Concrete shall cure for 72 hours or as determined by concrete mix design before applying force.

The quantities of reverse dead-man construction to be paid under this item shall be each measured in place, inspected, cured, and accepted.

PAY ITEM	DESCRIPTION	UNITS
221	Reverse Deadman for 2" or 4" Pipe	EA
222	Reverse Deadman for 6" or 8" Pipe	EA
223	Reverse Deadman for 10" or 12" Pipe	EA

PAY ITEM NO. 224 – DUCTILE IRON FITTINGS

The work consists of furnishing all labor, equipment and materials for installing ductile iron fittings not included in other items. All fittings shall include and be installed with joint restraints. The unit price includes furnishing and installing all fittings and materials above or below ground along the pipeline alignment; joints, joint restrainers, and jointing materials; bracing, shoring, and sheeting; dewatering, clearing, grubbing, and stripping; trenching, bedding and backfill; constructing the specified protection and adjusting of existing above ground and underground utilities and service connections; disposal of spoil; color coded polyethylene encasement; pressure testing; erosion protection and control, and all other related and necessary materials, work and equipment required to construct a complete, operable pipeline. The cost of furnishing and installing joint restraints shall be included in the unit price for Ductile Iron Fittings.

The quantities of ductile iron fittings to be paid for under this Item shall be the weight of the fitting required as established weight per fitting, including bolts, in tons (2,000 pounds) measured in place, completed, tested, and accepted. The weight of gaskets, jointing materials, etc., shall not be included in the computation of ductile iron fitting tonnage.

PAY ITEMS NO. 225 & 226 – 2” SS 316 AIR RELEASE VALVE ASSEMBLIES

The work consists of installing 2” SS 316 air release assemblies on sanitary sewer force mains. The unit bid price shall include installing the air release assembly, testing, excavation, backfill, bracing, shoring, sheeting for excavations up to 6-ft deep, dewatering for excavations up to 6-ft deep, surface grading, erosion protection and control, furnishing and installing tap saddle, tap, corporation stop, ball corporation, curb stop, automatic air release valve, enclosure, testing, miscellaneous brass nipples and fittings, and incidental items required to install a new assembly

as shown on the standard detail. All assemblies shall include tracer wire access, drainage gravel and miscellaneous nipples and fittings as shown in the standard details, filter fabric, valve identification tags, paint reference stripe on curb, painting of valve cover and meter boxes.

Measurement shall be on an individual basis for each (EA) assembly installed and accepted.

PAY ITEM	DESCRIPTION	UNITS
225	2" SS 316 Air Release Assembly (Underground)	EA
226	2" SS 316 Air Release Assembly (Aboveground)	EA

PAY ITEMS NO. 227 – 232 – RESILIENT WEDGE GATE VALVE

The work consists of furnishing all labor, equipment and materials for installing a valve not included in other items. The unit bid price includes furnishing and installing valves, valve boxes and covers, color coded polyethylene encasement, tracer wire access, filter fabric, valve identification tags, paint reference stripe on curb, painting of valve cover, concrete valve box pad, extension stems, joint restraints, pressure testing, excavation, backfill, dewatering for excavations up to 6-ft deep, sheeting for excavations up to 6-ft deep, shoring, surface grading and incidental construction associated with these items.

The quantities of valves to be paid for under this Item shall be the number each measured in place, completed, tested, and accepted.

PAY ITEM	DESCRIPTION	UNITS
227	2" RWGV (Resilient Wedge Gate Valve) & Box	EA
228	4" RWGV & Box C 515	EA
229	6" RWGV & Box C 515	EA
230	8" RWGV & Box C 515	EA
231	10" RWGV & Box C 515	EA
232	12" RWGV & Box C 515	EA

PAY ITEMS NO. 233 & 234 – ADJUST VALVE BOX TO FINISHED GRADE

The work consists of furnishing all labor, equipment, and materials for the vertical adjustment of an existing valve box and cover to match proposed finish grade. The unit price shall include placement of the valve cover to finish grade as shown on plans or directed by the Engineer.

the quantity of valve box and cover adjustments to be paid for under this item shall be the number each measured in place, on grade, inspected, and accepted.

PAY ITEM	DESCRIPTION	UNITS
233	Adjust Valve Box to Finished Grade (In Pavement)	EA
234	Adjust Valve Box to Finished Grade (Outside of Pavement)	EA

PAY ITEMS NO. 235 – 239 – LINE STOPS

The work consists of furnishing all labor, equipment and materials, including but not limited to dewatering for excavations up to 6-ft deep, excavation, sheeting for excavations up to 6-ft deep, shoring, preliminary measurements of the pipe prior to ordering the saddle, installing concrete cradle and support, line stop tapping sleeve, valve, and performing line stop installation with and for the duration of the new valve installation, pressure testing of tap saddle/sleeve, polyethylene wrap, and valve box for constructing a line stop on an existing sewer main and the adjustment of its valve box to finish grade. If a by-pass line stop installation is required, the by-pass piping will be paid for under line items for piping.

The quantities of Line Stops to be paid for under this Item shall be the number each measured in place, completed, tested, and accepted.

PAY ITEM	DESCRIPTION	UNITS
235	4" Line Stop	EA
236	6" Line Stop	EA
237	8" Line Stop	EA
238	10" Line Stop	EA
239	12" Line Stop	EA

PAY ITEMS NO. 240 – 259 – TAPPLING SLEEVE/SADDLE VALVE & BOX

The work consists of the installation of tapping saddle or sleeve and associated valves. The quantity to be paid for under this item is the number of connections acceptably installed. Cut in tee and valve may be required in some locations due to utility conflicts and will be paid for as equal sized tap. The unit bid price includes all materials and installation from the point of connection to the main line including scheduling and notification of service interruptions, furnishing and installing tapping saddle, color coded polyethylene encasement, valves, taps, fittings, piping, joint restraints, valve boxes and covers, concrete valve box pads, valve extension stems, tracer wire access, valve identification tags, filter fabric, paint reference stripe on curb, painting of valve box cover, excavation, erosion protection and control, backfill, dewatering for excavations up to 6-ft deep, sheeting for excavations up to 6-ft deep, shoring, surface grading, disposal of water, pressure testing and all other related, necessary, and incidental materials, work and equipment required to complete the connection. All joints shall be restrained.

The quantities of valves/taps to be paid for under this Item shall be the number each measured in place, completed, tested, and accepted.

PAY ITEM	DESCRIPTION	UNITS
240	4" x 2" Tapping Saddle Valve & Box	EA
241	4" x 4" Tapping Sleeve Valve & Box	EA
242	6" x 2" Tapping Saddle Valve & Box	EA
243	6" x 4" Tapping Sleeve Valve & Box	EA
244	6" x 6" Tapping Sleeve Valve & Box	EA

245	8" x 2" Tapping Saddle Valve & Box	EA
246	8" x 4" Tapping Sleeve Valve & Box	EA
247	8" x 6" Tapping Sleeve Valve & Box	EA
248	8" x 8" Tapping Sleeve Valve & Box	EA
249	10" x 2" Tapping Saddle Valve & Box	EA
250	10" x 4" Tapping Sleeve Valve & Box	EA
251	10" x 6" Tapping Sleeve Valve & Box	EA
252	10" x 8" Tapping Sleeve Valve & Box	EA
253	10" x 10" Tapping Sleeve Valve & Box	EA
254	12" x 2" Tapping Saddle Valve & Box	EA
255	12" x 4" Tapping Sleeve Valve & Box	EA
256	12" x 6" Tapping Sleeve Valve & Box	EA
257	12" x 8" Tapping Sleeve Valve & Box	EA
258	12" x 10" Tapping Sleeve Valve & Box	EA
259	12" x 12" Tapping Sleeve Valve & Box	EA

PAY ITEMS NO. 260 – 269 – MANHOLES

The work consists of furnishing all labor, equipment, by-pass operations, customer coordination and materials for constructing a sanitary sewer manhole at location shown on plans or as directed by the Engineer. The unit price shall include all costs necessary to construct the manhole including survey layout (based upon property monuments established by others), material, pavement cutting, trenching, replacement of base material, dewatering for excavations up to 6-ft deep, sheeting for excavations up to 6-ft deep, bracing, utility crossings, barricades, clearing of the right-of-way, protection of property, and backfilling. The depth of the manhole will be measured from the top of the cover down to the invert of the outlet sewer pipe. Excavation and well point dewatering for pipeline Manhole installations are separate pay items.

The quantities of manholes to be paid under this item shall be vertical feet of depth measured in place, completed, inspected, and accepted.

PAY ITEM	DESCRIPTION	UNITS
260	4' Dia. - Precast Manhole Standard	VF
261	4' Dia. - Precast Manhole Inside Drop	VF
262	4' Dia. - Precast Manhole Outside Drop	VF
263	5' Dia. - Precast Manhole Standard	VF
264	5' Dia. - Precast Manhole Inside Drop	VF
265	5' Dia. - Precast Manhole Outside Drop	VF
266	5' Dia. - Precast Air Release Manhole	VF
267	6' Dia. - Precast Manhole Standard	VF
268	6' Dia. - Precast Manhole Inside Drop	VF
269	6' Dia. - Precast Manhole Outside Drop	VF

PAY ITEM NO. 270 – REMOVAL OF EXISTING MANHOLE

This work item shall provide all labor, equipment and materials for the removal of existing manholes up to four feet in depth and plugging of existing lines with brick and mortar. The work does not include excavation, surface restoration, sheeting, MOT, or well point dewatering which, if required, will be paid for under other Pay Items.

The quantity to be measured for payment under this Pay Item will be the actual number of manhole removals completed and accepted up to four (4) feet in depth.

PAY ITEM NO. 271 – REMOVAL OF EXISITING MANHOLE ADDITIONAL

The work consists of all work contained in Pay Item Remove Existing Manholes and provides for manhole removal for depths greater than four (4') feet deep.

The quantity to be measured for payment under this Pay Item will be the actual length in vertical feet of additional manhole removal in the work less the four (4) feet paid for under other Pay Items

PAY ITEMS NO. 272 – 279 – INITIAL EXCAVATION

The work consists of furnishing all labor, equipment, materials, traffic control and supervision necessary for the excavation exposing up to 30 linear feet of existing sanitary sewer gravity or forcemain pipe as measured along the pipe in a horizontal plane. The unit price shall contain all costs necessary to expose the pipe, temporary sheeting/shoring/bracing up to 6-ft deep, dewatering, well point dewatering up to 6' deep, crushed stone, stabilization and protection of existing utilities, property protection, backfilling, compaction, and all other related and necessary materials required to expose the pipe to be repaired in accordance with the Contract Documents. There shall be one Initial Excavation per work site unless otherwise approved by the Engineer. The following items, if required or as determined by the Engineer, will be paid for under other Contract Pay Items: pipeline point repair, pipeline offset relocation, select backfill material, well point dewatering, by-pass pumping, surface restoration, sheeting for excavations greater than 6-ft deep, and pavement restoration.

The quantity to be paid for under this item shall be the actual number of each (EA) per job assignment for initial excavation made in conjunction with exploration or pipe repair at the various cut ranges listed. The cut for Initial Excavation shall be the average of the pipe cut (grade elevation minus the pipe invert elevation) measured at each end of the trench, which measures 30 feet in length or less in conjunction of pipeline point repair or relocation offset.

PAY ITEM	DESCRIPTION	UNITS
272	Initial Excavation - 0'-6' Deep	EA
273	Initial Excavation - 6'-8' Deep	EA
274	Initial Excavation - 8'-10' Deep	EA
275	Initial Excavation - 10'-12' Deep	EA
276	Initial Excavation - 12'-14' Deep	EA
277	Initial Excavation - 14'-16' Deep	EA
278	Initial Excavation - 16'-18' Deep	EA
279	Initial Excavation - 18'-20' Deep	EA

PAY ITEMS NO. 280 – 287 – ADDITIONAL EXCAVATION

The work consists of furnishing all labor, equipment, materials, traffic control and supervision necessary for the excavation to expose existing pipe as measured in the horizontal plane in excess of the original 30 linear feet included in Initial Excavation pay item. This Pay Item is applicable only in conjunction with, and includes the same work as listed in Pay Items 271-278.

Measurement of payment shall be the actual number of linear feet (LF) per job assignment for additional excavations made in conjunction with exploration of pipeline point repair or relocation offset.

PAY ITEM	DESCRIPTION	UNITS
280	Additional Excavation - 0'-6' Deep	LF
281	Additional Excavation - 6'-8' Deep	LF
282	Additional Excavation - 8'-10' Deep	LF
283	Additional Excavation - 10'-12' Deep	LF
284	Additional Excavation - 12'-14' Deep	LF
285	Additional Excavation - 14'-16' Deep	LF
286	Additional Excavation - 16'-18' Deep	LF
287	Additional Excavation - 18'-20' Deep	LF

PAY ITEMS NO. 288 – 295 – BYPASS PUMPING SETUP & OPERATION

This item provides for set up and operation of by-pass sewage pumping equipment and temporary piping as required and as described in the Standard Technical Specifications. This Pay Item is applicable on projects or repairs that have high flow or require an over night by pass operation.

The quantity to be measured for payment under this Pay Item will be the actual number of by-pass pumping set ups and operations, per part of day, required by the Engineer in the work. The minimum measurement for this pay item is eight (8) hours or 0.333 days and is measured from the time that the sewage is actually by-passed. This eight (8) hour minimum (0.333 days) includes full compensation for set up and operation for up to the first eight (8) hour period. Additional time will be in tenths of the day or twenty-four (24) hour period. The quantities determined shall be paid per day (DAY) or portion of day of by-pass pumping set up and operation.

PAY ITEM	DESCRIPTION	UNITS
288	Wastewater Bypass Pumping, Set up, 6" - 10" diameter	EA
289	Wastewater Bypass Pumping, Set up, 12" - 14" diameter	EA
290	Wastewater Bypass Pumping, Set up, 15" - 21" diameter	EA
291	Wastewater Bypass Pumping, Set up, 24" diameter	EA
292	Wastewater Bypass Pumping, Operation, 6" - 10" diameter	DAY

293	Wastewater Bypass Pumping, Operation, 12" - 14" diameter	DAY
294	Wastewater Bypass Pumping, Operation, 15" - 21" diameter	DAY
295	Wastewater Bypass Pumping, Operation, 24" diameter	DAY

PAY ITEMS NO. 296 – 311 – GRAVITY SEWER POINT REPAIR

This item provides all labor, equipment and materials for the replacement of up to twenty (20) linear feet of gravity sewer pipe with PVC or Ductile Iron pipe (Material as directed by the Engineer at each occurrence). The existing sewer pipe may be Vitrified Clay, PVC, Ductile Iron, Cast Iron, or Concrete gravity sewer main. The work includes repair sleeves, cutting existing pipe, pipe bedding, new replacement pipe, disposal of existing pipe, and reconnection of lateral connections to sewer main. This item also includes maintaining of flow in low flow systems that can be accomplished with up to a four (4) inch mud hog, diaphragm or centrifugal type pump and lay flat hose or temporarily blocking the sewer for a period of time to facilitate the repair. The cost of lengths of pipe greater than twenty (20) linear feet will be paid for under Pay Items 209-324. The work does not include sheeting or well point dewatering which, if required, will be paid for, or is part of the work, under other Pay Items.

The quantity to be paid under this item will be in accordance with each (EA) pipe size to be repaired as noted in the contract pay items.

PAY ITEM	DESCRIPTION	UNITS
296	6" Dia. Pipe Gravity Sewer Point Repair (DI Replacement Pipe)	EA
297	6" Dia. Pipe Gravity Sewer Point Repair (PVC Replacement Pipe)	EA
298	8" Dia. Pipe Gravity Sewer Point Repair (DI Replacement Pipe)	EA
299	8" Dia. Pipe Gravity Sewer Point Repair (PVC Replacement Pipe)	EA
300	10" Dia. Pipe Gravity Sewer Point Repair (DI Replacement Pipe)	EA
301	10" Dia. Pipe Gravity Sewer Point Repair (PVC Replacement Pipe)	EA
302	12" Dia. Pipe Gravity Sewer Point Repair (DI Replacement Pipe)	EA
303	12" Dia. Pipe Gravity Sewer Point Repair (PVC Replacement Pipe)	EA
304	15"/16" Dia. Pipe Gravity Sewer Point Repair (DI Replacement Pipe)	EA
305	15"/16" Dia. Pipe Gravity Sewer Point Repair (PVC Replacement Pipe)	EA
306	18" Dia. Pipe Gravity Sewer Point Repair (DI Replacement Pipe)	EA

307	18" Dia. Pipe Gravity Sewer Point Repair (PVC Replacement Pipe)	EA
308	21" Dia. Pipe Gravity Sewer Point Repair (DI Replacement Pipe)	EA
309	21" Dia. Pipe Gravity Sewer Point Repair (PVC Replacement Pipe)	EA
310	24" Dia. Pipe Gravity Sewer Point Repair (DI Replacement Pipe)	EA
311	24" Dia. Pipe Gravity Sewer Point Repair (PVC Replacement Pipe)	EA

PAY ITEMS NO. 312 – 327 – GRAVITY SEWER POINT REPAIR – ADDITIONAL LENGTH

This item provides all labor, equipment and materials for the additional length of replacement gravity sewer pipe with PVC or Ductile Iron pipe (Material as directed by the Engineer at each occurrence). This Pay Item provides for an additional thirty (30) feet of replacement pipe. This Pay Item is used only in conjunction with Pay Items 295-310 and contains the same work therein described. Pipe point repairs requiring greater than fifty (50) feet of pipe will be constructed under separate Contract Pay Items.

The quantity to be paid under this item will be in accordance with the linear feet (LF) installed above twenty (20) linear for each pipe size to be repaired as noted in the contract pay items.

PAY ITEM	DESCRIPTION	UNITS
312	6" Dia. Pipe Gravity Sewer Point Repair - Additional Length (DI Replacement Pipe)	LF
313	6" Dia. Pipe Gravity Sewer Point Repair - Additional Length (PVC Replacement Pipe)	LF
314	8" Dia. Pipe Gravity Sewer Point Repair - Additional Length (DI Replacement Pipe)	LF
315	8" Dia. Pipe Gravity Sewer Point Repair - Additional Length (PVC Replacement Pipe)	LF
316	10" Dia. Pipe Gravity Sewer Point Repair - Additional Length (DI Replacement Pipe)	LF
317	10" Dia. Pipe Gravity Sewer Point Repair - Additional Length (PVC Replacement Pipe)	LF
318	12" Dia. Pipe Gravity Sewer Point Repair - Additional Length (DI Replacement Pipe)	LF
319	12" Dia. Pipe Gravity Sewer Point Repair - Additional Length (PVC Replacement Pipe)	LF

320	15"/16" Dia. Pipe Gravity Sewer Point Repair - Additional Length (DI Replacement Pipe)	LF
321	15"/16" Dia. Pipe Gravity Sewer Point Repair - Additional Length (PVC Replacement Pipe)	LF
322	18" Dia. Pipe Gravity Sewer Point Repair - Additional Length (DI Replacement Pipe)	LF
323	18" Dia. Pipe Gravity Sewer Point Repair - Additional Length (PVC Replacement Pipe)	LF
324	21" Dia. Pipe Gravity Sewer Point Repair - Additional Length (DI Replacement Pipe)	LF
325	21" Dia. Pipe Gravity Sewer Point Repair - Additional Length (PVC Replacement Pipe)	LF
326	24" Dia. Pipe Gravity Sewer Point Repair - Additional Length (DI Replacement Pipe)	LF
327	24" Dia. Pipe Gravity Sewer Point Repair - Additional Length (PVC Replacement Pipe)	LF

PAY ITEMS NO. 328 – 333 – FORCE MAIN POINT REPAIR

This item provides all labor, equipment and materials for the replacement of up to ten (10) linear feet of pipe and may be used for routine response and emergency repairs at the discretion of the Engineer or his representative. The pipe being repaired may be PVC, HDPE, Ductile Iron, or Cast Iron. All ductile iron pipe shall have polyethylene encasement. The work includes furnishing and installing two full seal clamps, bell joint seal clamps or two solid sleeves, cutting existing pipe, pipe bedding, dewatering for excavations up to 6-ft deep, sheeting for excavations up to 6-ft deep, and disposal of existing pipe. Additional pipe materials over ten (10) linear feet in length will be paid for under Pay Items 191-201. Excavations and well point dewatering for pipeline point repairs are separate pay items.

The quantity to be paid under this item will be in accordance with each (EA) pipe size to be repaired as noted in the contract pay items.

PAY ITEM	DESCRIPTION	UNITS
328	2" Dia. Pipe Forcemain Point Repair	EA
329	4" Dia. Pipe Forcemain Point Repair	EA
330	6" Dia. Pipe Forcemain Point Repair	EA
331	8" Dia. Pipe Forcemain Point Repair	EA
332	10" Dia. Pipe Forcemain Point Repair	EA

333	12" Dia. Pipe Forcemain Point Repair	EA

PAY ITEMS NO. 334 & 335 – REPLACE MANHOLE RING AND COVER

This pay includes replacement of existing manhole rings and covers in roadway paved areas, or other areas, as directed by the Engineer. The work includes all labor, equipment and material for replacement of manhole rings and covers. The work does not include excavation or surface restoration which, if required, will be paid for, or is part of the work, under other Contract Pay Items.

The quantity to be measured for payment under this Pay Item will be the actual number each of manhole ring and covers replaced completed and accepted.

PAY ITEM	DESCRIPTION	UNITS
334	Replace Manhole Ring & Cover (Asphalt Pavement)	EA
335	Replace Manhole Ring & Cover (Unpaved)	EA

PAY ITEMS NO. 336 – 338 – MANOLE BENCH REPLACEMENT

This pay item includes the replacement of manhole benches and invert channels. The work includes all labor, equipment and material for rebuilding existing manhole inverts and benches as described in the Technical Specifications.

The quantity of manhole bench replacement to be measured for payment under this Pay Item will be the actual number each (EA) of manholes that have manhole inverts and benches rebuilt.

PAY ITEM	DESCRIPTION	UNITS
336	Manhole Bench Replacement, 4' Diameter	EA
337	Manhole Bench Replacement, 5' Diameter	EA
338	Manhole Bench Replacement, 6' Diameter	EA

PAY ITEMS NO. 339 & 340 – ADJUST MANHOLE RING AND COVER TO FINISHED GRADE

This item provides all labor, equipment and materials for adjusting existing manhole risers, frames, and covers. Adjustment includes removal of existing ring and cover and removal or placement of up to 6 courses of brick and reinstalling the existing ring and cover. The work does not include excavation, surface restoration, sheeting or well point dewatering which, if required, will be paid for, or is part of the work, under other Pay Items.

The quantities of manhole rim and cover adjustments to be paid under this item shall be each measured in place, on grade, inspected, and accepted.

PAY ITEM	DESCRIPTION	UNITS
339	Adjust Manhole Ring & Cover to Finished Grade (In Pavement)	EA

340	Adjust Manhole Ring & Cover to Finished Grade (Outside of Pavement)	EA

PAY ITEM NO. 341– FLOWABLE CONCRETE FILL

This item provides all labor, equipment, and materials for placing flowable fill per the Technical Specifications. The quantity of Flowable Concrete Fill to be paid under this item shall be per cubic yard measured in place, inspected, and accepted.

PAY ITEMS NO. 342 – 346 - PAVEMENT REPAIR AND ROAD RESTORATION

This item provides all labor, equipment, and materials for the installation of roadway base and surface course per the Technical Specifications and Contract Drawings. Replacement base material shall be the same as the existing base. Measurement will be based on the actual number of cubic yards of Roadway Base and tons of Superpave Asphalt base and concrete installed, tested, completed, and approved. The weight of the Superpave asphalt base and concrete shall be determined from batch weights, truck scale weights or other methods approved by the Engineer. Delivery tickets, in duplicate, signed by a sworn weigher, must accompany each load of material to the project site. One copy of the delivery ticket must be retained by the Contractor and one copy must be delivered to the City Inspector. The total number of tons reflected in one set of all delivery tickets collected by the Inspector must be the measured pay quantity.

PAY ITEM	DESCRIPTION	UNITS
342	Roadway Base, Lime Rock, Primed, Min. LBR 100, Variable Thickness	CY
343	Roadway Base, Crushed Concrete/Graded Aggregate, Min. LBR 100, Variable Thickness	CY
344	Superpave Asphalt Base, Type B 12.5, Variable Thickness	TN
345	Superpave Asphalt Concrete, Type SP 9.5, Fine, Traffic Level C, Variable Thickness	TN
346	Superpave Asphalt Concrete, Type SP 12.5, Fine, Traffic Level C, Variable Thickness	TN

PAY ITEMS NO. 347 - 349 – DRIVEWAY RESTORATION

Payment for all work included under this Pay Item will be made at the Contract unit price bid per square yard of driveway installed as shown in the Contract Drawings and as listed on the Bid Form. Measurement will be based on the actual number of square yards of driveway installed, tested, completed and approved. Payment shall represent full compensation for all labor, materials and equipment for cutting the edges of existing driveways, compacting subgrade, furnishing and installing the shell, asphaltic concrete, concrete, or decorative block and all incidentals necessary to complete the driveway restoration as shown on the Contract Drawings and included in the Specifications. No payment for restoration of a private driveway outside the right-of-way shall be made under this Pay Item.

PAY ITEM	DESCRIPTION	UNITS
347	Pavement, Cement Concrete, 6" Min Thickness (Driveways)	SY
348	Pavement, Cement Concrete, 8" Thick	SY
349	Driveway Restoration, In Kind, Decorative Block	SY

PAY ITEMS NO 350 - 352 – MILLING OF EXISTING ASPHALT

Payment for all work included under this Pay Item will be made at the Contract unit price bid per square yard of asphalt milling within the Contract Drawings and as listed on the Bid Form. Measurement will be based on the actual number of square yards of milling installed, tested, completed and approved. The measurement will be from face of curb to face of curb or as specified, but not greater than the width of the existing roadway prior to construction. Payment will include the milling of the asphaltic concrete in accordance with these Specifications. No payment for milling of a private driveway within or outside the right-of-way shall be made under this Pay Item.

PAY ITEM	DESCRIPTION	UNITS
350	Milling Existing Asphalt Pavement, 1/2" Average Depth	SY
351	Milling Existing Asphalt Pavement, 3/4" Average Depth	SY
352	Milling Existing Asphalt Pavement, 1" Average Depth	SY

PAY ITEMS NO. 353 – 356 – CURB AND GUTTER REPLACEMENT

Payment for all work included in this Pay Item will be made at the applicable Contract unit price bid per linear foot for removal of existing curbing and for furnishing and placing FDOT Type D or F curb and gutter, Miami curb, or Valley gutter as shown on the Contract Drawings and listed on the Bid Form. Measurement will be per actual number of linear feet of curbing installed. Payment shall represent full compensation for removal of existing curb and all labor, material and equipment for compacting subgrade, forming, furnishing, placing the concrete, and finishing as specified and all incidentals necessary for completion of this Pay Item, in accordance with FDOT specifications.

PAY ITEM	DESCRIPTION	UNITS
353	Curb & Gutter, Concrete, FDOT Type D	LF
354	Curb & Gutter Concrete, FDOT Type F	LF
355	Curb & Gutter, Concrete, Miami Curb	LF
356	Valley Gutter, Concrete, PCED Index 1315	LF

PAY ITEMS NO. 357 & 358 – CONCRETE SIDEWALKS

Payment for all work included under this Pay Item will be made at the Contract unit price bid per square foot of concrete sidewalk installed as shown in the Contract Drawings and as listed on the

Bid Form. Measurement of sidewalk restoration will be per the actual number of square feet of sidewalk replaced. Payment shall represent full compensation for all labor, materials and equipment for cutting the edges of existing concrete, compacting subgrade, furnishing and installing the concrete and all incidentals necessary to complete the sidewalk restoration as shown on the Contract Drawings in accordance with FDOT Specifications where applicable.

PAY ITEM	DESCRIPTION	UNITS
357	Sidewalk, Concrete, 4" Min. Thickness, Remove and Replace	SF
358	Sidewalk, Concrete, 6" Min. Thickness, Remove and Replace	SF

PAY ITEM NO. 359 – SODDING

Payment for all work included under this Pay Item will be made at the Contract unit price bid per square yard of sod installed as shown in the Contract Drawings and as listed on the Bid Form. Measurement of sodding will be per the actual number of square yards of sod installed. Payment shall represent full compensation for all labor, materials and equipment for furnishing and installing the sod and all incidentals necessary to complete the work as shown on the Contract Drawings in accordance with FDOT Specifications where applicable.

END OF SECTION

THIS PAGE INTENTIONALLY LEFT BLANK

SECTION 3 - SUBMITTALS

3.01 GENERAL

When used in the Contract Documents, the term "Shop Drawings" shall be considered to mean Contractor's plans for material and equipment which become an integral part of the Project. These drawings shall be complete and detailed. Shop Drawings shall consist of fabrication, drawings, setting drawings, schedule drawings, manufacturer's scale drawings and wiring and control diagrams. Cuts, catalogs, pamphlets, descriptive literature and performance and test data, shall be considered only as supportive to required Shop Drawings as defined above.

Data on materials and equipment shall include, without limitation, materials and equipment lists, catalog sheets, cuts, performance curves, diagrams, materials of construction and similar descriptive material. Materials and equipment lists shall give, for each item thereon, the name and location of the supplier or manufacturer, trade name, catalog reference, size, finish and all other pertinent data. Submittal distribution will be by electronic submittal as coordinated during the Preconstruction Conference.

3.02 CONTRACTOR RESPONSIBILITIES

The Contractor shall submit to the City and Engineer for review and acceptance: working drawings, shop drawings, test reports and data on materials and equipment, and material samples (hereinafter in this section called samples) as are required for the proper control of work, including, but not limited to those working drawings, shop drawings, data and samples for materials and equipment specified elsewhere in the Specifications and in the Contract Drawings.

Drawings and schedules shall be checked and coordinated with the work of all trades involved before they are submitted for review by the City and the Engineer and shall bear the Contractor's stamp of approval and original signature as evidence of such checking and coordination. Drawings or schedules submitted without this stamp of approval and original signature shall be returned to the Contractor for resubmission.

If drawings show variations from Contract requirements because of standard shop practice or for other reasons, the Contractor shall describe such variations in his letter of transmittal. If acceptable, proper adjustment in the contract shall be implemented where appropriate. If the Contractor fails to describe such variations, he shall not be relieved of the responsibility of executing the work in accordance with the Contract, even though such drawings have been reviewed.

For all mechanical and electrical equipment furnished, the Contractor shall provide a list including the equipment name and address and telephone number of the manufacturer's representative and service company so that service and/or spare parts can be readily obtained.

All manufacturers or equipment suppliers who proposed to furnish equipment or products shall submit an installation list to the City along with the required shop drawings. The installation list shall include at least five installations where identical equipment has been installed and have been in operation for a period of at least one (1) year.

No materials or equipment shall be ordered, fabricated or shipped or any work performed until the Engineer reviews and returns to the Contractor the submittals as acceptable according to the

submittal review codes in Section 3.04.

3.03 SUBMITTAL NUMBERING

When submitting shop drawings or samples, utilize a unique numbering system of the Contractors choice. Subsequent resubmittals of a revised submittal shall be denoted with a letter, A-Z, indicating the resubmission of the same drawing (i.e. A=2nd submission, B=3rd submission, C=4th submission, etc.).
An example of a submittal numbering would be as follows: Submittal No. 5A - HDPE Pipe 6.03

1. 5A is the second submission of the 5th shop drawing submitted for the project
2. HDPE Pipe is the subject of the submittal
3. 6.05 is the Specification Section for HDPE Pressure Pipe

3.04 SUBMITTAL REVIEW

Submittals shall be transmitted in sufficient time to allow the Engineer at least twenty (20) working days for review and processing. The review of shop drawings, data and samples will be for general conformance with the design concept and Contract Documents. An acceptance of a submittal shall be interpreted to mean that the Engineer has no specific objections to the submitted material, subject to conformance with the Contract Drawings and Specifications. This is not to be construed as permitting any departure from the Contract requirements, relieving the Contractor of responsibility for any errors, including details, dimensions, and materials, or approving departures from details furnished by the City, except as otherwise provided herein.

Submittals will be returned to the Contractor under one (1) of the following codes:

A. "NO EXCEPTIONS TAKEN" is assigned when there are no notations or comments on the submittal. When returned under this code the Contractor may release the equipment and/or material for manufacture.
B. "CORRECTIONS NOTED". This code is assigned when a confirmation of the notations and comments IS NOT required by the Contractor. The Contractor may release the equipment or material for manufacture; however, all notations and comments must be incorporated into the final product.
C. "REVISE AND RESUBMIT". This code is assigned when notations and comments are extensive enough to require a resubmittal of the package. The Contractor may release the equipment or material for manufacture; however, all notations and comments must be incorporated into the final product. This resubmittal is to address all comments, omissions and non-conforming items that were noted. Resubmittal is to be received by the Engineer within 15 Calendar Days of the date of the Engineer's transmittal requiring the resubmittal.
D. “REJECTED" is assigned when the submittal does not meet the intent of the Contract Documents. The Contractor must resubmit the entire package revised to bring the submittal into conformance. It may be necessary to resubmit using a different manufacturer/vendor to meet the Contract Documents.
E. “Filed as Received” is assigned when the submittal is for informational purposes only. No review or comments will be provided by the Engineer.

END OF SECTION

SECTION 4 – AS-BUILT DRAWINGS

4.01 MINIMUM AS-BUILT DRAWING STANDARDS FOR ALL AS-BUILT DRAWINGS

For all elements of construction, As-Built Drawings shall be submitted to at least the level of detail in the contract documents. It is anticipated that the original contract documents shall serve as at least a background for all record information. Original drawings in CAD format may be requested by the City.

Project data points shall contain both horizontal and vertical data relative to the FL Florida State Plane, West Zone, US Foot. Vertical datum is NAVD 1988. All elevations shall be in feet and tenths, referenced to NAVD 1988. Each sheet of the As-Built Drawings shall have the title “AS-BUILT DRAWING” printed in large bold lettering near the title block and a date corresponding to the date the as-built drawing was issued. As-Built Drawings notes, and information shall be bold or italics to identify them as As-Built information.

4.02 AS-BUILT DRAWINGS PREPARATION

The As-Built Drawings shall show the name, address, and phone number of the Contractor. Each drawing shall be certified by a responsible representative of the Contractor and dated. As-built information shall be recorded currently with construction progress and work shall not be concealed until required information is recorded. Properly prepared As-Built Drawings shall be certified by a Professional Engineer or Surveyor registered to the state of Florida, employed by the Contractor.

The As-Built Drawings shall at a minimum legibly include the following:

A. All underground piping with elevations and dimensions. Changes to piping location. Horizontal and vertical locations of underground utilities and appurtenances referenced to permanent surface improvements. Actual installed pipe material, size, class, etc.

B. Locations of drainage ditches, swales, water lines and force mains shall be shown every 200 feet (measured along the centerline). Dimensions at these locations shall indicate distance from centerline of right-of-way to the facility.

C. All horizontal locations, if not in the right-of-way, must relate to easement.

D. Field changes of dimension and detail.

E. Changes made by Field Order or by Change Order.

F. Details not on original Contract Drawings.

G. Equipment and piping relocations.

H. Locations of all valves, air release valves, fire hydrants, manholes, water and sewer services, water and force main fittings, underdrain cleanouts, catch basins, junction boxes

and any other structures located in the right-of-way or easement, shall be located by elevation and by station and offset based on intersection P.I.'s and centerline of right-of-way. For facilities located on private roads, the dimensioning shall be from centerline of paving or another readily visible baseline.

I. Elevations shall be provided for all manhole rim and inverts; junction box rim and inverts; catch basin rim and inverts; and baffle, weir and invert elevations in control structures. Elevations shall also be provided at the PVI's and at every other lot line or 200 feet, whichever is less, of drainage swales and ditches. Benchmarks and elevation datum shall be indicated.

J. Slopes for pipes and ditches shall be recalculated, based on actual field measured distances, elevations, pipe sizes, and type shown. Cross section of drainage ditches and swales shall be verified.

K. Centerline of roads shall be tied to right-of-way lines. Elevation of roadway centerline shall be given at PVI's and at all intersections.

L. As-Built Drawings shall show bearings and distances for all right-of-way and easement lines, and property corners.

M. Sidewalks, fences, and walls, if installed at the time of initial as-built drawing submittal, shall be located every 200 feet or alternate lot lines, whichever is closer. Dimensions shall include distance from the right-of-way line and the back of curb and lot line or easement line.

N. Allowable tolerance shall be ± 6.0 inches for horizontal dimensions. Vertical dimensions such as the difference in elevations between manhole inverts shall have an allowable tolerance of ± 1/8 inch per 50 feet (or part thereof) of horizontal distance up to a maximum tolerance of ± 2 inch.

Specifications and Addenda shall be legibly marked to record manufacturer, trade name, catalog number and supplier of each product and item of equipment actually installed and changes made by Field Order or by Change Order.

4.02.01 REQUIREMENTS FOR RECLAIMED WATER MAINS AND FORCE MAINS

In addition to that specified above, the following information shall be provided on the As-Built Drawings.

A. Location (vertical and any horizontal) at intervals not to exceed two hundred (200) feet and at all locations where the direction changes by more than ten (10) degrees.

B. Pipe size, material, and dimension ratio.

C. Location of air release valve.

D. Detailed location of valves (horizonal).

E. Elevations shall be provided on the top of operating nuts for all water and force main valves.

F. Reclaimed water service connection location based on distance from main line and property line for each designed meter.

G. Horizontal Directional Drilling (HDD) locations and elevations shall be shown on the As-Built Drawings. The beginning, ending, and surface locations shall be indicated as well as the horizontal and vertical location at least every 25 linear feet along the pipe as provided in the HDD Contractor's certified report and bore log.

All top of pipe elevations shall be accompanied by a finished grade elevation at the same location. Horizontal location of the pipe shall be defined using ties to back of curb and nearest property corner, property line or permanent control point.

4.02.02 REQUIREMENTS FOR GRAVITY SEWER

In addition to that specified above, the following information shall be provided on the As-Built Drawings.

A. Manhole rim and invert elevations (include pipe inverts).

B. Manhole horizontal location (i.e. dimension from right-of-way line or permanent control point.)

C. Service laterals located from the nearest downstream manhole. These dimensions shall be provided by on-site inspections or televising of the sewer following installation.

D. Distance between manholes.

Size and material of all pipe.

4.02.03 REQUIREMENTS FOR WASTEWATER PUMP/LIFT STATIONS

In addition to that specified above, the following information shall be provided on the As-Built Drawings.

A. Location ties back to back of curb and nearest property corner or permanent control point.

B. Wet well invert elevations.

C. Pipe invert elevations.

D. Valve vault inverts.

E. Top of slab elevations.

F. Pump make and model, horsepower, impellor size, design point.

G. Operating set point elevations

4.03 AS-BUILT DRAWINGS SUBMITTAL

Prior to substantial completion and prior to starting the bacteria testing of water lines, Contractor shall deliver electronic As-Built Documents and As-Built Drawings to the City and the Engineer for review. If there are any required changes or additions, these shall be completed and resubmitted for review. Signed and sealed As-Built Documents and As-Built Drawings shall be submitted prior to final pay application to the City and the Engineer, both electronically and in hard copy paper format. Up to six (6) copies shall be provided at the City's request.

The Contractor shall employ a Professional Engineer or Surveyor registered in the State of Florida to verify survey data and properly prepare As-Built Drawings. As-Built Drawings shall be certified by the professional(s) (Engineer or Surveyor licensed in Florida), as stipulated by the Land Development Ordinance and submitted in electronic format and up to six (6) hardcopies signed and sealed by a Florida registered surveyor and mapper.

AutoCAD drawings shall be in DWG or DXF form. All fonts, line types, shape files, external references, or other pertinent information used in the drawing and not normally included in AutoCAD shall be included on the media with a text file or attached noted as to its relevance and use.

Accompany submittal with transmittal letter, containing:

A. Date.
B. Project title.
C. Contractor's name and address.
D. Title and number of each As-Built Document.
E. Signature of Contractor or his authorized representative.

Note: The data required to properly prepare these As-Built Drawings shall be obtained at the site, at no cost to the City by the responsible design professional or his/her duly appointed representative. The appointed representative shall be a qualified employee of the responsible design professional or a qualified inspector retained by the responsible design professional on a project-by-project basis.

END OF SECTION

SECTION 5 - CONCRETE, MASONRY, AND REINFORCING STEEL

5.01 GENERAL

The Work in this section includes furnishing, placing, finishing, and curing all reinforced and plain concrete, prestressed concrete, reinforcing steel, welded wire fabric, brick, masonry block, mortar, and related work. Brick used for paving and hexagon block used for sidewalks are not included in this section.

5.02 PORTLAND CEMENT CONCRETE

Portland cement concrete shall conform to the applicable requirements of the FDOT-SSRBC Sections 346, 347, and 921.

Class IV concrete shall be used for all concrete in contact with, or over, salt or brackish water.

Concrete used for structures in contact with sewage shall be mixed from Type II Portland cement containing the lowest calcium thiosulfate available as specified in AASHTO M 85.

Concrete shall meet the following minimum 28-day compressive strength:

Miscellaneous concrete (thrust blocks, pipe encasement, etc.)	2,500 psi
Concrete curb/gutter/sidewalk/pavement	3,000 psi
Cast-in-place/precast structures	4,000 psi
Prestressed structures	5,000 psi

5.03 REINFORCING STEEL

Reinforcing steel shall conform to ASTM A 615, Grade 60 deformed bars and to the applicable requirements of FDOT-SSRBC Sections 415 and 931.

Reinforcing steel shall not be coated, except as specifically specified on the Contract Drawings.

All welded wire fabric shall conform to ASTM A 497 (deformed) or ASTM A 185 (plain) and to the applicable requirements of FDOT-SSRBC Article 415-6.

5.04 FIBROUS CONCRETE REINFORCEMENT

Fibrous concrete reinforcement may be used, where shown or approved, in lieu of welded wire fabric for shrinkage and thermal contraction/expansion in concrete pavement, driveway, and sidewalk.

Fibrous concrete reinforcement shall conform to ASTM C 1116, ASTM C 94, and ASTM E 119-83.

Fibrous concrete reinforcement shall be 100 percent virgin polypropylene fibrillated material mixed with concrete at a minimum of 1.5 pounds per cubic yard of concrete.

5.05 PLACEMENT OF REINFORCEMENT

Reinforcing steel placement shall conform to the applicable requirements of FDOT-SSRBC Articles 350-7 and 415-5.

The following minimum concrete cover shall be provided for all reinforcement:

Concrete cast against and permanently exposed to earth	3-inch
Concrete exposed to earth or weather	
Primary reinforcement	2-inch
Stirrups, ties, and spirals	1 1/2-inch
Concrete deck slabs, top and bottom	2-inch
Concrete not exposed to earth or weather	
Primary reinforcement	1 1/2-inch
Stirrups, ties, and spirals	1-inch

For bundled bars, the minimum concrete cover shall be equal to the equivalent diameter of the bundle, but need not be greater than 2-inch, except against and permanently exposed to earth, in which case the minimum cover shall be 3-inch.

Minimum concrete cover shall be increased in corrosive environment areas.

5.06 PLACEMENT OF CONCRETE

Placement of Portland cement concrete shall conform to the applicable requirements of FDOT-SSRBC Article 400-7.

Unless specific permission is granted prior to each occurrence, no concrete shall be delivered to the job site before 7:30 a.m. or after 4:30 p.m. No concrete shall be placed until the reinforcing steel placement has been inspected and approved by the Engineer.

5.07 CURING OF CONCRETE

Curing of Portland cement concrete shall conform to the applicable requirements of FDOT-SSRBC Article 520-8.

5.08 FINISHING OF CONCRETE

Finishing of Portland cement concrete shall conform to the applicable requirements of FDOT-SSRBC Article 400-15.

5.09 CONCRETE BRICK

Concrete brick for use in drainage structures and where shown on the Contract Drawings shall be approximately 3 5/8-inch by 7 5/8-inch by 2 1/4-inch in size and shall conform to ASTM C 55, Grade N-II or S-II.

5.10 CLAY BRICK

Brick shall be sound, hard, and uniformly burned regular and uniform in shape and size or compact texture and conforming to ASTM C 32, "Specification for Sewer and Manhole Brick (Made from Clay or Shale) Grade MS or MM."

5.11 MASONRY BLOCK

Load bearing units shall be hollow or solid, as shown on the Contract Drawings, and shall conform to ASTM C 90, Type I, 8-inch by 16-inch or 4-inch by 16-inch nominal face dimension.

Non-load bearing units shall conform to ASTM C 129, Type I, 8-inch by 16-inch or 4-inch by 16-inch nominal face dimension.

Horizontal continuous joint reinforcement shall be provided at every other joint. Reinforcement shall be a minimum of #9 gage steel, Grade 50. Wire shall be hot-dip galvanized, conforming to ASTM A 153, Class B-2 (1.5 ounce per square foot of wire surface) for zinc coating after prefabrication into units. Mortar coverage shall be not less than 5/8-inch on joint faces exposed to exterior, and not less than 1/2-inch elsewhere.

5.12 MORTAR

Mortar shall consist of a mixture of cementitious materials, aggregate, and water. All proportions shall be by volume and/or weight. Masonry cement shall conform to ASTM C 91 and C 270. Fine aggregate and Portland cement shall conform to the applicable requirements of FDOT-SSRBC Sections 902 and 921 respectively. Mortar shall have a minimum compressive strength of 1,500 psi.

5.13 GROUT

Grout shall be identical to mortar in all respects.

END OF SECTION

THIS PAGE INTENTIONALLY LEFT BLANK

SECTION 6 – EXCAVATION AND BACKFILL

6.01 GENERAL

The Work in this section includes furnishing all labor, materials, tools, and equipment for excavation and backfill of roadways, sidewalks, curbs, driveways, pipelines, and structures. The Work also includes removing and disposing of leftover material and furnishing and placing off-site fill.

Bidders shall examine the site of the Work, make their own additional soil borings and tests, and make their own determination of the character of materials and the conditions to be encountered on the Work; their Bid shall be based upon their own investigation.

6.02 TRENCH SAFETY

The Contractor shall be responsible for maintaining safety at each excavation. The Contractor shall adhere to the Florida Trench Safety Act (FS 90-96), OSHA trench excavation safety standards (29 CFR, Subpart P, 1926.650), and OSHA trench excavation shielding, sloping, or sheeting requirements. Inspections required by OSHA trench excavation safety standards shall be provided by the Contractor's "competent person," as defined by OSHA 29 CF, Subpart P, 1926. The Contractor's "competent person" shall be identified at the Preconstruction Conference.

The Contractor certifies by submitting the bid and subsequently executing this Contract, that all trench excavation done within his control shall be accomplished in strict adherence with OSHA trench safety standards, the Florida Trench Safety Act, and public safety.

The Contractor also agrees to produce or obtain, prior to award of the subcontracts, identical certification from subcontractors who will perform trench excavation, and to retain such certification for at least 3 years following Final Acceptance.

The Contractor shall consider all available geotechnical information when designing the trench excavation safety system. If sufficient geotechnical information is not available, the Contractor may obtain such to support the requirements set forth above, at no additional cost to the City.

6.03 WORK IN WETLANDS, MANGROVES, AND PRESERVATION AREAS

Strict adherence to all permits is required. Damage to wetlands, periodically wet areas, mangroves, and preservation areas is prohibited. Any such damage by the Contractor shall be duly rectified at no additional cost to the City and as approved by the regulatory agencies.

6.04 CLEARING AND GRUBBING

All clearing and grubbing Work shall conform to all applicable requirements of FDOT-SSRBC Section 110 "Clearing and Grubbing" except as modified herein.

The Contractor shall remove only those trees and bushes necessary to complete the specified Work. Not all the trees and bushes have been located or shown on the Contract Drawings. The Contractor shall flag those trees and bushes to be removed. All other trees and bushes shall be protected per Specifications.

All roots, stumps, and other debris shall be removed to a depth not less than 12 inches below a bearing surface. The disturbed surface shall be backfilled, graded, and compacted as specified.

No tree or bush shall be removed without the review and acceptance of the Engineer. The Contractor shall obtain all necessary City or County permits for each tree to be removed. Tree removal shall conform to the provisions of the Specifications.

6.05 ROADWAY EXCAVATION

The extent of excavation shall be as shown on the Contract Drawings or otherwise approved by the City and shall include roadway excavation and/or filling and grading, together with the removal of trees, bushes, existing asphalt, concrete, or other material, as required to facilitate construction and restoration as directed by the City.

All excavation Work shall conform to all applicable requirements of FDOT-SSRBC Section 120 “Excavation and Embankment” except as modified herein.

6.06 TRENCH EXCAVATION

Mechanical excavation shall be terminated at least 2 inches above the proposed pipe bed and trench bottom, then shaped and compacted so as to provide uniform bearing on the barrel of the pipe. Particular care shall be taken to recess the bottom of the trench at the bell of the pipe to relieve the bell of all load.

A minimum trench width shall be maintained, allowing room for the jointing and proper compaction of the backfill. If material is encountered that is unsuitable in the opinion of the Engineer, it shall be removed by the Contractor and replaced with acceptable material compacted in place as specified. In the event the Contractor excavates below the elevation required without approval, the Contractor shall backfill with approved materials compacted to obtain a suitable trench bottom, all to the satisfaction of the Engineer and at no additional cost to the City.

The amount of open trench shall be limited so that no more than 100 feet of open trench in advance of the backfilling operation will remain at the end of that working day. All open trench shall be protected by the Contractor with barriers, warning devices, and traffic control devices, which shall be kept in the correct position, properly directed, anchored when required, and clearly visible at all times. The barriers, warning devices, and traffic control devices shall be suitably lighted at all times when vehicular traffic lights are required.

6.07 STRUCTURE EXCAVATION

Excavation shall be of the size and depth required for construction of structures and their foundations. Unsuitable material encountered shall be removed to the depth required to obtain sound foundation material or as ordered by the Engineer. Over-excavated areas shall be filled with approved backfill material compacted as specified, at no additional cost to the City.

Unsuitable existing soil shall be removed and replaced with compacted material, as approved by the Engineer and as specified in the subsection herein headed "Excavation of Unsuitable Material."

6.08 EXCAVATION OF UNSUITABLE MATERIAL

Unsuitable material shall include rock, concrete, and boulders. Unsuitable soft material shall include logs, muck, other soft soils, organic soils, and other soils as specified or as ordered by the Engineer to be unsuitable.

All excavation of unsuitable material shall conform to all applicable requirements of FDOT-SSRBC Section 120 “Excavation and Embankment” except as modified herein.

Unsuitable material encountered below or within the roadway stabilized subgrade, the trench bottom, or a structure bottom, shall be removed by the Contractor to the limits established by the Engineer and disposed of from the Work area at an approved disposal area. Unsuitable material shall be replaced with approved material and compacted as specified.

No additional payment will be made for backfill material obtained from any source and used to replace any unsuitable material except as otherwise specified.

6.09 SHEETING, SHIELDING, AND SLOPING

All excavations shall be properly sheeted, shielded, or sloped to the required slope to furnish safe working conditions, to prevent shifting of material, to prevent damage to structures or other Work, and to avoid delay to the Work, all in accordance with applicable safety and health regulations. The minimum sheeting and shielding for trench excavations shall meet the general trenching requirements of the Florida Trench Safety Act and OSHA standards.

The sheeting and shielding shall be of adequate strength and quantity for the purpose intended. Any sheeting extending below the level of above the top of pipeline shall be cut off as ordered by the Engineer and left in place. In addition, the Engineer may order the Contractor to cut off and leave in place any sheeting, shielding, or other approved support where required to protect construction, property, or existing facilities or utilities.

Damages resulting in the installation or removal of sheet piling shall be rectified by the Contractor at no additional cost to the City.

6.10 DEWATERING

A. All pipeline and appurtenances shall be laid entirely in a dry trench. All foundations and structure walls shall be constructed or installed in a dry excavation.

B. Before commencing any excavation at the site of the Work, the Contractor shall submit to the Engineer for review, the methods, equipment, and arrangement of facilities proposed for dewatering and disposal of water at the site and of all water entering any excavation or other part of the Work from any source whatsoever.

C. Water discharged from dewatering equipment shall be carried into surface drainage facilities except water quality treatment systems and shall not be discharged into sanitary sewer lines. The Contractor shall prevent water from puddling in streets or on private properties. The depositing of dirt in storm drains and ditches and staining of existing facilities shall not be permitted.

D. Adequate standby facilities shall be provided to ensure that the excavation will be kept dry in the event of power failure or mechanical breakdown. Facilities for the removal and disposal of water shall be of sufficient capacity to keep the excavation dry under all circumstances with one-half of the facilities out of service. If well points are used, provision shall be made for removing and resetting individual well points without taking the system of which they are a part out of service.

E. The City reserves the right to require the Contractor to replace noisy equipment in order to keep disturbance to a minimum.

F. The cost of dewatering and disposal of water shall be included in the unit quantity for each appropriate item bid.

G. Refer to the Specifications for requirements concerning encountered groundwater contaminates.

6.11 BORROW MATERIAL

Any borrow excavation Work shall consist of the excavation and satisfactory utilization of material from areas provided by the Contractor when necessary material is not available from the normal excavation or grading operations. This Work shall conform to DOT-SSRBC Section 120 “Excavation and Embankment” except as modified herein.

If additional fill material is required, it shall be City approved material supplied and compacted by the Contractor. All compaction under roadway, alley, driveway, curb, walk, or other improved surface shall be to a density as specified in the Contract Documents. Unless otherwise directed by the City, all material not required for construction shall be removed from the premises and disposed of by the Contractor.

6.12 BEDDING MATERIAL

A. Where shown, ordered, or required, the Contractor shall place bedding material prior to placing pipelines, structures, or slabs. Bedding material may be either excavated approved native sand, concrete sand, gravel, or reclaimed concrete.

B. Off-site bedding material shall be sand or gravel. Sand bedding material shall be a clean concrete sand of uniform gradation between sieve sizes No. 4 and No. 50. All particles shall pass a 3/8-inch sieve and no particles shall pass a No. 100 sieve.

C. Gravel bedding material shall meet the requirements of ASTM C33 and shall be coarse aggregate, DOT Size No. 67 (3/4-inch to No. 4) or approved equal.

D. Reclaimed concrete bedding material shall be graded to meet the size requirements as specified for gravel bedding.

E. Bedding material, where required, shall be placed in lifts and compacted in a manner to achieve the specified density as specified and/or as shown.

F. If gravel bedding is used, an impermeable groundwater barrier shall be placed at 100-foot intervals in the gravel bedding. The impermeable groundwater barrier shall consist of a 10

mil sheet of polyethylene covering the full cross sectional area of the gravel, embedded 6 inches into the trench sides and bottom, and extending to the top of the gravel. The barrier shall be offset a minimum of 2 feet from any culvert or pipe joint. Ends and splice points shall be lapped a minimum of 12 inches.

6.13 STRUCTURAL SLAB BEDDING

Structural slabs for manhole bases, footings, and similar structures shall be placed on approved compacted bedding material and leveled as specified and/or as shown.

6.14 BACKFILL MATERIAL

Backfill material shall consist of earth, loam, sandy clay, sand, gravel, soft shale, or other materials, free from organic materials, large clods of earth, or stones. Backfill material shall be either soil classification A-1, A-2 or A-3, per AASHTO M-145, and shall be free of organic matter, lumps of clay or marl, muck, compressible materials, and rock exceeding 2.5 inches in diameter. Broken concrete, masonry, rubble or other similar materials shall not be used as backfill.

6.15 BACKFILL COMPACTION

All backfill shall be compacted as specified herein and shall meet the following minimum density as determined by the AASHTO T-180 method for backfill outside the right-of-way and in City streets, and by the AASHTO T-99 method if in County or FDOT right-of-way.

AASHTO T-180 Method C or D will be used for stabilized subgrade and base compaction tests, and Method A or B will be used for backfill testing, or as directed by the Engineer or jurisdiction.

	T-180	T-99
Roadway stabilized subgrade	98%	N/A*
Roadway base	98%	N/A*
Curb base	98%	N/A
Sidewalk and driveway base	98%	N/A
Pipe bedding	98%	100%
Pipe backfill - under pavement	98%	100%
Pipe backfill - under grass	95%	100%
Structure base slabs	100%	N/A
Structure backfill	98%	N/A

*Roadway stabilized subgrade and base material shall meet LBR requirements as specified in the Contract Documents.

6.16 BACKFILLING OF TRENCH

Backfilling shall be accomplished with suitable material and shall commence only after the pipelines have been laid and tentatively accepted by the City. The space between the pipe and the sides of the trench shall be packed full by hand-shoveled earth free from lumps or debris.

The backfill material shall be placed in 6-inch lifts and compacted, using approved tampers to the required compaction, to a point 12 inches over the top of the pipe. The remaining backfill (under areas other than roadways) shall be placed in uniform lifts not greater than 12 inches thick (or less as approved for mechanical equipment available) and tamped to the required compaction. Backfill under roadways shall be compacted in 6-inch lifts.

Where trenches are improperly backfilled, or where settlement occurs, the trenches shall be reopened to the depth required for proper compaction, refilled and compacted, and the surface restored to the grade and compaction, mounded over and smoothed off.

6.17 BACKFILLING STRUCTURES

Backfill around structures shall be of suitable job-excavated material, suitable off-site fill material, or other material approved by the Engineer. Such backfill shall extend from the bottom of the excavation or top of bedding to the bottom of pavement base course, the bottom of the subgrade for lawns or lawn replacement, the top of the existing ground surface, or to such other grades as may be shown or required.

The backfill shall be placed in uniform lifts not greater than 12 inches thick, and thoroughly compacted in place.

6.18 BACKFILLING UNDER ROADWAYS

Backfill placed under roadways and other paved surfaces shall be compacted in 6 -inch lifts and thoroughly compacted in place, with suitable equipment as specified herein.

6.19 DISPOSING OF LEFTOVER MATERIAL

The Contractor shall bring the surface to the same level as existed prior to the excavation. All leftover material shall be hauled from the site and disposed of by the Contractor. Leftover material shall not be stored in or along rights-of-way or easements.

6.20 ADJACENT FACILITIES

The Contractor shall be responsible for the protection, removal, and replacement of all adjacent structures, utilities, trees, shrubbery, curbs, culverts, headwalls, fences, signs, and other miscellaneous structures encountered during the course of the Work.

6.21 TEMPORARY SUPPORTS

Temporary supports for 16-inch and larger pressure and gravity pipes shall be designed by the Contractor and submitted to the City as required by Specifications. Temporary supports that include a structural beam, or other such member(s), shall be designed, signed and sealed by a Professional Engineer.

6.22 FLOWABLE FILL

Where shown on the Contract Drawings, or where ordered by the Engineer, the Contractor shall backfill a void area or an excavation with flowable fill. Flowable fill may be shown, or ordered, to fill

abandoned pipes, abandoned underground steel storage tanks, trench backfill, washout area under structural slabs or behind walls, or other similar locations.

Flowable fill shall be produced and delivered to the site. Placing of flowable fill shall be by chute, pumping, or other approved methods. Flowable fill shall be placed to the designated fill line without vibration. The Contractor shall take all necessary precautions to prevent any damage caused by hydraulic pressure of the fill during placement prior to hardening. Flowable fill shall not be used for pipe bedding and backfill in the zone from the bottom of a pipe to 12 inches above the top of pipe.

Flowable fill shall consist of materials conforming to FDOT-SSRBC Sections as follows:

Cement (Type I or II)	Section 921	"Portland Cement and Blended Cement"
Fly ash (Type F)	Section 929	"Fly Ash, Slag, Microsilica and Other Pozzolanic Materials for Portland Cement Concrete"
Fine aggregate (sand)	Section 902	"Fine Aggregate"
Water	Section 923	"Water for Concrete"

The Contractor shall submit a proposed design mix that will produce a flowable fill meeting the strength requirements specified herein, using the following materials:

	Pounds per cubic yard
Cement (Type I or II)	50 - 200
Fly ash (Type F)	0 - 2,000
Fine aggregate (sand)	2,500 - 3,000
Water	325 - 550
Note: 6-inch to 10-inch slump	

Flowable fill material shall be proportioned to produce a 28-day compressive strength approximately as follows:

	Pounds per square inch
Pipe trench backfill	50 - 150
Fill abandoned pipes or tanks	30 - 150
Under slabs, behind walls	300 - 1000
Note: Density in place 115 to 145 pounds per cubic foot.	

Not more than 60 minutes shall elapse between the start of moist mixing and the placement of the flowable fill.

Flowable fill placed on slopes shall have a reduced slump with a reduction in water and shall be able to be shaped as required.

The Contractor shall place the flowable fill in such a manner as to eliminate all cavities.

Flowable fill shall not be placed in salt water. When within a tidal area, the flowable fill shall be placed immediately after the salt water has receded.

When flowable fill is used adjacent to ductile iron pipe, the pipe shall be polyethylene encased.

END OF SECTION

SECTION 7 - SURFACE RESTORATION

7.01 GENERAL

The Work in this section includes restoring and maintaining pavements and pavement bases, curbing, sidewalks, driveways, and grass surfaces that are disturbed, damaged, or destroyed during the course of the Work under this Contract.

The quality of workmanship and materials used in the restoration shall produce a surface equal to or better than the condition before the Work began.

Prior to restoration, the Contractor shall saw cut and remove all existing pavement within 2 feet of the edge of the excavation, or within such widths as may be ordered by the Engineer.

Compaction of soil and base materials shall be tested using the AASHTO T 180 method.

Surface restoration workmanship and materials shall conform to the applicable sections of the FDOT-SSRBC.

All dirt areas disturbed shall be restored with sod, unless otherwise specified.

7.02 ROADWAY RESTORATION

Where the installation of pipe or structures occurs within an existing roadway, the limits of excavation shall be saw cut leaving a straight and square edge. The upper portion of the trench backfill shall be replaced with a compacted shell, crushed (reclaimed) concrete, or limerock base as shown on the Contract Drawings, and paved to match the surrounding surface. Replacement base material shall be the same as the existing base. Roadway restoration shall conform to the detail for shown in the Contract Drawings.

7.03 TEMPORARY PAVEMENT

Immediately upon completion of backfilling, the pavement surfaces damaged or destroyed shall be temporarily restored by placing a shell (FDOT-SSRBC Section 911), crushed (reclaimed) concrete (FDOT-SSRBC Section 204 applicable sections), or limerock (FDOT-SSRBC Section 911) base on the backfilled, compacted subgrade, and an adequate temporary asphaltic patch as shown or as approved by the Engineer. Shell crushed (reclaimed) concrete, or limerock shall be used as a base for all bituminous pavements.

Temporary work shall be maintained in a suitable and safe condition for traffic until the permanent pavement is laid or until final acceptance of the Work.

7.04 SHELL BASE

Shell base shall be constructed on the prepared subgrade to not less than 98 percent of maximum density, in accordance with the requirements of FDOT-SSRBC Section 911. The minimum compacted thickness of shell base shall conform to the detail shown on the Contract Drawings.

7.05 LIMEROCK BASE

Limerock base shall be constructed on the prepared subgrade to not less than 98 percent of maximum density, in accordance with the requirements of FDOT-SSRBC Section 911. The minimum compacted thickness of limerock base shall conform to the detail shown on the Contract Drawings.

7.06 CRUSHED (RECLAIMED) CONCRETE BASE

Crushed (reclaimed) concrete base shall be constructed on the prepared subgrade to not less than 98 percent of maximum density, in accordance with the requirements of FDOT-SSRBC Section 204. The minimum compacted thickness of crushed (reclaimed) concrete base shall conform to detail shown on the Contract Drawings.

The minimum limerock bearing ratio (LBR) value shall be 150.

7.07 ASPHALTIC CONCRETE PAVEMENT

A prime coat shall be applied to the prepared base in accordance with FDOT-SSRBC Section 300 prior to permanent asphaltic concrete pavement.

Unless specified elsewhere, all permanent asphaltic concrete pavement replacement shall be constructed in accordance with the requirements of FDOT-SSRBC Sections 320, 330, 334, and 337. Surface types and compacted thickness shall conform to the detail shown on the Contract Drawings.

7.08 BRICK PAVEMENT

Construction of brick pavement shall follow the details as shown on the Contract Drawings and City standard practice using City standard paving brick or red clay brick conforming to ASTM C 32, Grade SS with City standard dimensions.

Brick street abutting asphalt pavement shall have a minimum 6-inch-wide flush Type A Header Curb.

7.09 CURB AND GUTTER

All permanent restoration of street curb, or curb and gutter, shall be of the same type and thickness as the curb, or curb and gutter, which abuts. The grade of the restored curb, or curb and gutter, shall conform to the grade of the existing adjacent curb, or curb and gutter, so that positive drainage is maintained.

7.10 CONCRETE SIDEWALK

The restoration and construction of concrete sidewalks shall conform to applicable requirements of FDOT-SSRBC Section 522 and the Contract Drawings and shall be constructed where shown on the Contract Drawings and directed by the City. Sidewalk expansion joints with bituminous filler shall be installed at a maximum of 50-foot intervals on center and struck joints shall be spaced equidistant with walk width (joints wider than 6 feet shall be spaced as directed by the City). Where

new construction is to be tied into existing facilities, the old material is to be removed back to the nearest construction joint, or sawcut to a straight line as directed by the City or Engineer. The soil under sidewalks and driveways shall be compacted to 98 percent of the maximum density.

New sidewalks shall be 4 inches thick. Concrete pour for walk construction shall be made only on dampened subgrade. A soft broom finish shall be given the walk surface as directed by the Engineer.

Sidewalks crossing driveways shall be constructed according to the Specifications for concrete driveways.

Curb ramps for physically handicapped shall be constructed at all locations where sidewalks cross the curb or where directed by the Engineer. Those existing sidewalks which are removed to accomplish associated work as a part of this Project shall be replaced with a curb ramp when the sidewalk crosses the curb. The cost of curb ramps shall be included in the appropriate proposal item for sidewalk restoration.

Where sidewalks are replaced, the replacement shall be the full width of the walk and the minimum length shall be 60 inches. Restoration of adjacent lawn is incidental to sidewalk replacement and no separate payment will be made therefore.

7.11 HEXAGON BLOCK SIDEWALK

The restoration and construction of hexagon block sidewalks shall conform to the details shown on the Contract Drawings and City standard practice using City standard hexagon blocks.

The soil under sidewalks and driveways shall be compacted to 98 percent of the maximum density. New hexagon block sidewalks shall be 2 inches thick.

Curb ramps for physically handicapped shall be constructed at all locations where sidewalks cross the curb, or where directed by the City or Engineer. Those existing sidewalks which are removed to accomplish associated work as a part of this Project shall be replaced with a curb ramp when the sidewalk crosses the curb. The cost of curb ramps shall be included in the appropriate Pay Item for sidewalk restoration.

Where sidewalks are replaced, the replacement shall be the full width of the walk. Restoration of adjacent grass is incidental to sidewalk replacement and no separate payment will be made therefore.

7.12 DRIVEWAY AND PARKING LOT

Except as otherwise specified, all permanent restoration of base and surface of driveways, parking aprons, and sidewalks shall match the materials, thicknesses, elevations, lines, and grades of the existing construction, all to the Engineer's satisfaction. Patching of Portland cement driveway areas will not be allowed between joints or dummy joints.

For areas where streets are to be paved, or where more than 50 percent of the driveway apron is disturbed, concrete or brick driveways shall be replaced in kind. All other driveways, including shell

and dirt, shall be restored with an asphalt concrete surface from the street to the property line or front of sidewalk, as directed by the City or Engineer.

All base compaction under driveways shall be to a minimum density of 98 percent of the maximum density.

7.13 DRIVEWAY - ASPHALT

Residential asphalt driveway restoration shall include 1-inch thick asphaltic concrete surface over 2 inches of compacted sand-asphalt hot mix base, or 5 inches of compacted limerock or shell base.

Commercial asphalt driveway restoration shall be constructed of 1-inch thick asphaltic concrete surface over 8 inches of limerock base compacted in 2 lifts.

7.14 DRIVEWAY - CONCRETE

The restoration and construction of concrete driveways shall conform to applicable requirements of FDOT-SSRBC Section 522 and the Contract Drawings and shall be constructed where shown on the Contract Drawings and directed by the City or Engineer.

Residential concrete driveway restoration shall be 5 inches thick and shall include placing a single layer of 6-inch by 6-inch wire mesh (WWF 6 x 6 - W1.4 x W1.4).

Commercial concrete driveways shall be 6 inches thick with a double layer of 6-inch by 6-inch wire mesh (WWF 6 x 6 - W1.4 x W1.4).

7.15 DRIVEWAY - PEAGRAVEL

Where less than 50 percent of the driveway apron is disturbed, pea gravel driveways shall be restored to match the existing driveway. Pea gravel driveway restoration shall include asphalt treated shell base 5 inches thick after compaction to a minimum density of 98 percent of the maximum.

7.16 DRIVEWAY - SHELL

Where less than 50 percent of the driveway apron is disturbed, shell driveways shall be restored to match the existing driveway. Shell driveway restoration shall be 5 inches thick after compaction to a minimum density of 98 percent.

7.17 GRASS

7.17.01 Sodding

Sod shall be planted as soon as practical after paving, pipeline, or other work has been completed. Sodding shall always be used over seeding.

All work and materials shall meet the applicable requirements FDOT-SSRBC Section 570 (Sodding).

Sodding shall be done as directed by the Engineer, using only material which, in the opinion of the Engineer, is healthy and free of weeds, and (unless specified otherwise by the Engineer) of the same variety predominating at time of removal. Sod may be St. Augustine, Bahia, or other varieties as selected by the Engineer.

Sod shall be planted within 72 hours of being cut. Only moist, green sod having a virile root system may be planted. Sod shall be cut into adjacent sod to provide a smooth surface, and "top dressed" where necessary. Sod shall be rolled or tamped after planting to provide a uniform and consistent grade.

7.17.02 Grass Maintenance

The Contractor shall properly water and otherwise maintain all seeded and sodded areas for a minimum of 60 consecutive calendar days after completion of sodding operations. After the 60 days, and upon receipt of written request from the Contractor, the Engineer will inspect the areas for acceptance by the City. Any area that is washed or eroded, fails to show a uniform stand of healthy, vigorous grassing, or does not appear to be otherwise developing satisfactorily, shall be re-sodded and maintained until suitable for acceptance by the Engineer.

In the event that the stand of grass is found to be contaminated by weeds or other undesirable growth, the Contractor will be required to effectively eliminate such undesirable growth at his own expense.

7.18 EXPANSION JOINT MATERIAL

Expansion joint material for concrete pavement surfaces, including sidewalks and driveways, shall be the bituminous strip type, 1/2-inch thick, and shall conform to applicable requirements of FDOT-SSRBC Section 932.

END OF SECTION

THIS PAGE INTENTIONALLY LEFT BLANK

SECTION 8 – PAINTING

8.01 GENERAL

Painting materials not obtainable from the prime manufacturer shall be obtained from a second source recommended by the prime manufacturer for compatibility. All products furnished shall meet current Federal Regulations for lead, mercury and other heavy metals, as well as current VOC air quality regulations. Products of the following acceptable manufacturers may be used on this project, except where noted otherwise.

A. Ameron – Corrosion Control Division
B. Devoe & Raynolds Company
C. Indurall
D. KopCoat –RPM
E. MAB Paints
F. PPG Industries, Inc.
G. Rust-Oleum Corporation
H. Sherwin-Williams
I. Tnemec Company, Inc.

The Contractor shall paint or provide a protective coating for all interior and exterior wood and metal surfaces, all interior masonry, valves, and all submerged piping and other metal, whether specifically called for or not. In addition, all exposed piping shall be painted and further identified in accordance with other sections of these specifications. Because of their very nature, some areas or items do not require specific painting or coating for protection or appearance. The following generally do not require painting or coating unless specifically noted otherwise or required by manufacture, color coding, insulation from dissimilar metals, insulation from concrete or cement products, or architectural considerations:

A. Non-Ferrous Alloys:

Aluminum
Monel
Stainless Steel

B. Corrosion Resistant Metals:

Chromium Plated Steel
Weathering Steel
Galvanized Steel

C. Non-Metallic Materials:

Exterior Brick
Concrete
Glass

	Plastic &FRP
	PVC
	Porcelain
Pre-Finished Manufactured Items:	Cabinets
	Louvers
	Motor Control Centers
	Panels
	Signs and Nameplates
	Switchgear
	Switchboards
	Transformers
	Tile

D. Electrical Conduits Attached to Unpainted Surfaces.

E. Insulation and Insulation Jackets.

All exposed piping and conduit within the fence enclosure shall be color-coded in accordance with the following Color Coding Schedule:

A.	Electric	Gray
B.	Gas, Oil, Dangerous Materials	Red
C.	Telephone, Telegraph, Television, Communications	Safety Alert Orange
D.	Potable Water	Safety Blue
E.	Treated Sewage	Safety Green

Other paint colors will be selected by the Engineer

All materials shall be pure and first quality. Materials listed shall be the standard for each such type of material. Primers and finish coats shall be compatible and of the same manufacture where possible. Emulsion and alkyd paints shall contain a mildewcide, and both the paint and mildewcide shall conform to OSHA and Federal requirements, including Fed. Spec. TT-P-19. Paint and protective coating materials shall be sealed in containers that plainly show the designated name, formula or specification number, batch number, color, date of manufacture, manufacturer's directions, and name of manufacturer, all of which shall be plainly legible at the time of use. Pigmented paints shall be furnished in containers not larger than five (5) gallons. Materials shall conform to the specifications shown herein and to the requirements hereinafter specified.

To the maximum extent possible, all products shall be the product of one manufacturer unless a specific specialty coating system is specified. Without exception, all coatings for any service condition specified herein shall be by one manufacturer. Once a paint manufacturer has been selected by the Contractor and approved by the Engineer, the Contractor shall ensure that all

equipment manufacturers prime their equipment with the same or a compatible primer. If this cannot be or is not done for any reason, the Contractor shall apply a "universal primer" and recoat with the approved manufacturer's product in the field.

8.02 SUBMITTALS

Submittals shall be in accordance with the following:

A. Samples. Prepare and submit for Engineer's approval copies of color samples on 8-1/2" x 11" size cards for each paint and protective coating system. Each sample card shall clearly show each coat of the finish system, and shall be clearly marked with the manufacturer's name and product identification, and shall be submitted in sufficient time to allow for approval and, if necessary, disapproval and resubmittal without causing any delay of the project.

B. Coating Materials List.
   1. The Contractor shall provide copies of a paint and coating materials list which indicates the manufacturer and paint number, keyed to the coating schedule herein, for approval by the Engineer prior to or at the time of submittal of samples required herein.
   2. The Contractor shall include with his submittal, his protective coating schedule for shop and field coatings of items to receive protection. The schedule shall conform to the specified requirements for surface preparation, priming, and coating for items covered, and shall follow the same requirements for similar work where such work has not been specifically called-out. No bare ferrous nonworking surfaces shall be omitted from the schedule. Particular care shall be taken to cover in sufficient detail the coating of mechanical joints and other mechanical devices which shall conform to the recommended practice of the manufacturer of the joint or other mechanical devices.
   3. Coatings to be used on plastic and fiberglass materials shall be certified as acceptable by all plastic and fiberglass manufacturers whose products are to be coated. Certification copies shall be submitted to the Engineer. The Contractor shall be certified in writing by the painting and coating material manufacturers as qualified applicators of their products with copies of the certification submitted to the Engineer.

C. Product Data Sheets. Contractor shall submit paint and coatings material manufacturers' printed technical data sheets for products intended for use in each paint and coating system. Data sheets shall fully describe material as to its intended use, makeup, recommended surface preparation and application conditions, primers, material mixing and application (including recommended dry mil thickness recoat time), precautions, safety and maintenance cleaning directions.

D. Material Safety Data Sheets. Material Safety Data Sheets (MSDS) shall accompany all paint submittals and shall be prominently displayed at the job site during all painting activities.

8.03 PAINTING SCHEDULES AND SYSTEMS

Painting and coating of surfaces shall conform to the following schedules and systems, unless otherwise specified or shown on the drawings:

A. Schedule A: System 1 – Exposed exterior structural and miscellaneous steel, piping, equipment to include all stainless steel and carbon steel electrical control cabinets non-submerged, not exposed to corrosion, splash, fumes or immersion conditions.

1. Prime: One sprayed coat of a combination of a two-part epoxy primer, gray, of 3.0 mils, minimum dry film thickness as by Devoe Paints, Tru-Glaze Epoxy Primer Nos. 12735 and 12702 (ratio 19:1) or equal. If shop coat is damaged, re-prime bare areas in the field. The exterior of electrical cabinets, in stainless steel, shall be sand-blasted and spray-primed per the paint manufacturer's instructions.

2. Finish: Two coats of "hanging moss green" (Devoe Paints FX-70), Semi-Gloss Advanced Technology Acrylic Resin of 1.5 to 2.0 mils, dry thickness as Exterior Waterborne Semi-Gloss Enamel #83XX by Devoe Paints, or equal. Coats to be applied by spray painting in the shop.

B. Schedule B: System 2 – Piping and pumping equipment – submerged or non-submerged, exposed to spray, splash or corrosive atmosphere, excluding chains and sprockets, and stainless steel bracing in the wetwell:

1. Prime: One coat chemical resistant red iron oxide, based on a polyamide cured epoxy resin, minimum of 3.0-5.0 mils dry film thickness as by Devoe Paints, Devron 201. If shop coat is damaged, re-prime bare areas in the field.

2. Finish: Two coats of polyamide cured, epoxy resin coating, minimum of 4.0-6.0 mils dry film thickness per coat as by Devoe Paints, Devron 224HS-color, moss green as required above.

D. Schedule C; System 3 - Coating aluminum and non-ferrous metal surfaces, including undersides of aluminum access hatches, frames, and checkered plate, subject to corrosive atmosphere and condensation

1. Surface Preparation: Clean non-ferrous surfaces in accordance with 26 SSPC-SP7 (brush-off blast cleaning)
2. Prime: Minimum 3.0 mil DFT (Tnemec Primer – Series 66)
3. Finish: Minimum 4 mil DFT for a minimum total dry mil thickness of 7 mils (Tnemec Finish Coat – Series 66)

8.04 EXECUTION

All painting shall be done by skilled and experienced craftsmen and shall be of highest quality workmanship. Application of materials shall be done only on properly prepared surfaces as herein specified.

Before commencing work, the painter shall make certain that surfaces to be covered are in good condition. Should the painter find such surfaces not to be totally acceptable for covering, he shall report such fact to the Engineer. The application of paint shall be held as acceptance of the surfaces and working conditions and the painter will be held responsible for the results reasonably expected from the materials and processes specified.

Only compatible materials shall be used in the work. Particular attention shall be directed to compatibility of primers and finish coats. If necessary, subject to approval of the Engineer, a compatible barrier coat shall be applied between all existing prime coat and subsequent field coats to ensure compatibility. Ductile iron pipe that has an exterior bituminous coating shall not be painted unless the bituminous coating is removed by sand blasting or an appropriate, compatible, intermediate coat is applied before top coating in accordance with this specification

Hardware, hardware accessories, machined surfaces, nameplates giving manufacturer's data, cover plates, grease fittings, lighting fixtures and similar items in contact with painted surfaces and not to be painted shall be removed, masked, or otherwise protected prior to surface preparation and painting operations so they remain clean and free from paint.

Ferrous metals (not shop primed) shall be sandblasted per SSPC-SP6 to remove mill scale and rust. Ferrous surfaces to be submerged or exposed to spray, splash, fumes or corrosive atmosphere shall be sandblasted to near-white metal blast cleaning according to SSPC-SP 10. Brush blast or clean other metals as appropriate to provide suitable surface. Surface profile as obtained from sandblasting shall be recommended by the coating manufacturer. All metal surfaces shall be completely degreased by solvent cleaning in compliance with SSPC-SP 1.

Galvanized surfaces shall be cleaned of dirt, grease and other foreign substances and solvent cleaned. Surfaces shall be pro-treated with one coat of proprietary acid bound resinous or crystalline zinc phosphate preparation, used in accordance with the manufacturer's directions.

Remove glaze, of florescence, dirt, loose particles and grease (and existing paint, if applicable) from concrete receiving masonry paint. Fill all cracks, cut out defective joints and repaint.

In addition to the above listed surface preparations, all dirt, rust, scale, splinters, loose particles, disintegrated paint grease, oil and other deleterious substances shall be removed from all surfaces that are to be coated.

Work shall be done only under favorable weather conditions and as recommended by paint supplier. Exterior painting shall be done only in dry weather. Any surface coating damaged by moisture or rain shall be removed and redone as directed by the Engineer. Coatings shall be mixed, thinned, tinted and applied in accordance with the manufacturer's recommendations. The Contractor shall tint or match colors as selected by the Owner. A sample shall be applied on the job for review and approval before work is actually done. No thinners shall be used except those specifically mentioned and only in such quantity as directed by the manufacturer's instructions. If thinning is used, sufficient additional coat shall be applied to assure the required dry film thickness is achieved.

The manufacturer's recommended thinner or cleanup solvent shall be used for all cleanup. Application by brush, spray, airless spray or roller shall be as recommend by the manufacturer for

optimum performance and appearance. Paint shall be applied in a neat manner with finished surface free of runs, sags, ridges, laps and brush marks.

Each coat shall be applied in a manner that will produce an even film of uniform and proper thickness, and no variation in sheen or color. Where more than one coat of paint is specified, each coat shall be sufficiently tinted to result in a perceptible difference in shades of the various coats of paints so that the application of subsequent coats can be properly and uniformly spread and inspected. Provision shall be made to allow thorough drying between coats as recommended by the manufacturer before the next coat is applied, and paint used in successive field coats shall be produced by the same manufacturer.

Seal coats shall be used over bitumen-coated surfaces as applicable. Plastic pipe shall be painted in accordance with the pipe manufacturer's recommendations. Pipes, shoot metal ducts and other metal items which are to be installed in inaccessible locations shall be painted prior to installation.

Pumps, motors, machinery, equipment, electrical panels and other manufactured items shall have surfaces prepared, primed and coating in accordance with the recommendations of the manufacturer, and be given at least one touch-up coat with the intermediate coat material and one compete finish cost in the field.

The prime and intermediate coats for the various coating systems shall be as specified earlier and shall be compatible with the field coat or coats. Paint used in the first field coat over shop painted or previously painted surfaces shall cause no wrinkling, lifting or other damage to underlying paint.

All completed surfaces will be checked by the Engineer, and the Contractor shall provide the necessary properly calibrated gages. All non-ferrous surfaces shall be checked for number of coats and thickness by use of a Tooke gage. All ferrous surfaces shall be checked for film thickness by use of Elcometer or Micro-Test magnetic dry film gauge properly calibrated. . The Engineer shall have the right to reject all material for work that is unsatisfactory and require the replacement of either or both at the expense of the Contractor.

All paint brushed, splattered, spilled, or splashed on any surface not specified to be painted shall be removed. Upon completion of the painting work, the Owner shall be furnished one (1) gallon of each type and color of finish paint for touching up at no additional cost. Paint container labels, in addition to other required information, shall have location of color and type marked thereon.

Surfaces to be painted shall be inspected before any paint materials are applied, and after preparation has been completed.

Painted surfaces shall be inspected between coats, prior to application of next coat of painting material. Failure to get acceptance between coats will nullify credits for coats previously applied.

All paint shall be delivered to the job site in unopened original containers.

All paint not intended for the job shall be removed from the job site.

END OF SECTION

SECTION 9 - PIPING MATERIALS: DUCTILE IRON PIPE AND FITTINGS

9.01 GENERAL

The Work in this section includes furnishing all ductile iron pipe, fittings, joints, and appurtenant materials. All castings furnished shall have been cast in the United States of America unless complete certification is furnished in accordance with the latest edition of ANSI/AWWA C 110.

Standards referenced in this section are the latest revision of the following specifications:

ANSI/AWWA C104	"Cement Mortar Lining for Ductile-Iron Pipe and Fittings for Water"
ANSI/AWWA C110	"Ductile-Iron and Gray Iron Fittings, 3-Inch through 48-Inch, for Water and Other Liquids"
ANSI/AWWA C111	"Rubber-Gasket Joints for Ductile-Iron and Pressure Pipe and Fittings"
ANSI/AWWA C115	"Flanged Ductile-Iron Pipe with Threaded Flanges"
ANSI/AWWA C150	"Thickness Design of Ductile-Iron Pipe"
ANSI/AWWA C151	"Ductile-Iron Pipe, Centrifugally Cast, for Water or Other Liquids"
ANSI/AWWA C153	"Ductile-Iron Compact Fittings, 3-Inch through 24-Inch, for Water and Other Liquids"
ASTM D 1248	"Polyethylene Plastics Molding and Extrusion Materials"

9.02 PIPE

9.02.01 GENERAL

All ductile iron pipe shall be designed in accordance with ANSI/AWWA C150. Pipe shall be minimum pressure class as follows:

Size	Pressure Class
3-inch through 18-inch	350
20-inch through 24-inch	300
30-inch through 48-inch	200

For threaded flanged pipe the minimum thickness shall be the nominal thickness as shown on Table 15.1 of ANSI/AWWA C115.

Thickness shall be designed for a flat-bottom trench backfill lightly consolidated to centerline of pipe. Pipe shall be manufactured in accordance with ANSI/AWWA C151.

The pressure rating, metal thickness class, net weight of pipe (without lining) length of pipe, name of manufacturer, "DI" or "DUCTILE," and country where cast, shall be clearly marked on each length of pipe.

The Contractor shall take extreme care when handling pipe and fittings to ensure the interior lining does not get damaged during construction. Lined pipe and fittings must be handled only from the outside of the pipe and fittings. No forks, chains, straps, hooks, etc. shall be placed inside the pipe and fittings for lifting, positioning, or laying. The pipe shall not be dropped or unloaded by rolling.

Care should be taken not to let the pipe strike sharp objects while swinging or being off loaded. Ductile iron pipe should never be placed on grade by use of hydraulic pressure from an excavator bucket or by banging with heavy hammers.

9.02.02 LINING

A. **Potable Water Lines and Reclaimed Water Lines**: Ductile iron pipe and fittings for use in potable and reclaimed water lines shall be cement mortar lined. Cement lining shall conform to ANSI/AWWA C104, and seal coated with approved bituminous seal coat in accordance with ANSI/AWWA C151. Seal coating shall be UL listed or NSF approved for use in potable water mains.

B. **Sanitary Force Mains and Gravity Sanitary Pipe**: Ductile iron pipe and fittings for sanitary sewer force mains and gravity sewer pipe shall be polyethylene, polyurethane, or epoxy lined.

   Epoxy lining shall be 40 mil minimum thickness (multi-pass process) and shall be Protecto 401 Ceramic Epoxy, as manufactured by the Protecto Division of Vulcan Painters, Inc., or approved equal.

   Polyethylene lining shall be factory furnished with a fusion bonded polyethylene liner of 60 mil minimum thickness conforming to ASTM D1248, such as Polybond Plus as furnished by American Cast Iron Pipe Co. or approved equal.

   Polyurethane lining shall be factory applied conforming to Corropipe, as manufactured by Madison Chemical Industries, Inc., or an approved equal. Material shall be applied in conformance with the manufacturer's recommendation and shall be a 40-mil final dry film thickness.

   For any lining method, to ensure a holiday-free lining, documentation must be provided, prior to shipment, showing each section of lined pipe has passed holiday testing at the time of production per ASTM G62. The lining shall have a minimum three (3) year warranty covering failure of the lining and bond failure between liner and pipe.

C. **Storm Drain Gravity Pipe**: Ductile iron pipe and fittings for storm drain gravity pipe shall be epoxy lined as per sanitary pipe or cement mortar lined as per water pipe, at the Contractor's option.

9.03 FITTINGS

Ductile iron fittings shall conform to ANSI/AWWA C110 or ANSI/AWWA C153.

Fittings shall be suitable for a minimum water pressure plus water hammer as follows:

Size	Type	Pressure Rating
3-inch through 12-inch	DI	350
14-inch through 24-inch	DI	350
30-inch through 48-inch	DI	250

Fittings shall be coated outside with petroleum asphaltic coating, 1 mil minimum thickness.

Fittings shall be lined as specified herein headed "4.02 Pipe."

Anchor couplings equal to McWayne Clow F-1211 for fire hydrant assemblies may be substituted with an anchoring tee equal to Catalog No. A-10180 locked hydrant tee as manufactured by American Ductile Iron Pipe Co. or hydrant tee with rotatable MJ gland as manufactured by U.S. Pipe Co. in place of the MJ tee and anchor coupling as shown, at the Contractor's option.

9.04 JOINTS - BURIED PIPE AND FITTINGS

Joints for ductile iron pipe and fittings shall conform to ANSI/AWWA C111, except as otherwise specified. All pipe and fittings shall be furnished complete with joint accessories necessary for installation conforming to ANSI/AWWA C111. No additional payment will be made for joint accessories, including retainer glands, unless otherwise specified.

When deflection is required the joint shall be completed prior to setting the deflection. The deflection shall conform to applicable AWWA Standards or manufacturer's recommendation with prior Engineer's approval.

The Contractor shall furnish and install all necessary materials, equipment, and appurtenances required to complete the work.

A. **Unrestrained Joints**: Joints for unrestrained pipe shall be push-on joint. Joints for fittings, when installed with unrestrained pipe, shall be mechanical joint with DI retainer glands, as specified herein for restrained joints.

B. **Restrained Joints**: All joints in restrained pipe systems shall be of the same type (pipe and fittings), except valves shall be mechanical joint with DI retainer glands as specified.

1. **12-inch and Smaller**: Joints for restrained pipe and fittings, 12-inch and smaller, shall be one of the following:

a. Push-on restrained joint utilizing a retainer ring, equal to U.S. Pipe TR Flex. It shall be UL listed, FM approved, or shall be certified by an approved laboratory that the restrained joint will not separate at the specified test pressure.

b. Push-on restrained joint using a locking type gasket, equal to Field-Lok, as manufactured by U.S. Pipe and Foundry, Inc. It shall be UL listed, FM approved, or shall be certified by an approved laboratory that the restrained joint will not separate at the specified test pressure.

c. Mechanical joint with DI retainer glands shall be furnished with retainer glands equal to Series 1100 Megalug, as manufactured by EBAA Iron Inc., Stargrip 3000 as manufactured by Star Pipe Products, or DI MJ Gripper Gland as manufactured by U.S. Pipe and Foundry Co. for use with ductile iron pipe. All retainer glands shall be UL listed, FM approved, or shall be certified for 350 psi pressure rating with a 2:1 safety factor.

2. **Larger than 12-inch**: Joints for restrained pipe and fittings larger than 12-inch shall be as follows:

   a. Restrained pipe joints shall be modified push-on restrained joint, equal to U.S. Pipe TR Flex, and shall be UL listed or FM approved.

   b. Fittings joints shall be equal to U.S. Pipe TR Flex or shall be mechanical joint with DI retainer glands. Retainer glands shall be equal to Series 1100 Megalug or Stargrip 3000 for 16-inch and larger pipe. All retainer glands shall be UL listed, FM approved, or certified for 350 psi pressure rating (for 16-inch) and 250 psi pressure rating (for larger than 16-inch) with a 2:1 safety factor.

   c. Valve joints shall be mechanical joint with DI retainer glands as specified herein for larger than 12-inch fittings joints.

9.05 JOINTS - EXPOSED PIPE AND FITTINGS

Joints for exposed ductile iron pipe and fittings shall be restrained, except as otherwise noted on the Contract Drawings. Joints for exposed pipe in plants and in vaults shall be flanged where noted on the Contract Drawings.

Joints for exposed pipe and fittings 12-inch and smaller shall be modified push-on restrained joint using a retainer ring, or modified push-on joint using a locking type gasket, as specified herein headed "4.04 Joints - Buried Pipe and Fittings."

Joints for exposed pipe and fittings larger than 12-inch shall be modified push-on restrained joint using a retainer ring as specified herein headed "4.04 Joints - Buried Pipe and Fittings."

9.06 DETECTION

Pipe shall have 3-inch detectable metallic tape of the proper color placed directly above the pipe and 12-inch below finished grade or 6-inch detectable tape between 12-inch and 24-inch below finished grade.

Pipe shall also have tracer wire installed along the pipe alignment. The tracer wire to be used shall be a solid, 10-gauge, high strength, copper clad steel wire with a polyethylene jacket of appropriate color manufactured by Copperhead Industries or approved equal.

9.07 ZINC/EPOXY/FLUOROPOLYMER PROTECTIVE COATING

Joints and Pipe exposed to extreme coastal environments including, but not limited to, aerial ocean crossings shall have this system or an approved equal applied as a protective coating.

Surface Preparation: SSPC-SP6/NACE No.3 Commercial Blast Cleaning with a minimum 1.5 mil angular anchor profile.

Tnemec	Coating Thickness
Primer: Series 90-97 Tneme-Zinc	2.5 - 3.5 mils
2nd Coat: Series 66HS Hi-Build Epoxoline	3.0 - 6.0 mils

3rd Coat: Series 700 Hydroflon	2.0 - 3.0 mils

Total Dry Film Thickness: 7.5 - 12.5 mils

Minimum Dry Film Thickness: 9.5 mils

END OF SECTION

THIS PAGE INTENTIONALLY LEFT BLANK

SECTION 10 - PIPING MATERIALS: PVC PRESSURE PIPE

10.01 GENERAL

The Work in this section includes furnishing all Polyvinyl Chloride (PVC) pressure pipe and fittings. PVC pressure pipe includes all PVC pressure pipe 2-inch through 36-inch.

Standards referenced in this Section are the latest revision of the following specifications:

ANSI/AWWA C900-16	"Polyvinyl Chloride (PVC) Pressure Pipe and Fabricated Fittings, 4 In. Through 60 In."
ANSI/AWWA C110	"Ductile-Iron and Gray-Iron Fittings, 3-Inch through 48-Inch for Water"
ANSI/AWWA C111	"Rubber-Gasket Joints for Ductile-Iron Pressure Pipe and Fittings"
ANSI/AWWA C153	"Ductile-Iron and Gray-Iron Fittings, 3-Inch through 48-Inch for Water"
ASTM D 1784	"Standard Specification for Rigid Poly (Vinyl Chloride) (PVC) Compounds and Chlorinated Poly (Vinyl Chloride) (CPVC) Compounds"
ASTM D 1785	"Standard Specification for Poly (Vinyl Chloride) (PVC) Plastic Pipe, Schedules 40, 80, and 120
ASTM D 2241	"Standard Specification for Poly (Vinyl Chloride) (PVC) Pressure-Rated Pipe (SDR Series)"
ASTM D 3139	"Standard Specification for Joints for Plastic Pressure Pipes Using Flexible Elastomeric Seals"

10.02 PIPE

A. **Two-inch Pipes**: All 2-inch PVC pipe shall meet ASTM D 1784 specification for rigid PVC compounds and ASTM D 2241 specification for PVC plastic pipe. PVC pipe shall be suitable for use at maximum hydrostatic working pressure of 160 psi at 73°F. Pipe shall have a standard dimension ratio (SDR) 26 and bear the NSF Seal for potable water pipe.

B. **4-inch Through 36-inch Pipes**: PVC pressure pipe 4-inch through 36-inch shall meet the requirements of ANSI/AWWA C900-16, with outside diameter dimensions of ductile iron pipe. All 4-inch through 36-inch PVC pressure pipe shall be Class 235 and DR18.

C. **UV Resistant PVC Pipe**: All PVC piping exposed to sunlight shall contain titanium dioxide for UV resistance, and shall conform to ASTM D 1784 and ASTM D 1785 (IPS). The Contractor shall submit the manufacturer's certificate of conformance to the City. Pipe shall be marked with manufacturer's identification.

10.03 FITTINGS

A. **Two-inch Pipes**: Gasketed joint standard dimension ratio (SDR) 21 PVC or galvanized steel fittings shall be used with all 2-inch PVC pipe. PVC adapters, Harco as manufactured by the Harrinton Corporation or approved equal, shall be used for jointing to 2-inch gate valves, galvanized fittings, and existing threaded pipe.

B. **Four-inch Through 36-inch Pipes**

1. **Molded PVC Pressure Fittings**: Fittings for 4-inch through 8-inch sanitary sewer pressure pipe shall be molded PVC pressure fittings, unless DI fittings are directed by the Engineer. Molded PVC fittings shall meet the requirements of ANSI/AWWA C900-16 and shall be Harco Class 150 as manufactured by the Harrington Corporation, or approved equal, as directed by the Engineer.

2. **DI Fittings**: Fittings for pipe larger than 8-inch shall be DI, mechanical joint. DI fittings for 4-inch through 36-inch PVC pressure pipe shall conform to ANSI/AWWA C110 or C153 and shall conform to the Technical Specifications section headed "Piping Materials: Ductile Iron Pipe and Fittings."

C. Where flanged fittings are shown, specified, or directed by the Engineer, adapter flanges shall be used on plain end PVC pipe. Adapter flanges shall be suitable for PVC pipe and be equal to Uni-Flange Series 900 as manufactured by Ford/Uni-Flange, Wabash, Indiana.

10.04 JOINTS

Pipe joints shall be plain end, rubber gasket push-on joints, unless otherwise shown. Push-on joints shall meet the requirements of ASTM D 3139.

Joints to DI fittings shall be rubber gasket mechanical joints with retainer glands, unless otherwise shown. All retainer glands shall be UL listed or FM approved. The retainer glands shall be installed in accordance with the manufacturer's recommendations.

When deflection is required the joint shall be completed prior to setting the deflection. The deflection shall conform to applicable AWWA Standards or manufacturer's recommendation with prior Engineer's approval.

Mechanical joints shall meet the requirements of ANSI/AWWA C111.

10.05 DETECTION

Pipe shall have 3-inch detectable metallic tape of the proper color placed directly above the pipe and 12-inch below finished grade or 6-inch detectable tape between 12-inch and 24-inch below finished grade.

Pipe shall also have tracer wire installed along the pipe alignment. The tracer wire to be used shall be a solid, 10-gauge, high strength, copper clad steel wire with a polyethylene jacket of appropriate color manufactured by Copperhead Industries or approved equal.

10.06 MARKINGS AND COLOR CODING

In addition to the standard markings required by ANSI/AWWA C900-16, the letters NSF denoting National Sanitation Foundation approval shall be included in the marking system, on each pipe length and fitting.

PVC pipe shall be manufactured of solid color as specified, or white with continuous colored ink lettering. The applicable color codes, with light color stabilant, are as follows:

Pipe Use	Color Coding
Potable Water	Safety Blue
Sanitary Sewer	Safety Green
Reclaimed Water	Safety Purple

UV resistant PVC pipe shall be solid color as specified above, or white with colored lettering as specified above.

10.07 HARNESSING

Ductile iron fittings with mechanical joints used with PVC pipe that require harnessing, shall be provided with ductile iron retainer glands such as Series 2000 PV Megalug as manufactured by EBAA Iron Inc., Stargrip 4000 as manufactured by Star Pipe Products, or approved equal.

PVC push-on joints for pipe in casings, for joints to PVC pressure fittings, or where shown, shall be harnessed using a ductile iron retainer for push-on joint PVC pipe, such as Series 1600 as manufactured by EBAA Iron Inc., Series 1100 as manufactured by Star Pipe Products, or approved equal.

10.08 INSPECTION AND TESTING

All pipelines shall remain undisturbed for 24 hours to develop complete strength at all joints. All pipelines shall be subjected to a hydrostatic pressure and leak test per the Specifications.

END OF SECTION

THIS PAGE INTENTIONALLY LEFT BLANK

SECTION 11 - PIPING MATERIALS: HDPE PRESSURE PIPE

11.01 SCOPE OF WORK

The Contractor shall furnish all labor, materials, equipment and incidentals required to install polyethylene pressure pipe, fittings and appurtenances as shown on the Contract Drawings and specified in the Contract Documents and these Standards.

Newly installed pipe shall be kept clean and free of all foreign matter & gouges.

All pipe shall be correctly color coded / identified.

11.02 QUALIFICATIONS

All polyethylene pipe, fittings and appurtenances shall be furnished by a single manufacturer who is fully experienced, reputable and qualified in the manufacture of the items to be furnished.

11.03 POLYETHYLENE PRESSURE PIPE

A. Polyethylene pipe 4" diameter and larger shall be high-density bimodal PE4710 polyethylene resin with a minimum cell classification of 445574 per ASTM D3350, Class 200, DR 11, meeting the requirements of AWWA C906. All pipe materials used in potable water systems shall comply with NSF Standard 61. Outside diameters of water, reclaimed water and pressure sewer HDPE pipes shall be ductile-iron pipe sizing system (DIPS).

B. Polyethylene tubing 2 inches in diameter and smaller for potable water and reclaimed water shall be high-density PE4710 polyethylene resin with a minimum cell classification of 445574 per ASTM D3350, Pressure Class 200, Copper Tube Size (CTS), SDR 9, meeting the requirements of AWWA C901 and ASTM D2737. Butt fusion or CTS brass connections shall be used. All pipe materials used in potable water systems shall comply with NSF Standard 61.

C. Alternatively, polyethylene tubing 2 inches in diameter and smaller for potable water and reclaimed water shall be crosslinked high-density polyethylene (PEXa) 3306 pipe, Pressure Class 200, Copper Tube Size (CTS), SDR 9, meeting the requirements of AWWA C904. Butt fusion or CTS brass connections shall be used. All pipe materials used in potable water systems shall comply with NSF Standard 61.

D. All HDPE MJ Adapters (DIPS) shall be a DIPS Bell MJ Adaptor with a retaining gland, stainless steel reinforcing collar, gland ring, standard MJ gasket, and extra-long Tee-head bolts. The gland ring shall be ductile iron, C110, heavy body gland ring. Twist-off nuts, sized same as tee-head bolts, and shall be used to insure proper actuating of restraining devices.

11.04 JOINTS

Where PE pipe is joined to PE pipe, it shall be by thermal butt fusion. Thermal fusion shall be accomplished in accordance with the written instructions of the pipe manufacturer and fusion equipment supplier. The installer of the thermal butt fused PE pipe shall have received training in

heat fusion pipe joining methods and shall have had experience in performing this type of work. The date of technician certification shall not exceed 12 months before commencing construction.

Where thermal butt fusion cannot be used, or when specifically called for on the Contract Drawings, electro-fused couplings may be used. Fusion shall be in accordance with the written instructions of the fitting manufacturer. However, Contractor must get prior approval from the City and Engineer before implementing a fusion coupling. Solvent epoxy cementing, electro-fusion couplings and mechanical joining with bolt on wrap around clamps or mechanical joints without an adapter shall not be used for connections.

All fittings for HDPE pipe (4” and larger), except for D.I/HDPE Mechanical Joint Adaptors, shall be ductile iron mechanical joint fittings and shall be joined to the pipe using a butt fused restrained mechanical joint adapter. The D.I./HDPE mechanical joint adapter shall be connected to the HDPE pipe by a heat-fused joint on one end, and connected to a ductile iron pipe valve, or fitting with a mechanical joint on the other end.

Flanged adapter, mechanical adapter and molded fittings for 4-inch and larger pipe shall be Pressure Class 200, PE4710, Ductile Iron Pipe Size (DIPS), DR 11, conforming to AWWA C906 with min. cell classification of 445474 per ASTM D3350. Mechanical joints and fittings for 2-inch and smaller tubing shall meet the requirements of: AWWA C901, ASTM D3350 and ASTM D3140.

11.05 DETECTION

Direct buried HDPE pipe shall have 3-inch detectable metallic tape of the proper color placed directly above the pipe and 12-inch below finished grade or 6-inch detectable tape between 12-inch and 24" below finished grade.

Direct buried or horizontal directional drilled HDPE pipe shall also have tracer wire installed along the pipe alignment. The tracer wire to be used shall be a solid, 10-gauge, high strength, copper clad steel wire with a polyethylene jacket of appropriate color manufactured by Copperhead Industries or approved equal.

11.06 IDENTIFICATION

Pipe shall bear identification markings in accordance with AWWA C906.

Pipe shall be color coded blue for water, purple (Pantone 522 C) for reclaimed water or green for pressure sewer using a solid pipe color or embedded colored stripes. Where stripes are used, there shall be a minimum of three stripes equally spaced.

11.07 INSTALLING POLYETHYLENE PRESSURE PIPE AND FITTINGS

All polyethylene pressure pipe shall be installed by direct bury, directional bore, or a method approved by the City prior to construction. If directional bore is used, or if directed by the City, the entire area of construction shall be surrounded by silt barriers during construction.

11.08 INSPECTION AND TESTING

All pipelines shall remain undisturbed for 24 hours to develop complete strength at all joints. All pipelines shall be subjected to a hydrostatic pressure and leak test per the Specifications.

END OF SECTION

THIS PAGE INTENTIONALLY LEFT BLANK

SECTION 12 - PRESSURE PIPE CONSTRUCTION

12.01 GENERAL

The Work in this section includes construction of potable water mains, reclaimed water mains, sanitary force mains, and appurtenances.

Pressure pipelines are to be constructed at locations shown on the Contract Drawings. The City reserves the right to make minor changes in grade and/or alignments as the Work progresses.

Piping materials for pressure pipe installations shall be as follows:

Potable Water Main		
PVC Pipe	2-inch	
DI Pipe	6-inch and larger	
HDPE Pipe	2-inch and larger	ASTM D3350 meeting PE 3408 code designation
Galvanized Pipe	2-inch blow-off assemblies, 2-inch connections, 2-inch short tunneling, and 2-inch short relocations	
Fittings	2-inch PVC pipe:	PVC with gasketed joint
	2-inch galvanized pipe	Galvanized steel with threaded joint
	6-inch and larger pipe	Ductile Iron (DI) with push-on or mechanical joint

Sanitary Force Main		
PVC Pipe	4-inch through 36-inch:	ANSI/AWWA C900-16
DI Pipe	14-inch and larger pipe:	ANSI/AWWA C151
HDPE Pipe	2-inch and larger	ASTM D3350 meeting PE 3408 code designation
PVC Fittings	4-inch through 48-inch pipe:	DI with push-on or mechanical joint
DI Fittings	4-inch and larger pipe:	DI with push-on or mechanical joint
HDPE Fittings	2-inch and larger pipe:	ASTM D3350 meeting PE4710 code designation or DI with HDPE mechanical joint adapter

All existing water services shall be kept in service during the construction of water mains and the preparation of new service connections. Water meters requiring disconnection by the Contractor to accomplish the Work shall be promptly restored to service by the Contractor. The Contractor shall give a minimum of 24 hours prior written notice to all affected water customers of the intended service interruption.

The Contractor's attention is called to the fact that the existing sewer system must be kept in operation at all times. Where connections are made to existing mains or other shutdowns are necessary, permission must be obtained and arrangements must be made with the Utilities

Department for removing from service those mains that will be affected. Shutdowns must be held to a minimum in both number and duration. Bypass pumping and hauling operations may be required to interrupt service.

No valve or other control device on the existing system shall be operated by the Contractor without first obtaining approval from the Utilities Department. The Contractor shall, at least forty-eight (48) hours in advance, notify citizens subject to interruption of service by means of door hangers or any other approved method of the starting time and duration of such interruption.

All pipe, fittings, and appurtenances shall be furnished by the Contractor and be transported, delivered, and installed by the Contractor in accordance with the requirements of the subsection headed "Laying and Jointing Pipelines."

All pipelines shall be tested in accordance with the requirements of the subsection headed "Testing and Disinfection of Pressure Pipelines: Pressure Test."

All potable water and reclaimed water pipelines shall be disinfected before they are put into service as specified in the subsection headed "Testing and Disinfection of Pressure Pipelines: Disinfection."

As-built drawings shall be submitted to the Engineer prior to acceptance of the Work and prior to commencement of the warranty period.

Standards referenced in this Section are the latest revision of the following specifications:

ANSI/AWWA C105	"Polyethylene Encasement for Ductile-Iron Piping for Water and Other Liquids"
ANSI/AWWA C110	"Ductile-Iron and Gray-Iron Fittings, 3-Inch through 48-Inch
ANSI/AWWA C111	"Rubber-Gasket Joints for Ductile-Iron Pressure Pipe and Fittings"
ANSI/AWWA C504	"Rubber-Seated Butterfly Valves"
ANSI/AWWA C509	"Resilient-Seated Gate Valves for Water and Sewerage Systems"
ANSI/AWWA C515	“Reduced Wall, Resilient-Seated Gate Valves for Water Supply Service”
ANSI/AWWA C550	"Protective Epoxy Interior Coating for Valves and Hydrants"
ANSI/AWWA C600	"Installation of Ductile-Iron Water Mains and Their Appurtenances"
ANSI/AWWA C605	"Underground Installation of PVC Pressure Pipe and Fittings for Water"
ANSI/AWWA C651	"Disinfecting Water Mains"
ANSI/AWWA C800	"Underground Service Line Valves and Fittings"

ANSI/AWWA C900-16	"Polyvinyl Chloride (PVC) Pressure Pipe and Fabricated Fittings, 4 In. Through 60 In."
ANSI/AWWA C901	"Polyethylene (PE) Pressure Pipe and Tubing, 1/2-Inch through 3-Inch for Water Service"
ANSI/AWWA C906	"Polyvinyl Chloride (PVC) Pressure Pipe and Fittings 4-Inch through 63-Inch, for Water Distribution and Transmission"
ANSI/AWWA C901	"Polyethylene (PE) Pressure Pipe and Tubing, 1/2-Inch through 3-Inch for Water Service"
ASTM A 126	“Specification for Gray Iron Castings for Valves, Flanges, and Pipe Fittings”
ASTM D 429	"Test Methods for Rubber Property - Adhesion to Rigid Substrates"
ASTM D 3139	"Standard Specification for Joints for Plastic Pressure Pipes using Flexible Elastomeric Seals"

12.02 DATA TO BE SUBMITTED

The Contractor shall submit shop drawings in accordance with the Specifications.

Pipe
Valves
Joints and joint accessories
Fittings
Specials and accessories
Special linings and coatings
Water service materials

12.03 MATERIALS

All pressure pipe materials shall be in accordance with the applicable requirements of the Technical Specifications sections headed:

DIP “Piping Materials: Ductile Iron Pipe and Fittings”
PVC “Piping Materials: PVC Pressure Pipe”
HDPE “Piping Materials: HDPE Pressure Pipe”

All pressure pipe materials (pipe, fittings, valves, valve boxes, tapping valves and sleeves, precast thrust blocks, blow-offs, house services, etc.) except fire hydrants, shall be furnished by the Contractor. All pressure pipe fittings and valves shall be cast and manufactured in the United States of America unless complete certification is furnished in accordance with ANSI/AWWA C110.

All materials furnished shall be new. Materials not specified herein or on the Contract Drawings

shall conform to AWWA Standards and Industry Standards.

Piping, concrete, masonry, and all other materials shall conform to those materials as specified in the appropriate Technical Specifications sections for those materials. Specific pressure pipe and appurtenances materials shall conform to the following specifications:

All materials found during the progress of work to have flaws, cracks, or other defects will be rejected by the Engineer regardless of whether or not it has been installed and shall be replaced by and at the expense of the Contractor.

Materials shall not be stacked or placed under materials in such a manner that damage could result. Slings, hooks, or tongs used for lifting shall be padded in such a manner as to prevent damage to exterior surfaces, interior linings and components. If any part of the coating, lining or components is damaged, the repairs or replacement shall be made by the Contractor at his expense and in a manner satisfactory to the Engineer prior to attempting installation. In the event that materials supplied by the City are defective, the Contractor shall notify the Engineer immediately so arrangements can be made for replacing such devices.

12.03.01 2-INCH DIAMETER PIPE

1. Steel pipe shall be standard galvanized steel, Schedule 40, furnished in 21-foot lengths with both ends threaded.

2. All 2-inch steel fittings shall have screw type joints.

3. Pipe thread compound shall not be used. Threads shall be wrapped with teflon joint tape, non-hardening, Mil. Spec. T27730A. Cutting oils shall be dark, non-toxic, and equal to cutting oil manufactured by the Rigid Tool Company. The Contractor shall take caution not to allow cutting oil inside the pipe and shall remove all cuttings. Cutting oils shall be UL listed or NSF approved for use in potable water systems.

4. PVC pressure pipe to be used in the potable water system shall be Safety Blue in color or white with Safety Blue identification tape or color coded approved ink lettering as specified. PVC pressure pipe to be used in the reclaimed water system shall be Safety Purple in color or white with Safety Purple identification tape or approved color-coded ink lettering as specified.

   PVC pipe shall conform to the Technical Specifications section headed "Piping Materials - PVC Pressure Pipe."

5. HDPE pressure pipe shall conform to the Technical Specifications section headed, “Piping Materials – HDPE Pressure Pipe.”

12.03.02 VALVES - GENERAL

1. Valves shall be iron body, bronze mounted, and have joint ends as shown or specified. Valves shall have O-ring seals, unless otherwise specified.

2. A standard 2-inch square AWWA operating nut shall be provided on each valve. Valves shall have non-rising stems and shall open when the nut is turned counterclockwise. Each nut shall be marked with an arrow.

3. All valves of the same type shall be from the same manufacturer. Parts of valves of the same type and size shall be interchangeable. Unless otherwise specified, all valves shall be designed for a cold water working pressure of 150 psi.

4. All valves shall be furnished complete with gaskets, bolts, nuts, and glands necessary for installation.

5. All valves larger than 2-inch shall have restrained rubber gasketed compression joints, or mechanical joints with retainer glands, conforming to ANSI/AWWA C111, at the Contractor's option unless otherwise noted.

6. Valves used for sanitary force mains shall be the same as those used in other pressure pipe applications, unless otherwise specified.

7. Upon request, the valve manufacturer shall provide an affidavit of compliance, proof of design testing, and proof of production testing.

12.04 CONNECTIONS TO EXISTING MAINS

The Contractor shall connect the new pressure pipelines to the existing pressure pipelines at locations as shown on the Contract Drawings and as specified. The Engineer shall be notified at least 2 working days prior to making connections. The time at which the connections are to be made and the manner of making the connections shall be subject to review and acceptance by the Engineer.

The connections to the existing pressure pipeline shall be made to minimize the time during which the existing pressure pipeline will be out of service. The Contractor shall utilize the necessary number of crews and types of equipment and shall work the necessary hours to ensure completion of the connections within the time specified.

12.05 CONSTRUCTION OPERATIONS

Pressure pipelines shall be installed in open trenches, except when another method, such as jacking, boring, or tunneling, is shown on the Contract Drawings, specified, or ordered. Jetting shall not be allowed under roadway, alley, or driveway. All mains shall be laid and maintained at the required lines and grades with fittings, valves and appurtenances at the described locations. All pipe shall be laid to the depth as shown on the Plans, or when a depth is not indicated, with a minimum cover of thirty-six (36) inches outside of the roadway, and forty-two (42) inches under the roadway. Grade lines shall be set by the Contractor. The tolerance of such grades shall not be more than that specified on the drawings. When no tolerance is indicated a tolerance of 0.5 foot shall be used. All other realignments must be approved by the Engineer. The Contractor shall have suitable survey equipment on the site at all times.

All joints, fittings and other appurtenances shall not be covered until inspected by the City Inspector.

Non-compliance will require excavation of all joints and fittings

Pipe and fittings shall not be strung in residential areas more than 3 weeks in advance of pipelaying, unless otherwise approved by the Engineer. The Contractor shall install pipelines, pressure test, disinfect, and restore the ground surface in pipeline segments of 3,500 linear feet or less, except as otherwise approved by the Engineer. The new segment of pipelaying shall not start until restoration has commenced on the previous segment, or as approved by the Engineer.

Pipeline segments shall be pressure tested and disinfected after pipelaying is complete, to minimize inconvenience to the Public, except as otherwise approved by the Engineer.

No excavation shall be left open over a weekend. All pavement openings shall be completely repaired as specified in the Technical Specifications section headed "Surface Restoration" within 7 days of opening, or a temporary asphaltic pavement patch placed and maintained daily.

Where shown on the Contract Drawings or where directed by the Engineer, the Contractor shall remove existing pipelines which are shown to be abandoned. Any such pipe, fitting, etc., shall be removed after the new pipeline (replacing the existing line) is accepted and put into service by the City. Removed pipe and appurtenances 6 inches or larger which are described elsewhere or deemed by the Engineer to be reusable shall be delivered to the City by the Contractor. All material not deemed reusable shall become the Contractor's property and shall be removed from the site by the Contractor. No additional payment will be made for salvaging pipe and fittings.

In general, pipe six inches and smaller abandoned within City rights-of-way shall be capped at both ends and abandoned in place. Grouting is not required unless specifically required by the Engineer or the City. Abandoned pipes eight inches and larger shall be filled with grout or flowable fill unless otherwise directed by the City or the Engineer. Pipe abandoned in rights-of-way owned by municipalities other than the City shall be subject to the requirements of the agency having jurisdiction. All pipes shall be abandoned in a manner which results in the abandoned pipeline not being pressurized.

Short tunneling of pressure pipe shall be constructed as required to protect trees, shrubs, and existing surface or subsurface utilities and structures. Short tunnels shall be constructed to the lengths shown on the Contract Drawings, specified, or directed by the Engineer. The Contractor will be allowed to utilize an auger machine and to push or pull the carrier pipe into the bore without the need of a casing. The Contractor shall install the pipe within the bore hole on a line and grade to allow connection to open cut piping adjacent to the bore hole within pipe jointing alignment limits defined for the pipe in question. The completed installation shall not result in settlement of soil under the obstacle.

Existing fences shall be restored by the Contractor and shall be finished and installed so that the restoration is equal to or better than the original. Only those portions of original fencing or materials there from, that the Engineer approves for re-use, shall be used by the Contractor in fence restoration. All other materials, including lumber, paint, wood preservative, concrete, and metal products shall be furnished by the Contractor.

The cost of protecting, replacing, relocating, and maintaining (including using hay bales) storm and sanitary sewerage facilities shall be included in the various unit price Pay Items, and no separate

payment will be made therefore unless otherwise specified in other Pay Items.

12.06 LAYING AND JOINTING PRESSURE PIPELINES

All pressure pipeline installation shall comply with applicable standards of ANSI/AWWA C600, C605, and C906, and with these Specifications.

Mechanical joint fittings and valves installed in sections of unrestrained pipe, and in blow-offs, shall be installed using ductile iron retainer glands, as set forth in the Technical Specifications section headed "Piping Materials: Ductile Iron Pipe."

PVC push-on fittings for pressure pipelines shall conform to the Technical Specifications section headed "Piping Materials: PVC Pressure Pipe."

Laying and jointing of HDPE pressure pipe shall conform to the Technical Specifications section headed “Piping Materials: HDPE Pressure Pipe.”

Excavation and backfill shall conform to the Technical Specifications section headed "Excavation and Backfill."

In lieu of jacking and boring or pushing of pipe up to 4-inch in diameter, the Contractor may use a soft bore directional drilling process as provided by Flow Mole Corporation or approved equal.

Cover for all pressure pipeline Work, if not shown on the Contract Drawings, shall be not less than:

	2-inch and 4-inch	6-inch and larger
Under roadways and alleys:	36 inches	42 inches
Under grass and sidewalks:	24 inches	36 inches

Unless otherwise noted on the Contract Drawings or in other sections of this Specification, the pressure pipeline shall be handled and installed in strict accordance with the manufacturer's instructions and with the applicable AWWA Standards. If a conflict exists between the manufacturer's instructions and the AWWA Standards, the manufacturer's instructions shall govern.

Prior to installation, all pipe shall be inspected for defects and all lump or excess coatings shall be removed. The inside of the bell and outside of the spigot shall be cleaned prior to joining of all pipe. Caution shall be taken to prevent damage to the pipe during lowering into the trench.

Any defective material shall be removed from the job site immediately. Should a defect be discovered after the item has been placed in the trench, the replacement will be at the Contractor's expense. Materials shall be stored along installation routes in a manner acceptable to the Engineer or as described elsewhere in the Specifications.

Polyethylene wrapping shall be installed on ductile iron pipe and appurtenances where shown on the Contract Drawings or where ordered by the Engineer.

Polyethylene encasement materials and installation shall meet the applicable requirements of ANSI/AWWA C105. Care shall be taken while backfilling to prevent puncturing, tearing, or otherwise damaging the polyethylene wrapping.

The Contractor shall use every precaution during construction to protect the pressure pipeline against the entry of non-potable water, dirt, wood, small animals, and any other foreign material that would hinder or contaminate the operation of the pipeline. Where the groundwater elevation is above the bottom of the trench, the Contractor shall provide suitable dewatering equipment.

All dewatering shall meet the requirements set forth in the Technical Specifications section headed "Excavation and Backfill."

Watertight plugs of an approved type shall be installed in the ends of all pipe, fittings, and valves during 24-hour or longer periods when installation is not in progress, or as required to prevent ditch water, sand, etc. from entering the pipe. Standard plugs shall be inserted into all dead end pipes, tees or crosses; spigot ends shall be capped; flanged ends shall have blind flanges, or sheet metal or plywood caps. Plugs installed for pressure testing shall be fully secured and restrained to withstand the test pressure.

Where plugging is required because of Contract division or phasing for later connection, the ends of such lines shall be equipped with a permanent type cast iron or ductile iron plug/cap or blind flange with or without a blowoff cock, as shown on the Drawings. Installation or removal of such plugging shall be considered incidental to the work and no payment shall be expected for this work by the Contractor.

Concrete thrust blocks of the proper size and type shall be furnished and installed at all locations where a change in the pipe alignment exceeds 7 degrees or dead ends, unless Contract Drawings show that adjacent pipe, in excess of 2 bells each direction, shall be restrained. Concrete thrust blocks used on 12-inch and larger mains shall be poured in place. Precast thrust blocks may be used on mains less than 12-inch in diameter. Thrust block concrete shall conform to the Technical Specifications section headed "Concrete, Masonry, and Reinforcing Steel."

Boring, soft boring, and jacking work other than new services shall strictly conform to all applicable stipulations of the State of Florida Department of Transportation Utility Accommodation Manual, unless otherwise specified. Softbore shall utilize a guided boring system, equal to FlowMole or DirectLine.

12.06.01 Expose Existing Pressure Pipeline and Record Elevation

The Contractor shall expose the existing pressure pipelines prior to the construction stake-out to determine the station, offset, and elevation, before actual construction begins. The Contract Drawings may be modified by the Engineer, as necessary, to accommodate the pressure pipelines which must remain.

12.06.02 Conflict Adjustment of Existing Pressure Pipelines

In some locations existing pressure pipelines intended to remain in service may need to be adjusted horizontally or vertically to avoid conflicts with the proposed storm drains, sanitary

sewers, roadway base, manholes, inlets, or other proposed improvements. The conflict may not be shown on the Contract Drawings.

In the event that a conflict is encountered and confirmed by the Engineer, the adjustment to alleviate the conflict shall be constructed in accordance with the applicable "Obstruction Detail" or as ordered by the Engineer.

12.06.03 Pipe Joints

1. **Standard Mechanical Joints**: In making mechanical joints, the pipe shall be centered in the bells. The surfaces of ductile iron pipe with which the rubber gasket comes in contact shall be thoroughly brushed with a wire brush just prior to assembly of the joint. The surfaces of PVC pipe shall be wiped clean with a cloth and soapy water. A pipe lubricant shall be brushed over the gasket just prior to installation. The gasket and gland shall be placed in position, the bolts inserted, and the nuts tightened finger tight. The nuts shall be tightened by means of a torque wrench, or as approved by the City, in such a manner that the gland shall be brought up evenly into the joint. The following range of bolt torques shall be applied:

Bolt Size (inch dia.)	Range of Torque (foot lbs.)
5/8	45 - 60
3/4	75 - 90
1	70 - 100

   If effective sealing is not obtained at a maximum torque listed above, the joint shall be disassembled and reassembled after thorough cleaning.

2. **DI Pipe Push-On Joints**: In making up the push-on rubber gasket joint, the gasket seat in the socket shall be thoroughly brushed with a wire brush and the gasket shall be wiped with a clean cloth. The gasket shall be placed in the socket with the large round end entering first so that the groove fits over the bend in the seat. A thin film of approved lubricant shall then be applied to the inside surface of the gasket that will come in contact with the entering pipe. The plain end of the pipe to be entered shall be thoroughly brushed with a wire brush and placed in alignment with the bell of the pipe to which it is to be joined. Ends of cut pipe shall be ground to a smooth bevel edge before inserting in bell. The joint shall be made up by exerting sufficient force on the entering pipe so that its plain end is moved past the gasket until it makes contact with the base of the socket.

   Backhoe buckets or excavation equipment are not to be applied directly to the pipe.

3. **PVC Pipe Push-On Joints**: Procedures for the making of PVC pipe push-on joints shall be similar in nature to those set forth in the preceding paragraph (except the bell shall be wiped with a clean cloth). Procedures shall strictly follow the manufacturer's printed instruction for the making of joints. In a like manner, all other PVC pipeline Work shall be performed in accordance with the manufacturer's recommendations.

4. **Restrained Joints**: Ductile iron mechanical joint pipe, fittings, and valves 12-inch and smaller that require restraint shall be installed using ductile iron retainer glands, as specified. The glands shall be installed in accordance with the manufacturer's recommendations. Glands using a frangible bolt for setting the restraining devices shall be tightened with standard wrenches.

   Glands using standard bolts for setting the restraining devices shall be tightened with a torque wrench. The assembly shall be given 2 heavy coats of a bituminous coating after installation.

   Restrained push-on joint pipe, fittings, and valves, where shown on the Contract Drawings, shall be with a restraining gland or restraining gasket, as specified.

   Pipe, fittings, and valve joints shall be restrained at locations shown on the Contract Drawings, or as specified. In addition, all other fittings and valves shall be installed using a ductile iron retainer gland.

   The following shall apply to various restrained joint/pipe size type:

Pipe Size (Inches)	Restrained Joint Type
2	No restrained joint allowed
4 through 12	Mechanical joint/retainer glands Tyton Pipe/Loc Fast Gasket, or equal
16 and larger	Mechanical joint/retainer glands TR Flex, or equal, pipe valves and fittings

12.06.04 Color Coding

Prior to backfilling, all pressure pipelines shall be identified with color coding. The applicable color codes, with light color stabilant, are:

Pipe Use	Color Coding
Potable Water	Safety Blue
Sanitary Sewer	Safety Green
Reclaimed Water	Safety Purple

1. **Coding on the Pipe**: HDPE and PVC pipe shall be colored at the point of manufacture. If black or white pipe must be used, pipe shall have City approved color coded ink lettering stamped on the pipe or shall be continuously taped with plastic adhesive tape using the color coding as stated above. Plastic adhesive tape shall be applied as follows:

   Black and white 2-inch and 4-inch pipe -- continuously taped at top center.

   Black and white 6-inch and larger pipe -- continuously taped at "10, 12, and 2 o'clock."

   Ductile iron pipe shall be continuously painted along the top one-third of the pipe with a 2-part high build epoxy-polyamide paint or approved equal. The paint shall be dry prior to the pipe being installed.

Ductile iron pipe wrapped in color coded polyethylene wrapping is not required to be painted.

2. **Coding above the Pipe**: Pipe shall have 3-inch detectable metallic tape of the proper color placed directly above the pipe and 12-inch below finished grade or 6-inch detectable tape between 12-inch and 24-inch below finished grade.

12.06.05 Valves and Valve Boxes

Valves shall be installed in a closed position, free from all distortion and strain, and left in satisfactory operating condition. Valves shall be tested in place by the Contractor, as far as practicable, and any defects in valves or connections shall be corrected to the satisfaction of the Engineer.

Tapping sleeves shall be pressure tested prior to making the tap.

Valve boxes with stay-put cover shall be vertical and concentric with the valve stem. Any valve box which is moved from its original position, preventing the operation of the valve stem, shall be satisfactorily reset by the Contractor at his expense.

Please see the Specifications for additional information for Valves.

12.06.06 Connections (Tie-ins) and Shutdowns

The Contractor shall furnish all labor and equipment necessary for the connection of approved pipelines to the existing system and the shutdown, removal or disconnection and plugging of existing pipelines as indicated on the Contract Drawings or as directed by the Engineer.

This may be required in instances where existing pipelines are to be abandoned or where a short segment of existing pipeline must be cut out and adjusted either vertically or horizontally to avoid a conflict with a proposed storm drain or storm drain structure, sanitary sewer, or other proposed improvement.

The Contractor shall make all taps and tie-ins required, under the direct observation of the Engineer.

12.07 PIPELINE CLEANING

All mains shall be pigged, cleaned and flushed to remove all sand and other foreign matter if required by the City and Engineer. The Contractor shall be responsible for developing a pigging and flushing plan to be submitted to the Engineer for approval prior to pigging and flushing. The Contractor shall dispose of all water used pigging and for flushing without causing a nuisance or property damage, in accordance with state and local requirements. Any permits or fees required for the disposal of flushing water shall be the responsibility of the Contractor.

Flushing water used by the Contractor shall be taken from an approved metered source. The water utility will provide the meter and designate the source. Potable and reclaimed flushing water shall be at the Contractor’s expense. Reclaimed water should be used for sanitary force mains and potable

water can be used for all service types.

The cleaning of the pipeline shall be done by the controlled and pressurized passage of a polyurethane pig of varying dimensions, coatings and densities as determined by the City through the piping system.

A series of pigs shall be entered into the system at a point as near to the beginning as is logistically and mechanically feasible.

A launching assembly shall be used as the entrance point for the pig. This assembly shall allow for the following:

1. The entering of pigs into the system by providing the means to induce flow from an external source, independent of the flows and pressures immediately available from the system, on the back of the pig to develop sufficient pressure to force the pig through the system.
2. A means to control and regulate the flow.
3. A means to monitor the flows and pressures.
4. A means to connect and disconnect from the system without any disruption to the operation of the system.

The pig shall be removed or discharged from the system at a point as near to the end as is logistically and mechanically feasible.

The contractor shall be responsible for the retrieval of the pig at the discharge point. This may include setting a trap that will not disrupt normal flow and operations but will capture the pig and any debris. A retrieval assembly may also be used but said assembly shall be able to connect and disconnect from the system without any disruption to the operation of the system.

Alternative launching and retrieval methods shall be done with the prior approval of the City.

Any pig that cannot progress through the piping system shall be located by the contractor and removed by excavation of the pipe to remove the blockage. All pipe repairs shall be the responsibility of the contractor and shall be performed with as little disruption to the system as possible.

Any increase in pressure that cannot be accounted for, i.e. fittings or valves or additional cleaning runs, shall be investigated, per the Engineers' review and acceptance, by locating the pig at the beginning of the increased pressure and excavating to determine the cause of the pressure increase. All pipe repairs shall be the responsibility of the contractor and shall be performed with as little disruption to the system as possible.

Final flushing of the cleansed lines shall be performed after the last successful run of the pig as determined by the City. The contractor shall be responsible for all applicable flushing and disinfection requirements for potable water lines.

The contractor shall maintain and provide a report at the end of the cleaning procedure containing the following:

1. The pressures in the pipe during the pigging procedure.
2. Any inline problems encountered during the procedure including all excavations with detailed locations, reason for the excavation and any corrective measures taken to the pipeline.
3. A record of the pigs used, their sizes, styles and other pertinent information regarding what materials were used during the cleaning.
4. An analysis of the condition of the pipeline before and after the cleaning procedure.

12.08 TESTING AND DISINFECTION OF PRESSURE PIPELINES

All new pressure pipelines shall be subjected to a water pressure test between valves. In order to expedite the restoration of certain surface facilities, it may be required that individual sections between valves be tested as soon as the valves are installed. Disinfection shall be accomplished after the pressure test requirements have been met for the entire segment of pressure pipe.

The Contractor shall furnish all labor, materials, equipment, and chemicals to perform the required pressure tests and disinfection. All testing and disinfection will be subject to City inspection. All new valves shall be operated by the Contractor. However, all tie-in valves to the existing water system shall only be operated with the approval of, and in the presence of, the City, and shall be scheduled to be performed during the standard work hours of City staff, unless otherwise approved by the Engineer.

All existing valves shall be operated by the City or by the Contractor under the direct supervision of the City.

Testing and disinfection of pressure pipelines shall be completed per Flushing, Testing, and Disinfection section.

12.09 SURFACE RESTORATION AND MISCELLANEOUS

All surfaces disturbed by the Contractor shall be restored to their original condition in conformance to the Technical Specifications sections headed "Surface Restoration".

Sanitary sewers and laterals which cross a new potable water pipeline with less than 18 inches clear vertical separation, shall be replaced with 20 linear feet of ductile iron pipe, PVC pressure pipe (ANSI/AWWA C900-16), or SDR26 gravity pipe centered on the new pipeline, or as ordered by the Engineer.

Sanitary sewers and/or laterals which conflict with the new pipeline or are damaged by pipeline construction shall be reconstructed with ductile iron pipe, PVC pressure pipe (ANSI/AWWA C900-16), or SDR26 gravity pipe, as ordered by the Engineer.

Each valve box in an unpaved area shall have an 18-inch by 18-inch by 4-inch concrete pad. Pad shall be 1 inch above grade, and sod shall be so placed to maintain this 1 inch.

END OF SECTION

THIS PAGE INTENTIONALLY LEFT BLANK

SECTION 13 - DIRECTIONAL BORING OF PIPE

13.01 GENERAL

A. All existing structures, water and sewer lines, storm drains, utilities, driveways, sidewalks, signs, mail boxes, fences, trees, landscaping, and any other improvement or facility in the construction area that the Contractor disturbs for his own construction purposes shall be replaced to original condition at no additional cost to the City.

B. For “Navigable Waters of the U.S.” reference 33 of the Code of Federal Regulations, Part 329.

C. For “Waters of the U.S.” reference 33 of the Code of Federal Regulations, Part 323.

D. For “Waters of the State” reference Section 62-301 of the Florida Administrative Code.

13.02 TESTING

A. In place soil compaction tests shall be performed by a qualified testing laboratory.

B. Compaction tests shall be taken at every excavation, except in the road crossings or road shoulders; tests are to be taken according to current FDOT Standards.

C. All pipe shall be tested in accordance with the appropriate material specifications.

D. Reference Standards: American Society for Testing and Materials (ASTM), D1557, Moisture-Density Relations of Soils Using 10-lb. Rammer and 18-in. Drop.

E. The density of soil in place shall be a minimum of 95 percent in accordance with ASTM test 1557-70T, Method A or C.

13.03 QUALIFICATIONS

A. Pipe Manufacturer: All pipe and fittings shall be furnished by a single manufacturer who is fully experienced, reputable and qualified in the manufacture of the items to be furnished.

B. Drilling Supervisor: The Contractor shall provide a competent boring specialist who shall remain on the project site during the entirety of the directional boring operation. This includes, but is not limited to, drilling fluid preparation, seaming, boring and pulling. The boring specialist shall have a minimum of five years of experience in supervising directional bores of similar nature, diameter, materials and lengths.

C. Pipe Fusion: All boring and fusing equipment shall be certified for operation. The Contractor responsible for thermal butt fusing pipe and fittings shall have manufacturer certification for performing such work or a minimum of five years of experience performing this type of work. If no certification is available, written documentation of the required work experience shall be submitted for review and acceptance.

D. Drilling Fluid Specialist: The personnel responsible for supervising the supply, mixing, monitoring fluid quality, pumping and re-circulation system proposed for the drilling fluid shall have a written certification issued by the Drilling Fluid manufacturer for performing such work or a minimum of five years of experience performing this type of work. If no certification is available, written documentation of the required work experience for the proposed personnel shall be submitted for review and acceptance.

13.04 SUBMITTALS

A. Detailed description including specifications and catalog cuts for:

1. Shop drawings and catalog data for all HDD equipment.
2. The pipe manufacturer's maximum degree of radial bending allowed for the pipe when full and when empty and pullback force recommended setting.
3. Steering and tracking devices including specific tracer wire.
4. Drilling fluids; the drilling fluid submittal shall include the ratio of mixture to water, including any additives, based on the Contractor’s field observations prior to construction, knowledge and experience with drilling in similar conditions, and any soil data provided in the Contract Documents, which shall be verified by the fluid specialist.
5. Shop drawings for the breakaway swivel, including the method of setting the swivels’ break point and set point to be used.
6. Shop drawings for sizing of the mandrel for pull through testing
7. Pipe assembly procedure, details of support devices, and staging area layout including methods to avoid interference with local streets, driveways, and sidewalks.
8. Details of pipe fusion procedures and copies of the fusion technician qualification certification or documentation.
9. Drilling fluid technician qualification certification or documentation

B. Bore Plan: For all contiguous piping installations over 300 feet in length or any installations for piping larger than 4” in diameter, the Contractor shall submit a Bore Plan that includes the following at least 21 days prior to beginning work:

1. Contact information and experience for the drilling fluid specialist.
2. The number of passes the bore will include to get the product pipe installed.
3. The pilot bore and all reaming bore sizes including the final pullback with the product pipe.
4. Drilling rod length in feet.
5. The pilot bore, pre-ream bores (if any) and pullback production rate in minutes per (drilling) rod to maintain adequate mud flow.
6. Details of the entry and exit pit locations along with entry and exit angles for the bore, drawn to scale, depicting the position of all required equipment, access points, existing facilities to remain in place, existing traffic lanes to be maintained in operation, office trailers and storage sites.
7. The method of fusing or joining pipe of adjacent bores to ensure that the joint is on grade with the installed pipe.

C. If the Contractor is planning on deviating from bid document Profile, then the Contractor is required to submit detailed calculations supporting the modifications. The calculations

shall consist of the following:

1. Predicted and allowable pulling loads and bending stress, and the minimum allowable bending radius (Provide an estimate of the pulling loads and bending stress at characteristic points along the drill path when the curvature of the drill path changes).
2. Calculations for safety factors against ring collapse of the pipe during pullback and confirm ring deflection is within limits.
3. Graphical representation of evaluation of frac-out risks, showing maximum allowable and minimum required pressures at all critical locations along the bore alignment. The calculations shall be conducted by or under the direct supervision of a Professional Engineer licensed in the State of Florida, who shall stamp and seal the calculations.
4. The deviation drawings shall include a HDD Profile, plan view and cross-section. The Contractor is also recommended to submit deviation drawings for larger bores for site layout plans (Rig and Product Pipe Layout site) and pipeline stringing area (rollers).

D. Bore Schedule: For all contiguous piping installations over 300 feet in length or any installations for piping larger than 4-inches in diameter, the Contractor shall submit a detailed schedule for the HDD installation at least fifteen days prior to mobilization. The detail schedule shall identify all major construction activities and durations, with beginning and completion dates shown. The detail schedule shall be updated at least every two weeks or more frequently, as directed by the Engineer, and shall include but not limited to the following items:

1. Pre-construction walk over and inspection
2. Regular Mobilization and set-up
3. Pilot bore
4. Pre-reaming and reaming
5. Layout and thermal butt fusing of pipe
6. Pressure Testing of pipe prior to pullback when practical or as directed by the Engineer.
7. Final reaming and pullback of product pipe.
8. Annulus grouting after installation (optional).
9. Mandrel/pig test to confirm deformations of product pipe are within allowable tolerances.
10. Cleanup, surface restoration, and demobilization.

F. Prepare a Frac-out and Surface Spill Contingency Plan. Submit the plan to the Engineer prior to construction. Submit a letter of intent signed by an authorized representative of Contractor, confirming that the plan will be followed. The contingency plan for inadvertent returns/hydrofracture shall address all potential pathways for release of drilling fluid, and shall address containment, cleanup, and mitigation measures as well as inspection and reporting procedures and points of contact for regulatory and permitting agencies. The Plan shall address releases to the ground surface and controlled releases at any relief wells installed by the Contractor. Describe the location, installation, monitoring, and abandonment procedures for any relief wells. Provide stand-by equipment on-site to recover fluids via vacuum. Describe equipment and procedures

to private residence yard areas to inspect for and clean up fluid releases.

G. The Contractor shall submit an as-built profile of the pilot bore within twenty-four (24) hours of completion of the pilot bore to the Engineer and City Representative. Contractor shall receive written review and acceptance from either party in order to continue with the proposed profile alignment.

H. Furnish a Bore Path Report to the City within seven days of the completion of each bore path. Data collected by the City Representative does not relieve the Contractor from the responsibility of recording his own data. Include the following in the report:

1. Location of project, project name and number
2. Name of person collecting data, including title, position and company name
3. Investigation site location (Contract plans station number or reference to a permanent structure within the project right-of-way)
4. Driller's Log & identification of the detection method used
5. Elevations and offset dimensions of installed pipe as referenced to the drawings
6. Data log of pullback force during product pipe installation
7. All failed bores. Include length of pipe left in place and explanation of failed installation.

13.05 MATERIALS

A. Incidental materials that may or may not be used to install the product depending on field requirements are not paid for separately and will be included in the cost of the installed product.

B. Drilling Fluids shall use a mixture of bentonite clay or other approved stabilizing agent mixed with potable water with a pH of 8.5 to 10.0 to create the drilling fluid for lubrication and soil stabilization. Vary the fluid viscosity to best fit the soil conditions encountered. Contractor shall have appropriate additives for drilling fluid available for different soil conditions that may be encountered. Do not use any other chemicals or polymer surfactants in the drilling fluid without written consent from the City. Certify to the City in writing that any chemicals to be added are environmentally safe and not harmful or corrosive to the product pipe.

C. For drilling operations that will be below waters of the State of Florida, only bentonite free drilling fluids shall be used. Acceptable products are BioMax, manufactured by M-I Swaco, Inc., P.O. Box 2216, Laurel, Mississippi 39440, Phone: (800) 731-7331 or Bio-Bore, manufactured by Baroid Drilling Fluids, Inc., P.O. Box 1675, Houston, Texas 77251, Phone: (731) 987-5900 or approved equal.

D. Identify the source of water for mixing the drilling fluid. Approvals and permits are required for obtaining water from such sources as streams, rivers, ponds or fire hydrants. Any water source used other than potable water may require a pH test.

E. Directional Drilling/Boring pipeline construction shall require the installation of minimum #10 AWG Copper Clad, Extra High Strength Steel tracer wire with minimum 1,150 lb.

break load, with a minimum 45 mil HDPE insulation thickness. Refer to the Specifications for tracer wire details.

F. Breakaway connectors shall be supplied by DCD Design & Manufacturing, Condux International, Inc. or approved equal.

13.06 SITE CONDITIONS

A. Carry out excavation for entry, exit, recovery pits, slurry sump pits, or any other excavation as specified in the Contract documents. Sump pits are required to contain drilling fluids if vacuum devices are not operated throughout the drilling operation, unless approved by the City.

B. Within 48 hours of completing installation of the boring product, clean the work site of all excess slurry or spoils. Take responsibility for the removal and final disposition of excess slurry or spoils. Ensure that the work site is restored to pre-construction conditions or as identified on the Contract Drawings.

C. Exposure of product pipe to sunlight shall be limited to 14 consecutive days unless approved by the City.

D. The pipe shall be supported at intervals along its length with rollers or Teflon pads to minimize frictional forces when being pulled, and to hold the pipe above the ground. Surface cuts or scratches greater than or equal to the maximum defect depth in 3.08 E are not acceptable.

13.07 DAMAGE RESTORATION & REMEDIATION

A. The Contractor shall take responsibility for restoration for any damage caused by heaving, settlement, separation of pavement, escaping drilling fluid (frac-out), or the directional drilling operation, at no cost to the City.

B. When required by the City, provide detailed Contract Drawings which show how damage to any roadway facility will be remedied. These details will become part of the Record Drawings Package. Remediation Plans must follow the same guidelines for development and presentation of the Record Drawings. When remediation plans are required, they must be approved by the City before any work proceeds.

C. For HDD operations that will be below waters of the State of Florida, the contractor shall be responsible for any damage caused by the drilling operation, including, but not limited to, fracturing of the channel bottom. Any State or Federal required environmental cleanup due to the release of drilling fluids into State waters shall be at the Contractor's expense. The Contractor may at his own expense increase the depth of his drilling operations upon the approval from the City.

13.08 QUALIFICATIONS FOR REJECTION OF DIRECTIONAL BORE

A. The City may reject any portion of the work that is deemed to be non-responsive to the Contract requirements or not in conformance with approved Contract Drawings and

submittals, and for other factors including the following:

1. Failed Bore: When there is any indication that the installed product has sustained damage, stop all work, notify the City and investigate damage. The City may require a pressure and / or mandrel test at no additional cost to the City and shall have a City representative present during the test. Perform all testing within 24 hours unless otherwise approved by the City. Furnish a copy of the test results and all bore logs to the City for review and acceptance. The City is allowed up to 5 working days to approve or determine if the product installation is not in compliance with the specifications.
2. Obstructions: If an obstruction is encountered during boring which prevents completion of the installation in accordance with the design location and specification, the pipe may be taken out of service and left in place at the discretion of the City.
3. Pull-back Failure: If the installed breakaway device should fail during pull back.
4. Loss of Drilling Fluids: If the drilling fluid is “lost” during the pull back of the product and cannot be regained within the required timeframe of the manufacturer or if more than a reasonable amount of fluid is used to fill an unknown void and flow cannot be regained. No pipe shall be pulled without visible flow of drilling fluid.
5. Test Failure: If the pipe shall fail a hydraulic pressure test or mandrel test as specified by the City.
6. Damaged Pipe: If at any time when the product is pulled back and any exposed areas have a greater than allowable “gouging” or visible marring of the pipe per the table in 3.08 G.
7. Alignment Tolerance Exceeded: If the vertical and horizontal limits are not within tolerances.
8. Defective Material: Any other defect in material or workmanship which would affect the quality, performance, or installation life of the installed pipeline.

B. Remediation: All rejected bores shall be at the Contractor’s expense to correct and provide a satisfactory installed product. The Contractor shall submit to the City a revised installation plan and procedure for review and acceptance before resuming work. The City may require non-compliant installations to be filled with excavatable flowable fill or to be completely removed at no additional cost to the City.

13.09 PRODUCT LOCATING AND TRACKING

A. The City recognizes walkover, wire line, and wire line with surface grid verification, or any other system as approved by the City, as the accepted methods of tracking directional bores. Use a locating and tracking system capable of ensuring that the proposed installation is installed as intended. The locating and tracking system must provide information on:

1. Clock and pitch information
2. Depth
3. Transmitter temperature
4. Battery status
5. Position (x,y)

6. Azimuth, where direct overhead readings (walkover) are not possible (i.e. sub aqueous)

B. Ensure proper calibration of all equipment before commencing directional drilling operation.

C. Prepare the Driller's Log. Take and record alignment readings or plot points such that elevations on top of and offset dimensions from the center of the product to a permanent fixed feature are provided. Such permanent fixed feature must have prior approval of the City. Provide elevations and dimensions at all bore alignment corrections (vertical and horizontal) with a minimum distance between points of 10 feet. Provide a sufficient number of elevations and offset distances to accurately plot the vertical and horizontal alignment of the installed product.

13.10 PRODUCT BORE HOLE DIAMETER

Minimize potential damage from soil displacement/settlement by limiting the ratio of the bore hole to the product size. The size of the back reamer bit or pilot bit, if no back reaming is required, will be limited relative to the product diameter to be installed as follows:

Table 2-1. Recommended Relationship between Product Diameter and Reamed Diameter

Product Diameter	Reamed Diameter
< 8"	Diameter of product + 4"
8" – 24"	Diameter of product x 1.5
> 24"	Diameter of product + 12"
*Horizontal Directional Drilling Good Practices Guidelines – HDD Consortium	

13.11 EQUIPMENT REQUIREMENTS

A. The HDD equipment selected by the Contractor shall be capable of drilling, steering, tracking, reaming and installing the pipeline through all the subsurface conditions that may be present at the site.

B. Match equipment to the size of pipe being installed. Obtain the City's review and acceptance for installations differing from the above chart. Ensure that the drill rod can meet the bend radius required for the proposed installation.

C. All HDD equipment shall have an electronic data logger to record pull back force during all pipe installations.

D. All HDD equipment that has the capability to exceed the maximum recommended pulling force shall have a breakaway swivel properly attached to the product pipe that will release if the pullback force exceeds the pipe manufacturer's recommended pulling force.

13.12 THRUST / PULLBACK REQUIREMENTS

The Contractor shall provide as part of the required working drawings submittal complete data regarding the operational and maximum thrust or pulling forces to be used for the initial drill head and back-reamer installations, and the final pull-back of the pipe. Gages or other measurement tools shall be used to monitor the forces being used.

13.13 INSTALLATION PROCESS

A. Contractor shall contact the City and Engineer at least forty-eight (48) hours before each of the following activities:
   1. The setup of a drill rig pit,
   2. The start of the pilot bore,
   3. The pull back of the product pipe. Upon completion of the pilot-hole phase of the operation, a complete set of as-built records shall be submitted in duplicate to the Engineer. These records shall include copies of the plan and profile drawing, as well as directional readings recorded during the drilling operation.

B. Ensure adequate removal of soil cuttings and stability of the bore hole by monitoring the drilling fluids such as the pumping rate, pressures, viscosity and density during the pilot bore, back reaming and pipe installation. Relief holes can be used as necessary to relieve excess pressure down hole. Obtain the City's review and acceptance of the location and all conditions necessary to construct relief holes to ensure the proper disposition of drilling fluids is maintained and unnecessary inconvenience is minimized to other facility users.

C. At all times during the pilot bore the Contractor shall provide and maintain a bore tracking system that is capable of accurately locating the position of the drill head in the x, y, and z axes. The Contractor shall record these data at least twice per drill pipe length or every fifteen (15) feet, whichever is more frequent.

   1. Contractor shall monitor and record x, y, and z coordinates relative to an established surface survey benchmark, from downhole survey data using downhole wireline system. "Tru-Tracker" energized surface grid, or equivalent, shall be installed and used to supplement the wireline system. The "Tru-Tracker" grid shall encompass the entire area of the bore including underwater across the water. Alternatively, the Contractor may propose fixed "TruTracker" grids on land outside the waterway, supplemented by moveable grids on floating templates that can be temporarily anchored and surveyed while drilling the pilot hole. The moveable template should be sufficiently large to encompass the active drilling area for a two hour drilling period and should be at least as wide as the maximum depth of the bore. The grids shall be surveyed to establish horizontal and vertical position to 0.1 feet accuracy. The data shall be continuously monitored and recorded at least twice per drill pipe length or every fifteen (15) feet, whichever is most frequent.

   2. Deviations between the recorded and design bore path shall be calculated and reported on the daily log. If the deviations exceed tolerances specified

elsewhere, such occurrences shall be reported immediately to the City and Engineer. The Contractor shall undertake all necessary measures to correct deviations and return to design line and grade.

3. Drilling fluid pressures and flow rates shall be continuously monitored and recorded by the Contractor. The pressures shall be monitored at the pump and within the annular space with a downhole pressure-sensing tool located within thirty (30) feet of the drilling head.

4. Maximum allowable drilling speeds shall be calculated by the Contractor for pilot boring and each reaming pass and shall not be exceeded for pilot boring or reaming passes. Measurements shall be taken every fifteen (15) feet.

5. The Contractor shall measure and record drilling fluid viscosity and density at least three times per shift with at least two hours between readings, using calibrated Marsh funnel and mud balance. These measurements shall be included in daily logs submitted to the Engineer. The Contractor shall document modifications to the drilling fluids, by noting the types and quantities of drilling fluid additives and the dates and times when introduced. The reason for the addition of drilling fluid additives or other modifications shall be documented and reported.

6. The Contractor shall measure and record the pH on a regular basis (three times per shift with at least two hours between readings) with pH strips, paper or a pH meter.

7. The drilling fluid report shall include desired mud properties including weight, viscosity in cP, yield point in lb/100 sf, measured mud weight, funnel viscosity, plastic viscosity, fluid loss, % solids, chlorides, and detailed log of type and quantity of bentonite and all additives.

8. The Contractor shall constantly monitor and record the circulating volume, particularly for the early detection of drilling fluid losses, or thinning, or the danger of borehole collapse. Ground upheavals can also be detected early from such differences, and necessary action can be implemented to prevent further damage.

9. The Contractor shall constantly monitor and record the solid (sand) content to assure there is no significant increase, which can diversely impact efficiency of the circulations system.

D. The Contractor shall determine the pull-back rate in order to allow the removal of soil cuttings without building excess down-hole pressure and to avoid local heaving, or spills. Contain excess drilling fluids at entry and exit points until they are recycled and separated from excavated materials or removed from the site or vacuumed during drilling operations. Ensure that entry and exit pits and storage tanks are of sufficient size to contain the expected return of drilling fluids and soil cuttings. The bored hole shall always be maintained full of drilling fluids for support of surfaces, and the fluid re-circulation equipment shall operate continuously until the pipe installation is completed

and accepted by the City.

E. Ensure that all drilling fluids are disposed of or recycled in a manner acceptable to the appropriate local, state, or federal regulatory agencies. When drilling in suspected contaminated ground, test the drilling fluid for contamination and appropriately dispose of it. Remove any excess material upon completion of the bore. If in the drilling process it becomes evident that the soil is contaminated, contact the City immediately. Do not continue drilling without the City's approval.

F. The timing of all boring processes is critical. Install a product into a bore hole within the same day that the pre-bore is completed to ensure necessary support exists. Once pullback operations have commenced, the operation shall continue without interruption until the pipe is completely pulled into the borehole.

G. All prepared pipe that is being used for installation shall be adequately supported off the ground along the entire length to avoid damaging of the material during pullback due to ground surface conditions. Surface cuts or scratches greater than or equal to the maximum defect depth are not acceptable.

Pipe Size In.	Max. Defect Depth In.
4	1/16
6	1/11
8	5/32
10	3/16
12	1/4
> 12	Per Pipe Manufacturer's Recommendations

H. The drilling fluid specialist shall remain on the project site during the entirety of the directional boring operation to ensure proper mixture and production of drilling fluids needed for the bore.

I. Upon successful completion of the pilot hole, the borehole shall be reamed to a minimum of 25 percent greater than the outside diameter of the pipe being installed.

J. For bores with more than two radii of curvature (entrance and exit), the borehole should be reamed up to 50 percent larger than the outside diameter of the carrier pipe. Prereaming may be necessary dependent on size of material to be pulled.

K. Additional passes for prereaming may be required for larger pipe. Incremental increases shall be used as needed until appropriate bore hole size has been achieved.

L. Prereaming must be accomplished with no product attached to the reamer head on all bore pipe 6-inches and larger. The bore product may be pulled back on final pass of prereaming upon prior approval from the City.

M. After reaming the borehole to the required diameter, the pipe shall be pulled through the hole. In front of the pipe shall be a breakaway swivel and barrel reamer to compact the borehole walls.

N. The Contractor shall not ream at a rate greater than the drilling equipment and drilling fluid system are designed to safely handle.

O. Install all piping such that their location can be readily determined by electronic designation (tracer wire) after installation.

1. For all pipe installations, externally attach two (2) tracer wires; to the top of product pipe and secure in place with duct tape or 10-mil thickness polyethylene pressure sensitive tape at every joint and at 5 foot intervals.

P. Connect any break in the conductor line before construction with an electrical clamp, or solder, and coat the connection with a rubber or plastic insulator to maintain the integrity of the connection from corrosion. Clamp connections must be made of brass or copper and of the butt end type with wires secured by compression. Soldered connections must be made by tight spiral winding of each wire around the other with a finished length minimum of 3 inches overlap. Tracking conductors must extend 2 feet beyond bore ends. Test conductors for continuity. Each conductor that passes must be identified as such by removing the last 6 inches of the sheath. No deductions are allowed for failed tracking conductors. Upon completion of the directional bore, the Contractor shall demonstrate to the City that the wire is continuous and unbroken through the entire run of the pipe by providing full signal conductivity (including splices) when energizing for the entire run in the presence of the City Representative. If the wire is broken, the Contractor shall repair or replace it at no additional cost to the City.

Q. The pilot bore shall follow the design path of the bore shown on the Drawings:

1. Horizontal and vertical deviations shall be less than plus or minus three feet from the design path centerline. The Contractor shall continuously monitor horizontal and vertical position and record the position at least twice per drill pipe length, or at fifteen (15) feet intervals, whichever is most frequent.
2. The radius of curvature shall not be less than that shown on the Drawings. The radius of curvature shall be calculated over the distance of three drill pipe sections. If design radius of curvature is exceeded, the Contractor shall re-drill the pilot hole at no extra cost to the contract.
3. The location of the entry and exit points shall be as shown on the Drawings. The Contractor shall be solely responsible for all work necessary to correct excessive deviations from line and grade, including re-drilling, redesigning connections, and acquiring additional easement, at no additional cost to the Owner and without schedule extension.

R. Inadvertent Returns (Frac-Outs) and planned returns (at relief wells):

1. Contractor shall be responsible for avoiding any impact to existing utilities, structures, facilities, pools, and waterways in the Project area during the drilling operation. If the drilling fluid starts leaking to the surface (other than at the entry and exit points or relief wells), or if fluid loss results in surface movement, Contractor shall cease drilling until fluid loss volumes can be brought under control to minimize any inadvertent returns in the Project area. In such event, notify Engineer immediately. The Contractor shall clean up any locations where

drilling fluid surfaces, including releases at relief well locations. Contractor shall pay particular attention to the potential of inadvertent returns washing out along existing utility crossings and shall have preventive measures in place to prevent these occurrences from happening. Contractor shall be fully responsible for all damages caused by the force main installation operations. The pilot bore shall be pre-reamed and reamed using equipment and methods submitted by the Contractor. The Contractor shall completely ream the borehole to the final diameter prior to pull back, when practical or as directed by the Engineer.

O. The Contractor shall perform hydrostatic water pressure test in accordance with the manufacturer's guidelines prior to product pipe pullback.

13.14 PIPELINE TESTING

A. Hydrostatic Testing
   1. Refer to Specifications for pipe material.

B. Mandrel Deflection Testing Process

   1. The deflection test for flexible pipe systems shall be performed by pulling a mandrel through the pipeline. The mandrel shall have a diameter equal to 80 percent of the inside diameter of the pipe system being tested. When the mandrel cannot be pulled through the pipeline the Contractor shall locate and correct the defect to the satisfaction of the City. After the defect is corrected and trench backfilled, the section of line shall then be retested to compliance.

   2. Deflection tests shall be performed not sooner than 24 hours after completion of the pipe pull-back. The Contractor shall take measures to ensure the pipe is clean as not to interfere with the mandrel test.

   3. The mandrel types that can be used are:

      a. a rigid, nonadjustable, odd number of legs (9 legs minimum), mandrel having an effective length not less than its nominal diameter; and to be fabricated of steel, fitted with pulling rings at each end, stamped or engraved on some segment other than a runner indicating the pipe material specification, nominal size and be furnished in a suitable carrying case labeled with the same data as stamped or engraved on the mandrel.

      b. If approved by the City, a smaller diameter piece of similar material that is approximately double the nominal diameter in length and meets the 80% reduction of the inside diameter of the pipe being tested. The pipe length may need to be adjusted to ensure the pipe section cannot become skewed and become lodged; this may cause the test to fail.

   4. The mandrel shall be pulled through the pipe by hand to ensure that maximum allowable deflections have not been exceeded or that "necking" has not occurred. Prior to use, the mandrel shall be inspected by City personnel. Use of an unapproved mandrel or a mandrel altered or modified after inspection will

invalidate the test. If the mandrel fails to pass, the pipe will be deemed over deflected or necked.

5. Over deflected or necked pipe shall be abandoned and reinstalled. The replaced pipe shall be tested for deflection not sooner than 24 hours after installation.

C. The following deficiencies in the flexible pipe system installation shall be corrected by the Contractor at no cost to the City:

1. Over deflections
2. Stretched or “Necked” Pipe
3. Damaged Pipe
4. Improper Pipe Welds
5. Infiltration Points
6. Debris in the line

D. The City will not accept a credit, maintenance bond, or any other form of compensation in lieu of corrective measures that may be required to correct any sections of flexible pipe system that are improperly installed or do not meet the requirements of these specifications. In addition, all corrective measures proposed by the Contractor shall be approved by the City. In addition, should repairs of the flexible pipe system be accomplished by the use of any unauthorized materials or procedure, the City will require replacement of those substandard portions or repairs made to conform to the requirements of these specifications.

END OF SECTION

THIS PAGE INTENTIONALLY LEFT BLANK

SECTION 14 - JACKING AND BORING

14.01 SCOPE OF WORK

The Contractor shall furnish all labor, equipment, materials and incidentals required to install road or railroad crossings as shown on the Contract Drawings and as specified herein.

The Contractor is responsible for verifying the location of all utilities in the ground before commencing the jack and bore operation. No compensation will be allowed for labor or materials for unused casing. The Contractor will be responsible for all damage incurred to roadways or utilities by his operation.

14.02 OPERATIONS IN THE CITY OF ST. PETE BEACH OR STATE OF FLORIDA PROPERTY

All work affecting The City of St. Pete Beach, Florida Department of Transportation (FDOT), any other governmental agency's right-of-way or facilities, or railroad right-of-way shall be carried out to the full satisfaction of the applicable Department's authorized representative. The Contractor shall be responsible to meet any and all requirements of the Department of Transportation, railroad, or other agency pertaining to the specific project and shall conduct all his work accordingly.

Prior to the start of the jacking operation, a detailed jacking plan shall be submitted to the City for review and acceptance. No work shall be permitted until the submittals are accepted.

Prior to construction, a minimum of three (3) working days written notice prior to start of the actual work shall be given to the City and to the FDOT or other applicable agency.

A Bore Path Report shall be submitted with in three (3) days of completion of the bore.

The Contractor shall install, maintain and leave in place any sheeting, underpinning, cribbing and other related items (other than that required for the jacking pits) to support any structures or facility on the right-of-way owned by either The City of St. Pete Beach, FDOT or other governmental agency or railroad entity. The Contractor, at his expense, may be directed by FDOT, other applicable agency, or the City, to leave sheeting in place.

The Contractor shall perform all necessary soil test borings to determine actual soil conditions and shall utilize the results of said borings to determine the procedures required for each jack and bore operation, including, but not limited to, the presence of rock and necessary dewatering requirements.

No wires, equipment, or other appurtenances shall be permitted to be placed across or pass across State property without the express written permission of FDOT’s authorized representative.

All equipment used by the Contractor on State property may be inspected by the State and shall not be used if it is deemed unsatisfactory by an authorized State representative. State

highways shall be kept free of obstructions at all times.

No blasting shall be permitted under or adjacent to any State highways.

The Contractor shall be responsible for all damages arising from his negligence or failure to comply with any State or The City of St. Pete Beach regulations or requirements or deviations from the Contract Documents.

All State highway crossings shall be performed and completed in a manner fully satisfactory to the Department of Transportation and The City of St. Pete Beach.

14.03 SHOP DRAWINGS

The Contractor shall furnish working drawings showing all fabrication and construction details for the jacked crossings.

14.04 SUBMITTALS

Contractor shall submit a Jacking Plan that includes the following:

1. Site layout plan for entry and exit pit locations, drawn to scale, depicting the position of all required equipment, access points, existing facilities to remain in place, existing traffic lanes to be maintained in operation, and storage sites.
2. Qualification information on jack/bore contractor.
3. Manufacturer's information on equipment to be used.
4. Methods and materials for retaining walls for jacking and receiving pits.
5. Bore Report that details final alignment, dimensions, and record documentation.

14.05 CASING PIPE

All casings shall be installed accurately to line and grade and shall meet all requirements of the prevailing rights-of-way holder. Casings shall be new and of domestic material and manufacture.

Pipe casing shall be welded steel conforming to the requirements of AWWA C200 and ASTM A-139,Grade B. The pipe shall be coated internally and externally with Tnemec 46H-413 Hi-Build Tneme-tar per manufacturer's recommendations.

Joints shall be full penetration butt welded in accordance with the requirements of AWWA C206. The joints shall be double groove welded with continuous circumferential welds and field lined and coated in accordance with AWWA C203.

All casings shall be in conformance with the specifications as shown on the plans and detail sheets.

14.06 CARRIER PIPE

All carrier pipe shall be Class 50 ductile iron pipe with joint restraints or fully restrained PVC pipe.

14.07 CASING SPACERS

The carrier pipe shall be installed in the casing on spacer skids. The supports shall be dimensioned to center the carrier pipe in the casing with a top clearance of one-half inch. The height of the supports and runners combined shall be sufficient to provide not less than three-quarter inch between the casing pipe and outside diameter of the carrier pipe joints.

Adequate casing spacers shall be provided to properly support the carrier pipe and maintain pipe deflection within the pipe manufacturer's requirements. In any case, not less than three spacers for each individual length of carrier pipe shall be provided.

For metallic casing spacers, bolts, nuts, and washers shall be 316 stainless steel. Shell shall be min. 14 gauge 304 stainless steel. Risers shall be min. 10 gauge 304 stainless steel.

For metallic casing spacers, each shell shall be lined with a min. thickness of 0.090" ribbed PVC/EPDM extrusion with a min. Durometer "A" 85-90 hardness.

For metallic casing spacers, each riser shall have runners (bearing surfaces) made of ultra-high molecular weight polyethylene (UHMWPE) or glass filled polymer plastic to provide abrasion resistance and a low coefficient of friction.

For nonmetallic casing spacers, the runners (bearing surfaces) shall be of a projection type. The projections shall be made of preformed sections of HDPE or virgin polypropylene and shall conform to ISO 9001:2000 for strength and quality. The casing spacers shall be sized in accordance to the manufacturer's recommendations.

14.08 TUNNEL LINER PLATES

Tunnel liner plates shall be asphalt coated galvanized steel plates. The Contractor shall submit plans signed and sealed by a registered Engineer in the State of Florida and written installation procedures with his request for approval.

14.09 CASING END SEALS

Contractor shall provide properly sized rubber end seals to completely close both openings on either side of the casing.

Ends seals shall be pull on (seamless) or wrap around with 316 stainless steel straps for securing to the carrier pipe and the casing.

The seals shall have min. thickness of 1/8 inch of specially compounded synthetic rubber.

14.10 CONSTRUCTION

The Contractor shall provide all labor, material, equipment and appurtenances required for jacking the casing pipe beneath the roadway or railroad tracks. The casing pipe shall be welded steel pipe and jacked in one continuous operation at the locations shown on the drawings. Once the operation starts, jacking shall not be discontinued. Proper alignment and elevation of the casing pipe shall be consistently maintained throughout the jacking operation. The casing pipe shall be installed by jacking and to the length shown on the plans.

The installation of the casing and boring at the head of the casing shall be one simultaneously. Track guides of sufficient length to carry the power unit and pipe installation shall be used, in order to maintain proper line and grade of the casing. Surplus and unsuitable excavated material shall be disposed of by the Contractor.

The Contractor shall shore the jacking pits with sheeting or such other materials as required. Sheeting shall be driven to a sufficient depth below the invert of the steel casing pipe to resist any pressure developed by the soil outside the jacking pit. Sheeting shall terminate not less than 3-feet, 6-inches above existing grade. The Contractor shall install adequate protective railing or temporary fences around the pits within the crossing right-of-way at all times during construction.

The sections of casing pipe shall be field welded in accordance with the applicable portions of AWWA C206 for field welded water pipe joints. Steel casing pipes shall receive one (1) internal and external coat of Tnemec 46H-413 Hi-Build Tneme-tar applied in accordance with manufacturer's recommendation.

All surfaces shall be smooth and uniform without bulges, dents, or warping of lengths, and only new pipe shall be used. Finished lengths of pipe shall be furnished with beveled cut ends to facilitate proper welding of transverse joints. The diameter and wall thickness of the pipe shown on the drawings is the minimum required and no extra compensation shall be claimed by the Contractor if a larger and thicker pipe is used. It will be the Contractor's responsibility in the event that the casing does buckle or collapse during these operations.

At the completion of the jacking operations, the Contractor shall be required to leave all sheeting in place. The top of the sheeting shall be cut off 36-inches below finished grade.

The Contractor shall be responsible for preventing voids outside the casing pipe. Should they occur, the Contractor may be directed to fill them with grout in a method approved by the City. The Contractor shall exercise care in the sleeve removal to prevent voids.

The Contractor shall be responsible for furnishing, installing and removing the thrust block or restraint which was employed in driving the sleeve forward. No additional payment for the jacking restraint shall be made other than the unit price for this item. The entire jacking operation shall be discussed and accepted by the City prior to commencing jack and bore operation. After completion, the backup structures shall be removed in part or whole to permit construction of the pipeline in the sleeve.

Tunneling for the installation of large carrier pipe may be substituted for jacking and boring

when approved by the Engineer.

14.11 INSTALLING CARRIER PIPE IN CASING PIPE

The Contractor shall install the carrier pipe in full conformity with the Contract Documents. The pipe shall be installed to the lines and grades required within the casing pipe and placed to the acceptance of the City. The carrier pipe shall be braced to the side and the top of the casing pipe to prevent flotation or motion.

A bulkhead or rubber end seals shall be placed at each end of the casing pipe to keep the surrounding soil and material from migrating into the voids of the casing pipe.

14.12 TESTING

The pipe shall be tested as provided in the Contract Documents.

END OF SECTION

THIS PAGE INTENTIONALLY LEFT BLANK

SECTION 15 - FLUSHING, TESTING AND DISINFECTION

15.01 SCOPE OF WORK

A. Flushing, Pressure Testing, and Disinfection of systems including, but not limited to, the pipelines shown in the Contract Documents.

B. Contractor shall furnish all necessary pumps, hoses, piping, fittings, meters, gauges, chemicals and labor to conduct specified testing.

C. Testing shall be repeated at the Contractor's expense until satisfactory results are achieved.

15.02 REFERENCES

A. AWWA C651 - Standard for Disinfecting Water Mains.

B. UNI-B-6 - Recommended Practice for Low-Pressure Air Testing of Installed Sewer Pipe

C. ASTM F1417 - Standard Test Method for Installation Acceptance of Plastic Gravity Sewer Lines Using Low-Pressure Air

D. AWWA C600 – Standards for Installation of Ductile-Iron Water Mains and Their Appurtenances.

E. AWWA C605 - Standard for Underground Installation of Polyvinyl Chloride (PVC) Pressure Pipe and Fittings for Water.

F. ASTM 2164 - Standard Practice for Field Leak Testing of Polyethylene (PE) and Crosslinked Polyethylene (PEX) Pressure Piping Systems Using Hydrostatic Pressure

15.03 SUBMITTALS

A. Test Reports: Indicate results comparative to specified requirements. Submit two (2) copies of test results to Engineer in accordance with Submittal specifications.

B. Final approval of the bacterial samples shall be received from the Florida Department of Environmental Protection prior to the time that the system is placed into operation. Sampling procedures shall be done in accordance with FDEP requirements.

C. Bacteriological sampling locations shall meet FDEP requirements and be taken where shown on the drawings and as directed by the Engineer at no additional cost to Owner. Costs for all bacteriological testing shall be borne by the Contractor.

15.04 QUALITY ASSURANCE

A. Perform Work in accordance with these specifications, applicable utility provider standards, and the applicable reference standards listed in Section 1.03 above.

15.05 REGULATORY REQUIREMENTS

A. Conform to applicable FDEP requirements for performing the work of this Section.

15.06 DISINFECTION CHEMICALS

A. Chemicals: The disinfecting agent shall be sodium hypochlorite solution ANSI/AWWA B303 or liquid chlorine ANSI/AWWA B301. Dry hypochlorite, similar to "HTH" or equal may also be used as the disinfecting agent. Bleach or Clorox is not acceptable.

15.07 FLUSHING AND PRESSURE TESTING - PIPING

The Contractor shall furnish and install suitable temporary testing plugs or caps for the water lines, all necessary pressure pumps, hose, pipe connections, meters, gauges and other similar equipment, and all labor required, all without additional compensation for conducting pressure and leakage tests and flushing of the new water lines. Flushing and pressure testing shall be conducted in the following order:

A. After all piping lines have been installed and before pressure testing and final connections to equipment, each run of pipe shall be thoroughly flushed so as to remove all debris and foreign matter from the piping and equipment. Clean and flush all piping using potable water. Cleaning and Flushing shall be achieved by pigging with two (2) polyurethane foam pigs as manufactured by Girard Poly-Pig Inc. or "an approved equal". For watermain installation, the Contractor must ensure that there will be no contaminated water re-entering the main where the pig is flushed out, or it will be re-pigged at the Contractor's expense. Each pig will run through the line prior to running the second pig. On short runs (100 feet or less), or small lines (less than 4"), cleaning shall be accomplished by flushing with a minimum velocity of 2.5 feet per second. Contractor shall furnish and install required pig launch and exit assemblies. Non-abrasive pigs shall be employed. Flushed water may be discharged to the closest public catch basins and be coordinated with the City. Contractor to provide means of discharging water to catch basins at Contractor's expense.

B. Pressure and leakage tests shall be conducted in the presence of the Engineer, or his representative. All pressure mains, fittings, water services, and appurtenances shall undergo pressure and leakage tests. The Contractor will provide all necessary apparatus including a suitable pressure gage, pump, measuring device, piping connections and fittings and the necessary labor to conduct the test. Leakage is defined as the quantity of water added to the pipe being tested during the test period. The Contractor shall submit to the Engineer the testing pattern he proposes to follow prior to testing for the Engineer's approval. The Contractor shall not test more than 1,500 feet of pipe in a single test without approval from the Engineer.

C. In preparation for pressure testing the following parameters must be followed:

1. All air must be vented from the pipeline prior to pressurization. This may be accomplished with the use of the air relief valves or corporation stop valves, vent piping in the testing hardware or end caps, or any other method which adequately allows air to escape the pipeline at all high points. Venting may also be

accomplished by 'flushing' the pipeline in accordance with the parameters and procedures as described in AWWA C600/C605.

2. The pipeline must be fully restrained prior to pressurization. This includes complete installation of all mechanical restraints per the restraint manufacturer's guidelines, whether permanent or temporary to the final installation. This also includes the installation and curing of any and all required thrust blocking. All appurtenances included in the pressure test, including valves, blow-offs, and air-relief valves shall be checked for proper installation and restraint prior to beginning the test.
3. Temporary pipeline alignments that are being tested, such as those that are partially installed in their permanent location shall be configured to minimize the amount of potentially trapped air in the pipeline.

15.07.01 PRESSURE TESTING DUCTILE IRON AND PVC PIPING SYSTEMS:

1. The test pressure for piping constructed of ductile iron and PVC pipe shall be a minimum of 150 psi and this pressure shall be maintained for a period of not less than two hours. Tests shall be made between valves and as far as practicable and as approved by the Engineer. Potable water from the distribution system shall be used. Pressure shall not vary more than five (5) psi for piping during the test periods or as approved by the Engineer. Additionally, allowable leakage shall be computed on the basis of AWWA C-600, C-605 where practical.
2. All leaks evident at the surface shall be uncovered and repaired regardless of the total leakage as indicated by the test, and all pipes, valves and fittings and other materials found defective under the test shall be removed and replaced at the Contractor's expense. Tests shall be repeated until leakage has been reduced below the allowable amount.
3. Should, in the judgment of the Engineer, it not be practical to follow the foregoing procedures exactly for any reason, modifications in the procedure shall be made as approved by the Engineer and the City.

15.07.02 PRESSURE TESTING HDPE PIPING SYSTEMS:

1. The HDPE pipe installed by the directional drill method shall be pressure tested after the entire length is installed.

2. The test pressure for all piping systems shall be a minimum of 150 psi and this pressure shall be maintained for a period of two hours. Testing procedure shall be in accordance with ASTM F2164 and generally as follows.

    a. Take safety precautions as required and as specified in ASTM F2164.
    b. Completely fill pipe with clean water and remove all air from pipe to be tested.
    c. Allow water in pipe to equalize to a common temperature with surrounding ground/groundwater for 24 hours
    d. With air removed and temperature equalized, gradually bring pipe being tested to test pressure plus 10 psi. If test pressure cannot be achieved, discontinue testing and correct fault.

e. Add make-up liquid as required to maintain test pressure plus 10 psi over a 4 hour period.
f. Test Phase - Immediately following the end of the 4 hour period, reduce pressure by 10 psi and monitor pressure for 1 hour. Do not increase pressure or add make up water.
g. Pass/Fail Criteria - If no leakage is observed, and pressure during the test phase remains steady (within 5% of the test pressure) for the 1 hour test phase period, a passing test is indicated.
h. Retesting – If retesting is necessary, depressurize the test section in accordance with ASTM F2164 and correct any faults. Do not attempt to correct any faults while the system is under pressure.
i. Allow the test section to "relax" for at least 8 hours before re-pressurizing. After the relaxation period, repeat the initial expansion and test phases as described above.
j. All leaks shall be repaired regardless of the total leakage as indicated by the test, and all pipes, valves and fittings and other materials found defective under the test shall be removed and re placed at the Contractor's expense. Tests shall be repeated until leakage has been reduced below the allowable amount.
k. All visible leaks shall be repaired regardless of the total leakage as indicated by the test, and all pipes, valves and fittings and other materials found defective under the test shall be removed and replaced at the Contractor's expense. Tests shall be repeated until leakage has been reduced below the allowable amount.
l. Should, in the judgment of the Engineer, it not be practical to follow the foregoing procedures exactly for any reason, modifications in the procedure shall be made as approved by the Engineer. In any event, the Contractor shall be responsible for the ultimate tightness of the watermain within the preceding requirements.

15.07.03 PRESSURE TESTING FUSIBLE PVC SYSTEMS:

1. Fusible PVC pipe installed by the directional drill method shall be pressure tested after the entire length is installed.

2. The test pressure for the water piping constructed fusible PVC pipe shall be a minimum of 150 psi. This pressure shall be maintained for a period of not less than two hours. Tests shall be made between valves and as far as practicable and as approved by the Engineer. Potable water from the distribution system shall be used. Pressure shall not vary more than five (5) psi for piping during the test periods or as approved by the Engineer. Additionally, allowable leakage shall be computed on the basis of AWWA C-600, C-605 where practical.

3. All leaks evident at the surface shall be uncovered and repaired regardless of the total leakage as indicated by the test, and all pipes, valves and fittings and other materials found defective under the test shall be removed and replaced at the Contractor's expense. Tests shall be repeated until leakage has been reduced below the allowable amount.

4. Should, in the judgment of the Engineer, it not be practical to follow the foregoing procedures exactly for any reason, modifications in the procedure shall be made as approved by the Engineer and the City. In any event, the Contractor shall be responsible for the ultimate water tightness of the piping within the preceding requirements

15.07.04 LEAKAGE TESTING FOR NON-PRESSURE PIPING

A. Gravity sanitary sewers need to be tested for leakage.

B. Gravity sanitary sewer leakage testing may include appropriate water or low pressure air testing. The leakage outward or inward (exfiltration or infiltration) shall not exceed 25 gallons per inch of pipe diameter per mile per day for any section of the system. An exfiltration or infiltration test shall be performed with a minimum positive head of two feet. The air test, if used, shall be conducted in accordance with one of the following Standards:

1. ASTM F1417
2. UNI-B-6

C. The testing method selected shall properly consider the existing groundwater elevations during the test.

15.07.05 DEFLECTION TESTING FOR NON-PRESSURE PIPING

D. After completion of the backfill, the engineer or owner may require that a deflection test be performed.

E. Deflection tests should be conducted using a go/no-go mandrel. The mandrel's outside dimension shall be sized to permit no more than 7.5 percent deflection. The percent deflection shall be established from the base inside diameter of the pipe. If the internal beading of the fused joints for the pipe is not required to be removed, the mandrel shall account for this clearance as well. The mandrel shall be approved by the owner or engineer prior to use. Lines that permit safe entry may allow other deflection test options, such as direct measurements.

15.08 DISINFECTION FOR WATER MAIN INSTALLATION

A. The Contractor shall furnish and install suitable temporary connections to the piping, all necessary pressure pumps, hose, pipe connections, meters, gauges and other similar equipment, and all labor required, all without additional compensation for the disinfection of all required potable water piping systems. Disinfection shall be in accordance with the City. If no standards exist, disinfection shall be conducted on the following systems in the following manner:

1. All relocated and new potable water and private fire line piping.

B. Conform to AWWA Standards and as modified herein.

C. Maintain disinfectant for a minimum of 8 hours in such a manner that the entire system will be filled with water containing a minimum chlorine concentration of 50 ppm at any point.

D. After the disinfecting agents have been permitted to remain for the specified contact periods, the water lines, and valves shall be thoroughly flushed with water until the residual chlorine tests are less than 4 PPM in each instance. The determination of the amount of residual chlorine in the system shall be made at such points and in accord with standard tests by means of a standard orthotolodine test set.

E. Replace permanent system devices removed for disinfection.

15.09 BACTERIOLOGICAL SAMPLING FOR WATER MAIN INSTALLATION

A. It shall be the responsibility of the Contractor under this contract to perform the bacteriological testing required by the Florida Department of Environmental Protection and the City to obtain clearance of all piping. The Contractor shall be responsible to disinfect and repeat testing as needed until clearance is obtained for all required systems. The Contractor shall be responsible to pay for additional water needed if the bacteriological testing must be repeated.

B. The piping requires two (2) passing consecutive daily samples taken from the locations called out on the plans or as determined by the Engineer. The samples shall be taken concurrently at all the respective sample point locations.

C. Sampling must be coordinated with Engineer and other construction activities so as to minimize re-sampling.

D. Contractor shall submit schedule for bacteriological testing and pressure tests.

E. The Contractor shall incur all costs needed to provide bacteriological clearance of the piping systems.

F. If repeated tests of such samples show the presence of coliform organisms, the disinfection shall be repeated until tests indicate an absence of contamination.

15.10 QUALITY CONTROL

A. The laboratory and personnel collecting bacteriological samples shall be Florida State certified in accordance with FDEP requirements.

15.11 CONNECTIONS TO EXISTING MAINS

A. The Contractor shall make connections to existing mains as shown on the drawings only after the new mains have passed their pressure and leakage test and completed the disinfection and bacteriological clearance procedures as required.

END OF SECTION

SECTION 16 - SANITARY SEWER BYPASS PUMPING

16.01 SCOPE OF WORK

The Contractor shall furnish all labor, materials, equipment and incidentals required to maintain existing and anticipated flows within the affected portion of the collection system throughout the construction period.

16.02 PUBLIC IMPACTS

The contractor shall not create a public nuisance due to excessive noise or dust, nor impact the public with flooding of adjacent lands, discharge of raw sewage, or release of other potential hazards, nor shall he encroach on or limit access to adjacent lands. No extra charge may be made for increased costs to the contractor due to any of the above.

16.03 SUBMITTALS

The Contractor shall, within 30 days of the date of the Notice to Proceed, submit to the Project Manager a detailed Bypass Pumping Plan for each site by-pass pumping will be needed. The Bypass Pumping Plan shall address all measures and systems to prevent a sanitary sewer overflow (SSO) as defined by the EPA. The Plan shall include as a minimum:

A. Working drawings and sketches showing work location, pump location, piping layout & routing. Show all proposed encroachment and access impacts on adjacent properties or facilities.
B. Pump, control, alarm and pipe specifications or catalog cuts. Detailed sketch of controls and alarm system.
C. Power requirements and details on methods to provide by-pass power or fueling.
D. Calculation and determination of response times to prevent an SSO after a high-water alarm.
E. Procedures to be taken in case of power, pump, or piping failures; including contact names and numbers for emergency notifications.
F. Frequency and specific responsibility for monitoring pump operation, fuel levels, pump maintenance and entire length of piping.

16.04 EQUIPMENT

A. Pumps:

1. By-pass pumping system shall consist of at least a primary pump and a backup pump. Each pump shall have a minimum pumping capacity of 150% of the anticipated peak flows. When bypassing a pump station, 150% of the lift station capacity (G.P.M. & T.D.H) shall be provided.
2. Pumps shall be low noise or sound attenuated. The noise level at any operating condition, in any direction, shall not exceed 70dBA at a distance of twenty-three (23) feet (7 meters) from the pump and/or power source.

B. Controls:

The by-pass pump system shall be equipped with automatic controls and an alarm system. The automatic controls will automatically start the backup pump in the event of a high-water condition or failure of the primary pump. The alarm system will immediately notify the Contractor of a pump failure or high-water condition.

C. Pipe:

Pipe shall be of adequate size and capacity to match the pumps. Pipe type and materials will depend on the particulars of the site conditions and shall be detailed in the Bypass Pumping Plan. Contractor will provide all connections.

16.05 SITE CONDITIONS

Site conditions will vary by site. Contractor is responsible to determine and address requirements such as traffic control, excavation, connections & fittings, impacts on access to adjacent properties, routing and support of by-pass piping, etc., in the Bypass Pumping Plan.

16.06 ON-SITE MONITORING

A. The Contractor shall have personnel experienced with the pumps and controls on site within the calculated response time to prevent an SSO after a high-water alarm.

B. During by-pass operations, the Contractor shall have posted on site with the permit, a copy of the approved Plan and the name and 24-hour contact number of the primary response person, the job site superintendent, and the construction company owner.

16.07 OPERATIONS

A. The Contractor is responsible for securing and providing power, fuel, site security, traffic control and all other supplies, materials and permits required for the by-pass pumping.

B. Contractor shall demonstrate automatic pump switching and alarm system to the satisfaction of the City of St. Pete Beach, prior to beginning by-pass pumping.

Satisfactory demonstration shall be documented by the engineer's, PM's or the City's dated signature on the posted copy of the approved Bypass Pumping Plan.

16.08 DAMAGE RESTORATION & REMEDIATION

A. The Contractor shall be responsible for any pre-pump notifications, all restoration of pre-pump conditions and any damage caused by by-pass operations.

B. Should there be an SSO caused by or as a direct result of the by-pass pumping, the contractor is responsible for all immediate & long term response, notifications, clean up, mitigation, etc. Copies of all written response plans, notifications, documentation, mitigation plans, etc., shall be submitted to the City.

END OF SECTION

THIS PAGE INTENTIONALLY LEFT BLANK

SECTION 17 - VALVES AND APPURTENANCES

17.01 GENERAL

17.01.01 SCOPE OF WORK

The Contractor shall furnish all labor, materials, equipment and incidentals required and install complete and ready for operation all valves and appurtenances as shown on the Contract Drawings and as specified herein.

All valves and appurtenances shall be of the size shown on the Contract Drawings and, to the extent possible, all equipment of the same type on the Project shall be from one manufacturer.

All valves and appurtenances shall have the name of the manufacturer and the working pressure for which they are designed cast in raised letters upon some appropriate part of the body.

All valves shall have a factory applied, fusion bonded epoxy coating on interior and exterior unless noted otherwise in the Contract Drawings or the Specifications.

Any valve, unless otherwise specified, that is removed from the system shall become the property of the Contractor and he shall insure proper disposal.

The equipment shall include, but not be limited to, the following:

1. Gate valves (Sec. 17.03)
2. Pressure Sustaining and Check Valves (Sec. 17.04)
3. Ball Valves for PVC Pipe (Sec. 17.05)
4. Butterfly Valves (Sec. 17.06)
5. Plug Valves (Sec. 17.07)
6. Valve Actuators (Sec. 17.08)
7. Air Release Valves (Sec. 17.09)
8. Valves Boxes (Sec. 17.10)
9. Corporation Cocks (Sec. 17.11)
10. Flange Adapter Couplings (Sec. 17.12)
11. Flexible Couplings (Sec. 17.13)
12. Hose Bibs (Sec. 17.14)
13. Slow Closing Air and Vacuum Valves (Sec. 17.15)
14. Surge Anticipator Valve (Sec. 17.16)
15. Check Valves (Sec. 17.17)
16. Hydrants (Sec. 17.18)
17. Restraining Clamps (Sec. 17.19)
18. Tapping Sleeves and Tapping Valves (Sec. 17.20)
19. Single Acting Altitude Valves (Sec. 17.21)

17.01.02 DESCRIPTION OF SYSTEMS

All of the equipment and materials specified herein are intended to be standard for use in

controlling the flow of potable water, reclaim water, wastewater, etc., depending on the applications.

17.01.03 QUALIFICATIONS

All of the types of valves and appurtenances shall be products of well-established reputable firms who are fully experienced and qualified in the manufacture of the particular equipment to be furnished. The equipment shall be designed, constructed and installed in accordance with the best practices and methods and shall comply with these Specifications as applicable. Valves shall be as covered under mechanical devices in Section 8 of ANSI/NSF Standard 61.

17.01.04 SUBMITTALS

Submittals shall conform to the following:

A. Submit to the City within 30 days after execution of the contract a list of materials to be furnished, the names of the suppliers and the date of delivery of materials to the site.

B. Complete shop drawings of all valves and appurtenances shall be submitted to the City and Engineer for review and acceptance in accordance with the Specifications.

17.02 TOOLS

Special tools, if required for normal operation and maintenance shall be supplied with the equipment.

17.03 GATE VALVES

Gate Valves shall conform to the following:

A. All buried valves shall have cast or ductile iron three (3) piece valve bodies.

B. Where indicated on the Contract Drawings or necessary due to locations, size, or inaccessibility, chain wheel operators shall be furnished with the valves. Such operators shall be designed with adequate strength for the valves with which they are supplied and provide for easy operation of the valve. Chains for valve operators shall be galvanized.

C. Where required, gate valves shall be provided with a box cast in a concrete slab and a box cover. Length of box shall include slab thickness. Box cover opening shall be for valve stem and nut. Valve wrenches and extension stems shall be provided by the manufacturer to actuate the valves. The floor box and cover shall be equal to those manufactured by Rodney Hunt Machine Company, Orange, Massachusetts, Clow, DeZurik or approved equal.

D. Gate valves with 3inch-20inch diameters shall be resilient seated, manufactured to meet or exceed the requirements of AWWA C509 or C515 and UL/FM of latest revision and in accordance with the following specifications. Valves shall have an unobstructed waterway equal to or greater than the full nominal diameter of the valve.

E. Wrench nut shall be provided for operating the valve.

F. Valves shall be suitable for an operating pressure of 200 psi and shall be tested in accordance with AWWA C509 or C515. Mueller, Kennedy, M&H, and Clow are acceptable valves.

G. All bonnet bolts, nuts and studs shall be stainless steel.

17.04 PRESSURE SUSTAINING AND CHECK VALVE

Pressure sustaining and check valves shall conform to the following:

A. Pressure sustaining and check valve shall be pilot operated diaphragm actuated valve with cast iron body, bronze trim, and 125-pound flanged ends. The valve shall be hydraulically operated, diaphragm type globe valve. The main valve shall have a single removable seat and a resilient disc, of rectangular cross section, surrounded on three and a half sides. The stainless-steel stem shall be fully guided at both ends by a bearing in the valve cover, and an integral bearing in the valve seat. It shall be sleeved at both ends with delrin. No external packing glands are permitted and there shall be no pistons operating the main valve or any controls. The valve shall be equipped with isolation cocks to service the pilot system while permitting flow if necessary. Main valve and all pilot controls shall be manufactured in the United States of America. Valve shall be single chamber type, with seat cut to 5 degrees taper.

B. Valve shall maintain a minimum (adjustable) upstream pressure to a preset (adjustable) maximum. The pilot system shall consist of two direct acting, adjustable, spring loaded diaphragm valves.

C. Valve shall be cast iron (ASTM A48) with main valve trim of brass (QQB-B-626) and bronze (ASTM B61). The pilot control valves shall be cast brass (ASTM B62) with 303 stainless steel trim. All ferrous surfaces inside and outside shall have a 2-part epoxy coating. Valve shall be similar in all respects to CLA-VAL Company, Model 692G-01ABKG, as manufactured by CLA-VAL Company, Winter Park, Florida, or similar pressure sustaining and check valve as manufactured by Golden Alderson; or approved equal.

17.05 BALL VALVES FOR PVC PIPE

Ball valves shall conform to the following:

A. Ball valves for PVC pipe shall be of PVC Type 1 with union, socket, threaded or flanged ends as required. Ball valves shall be full port, full flow, all plastic construction, 150 psi rated with Teflon seat seals and T-handles. PVC ball valves shall be as manufactured by Celanese Piping Systems, Inc., Wallace and Tiernan, Inc., Plastiline, Inc., or approved equal.

B. All valves shall be mounted in such a position that valve position indicators are plainly visible when standing on the floor.

17.06 BUTTERFLY VALVES

Butterfly valves shall conform to the following:

A. Butterfly valves shall conform to the AWWA Standard Specifications for Rubber Seated Butterfly Valves, Designated C504, except as hereinafter specified. Valves, except as specified hereinafter, shall be Class 150A or B, except that valves furnished downstream of the high service pumps shall be Class 250 and equal to those manufactured by Henry Pratt Company, DeZurik, Mueller, or approved equal. M&H/Kennedy/Clow are not generally approved equals. Ductile iron conforming to ASTM A536, Grade 65-45-12 shall be provided for all Class 250 valves. All valves shall be leak tested at 200 psi.

B. The face-to-face dimensions of flanged end valves shall be in accordance with Table 1 of above mentioned AWWA Specification for short-body valve. Adequate two-way thrust bearings shall be provided. Flange drilling shall be in accordance with ANSI B16.1.

C. Valve seats shall be an EPDM elastomer. Valve seats 24 inches and larger shall be field adjustable and replaceable without dismounting operator disc or shaft and without removing the valve from the line. All retaining segments and adjusting devices shall be of corrosion resistant material with stainless Nylock screws and be capable of the 1/8-inch adjustment. Valves 20 inches and smaller shall have bonded or mechanically restrained seats as outlined in AWWA C 504. Where the EPDM seat is mounted on the valve body, the mating edge of the valve disc shall be 18-8 stainless steel or Nickel-Chrome, 80-20%. Where the EPDM seat is mounted on the valve disc, the valve body shall be fitted with an 18-8 stainless steel seat offset from the shaft, mechanically restrained and covering 360 degrees of the peripheral opening or seating surface.

D. The valve body shall be constructed of ductile iron or close grain cast iron per ASTM A126, Class B with integrally cast hubs for shaft bearing housings of the through boss-type. Butterfly valves of the "wafer" or "spool" type will not be accepted.

E. The valve shaft shall be turned, ground, and polished constructed of 18-8, ASTM A-276, Type 304 stainless steel and designed for both torsional and shearing stresses when the valve is operated under its greatest dynamic or seating torque. Shaft shall be of either a one-piece unit extending full size through the valve disc and valve bearing or it may be of a stub shaft design. Shaft bearings shall be Teflon or nylon, self-lubricated type.

F. All valves shall be subject to hydrostatic and leakage tests at the point of manufacture. The hydrostatic test for Class 250 valves shall be performed with an internal hydrostatic pressure equal to 500 psi applied to the inside of the valve body of each valve for a period of five minutes. During the hydrostatic test, there shall be no leakage through the metal, the end joints or the valve shaft seal. The leakage test for the Class 250 valves shall be performed at a differential pressure of 230 psi and against both sides of the valve. No adjustment of the valve disc shall be necessary after pressure test for normal operation of valve. The Class 150 valves shall be tested in conformance with AWWA C-504.

G. In general, the butterfly valve operators shall conform to the requirements of Section 3.8 of the AWWA Standard Specifications for Rubber Seated Butterfly Valves, Designation C504, insofar as

applicable, and as herein specified.

H. Gearing for the operators shall be totally enclosed in a gear case in accordance with paragraph 3.8.3 of the above mentioned AWWA Standard Specification.

I. Operators shall be capable of seating and unseating the disc against the full design pressure of velocity, as specified for each class, into a dry system downstream and shall transmit a minimum torque to the valve. Operators shall be rigidly attached to the valve body.

J. The manufacturer shall certify that the required tests on the various materials and on the completed valves have been satisfactory and that the valves conform with all requirements of this Specification and the AWWA standard.

K. Where indicated on the Contract Drawings, extension stems, floor stands, couplings, stem guides, and floor boxes as required shall be furnished and installed.

17.07 PLUG VALVES

Plug valves shall conform to the following:

A. All plug valves shall be eccentric plug valves capable of sustaining 150 psi in either direction without leaking.

Exception: Single direction plug valves may be used if it is clearly demonstrated they will never be required to resist pressure in both directions either in service or during pipe line testing.

B. Plug valves shall be tested in accordance with current AWWA Standard C-504-80 Section 5. Each valve shall be performance tested in accordance with paragraph 5.2 and shall be given a leakage test and hydrostatic test as described in paragraphs 5.3 and 5.4. Plug valves shall be Kennedy or Dezurik.

C. Plug valves shall be of the non-lubricated eccentric type with resilient faced plugs and shall be furnished with end connections as shown on the Contract Drawings. Flanged valves shall be faced and drilled to the ANSI 150 lb. standard. Mechanical joint ends shall be to the AWWA Standard C111-72. Bell ends shall be to the AWWA Standard C100-55 Class B. Screwed ends shall be to the NPT standard.

D. Plug valve bodies shall be of ASTM A126 Class B Semi-steel, 31,000 psi tensile strength minimum in compliance with AWWA Standard C507-73, Section 5.1 and AWWA Standard C504-70 Section 6.4. Port areas for valves 20-inches and smaller shall be full port 100 percent of full pipe area. Valves 24-inch and larger shall have a minimum port area between 80 and 100 percent of full nominal pipe area. All exposed nuts, bolts, springs, washers, etc. shall be zinc or cadmium plated. Resilient plug facings shall be of Hycar or Neoprene.

E. Plug valves shall be furnished with permanently lubricated stainless steel or oil-impregnated bronze upper and lower plug stem bushings. These bearings shall comply with current AWWA Standards.

17.08 VALVE ACTUATORS

17.08.01 GENERAL

A. All valve actuators shall conform to Section 3.8 of the AWWA Standard Specification and shall be either manual or motor operated.

B. Actuators shall be capable of seating and unseating the disc against the full design pressure and velocity, as specified for each class, into a dry system downstream, and shall transmit a minimum torque to the valve. Actuators shall be rigidly attached to the valve body.

C. Butterfly valve actuators shall conform to the requirements of Section 3.8 of the AWWA Standard specifications for Rubber Seated Butterfly Valves, Designated C504, insofar as applicable and as herein specified.

17.08.02 MANUAL ACTUATORS

A. Manual actuators shall have permanently lubricated, totally enclosed gearing with handwheel and gear ratio sized on the basis of actual line pressure and velocities. Actuators shall be equipped with handwheel, position indicator, and mechanical stop-limiting locking devices to prevent over travel of the disc in the open and closed positions. They shall turn counter-clockwise to open valves. Manual actuators shall be of the traveling nut, self-locking type and shall be designed to hold the valve in any intermediate position between fully open and fully closed without creeping or fluttering. Actuators shall be fully enclosed and designed to produce the specified torque with a maximum pull of 80 pounds on the handwheel or chainwheel. Actuator components shall withstand an input of 450 foot pounds for 30-inch and smaller and 300 foot pounds for larger than 30-inch size valves at extreme actuator positions without damage. Valves located above grade shall have handwheel and position indicator, and valves located below grade shall be equipped with a 2-inch square AWWA operating nut located at ground level and cast-iron extension type valve box. Valve actuators shall conform to AWWA C504, latest revision.

17.08.03 MOTOR ACTUATORS (MODULATING)

A. The motor actuated valve controller shall include the motor, actuator unit gearing, limit switch gearing, limit switches, position transmitter which shall transmit a 4-20 mA DC signal, control power transformer, electronic controller which will position the valve based on a remote 4-20 milliamp signal, torque switches, bored and key-wayed drive sleeve for non-rising stem valves, declutch lever and auxiliary handwheel as a self-contained unit.

B. The motor shall be specifically designed for valve actuator service using 480-volt, 60 Hertz, three phase power as shown, on the electrical drawings. The motor shall be sized to provide an output torque and shall be the totally enclosed, non-ventilated type. The power gearing shall consist of helical gears fabricated from heat treated alloy steel forming the first stage of reduction. The second reduction stage shall be a single stage worm gear. The worm shall be of alloy steel with carburized threads hardened and ground for high

efficiency. The worm gear shall be of high tensile strength bronze with hobbed teeth. All power gearing shall be grease lubricated. Ball or roller bearings shall be used throughout. Preference will be given to units having a minimum number of gears and moving parts. Spur gear reduction shall be provided as required.

C. Limit switches and gearing shall be an integral part of the valve control. The limit switch gearing shall be made of bronze and shall be grease lubricated, intermittent type and totally enclosed to prevent dirt and foreign matter from entering the gear train. Limit switches shall be of the adjustable type capable of being adjusted to trip at any point between fully opened valve and fully closed valve.

D. The speed of the actuator shall be the responsibility of the system supplier with regard to hydraulic requirements and response compatibility with other components within the control loop. Each valve controller shall be provided with a minimum of two rotor type gear limit switches, one for opening and one for closing. The rotor type gear limit switch shall have two normally open and two normally closed contacts per rotor. Gear limit switches must be geared to the driving mechanism and in step at all times whether in motor or manual operation. Provision shall be made for two additional rotors as described above, each to have two normally open and two normally closed contacts. Each valve controller shall be equipped with a double torque switch. The torque switch shall be adjustable and will be responsive to load encountered in either direction of travel. It shall operate during the complete cycle without auxiliary relays or devices to protect the valve, should excessive load be met by obstructions in either direction of travel. The torque switch shall be provided with double-pole contacts.

E. A permanently mounted handwheel shall be provided for manual operation. The handwheel shall not rotate during electric operations but must be responsive to manual operation at all times except when being electrically operated. The motor shall not rotate during hand operation nor shall a fused motor prevent manual operation. When in manual operating position, the unit will remain in this position until motor is energized at which time the valve operator will automatically return to electric operation and shall remain in motor position until handwheel operation is desired. This movement from motor operation to handwheel operation shall be accomplished by a positive declutching lever which will disengage the motor and motor gearing mechanically, but not electrically. Hand operation must be reasonably fast. It shall be impossible to place the unit in manual operation when the motor is running. The gear limit switches and torque switches shall be housed in a single easily accessible compartment integral with the power compartment of the valve control. All wiring shall be accessible through this compartment. Stepping motor drives will not be acceptable.

F. The motor with its control module must be capable of continuously modulating over its entire range without interruption by heat protection devices. The system, including the operator and control module must be able to function, without override protection of any kind, down to zero dead zone.

G. All units shall have strip heaters in both the motor and limit switch compartments.

H. The actuator shall be equipped with open-stop-close push buttons, an auto-manual selector switch, and indicating lights, all mounted on the actuator or on a separate locally mounted power control station.

I. The electronics for the electric operator shall be protected against temporary submergence.

J. Actuators shall be Limitorque L120 with Modutronic Control System containing a position transmitter with a 4-20MA output signal or equal.

17.08.04 MOTOR ACTUATORS (OPEN-CLOSE)

A. The electronic motor-driven valve actuator shall include the motor, actuator gearing, limit switch gearing, limit switches, torque switches, fully machined drive sleeve, declutch lever, and auxiliary handwheel as a self-contained unit.

B. The motor shall be specifically designed for valve actuator service and shall be of high torque totally enclosed, nonventilated construction, with motor leads brought into the limit switch compartment without having external piping or conduit box.

a) The motor shall be of sufficient size to open or close the valve against maximum differential pressure when voltage to motor terminals is 10% above or below nominal voltage.
b) The motor shall be prelubricated and all bearings shall be of the anti-friction type.

C. The power gearing shall consist of helical gears fabricated from heat treated steel and worm gearing. The worm shall be carburized and hardened alloy steel with the threads ground after heat treating. The worm gear shall be of alloy bronze accurately cut with a hobbing machine. All power gearing shall be grease lubricated. Ball or roller bearings shall be used throughout.

D. Limit switches and gearing shall be an integral part of the valve actuator. The switches shall be of the adjustable rotor type capable of being adjusted to trip at any point between fully opened valve and fully closed valve. Each valve controller shall be provided with a minimum of two rotor type gear limit switches, one for opening and one for closing (influent valves require additional contacts to allow stopping at an intermediate position). The rotor type gear limit switch shall have two normally open and two normally closed contacts per toro. Additional switches shall be provided if shown on the control and/or instrumentation diagrams. Limit switches shall be geared to the driving mechanism and in step at all times whether in motor or manual operation. Each valve actuator shall be equipped with a double torque switch. The torque switch shall be adjustable and will be responsive to load encountered in either direction of travel. It shall operate during the complete cycle without auxiliary relays or devices to protect the valve should excessive load be met by obstructions in either direction of travel. Travel and thrusts shall be independent of wear in valve disc or seat rings.

E. A permanently mounted handwheel shall be provided for manual operation. The

handwheel shall not rotate during electric operation except when being electrically operated. The motor shall not rotate during hand operation, nor shall a fused motor prevent manual operation. When in manual operating position, the unit will remain in this position until motor is energized at which time the valve actuator will automatically return to electric operation and shall remain in motor position until handwheel operation is desired. Movement from motor operation to handwheel operation shall be accomplished by a positive declutching lever which will disengage the motor and motor gearing mechanically, but not electrically. Hand operation must be reasonably fast. It shall be impossible to place the unit in manual operation when the motor is running.

F. Valve actuators shall be equipped with an integral reversing controller and three phase overload relays, Open-Stop-Close push buttons, local-remote-manual selector switch, control circuit transformer, three-phase thermal overload relays and two pilot lights in a NEMA 4X enclosure. In addition to the above, a close coupled air circuit breaker or disconnect switch shall be mounted and wired to the valve input power terminals for the purpose of disconnecting all underground phase conductors.

G. The valve actuator shall be capable of being controlled locally or remotely via a selector switch integral with the actuator. In addition, an auxiliary dry contact shall be provided for remote position feedback.

H. Valve A.C. motors shall be designed for operation on a 480 volt, 3-phase service. Valve control circuit shall operate from a fuse protected 120-volt power supply.

I. Motor operators shall be as manufactured by Limitorque Corporation, Type L120 or approved equal.

17.09 AIR RELEASE VALVES

The air release valves for use in water or force mains shall be installed as shown on the Contract Drawings. The valves shall have a 316 stainless steel body and cover, 316 stainless steel float, plug, seat ring, and internal mechanism, bronze water diffuser, Buna-N or Viton seat, and 316 stainless steel trim and hardware. The fittings shall be threaded. Back flushing attachments shall be included. The air release valves shall be Figure 942 or 942F as manufactured by VAG/GA Industries or approved equal.

17.10 VALVE BOXES

Valve Boxes shall conform to the following:

A. Buried valves shall have cast-iron three-piece valve boxes or HDPE adjustable valve boxes. Cast iron valve boxes shall be provided with suitable heavy bonnets and shall extend to such elevation at or slightly above the finished grade surface as directed by the City. The barrel shall be two-piece, screw type, having a 5 1/4-inch shaft. The upper section shall have a flange at the bottom with sufficient bearing area to prevent settling and shall be complete with cast iron covers. Covers shall have WATER, SEWER, or RECLAIM, as applicable, cast into the top. Lids will be painted “safety” blue for potable, purple for reclaimed, and green for sanitary sewer.

B. All valves shall have actuating nuts extended to within four (4) feet of the top of the valve box. All valve extensions will have a centering guide plate two (2) inches maximum below the actuating nut. The valve extension shall be fastened to the existing nut with a set screw. Valve boxes shall be provided with a concrete base and a valve nameplate engraved with lettering 1/8-inch deep as shown on the Contract Drawings.

C. HDPE adjustable valve boxes shall be one complete assembled unit composed of the valve box and extension stem. All moving parts of the extension stem shall be enclosed in a housing to prevent contact with the soil. Valve box assembly shall be adjustable to accommodate variable trench depths.

D. The entire assembly shall be made of heavy wall high density polyethylene. All exterior components shall be joined with stainless steel screws. The valve box top section shall be adaptable to fit inside a valve box upper section.

E. The stem assembly shall be of a telescoping design that allows for variable adjustment length. The stem material shall be of plated steel square tubing. The stem assembly shall have a built-in device that keeps the stem assembly from disengaging at its fully extended length. The extension stem must be torque tested to 1000 foot pounds. Covers shall have WATER, SEWER or RECLAIMED clearly and permanently impressed into the top surface.

17.11 CORPORATION COCKS

Corporation cocks for connections to cast-iron, ductile iron or steel piping shall be all brass or bronze suitable for 180 psi operating pressure and similar to Mueller Co. H-10046 or approved equal by Clow Corp. and shall be of sizes required and/or noted on the Contract Drawings.

17.12 FLANGE ADAPTER COUPLINGS

Flange adapter couplings shall be of the size and pressure rating required for each installation and shall be suitable for use on either cast iron or ductile iron pipe. They shall be similar or approved equal to Dresser Company, Style 128. All couplings shall have a sufficient number of factory installed anchor studs to meet or exceed a minimum test pressure rating of 230 psi minimum.

17.13 FLEXIBLE COUPLINGS

A. Flexible couplings shall be either the split type or the sleeve type as shown on the Contract Drawings.

B. Split type coupling shall be used with all interior piping and with exterior piping noted on the Contract Drawings. The couplings shall be mechanical type for radius groove piping. The couplings shall mechanically engage and lock grooved pipe ends in a positive couple and allow for angular deflection and contracting and expansion.

C. Couplings shall consist of malleable iron, ASTM Specification A47, Grade 32510 housing clamps in two or more parts, a single chlorinated butyl composition sealing gasket with a "C" shaped cross-section and internal sealing lips projecting diagonally inward, and two or more oval track head type

bolts with hexagonal heavy nuts conforming to ASTM Specification A 183 and A194 to assemble the housing clamps. Bolts and nuts shall be hot dipped galvanized after fabrication.

D. Victualic type couplings and fittings may be used in lieu of flanged joints. Pipes shall be radius grooved as specified for use with the Victaulic couplings. Flanged adapter connections at fittings, valves, and equipment shall be Victaulic Vic Flange Style 741, equal by Gustin-Bacon Group, Division of Certain-Teed Products, Kansas City, Kansas, or approved equal.

E. Sleeve type couplings shall be used with all buried piping. The couplings shall be of steel and shall be Dresser Style 38 or 40, as shown on the Contract Drawings, or equal. The coupling shall be provided with hot dipped galvanized steel bolts and nuts unless indicated otherwise.

F. All couplings shall be furnished with the pipe stop removed.

G. Couplings shall be provided with gaskets of a composition suitable for exposure to the liquid within the pipe.

H. If the Contractor decides to use victaulic couplings in lieu of flanged joints, he shall be responsible for supplying supports for the joints.

17.14 HOSE BIBS

Hose bibs shall be 3/4-inch or 1-inch brass, polished chromium plated brass, with vacuum breaker as noted on the Contract Drawings.

17.15 SLOW CLOSING AIR AND VACUUM VALVES

A. The Contractor shall furnish and install slow closing air and vacuum valves as shown on the Contract Drawings which shall have two (2) independent valves bolted together. The air and vacuum valve shall have all stainless-steel float, guided on both ends with stainless shafts. The air and vacuum valve seat shall be Buna-N to insure drop tight closure. The Buna-N seat shall be fastened to the cover stainless shoulder screws in a manner to prevent distortion of the seat. The float shall be guided at both ends with stainless steel bushings.

B. The valve cover shall have a male lip designed to fit into the body register for accurate alignment of the float into the Buna-N seat. The valve cover shall have 250-pound class flanged outlet connection.

C. The surge check valve shall be bolted to the inlet of the air and vacuum valve and consist of a body, seat, disc, and compression spring. A surge check unit shall operate on the interphase between the kinetic energy and relative velocity flows of air and water, so that after air passes through, and water rushes into the surge check, the disc starts to close, reducing the rate of flow of water into the air valve by means of throttling orifices in the disc to prevent water hammer in the air valves. The surge check orifices must be adjustable type for regulation in the field to suit operating conditions. Valve shall be rated for 250-pound class working pressure.

D. The complete slow closing air and vacuum valve with air release valve shall have been flow tested in the field, substantiated with test data to show reduction of surge pressure in the valve. Flow test data

shall be submitted with initial shop drawings for review and acceptance.

E. Valve exterior to be painted Red Oxide, Phenolic TT-P86, Primer or approved equal for high resistance to corrosion.

F. All materials of construction shall be certified in writing to conform to ASTM specifications as follows:

Air Valve Cover, Body, and Surge Check Body	Cast Iron	ASTM A48, Class 30
Float	Stainless Steel	ASTM A240
Surge Check Seat and Disc	Stainless Steel	ASTM A582
Air Valve Seat Spring	Buna-N Stainless Steel	T302

17.16 SURGE ANTICIPATOR VALVES

A. Surge anticipator valves shall be furnished for the pumping systems as shown on the Contract Drawings. The valve shall be hydraulically operated, pilot controlled, and diaphragm or piston actuated. The main valve shall be cast iron conforming to ASTM A48 with bronze trim conforming to ASTM B61 and flanged ends conforming to ANSI B161.1. The main valve shall be globe type with a single removable seat and a resilient disc.

B. The diaphragm actuated valve shall have a stainless-steel stem guided at both ends by a bearing in the valve cover and an integral bearing surface in the seat. No external packing glands shall be permitted. The valve shall be fully serviceable without removing it from the line. The pilot system shall be of noncorrosive construction and provided with isolation cocks.

C. The piston actuated valve shall operate on the differential piston principle. The valve piston shall be guided on its outside diameter. The valve shall be able to operate in any position and shall be fully serviceable without removing it from the line. The pilot system shall be provided with isolation cocks and be of noncorrosive materials of construction.

D. The valve shall be designed specifically to minimize the effects of water hammer, resulting from power failure at the pumping station, or from normal stopping and starting of pumping operators. The valve shall open hydraulically on a down surge, or low-pressure wave created when the pump stops, remain open during the low-pressure cycle in order to be open when the high-pressure wave returns. The high-pressure pilot shall be adjustable over a 20 to 200 psi range and the low-pressure pilot shall be adjustable over a 15 to 75 psi range. The valve shall be the 250 Class.

17.17 CHECK VALVES

A. Check valves for cast iron and ductile iron pipe lines shall be swing type and shall meet the material requirements of AWWA Specification C508. The valves shall be iron body, bronze mounted, single disc, 175 psi working water pressure and nonshock. Valves shall be as manufactured by Mueller, Clow, Kennedy, or M&H. Valves 8-inch and larger shall be air cushioned to reduce valve slam.

B. When there is no flow through the line, the disc shall hang lightly against its seat in practically a vertical position. When open, the disc shall swing clear of the waterway.

C. Check valves shall have bronze seat and body rings, extended bronze hinge pins and bronze nuts on the bolts of bolted covers. The interior and exterior of the valve body shall have a factory applied fusion bonded or 10 mil 2-part epoxy coating (Protecto 401 or approved equal).

D. Valves shall be so constructed that disc and body seat may easily be removed and replaced without removing the valve from the line. Valves shall be fitted with an extended hinge arm with outside lever and weight. Weights provided and approved by the City shall be installed.

17.18 HYDRANTS

Hydrants shall be AVK Series 2780 Barrel (nostalgic style with stainless steel bolts) American Darling B-84-B or Mueller Super Centurian 250, or approved equal and shall conform to the "Standard Specification for Fire Hydrants for Ordinary Water Works Service", AWWA C502, and UL/FM certified, and shall in addition meet the specific requirements and exceptions which follow:

1. Hydrants shall be according to manufacturer's standard pattern and of standard size and shall have one 4-1/2inch steamer nozzle and two 2-1/2 inch hose nozzles.
2. Hydrant inlet connections shall have mechanical joints for 6 inch ductile-iron pipe.
3. Hydrant valve opening shall have an area at least equal to that area of a 5-1/4 inch minimum diameter circle and be obstructed only by the valve rod. Each hydrant shall be able to deliver 500 gallons minimum through its two 2-1/2 inch hose nozzles when opened together with a loss of not more than 2 psi in the hydrants.
4. Each hydrant shall be designed for installation in a trench that will provide 5-ft. cover.
5. Hydrants shall be hydrostatically tested as specified in AWWA C502.
6. Hydrants shall be rated at 200 psi.
7. All nozzle threads shall be American National Standard.
8. Each nozzle cap shall be provided with a Buna N rubber washer.
9. Hydrants shall be so arranged that the direction of outlets may be turned 90 degrees without interference with the drip mechanism and without the mechanism obstructing the discharge from any outlet.
10. Hydrants must be capable of being extended without removing any operating parts.
11. Hydrants shall have bronze-to-bronze seatings as per AWWA C502-85.
12. Hydrant main valve closure shall be of the compression type opening against the pressure and closing with the pressure. The resilient seat material shall meet the requirements of AWWA C-509 and shall preferably be EPDM Elastomer.
13. Internal and below ground iron parts (bonnet, nozzle section and base) shall have a fusion bonded epoxy coating per AWWA C550. Aboveground external hydrant parts (cap, bonnet and nozzle section) shall be either epoxy coated together with a UV resistant polyester coating or have two shop coats of paint per AWWA C502. The lower stand pipe or barrel shall be protected with asphaltic coatings per AWWA C502.
14. Exterior nuts, bolts and washer shall be stainless steel. Bronze nuts may be used below grade.
15. All internal operating parts shall be removable without requiring excavation.

17.19 RESTRAINING CLAMPS

Restraining clamp assemblies as detailed in the Contract Drawings for use at hydrant connections to water mains, or at fittings where shown on the Contract Drawings, shall be as manufactured by American

Cast Iron Pipe, Star Pipe Products, U.S. Pipe; or approved equal.

17.20 TAPPING SLEEVES AND GATE VALVES

Tapping valves shall meet the requirement of AWWA C500. The valves shall be flanged, shall be mechanical joint outlet with non-rising stem, designed for vertical burial and shall open left or counterclockwise. Stuffing boxes shall be the "O-ring" type. Operating nut shall be AWWA Standard 2-inch square for valves 2-inch and up. The valves shall be provided with an overload seat to permit the use of full size cutters. Gaskets shall cover the entire area of flange surfaces and shall be supplied with EPDM wedges up to 30-inch diameter.

Tapping sleeves and saddles shall seal to the pipe by the use of a confined "O" ring gasket and shall be able to withstand a pressure test of 180 psi for one hour with no leakage in accordance with AWWA C110, latest edition. A stainless steel 3/4-inch NPT test plug shall be provided for pressure testing. All bolts joining the two halves shall be stainless steel and shall be included with the sleeve or saddle. Sleeves and saddles shall be protected from corrosion by being fusion applied epoxy coated or be made of 18-8 Type 304 stainless steel. Saddle straps shall be 18-8 Type 304 stainless steel.

17.21 SINGLE ACTING ALTITUDE VALVES

17.21.01 FUNCTION

A. The altitude control valve shall be of the single acting type, closing off tightly when the water reaches the maximum predetermined level in the tank to prevent overflow; and opening to permit replenishing of the tank supply when the water level drops approximately 6-inch to 12-inch below the maximum level.

B. A hand operated valve in the power water line to the top of the piston shall permit adjustment of the speed of valve closing. The tank water level control shall be by means of a diaphragm operated, spring loaded, three-way pilot which directs power water to or from the top of the main valve piston. The three-way pilot shall be of bronze construction. The diaphragm surface exposed to the tank head shall be not less than 57 sq. inches. It shall be possible to adjust the spring above the diaphragm for water level control approximately 20% above or below the factory setting.

17.21.02 DESCRIPTION

A. The main valve shall operate on the differential piston principle such that the area on the underside of the piston is no less than the pipe area on the upper surface of the piston is of a greater area than the underside of the piston.

B. The valve piston shall be guided on its outside diameter by long stroke stationary Vee ports which shall be downstream of the seating surface to minimize the consequences of throttling. Throttling shall be done by the valve Vee ports and not the valve seating surfaces.

C. The valve shall be capable of operating in any position and shall incorporate only one flanged cover at the valve top from which all internal parts shall be accessible. There shall be no

stems, stem guides, or spokes within the waterway. There shall be no springs to assist the valve operation.

17.21.03 CONSTRUCTION

A. The valve body shall be of cast iron ASTM A-126 with flanges conforming to the latest ANSI Standards. The valve shall be extra heavy construction throughout. The valve interior trim shall be bronze B-62 as well as the main valve operation.

B. The valve seals shall be easily renewable while no diaphragm shall be permitted within the main valve body.

C. All controls and piping shall be of non-corrosive construction.

D. A visual valve position indicator shall be provided for observing the valve piston position at any time.

17.21.04 FIGURE NUMBER

The valves shall be the 20-inch Globe type (Fig. 3200-D) as manufactured by GA Industries of Mars, Pennsylvania, or approved equal.

17.22 INSTALLATION

A. All valves and appurtenances shall be installed in the location shown, true to alignment and rigidly supported. Any damage occurring to the above items before they are installed shall be repaired to the satisfaction of the City.

B. After installation, all valves and appurtenances shall be tested at least two hours at the working pressure corresponding to the class of pipe, unless a different test pressure is specified. If any joint proves to be defective, it shall be repaired to the satisfaction of the City.

C. Install all floor boxes, brackets, extension rods, guides, the various types of operators and appurtenances as shown on the Contract Drawings that are in masonry floors or walls, and install concrete inserts for hangers and supports as soon as forms are erected and before concrete is poured. Before setting these items, the Contractor shall check all Contract Documents which have a direct bearing on their location and he shall be responsible for the proper location of these valves and appurtenances during the construction of the structures.

D. Pipe for use with flexible couplings shall have plain ends as specified in the respective pipe sections.

E. Flanged joints shall be made with high strength, low alloy Corten bolts, nuts and washers. Mechanical joints shall be made with mild corrosion resistant alloy steel bolts and nuts. All exposed bolts shall be painted the same color as the pipe. All buried bolts and nuts shall be heavily coated with two (2) coats of bituminous paint comparable to Inertol No. 66 Special Heavy.

F. Prior to assembly of split couplings, the grooves as well as other parts shall be thoroughly cleaned.

The ends of the pipes and outside of the gaskets shall be moderately coated with petroleum jelly, cup grease, soft soap or graphite paste, and the gasket shall be slipped over one pipe end. After the other pipe has been brought to the correct position, the gasket shall be centered properly over the pipe ends with the lips against the pipes. The housing sections then shall be placed. After the bolts have been inserted, the nuts shall be tightened until the housing sections are firmly in contact, metal-to-metal, without excessive bolt tension.

G. Prior to the installation of sleeve-type couplings, the pipe ends shall be cleaned thoroughly for a distance of 8-inch. Soapy water may be used as a gasket lubricant. A follower and gasket, in that order, shall be slipped over each pipe to a distance of 6-inches from the end.

H. Valve boxes with concrete bases shall be installed as shown on the Contract Drawings. Mechanical joints shall be made in the standard manner. Valve stems shall be vertical in all cases. Place cast iron box over each stem with base bearing on compacted fill and the top flush with final grade. Boxes shall have sufficient bracing to maintain alignment during backfilling. Knobs on cover shall be parallel to pipe. Remove any sand or undesirable fill from valve box.

17.23 HYDRANT INSTALLATION

A. Hydrants shall be set at the locations designated by the City and/or as shown on the Contract Drawings and shall be bedded on a firm foundation. A drainage pit on crushed stone as shown on the Contract Drawings shall be filled with gravel or crushed stone and satisfactorily compacted. During backfilling, additional gravel or crushed stone shall be brought up around and 6-inch over the drain port. Each hydrant shall be set in true vertical alignment and shall be properly braced. Concrete thrust blocks shall be placed between the back of the hydrant inlet and undisturbed soil at the end of the trench. Minimum bearing area shall be as shown on the Contract Drawings. Felt paper shall be placed around the hydrant elbow prior to placing concrete. CARE MUST BE TAKEN TO ENSURE THAT CONCRETE DOES NOT PLUG THE DRAIN PORTS. Concrete used for backing shall be as specified herein.

B. When installations are made under pressure, the flow of water through the existing main shall be maintained at all times. The diameter of the tap shall be a minimum of 2-inch less than the inside diameter of the branch line.

C. The entire operation shall be conducted by workmen thoroughly experienced in the installation of tapping sleeves and valves, and under the supervision of qualified personnel furnished by the manufacturer. The tapping machine shall be furnished by the Contractor if tap is larger than 12-inch in diameter.

D. The Contractor shall determine the locations of the existing main to be tapped to confirm the fact that the proposed position for the tapping sleeve will be satisfactory and no interference will be encountered such as the occurrence of existing utilities or of a joint or fitting at the location proposed for the connection. No tap will be made closer than 30-inch from a pipe joint.

E. Tapping valves shall be set in vertical position and be supplied with a 2-inch square operating nut for valves 2-inch and larger. The valve shall be provided with an oversized seat to permit the use of full sized cutters.

F. Tapping sleeves and valves with boxes shall be set vertically or horizontally as indicated on the Contract Drawings and shall be squarely centered on the main to be tapped. Adequate support shall be provided under the sleeve and valve during the tapping operation. Sleeves shall be no closer than 30-inch from water main joints. Thrust blocks shall be provided behind all tapping sleeves. Proper tamping of supporting earth around and under the valve and sleeve is mandatory. After completing the tap, the valve shall be flushed to ensure that the valve seat is clean.

17.24 SHOP PAINTING

Ferrous surfaces of valves and appurtenances shall receive a coating of rust-inhibitive primer. All pipe connection openings shall be capped to prevent the entry of foreign matter prior to installation.

17.25 FIELD PAINTING

All metal valves and appurtenances specified herein and exposed to view shall be painted according to the Specifications. All above ground potable water main valves shall be painted safety blue.

17.26 INSPECTION AND TESTING

Completed pipe shall be subjected to hydrostatic pressure test for two hours at 180 psi. All leaks shall be repaired and lines retested as approved by the City. Prior to testing, the pipelines shall be supported in an approved manner to prevent movement during tests.

END OF SECTION

THIS PAGE INTENTIONALLY LEFT BLANK

SECTION 18 - SANITARY SEWER CONSTRUCTION

18.01 GENERAL

The Work in this section includes construction of sanitary sewer gravity pipes, force mains, manholes, and appurtenances.

Sanitary Sewers are to be constructed at locations indicated on the Contract Drawings. The City reserves the right, however, to make minor changes in grade and/or alignment as the Work progresses.

All Work shall be fully completed within the established limits as outlined for the various Pay Items listed in the Proposal. It is not the intent of the City to allow additional compensation for obstructions, interferences, or similar contingencies on this Project.

Pipe materials used for gravity sewers shall be subject to the depth limitations indicated in accordance with the Contract Documents.

All force main pipe and fittings shall be furnished and installed in accordance with the applicable requirements of the Technical Specifications sections headed “Piping Materials: Ductile Iron Pipe,” “Piping Materials: PVC Pressure Pipe,” and "Pressure Pipe Construction."

At the ends of the sections where adjoining pipelines have not been completed and are not ready to connect, temporary bulkheads or plugs (as specified herein) approved by the Engineer shall be installed. All such bulkheads or plugs shall be removed when they are no longer needed or when ordered by the Engineer.

All pipelines shall be tested and closed-circuit television video (CCTV) inspected. Any leak or defect shall be repaired and re-televised. Tests shall be conducted in accordance with these Specifications.

PVC pipe for gravity sewers shall be tested for allowable deflection. Tests shall be conducted in accordance with the requirements of these Specifications.

Connections between dissimilar gravity pipe materials or diameters shall be made as specified herein.

Connections between pressure pipes shall be made with solid sleeves as specified herein.

The ends of all new sanitary laterals shall be marked by witness posts or protruding galvanized pipe, as directed by the Engineer. Witness posts shall be 4-inch diameter PVC pipe filled with concrete; 4 to 5 feet of the pipe shall be exposed and wrapped with green tape. The 1-inch diameter galvanized pipe shall protrude 1 inch above grade.

The following Standards are referenced in this section:

ASTM C 12	“Practice for Installing Vitrified Clay Pipe Lines”
ASTM C 76	"Standard Specification for Reinforced Concrete Culvert, Storm Drain, and

	Sewer Pipe"
ASTM C 443	"Standard Specification for Joints for Circular Concrete Sewer and Culvert Pipe, Using Rubber Gaskets"
ASTM C 478	"Standard Specification for Precast Reinforced Concrete Manhole Sections"
ASTM C 1107	"Standard Specification for Packaged Dry, Hydraulic-Cement Grout (NonShrink)"
ASTM D 2321	"Standard Practice for Underground Installation of Thermoplastic Pipe for Sewers and Other Gravity-Flow Applications"
ASTM D 3034	"Standard Specification for Type PSM Poly (Vinyl Chloride) (PVC) Sewer Pipe and Fittings"
ASTM D 3753	"Standard Specification for Glass-Fiber-Reinforced Polyester Manholes"
ASTM F 477	"Standard Specification for Elastomeric Seals (Gaskets) for Joining Plastic Pipe"
ASTM F 679	"Standard Specification for Poly (Vinyl Chloride) (PVC) Large-Diameter Plastic Gravity Sewer Pipe and Fittings"
UNI-B-6-98	"Recommended Practice for Low-Pressure Air Testing of Installed Sewer Pipe" Uni-Bell Plastic Pipe Association, Dallas, Texas

18.02 DATA TO BE SUBMITTED

The Contractor shall submit shop drawings in accordance with the General Conditions, Article 36, for the following materials:

Piping materials
Fittings and couplings
Grouting rings
Pipe-to-manhole connectors
Precast manholes
Fiberglass manholes
Castings
Wall sleeves
Special construction methods
Interior cementitious coating (including applicator's certification from manufacturer)

18.03 MATERIALS

All materials shall be furnished by the Contractor, unless otherwise noted on the Contract Drawings. All materials shall be new and of the best quality available. Materials not specifically specified shall confirm to applicable provisions of the FDOT-SSRBC.

18.03.01 Piping Materials

Sanitary sewer pipe shall either be green in color or shall be white with continuous colored green ink lettering or shall be continuously painted green along the top 1/3 of the pipe with 2-part high-build epoxy-polyamide paint. All sanitary sewers shall be installed accompanied by green-colored metallic identification tape laid 1 foot above the pipe, cut every 10 feet.

A. Ductile iron pipe and fittings for force mains or gravity sewers shall conform to the Technical Specifications section headed "Piping Materials: Ductile Iron Pipe."

B. PVC gravity sewer pipe and fittings 4-inch through 15-inch, intended for non-pressure service, shall comply with ASTM D 3034, Type PSM, with a dimension ratio of 35 and a minimum stiffness of 46 psi; or, at the direction of the Engineer, pipe with a dimension ratio of 26 and a minimum pipe stiffness of 115 psi shall be used. Joints and gaskets shall comply with ASTM F 477. PVC fittings for use on 4-inch through 15-inch PVC pipe shall be Harco Gasketed PVC Sewer Fittings as manufactured by Harrington Corp. or approved equal.

PVC gravity sewer pipe and fittings 18-inch through 27-inch, intended for non-pressure service, shall comply with ASTM F 679, with T-1 wall thickness and a minimum pipe stiffness of 46 psi. Joints and gaskets shall comply with ASTM F 477.

C. PVC pressure pipe and fittings for force mains or gravity sewers shall conform to the Technical Specifications section headed "Piping Materials: PVC Pressure Pipe." Fittings shall be PVC or ductile iron as specified, as directed by the Engineer.

D. High Density Polyethylene (HDPE) pressure pipe for force mains shall conform to the Technical Specifications section headed “Piping Materials: HDPE Pressure Pipe.”

18.03.02 Other Materials

A. Castings for manholes and cleanouts shall be cast iron of the sizes, shapes, and catalog references shown on the Contract Drawings. Where no reference is made on the Contract Drawings, castings shall be equivalent in quality to those manufactured by U.S. Foundry. Unless otherwise noted, all castings shall be designed for an HS-20 truck loading. Castings shall be marked "Sanitary Sewer."

B. Concrete, reinforcing, and masonry for precast, cast-in-place, or site assembled manholes and structures shall conform to the Technical Specifications section headed "Concrete, Masonry, and Reinforcing Steel."

C. Precast manholes shall be manufactured as specified herein and in accordance with the sizes and details shown on the Contract Drawings, and with the approved shop drawings.

D. Fiberglass Reinforced Polyester (FRP) manholes shall be manufactured in accordance with ASTM D 3753, the sizes and details shown on the Contract Drawings, and the approved shop drawings.

18.04 CONNECTIONS TO EXISTING SANITARY SEWERS

The Contractor shall connect new sanitary sewers to existing sanitary sewers as shown on the Contract Drawings and as specified.

All connections to existing sanitary sewers shall be by Flex-Seal Adjustable Repair Coupling Series MR-ARC with Series 316 stainless steel shear rings as manufactured by Mission Rubber Company

or approved equal. All couplings shall be centered between pipe ends and shall be tightened at both ends by Series 316 stainless steel clamps or approved equal.

The Engineer shall be notified at least 2 working days prior to making final connections. The time at which the connections are to be made shall be subject to acceptance by the Engineer.

18.05 CONSTRUCTION OPERATIONS

Pipes shall be laid in open cut, except when another method, such as jacking, augering, directional drilling, or tunneling, is shown on the Contract Drawings, specified, or ordered. Construction shall adhere to the following:

A. No excavations shall be left open over a weekend. All pavement openings shall be completely repaired within 7 days of opening.

B. Sanitary sewers may be constructed in short tunnels to protect trees, shrubs, and existing surface or subsurface utilities and structures. Short tunnels shall be constructed to the lengths shown on the Contract Drawings, specified, or directed by the Engineer. No separate payment will be made for short tunnels.

C. Temporary fences, where required, shall be "wood and wire fence" or other suitable fencing as approved by the Engineer.

D. During the Work, it will be necessary to install the sanitary sewer under or closely adjacent to existing culverts and other storm and water main facilities. Where so indicated on the Contract Drawings, the Contractor shall remove storm drains to permit construction of the sanitary sewer and shall then reconstruct the storm drain. Where removal and reconstruction are not indicated on the Contract Drawings, the Contractor shall protect all existing storm and water main facilities which are shown on the Contract Drawings or located in the field during the Work.

E. Sewers crossing water mains may be required to be constructed of ductile iron pipe, PVC pressure pipe, or heavy wall PVC pipe (SDR 26) as ordered by the Engineer, to conform to DEP and Pinellas County Public Health Unit requirements.

   Sanitary sewers and service laterals which cross under the new water pipe with less than 18 inches clear vertical separation, or which cross over the new water pipe, shall be replaced with ductile iron pipe or PVC pressure pipe, or heavy wall PVC pipe (SDR 26) for 10 feet on both sides of the new water main, or as directed by the Engineer.

F. All ground surfaces disturbed by the Contractor shall be restored to their original condition in conformance to the Technical Specifications section headed "Surface Restoration."

G. Sanitary sewers shall not be cut or pumped around without an approved sanitary sewer pump-around plan and submittal of same, a minimum of 72 hours prior to implementation, to the Water Resources Department Dispatch, 893-7261. The pump-around plan shall include size of pipes and pumps, and discharge location.

H. It is the responsibility of the Contractor to maintain operation of the existing sewerage facilities during construction and repair work. The Contractor shall be responsible for providing any equipment required to maintain operation of service during construction. Any damage done to any existing sewer pipe or structure is to be immediately repaired to a condition equal to, or better than, its original condition.

I. Cutting ductile iron pipe shall be field cut with a power saw. No impact cutting is permitted. The spigot end of pipe thus cut shall be filed or ground to form a bevel.

J. Cutting PVC sewer pipe may be field cut using hand or power saws in accordance with the manufacturer's recommendations. The raw spigot end thus formed shall be filed to remove gasket damaging burrs and to form a standard bevel.

18.06 MANHOLE CONSTRUCTION

18.06.01 Precast Concrete Manholes

Precast manholes shall be constructed in accordance with the details shown on the Plans. Full shop drawing information including design, materials, fabrication details, and installation methods of the proposed precast manholes shall be submitted to the Engineer as specified.

A. Base slabs for precast manholes 48-inch in diameter shall have a minimum thickness of 8 inches as detailed on the Plans. The diameter of the base slab shall be as detailed on the Plans. Reinforcement shall be placed with 2 inches of concrete cover over the top row of steel. Base slabs for precast manholes shall be cast with the lower manhole section and placed on a level, compacted trench bottom.

B. Riser sections, grade rings, and tops shall comply with ASTM C 478 with the exception that Article No. 11 shall be deleted. Base riser sections shall be provided with preformed pipe holes to fit the connectors. The tops of pipe holes shall not be within 4 inches of the bell or socket portion of the riser.

C. Riser joints shall conform to ASTM C 443, to the manufacturer's recommendations and as shown on the Plans. Riser shall be jointed with rubber, plastic, or preformed bituminous joint sealing compound equal to Ram-Nek as manufactured by K.T. Snyder.

D. Manhole sizes up to 10 feet in depth (invert to bottom of brick adjustment ring) shall be a minimum of 48-inch inside diameter for 18-inch diameter and smaller pipe. Manholes over 10 feet in depth shall be the specified diameter for a minimum of 6 feet above the manhole invert; the remaining portion may, at the Contractor's option, be reduced to 48-inch diameter. In no case shall the manhole diameter be less than that required to adequately enclose the sewer pipe.

E. Tops shall have a minimum opening 24 inches in diameter for pipes 18-inch and smaller and 32-inch minimum for pipes 21-inch and larger, with an 8-inch wide flange at the top. For Type I manholes, only concentric cones are acceptable.

F. Top grades of precast manholes shall be established so that a minimum of 3, but no more than 6, courses of brick are placed under the ring and cover casting.

G. Inverts shall be formed using poured-in-place concrete conforming to the Technical Specifications section headed "Concrete, Masonry and Reinforcing Steel" and shall have a minimum strength of 2500 psi.

H. Drop inlets shall be provided where directed by the Engineer or shown on the Plans, and such drop inlets shall conform to details shown on the Plans.

I. A protective coal tar epoxy coating of Carboline (formerly Kop-Coat) Bitumastic 300-M, or approved equal, shall be applied to the exterior surfaces of manholes. One coat shall be applied to the outside and shall yield a final dry film thickness of 9 mils.

J. A dense and durable concrete lining of 100 percent pure fused calcium-aluminate cementitious lining of SewperCoat PG as manufactured by Kerneos Inc., shall be applied in accordance with manufacturer's recommendations, to all interior surfaces of manholes including walls, benches, flow channels, and inverts. Lining shall have a final minimum thickness of 1/2 inch.

K. Manhole wall penetrations for precast manholes shall be as specified for brick manholes.

L. Pipe-to-manhole connections (for New Precast) shall be made with a flexible watertight connector such as Kwik Seal or PSX: Positive Seal as manufactured by Press-Seal Gasket Corporation, or Kor-N-Seal connectors for pipe sizes up to 15-inch and Kor-N-Seal II connectors for pipe sizes 15-inch through 30-inch as manufactured by NPC Inc. Pipe-to-manhole connection shall be installed by the precaster for new manholes, unless specified otherwise.

18.06.02 Fiberglass Reinforced Polyester (FRP) Manholes

The construction of FRP manholes shall conform to the details on the Plans. Full shop drawing information including design, materials, fabrication details, and installation methods of the proposed fiberglass manholes shall be submitted to the Engineer as specified.

A. FRP manholes shall be a one-piece unit consisting of a watertight base and corbel section with a concentric cone, as manufactured by LF Manufacturing, Containment Solutions, or an approved equal.

B. A minimum wall thickness of 0.318 inch shall be used for 48-inch diameter manholes. A minimum wall thickness of 0.50 inch shall be used for manholes larger than 48-inch diameter. All manholes shall have a U/V inhibitor that is homogeneous with the resin mixture.

C. All FRP manholes shall have a minimum 20-year manufacturer’s warranty against corrosion and structural defects. All FRP manholes shall have a minimum AASHTO HS-20 axle loading.

D. Base Slabs: FRP manhole base slabs shall be precast or cast-in-place concrete and shall conform to the thickness specified in the details on the Plans. Cast-in-place concrete base slab reinforcement shall be placed with 3 inches of concrete cover in accordance with Technical Specifications Section 5 headed "Concrete, Masonry, and Reinforcing Steel" Cast-in-place base slabs for FRP manholes shall be cast in place on a level, compacted bottom.

E. Watertight Bottom: The FRP manhole shall have a resin 'fiber-reinforced bottom and a 2 and 1/2-inch-wide anti-floatation flange as a homogeneous part of the bottom section. The manhole bottom shall be a minimum 1/2-inch thick.

F. For FRP manhole depths greater than 10 feet, the manufacturer shall install a minimum of two 1 and 1/2-inch-deep by 3 and 1/2-inch-wide stiffening ribs. Stiffening ribs shall be completely enclosed with resin fiber-reinforcement.

G. FRP manholes shall be anchored to the cast-in-place concrete base slab with 316 stainless steel Kwik Bolt II Wedge anchors and washers as manufactured by Hilti, or approved equal. The size, number of anchors, and embedment depth shall be as shown on the Plans. The anchors shall be installed a minimum of 1 and 1/2 inches from the outer edge of the anchoring flange and shall be equally spaced around the circumference of the manhole bottom.

H. No fiberglass manhole shall have less than 4 feet clear inside height (measured from invert of bench to finished grade.)

I. Inverts shall be as shown on the Plans. A concrete invert may be formed in the field using poured-in-place concrete conforming to Technical Specifications Section 5 headed "Concrete, Masonry, and Reinforcing Steel" and shall have a minimum strength of 2,500 psi.

J. FRP stub outs shall be installed as shown on the Plans or directed by the Engineer, in accordance with approved shop drawings.

K. Pipe-to-manhole connectors for new manholes shall be installed by the FRP manhole manufacturer, unless specified otherwise. Connections for 4-inch through 15-inch pipe shall be made with a Kor-N-Seal boot as manufactured by NPC Inc., or approved equal, and laminated sleeve, as shown in the details on the Plans. Connections of 18-inch and larger shall be with a Link-Seal connector as manufactured by Pipeline Seal & Insulator Inc., or approved equal, and laminated sleeve as shown on the details on the Plans.

L. Laminated sleeves shall be formed using resin and fiberglass of same type and grade as used in the fabrication of the fiberglass manhole. Laminated sleeves may be factory installed or field installed. Field installation shall be by a manufacturer's certified representative or a Contractor-certified person.

M. All holes cut into the FRP manhole shall be by core methods recommended by the manhole manufacturer. A minimum of 12-inch clear wall between cutouts shall be maintained in all directions for each cored hole.

18.07 LAYING AND JOINTING PIPELINES

18.07.01 General

Ductile iron pipelines, PVC pressure pipelines, and HDPE pressure pipelines for force mains shall be laid and jointed as specified in the Technical Specifications section headed "Pressure Pipe Construction." Retainer glands used for PVC force mains shall be UL listed or FM approved and shall have factory certification for pressures up to 188 psi.

PVC, concrete, and FRPMP gravity pipelines shall be laid in conformance to applicable requirements of ASTM C 12 for concrete pipe, ASTM D 2321 for PVC pipe, and ASTM D 3262 and D 4161 for FRPMP.

18.07.02 Line and Grade

Sewers shall be laid to exact line and grade using approved methods consistent with common practice and approved by the Engineer. All line and grade controls shall be furnished by the Contractor. The line and the grade of the sewer, as well as the location of manholes, and all other appurtenances, shall be as shown on the Plans or, as directed by the Engineer. The grade line as given on the Plans indicates the grade of the invert of the sewer pipe. The trench bottom shall form a solid base for the entire length of pipe and shall be capable of supporting the full weight of the pipe and backfill material. The pipe bells shall not bear against the solid bottom of the ditch. Sewers will be inspected with mirrors at intervals during construction and corrected, if necessary, before backfill.

18.07.03 Pipe

Before the pipe is jointed in the trench, the outside of the spigot end and the inside of the bell shall be thoroughly cleaned, wiped, and brushed out to ensure that no dirt or foreign material gets into the finished line. Each pipe shall be inspected for defects and cracks prior to being lowered into the trench. Any cracked or otherwise rejected pipe shall be immediately removed from the site. All pipeline work must be performed in the presence of the Engineer. When work is not in progress, water shall be kept out of the pipe, and the pipe shall be kept closed by means of a test plug. The spigot end shall be centered on grade into the bell end of the last downstream length of pipe, and properly seated. When seating pipe with a pry, lever, or other approved device, care shall be taken to protect the pipe end from damage. Ends damaged in any manner shall be cause for rejection of the pipe.

18.07.04 Service Connections

Service lateral connections shall conform to the Details and shall be installed as indicated or as directed by the Engineer. The Contractor shall locate and record the exact position of such service lateral connections and include actual data on the As-Built Drawings to be furnished to the City.

In new sewer construction, D.I.P. and PVC service connections shall be made by means of a wye or tee. All joints connected to the wye unit shall remain flexible. Service connections on existing mains shall be made using a sewer saddle approved in the Contract Documents and

Technical Specifications. All new sewer service connections shall have a continuous looped trace wire consisting of one (1) 14-gauge minimum solid copper or one (1) 12- gauge copper clad steel tracer wires taped to the top center of the pipe from the cleanout to the main line and back to the cleanout.

Service pipe for all properties shall be laid to the property line and plugged, as shown on the Standard Details. All ends of service lines shall be marked by a permanent stake and where sidewalks or curbs are located nearby, by a chiseled mark cut in the sidewalk or curb. Service pipe shall have a protective cover of not less forty-two (42) inches under all roads and thirty-six (36) inches at all property lines. Inspection of service pipe shall be made before backfill. Service pipe shall have a visibly good line and grade. Shallow service shall be laid by using a four-foot hand level with proper shim attached to one end.
In cases of extra depth where service pipe cannot be laid on a continuous grade to the property line, the Contractor shall then furnish all materials and construct risers as shown on the Plans. When pipe cannot be adequately supported on undisturbed earth, it shall be supported on a concrete cradle. No payment will be made for concrete required to correct conditions resulting from faulty construction methods or negligence.

Service reconnections require adapters for all joints that will not connect properly with ordinary factory joints. Approved pipe cutting methods shall be used to cut any pipe required for the connection. All cut pipe will be ground and smoothed to remove snags and sharp edges. No mortar or collars shall be used on reconnections unless specifically approved by the Engineer.

18.07.05 Watertight Plugs

Watertight plugs of an approved type shall be installed in the ends of all pipe at times when pipe laying is not in progress or as ordered to prevent any contaminated material or vermin from entering the pipe. Pipelines shall be thoroughly flushed out upon their completion and when directed by the Engineer.

18.07.06 Removal of Existing Pipe

Existing pipe no longer in service that is removed from the system shall be disposed of properly by the Contractor. Openings in manholes, sewer lines, or wye branches remaining in place shall be properly plugged and sealed so as to eliminate any possibility of infiltration at the point of separation. All pieces of broken pipe shall be removed from the trench before backfill operations commence. Backfill of the trench shall be as specified in Technical Specifications Section 6- “Excavation and Backfill”. Inspection of structures remaining in place shall be made before backfill.

18.08 TESTING OF SEWER PIPELINES

18.08.01 Pressure Pipelines

Pressure sanitary sewer pipelines shall be tested in accordance with the applicable requirements of Technical Specifications Section 12 headed "Pressure Pipe Construction." Pressure sanitary sewer pipelines shall not be disinfected.

18.08.02 Gravity Pipelines

Gravity pipelines shall be tested for infiltration, exfiltration, deflection, or low pressure air test, at the Engineer's direction. The Contractor shall provide a closed-circuit television video camera inspection, in the presence of the City (or engineer) for all sanitary sewer pipe repairs and all new sanitary sewer construction. The video tape, CD, or DVD shall include time and date, footage, and audio describing any pipe abnormality; also, a CCTV inspection log shall be provided with each completed inspection. Any sewer pipeline found to be unacceptable by the Engineer shall be corrected, repaired, or replaced as directed by the Engineer, at no additional cost to the City.

1. **Infiltration Test**: Upon completion of a section of sewer line, a test for infiltration shall be conducted as directed by the City Inspector. Dewatering of the line to be tested shall terminate at least 2 days prior to the infiltration test. The maximum infiltration allowed in a 24-hour period shall not exceed 200 gallons per inch of diameter per mile of sewer from any section between successive manholes. If the infiltration exceeds the allowable limits, the line shall be further checked and repaired by the Contractor until the infiltration requirements have been met. If any location indicates concentrated infiltration, such location shall be investigated and corrected regardless of the overall infiltration requirement.

   Groundwater level measuring pipes shall be installed at manholes. The groundwater level shall be measured prior to testing. If the groundwater level is at least 2 feet above the highest section of the work being tested, infiltration methods of measurement shall be used. If there is insufficient groundwater head to perform infiltration testing, exfiltration tests will be made.

2. **Exfiltration Test**: If, in the opinion of the City Inspector, the position of a sewer line is above the normal groundwater table, the Engineer may direct the Contractor to perform an exfiltration test. The maximum allowable exfiltration during a 24-hour period shall not exceed 200 gallons per inch of diameter per mile of sewer from any section between successive manholes. An allowance of an additional 10 percent of gallonage shall be permitted for each additional 2 feet of head over a basic 2-foot minimum internal head.

   The exfiltration test shall be performed by plugging the upstream and downstream manholes of the test section, filling the line with water, and maintaining a minimum of 2 feet head of water in the section of line being tested. The rate of exfiltration shall be calculated from the water level drop in the upstream manhole during the 24-hour test period.

3. **Low pressure air test**: At the direction of the City Inspector or Engineer, each pipeline reach may alternatively be tested with air pressure (minimum 3.5 psi, maximum 5 psi) in accordance with UNI-BELL UNI-B-6-98 “Recommended Practice for Low-Pressure Air Testing of Installed Sewer Pipe.” The system passes the test if the pressure drop due to leakage through the pipe or pipe joints is less than or equal to 0.5 psig over the time period described below.

Minimum time period for a 0.5 psig pressure drop

The time period for the test shall be calculated from UNI-B-6-98 as follows:

T = 28.33 DK,
T = Shortest time, in seconds allowed for the air pressure to drop 0.5 psig,
K = .000419 DL, but not less than 1.0,
D = Nominal pipe diameter in inches, and
L = Length of pipe being tested in feet.

4. **Deflection Test**: Prior to final acceptance of the Project, all PVC pipelines shall be deflection tested. The Contractor or a City-approved test lab shall perform the deflection testing at the expense of the Contractor. The deflection test shall be performed a minimum of 7 days after the base has been compacted and sealed.

   The PVC pipe/soil system has been designed so that the maximum installed deflection does not exceed 5 percent and 7.5 percent of the base inside diameter of the pipe as listed in the following table:

Nominal Size (inches)	Base Inside Diameter (inches)	5% Deflection After 7 Days Mandrel (inches)	7.5% Deflection after 30 Days Mandre (inches)
ASTM D 3034 SDR-35			
8	7.665	7.28	7.09
10	9.563	9.08	8.85
12	11.361	10.79	10.51
15	13.898	13.20	12.86
ASTM F 679 TYPE T-1			
18	16.976	16.13	15.70
21	20.004	19.01	18.50
24	22.480	21.36	20.79
27	25.327	24.06	23.43
ASTM D 3034 SDR-26			
8	7.488	7.11	6.93
10	9.342	8.87	8.64
12	11.102	10.55	10.27
15	13.575	12.90	12.56
ASTM F 679 TYPE T-2			
18	17.054	16.20	15.77
21	20.098	19.09	18.59
24	22.586	21.46	20.89
27	25.446	24.17	23.54

The Contractor shall have the option of testing for 5 percent deflection after the base has been compacted and sealed for 7 days; or for 7 and 1/2 percent deflection after the base has been compacted and sealed for 30 days.

If the pipe fails the 7-day, 5 percent deflection test, the Contractor shall immediately conduct a 7 and 1/2 percent deflection test. If the pipe passes the 7 and 1/2 percent deflection test, the Contractor has the option of repairing that section at that time or waiting until a minimum of 30 days after the base has been compacted and sealed and then re-testing for a maximum of 7 and 1/2 percent deflection.

If the pipe fails the 7 and 1/2 percent deflection test after 7 days or at 30 days, the Contractor shall repair that section immediately.

If the Contractor performs the deflection testing rather than employing a City-approved test lab, the following shall apply:

The Contractor shall furnish the mandrel, labor, materials, and equipment necessary to perform the tests as approved by the Engineer. The mandrel shall be pulled through by hand or a hand operated reel in the presence of the Engineer. Prior to performing the deflection tests, the Contractor shall submit to the Engineer certification that the 9-arm mandrels are preset as stated above. Each mandrel shall be engraved with the following:

- Serial Number
- Nominal Pipe Diameter
- Either “ASTM D 3034,” year and either “SDR-35” or SDR-26” or “ASTM F 679,” year and either “Type T-1” or Type T-2”
- Percent deflection as stated above

If the mandrel fails to pass any section of pipe, the Contractor shall excavate and make all repairs (section replacements) necessary to correct the excessive deflection. The Contractor shall then backfill, recompact, reseal the permanent pavement base, and retest the line. If the mandrel fails to pass a second time, the affected section shall be replaced. Re-rounding shall not be permitted.

18.09 SANITARY SEWER PIPE REPAIRS

The contractor shall furnish all labor and materials to repair sanitary sewer pipelines as specified herein

18.09.01 General

A. The Contractor shall excavate and expose suspected damaged pipeline at general locations described by the County. The pipeline shall be exposed for visual inspection four feet on each side of the damaged area or as directed by the County. The City may authorize replacing bad joint materials (vitrified clay or concrete pipe) or removing and replacing the pipe.

B. Crushed stone shall be used in pipe bedding and to help stabilize trench bottoms. Special attention shall be given to compacting the bedding underneath the pipeline and its haunches.

C. Backfilling of repaired pipe shall proceed only in the presence of the Inspector.

18.09.02 Vitrified Clay Pipe Repairs

A. Repairs to VCP including cracked or crushed pipe, cracked bells, offset joints, holes, etc. shall be accomplished by replacing a section of damaged pipe with a piece of new C-900 PVC pipe. Such replacement shall be performed in accordance with the clay pipe manufacturer's recommendations. PVC repair sleeves shall be supplied by Contractor.

18.09.03 Iron Pipe Repairs

A. Repairs to iron pipe shall be accomplished by one of two methods
   1. Application of an appropriate repair sleeve
   2. When the damaged area is larger than recommended for repair sleeves, the damaged section will be cut out and replaced with a section of new ductile iron pipe or PVC, as specified by the Engineer.

B. The connections of new and old pipe shall be accomplished with two new ductile iron solid sleeves. All iron pipe repair work shall be performed in accordance with the manufacturer's recommendations. All repairs, including sleeves, shall be wrapped in polyethylene encasement.

18.09.04 Reinforced Concrete Pipe Repair

A. Reinforced concrete pipe repair shall be accomplished by the use of a reinforced concrete collar. Reinforcing shall be circumferential with a minimum cross-section area as specified in ASTM Des: C76 for Class V, R.C.P. of the same diameter as the damaged pipe. For damaged areas less than two feet in diameter, the collar may be the sole element of repair. A cutout of corrugated metal pipe shall be placed over the damaged area only to aid in the formation of the collar. The collar shall extend three hundred sixty (360) degrees around the pipe and two feet past the damaged area and corrugated metal in the longitudinal axis.

B. For larger repairs, the collar shall be used as a closure. The damaged pipe length shall be removed and become the property of the Contractor. The replacement length may be jointed with the existing pipe on one end only. The existing portion of the joint shall be thoroughly cleaned, and the rubber gasket replaced. After fully seating the joint, the other end shall receive a concrete collar closure extending two feet past the joint in the longitudinal direction. If the new and existing joints are not identical, the closure shall be used at both ends.

18.09.05 Polyvinyl Chlorine Pipe Repair

A. For non-pressure applications, existing and new pipe shall be jointed with flexible couplings with stainless steel straps as approved in these Technical Specifications. Only the flexible

coupling recommended by the manufacturer for the particular pipes to be jointed shall be used

B. For pressure pipe applications, repairs shall be made by one of the two methods as specified for iron pipe, except replacement pipe shall be PVC pressure pipe.

18.09.06 Final Acceptance

A. In the case of pressure pipe applications, after the pipe repair is complete and still exposed, the pipeline will be placed in service. Visual inspection, by the Engineer, of the repair while the pipeline is pressurized will provide tentative acceptance of the repair, provided no leaks are present. Repair of leaks or unsatisfactory work shall be performed at no cost to the City. Final acceptance will be granted after proper backfilling and surface restoration is accomplished.

B. In the case of non-pressure service, the Contractor shall backfill and have the line inspected by a City Inspector. The line shall be inspected by one of two methods: (1) inspection by mirrors and sunlight and/or (2) television inspection as directed by the Engineer.
   1. Upon submission of inspection video records via USB the City will review and verbally respond within one working day. If the repair is not satisfactory to the Engineer, the Contractor will, at no cost to the City, re-excavate, make repairs, television inspect and backfill.
   2. When the repair is satisfactory to the Engineer, the Contractor will be directed to complete surface restoration. Upon satisfactory completion of surface restoration, final acceptance will be granted.

END OF SECTION

SECTION 20 – WASTEWATER SYSTEM CCTV INSPECTION AND CLEANING

20.01 SCOPE OF SERVICES AND WORK PHASING FOR SYSTEM CCTV INSPECTION AND PIPE CLEANING

A. The purpose of this bid is to obtain competitive unit prices for all labor, material, and equipment necessary to inspect via closed-circuit television (CCTV) and clean existing sanitary sewers ranging in size from 6 to 24-inch diameter. The work includes hydraulic root cutting and cleaning, grinding protruding break-in service connections, remote televising and recording of the sewer location and condition. All project locations will be within the City's service area.

B. All City assets will be identified using the established facility identification code (FID) for all inspection reports, geographical exhibits, data sets and asset management tasks. Assets may include, but not be limited to, manholes, clean outs, gravity mains, force mains, air release valves, and conflict structures. Asset FIDs will be provided to the Contractor prior to the start of inspection. Failure to utilize the FID could result in additional inspection at the Contractors expense.

C. Compliance with this contract shall be complete when all conditions set forth in these specifications have been met. The work to be completed on each section of sewer will be performed as applicable and in phases as defined in the following:

20.01.01 PHASE 1: PRE-CLEANING INSPECTION

A. The preferred method for Pre-Cleaning Inspection is color CCTV conforming to NASSCO Pipeline Assessment Certification Program (PACP), and for the data to be exported electronically in a PACP certified format. The data must be shown in an Asset Management and Viewing Software that is accessible to the City of St. Pete Beach. Since this inspection is performed prior to cleaning, it is understood that the video may not provide an "unobstructed view of the entire pipe".

B. The Contractor may propose other methods to the City prior to bid for inspection such as, zoom camera inspection, digital sidewall scanning inspections, acoustical technology, etc.

C. If the Contractor is performing the Pre-Cleaning Inspection, the method must be pre-approved by the City prior to inspection of the sewer interior.

D. It is not the intent of this specification to require bypass pumping to control heavy flow; however, the Contractor must, at a minimum, make reasonable effort to control the flow by using flushing equipment. See this specification for sequencing of cleaning and inspection during heavy flow

scenarios. The Contractor must also consider weather conditions to obtain the best video image of the sewer. This may require the Contractor to delay any video work after major rain events until the system can return to lower dry weather flow.

E. Based on the quality of the results, the City can reserve the right to reduce the scope of the Phase 1 Pre-Cleaning Inspection.

20.01.02 PHASE 2: CLEANING DETERMINATION

Based on the City and Engineer's review, he or she will determine if cleaning or any additional work will be required. At the sole discretion of the City it is to either declare the work on the particular sewer segment complete or notify the Contractor of additional work (i.e. Phase 3: Light Sewer Cleaning, Heavy Cleaning, Deposit Cut, Root Cut Medium, Root Cut Ball, or Lateral Cut)

20.01.03 PHASE 3: SEWER PIPE CLEANING

The Contractor shall perform the assigned additional work, which may include, but is not limited to the following items as defined in these specifications: Light Cleaning, Heavy Cleaning, Root Cut Medium, Root Cut Ball, Deposit Cut, or Lateral Cut.

20.01.04 PHASE 4: POST CLEANING INSPECTION

Final televising of the sewer segments determined by the City include evaluating the condition of the sewer segments after all cleaning has been performed in Phase 3.

A. The recorded video must show the entire circumference of the sewer. Any flow control to remove standing water and debris shall be incidental to the contract. The Contractor shall submit PACP data to include the electronic video reports, logs, etc. for the City's review.

B. The data must be shown in an Asset Management and Viewing Software that is accessible to the City of St. Pete Beach. The Contractor shall provide up to three software licenenses to the City and the Engineer which shall include, but not be limited to, viewing, editing, and exporting capabilities of all inspection data.

C. The segments of sewer to be cleaned and televised through this contract will be located primarily within the paved areas of the public right-of-way; however, there may be some sewer segments that are located within public easements on private property. The successful bidder, with assistance of the City as required, will be responsible to coordinate and gain access to any and all sewer segments and will be responsible for any restoration in accordance with technical specification Section 07 "Surface Restoration". This will include written authorization between

Contractor and landowner. It is the City's right to omit segments that are adequately covered in the Pre-cleaning Inspection video.

20.02 COMPLIANCE AND ACCEPTANCE

Compliance with this contract shall be complete when all conditions set forth in these specifications have been met. The following defines each work item, the level of effort, and quality of work that will be necessary to meet the intent of this specification:

20.02.01 PRE-CLEANING INSPECTION

A. The preferred method for Pre-Cleaning Inspection is color CCTV conforming to National Association of Sewer Service Companies' (NASSCO) Pipeline Assessment Certification Program (PACP), exported electronically in a PACP compliant format. Other methods for inspection, including CCTV, zoom camera inspection, digital sidewall scanning inspections, acoustical technologies, etc. must be preapproved by the City prior to inspection of the sewer interior.

B. Should the level or type of debris differ from the original inspection, the work type can be adjusted by the City to the proper work type and the work shall be paid at the adjusted, proper rate. The Contractor shall be responsible for providing evidence of the change in conditions to the City.

20.02.02 LIGHT SEWER CLEANING (EACH SEGMENT)

A. The Contractor shall clean the sewer and associated manholes, including drop connections and benches, with hydro-jetting equipment. This will require an unlimited amount of passes and a minimum of two passes of high-velocity hydro-jetting equipment to remove all loose debris and collect it for removal in the downstream manhole. The first pass shall be restricted to 800 psi at the nozzle head, and the second and subsequent passes shall be at 1200 psi. All debris must be removed from the sewer, including any debris that may have been washed up into any service connections (does not include known pre-existing conditions in service connections), drop connections or the bench wall of the manholes. This item does not include any root cutting, deposit removal, or grinding of protruding service connections.

20.02.03 HEAVY SEWER CLEANING (EACH SEGMENT)

A. Pipes that cannot be cleaned by the methods described in the Light Sewer Cleaning sub-section shall be cleaned with rotating nozzle equipment. This also includes Deposits Attached Grease (DAGS) if able to remove with rotating nozzle or other mechanical means; not to

include saws or cutters. Compliance with this section requires substantial effort towards cleaning.

B. Under this bid item, the Contractor shall remove all obstructions in the sewer. All debris must be removed from the sewer, including any debris that may have been washed up into any service connections (does not include known pre-existing conditions in service connections), drop connections or the bench wall of the manholes. This includes all grease, rocks, debris, sticks, etc. that will reduce the hydraulic capacity of the sewer and limit future maintenance access of remote equipment. This work will include an unlimited number of passes by high velocity rotating nozzleequipment in conjunction with specialty cleaning equipment. All pipes shall be restored to at least 95 percent of their nominal diameter. Joint sealant shall be removed to within ¼ inch of the pipe wall. Removal of excessive joint sealant will generally not be required until just prior to lining of the pipe segment (if necessary), unless the joint sealant prevents the passage of the CCTV equipment. The Contractor shall be responsible for any damage to the sewer or any service connections. This item does not include cutting/grinding protruding break-in connections, as that work will be paid under a separate bid item.

C. The Contractor shall maintain detailed documentation of cleaning efforts made to remove these items. Such documentation shall be made available to the City at any time.

D. The Contractor shall immediately notify the City if he believes that this level of cleaning will cause a sewer collapse due to the existing deterioration of the host pipe. The City's determination whether to continue or stop work is final.

20.02.04 ROOT CUT (EACH SEGMENT)

A. Root Cut Medium - Removal of Roots Medium (RM), and Root Balls (RB) in one or two joints.

B. Root Cut Ball – Removal of Root Balls (RB) removed in at least 3 joints.

C. The City shall determine if the sewer segment requires root cut cleaning. All roots must be screened, collected, and removed from the sewer for proper disposal.

D. The Contractor shall immediately notify the City if he believes that these activities performed under this paragraph will cause a sewer collapse due to the existing deterioration of the host pipe. City's determination whether to continue or stop work is final.

20.02.05 DEPOSIT CUT (EACH SEGMENT)

A. Removal of Deposits Attached Encrustation (DAE) and Deposits Attached Grease (DAGS) that require a cutter to remove.

B. Under this bid item, the Contractor shall remove all obstructions in the sewer. All debris must be removed from the sewer, including any debris that may have been washed up into any service connections (does not include known pre-existing conditions in service connections), drop connections or the bench wall of the manholes. This includes all deposits, grease, debris, sticks, etc. that will reduce the hydraulic capacity of the sewer and limit future maintenance access of remote equipment. This work will include an adequate number of passes using high velocity hydro-cleaning equipment required to produce a clean pipe in accordance with these specifications. A mechanical/hydraulic root, chain cutter, etc. may be used where necessary at no additional cost to the City; however, the Contractor shall be responsible for any damage to the sewer or any service connections. This item does not include cutting/grinding protruding break-in connections, as that work will be paid under a separate bid item

C. Compliance with this section requires substantial effort towards cleaning, chipping, cutting, grinding, etc. to remove hardened deposits, grease, etc. The Contractor shall use remote CCTV equipment to monitor the progress of the work and ensure that the sewer is not damaged.

D. The Contractor shall immediately notify the City if they believe that activities performed under this paragraph will cause damage due to the existing deterioration of the host pipe. The City's determination whether to continue or stop work is final.

E. The Contractor shall maintain detailed documentation of cleaning efforts made to remove these items.

F. If attached deposits cannot be removed by tools normally used in the industry, the City should be consulted immediately. The City and the Contractor should discuss whether to cancel the work on that segmentation or negotiate a flat rate or hourly rate for the Contractor to do the work.

20.02.06 LATERAL CUT (EACH SEGMENT)

A. Removal of protruding laterals shall comply with Specification 36 and the requirements outlined below.

B. Removing protruding laterals, excludes DIP, SP, CAS etc.

C. The City shall determine when break-in service connections will require grinding based on his review of the initial survey television inspection. The Contractor shall cut/grind the protruding service connection by using a remote grinding/cutting device capable of removing, concrete, vitrified clay, PVC and other types of pipe material. The device shall be specifically designed to cut/grind protruding service connections. The Contractor shall use remote CCTV equipment to monitor the progress of the work and ensure that the service connection is not damaged.

D. The protruding break-in service connection shall be cut/ground flush to the main sewer pipe without scouring or damaging the main sewer or service connection. All cuttings must be screened, collected, and removed from the sewer for proper disposal.

E. During the final survey television inspection, the Contractor shall slowly pan the entire circumference of the trimmed connection to verify the quality of the work.

F. The Contractor shall immediately notify the City if he believes that the pipe is not structurally sound. The Contractor and City shall discuss the severity and risk of cutting/grinding the lateral. The City shall then determine, if they want the lateral cut/ground, at the City's risk, or if the work should not be performed on this contract.

G. If other than typical lateral materials are encountered, the Contractor shall notify the City and the City and Contractor should discuss the ability, costs and risks associated with cutting/grinding the lateral. The City shall decide whether to cut/grind the lateral or to not cut/grind the lateral. If the City decides to cut/grind the lateral, the price should be negotiated between the City and Contractor, prior to cutting/grinding the lateral.

20.02.07 DEBRIS RECORDS

The Contractor shall keep records of types of debris, removed from each segment of pipe and provide these records to City in the format requested by City.

20.02.08 FINAL SURVEY TELEVISION INSPECTION

As in the initial survey television inspection pay item, CCTV inspections will be conducted entirely in digital format.

All CCTV work shall conform to the most current NASSCO PACP standards. The documentation of the work shall consist of NASSCO PACP CCTV Reports, Unmodified NASSCO PACP database, logs, electronic reports, etc. noting defects and observations encountered during the inspection.

All City assets will be identified using the established facility identification code (FID) for all

inspection reports, geographical exhibits, data sets and asset management tasks. Assets may include, but not be limited to, manholes, clean outs, gravity mains, force mains, air release valves, and conflict structures. Asset FIDs will be provided to the Contractor prior to the start of inspection. Failure to utilize the FID could result in additional inspection at the Contractors expense.

Acceptance of pipe segment cleaning shall be made upon the successful review of the CCTV inspection by the Engineer. If the CCTV inspection shows the cleaning to be unsatisfactory, the Contractor shall be required to repeat the cleaning and CCTV inspection of the pipe segment until the cleaning is shown to be satisfactory. Such repeat cleaning and CCTV inspection shall be made at the Contractor's expense.

20.03 CLEANING EQUIPMENT

A. The wastewater system shall be cleaned with industry standard truck-mounted high velocity hydro-cleaning equipment. No mechanical bucket machinery will be acceptable for the cleaning process. The equipment shall be provided with a minimum of 500 ft of one-inch 10 high-pressure hose with a selection of high velocity nozzles, as required for the cleaning and heavy cleaning operations. The equipment shall have a minimum usable water capacity of 1000 gal. The pumps shall be capable of delivering a minimum 60 gpm at 3000 psi. Pressure to the nozzle shall be regulated by a relief valve, adjustable from a to 1,500 psi minimum. The nozzles shall produce a scouring action from 15 to 45 degrees in all size pipes to be cleaned. The equipment shall carry its own 1,000 gal water tank capable of holding corrosive or caustic cleaning or sanitizing chemicals, engines and pumps, and a hydraulically-driven hose reel. The equipment shall also include a high velocity washing hose for ancillary cleaning of the walls and floor of manholes. The hose shall have an adjustable nozzle capable of producing flow from a fine spray to a solid stream. All controls shall be located so that the equipment can be operated above ground. During hydro-cleaning, the Contractor shall restrict the flow level in the pipe to a maximum of 50 percent of the pipe diameter. Particular care should be taken to avoid flooding house connections during hydro-cleaning operations.

B. The Contractor shall provide equipment capable of removing all sand, dirt, rocks and other debris from the pipe segment to allow unobstructed remote CCTV inspection of all internal pipe surfaces.

C. The Contractor shall certify that backup cleaning equipment, including machines, devices, tools, etc, is available and can be delivered to the site within 24 hours.

D. Any blockages of building service connections resulting from the cleaning or other items of work shall be removed by cleaning of the building connection by the Contractor, at his own expense. Any damage caused by flooding of building service connections shall be corrected by the Contractor, at his own expense.

E. The Contractor shall provide specialty equipment capable of mechanically removing all attached,

hardened and/or cemented debris including, but not limited to, roots, grease, calcification, tuberculation, joint sealant, other hardened or tightly adherent deposits, etc. which cannot be removed by the use of industry standard high velocity hydro-cleaning equipment alone. Specialty equipment shall include, but is not limited to, a root saw, spring blade root cutter chuck or approved equal.

20.04 REFERENCED DOCUMENTS

A. All work must also conform to the latest edition of the following specifications:

1. State Department of Transportation, Construction and Materials Specification.
2. Rules and Regulations and Standard Drawings.
3. Rules and Regulations of the Office of the County/City Engineer.
4. If there is a difference in these specifications, the Rules and Regulations shall govern, DOT Specification.
5. NASSCO PACP Standards.
6. Other standards as appropriate.

B. Notification

1. If observed defects are believed to be such that further cleaning operations may compromise the structural integrity and/or cause the pipe to become unusable, the Contractor must provide written communication to the City's designee of the observed condition(s) and reason to believe that continued cleaning operations may cause substantial damage. The City will then direct the Contractor as to what services, precautions, etc., the City will require of the Contractor. If the contract documents do not address this potential, then the City and Contractor will negotiate in good faith, the conditions under which the work is to continue or cease to continue.

2. This exception may only be used to prevent asset damage and shall not be used to eliminate difficult or adverse cleaning areas that were previously documented in these documents or by prior written communication with the City.

20.05 GENERAL EXECUTION

A. The Contractor shall furnish and maintain, in good condition, all cleaning and televising equipment necessary for proper execution of the work.

B. Maintaining Flow: It will be the responsibility of the Contractor, throughout the tenure of this contract, to provide and maintain sufficient flow at all times to pass any flash of storm flow of drainage ditches and prevent any backwater flooding due to obstruction caused by cleaning or CCTV equipment.

C. Retrieval of Materials and Equipment: It shall be the Contractor's responsibility to remove

materials and equipment that has been lodged in the sewer from cleaning, television inspection, or point repair excavations.

D. After determining the preliminary requirements and the feasibility of effective CCTV inspection, the Contractor shall thoroughly clean all required pipe segments as required to permit an unrestricted inspection by industry standard CCTV inspection equipment. Particular emphasis shall be afforded the removal of accumulated grease, roots, sand, rocks, bricks, sludge and other debris so that the CCTV inspection will clearly show all portions of the pipe being inspected. Acceptance of pipe segment cleaning shall be made upon the successful completion of the CCTV inspection and shall be defined as removing sufficient material to permit an unrestricted view of the pipe internal surfaces and to ensure an effective rehabilitation of the pipe segment, all to the satisfaction of the Engineer.

E. Except during drought conditions, water required for the cleaning will be provided by the City or County at locations to be specified by the City. The City or County shall furnish and install water meters at all points where water is drawn from the City's supply. The City or County will charge a fee for the water used. A backflow prevention device shall be used to prevent contamination of the potable water system. The Contractor is responsible for any damage resulting from improper operation of hydrants. Do not use or obstruct a fire hydrant when there is a fire in the area.

F. The Contractor shall not waste water from the public water supply because of improper connections or from hydrants left open.

G. The Contractor shall remove all bricks, rocks, debris, sludge, dirt, sand, grease, roots and other materials from the pipe segment ordered to be cleaned and collect and remove the resulting debris from the downstream manhole of the pipe segment. Passing waste material between manholes, causing accumulations of sand, system stoppages, or damage to the pumping equipment shall not be permitted. When necessary, a dam trap or weir and screen shall be temporarily installed in the downstream manhole in such manner that debris and solids shall be trapped and retained for subsequent removal.

H. Waste and debris cleaned from the pipe segment shall be removed at the downstream manhole by pumps or other means. The discharge and drainage stream shall be returned downstream to the wastewater collection system for disposal. Under no circumstances shall wastewater or solids be dumped onto the ground surface, street, or into ditches, catch basins or storm drains. All solid and semi-solid debris resulting from the cleaning operations shall be removed from the site and taken to the wastewater treatment facility to which the debris would have arrived in the absence of the cleaning operation, unless directed otherwise. The Contractor is responsible for transporting the debris and must remove and properly dispose of excess water from the debris prior to disposal at the City's wastewater treatment facilities.

I. Where access to manholes in easements and rights-of-way is required, the Contractor shall obtain permission from the homeowner for equipment access.

J. Barricades and warning signs shall be used in work areas and around open manholes. The Contractor shall furnish and maintain traffic controls and safety devices as required.

K. Employ satisfactory precautions to protect the pipe and manholes from damage that might be inflicted by improper selection of the cleaning process or improper use of the equipment. Immediately notify Engineer if fresh soil, pieces of pipe, or other visible signs of potential problems occur during cleaning operation. When using hydraulically propelled devices, take precautions to ensure that the water pressure created does not cause damage or flooding to public or private property. Do not surcharge the wastewater beyond the elevation that could cause overflow of wastewater into area waterways or buildings, or onto the ground.

L. The Contractor shall clean upstream reaches of the system before the downstream reaches are cleaned. Hydro-cleaning equipment shall be inserted in the downstream manhole of the pipe segment, and the cleaning work shall proceed from upstream to downstream. Winching equipment used shall not damage the pipe or manholes.

20.06 SUBMITTALS

A. All submittals shall comply with Specification Section 03 - Submittals and are due as scheduled. Work will not proceed until all submittals are received and approved. The project manager reserves the right to adjust the due dates of the submittals based on Contractor performance. The Contractor shall label each submittal indicating what is represented, name of Contractor, and project number. All submittals identified as being in error shall be re-performed and corrected at the Contractor's expense.

B. Submittals Required with Bid Documents include:

1. List of references per specifications
2. Documentation of Certification of PACP Software
3. Asset Management and Viewing Software

C. Submittals required seven (7) days prior to the Pre- construction Meeting for CCTV Inspection or Pipe Cleaning

1. Name of the project supervisor and resumes.
2. Documentation of NASSCO PACP certification for all CCTV operators, database and software.
3. Site Safety Plan. A complete generic site safety plan must be submitted one week prior to the pre-construction meeting. Work will not begin until an approved site safety plan is in place.
4. Sample inspection CCTV data and video or data from other approved inspection method.
5. Acknowledgment of required nomenclature utilizing the provided FID

D. Submittals Required for the Pre-construction Meeting

1. An initial comprehensive schedule of work to be approved by the City.
2. Management Organization: Provide an organization chart depicting the essential organizational elements and senior personnel of the proposed Contractor and the functions and interrelationships of the personnel proposed to provide technical support, project management and supervision for this project. Provide succinct resumes of the personnel proposed to provide technical support and project management for this project. The personnel designated in the management summary for essential positions shall not be changed except with the permission of City. The City will only approve such a change when, in its opinion, the substitute personnel have equal or greater qualifications and experience to those intended to be replaced.
3. Proof that Contractor is an approved/bonded Contractor with the City.

E. Submittals Required One Week Prior to Any Cleaning & Televising Work

1. Site specific site safety plan addenda.
2. Entry releases, if applicable

F. Weekly Submittals

1. Detailed updates to the work schedule will be provided to the project manager no later than 1:00 p.m. on the Friday preceding the next week's cleaning and televising work.
2. USB External Storage Drive with CCTV videos, logs, and / or electronic worksheets submitted 7 days prior to work). All field paperwork must be submitted before the Contractor’s invoice will be processed for payment.
3. Corrections to punch list items as required by the project manager to fulfill the requirements of this specification.

G. Final Submittals Prior to Payment

1. Corrections to punch list items as required by the City to fulfill the requirements of this specification.

20.07 OWNER RIGHTS

A. The City reserves the right to stop the work when, in the project manager's judgment, the Contractor's work or activities are threatening the health and safety of the public or endangering the environment or endangering the waters of the state. Work shall not proceed until a satisfactory resolution has been achieved, as determined in the sole and unfettered opinion of the City.

B. The Contractor or Subcontractor shall not perform any work which is not specifically identified in the work schedule unless approved by the City. Notification of such work must be received no later than 8:00 a.m. on the day the work is to be performed. A list of persons available to be notified will be given at the pre-construction meeting.

20.08 EMERGENCY RESPONSE

The Contractor shall provide a telephone number and pager number to the City. These numbers are intended for the project manager's use in contacting the evening/weekend/holiday emergency work crew for emergencies resulting from the Contractor's actions or lack thereof during this project. This crew shall be responsible for contacting the City within one-half hour after the first verbal or electronic notification. If the Contractor's crew has not responded to the site of the emergency within one hour of the first summons, verbal or electronic, the City will make all necessary repairs and bill the Contractor for all work performed. Costs related to the emergency response will be incidental to the contract and not measured for payment.

20.09 SEQUENCE OF INSPECTION AND CLEANING

A. The Contractor shall coordinate with the City and any Jurisdictions required to isolate any pipe segments with significant flow that would prohibit cleaning and inspection. The cleaning and inspection of the pipe segment shall be done outside of peak hour flows. The steps to clean and inspect the pipe segment include:

1. The lift/pump stations contributing flow into the sewer line to be inspect and cleaned must be pumped down.
2. Once stations are pumped down, the stations shall be turned off and the sewer line must be plugged to allow work to commence.
3. The Contractor must monitor the levels within the stations at all times while work has started with City personnel present.
4. After inspection and cleaning within the pipe segment is completed, the plug shall be removed and the stations shall be restarted to be pumped down again.
5. Repeat steps 1-4 for each segment of sewer line to be cleaned or inspected.

B. The Contractor is responsible for the operation and maintenance of the bypass systems.

C. The Contractor shall perform all work associated with bypassing without causing damage to existing improvements to remain, and without causing a spill of sewage outside the sewer system. Any damage results from the Contractor's work shall be repaired or replaced to the satisfaction of the City, and at no cost to the City. All fines, and costs associated with the cleanup of spills, shall be the responsibility of the Contractor.

END OF SECTION

SECTION 21 – CURED-IN-PLACE-PIPE (CIPP)

21.01 GENERAL

It is the intent of this section of these Specifications to provide for the reconstruction of pipelines and conduits by the installation of a resin-impregnated flexible tube that is either inverted or pulled into the original pipeline/conduit and expanded to fit tightly against said pipeline by the use of water or air pressure. The resin system shall then be cured by elevating the temperature of the fluid (water/air) used for the inflation to a sufficient enough level for the initiators in the resin to affect a thermosetting reaction.

The Contractor shall furnish all materials, labor, equipment, and services necessary for liner installation including: traffic control, pump around pumping and/or diversion of wastewater flows, cleaning and closed circuit television video (CCTV) inspection of the pipe segment to be lined, service lateral reconnection, final CCTV inspection and testing of lined pipe system, surface restoration, and cleanup of the Work site.

The Contractor is advised that this Contract requires work in active wastewater collection systems and shall follow all federal, state and local requirements for safety in confined spaces. The Contractor shall conform to all guidelines by the Occupational Safety and Health Administration (OSHA) Federal Regulations; 29 CFR Ch. XVII, Section 1910.146 Confined Space Entry.

21.02 REFERENCE DOCUMENTS

This Specification references ASTM D5813 (Standard Specification for Cured-in-Place Thermosetting Resin Sewer Pipe) ASTM F1216 (Standard Practice for Rehabilitation of Existing Pipelines and Conduits by the Inversion and Curing of a Resin-Impregnated Tube), ASTM F1743 (Standard Practice for Rehabilitation of Existing Pipelines and Conduits by Pulled-In-Place Installation of Cured-In-Place Thermosetting Resin Pipe), and ASTM D3839 (Standard Practice for Underground Installation of “Fiberglass” (Glass-Fiber Reinforced Thermosetting Resin) Pipe).

21.03 QUALIFICATION REQUIREMENTS

The system proposed (materials, methods, workmanship) must be proven through previous successful installations to an extent and nature satisfactory to the City and the Engineer that is commensurate with the size of the project being proposed. Since CIPP is intended to have a 50-year design life, only products deemed to have this performance will be accepted. All products and installers must be pre-approved prior to the formal opening of proposals.

Products and Installers seeking approval must meet all of the following criteria to be deemed commercially acceptable:

For a Product to be considered Commercially Proven, a minimum of 250,000 linear feet and/or 1000 line sections must have been successfully installed in North America. The Manufacturer (Li–censor) shall have completed sufficient enough testing to document that the materials and the method(s) of installation proposed will produce the desired long-term performance. All products used shall conform to the Contract Documents and these Technical Specifications. Chemical grout designed for injection shall be: AV -100 chemical grout as manufactured by Avanti International, or approved equal.

For an Installer to be considered Commercially Proven, the Installer must satisfy all insurance, financial, and bonding requirements of the City, and must have at least three years active experience in the commercial installation of the product bid. The Installer's key personnel shall have at least 100,000 linear feet and/or 300 line sections of successful experience (included in this experience shall be a sufficient quantity of installations in the sizes proposed for this project). The Installer shall be "ISO" certified or demonstrate that he/she has a similar quality assurance system in place. Additionally, the Contractor shall be certified and/or licensed by the liner manufacturer(s) as an approved installer for the products referenced in this specification

Documentation for products and installers seeking pre-approved status must be submitted no less than two weeks prior to the proposal due date to allow time for adequate consideration. The City will advise of acceptance (or rejection) a minimum of three days prior to the due date. All required submittals must be satisfactory to the City.

21.04 SUBMITTALS

The Contractor shall submit the following information:

1. Manufacturer's certification that the materials to be used meet the referenced standards and these specifications.

2. License or certificate verifying Manufacturer's/Licensor's approval of the installer.

3. Proposed equipment and procedures for accomplishing the work.

4. Lining Manufacturer's product data and instructions for resin and catalyst system.

5. Contractor's procedures for sealing CIPP liners from groundwater infiltration/migration at manholes. Details of all component materials and construction details such as hydrophilic rubber seals.

6. Manufacturer's or Assembler's guidelines for storage procedures and temperature control, handling and inserting the liner, curing requirements and details, service connection methods, and trimming and finishing.

7. Manufacturer's or Assembler's guidelines for minimum and maximum pressures, temperatures, and time durations to be used during liner inversion, cure, and cool down. 8. Procedures for cool down and relieving static head after the CIPP liner is cured

8. Manufacturer's or Assembler's guidelines for factory and/or field (whichever applies) wet out procedures including: volume of resin per unit of liner, roller gap setting, mixing ratios and procedures for resin and catalyst/hardener, shelf life of resin, pot life of resin, and required wet out procedure to ensure full saturation.

9. The Contractor shall also provide field measurements and liner sizing calculations which demonstrate the liner wall thickness design for each pipe segment and that the liner has been properly undersized to avoid the creation of wrinkles or folds. Tabular liner wall thickness calculations shall be provided for each pipe diameter in no less than 1-foot increments from 1 foot to 6 feet cover depth and in 2-foot cover depth increments thereafter. The tabulated liner wall thickness

for each pipe diameter/cover depth interval shall be the maximum wall thickness calculated over the cover depth interval. Special liner wall thickness calculations shall be submitted for installations with less than 3 feet of cover. The liner wall thickness shall be increased as required based on actual pipe ovality determined by the pre-installation CCTV inspection.

10. The Contractor shall submit pump around pumping and/or diversion plans to the Engineer a minimum of 14 days prior to the needed use for review and approval. In some cases verbal confirmation of the plan and approval with the Engineer or City Inspector may be used in lieu of a written plan. The Contractor shall notify the Engineer a minimum of 48 hours prior to commencement of the pump around operation. Failure to receive approval by the Engineer or City Inspector may result in the Contractor's Work being halted at no cost to the City.

11. The Contractor shall submit drawings that identify the liner insertion, pump around pumping locations and methods with sufficient detail to assure that the Work can be accomplished without spill or discharge of wastewater. The pump around pumping plan shall include an emergency response plan to be followed in the event of a failure of the pumping system.

21.05 MATERIALS

21.05.01 The Tube

The tube shall consist of one or more layers of a flexible needled felt or an equivalent nonwoven or woven material, or a combination of nonwoven and woven materials, capable of carrying resin and withstanding the installation pressures and curing temperatures. The tube should be compatible with the resin system to be used on this project. The material should be able to stretch to fit irregular pipe sections and negotiate bends.

The tube should be sewn or flame-bonded to a size that, when installed, will tightly fit the internal circumference and the length of the original conduit. Allowances should be made for the longitudinal and circumferential stretching that occurs during placement of the tube.

The tube shall be uniform in thickness and when subjected to the installation pressures will meet or exceed the designed finish wall thickness.

Any plastic film applied to the tube on what will become the interior wall of the finished CIPP shall be compatible with the resin system used, translucent enough that the resin is clearly visible, and shall be firmly bonded to the felt material.

The outside of the tube shall be marked for distance at regular intervals along its entire length, not to exceed 5 feet. Such markings shall also include the lining manufacturer’s name or identifying symbol.

Seams in the tube shall be stronger than the non-seamed felt.

The minimum tube length shall be that deemed necessary by the Contractor to effectively span the distance from the inlet to the outlet of the respective manholes or access points, unless otherwise specified. The Contractor shall verify the lengths in the field before impregnation of the tube with

resin. An individual tube insertion operation may be made over multiple contiguous pipe segments as determined in the field by the Contractor and reviewed by the Engineer.

21.05.02 The Resin System

The resin system shall be a corrosion resistant polyester, vinylester, or epoxy and catalyst system that when properly cured meets the minimum requirements given herein or those that are to be utilized in the design of the CIPP for this project. Resin shall not be subjected to ultraviolet light and shall form no excessive bubbling or wrinkling during lining.

21.06 STRUCTURAL REQUIREMENTS

The design thickness of the liner shall be arrived at using standard engineering methodology. ASTM F1216, Appendix X1, has such an acceptable methodology that may be used where applicable. The long-term flexural modulus to be used in the design shall be verified through testing. The long-term modulus shall not exceed 50% of the short-term value for the resin system unless the tube contains reinforcements. In the event that a reinforced tube is utilized, the long-term flexural modulus shall be the percentage of the short-term modulus as determined by the above referenced testing.

The layers of the finished CIPP shall be uniformly bonded. It shall not be possible to separate any two layers with a probe or point of a knife blade so that the layers separate cleanly or such that the knife blade moves freely between the layers. If separation of the layers occurs during testing of the field samples, new samples will be cut from the work. Any reoccurrence may be cause for rejection of the work.

The finished CIPP shall fit tightly to the host pipeline at all observable points and shall meet or exceed the minimum thickness established by the design process. The materials properties of the finished CIPP shall meet or exceed the following structural standards:

MINIMUM PHYSICAL PROPERTIES

Property	ASTM Test Method	Polyester System	Filled Polyester System	Vinyl Ester System
Flexural Strength	D790	4,500psi	4,500psi	5,000psi
Flexural Modulus (Initial)	D790	250,000psi	400,000psi	300,000psi
Flexural Modulus (50 Yr)	D790	125,000psi	200,000psi	150,000psi
Tensile Strength	D638	3,000psi	3,000psi	4,000psi

The required CIPP liner wall thickness shall be based, as a minimum, on the physical properties in Section 17.080 of this Specification, in accordance with the design equations in the Appendix of ASTM F1216, and the following design parameters:

Design Safety Factor	=	2
Retention Factor for Long-Term Flexural Modulus to be used in Design *(as determined by Long-Term tests described in Section 17.08B)*	=	1% - 50%

Ovality	=	5%
Groundwater Depth (above invert)	=	Assume at Existing Grade
Soil Depth (above crown)	=	Based on field measurements
Soil Modulus	=	700 psi
Soil Density	=	120 pcf
Live Load	=	AASHTO HS - 20
Design Condition	=	Fully Deteriorated
Enhancement Factor	=	7.0
Poisson's Ratio	=	0.3

The CIPP liner material shall conform to the minimum wall thicknesses, as listed below:

MINIMUM WALL THICKNESSES

CIPP	Thickness
4"-6"	3.0 mm
8"-12"	6.0 mm
15"	7.5 mm
18"-21"	9.0 mm
24"-27"	10.5 mm
30"-36"	12.0 mm
42"	13.5 mm
48"	15.0 mm

Any layers of the tube that are not saturated with resin prior to insertion into the host pipe shall not be included in the CIPP liner wall structural thickness computation.

21.07 INSTALLATION

The CIPP shall be installed in accordance with the practices given in ASTM F1216 (for direct inversion installations) or ASTM F1743 (for pulled-in-place installations). The quantity of resin used for the tube's impregnation shall be sufficient to fill the volume of air voids in the tube with additional allowances being made for polymerization shrinkage and the anticipated loss of any resin through cracks and irregularities in the original pipe wall. A vacuum impregnation process shall be used in conjunction with a roller system to achieve a uniform distribution of the resin throughout the tube. The impregnated liner tube shall be transported to and stored at the site in such a manner that it will not be damaged, exposed to direct sunlight, or result in any public safety hazard. The impregnated liner tube shall be kept cool during shipment and storage. All materials shall be subject to inspection and review prior to installation.

Contractor shall ensure that an Engineer approved procedure is followed for sealing the liner from all groundwater infiltration and migration at connections to and within all manholes. Hydrophilic sealing material shall be placed per the Manufacturer's recommended product guidelines and Contractor's/Manufacturer's approved procedures prior to liner installation. Temperature gauges shall be placed at the upstream and downstream ends of the reach being lined to monitor the pressurized fluid's (air or water) temperature. In addition to monitoring the temperature inside the tube, temperature gauges shall be placed between the host pipe and the liner at as many points as is practical to record the heating that takes place on the outside of the liner. The impregnated tube shall be inserted through an existing manhole or access structure by means of the manufacturer's recommended installation process in accordance with ASTM F1216. The application of hydrostatic head, compressed air, or other means shall fully extend the CIPP liner to the next designated manhole or termination point and inflate and firmly adhere the liner to the host pipe wall. The liner tube shall be installed at a rate less than 10 feet per minute at all times. If the CIPP liner installation fails, the Contractor shall be responsible for operating the bypass pumping equipment for the additional time required until the installation can be completed, at the Contractor's expense.

Curing of the resin system shall be as per the Manufacturer (Licensor) of the CIPP product. The temperatures achieved and the duration of holding the pressurized fluid at those temperatures shall be per the Manufacturer's (Licensor's) established procedures. If a heat source is required after placement is completed, suitable heat source and distribution equipment shall be provided. The equipment shall be capable of circulating hot water, air, and/or steam throughout the section by means of a pre-strung hose which has been perforated in accordance with the manufacturer's recommendations or other methods acceptable by the Engineer to raise the temperature uniformly above the temperature required to affect a resin cure. This temperature shall be determined by the manufacturer based on the resin/catalyst system employed. The heat source piping shall be fitted with continuous monitoring thermocouples to gauge the temperature of the incoming and outgoing water, steam, and/or air supply. Water, steam, or air temperature during the cure period shall meet the requirements of the resin manufacturer as measured at the heat source inflow and outflow return lines. The Contractor shall provide standby equipment to maintain the heat source supply. An additional continuous monitoring thermocouple shall be placed between the impregnated felt tube and the pipe invert at the remote manhole and at a point midway between the upstream and downstream manholes to determine the temperature during the cure. The temperature during the cure shall not be less than 130 degrees F at the boundary between the pipe wall and the liner unless otherwise required because of the resin system used. The initial cure shall be deemed to be completed when inspection of the exposed portions of the liner appears hard and sound and the remote temperature sensors indicate that an exotherm has occurred. The cure period shall be of duration and temperature recommended by the resin manufacturer during which time the recirculation of the water, steam, and/or air and cycling of the heat exchanger continuously maintain the required temperature. A data logger shall be used for Main Liners to continuously record temperature, pressure and time during heating, cure and cool down of the liner at the insertion, intermediate and termination manholes. Where requested, this data shall be provided to the Engineer for each pipe segment.

The cured liner shall be cooled to a temperature below 100 degrees F before relieving the static head or pressure in the lined pipe and returning normal flow back into the system. The cool down may be accomplished by introducing cool water or air into the lined pipe. Care shall be taken in the release of the static head or pressure so that a vacuum will not develop which could damage the newly installed liner. Water for cooling shall be supplied by the Contractor. The finished liner shall be continuous over the

length of the host pipe and be free from defects such as dry spots, delamination and lifts. All materials other than the cured liner should be removed from the pipe by the Contractor.

21.08 CIPP MAIN LINER TERMINATION AND CONNECTION IN MANHOLES

A. The liner shall achieve a watertight seal through the manhole channel/invert and at the host pipe(s) where it enters/exits any manhole. The use of fiber felt and a suitable resin system, hydrophilic rubber waterstops, injection grouting, or other Engineer approved methods compatible with the liner shall be used to ensure a watertight CIPP liner system. CIPP liner entries at manholes shall be smooth and free of irregularities. The top half of the CIPP liner shall be neatly cut at least 4-inches away from the wall.

B. The channel in the manhole shall be a smooth continuation of the pipe(s) and shall be merged with other pipes or channels. All manholes shall be individually inspected for liner cut off, benches and sealing Work. Any visible leaks through or around the CIPP liner shall be corrected by an approved method at the Contractor's expense. It is anticipated that some pipe to manhole connections will require supplementary efforts to affect an acceptable watertight seal.

C. The channel in the manhole shall be a smooth continuation of the liner and pipe(s) and shall be merged with other channels. Inverts and/or benches shall be resurfaced/repaired (or constructed where necessary as directed by the Engineer) to provide a smooth flow channel. The Engineer may also require that the manhole floor and base section receive an approved monolithic coating which is chemically compatible with the CIPP liner, and any chemical/cementitious grout or repair material used in the manhole.

21.09 SERVICE RECONNECTION

A. The Contractor shall be responsible for internally reopening the service connections to the lined pipe using a pivot-head CCTV inspection camera and a remote cutting tool. The Contractor shall locate the service connections from inside the lined pipe, cut a hole matching the connection diameter, and grout the area where the service connection enters the lined pipe to produce a watertight seal approved by the Engineer. Grouting of service connections shall be accomplished using a "Logiball" type lateral packer to seal the first 18 inches of the service connection in accordance with the manufacturer's instructions and the Technical Specifications. The Contractor shall provide a nearly full-diameter hole, free from burrs, loose or abraded material, hanging fibers or projections, and with a neat, smooth and crack-free edge. The hole shall be 95 percent minimum and 100 percent maximum of the original service connection diameter. The invert of the service connection shall match the bottom of the reinstated service opening. The Contractor shall certify he has a minimum of 2 complete working cutters plus spare key components on the site before each installation. All cuttings shall be collected and disposed of properly.

B. All service connections shall be reopened including those that go to unoccupied or abandoned buildings or vacant lots, unless directed otherwise by the Engineer. Begin reconnection of services within four hours after liner insertion. The Contractor shall initially reopen each connection in an expeditious manner with a less than a full size opening to release wastewater temporarily stored in the service lateral. The Contractor shall then complete reconnection of all services within 24 hours. The Contractor shall immediately reopen any missed connections and repair any holes drilled in

error. Faulty cuts shall be repaired by methods approved by the Engineer at no additional cost to the City.

C. It is the intent of these Specifications that service connections be reopened without excavation. No additional payment will be made for excavations for the purpose of reopening connections and the Contractor will be responsible for all costs and liability associated with such excavation and restoration work.

21.10 INSTALLATION RESPONSIBILITIES FOR INCIDENTAL ITEMS

It shall be the responsibility of the Owner to locate and designate all manhole access points open and accessible for the work, and to provide rights of access to these points. If a street must be closed to traffic because of the orientation of the pipeline, the Owner shall institute the actions necessary to do this for the mutually agreed time period. The Owner shall also provide free access to water hydrants for cleaning, installation of the tube, and other work items requiring water.

The Contractor, when required, shall remove all internal debris out of the pipeline that will interfere with the installation of the CIPP. The Owner shall provide a dumpsite for all debris removed during the cleaning operations. Unless stated otherwise, it is assumed that this site will be at or near the sewage treatment facility to which the debris would have arrived in absence of the cleaning operation. Any hazardous waste encountered during this project will be considered as a changed condition.

The Contractor, when required, shall provide for the flow of sewage around the section, or sections, of pipe designated for rehabilitation. The bypass shall be made by plugging the line at the existing upstream manhole and pumping the flow into a downstream man- hole or adjacent system. The pump and bypass lines shall be of adequate capacity and size to handle the anticipated flow. The City may require a detail of the bypass plan to be submitted.

Experienced personnel trained in locating breaks, obstacles, and service connections by close circuit television shall perform inspection of the pipelines. The interior of the pipe- line shall be carefully inspected to determine the location of any conditions that may pre- vent proper installation of the CIPP into the pipelines, and it shall be noted so that these conditions may be corrected. A videotape and suitable log shall be kept for later reference by the City.

It shall be the responsibility of the Contractor to clear the line of obstructions such as solids and roots that will prevent the insertion of CIPP. If pre-installation inspection reveals an obstruction such as a protruding service connection, dropped joint, or a collapse that will prevent the installation process, and it cannot be removed by conventional sewer cleaning equipment, then the Contractor shall make a point repair excavation to uncover and remove or repair the obstruction. Such excavation shall be approved in writing by the City's representative prior to the commencement of the work and shall be considered as a separate pay item.

The Contractor shall make every effort to maintain service usage throughout the duration of the project. In the event that a service will be temporarily out of service, the maximum amount of time of no service shall be 16 hours for any property served by the sewer. The Contractor shall be required to notify the City and all affected properties whose service laterals will be out of commission and to advise against water usage until the sewer main is back in service. Such notification shall be provided to the Utility Department at least one week prior to service disconnecting.

A public notification program shall be implemented, and shall as a minimum, require the Contractor to be responsible for contacting each home or business connected to the sanitary sewer and informing them of the work to be conducted, and when the sewer will be off-line. The Contractor shall also provide the following:

A. Written notice to be delivered to each home or business describing the work, schedule, how it affects them, and a local telephone number of the Contractor they can call to discuss the project or any problems that could arise.

B. Personal contact and attempted written notice the day prior to the beginning of work being conducted on the section relative to the residents affected.

C. Personal contact with any home or business that cannot be reconnected within the time stated in the written notice.

21.11 QUALITY ASSURANCE PROCEDURES

21.11.01 Material

A. All material testing shall be performed and certified by a registered independent, third-party laboratory.

B. Wall thickness of samples shall be determined as described in ASTM F1216, Section 8 or ASTM F1743, Section 8. The minimum wall thickness at any point shall not be less than 87.5% of the design thickness as calculated in Section 17.08 of this Specification.

C. The Contractor shall obtain, prepare and store appropriate samples for all liners installed under this Contract. The Contractor shall provide samples of the cured lining material from the actual installed liner at a minimum of one set per each liner insertion setup. The preparation and testing of these samples shall be in accordance ASTM F1216, Section 8. The Contractor shall coordinate the required testing of the samples with the laboratory, and the City will pay for the initial testing of these samples in accordance with the pay item. The Contractor shall pay for the cost of retests made necessary by the failure of the samples to meet the specified requirements.

D. The cured liner shall be sampled and tested for flexural strength and flexural modulus (short term). Flexural strength and modulus shall be tested in accordance with the requirements of ASTM 0790. The liner shall be in compliance with the physical properties stated in this Specification.

E. Corrosion resistance requirements shall be as stated in ASTM F1216, Section X2, Chemical Resistance Tests.

21.11.02 Field

A. Up to 10 percent of the installed CIPP Main Liners may be tested for exfiltration in accordance with ASTM F1216, Section 8.2 prior to service lateral reconnections. Testing shall exclude maximum pressure limitation (4.3 psi) at lowest end. Leakage testing shall be performed after

all dry and non-bondable hoses and tubes are completely removed from the liner. If the liner fails the test, Contractor shall repair or replace liner as required until the tested segment passes.

B. After completion of the installation of Main Liners, service reconnections, and finish work at the manholes, the lined pipe and adjacent manholes shall be televised by the Contractor at his expense, with a color CCTV inspection tilt-head camera recorded in digital format, as required by these Specifications. Pre-installation and post-rehabilitation inspections shall either be recorded on the same media or shall be referenced, if recorded on separate media. Acceptance of the Work shall be based on Engineer's review of the CCTV inspection. Post-rehabilitation CCTV inspection shall not be performed in conjunction with cleaning operations and the liner wall shall be as dry as practical during this inspection (no dripping or splashing). All CCTV inspections delivered to the City shall be in accordance with the Technical Specifications.

END OF SECTION

SECTION 23 – FIBERGLASS WET WELL OR MANHOLE LINER

23.01 GENERAL

Fiberglass reinforced polyester wet wells shall be manufactured from commercial grade polyester resin or vinyl ester resin, with fiberglass reinforcements. The resin system shall be suitable for atmospheres containing hydrogen sulfide and dilute sulfuric acid as well as other gases associated with the wastewater collection systems. The manhole liner or fiberglass wet well shall be a one-piece unit manufactured to meet or exceed all specifications of A.S.T.M. D-3753 latest edition as manufactured by L.F. Manufacturing, Inc., Giddings, Texas, or an approved equal. Section 37 “Wastewater Structure Rehabilitation” contains additional information about fiberglass liners and will govern over this section in the event of a conflict.

23.02 MATERIALS

A. RESIN:
The resins used shall be a commercial grade unsaturated polyester resin.

B. REINFORCING MATERIALS:
The reinforcing materials shall be commercial Grade “E” type glass in the form of mat, continuous roving, chopped roving, roving fabric, or a combination of the above, having a coupling agent that will provide a suitable bond between the glass reinforcement and the resin.

20.02.01 FIBERGLASS WET WELL MATERIALS

A. SURFACING MATERIALS
If reinforcing materials is used on the surface exposed to the contained substance, it shall be a commercial grade chemical-resistant glass that will provide a suitable bond with the resin and leave a resin rich surface.

B. FILLERS AND ADDITIVES
Fillers, when used, shall be inert to the environment and wet well construction. Additives, such as thixotropic agents, catalysts, promoters, etc., may be added as required by the specific manufacturing process to be used. The resulting reinforced plastic material must meet the requirement of this specification.

20.02.02 FRP MANHOLE LINER MATERIALS

A. INTERIOR SURFACING MATERIAL
The inner surface exposed to the chemical environment shall be a resin-rich layer of 0.010 to 0.020 inch thick. The inner surface layer exposed to the corrosive environment shall be followed with a minimum of two passes of chopped roving of minimum length 0.5 inch (13 mm) to maximum length of 2.0 inch (50.8 mm) and shall be applied uniformly to an equivalent weight of 3 oz/ft. Each pass of chopped roving shall be well rolled prior to the application of additional reinforcement. The combined thickness of the inner surface and interior layer shall not be less than 0.10 inch (2.5 mm).

B. WALL CONSTRUCTION PROCEDURE:
After inner layer has been applied the manhole liner wall shall be constructed with chop and continuous strand filament wound manufacturing process which insures continuous reinforcement and uniform strength and composition. The cone section, if produced separately, shall be affixed to the barrel section at the factory with resin-glass reinforced joint resulting in a one piece unit. Seams shall be fiberglassed on the inside and the outside using the same glass-resin jointing procedure. Field joints shall not be acceptable by anyone except the manufacturer.

C. EXTERIOR SURFACE:
For a UV inhibitor the resin on the exterior surface of the manhole liner shall have gray pigment added for a minimum thickness .125 inches

D. FILLERS AND ADDITIVES:
Fillers, when used, shall be inert to the environment and manhole construction. Sand shall not be accepted as an approved filler. Additives, such as thixotropic agents, catalysts, promoters, etc., may be added as required by the specific manufacturing process to be used to meet the requirements of this standard. The resulting reinforced-plastic material must meet the requirements of this specification.

23.03 WET WELL FABRICATION

A. EXTERIOR SURFACE:
The exterior surface shall be relatively smooth with no sharp projections. Handwork finish is acceptable if enough resin is present to eliminate fiber show. The exterior surface shall be free of blisters larger than ½ inch in diameter, delamination and fiber show.

B. INTERIOR SURFACE:

The interior surface shall be resin rich with no exposed fibers. The surface shall be free of grazing, delamination, blisters larger than ½ inch in diameter, and wrinkles of 1/8 inch or greater in depth. Surface pits shall be permitted up to 6 square feet if they are less than ¾ inch in diameter and less than 1/16 inch deep.

C. FIBERGLASS REINFORCED BOTTOM:

The bottom to be fabricated using fiberglass material as stated in Section 20.02. Material and installation to meet all physical requirements as per Section 20.05. Bottom to be attached to wet well pipe with fiberglass layup to comply with A.S.T.M.-D3299 specifications. When reinforcement is necessary for strength, the reinforcement shall be completely enclosed with a fiberglass layup per A.S.T.M.-D3299.

D. FIBERGLASS REINFORCED TOP:

The fiberglass wet well top shall be fabricated using fiberglass material as stated in Section 20.02. Material and installation to meet all physical requirements as per Section 20.05. Top to be attached to wet well pipe with fiberglass layup to comply with A.S.T.M.-D3299 specifications.

When reinforcement is necessary for strength, the reinforcement shall be completely enclosed with a fiberglass layup per A.S.T.M.-D3299.

E. INSTALLATION OF STUBOUTS:

Effluent, service, or discharge lines made be factory installed. Approved methods are PVC sewer pipe, Inserta-Tee fittings, or Kor-N-Seal boots. Installation of stubouts to be fiberglass layup to comply with A.S.T.M.-D3299 specifications.

F. DEFECTS NOT PERMITTED:

A. Exposed fibers: glass fibers not wet out with resin
B. Resin runs: runs of resin and sand on the surface.
C. Dry areas: areas with glass not wet out with resin.
D. Delamination: separation in the laminate.
E. Blisters: light colored areas larger than ½ inch in diameter.
F. Crazing: cracks caused by sharp objects.
G. Pits of Voids: air pockets.
H. Wrinkles: smooth irregularities in the surface
I. Sharp projection: fiber or resin projections necessitating gloves for handling.

23.04 FRP MANHOLE LINER DESIGN

A. INTERIOR ACCESS:

All manhole liners shall be designed so that a ladder or step system can be supported by the installed manhole liner.

B. MANWAY REDUCER:

Manway reducers will be concentric with respect to the larger portion of the manhole liner diameters through 60 inches. Larger manhole liners may have concentric or eccentric manway reducer openings.

C. COVER AND RING SUPPORT:

The manhole liner shall provide an area for which grade rings or brick can be installed to accept a typical metal ring and cover and have the strength to support a traffic load without damage to the manhole liner.

D. EXTERIOR SURFACE:

The exterior surface shall be relatively smooth with no sharp projections. Hand-work finish is acceptable if enough resin is present to eliminate fiber show. The exterior surface shall be free of blisters larger than 0.5 inch in diameter, delamination or fiber show.

E. INTERIOR SURFACE:

The interior surface shall be resin rich with no exposed fibers. The surface shall be free of crazing, delamination, blisters larger than 0.5 inch in diameter and wrinkles of 0.125 inch or greater in depth. Surface pits shall be permitted if they are less than 0.75 inch in diameter and less than 0.0625 inch deep. Voids that cannot be broken with finger pressure and that are entirely below the resin surface shall be permitted if they are less than 0.5 inch in diameter and less than 0.0625 inch thick.

F. REPAIRS:

Any manhole repair is subject to meet all requirements of this specification.

G. MANHOLE LENGTH:

Manhole lengths shall be in 6-inch increments +/- 2 inches.

H. DIAMETER TOLERANCE:

Tolerance of inside diameter shall be +/- 1% of required manhole diameter.

23.05 PHYSICAL REQUIREMENTS

20.05.01 LOAD RATING

The complete wet well or manhole liner shall have a minimum dynamic-load rating of 16,000 ft-lbs when tested in accordance with A.S.T.M. 3753 Section 8. To establish this rating, the complete wet well or liner shall not leak, crack, or suffer other damage when load tested to 40,000 lbs and shall not deflect vertically downward more than ¼ inch at the point of load application when loaded to 24,000 lbs.

20.05.02 STIFFNESS

The wet well or manhole liner cylinder shall have a minimum pipe-stiffness values shown in the table below when tested in accordance with A.S.T.M. 3753 Section 8.

STIFFNESS REQUIREMENTS

FIBERGLASS WET WELL		MANHOLE LINER	
LENGTH-FT	F/AY – PSI	LENGTH-FT	F/AY – PSI
10 - 20	2.01	3 – 6.5	0.75
21 - 30	3.02	7 – 12.5	1.26
31 - 40	5.20	13 - 20.5	2.01

PHYSICAL PROPERTIES:	FIBERGLASS WET WELL		MANHOLE LINER	
	HOOP DIRECTION	AXIAL DIRECTION	HOOP DIRECTION	AXIAL DIRECTION
a. Tensile Strength (psi)	18,000	5,000	18,000	5,000
b. Tensile Modules (psi)	0.8 x 10^6	0.7 x 10^6	0.6 x 10^6	0.7 x 10^6
c. Flexural Strength (psi)	26,000	4,500	26,000	4,500
d. Flexural Modules (psi)	-	-	1.4 x 10^6	0.7 x 10^6
(no ribs – 48”, 60”, 72”)	1.4 x 10^6	0.7 x 10^6	-	-

(with ribs – 96", 144")	0.7 x 10^6	0.7 x 10^6	-	-
e. Compressive (psi)	-	-	18,000	5,000

23.06 TEST METHODS

Tests shall be performed as specified in A.S.T.M. 3753 latest edition, Section 8.

23.07 INSTALLATION

23.07.01 FIBERGLASS WET WELL INSTALLATION

A. EXCAVATION:

A. General:

The limit of excavation shall be such to allow for placing and removing forms, installing sheeting, shoring, bracing, etc. The Contractor shall pile excavated material in a manner that will not endanger the work and will avoid obstructing sidewalks, driveways, power poles, etc. Drainage shall be kept clear.

B. Vertical Sides:

When necessary to protect existing or proposed structures or other improvements, the Contractor shall maintain vertical sides of the excavation. The limit shall not exceed three feet outside the footing on a vertical plane parallel to the footing except where specifically approved otherwise by the Engineer. The Contractor shall provide and install any sheeting, shoring, and bracing as necessary to provide a safe work area as required to protect workmen, structures, equipment, power poles, etc. The Contractor shall be responsible for the design and adequacy of all sheeting, shoring, and bracing. The sheeting, shoring, and bracing shall be removed as the excavation is backfilled in such a manner as to prevent injurious caving.

C. Sloping sides:

Where sufficient space is available, the Contractor shall be allowed to back slope the sides of the excavation. The back slope shall be such that the excavation shall be safe from caving. The type of material being excavated shall govern the back slope used, but in any case, the back slope shall be no steeper than 1 foot horizontal to 1 foot vertical.

D. Dewatering:

The Contractor shall keep the excavation free from water by use of cofferdams, bailing, pumping, well pointing, or any combination as the particular situation may warrant. All dewatering devices shall be installed in such a manner as to provide clearance for construction, removal of forms, and inspection of exterior of form work. It is the intent of these specifications that the foundation be placed on a firm dry bed. The foundation bed shall be kept in a dewatered condition a sufficient period of time to insure the safety of the structure. All dewatering methods and procedures are subject to the review and

acceptance of the Engineer. The excavation shall be protected from excessive rainfall, drainage and drying. It is the intent of these specifications that the Contractor provide a relatively smooth, firm foundation bed for footings and slabs that bear directly on the undisturbed earth without additional cost to the Owner, regardless of the soil conditions encountered. The contractor shall pile excavated material in a manner that will not endanger the work.

E. Unauthorized Over Excavation:

Excavation for slabs, footings, etc., that bear on earth shall not be carried below the elevation shown on the drawings. In the event the excavation is carried on below the indicated elevation, the Contractor shall bring the slab, footing, etc., to the required grade by filling with concrete having a minimum compressive strength of at least 3,000 psi at 28 days.

B. OPEN BOTTOM WETWELL INSTALLATION:

Bottom of excavation should be compacted to 95% Standard Proctor Density. Pour reinforced concrete base one foot deep and at least two feet larger than the fiberglass wet well outside diameter. As soon as the concrete has set-up enough to support the fiberglass wet well, lower the wet well into place. Pour a minimum of one foot of reinforced concrete on the inside, also a minimum of one foot deep and two feet from the fiberglass wet well wall on the outside of the wet well. Insert ram neck type sealant on the outside of fiberglass wet well around the bottom where the fiberglass and concrete come together.

C. CUTOUTS:

Cutouts in wet well wall should be made with proper cutting tools, such as jig saw or hole saw. Do not use axe or other impact-type tools.

D. INSTALLATION OF SEWER PIPE:

A. Type1: Make the cutout in the wet well wall, the outside diameter of pipe, plus 1/2 inch maximum. Slip pipe into position. Apply industrial grade silicone around the pipe next to the wet well wall cutout on the inside and on the outside. Cover the outside siliconed area with epoxy grout and backfill.

B. Type 2: Make the cutout in the wet well wall, the outside diameter of pipe, plus 1/2 inch maximum. Grind the outside surface of the pipe and both the inside and the outside surfaces of the cutout in the wet well wall. (Apply a priming agent to any PVC pipe that might be used before fiberglass lay-up.) Insert the pipe through the cutout in the wall of the wet well. Apply fiberglass putty to the inside and the outside of the wet well wall cutout, filling openings between pipe and cutout. Make a good radius for the fiberglass lay-up. After putty has set-up, fiberglass the pipe into place. Use one layer of woven roving sandwiched between two layers of fiberglass mat. Allow fiberglass to completely set-up before backfilling. Fiberglass layup method to comply with A.S.T.M.-D3299 specifications.

C. Type 3: Install Insert-A-Tee type fitting per manufacturers instruction. (Fowler Mfg. Co., P.O. Box 767, Hillsboro, Or. 97123. PH. 503-359-5417) or approved equal.

E. CLOSED BOTTOM WET WELL INSTALLATION:

Bottom of excavation should be compacted to 95% Standard Proctor Density. Wet wells with diameters up to 54 inches and depths no greater than 12 feet, may be placed on a base of 6 inches of crushed stone. Wet wells with depths greater than 12' feet, should have a poured reinforced concrete base at least one foot deep and at least two feet larger than fiberglass wet well outside diameter. The fiberglass wet well shall be lowered into the wet concrete and brought to plumb. Pour reinforced concrete over the anti-flotation flange. The concrete shall be a minimum of one foot deep and two feet from outside wall of the wet well. More concrete may be required in high water table areas.

F. INTERNAL BOTTOM RIBS:

Wet wells with internal bottom stiffening ribs will require that concrete be poured on the inside of the wet well to a depth equal to that of the stiffening ribs. This is typically 4 – 6 inches.

G. FIBERGLASS WET WELL TOP:

The fiberglass top may have stubouts installed or may have a raised fiberglass collar around the hatch opening. The fiberglass top has been designed to withstand the weight of a concrete reinforced slab to be installed over it.

H. BACKFILL:

A. Backfill Material: Unless shown otherwise on the drawings, sand or crushed stone shall be used for backfill around the wet well for a distance of two feet from the outside surface and extending from the bottom of the excavation to the bottom of the top slab. Suitable material chosen from the excavation may be used for the remainder of the backfill. The material chosen shall be free of large lumps or clods, which will not readily break down under compaction. This material will be subject to review and acceptance of the Engineer. Backfill material shall be free of vegetation or other extraneous material. Excavated materials which are to be used for fill or backfill may be stockpiled on the site. Location of stockpiles shall be approved by the City. Top soil should be stockpiled separately and used for finish grading around the structure.

B. Schedule of Backfilling: The Contractor may begin backfilling of wet well as soon as the concrete has been allowed to cure and the forms removed.

C. Backfill Lifts: Backfill shall be placed in layers of not more than 12 loose measure inches and mechanically tamped to at least 95% Standard Proctor Density. Flooding will not be permitted. Backfill shall be placed in such a manner as to prevent any wedging action against the structure.

I. TOP SLAB SUPPORT:

When installing a fiberglass wet well without a fiberglass top you should pour a reinforced concrete slab support a minimum of two feet outside of fiberglass wet well wall and a minimum of six inches thick. The slab shall be specified and designed by engineer or precast manufacturer engaged by contractor per Contract Documents.

23.07.02 FRP MANHOLE LINER INSTALLATION

Unless shown otherwise on drawings and approved by the engineer, concrete grout shall be used for backfill between the old manhole and the new fiberglass manhole liner. The backfill around the excavated reducer section shall be stabilized sand or crushed stone. The material chosen shall be free of large lumps or clods which will not readily break down under compaction. This material will be subject to approval by the engineer.

The concrete grout backfill shall be poured in layers of not more than 12 inches in even lifts. The reducer section to be backfilled in 12-inch lifts evenly and compacted to 95% Standard Proctor Density.

23.08 SHIPPING AND HANDLING

23.08.01 FIBERGLASS WET WELL SHIPPING AND HANDLING

Do not drop or impact the wet well. Wet wells shall be chocked if stored horizontally. If wet wells must be moved by rolling, the ground transversed shall be smooth and free of rocks, debris, etc. FRP wet wells may be lifted by the installation of two lifting lugs as specified by the manufacturer on the outside surface near the top or by a sling or “choker” connection around the center. Use of chains or cables in contact with the wet well surface is prohibited. Wet wells may be lifted horizontally using one support point.

23.08.02 FRP MANHOLE LINER SHIPPING AND HANDLING

Do not drop or impact the fiberglass manhole liner. Fiberglass manhole liner may be lifted by inserting a 4″x 4″x 30″ timber into the top of manhole with cable attached or by a sling or “choker” connection around center of manhole, lift as required. Use of chains or cables in contact with the manhole surface is prohibited.

END OF SECTION

SECTION 33 – FRAC-OUT PLAN FOR SUBAQUEOUS CROSSINGS

33.01 GENERAL

A. The Contractor must implement and adhere to the Best Management Practices (BMPs) and Frac-Out Plan as outlined in this Specification Section for projects including subaqueous transmission lines installed, repaired, or replaced using horizontal directional drilling and permitted through the US Army Corps of Engineers (USACE).

B. The Contractor shall furnish all necessary equipment and provide the necessary labor to adhere to the BMPs and Frac-Out Plan procedures.

33.02 BEST MANAGEMENT PRACTICES (BMPs)

The Contractor will implement the following Best Management Practices (BMPs) to minimize the potential for adverse environmental impacts during horizontal directional drilling activities:

A. BMPs for erosion control within the staging area shall be implemented and maintained at all times during the drilling and back-reaming operations to prevent siltation and turbid discharges in excess of State Water Quality Standards pursuant to Rule 62-302, F.A.C. Methods shall include, but are not limited to the immediate placement of turbidity containment devices such as turbidity screen, silt containment fence, hay bales, and earthen berms, etc. to contain the drilling mud. Earthen berms shall not be utilized as to impact wetlands or other surface waters.

33.03 FRAC-OUT PLAN

A. Measures used to prevent frac-out during the HDD operation shall include maintaining the proper boring depth for the soil conditions along the drilling route as well as proper management of drilling fluids circulation pressure. The minimum distance between the top of the over-ream hole and surface shall be maintained according to the Contract Documents. This distance should be sufficient to prevent frac-out when drilling with controlled and monitored drill fluid pressure.

B. Non-toxic fluorescent dyes will be added to the drilling lubricant as a method for monitoring bentonite releases in the underwater portions of this drilling. Details of the fluorometry monitoring method shall be submitted to the USACE prior to the pre-construction meeting

C. Drilling fluid returns (flow of drilling fluids to the HDD entry/exit pit location) will be continuously monitored visually during the installation.

D. The volume and circulation pressure of drilling fluid in the HDD bore and over-ream shall be monitored at all times during the HDD operation. The HDD drill rig operator will monitor the downhole annular pressure at all times. Should a drop in volume occur, immediately conduct a visual inspection of both terrestrial and pavement portions of the HDD corridor. A visual inspection of all project area and adjacent waterbodies, and storm and sanitary sewer systems shall also be conducted.

E. Should the detection of dye or a drop in volume of bentonite occur, the Contractor will follow the Release Procedures outlined below.

F. All drilling fluids associated with the HDD operation shall be contained onsite. The volume of the drilling fluids recirculation/solids settlement pit and onsite storage/frac tanks and watertight roll-off containers shall be submitted for review by the Engineer. As required during the HDD process, screened solids and surplus drilling fluid will be removed and disposed of off the project site at a location of the HDD Contractor's choice in accordance with applicable regulations. At the conclusion of all drilling operations, drilling fluid remaining in the pit will be settled, removed completely from the pit, and hauled to a disposal site of the HDD Contractor's choice in accordance with applicable regulations within 48 hours of the pipe pull-in. After back-reaming, drilling materials will be removed from the inside of the pipeline by pigging it from the exit point towards the rig area. The paved and/or vegetated surface of the disturbed pit area shall be restored according the Contract Documents.

G. At all times, adequate protection will be taken to avoid impacts to pavement, structures, and Aquatic Preserve/Outstanding Florida Waters and contiguous wetlands. This shall include, but is not limited to halting of construction/drilling and/or placement of turbidity containment devices in accordance with the applicable regulations.

H. A pump tanker or vactor truck shall be onsite and available at all times. The Contractor shall demonstrate the contracted availability of additional pump tankers and/or vactor trucks if needed for surplus or frac-out drilling fluids.

I. A spill kit (i.e., absorbent pads/brooms, shovels, goggles, gloves) shall be onsite and available at all times.

33.04 RELEASE PROCEDURE

A. If a frac-out is confirmed, all construction activity contributing to the frac-out shall cease immediately.

B. If the return drilling fluid is less than the projected amount to be recovered, divers shall begin a search for the missing material within 1 hour of potential release if the drilling takes place under a body of water. Once the drilling fluid and frac-out is located, then the drilling mud containment plan shall be immediately implemented.

C. The Contractor shall notify the City upon confirmation of the occurrence. The notification shall include the time of the frac-out, location and impact on pavement and improvements, and the environmental conditions of the impacted area.

D. If a frac-out has occurred during construction activities, the Contractor shall coordinate with the City in order to notify the USACE of Engineers, within 24 hours of the occurrence. The notification shall include the time of the frac-out, the response time of the underwater diver, and the environmental conditions of the affected area.

F. If the loss of drilling fluid or excess fluid pumping/recirculation pressure results in the heaving and/or settlement of pavement, curb, sidewalk and/or other infrastructure, the HDD Contractor shall immediately mobilize all equipment, manpower and devices to recover the drilling fluid, relieve the fluid pressure, stop any heaving or settlement of infrastructure and protect the public. The HDD Contractor shall prepare a remediation plan to repair, replace, or restore the affected infrastructure in accordance with the governing jurisdiction's standards, reviewed for approval prior to implementation.

G. Before continuing with the HDD operation, the HDD Contractor shall prepare and submit for approval a revised plan for successful completion of the required project. The plan shall identify the manpower, equipment, drilling fluid, additives, pump pressures, original bore hole sealing, and bore path modifications that may be required.

33.05 DRILLING MUD CONTAINMENT PLAN

A. Should the release of drilling materials occur on land, a sediment fence shall be constructed around the site and the material shall be removed by vacuum truck.

B. Should the release of drilling materials occur in-water, clean-up with a vacuum system shall commence within 24 hours.

C. The scientist/biologist underwater divers will guide the suction hose of the pump to minimize both the removal of natural bottom material and the disturbance of any existing vegetation.

D. Any escaped drilling lubricant must be pumped into filter bags or directly into a vactor truck.

E. A barge company will be contacted to transport a vactor truck should it be needed to respond "in-water."

F. Once the spill is contained, the escaped drilling lubricant shall be properly disposed of in an approved upland disposal site.

G. Clean-up with a vacuum system shall commence within 24 hours.

H. After containment/recovery of the drilling material/resources, the HDD Contractor shall prepare a detailed written report to be submitted to the City and USACE, within 10 business days, that summarizes the incident, including the following:

1. Details on the release event, including an estimate of the bentonite released;
2. The location and time of release;
3. The size of the area impacted, and the success of the clean-up action;
4. Name, firm, address and telephone number of HDD Contractor reporting;
5. Photos and/or digital recording of frac-out area and impacts;
6. Date and Time;
7. How the release occurred;
8. The type of activity that was occurring around the area of the inadvertent return;

9. Description of any sensitive areas and their location in relation to the inadvertent return;
10. Description of the methods used to clean up or secure the site;
11. Changes to the drilling fluid properties or drilling process (if any); and
12. Mitigation of any impacted public utility infrastructure and water bodies from the frac-out

END OF SECTION

SECTION 34 –MANHOLE INSPECTION

34.01 SCOPE OF SERVICES

A. The Contractor shall perform visual inspections of the existing manholes and record any defect discovered. The visual inspection shall include surface photo, manhole cover and frame, chimney, walls, invert, and all appurtenances.

B. The nature of the inspections shall be to verify the physical condition of the manhole and to provide a permanent record of the existing condition as it relates to dimensions, materials, obstructions, breakage, connections, and deterioration. Inspections may be performed by personnel entry or from the surface utilizing pole mounted camera equipment to visually inspect the chimney, cone, wall, bench, pipe seals and invert conditions, and conditions of connecting pipes.

C. All City assets will be identified using the established facility identification code (FID) for all inspection reports, geographical exhibits, data sets and asset management tasks. Assets may include, but not be limited to, manholes, clean outs, gravity mains, force mains, air release valves, and conflict structures. Asset FIDs will be provided to the Contractor prior to the start of inspection. Failure to utilize the FID could result in additional inspection at the Contractors expense.

34.02 REQUIREMENTS

A. The Contractor shall inspect the manhole surroundings and the manhole interior using visual means and a digital camera for documentation.

B. All inspections shall be recorded.

C. All inspection forms shall be scanned and submitted as .PDF files.

D. All inspection data shall be entered into a NASSCO Manhole Assessment Certification Program (MACP) compliant database per Specification Section 20 “CCTV Inspection and Pipe Cleaning”.

E. The inspection photographs, report documents, and inspection database shall be in accordance with the specifications and NASSCO MACP.

F. Contractor shall maintain a copy of all report materials. The Contractor shall provide comments as necessary to fully describe the existing condition of the manhole on the inspection forms.

G. Contractor shall be responsible for modifications to equipment and/or inspection procedures to achieve City report requirements.

H. No Work shall commence prior to approval of the submitted materials by the City. Once accepted, the report materials shall serve as a standard for the remaining work.

34.03 QUALITY ASSURANCE

A. Use of PACP/MACP certified technicians to review/document defects in the office (post process) is acceptable.

B. The CCTV Contractor must have an internal quality assurance/quality control (QA/QC) program in place and all inspection data shall be subjected to the procedures prior to submittal to the City. The City will perform QA/QC audits on submitted data.

A QA/QC shall be performed by NASSCO MACP and PACP certified personnel.

34.04 SHOP DRAWINGS AND SUBMITTALS

A. Submittals shall be submitted to the City for review and acceptance prior to construction in accordance with Specification Section 03 -Submittals.

B. The above deliverables shall be submitted to the City for approval.

C. The manhole inspection reports and database shall be in accordance with the specifications and NASSCO MACP.

34.05 NOTIFICATION

The Contractor shall notify the City a minimum of 48-hours prior to performing any inspection work. The City may be present during part or all of the inspections. No payment will be made for inspections performed without proper schedule notification

34.06 EXECUTION

A. The inspection crew shall mobilize to the site of the manhole inspection and immediately establish traffic control measures per City of St. Pete Beach and Florida Department of Transportation (FDOT) requirements as well as any measures required to protect pedestrians. The crew shall inspect each manhole and record required information.

B. All manhole structures shall be located. Metal detectors shall be used to locate buried manholes. Once a buried manhole has been located, it shall be marked with paint and/or flagging, if necessary. All pertinent information available shall be recorded including area photo, address, etc. Contractor shall notify the City weekly with a list of those manholes that could not be fully inspected due to access issues. The City may arrange to have some or all these manholes exposed, or otherwise

made accessible for full inspection. The City will notify Contractor of the status and may authorize re-inspection.

34.07 MANDATORY INSPECTION HEADER INFORMATION

Once the manhole is located, the following mandatory information shall be recorded on the inspection form. Note that the mandatory fields noted below are more inclusive than the MACP requirements. All available information shall be collected and recorded for those manholes that are buried, could not open, surcharged, etc.

1. Manhole Number (City of St. Pete Beach Asset Number)
2. Sheet number
3. Date
4. Time
5. Surveyor's Name
6. Certifications Number
7. Drainage area (tributary Pump Station Number)
8. Location (street number and name)
9. Downstream pipe length (feet)
10. Rim to grade (nearest 0.1 foot)
11. Pre-cleaning method (using approved MACP codes)
12. Location code (using approved MACP codes)
13. Manhole surface type (using approved MACP codes)
14. Potential for runoff (using approved MACP codes)
15. Access point type (using approved MACP codes)
16. Inspection status (using approved MACP codes)
17. Area photo image reference Internal photo image reference

34.08 MANHOLE COMPONENT OBSERVATIONS

The inspection crew shall complete all fields within the manhole component/observation section of the inspection form. The following information shall be collected:

1. Cover type (solid, vented, bolted)
2. Cover size (top surface diameter in inches)
3. Cover material
4. Number of vent holes
5. Cover/Frame fit (cover to frame fit, MACP codes)
6. Cover condition (MACP codes)
7. Cover insert type
8. Cover insert condition
9. Frame condition
10. Frame seal condition
11. Frame offset distance
12. Frame seal inflow
13. Wall material

14. Interior wall coating
15. Wall diameter
16. Bench present
17. Channel installed
18. Additional remarks relevant to the manhole

34.09 MANHOLE INTERIOR INSPECTION

The inspection crew shall determine the types of defects within the manhole, document each defect on the manhole form and take a photograph of each defect. The manhole chimney, cone, wall, bench, and channel shall be inspected for structural integrity, signs of I/I and the presence of roots. All documentation shall follow NASSCO MACP standards. Each defect will be documented on the inspection form with the following information:

1. Defect number
2. Component of manhole containing defect
3. Defect code (using approved MACP codes)
4. Image Reference (using City approved file naming structure)

34.10 CONNECTING PIPE DETAILS

Each pipe entering and exiting the manhole shall be photographed where possible and inspected to determine diameter, pipe material, debris levels, and rim to invert distance (to 0.1-feet). The pipe inspection will include the following information:

1. Pipe photo (using City approved file naming structure)
2. Pipe direction (incoming or outgoing)
3. Pipe clock positions (6:00 position = outgoing)
4. Pipe diameter
5. Pipe material (using PACP codes)
6. Rim to invert distance (measured to nearest 1/10th of a foot)
7. Pipe special condition (drops, force mains, etc. using approved MACP codes)
8. Debris depth
9. Connecting structure number; if manhole or cleanout, service line clock position, stub-out clock position, etc.
10. Pipe seal condition (using approved MACP codes)
11. Pipe seal roots (using approved MACP codes)
12. Observed pipe defects, obstructions, roots, etc. (using PACP codes)

34.11 MANHOLE SKETCH, MAP UPDATE, AND NOTES

The inspection crew shall complete the manhole plan view sketch noting all connecting pipes. Any special observations or notes may be added to the profile sketch on the field form. Influent and effluent lines in each manhole shall be compared to the existing map and corrections noted in the sketch section of the field form.

34.12 NOTIFICATION OF EMERGENCY CONDITIONS

Inspection crews shall immediately notify the City and/or on-site inspector of any defects posing imminent danger to the public (missing lids, covers broken during inspection, sink holes, etc.) and any observed pipe blockages or potential overflow conditions.

34.13 COMPLETION

Once the inspection is complete the field crew shall make certain the ring is clean and does not have any debris preventing a proper cover fit. The manhole lid shall be replaced, and any displaced items moved back into place.

A list of manholes that could not be fully inspected, along with the problem explanation, shall be forwarded to the City weekly throughout the inspection work. If the Contractor has completed accessible inspections, and the City authorizes, then Contractor may be required to re-mobilize at the same unit price and complete the requested inspections. All re-inspections will be at the same contracted unit price. Any map updates shall be consolidated and forwarded to the City with the submitted inspections.

34.14 PHOTOGRAPH REQUIREMENTS

A. During each inspection the following series of photographs shall be taken:

1. Photograph: During the inspection, a photograph shall be taken of the manhole cover showing location within the roadway, shoulder, or easement as appropriate. Photographs shall be taken of any indications of previous overflows such as watermarks and paper or other debris typical of sewer overflows. Surface photographs shall be oriented in the direction of the outgoing pipe to show the pipeline cover and easement condition. The area photographs should show the manhole visible in the foreground where possible. A minimum of 1 area photo is required.
2. Internal Photograph: Take a photograph of the manhole interior in plan view showing the general arrangement of the incoming and outgoing sewers, manhole walls, and other appurtenances. The internal condition photograph shall be oriented with the direction of the outgoing main line flow at the bottom of the photograph (6:00 position). A minimum of 1 internal photograph is required.
3. Manhole Defect Photographs: During manhole inspections digital photographs shall be taken of all defects. Photographs must clearly and accurately show each defect and correspond to defects and photo numbers logged on the manhole inspection form. A minimum of 1 photo for each observed defect is required
4. Connecting Pipe Photographs: The camera should then be pointed into all incoming and outgoing pipes where possible to capture general conditions within the pipes. Any obvious blockages or defects should be noted using

PACP defect codes. A minimum of 1 photo of each incoming or outgoing pipe is required.

B. During inspections manholes shall be free of steam, fog, water vapor, or other conditions that will impact the quality of photographs.

C. All photographs shall adequately capture the manhole conditions and details of defects. Lighting and camera quality shall provide a clear, in-focus picture of the manhole interior, manhole defects, and manhole. The lighting shall provide uniform light free from shadows or hot spots.

D. If larger than 640 x 480 resolution, then photo will be converted to 640 x 480. Photos less than 640 x 480 are not acceptable and converting upward to 640 x 480 is not acceptable. All photographs shall be resized to 640 x 480 resolution to minimize file size.

E. The images shall be kept electronically, copied to a CD, DVD, or external hard drive. Photographs shall be named according to the photograph naming conventions included herein.

F. All digital photographs shall be referenced on the manhole inspection form and electronic database.

G. All digital photographs shall be renamed in accordance with a photo file naming convention. An example is shown below:

1. Area Photo = Manhole ID, A, Photo Number, jpg
   Example: 3965002A0001.jpg
   Manhole: 39650002
   A=Area Photo
   Photo No.0001
2. Internal Photo = Manhole ID, I, Photo Number, jpg
   Example: 3965002I0001.jpg
   Manhole: 3965002
   I=Internal Photo
   Photo No.0001
3. Manhole Defect Photo = Manhole ID, M, Photo Number, jpg
   Example: 3965002M0015
   Manhole: 3965002
   M=Manhole Defect Photo
   Photo No. 0015
4. Pipe Photo = Manhole ID, P, Photo Number, jpg
   Example: 3965002P0002.jpg
   Manhole: 3965002
   P=Pipe Photo
   Photo No. 0002

34.15 MANHOLE NUMBERING, FORMS, AND DEFECT CODES

The Contractor shall use the City manhole numbering system when performing the inspections for this Project. Manhole numbers will be provided by the City. Defect codes shall conform to those specified in the NASSCO MACP specification.

All City assets will be identified using the established facility identification code (FID) for all inspection reports, geographical exhibits, data sets and asset management tasks. Assets may include, but not be limited to, manholes, clean outs, gravity mains, force mains, air release valves, and conflict structures. Asset FIDs will be provided to the Contractor prior to the start of inspection. Failure to utilize the FID could result in additional inspection at the Contractors expense.

34.16 SITE RESTORATION

After inspecting manholes in an area, the work site shall be cleaned and restored to pre-Work conditions. If manhole is buried and exposed, then restore site by placing material back over exposed manhole. No re-sodding is anticipated or included in the pricing.

34.17 DELIVERABLES

The Contractor will be required to submit the following deliverables at the completion of inspection.

A. During each inspection the following series of photographs shall be taken:
   1. Inspection session header information (see required fields above)
   2. Component observations
   3. Manhole inspection details including defects observed and photo image references
   4. Connecting pipe details
   5. Manhole plan view sketch

B. Marked up field maps detailing map corrections and/or discrepancies noted during inspection.

C. Inspection digital photograph in City approved format and resolution and assigned file names in accordance with the City standard during each inspection the following series of photographs shall be taken.

D. All information and reports shall be exported to the electronic database described in technical specification Section 34.02.

END OF SECTION

THIS PAGE INTENTIONALLY LEFT BLANK

SECTION 35 – CHEMICAL SEALING OF HOST PIPE AND SERVICE CONENCTIONS

35.01 GENERAL

The Work in this section includes furnishing all labor, materials, tools, and equipment for reducing infiltration within the host pipe and service connections to an acceptable level prior to liner installation to ensure that placement and curing is not adversely affected by the presence of excessive infiltration and seal annular space between liners and host pipes at service lateral connections. Accordingly, the Engineer will base acceptance of this portion of the Work on the reduction of infiltration at host pipe joints and other defects to a level that will insure completion liner installation in accordance with these specifications.

Contractor shall furnish all labor, materials, equipment, and incidentals to seal active infiltration at host pipe joints, service lateral connections, and other defects as directed. Sealing shall be from inside the host pipe using a device equipped with a pan and tilt camera and inflatable packer as described herein.

35.02 PRODUCTS

A. Sealing Materials

1. The sealing compound shall be Acrylic base gel -Avanti AV-100, AV-1 18, Urethane base gel — Avanti AV-350 or Acrylate base gel- Deneff AC-400 or approved equal and shall be suitable for use in domestic wastewater collection systems. Handling, formulation and storage of the sealing gel compound shall be in strict conformance with the manufacturer's recommendations. The uncured gel shall be delivered to the site in unopened containers, with the date of manufacture clearly indicated, no uncured gel manufactured more than six months prior to the date of application shall be utilized. Residual sealing materials shall be removed from the wastewater collection system after injection to ensure no flow reductions, restriction or blockage occur.

2. Icoset additive shall be added to the sealing compound for gel strengthening. The quantity of Icoset additive will be according to the manufacturer recommendation. The sealing compound admixture shall be adjusted to meet specified viscosity and reaction time.

35.03 SUBMITTALS

A. The Contractor shall submit the following to the Engineer in accordance with Specification Section 03 - Submittals

1. Gel compounds
2. Installation equipment

35.04 EQUIPMENT

A. General

1. Sealing equipment shall consist of two separate pumping systems capable of supplying an uninterrupted flow of sealing materials to completely fill the voids. Pumps, fittings and hoses shall be designed to transport a high viscosity material and shall not be affected by acetone or ketone solvents.

2. Sealing materials shall pass from the pumping system through instant reading, controlled flow meters and then through a dual hose system into the sealing device. The device (referred to hereafter as a packer) shall be a cylindrical case of a size less than pipe size, with the cables at either and used to pull it through the host pipe.

3. Generally, the equipment shall be capable of performing the specified operations in pipes where flows do not exceed 25 percent without resorting to any method of flow control.

4. Air impervious inflatable sleeves shall be mounted over the cylinder with the ends of the sleeve sealed to the ends of the casting. The sleeves shall be so constructed that they can be pneumatically expanded from the center to both ends. The center portion of the sleeve shall be sealed to the casing by a broad confining band. When the packer is inflated. Two widely spaced annular bladders shall be formed, each having an elongated shape and producing an annular void around the confined portion of the sleeve. No sealing device which is expanded mechanically nor where the expansion sleeve is not continuous will be allowed in order to prevent damage to the pipe from excessive amounts of sealing pressures or air leakage in the center area of such sealing device. The sleeve shall be a low void packer.

5. Lateral service sealing is accomplished with a "Logiball" lateral packer. The objective of the lateral service packer is to seal the lateral service connection to the main pipe and the first 18-inches of the service lateral.

35.05 EXECUTION

A. General

Sealing shall be by the pressure grout method. Generally, this shall be accomplished by forcing chemical sealing gel materials through a system of pumps and hoses into and through the joints and other defects of the host or lateral pipe from the packer within the pipe. Jetting or driving pipes from the surface that could damage or cause undermining of the wastewater system shall not be allowed.

B. Grout Mixing

1. The Contractor shall mix all grout at the job site in the presence of the Engineer. No grout will be used on the job which has been mixed off site and is in the Contractor’s

tank when the truck drives on site. The Contractor's personnel shall follow the manufacturer's recommendations for the mixing and safety procedures to protect personnel from any adverse effects of the grouting compounds. Powder and additives shall be added and mixed at rates, which will minimize the formation of lumps within grout tanks solutions. All additives will be thoroughly mixed in the grouting component tanks.

2. Prior to application of grout for seal purposes. a pump test will be performed to determine if equal quantities of grout are being pumped from the grout component tanks. Separate containers shall be used to capture the discharges from the grout component tanks. One gallon of grout shall be pumped, and the pump strokes shall be counted. If unequal quantities are being pumped, the Contractor shall take corrective action. The pump test shall be repeated until equal quantities are pumped from the grout tanks.

3. During the grouting process, the Contractor shall monitor the grout component tanks to make sure that equal quantities are being pumped. If unequal levels are noted in the tanks. the pump test shall be repeated as described above. At the beginning of each day, when new batches of grout are mixed and when grout additives are modified to change gel times, a test shall be performed with quantities of grout to determine the grout mixture gel time. The Contractor shall have accurate scale(s) which shall be used to weigh the various non water grout solution components.

C. Host Pipe Sealing by Pressure Grout Method

1. The packer shall be positioned over the area of infiltration by means of a measuring device at the surface and the closed circuit television camera in the pipe. Accurate measurement of the location of the defect to be sealed shall be made, using a portion of the packer as a "Datum" of measurement point or target. Such measurement, target or point shall also be used to obtain necessary measurement for positioning injection area of packer over the area to be sealed.

2. The packer sleeves shall then be pneumatically expanded and shall seal against the inside periphery of the pipe to form a void area at the joint or defect now completely isolated from the remainder of the pipe segment.

3. Into this isolated area sealant materials shall be pumped through the hose system at controlled pressures, which are in excess of groundwater pressures. The pumping, metering and packer shall be integrated so that proportions and quantities of materials and pressures for materials and sealing gel can be instantly monitored and regulated in accordance with the type and size of the leak, percentage of voids being filled, type of soil surrounding the pipe and the rate of flow of the sealing gel solution in relation to the back pressures. These parameters should follow the manufacturer's specifications and guidelines.

4. Upon completion of the injection, the television camera shall be moved to a position to observe and inspect the results of the injection. If inspection shows the seal was

not effective, the process shall be repeated until infiltration has been reduced to an acceptable level for liner installation.

5. The packer shall be moved forward, wiping away the excess grout. The excess sealing material removed from the joint by the grouting equipment shall be flushed or pushed forward to the next downstream manhole, removed from the wastewater system and disposed of by the Contractor as specified by disposal of debris resulting from cleaning operations. in no case shall excess grout material be allowed to accumulate and be flushed down the system.

6. it is intended that chemical sealing shall be performed on host pipe immediately prior to the installation of the liner unless otherwise authorized by the Engineer. The Contractor shall notify the City Inspector a minimum of 48 hours prior to commencing Chemical sealing operation. The quantity of grout used shall be verified by the City Inspector.

7. Any part of the wastewater system damaged as a result of the Contractor's operations shall be promptly repaired by, and at the expense of, the Contractor.

8. All activities shall be video inspected during the sealing operation. The video shall be submitted to the Engineer for review and for permanent record. The video inspection shall comply with the requirements of the Technical Specification Section headed "Closed Circuit Television Inspection".

D. Lateral Service Sealing by Pressure Grout Method

1. Air testing laterals shall be accomplished by isolating the area to be tested with the lateral service packer and by applying positive pressure into the isolated void area. A pan and tilt camera shall be used prior to positioning the lateral packer. A sensing unit shall be used for continuous monitoring of the void pressure. This sensing unit shall be located within the void area and will accurately transmit continuous pressure readout to the control panel.

2. Joint testing and grouting for laterals will utilize a "Logiball" type system. The packer ends (end elements, sleeves) shall be expanded using controlled air pressure. The expanded ends shall seal against the inside periphery of the pipe to form a void area at the lateral, now completely isolated from the remainder of the pipe segment. Into this isolated area, sealant materials shall be pumped through the hose system at controlled pressures that are in excess of groundwater pressures. The pressure device shall accurately show psi to the nearest one tenth (0.1) pound and shall instantly respond to and record any change in the void pressure. The joint shall be tested with a gauge pressure of one-half psi per foot of depth of lateral pipe as measured by the deeper of the two manholes between which the lateral is located, or a minimum of 4 psi, whichever is larger. The pumping unit, metering equipment, and the packer device shall be designated so that proportions and quantities of materials can be regulated in accordance with the type and size of the leak being tested or sealed, percentage of voids being filled, type of soil surrounding the pipe and the rate of flow of the sealing gel solution in relation to the back pressures.

These parameters should follow the manufacturer's specifications and guidelines and be reviewed with the Engineer prior to the beginning of any grouting activities.

3. The test procedure will consist of applying air pressure into each isolated void area. To isolate a void, a lateral sealing packer shall be positioned straddling the lateral. The operator shall insert an inflatable inversion tube and inflate the packer ends to isolate the lateral. Once the designated pressure in the isolated void is displayed on the meter of the control panel, the application of air pressure will be stopped and a thirty-second waiting period will commence. The void pressure will be observed during this period. If the void pressure drop is greater than that allowed in the following Air Test Table, the lateral shall be considered to have failed the air test and shall be grouted as specified herein.

Air Test Table

Initial Void Pressure (psi)	Void Pressure After 30 Seconds
12-11	4.8-4.4
11-10	4.4-4.0
10-8	4.0-3.6
9-8	3.6-3.2
8-7	3.2-2.8
7-8	2.8-2.4
6-5	2.4-2.0

4. After completing the air test for each individual lateral specified herein, the lateral packer shall be deflated, with the void pressure meter continuing to display void pressure. If the void pressure does not drop to approximately zero, the equipment shall be adjusted to provide a zero void pressure reading at the monitor.

5. An air pre-test is not required for lateral sealing of service connections in main pipes that have been lined, as lateral sealing is required regardless of air test results. Pre and post-tests, and quantity of grout pumped shall be logged.

6. lateral sealing begins if the lateral does not pass the air test as described above. The lateral packer shall remain in position, thus maintaining the isolated void. Chemical grout sealant will be pressure injected through the lateral packer into the annular space between the inversion tube and the lateral pipe. Under pressure, the grout material shall be then forced out into the soil through leaking joints and pipe defects. The amount of chemical grout pumped is based on the number of pump strokes delivered to each lateral. The number shall be recorded on the sealing log.

7. Upon completion of the lateral sealing procedure, the lateral shall be air tested to verify the sealing of the connection. The air test will be the same as outlined above. If the sealed lateral fails the air test, the grouting procedure shall be repeated at no additional cost to the City. This sequence of air testing, grouting and subsequent air testing shall be repeated until either the lateral is sealed or it is determined that the grout consumption is too high and may result in the blockage of the lateral pipe. The final determination to stop subsequent attempts to seal a lateral will be made jointly

between the Engineer and the Contractor.

8. The Contractor shall verify lateral flow after the successful sealing of each lateral. With the lateral packer in position, the inversion tube shall be retracted and air pressure injected into the lateral. Should a pressure build in the lateral and not drop to zero in a few seconds, the packer will be moved off the connection and the connection shall be viewed with a television camera. With the camera viewing the connection point, an attempt will be made to obtain a water flush by the occupant. If no water is viewed during this procedure, it shall be assumed that the building service connection is blocked with grout and the responsibility to clear the lateral will be the Contractor's at no additional cost to the City.

9. The Contractor shall attach a notification form to the door of each home or building for which laterals have been grouted. This notification to the occupant shall state the following:

   The lateral service connection to (address) _____was grouted on (date) _____

   If any blockage of wastewater flow occurs, please call (emergency number)

   Any blockages that occur as a result of the lateral sealing operations will be cleared by the Contractor.

10. All activities shall be video inspected during both the air testing and sealing operation. The video shall be submitted to the Engineer for review and for permanent record. The video shall display at a minimum the date, manhole numbers, footage to the lateral, and void pressure readout. In addition, the data obtained during this operation shall be recorded on a lateral testing and sealing log provided by the Contractor. The log shall specify conditions of each service lateral sealed, break-in-service connection, lined pipe, etc.

E. Cleanup

Residual sealing materials that extend into the pipe, reduce the pipe diameter, or restrict the flow shall be removed and disposed of by the Contractor at an approved site. Sealed joints shall be left reasonably “flush” with the existing pipe surface. Excessive residual sealing materials in the system shall be cleaned to remove the residual materials.

F. Disposal

Furnish equipment for collection of cleaning solvents used in the cleaning of the sealing equipment. Collected solvents shall be disposed of by an approved solvent recovery process. Disposal of cleaning solvents into the wastewater system or into natural watercourses will be strictly prohibited.

G. Wastewater Flow Controls

When wastewater flows are above the minimum requirements or inspection of the complete periphery of the pipe is necessary to effectively conduct the inspection and sealing operations, one or more of the following methods of flow control shall be used.

1. A plug shall be inserted into the pipe at a manhole upstream from the section to be inspected and/or sealed. The plug shall be so designed that all or any portion of the wastewater flows can be released. During the inspection portion of the operation, flows shall be shutoff or substantially reduced in order to properly inspect the pipe at the invert. After the inspection is complete, flows shall be restored to normal or not more than 1/4 of the pipe diameter during the sealing operation. The Contractor will be responsible for preventing backups and overflows.

2. Where pumping is required, in the opinion of the Engineer, to assure completion of the inspection and sealing work, the Contractor will be required to furnish pumping and bypassing equipment. Refer to the requirements of Specification Section 16 ”Bypass Pumping” or Specification Section 01 "General”.

END OF SECTION

THIS PAGE INTENTIONALLY LEFT BLANK

SECTION 36 – REMOVAL OF PROTRUDING SERVICE CONNECTIONS

36.01 GENERAL

The Work in this section includes furnishing all labor, materials, tools, and equipment for internally removing and sealing protruding service connection taps and excess mortar in wastewater pipe segments scheduled to be rehabilitated.

Remove only those taps that protrude sufficiently as specified herein which are determined to interfere with the pipe rehabilitation. The intent is to remove the minimum number of protruding taps necessary to allow the entire pipe segment to be rehabilitated.

The Contractor shall maintain wastewater flows, including pump around pumping, as required at all times during the performance of this work.

The Contractor shall remove all dirt and debris caused by tap removal. Excess material will not be allowed to enter the wastewater system and carried to downstream reaches.

The Contractor is advised that this Contract requires work in active wastewater collection systems and shall follow all federal, state and local requirements for safety in confined spaces. The Contractor shall conform to all guidelines by the Occupational Safety and Health Administration (OSHA) Federal Regulations; 29 CR Ch. XVII, Section 1910.146 Confined Space Entry.

36.02 PRODUCTS

A. Equipment

1. Protruding taps shall be removed using an internal, remote-controlled intruding pipe remover. Excavation and replacement of protruding taps will not be allowed except under special situations authorized in writing by the Engineer.
2. The equipment shall consist of a main body containing a rotating head assembly equipped with carbide cutting edges. The rotating cutting head shall be driven by air or by electricity and shall be capable of cutting concrete, vitrified clay pipe or other materials commonly used for pipe construction with the exception of cast iron or steel.
3. The equipment shall be self-propelled or pulled through the pipe using winches and a cable set up between adjacent manholes.
4. The equipment shall be positioned using a TV camera in conjunction with the cutter assembly.

36.03 EXECUTION

A. Performance

1. The Contractor shall remove all service taps specified herein that inhibit pipe segment rehabilitation methods. The Contractor is required to remove protruding

taps to the point where they are flush with the inside wall of the pipe.

2. The Contractor shall maintain a complete record of all taps that were removed and furnish two (2) copies of this record at the completion of this work.
    a. The list shall show the Work Order Number, date, street, and pipe segment (by manhole numbers), station and location (left, right and top) of each tap removed.
    b. The list shall also show similar data for any taps that were not successfully removed, as well as the reason why removal was unsuccessful.
3. The Contractor shall protect existing main pipe and service laterals from damage caused by improper use of the equipment. Damage to a main pipe or service lateral caused by removal of a tap shall be repaired immediately, as directed by the Engineer, at the Contractor's expense. Any increase in infiltration at the service connection caused by the Contractor's removal of the protruding tap shall be chemically sealed by the Contractor at no additional cost to the City, in accordance with the Technical Specification Section headed "Chemical Sealing of Service Connections".
4. The Contractor shall remove all dirt and debris from the wastewater system following completion of tap removal.

B. Inspection

1. Contractor shall televise protruding service connection tap prior to removal, recording location and footage to service connection. Following successful completion of removal, Contractor shall perform post-construction television inspection.
2. Post-cleaning and post-rehabilitation television inspections shall be recorded on the same video as specified in the Technical Specifications Section headed "Closed Circuit Television Inspection." Video and data shall be submitted to the Engineer. Video and data shall become the property of the City.

END OF SECTION

SECTION 37 – WASTEWATER STRUCTURE REHABILITATION

37.01 GENERAL

The Work in this section includes furnishing and installing wastewater structure components and coatings for rehabilitation, structural enhancement, and corrosion protection of existing wastewater manholes, for the various diameters listed on the Bid Form. Wastewater structures include, but are not limited to, manholes, vaults, junctions, and wet wells.

The Contractor shall furnish all materials, labor, equipment, and services necessary for wastewater manhole component replacement and coating installation including: traffic control, bypass pumping and/or diversion of wastewater flows, void repair, inflow/infiltration elimination, surface preparation, structure component and coating installation, testing, surface restoration, and cleanup of the Work site.

37.02 GOVERNING STANDARDS

The following Standards are referenced in this section:

ASTM	C 109	"Standard Test Method for Compressive Strength of Hydraulic Cement Mortars"
ASTM	C 157	"Standard Test Method for Length Change of Hardened Hydraulic-Cement, Mortar, and Concrete"
ASTM	C 293	"Standard Test Method for Flexural Strength of Concrete (Using Simple Beam With Center-Point Loading)"
ASTM	C 307	"Standard Test Method for Tensile Strength of Chemical-Resistant Mortar, Grouts, and Monolithic Surfacing"
ASTM	C 308 Modified	"Standard Test Method for Working, Initial Setting, and Service Strength Setting Times of Chemical-Resistant Resin Mortars"
ASTM	C 309	"Standard Specification for Liquid Membrane-Forming Compounds for Curing Concrete"
ASTM	C 321	"Standard Test Method for Bond Strength of Chemical-Resistant Mortars"
ASTM	C 496	"Standard Test Method for Splitting Tensile Strength of Cylindrical Concrete Specimens"
ASTM	C 531	"Standard Test Method for Linear Shrinkage and Coefficient of Thermal Expansion of Chemical-Resistant Mortars, Grouts, Monolithic Surfacing, and Polymer Concretes"

ASTM	C 579	"Standard Test Methods for Compressive Strength of Chemical-Resistant Mortars, Grouts, Monolithic Surfacing and Polymer Concretes"
ASTM	C 596	"Standard Test Method for Drying Shrinkage of Mortar Containing Hydraulic Cement"
ASTM	C 580	"Standard Test Method for Flexural Strength and Modulus of Elasticity of Chemical-Resistant Mortars, Grouts, Monolithic Surfacing, and Polymer Concretes"
ASTM	C 666	"Standard Test Method for Resistance of Concrete to Rapid Freezing and Thawing"
ASTM	C 882	"Standard Test Method for Bond Strength of Epoxy-Resin Systems Used With Concrete By Slant Shear"
ASTM	C 905	"Standard Test Methods for Apparent Density of Chemical-Resistant Mortars, Grouts, Monolithic Surfacing, and Polymer Concretes"
ASTM	D 543	"Resistance of Plastics to Chemical Reagents"
ASTM	D 638	"Tensile Properties of Plastics"
ASTM	D 695	"Compressive Properties of Rigid Plastics"
ASTM	D 790	"Flexural Properties of Unreinforced and Reinforced Plastics"
ASTM	D 1622	"Standard Test Method for Apparent Density of Rigid Cellular Plastics"
ASTM	D 1623	"Standard Test Method for Tensile And Tensile Adhesion Properties of Rigid Cellular Plastics"
ASTM	D 2126	"Standard Test Method for Response of Rigid Cellular Plastics to Thermal and Humid Aging"
ASTM	D 2584	"Volatile Matter Content"
ASTM	D 2842	Standard Test Method for Water Absorption of Rigid Cellular Plastics"
ASTM	D 3846	"Standard Test Method for In-Plane Shear Strength of Reinforced Plastics"

ASTM	D 4258	"Standard Practice for Surface Cleaning Concrete for Coating"
ASTM	D 4259	"Standard Practice for Abrading Concrete"
ASTM	D 4541	"Standard Test Method for Pull-Off Strength of Coatings Using Portable Adhesion Testers"
ASTM	D 4787	"Standard Practice for Continuity Verification of Liquid or Sheet Linings Applied to Concrete Substrates"
ACI	503	"Use of Epoxy Compounds with Concrete"
SSPC/ NACE	SP-13/ NACE 6	"Surface Preparation of Concrete"

37.03 DEFINITIONS

A. Coating Systems: includes surface description, surface preparation, required dry film thickness, and the number and application procedure of the prime and finish coatings. Systems are defined and identified in the article headed "Coating System Specification Sheets" in this Section of the Technical Specifications.

B. Field Coating: the application of the coating system in an existing manhole or structure.

C. Dry Film Thickness (DFT): the thickness of a fully cured coating or coating system.

D Wet Film Thickness (WFT): the thickness of a coating while wet.

E. Volatile Organic Content (VOC): the portion of a coating that is a compound of carbon, is photo chemically reactive, and evaporates during drying or curing, expressed in g/L or lbs/gal as defined in ASTM D3960.

F. Solvents: Those chemicals used to dilute the liquid coating either for thinning the coating or for cleanup.

G. Lead Containing: any coating that contains any detectable amount of lead.

H. Hard To Reach: areas that may not be accessible with spray equipment but can be reached by brush, mitt, or roller.

I. Inaccessible Areas: areas such as back-to-back angles, skip welds, and other areas that a brush, mitt, or roller cannot contact the surface.

J. Manhole Floor: the bench, channel and invert of the manhole containing the concrete/brick floor of a manhole generally shaped as a fillet to direct incoming flows to the outlet piping and to minimize solids buildup, the wall/bench joint, the shaped flow-ways within the bench, the bench/channel joint, and the invert which is the line of the lowest elevation along the bottom of the channel(s).

K. Manhole Wall: that part of the manhole extending from the bench/wall joint to the bottom of the cone/corbel.

L: Manhole Cone/Corbel: the reducing section which tapers concentrically or eccentrically from the top wall joint to the bottom of the chimney or the ring (frame) casting where there is no chimney.

M. Manhole Chimney: the narrow vertical section built from brick or concrete adjusting rings extending from the top of the cone/corbel to the bottom of the frame casting.

N. Leaks/ infiltration: presence of water, or indications of water, inside the manhole caused by subsurface water entering the manhole from the exterior through cracks, fractures, holes, broken seals, or other means.

O. Inflow: surface water generally entering into a manhole through or under the manhole cover, frame, frame seal, chimney wall, or at the cone/corbel chimney joint.

P. Void: as defined in ACI.

Q. pH: a measure of acidity and alkalinity.

R. Bug Holes: small regular or irregular cavities, not exceeding 15rnm in diameter, resulting from the entrapment of air bubbles of formed concrete during placement and compaction. Re-rounding shall not be permitted.

37.04 QUALIFICATIONS

A. The Contractor shall be certified and/or licensed by the coating system manufacturer(s) as an approved Applicator for the products referenced in this section.

B. The Applicator shall be the person responsible for the actual work, either as the foreman or the person actually applying the coating system.

37.05 SUBMITTALS

The Contractor shall submit the following to the Engineer

A. List of materials including coatings, repair materials, grouts, and blasting abrasive material proposed for use.

B. List of equipment and certification by the individual coating manufacturer that the application equipment is sufficient to adequately apply the coating.

C. For each coating system, provide the manufacturer's application guidelines including:
   1. Surface preparation guidelines.
   2. Primer type, where required.
   3. Maximum wet and dry thickness per coat.
   4. Minimum and maximum curing time between coats, and atmospheric conditions for each.
   5. Curing time before submergence in municipal wastewater.
   6. Thinner to be used with each coating.
   7. Ventilator requirements.
   8. Allowable application methods.
   9. Maximum storage life.
   10. Material safety data sheets.
   11 . Interpretation of batch code numbers.
   12. Minimum and maximum relative humidity requirements.
   13. Minimum and maximum surface temperature requirements.
   14. Minimum and maximum ambient temperature requirements.
   15. Manufacturer's recommended application procedure.

D. Shop Drawings for frame and cover castings.

E. Product Data for manhole cover inserts.

F. Provide information on planned surface preparation procedures including, when relevant. abrasive media, minimum water cleaning pressure and flow rate (e.g. 5000 psig @ 4 gpm) • nozzle types (e.g. zero degree rotating nozzle), etc. for coating systems specified. Surface preparation methods shall be based upon the conditions of the substrate and the requirements of the protective coating to be applied. Whichever method(s) are used, they shall be performed in a manner that provides a uniform, sound, clean neutralized surface. At the request of the Engineer, the Contractor shall test for adverse chemical conditions that may hinder overall product performance.

G. Maintenance of Traffic Plan including, but not limited to, specific dates that the Maintenance of Traffic Plan shall be in place.

H. Wastewater Bypass Pumping plan, where required.

I. List of all test equipment to be used, copies of the adhesive and equipment's instructions, adhesives, calibration procedures, MSDS sheets, and copies of all reference standards related to the test equipment.

37.06 QUALITY ASSURANCE/ QUALITY CONTROL

A. General
   1. Deviations from the manufacturer's printed instructions will not be allowed unless approved in writing by the Engineer.
   2. In the event of a discrepancy between the Contractor's, manufacturer's or City Inspector's testing equipment, all parties shall check equipment in question for proper function and calibration.

3. Where there is a conflict between the manufacturer's recommendations and these Technical Specifications, the manufacturer's recommendations shall govern.
4. Test equipment and procedures shall be the same throughout the Contract.
5. Quality Control: Contractor shall be responsible for the quality control of the coatings applied including surface preparation, testing, verifying access, dimensions, configuration, pipe connections, appurtenances, and details of each manhole prior to commencing any Work as well as remedial work to be completed as identified by inspection at the given check points.
6. Quality Assurance: City Inspector shall approve the Contractor's Work regarding surface preparation and quality control of the coatings applied. This documentation in no way relieves the Contractor of the responsibilities described under this Contract. The City Inspector may conduct tests on ambient conditions, pH and surface temperature, coating(s) applied, wet and dry film thickness, coating type coating batch numbers, and other tests.

B. QA/QC Check Points
1. pH Testing: Prior to surface preparation for cementitious coating application, measure and record pH of the manhole interior surface and other parameters as required by coating manufacturer to verify acceptable existing substrate conditions for application of the specified product and to document compliance with warranty requirements. After surface preparation and prior to coating system being applied to the interior of a manhole (excluding coatings to only the interior of a chimney), measure and record pH of the manhole interior surface in at least two locations as approved by the City Inspector. Adjust if required by the coating system manufacturer and per NACE 6/SSPC SP 13 Table 1 for severe service.
2. Concrete surface tensile strength: After surface preparation (including repair and resurfacing products) and prior to a polymer coating system being applied to the interior of a manhole (excluding coatings to only the interior of a chimney and spot type only repairs) measure and record the results of a minimum of two concrete surface tensile strength tests, without glue failures, per manhole at locations as directed by the City Inspector. Tests shall be per ASTM D4541 as modified herein. Utilize a 20 mm test dolly and portable pull-off adhesion tester. Document test failure mode. Failure of the dolly adhesive shall require retesting. If the concrete surface tensile strength is less than 200 psi (NACE 6/SSPC SP 13 Table 1 for light service) notify manufacturer and Engineer for approval before applying coating. (Destructive testing as defined herein shall be performed on the initial manhole coated with a particular coating system. After the initial test. 10% of the manholes coated may require testing as selected by the Engineer. Initial and additional testing required due to test failures shall be at the Contractor's expense.)
3. Wet Film Thickness (WFT): During coating system application, measure and record WFT of the coating in at least four locations in the manhole (one in a chimney) or as directed by the City Inspector. Use an industry standard WFT gage (ASTM D4414) designed for thick coatings. Minimum W FT thickness is specified for each product in the article headed "Coating System Specification Sheets" in this Section of the Technical Specifications.
4. Surface Moisture: After preliminary surface preparation and prior to a polymer coating system being applied to the interior of a manhole, measure and record surface moisture of the manhole interior surface in at least two locations per ASTM

D426 and use a DELMHORST ACCUSCAN moisture meter using a 0 to 100 relative scale.

5. Blotter Test: Upon start up of abrasive blasting, compressed air shall be checked daily for oil and water by blotter test per ASTM D4285.
6. Anchor Profile of Surface: After preliminary surface preparation and prior to coating application to the interior of a manhole (excluding coatings only for interior of a chimney) compare and record anchor profile by comparison to various grits of sandpaper.
7. Surface Preparation: Shall be accepted by the coating system manufacturer prior to the application of the coating system.
8. Ambient Conditions: Measure and record the test results for relative humidity, manhole wall surface temperature, dew point and ambient temperature to ensure compliance for materials applied.
9. Coating Adhesion: After polymer coating system application and cure, measure and record the results of a minimum of two adhesion tests, without glue failures, per manhole at locations within the manhole as directed by the City Inspector. Tests shall be per ASTM D4541 as modified herein. Utilize a 20 mm test dolly and portable pull-off adhesion tester. Document test failure mode, whether failure is within the substrate, failure is within the coating, or failure is at the coating/substrate interface. Failure of the dolly adhesive shall require retesting. If the testing damages the coating, spot repair the test location while following manufacturer's recommendations. Failure at the coating/substrate interface with less than 10% of substrate adhered to the coating and less than 100 psi pull-off strength, shall be deemed a coating system failure and the Contractor shall remove the coating to soundly adhered edges, re-perform surface preparation procedures, and recoat the failed surfaces, at the Contractor's expense. Low pull-off strength values <150 psi) may require additional testing/evaluation to determine potential adhesion defects at the sole discretion of the Engineer. (Destructive adhesion testing as defined herein shall be performed on the initial manhole coated with a particular coating system. After the initial test, 10% of the manholes coated may require testing as selected by the Engineer. Initial and additional testing required due to test failures shall be at the Contractor's expense.)
10. Holiday Testing: The finished polymer coating shall be inspected per ASTM D-4787 "Continuity Verification of Liquid or Sheet Linings Applied to Concrete Substrates", using high-voltage spark testing equipment with variable settings. Test voltage shall be set at an initial 100 volts per mil (4,000 volts per mm) of specified film thickness, and then increased as needed to compensate for relative conductivity of the concrete substrate by spark testing an induced holiday at furthest extension of test probe from grounding location. Once test voltage is determined, it shall be used throughout that area, and then re-determined again every time a new ground is made. Detected holidays shall be marked and repaired per coating manufacturer's recommendations. Contractor shall be responsible to provide necessary Holiday Testing equipment for final inspection. Pinhole testing shall be accomplished using a Tinker Razor Holiday Detector, San Gabriel, CA, Model AP/W or an Engineer approved equal model. A test voltage of 100 volts/mil is recommended. This test shall identify and allow for the repair of pinholes in order to ensure a continuous pinhole-free lining. (Testing shall only be required where full depth manhole coating is specified.)

11. Exfiltration Testing: If necessary or as required perform exfiltration testing according to the following guidelines: Manholes and wetwells 6 feet deep or less should see less than one (1) inch of loss in five (5) minutes. Manholes and wetwells greater than 6 feet depth use one (1) inch plus an additional one eight (1/8) inch per additional foot of depth.
12. Vacuum Testing: May be conducted per ASTM C1244-93 only after rehabilitated structure has cured for a minimum of seven (7) days.

37.07 CONTAINMENT AND SITE CONDITIONS

A. No grouting materials, solvents, chemicals, blasting media, or debris of any sort shall be allowed to be discharged to the wastewater collection system. Water from pressure washing (>100 psi) may be allowed to enter the system after any debris has settled, when it demonstrated to the satisfaction of the City Inspector that no debris will enter the collection system. Water applied at less than 100 psi and containing common, household strength detergents, which are used strictly for rinsing the interior surfaces of the structure, may be allowed into the system as long as no debris are washed into the system. All odors noticeable by the average person shall be confined to an area within 10 feet of the structure. The Contractor shall provide odor control equipment or methods so odors are confined and in conjunction with closed space entry or other safety requirements.

B. Provide environmental controls such as ventilators if the cure time of the coating is slowed by the presence of coating or solvent vapor, and heaters and/or dehumidification as necessary to meet coating application requirements.

C. Applicator shall conform to all local, state, and federal regulations including those set forth by OSHA, RCRA, and the EPA.

37.08 WARRANTY

The Contractor shall unconditionally guarantee all manhole rehabilitation Work in this Contract against defects of materials and workmanship for a period of 3 years under normal use, operation, and service in accordance with the requirements of the Supplemental General Conditions article headed "Guarantee Period".

The Contractor and cementitious coating manufacturer shall warrant all cementitious manhole coating Work in this Contract against defects of materials and workmanship for a period of 10 years under normal use, operation, and service. The Contractor shall provide all testing and prepare all required installation reports, warranty registration documentation, etc. and submit same to the coating manufacturer and Engineer on behalf of the City. The Contractor shall furnish a warranty certificate from the cementitious coating manufacturer indicating acceptance and commencement of the warranty period. The Contractor and coating manufacturer shall, within sixty (60) days of written notice thereof, propose an acceptable method and repair any defects (including all labor and materials) that may develop during the warranty period in a manner acceptable to the Engineer and at no cost to the City. Defects shall be defined as: visible leakage of groundwater into the manhole or separation of any part of the coating from the host manhole or coating interfacing joints.

37.09 MATERIALS

A. Coating Products: Pure calcium aluminate cementitious manhole coating systems shall be Product A or B. Reinforced polymer manhole coating system shall be Product C, D, E, F, G, or H. Approved equal must be submitted for review and approval by the Engineer and City prior to bid.

B. Repair and Resurfacing Products: Repair materials must be compatible with specified manhole coating products and selected to minimize curing time. The following products may be accepted and approved as compatible:

1. Deneef AC 40, Avanti AV 100, or approved equal pressure grout for infiltration elimination.
2. 100% solids, solvent free epoxy grout specifically formulated to be suitable for top coating with the specified coating product(s}.
3. Factory blended, rapid setting, high early strength, fiber reinforced, non-shrink repair mortar that can be troweled or pneumatically spray applied, and specifically formulated to be suitable for top coating with the specified coating product(s}.
4. Products specifically designed for thin (1/4-inch or less) applications shall be used for channels needing to be raised to match or transition with CIPP (cured-in-place pipe) liners. Product shall be SikaTop 123 PLUS, or approved equal. Where manholes with CIPP liners are scheduled to receive a coating, any channel repair materials shall be as recommended by the specific coating manufacturer.

C. Brick Masonry and Precast Concrete Grade Adjustment Rings

1. Bricks shall be new, first quality, sound, hard, uniformly burned, regular and uniform in shape and size. Under burned or salmon brick shall not be acceptable. Only whole brick shall be used. Bricks shall conform to ASTM C32, Grade SS.
2. Precast concrete grade adjustment rings shall conform to the requirements of ASTM C 478. Precast adjustment rings shall not be less than 2 inches thick or be of multiple piece construction. To accommodate steep surface grades, non-uniform precast grade adjustment rings may be manufactured to 2 inches thick on one side and 3 inches thick on the opposite side.
3. Precast concrete grade adjustment rings shall provide structural capacity equal to or greater than the existing or specified manhole frame casting and shall not affect the opening size or surface appearance.
4. Mortar shall be factory blended, rapid setting, high early strength, fiber reinforced, non-metallic, chloride free, non-shrink or low-shrink repair mortar that can be troweled.

D. Frame and Cover Castings

1. Grey Iron castings shall conform to the requirements of ASTM A48 Class 35 B, unless otherwise specified, and be designed for HS-20 load rating.
2. Castings shall be manufactured true to pattern, and component parts shall fit together in a satisfactory manner. They shall be smooth and well cleaned by shot blasting. Circular manhole frame and cover castings shall be furnished with machined horizontal bearing surfaces. Frame and cover castings of the same nominal size shall be interchangeable.

E. Internal Chimney Sealant
1. The chimney sealant shall be minimum 100 mils thick of corrosion resistant aromatic flexible urethane resin coating applied to the inside wall of the chimney and manhole frame casting. The product shall have a minimum elongation of 800% and a Durometer of 75. The seal shall remain flexible allowing repeated vertical or horizontal movements of the manhole frame due to frost lift, ground movement or the thermal movement of pavements.
2. The chimney sealant shall have a minimum tensile and adhesion strength of 1150 PSI and 175 lb. per linear inch respectively. The chimney sealing system shall conform to the physical requirements of ASTM 0412. The chimney sealant shall be Flex-Seal Utility Sealant as manufactured by Sealing Systems. Inc. or approved equal.

F. Manhole Cover Insert
1. The insert body shall be manufactured of 304 stainless steel with a minimum thickness of 18 gauge. The insert shall have a deep-dish bowl design to allow for easy removal of the manhole cover. The insert shall be designed to provide a sufficiently loose fit in the manhole frame casting to allow for easy removal.
2. The insert body gasket shall seal against the frame casting, be made of closed cell neoprene, and affixed to the insert body with a pressure-sensitive adhesive. The gasket shall have a minimum thickness of 1/8 inch and be installed by the manufacturer.
3. The insert body shall have a handle made 3/16" plastic coated 304 stainless steel cable installed on the side of the bowl and attached with two 304 stainless steel round head bolts with flat washers and self-locking nuts.
4. The manhole cover insert and components shall be manufactured of materials resistant to corrosion from atmospheres containing hydrogen sulfide and dilute sulfuric acid. The manhole cover insert shall be InflowShield as manufactured by Inflow Systems, Inc. or approved equal.

G. Standardization: Materials, supplies, and articles provided shall be the standard products of the manufacturers and coating system specified. Coatings in a particular system shall be the products of a single manufacturer.

H. Delivery, Storage and Handling: Deliver materials for field application to the job site in their original, unopened, undamaged containers. Each container shall bear the manufacturers name brand, batch number, date of manufacture, and storage life. Coatings shall be stored in enclosed structures and shall be protected from weather, excessive high or low temperatures, and spills. Coatings exceeding storage life recommended by the manufacturer or that have been visibly damaged shall be removed from the site. Coating materials are to be stored and handled in accordance with their material safety data sheets.

37.10 REPAIR & PREPARATION

A. Repair of Bench and Channel: Manhole bench, flow channels, and inverts shall be repaired and/or constructed as directed to provide smooth flow characteristics and transition of flow through the manhole.

1. Contractor shall prepare, clean, and repair/rebuild manhole bench and flow channel(s) in the same manner as described above. Remove obstructions and loose materials from bench prior to shaping the channel and invert. Using brick and repair/resurfacing mortar, form a smooth, U-shaped channel having a minimum depth of one-half pipe diameter across the floor of the manhole using approved manhole rehabilitation materials. The top edge of the bench at the manhole wall shall be set at an elevation above one-half diameter of the adjacent pipe(s) and sloped at 1-inch per foot to drain toward the flow-through channel and outgoing pipe, and to intersect the channel edge at the one-half diameter level. Active flow shall be diverted as required to allow sufficient setting time for material used.
2. Form a smooth transition with a reshaped channel invert and a raised manhole bench to eliminate sharp edges on the pipe, bench, channel, or invert. Build up and smooth the invert of manhole to match flow line of the connecting pipes. Channel build-up and surface preparation for manholes to be coated shall be in accordance with the section headed "General Coating Preparation" in this Section of the Technical Specifications.
3. Finished benches, channels and inverts shall be smooth and without defects which would allow for accumulation of debris. Finished benches, channels and inverts shall conform to the Contract Documents.

B. Repair/Replacement of Chimney and Frame and Cover Casting

1. Frame and Cover Casting: Frame and cover castings shall be replaced with Contractor or City furnished frame and covers, as directed. Frame and cover replacement varies according to manhole type and shall be performed in accordance with the requirements of the Contract Documents. The existing castings shall be salvaged and delivered to the designated location.
2. Chimney: Manholes that have defective chimneys, frames and/or covers, or covers below grade will be designated for adjustment or replacement of the frame and cover. The Work shall include the following:
    a. Saw cut and remove existing asphaltic or concrete pavement. Existing brick or paver stone pavement shall be carefully removed without cutting and salvaged for reuse. Excavate to at least 6 inches below the bottom of the chimney replacement.
    b. Remove the existing manhole frame and cover casting, salvage and reuse the existing casting where adjustment is required, or deliver the salvaged casting to the designated location where replacement is required. Frames broken during removal or handling by the Contractor shall be replaced at the Contractor's expense.
    c. Remove loose, cracked, broken, deteriorated, deficient or otherwise unsound existing chimney materials as required or directed by the Engineer. Existing Portland cement brick shall be removed and replaced regardless of condition. Where existing frame and cover castings are being replaced with a larger frame and cover casting, the existing chimney/corbel shall be removed and replaced as required to provide a chimney that matches the opening of the larger replacement frame casting. Existing surfaces shall be cleaned and prepared for chimney replacement.
    d. The top of the cone shall be set between two and one-half inches and fourteen and one-half (14 1/2) inches below the bottom of the manhole cover

frame. It is the intent of the specifications to provide a minimum of two and one-half inches to accommodate future grade changes without disturbing the manhole. Where the distance between the bottom of the manhole cover frame and the top of the cone is greater than fourteen and one-half (14 1/2) inches, 12-inch riser units shall be used to bring the top of the cone to within the limits specified.

e. Replace existing chimney with new specified materials. The elevation and horizontal position of the frame shall be adjusted as necessary by installing precast grade adjustment rings or a sufficient number of brick and mortar rows to obtain the desired elevation. The frame and cover elevation and cross slope shall match the existing adjacent pavement. The frame and cover elevation shall be minimum 1 inch above existing grade in unpaved areas, or higher as directed by the Engineer. No materials other than the prepared mortar bed shall be used to obtain final elevation and slope of the frame. The prepared mortar bed shall be minimum 1/2 inch thick.

f. Backfill the excavation and restore surfaces to a condition equal or better than the existing condition prior to construction, in accordance with the requirements of the Contract Documents.

C. Elimination of Infiltration: Infiltration shall be considered as "Minor" or "Severe". (1) "Minor" infiltration consists of water penetration of the manhole structure, appearing as a wet stain or a minute flow (trickle) of water on the interior surface of the manhole. (2) "Severe" infiltration consists of multiple leaks penetrating an area or of single leaks that spray into the interior of the manhole which require drilling through the manhole structure and pumping grout by the use of pressurized injection grouting equipment to stop active leaks. Contractor shall ensure that all visible leaks are eliminated in accordance with the Contract Documents and the coating manufacturer's material recommendations prior to surface preparation and coating application.

1. "Minor" infiltration: If observed within the manhole structure after surface preparation is complete, the area shall be prepared and a product specifically formulated for infiltration control and recommended by the specified manhole coating manufacturer(s) shall be used to stop minor infiltration flows in accordance with the product manufacturer's guidelines.
2. "Severe" infiltration: Requires manhole drilling and pressure grouting. The products used for pressure grouting shall be installed in accordance with the manufacturer's guidelines. Substitute materials shall meet manhole coating manufacturer's recommendations for the particular manhole coating system specified.
    a. Manhole grouting shall only be performed where approved and after associated Work such as CIPP lining.
    b. Chemical grouting shall be performed beginning at the bottom of the manhole and continue up as required to seal all points of severe infiltration.
    c. Grouting, once commenced, shall be completed without stoppage. In case of equipment breakdown, wash out grouting system sufficiently to ensure fresh grout and adequate bond and penetration will occur upon restart. Maintain grout pressure until grout has set.
    d. Grout travel shall be verified by migration of grout to defects or adjacent injection holes.
    e. Injection holes shall be cleaned and patched with waterproof quick setting

mortar as recommended by grout manufacturer.

D. General Coating Preparation

1. Surfaces to be coated shall be cleaned and prepared per the coating manufacturer's recommendations or per International Concrete Repair Institute (ICRI) Guideline Number 03732, whichever is more rigorous. Before applying coating, all contaminants including wastewater, oil, grease, dirt, rust, loose mill scale, waxes, efflorescence, sealers, salts, old coatings, and other foreign substances shall be removed. Oil and grease shall be removed before mechanical cleaning (hydro-blasting) is started. Where mechanical cleaning is accomplished by abrasive blast cleaning, the abrasive used shall be washed, graded and free of contaminates which might interfere with the adhesion of the coating. Steam cleaning, detergent, industrial degreasers, and/or hot water shall be used to clean wall surfaces unless this is contrary to the recommendations of the specific coating system manufacturer. Acid solutions shall not be used.
2. As necessary, wastewater flow shall be stopped, bypassed or diverted for the preparation and application of the coating product{s).
3. Contractor shall prepare, clean, and seal all manhole wall penetrations in accordance with coating manufacturer's recommendations and as approved by the Engineer. Bench, channel, invert, chimney, and frame and cover casting repairs and/or replacements shall be completed before coatings are applied.
4. During surface preparation and coatings application, all nearby equipment, vehicles, structures, etc. shall be protected from blasting grit, dust and over sprayed, dropped or spilled materials. Surfaces adjacent to a proposed leading edge of coating application shall be taped-off or otherwise protected.
5. Clean cloths and clean fluids shall be used in solvent cleaning.
6. Contractor shall inspect all surfaces specified to receive a protective coating prior to surface preparation. Contractor shall notify Engineer of any noticeable disparity in the surfaces which may interfere with the proper preparation or application of the repair mortar and coating. Surface profile created by mechanical cleaning shall be per the coating manufacturer's recommendations.
7. Damaged surfaces shall be observed by the City Inspector before repairs are made. Where concrete or brick deterioration in a manhole structure is severe, structural integrity may need to be restored prior to application of coating, at Engineer's approval.
8. All active infiltration must be eliminated prior to proposed repair with materials as recommended by the coating manufacturer.
9. Plug or place covers over all pipe openings to prevent extraneous material from entering the wastewater system.

E. Surface Preparation of Concrete and Masonry Surfaces

1. Concrete: prepare per SSPC SP13/NACE 6 "Surface Preparation for Concrete," and the coating manufacturer's recommendations. All leaks evidenced by indications of infiltration, shall be plugged with materials as recommended by coating manufacturer. Surface profile created by abrasive blasted surfaces shall be per the manufacturer's recommendation for the coating system.
2. Brick Manhole: prepare per the coating manufacturer's recommendations. Contractor shall remove all oil, grease, chemicals and paints or protective coatings

by chemical cleaning prior to hydro-blasting or abrasive blasting. All foreign particles and attacked or unsound mortar shall be removed from the joints. All leaks evidenced by indications of infiltration, shall be plugged with materials as recommended by coating manufacturer. Loose brickwork and voids in the mortar joints shall be re-grouted with repair materials to provide a void free smooth surface for coating application.

3. Loose or protruding brick, mortar and concrete shall be removed by using a mason's hammer and chisel. The surface to be repaired must be clean and free of any loose materials.
4. Repair products shall be used to fill bugholes, holes, honeycombs, for patching of deep craters, voids or spalled areas of concrete, and/or smoothing transitions between components prior to coating installation. Products used must be compatible with the specified coating system(s) and used/applied in accordance with the repair product manufacturer's recommendations. Materials used shall be recommended by the coating system manufacturer.
5. Resurfacing/repair products shall be mixed, applied, allowed to cure, and treated per their manufacturer's recommendations, before they are coated. The Contractor shall ensure that resurfacing/repair and/or patching materials are fully cured before final surface preparation or coating application. The Contractor shall follow manufacturer's cure schedule before over coating.
6. Surfaces which are to be coated shall be allowed to dry to the moisture content recommended by the coating manufacturer.

F. Coating Interface with Adjoining Construction Materials

1. Coating product(s) shall interface with adjoining construction materials throughout the manhole structure to effectively seal and protect concrete or masonry substrates from infiltration and attack by corrosive elements. Procedures and materials necessary to affect this interface shall be as recommended by the coating product(s) manufacturer and approved by the Engineer. Termination points of the polymer coating product(s) shall have a minimum three (3) inch interface overlap with each pipe penetration. Termination points of the cementitious coating product(s) shall have flush interface abutting each pipe penetration. Wastewater flow shall be stopped, bypassed or diverted for the preparation and application of the coating product(s) to the invert and interface with pipe materials.
2. CIPP Liners: Polymer manhole coatings shall be chemically compatible with and have the ability to bond with the external or internal (with required surface preparation) surface of CIPP liners. Where manholes are coated in conjunction with CIPP lining activities by others, coating shall take place after pipe lining and utilize the existing wastewater Bypass Pumping setup where possible. Resurfacing/repair products shall be selected to minimize curing time. Manhole surface preparation and repair materials prior to coating shall be placed within the invert, channel, and benches at proper depth to allow for proper coating thickness, interface matching with CIPP profile, and minimum three (3) inch overlap of polymer coatings with CIPP terminal edges (internally or externally) in the invert, channel, benches, and remaining areas. The coating shall be monolithic with piping and manhole components. The CIPP surface to be interfaced with and overlapped with polymer coatings shall be clean and remain protected prior to coating. Surface preparation of internal CIPP surfaces shall require wire brushing or other approved means prior to coating to ensure bonding.

G. Final Cleaning: The Contractor shall ensure that all surfaces to be coated are free of dust, moisture, and condensation. Nearby surfaces shall be cleaned to prevent contamination of substrate or freshly applied coatings.

H. Internal Chimney Sealant Application
1. All loose and protruding mortar and brick that would interfere with the seal's performance shall be removed and the manhole frame casting, chimney and cone/corbel cleaned by wire brushing. Prepare the surface as required by the manufacturer.
2. Active infiltration shall be corrected in accordance with the requirements of the section headed "Elimination of Infiltration" in this Section of the Technical Specifications prior to installing the internal chimney sealant. Resurfacing/repair products shall be completely cured in accordance with the manufacturer's requirements prior to installing the internal chimney sealant. The substrate surface must be free of sand, loose debris, dust, dirt, oil, grease or chemical contamination. A blower may be required to completely dry the substrate surface as recommended by the manufacturer.
3. Ensure the frame casting and structure is clean and dry prior to applying the adhesive primer. Brush the adhesive primer onto the casting and structure surfaces where the sealant is intended to adhere, in accordance with the requirements of the manufacturer.
4. The chimney sealant shall be evenly brush applied to the required thickness after the adhesive primer has dried, in accordance with the requirements of the manufacturer.
5. The chimney sealant shall be applied and extend vertically from 1-inch above the frame seal to 2-inches below the chimney and cone/corbel joint. The chimney sealant shall be applied and extend vertically from 1-inch above the frame seal to 12-inches below the frame seal for brick manholes where the frame is installed directly on the cone/corbel.

I. Manhole Cover Insert Installation
1. The Contractor shall accurately measure the existing frame and cover casting prior to ordering the manhole cover insert.
2. The manhole frame casting seat shall be free of all dirt, debris, rust and scale prior to the installation of the manhole cover insert. The insert shall be fully seated around the frame casting seat to ensure against water seepage between the insert and frame casting, and as recommended by the manufacturer.

37.11 COATING MATERIAL APPLICATION

A. Workmanship: Coating shall be conducted in accordance with the requirements of SSPC, Good Painting Practice, Volume 1.
1. Coated surfaces shall be free from significant runs, drips, ridges, waves, laps and brush marks, etc. Coats shall be applied so as to produce an even film of uniform thickness.
2. Coating equipment shall be designed for application of the materials specified.
   a. Compressors shall have traps and filters to remove water and oils.
   b. Spray equipment shall be equipped with mechanical agitators, pressure gages, and pressure regulators, and spray nozzles of the proper sizes and functioning in a manner suitable to perform the work.
   c. The spray equipment shall be specifically designed to accurately ratio and apply the specified protective coating materials and shall be regularly maintained and in proper working order. Spray application equipment must be approved by the coating manufacturer and shall be used to apply each coat of the protective coating.
3. Each coat shall be applied evenly and sharply cut to line.

B. Coating Properties, Mixing, and Thinning

1. Coating shall provide a monolithic film with coverage of all specified surfaces and interfacing joints. Undercoats shall be sanded as required to provide a surface suitable for the proper application and adhesion of subsequent coats. Coating shall be thoroughly stirred, strained, and kept at a uniform consistency during application.
2. Coatings shall be mixed in accordance with the manufacturer's instructions.
3. Clean, potable water shall be used for mixing and accurately metering to the prescribed amount for each batch of the lining system

C. Method of Coating Application

1. Observe OSHA Safety Guidelines when entering Confined Space working areas
2. Where two or more coats are required, all coats shall be WFT tested.
3. Coating shall not be applied to a surface until it has been prepared as specified and approved for coating by the manufacturer.
4. Action shall be taken to prevent rebound material from entering active sewer lines

D. Film Thickness and Continuity

1. Coating system thickness is the total thickness of primer and finish coats. Coatings shall be applied to the thickness specified.
2. Overspray, pinholes and other surface defects shall be repaired.

37.12 COATING SYSTEM SPECIFICATION SHEETS

Coating Systems specified for use appear on the following pages.

Product A

Manufacturer:	Kerneos Inc., 1316 Priority Lane, Chesapeake, VA-1-877-KERNEOS, 757-284-3200 or FAX 757-284-3300.
Product Name:	SewperCoat PG
Qualifications:	Applicator shall be trained and certified by the manufacturer as qualified to apply the specified coating. Applicator qualifications are addressed under item 12 of the Proposal Questionnaire. Provide references and documentation of certification and experience with submittals.
Material Classification:	Pre-packaged 100% calcium aluminate fiber reinforced cementitious monolithic coating composed of pure fused calcium aluminate cement and manufactured calcium aluminate aggregate (no other aggregate material permitted), and is resistant to biosulfuric acid attack. Chemical composition of the calcium aluminate cement and aggregate portion: Al_20_3= 39 - 44%, CaO = 34 - 38%, $FeO+Fe_20_3$ = 9 - 15%, $Si0_2$=6 - 8%.
Surfaces:	Field applied to existing manholes. Coat all of interior of existing concrete, brick, and block manholes, including channels, and interfacing pipe joints.
Color:	Gray
Compressive Strength:	>7,000 psi @ 28 Days per ASTM C1 09
Tensile Strength:	>700 psi @ 28 Days per ASTM C496
Flexural Strength:	> 1,300 psi @ 28 Days per ASTM C348
Shrinkage @ 90% RH:	<0.07% @ 28 Days per ASTM C596
Bond:	>2,500 psi @ 28 Days per ASTM C882

Freeze-Thaw:	No visible damage after 300 cycles per ASTM C666
Density:	Per manufacturer
Service Condition:	Immersed, non-immersed, domestic wastewater corrosive environment.
Surface Preparation:	Per the International Concrete Repair Institute (ICRI) Guideline No. 03732 and the section headed "Preparation" in this Section of the Technical Specifications. Inject or hand pack grout to seal holes, leaks and seeping. Prepared surface shall be thoroughly moistened with water prior to the application. Do not apply to surfaces with running water.
Repair Materials:	Patching grout, infiltration control grout, and any other repair materials shall comply with the recommendations of the manufacturer. No holes or honeycomb surfaces should remain after the application of the repair mortar. Materials shall be fully cured before coating is applied.
Environmental Controls:	Minimum air temperature 40 degrees F and do not expose to rain or snow. Maximum mix temperature 90 degrees F at time of application. Provide ventilation as recommended by manufacturer. Provide wastewater bypass as necessary
Application:	Field application by "wet-shotcrete" method typically with a low-pressure progressive cavity (rotor/stator) type pump that is clean and free of any Portland cement residue. Only unopened manufacturer pre-packaged material permitted for use and mixed with clean potable water per manufacturer's recommendation. Applied by trained technician who is experienced in the application of spray applied cementitious coatings and has been certified by the manufacturer. Coating shall be applied within 24 hours of completion of surface preparation. The finished bench surfaces shall be smooth, free of ridges and will be sloped in the direction of flow. Special care shall be used to ensure a smooth transition between the new manhole invert and intersecting pipe inverts such that flow will not be impaired. Manufacturer to certify equipment proposed for use by Contractor.
Curing:	Per manufacturer's recommendations and minimum 18 hours moist curing. Curing compound, if required, shall meet the requirements of ASTM C309 and be approved by the lining material manufacturer and the Engineer prior to use. Minimum 6 hours curing prior to contact or immersion with flowing wastewater
Thickness:	Minimum of 1/2 inch DFT
Tolerances:	Minus 0 inches.
Cleanup:	Water
Inspection Check Points:	See the subsection headed "Quality Assurance/Quality Control" in this Section of the Technical Specifications. Check Points 1 through 10.

Product B

Manufacturer:	The Strong Company, Inc., 4505 Emmett Sanders Road, Pine Bluff, AR -1-800-982-8009 or FAX 870-850-6933.
Product Name:	High Performance Mix
Qualifications:	Applicator shall be trained and certified by the manufacturer as qualified to apply the specified coating. Applicator qualifications are addressed under item 12 of the Proposal Questionnaire. Provide references and documentation of certification and experience with submittals.
Material Classification:	Pre-packaged 100% calcium aluminate fiber reinforced cementitious monolithic coating composed of pure fused calcium aluminate cement and

	manufactured calcium aluminate aggregate (no other aggregate material permitted) and is resistant to biosulfuric acid attack. Chemical composition of the calcium aluminate cement and aggregate portion: Al_20 3::: 39 44%, CaO ::: 34 - 38%, $FeO+Fe_20_3$ ::: 9 - 15%, $Si0_2$::: 6 - 8%.
Surfaces:	Field applied to existing manholes. Coat all of interior of existing concrete, brick, and block manholes, including channels, and interfacing pipe joints.
Color:	Gray
Compressive Strength:	>9,000 psi @ 28 Days per ASTM C109
Tensile Strength:	>800 psi @ 28 Days per ASTM C496
Flexural Strength:	>1,300 psi @ 28 Days per ASTM C293
Shrinkage @ 90% RH:	0% @ 28 Days per ASTM C596
Bond:	>3,000 psi @ 28 Days per ASTM C882
Freeze-Thaw:	No visible damage after 300 cycles per ASTM C666
Density:	Per manufacturer.
Service Condition:	Immersed, non-immersed, domestic wastewater corrosive environment.
Surface Preparation:	Per the International Concrete Repair Institute (ICRI) Guideline No. 03732 and the section headed "Preparation" in this Section of the Technical Specifications. Inject or hand pack grout to seal holes, leaks and seeping. Prepared surface shall be thoroughly moistened with water prior to the application. Do not apply to surfaces with running water.
Repair Materials:	Patching grout, infiltration control grout, and any other repair materials shall comply with the recommendations of the manufacturer. No holes or honeycomb surfaces should remain after the application of the repair mortar. Materials shall be fully cured before coating is applied.
Environmental Controls:	Minimum air temperature 40 degrees F and do not expose to rain or snow. Maximum mix temperature 90 degrees F at time of application. Provide ventilation as recommended by manufacturer. Provide wastewater bypass as necessary.
Application:	Field application by "wet-shotcrete" method typically with a low-pressure progressive cavity (rotor/stator) type pump that is clean and free of any Portland cement residue. Only unopened manufacturer pre-packaged material permitted for use and mixed with clean potable water per manufacturer's recommendation. Applied by trained technician who is experienced in the application of spray applied cementitious coatings and has been certified by the manufacturer. Coating shall be applied within 24 hours of completion of surface preparation. The finished bench surfaces shall be smooth, free of ridges and will be sloped in the direction of flow. Special care shall be used to ensure a smooth transition between the new manhole invert and intersecting pipe inverts such that flow will not be impaired. Manufacturer to certify equipment proposed for use by Contractor.
Curing:	Per manufacturer's recommendations and minimum 18 hours moist curing. Curing compound, if required, shall meet the requirements of ASTM C309 and be approved by the lining material manufacturer and the Engineer prior to use. Minimum 6 hours curing prior to contact or immersion with flowing wastewater.
Thickness:	Minimum of 1/2 inch DFT
Tolerances:	Minus 0 inches.
Cleanup:	Water
Inspection Check Points:	See the subsection headed "Quality Assurance/Quality Control" in this Section of the Technical Specifications. Check Points 1 through 10.

Product C

Manufacturer:	Protective Liner Systems, Inc. 7625 Mall Parkway, Lithonia, GA 30038. P.O. Box 921, Lithonia, GA 30058. (770) 482-5201, (770) 861-9965.
Product Name:	PLS-650 PerpetuWall Liner System. (PLS-613, PLS-614, PLS-700 and PLS-618)
Qualifications:	Applicator shall be trained and certified by the manufacturer as qualified to apply the specified coating. Applicator qualifications are addressed under item 12 of the Proposal Questionnaire. Provide references and documentation of certification and experience with submittals.
Material Classification:	Fiberglass-reinforced modified epoxy resin monolithic coating system. 100% solids bisphenol A epoxy resin with polyamide curing agent. Materials per ASTM D638-Test Method for Tensile Properties of Plastics, and ASTM D790-Test Methods for Flexural Properties of Unreinforced and Reinforced Plastics and Electrical Insulating Materials.
Surfaces:	Field applied to existing manholes. Coat all of interior of existing concrete, brick, and block manholes, including channels and interfacing pipe joints.
Color:	Light gray
Compressive Strength:	16,800 psi per ASTM D695
Tensile Strength:	12,400 psi per ASTM D638
Flexural Strength:	13,900 psi per ASTM D790
Shrinkage @ 90% RH:	500,000 psi per ASTM D790
Bond:	Shall exceed tensile strength of substrate
Low-Temp. Flexibility:	Per manufacturer, per ASTM D1790
Density:	Per manufacturer.
Service Condition:	Immersed, non-potable, non-immersed, domestic wastewater, corrosive environment, interior and exterior water pressure, traffic areas.
Surface Preparation:	Per the section headed "Preparation" in this Section of the Technical Specifications. In addition, galvanized steel and aluminum may require etching. Inject or hand pack grout to seal holes, leaks and seeping. Can be applied to wet or dry surface. do not apply to surfaces with active infiltration or running water.
Repair Materials:	Patching grout, infiltration control grout, and any other repair materials shall comply with the recommendations of the manufacturer. No holes or honeycomb surfaces should remain after the application of the repair mortar. Materials shall be fully cured before coating is applied.
Environmental Controls:	Provide heaters, dehumidification, and ventilation as recommended by manufacturer and as needed. Provide wastewater bypass as necessary.
Design:	Shall be designed to withstand the hydraulic load generated by the groundwater table. The invert and bench coating thickness shall be the same as that required at the bottom of the manhole wall as determined by the manufacturer's standard engineering calculations for groundwater pressure. Coating thickness design to be based on the groundwater table being one foot below the ground surface. Testing required for design values of the flexural modulus of the coating will be verified by a third-party independent testing lab paid for by the Contractor. The test results and design information for each individual structure shall be submitted to the Engineer for review.
Application:	Field application of PLS-613 or PLS-614 depending on temperature and conditions of application by trained technician who has been certified by the

	manufacturer. PLS-613 can be hand applied by brush, roller or trowel on dry or wet surface. PLS-614 is applied by trowel on dry or wet surface. Coating shall be applied within 24 hours of completion of surface preparation. Coating steps: (1) Begin with an approximate WFT of 100 mils (2) fiberglass fabric cut and pressed into epoxy mastic to full wet-out (3) adjacent applications of fabric edges to be overlapped or butt-jointed (4) fabric top coated with epoxy PLS-613 or PLS-614. Additional coats can be applied in 2-3 hours, but no later than 24 hrs. The finished bench surfaces shall be smooth, free of ridges and will be sloped in the direction of flow. Special care shall be used to ensure a smooth transition between the new manhole invert and intersecting pipe inverts such that flow will not be impaired. Manufacturer to certify equipment proposed for use by Contractor.
Curing:	Coating will cure in 3-4 hours at 70 degrees F to approximately 75% of their strength, after which time may be subjected to active flow. Maximum physical properties achieved in 4-5 days. Higher temperatures will reduce these requirements.
Thickness:	Per manufacturer's design. 125 mils minimum thickness.
Tolerances:	Plus 20 mils or minus 10 mils.
Cleanup:	Clean equipment with Xylene or lacquer thinner. Clean hands with denatured alcohol or Go-Jo type hand cleaner. Dispose of solvent and debris as required by code.
Inspection Check Points:	See the subsection headed "Quality Assurance/Quality Control" in this Section of the Technical Specifications. Check Points 1 through 10.

Product D

Manufacturer:	International Paint LLC; 6001 Antoine Drive, Houston TX 77091 (713) 682-1711
Product Name:	Enviroline 222
Qualifications:	Contractor/applicator trained in the application of high-performance industrial lining systems
Material Classification:	Epoxy novolac
Surfaces:	Carbon steel, stainless steel, concrete; substrate preparation and application in accordance with Manufacturer Data Sheet and Application Guidelines
Color:	Green, Gray
Compressive Strength:	ASTM D695 @ 40 mils TDFT: 72MPa
Tensile Strength:	ASTM D638 @ 40 mils TDFT: 38MPa
Flexural Strength:	ASTM D790 @ 40 mils TDFT: 66MPa
Shrinkage @ 90% RH:	N/A
Bond:	1700 psi on steel, exceeds tensile strength of concrete
Low-Temp. Flexibility:	N/A
Density:	11.4 lbs/gal (1.62 g/cm) / ASTM D1475
Service Condition:	Immersion or secondary containment of wastewater infrastructure, non-potable water and chemicals
Surface Preparation:	Substrate preparation in accordance with Manufacturer Data Sheet and Application Guidelines
Repair Materials:	Intercrete 4801, 4802 & 4820, for topcoat epoxy repair: Enviroline 222 and depending on service, Enviroline 124
Environmental Controls:	Substrate preparation and application in accordance with Manufacturer

	Data Sheet and Application Guidelines
Application:	Application in accordance with Manufacturer Data Sheet and Application Guidelines
Curing:	8 hours at 77° F.
Thickness:	20-100 mils TDFT
Tolerances:	SSPC-PA 2 Level 3
Cleanup:	Enviroline 71C
Abrasion Resistance	ASTM 4060 average of 41.4 mg weight loss per 1000 cycles, CS17 wheel with 1kg loading
Severe Wastewater Analysis Test (ASTM G210)	ASTM G210 Performed well in Severe Wastewater Analysis Test
Inspection Check Points:	See the subsection headed "Quality Assurance/Quality Control" in this Section of the Technical Specifications. Check Points 1 through 10.

Product E

Manufacturer:	Tnemec Company, Inc. 123 West 23rd Ave, North Kansas City, MO, 64116 Phone: 1-816-483-3400 Represented locally by Florida Protective Coatings Services Office Phone: (407) 322 – 1243 Local Representative (Chad Holmes) Phone: (727) 201 – 6706
Product Name:	Tnemec Perma-Shield Series 435 Perma-Glaze
Qualifications:	Applicator must have a minimum NACE level 1 on staff and have a minimum 5 completed projects of similar size & complexity to this work with the use of Tnemec coatings. Applicator must meet all other requirements of the municipality.
Material Classification:	Micro-Fiber Reinforced, Modified Polyamine Epoxy
Surfaces:	Field applied to existing manholes. Coat all of interior of existing concrete, brick, and block manholes, including channels and interfacing pipe joints.
Color:	Gray or Beige
Compressive Strength:	No Less than 9,427 (65.0 MPa) compressive strength, average of five tests.
Tensile Strength:	No less than 3,231 psi (22.28 MPa) tensile strength.
Tensile Modulus of Elasticity (ASTM D2370)	No less than 241,368 psi (1664.17 MPa) tensile modulus of elasticity.
Service Condition:	**Non-potable, anaerobic wastewater environments with mild H_2S concentrations (Immersion & Headspace).**
Surface Preparation:	Abrasive blast or mechanically abrade in accordance with SSPC-SP13/NACE No. 6 to remove all existing coatings and provide a minimum ICRI CSP 5 surface profile. Surface must be clean, dry, and contaminant-free prior to coating.
Repair Materials:	Tnemec Series 218 at a nominal 1/8” and as needed to bring surfaces to level. Series 217 may also be used for deeper repairs (See Application Guide for details).
Environmental Controls:	Substrate temperature should be at least 5°F above the dew point. Refer to manufacturer’s latest written recommendations for additional guidance.
Application:	Refer to product data sheet and Series 435 Application Guide for latest storage, equipment, and application recommendations. Refer to Tnemec’s Perma-Shield Details Guide for construction details

Curing:	Maximum recoat window is 7 days. Cure for 2 days (at 75°F) prior to placing into service.
Thickness:	30.0 – 40.0 mils in one or two coats.
Cleanup:	Tnemec's #4 thinner or MEK.
Abrasion Resistance	No more than 72 mg loss after 1,000 cycles, average of three tests
Severe Wastewater Analysis Test (ASTM G210)	Initial impedance of 12.46 log-Z at 0.01 Hz (ohms cm²). No blistering, cracking, checking or delamination. No less than 84.3% retention and no more than 1.95 ohms cm² reduction in electrochemical impedance after 28 days exposure. No less than 93% loss of tensile adhesion after 28 days in S.W.A.T. average of three tests.
Inspection Check Points:	See the subsection headed "Quality Assurance/Quality Control" in this Section of the Technical Specifications. Check Points 1 through 10.

Product F

Manufacturer:	Tnemec Company, Inc. 123 West 23rd Ave, North Kansas City, MO, 64116 Phone: 1-816-483-3400 Represented locally by Florida Protective Coatings Services Office Phone: (407) 322 – 1243 Local Representative (Chad Holmes) Phone: (727) 201 – 6706
Product Name:	Body Coat (Option 1): Tnemec Series 434 Perma-Shield H_2S. Body Coat (Option 2): Tnemec Series 436 Perma-Shield FR. Glaze Coat: Tnemec Series 435 Perma-Glaze
Qualifications:	Applicator must have a minimum NACE level 1 on staff and have a minimum 5 completed projects of similar size & complexity to this work with the use of Tnemec coatings. Applicator must meet all other requirements of the municipality.
Material Classification:	434: Modified Aliphatic Amine Epoxy Mortar 436: Fiber-Reinforced Modified Polyamine Epoxy 435: Micro-Fiber Reinforced, Modified Polyamine Epoxy
Surfaces:	Field applied to existing manholes. Coat all of interior of existing concrete, brick, and block manholes, including channels and interfacing pipe joints.
Color:	Gray or Beige
Compressive Strength:	No Less than 8,866 psi (6.13 MPa) compressive strength, average of five tests.
Tensile Strength:	No less than 2,940 psi (20.3 MPa) tensile strength.
Tensile Modulus of Elasticity (ASTM D2370)	No less than 6,753 psi (46.6 MPa) tensile modulus of elasticity.
Service Condition:	**Non-potable, anaerobic wastewater environments with moderate to severe H_2S concentrations (Immersion & Headspace).**
Surface Preparation:	Abrasive blast or mechanically abrade in accordance with SSPC-SP13/NACE No. 6 to remove all existing coatings and provide a minimum ICRI CSP 5 surface profile. Surface must be clean, dry, and contaminant-free prior to coating. Cementitious surfaces with a pH less than 9 shall not be considered "contaminant-free".
Repair Materials:	Tnemec Series 218 at a nominal 1/8" and as needed to bring surfaces to level. Series 217 may also be used for deeper repairs (See Application Guide for details).
Environmental Controls:	Substrate temperature should be at least 5°F above the dew point. Refer to

	manufacturer's latest written recommendations for additional guidance.
Application:	Refer to Tnemec Product Data Sheets and Application Guides for latest storage, equipment, and application recommendations. Refer to Tnemec's Perma-Shield Details Guide for construction details.
Curing:	Maximum recoat window is 7 days. Cure for 2 days (at 75°F) prior to placing into service.
Thickness:	Body Coat (Option 1) Series 434: Nominal 1/8", or 125.0 mils thickness. Body Coat (Option 2) Series 436: Nominal 1/8", or 125.0 mils thickness. Glaze Coat Series 435: 15.0 – 20.0 mils.
Cleanup:	Tnemec's #4 thinner or MEK.
Abrasion Resistance	No more than 72 mg loss after 1,000 cycles, average of three tests.
Severe Wastewater Analysis Test (ASTM G210)	Series 434: Initial impedance of 10.6 log-Z at 0.01 Hz (ohms cm²). No blistering, cracking, checking or delamination. No less than 86.7% retention or not more than 1.4 ohms cm² reduction in log-Z electrochemical impedance at 0.01 Hz after 28 days exposure. No loss of adhesion after 28 days in S.W.A.T., average of three tests. Series 436: Initial impedance of 10.2 log-Z at 0.01 Hz (ohms cm²). No blistering, cracking, checking or delamination. No less than 83.7% retention or not more than 1.6 ohms cm² reduction in log-Z electrochemical impedance at 0.01 Hz after 28 days exposure. Series 435: Initial impedance of 12.46 log-Z at 0.01 Hz (ohms cm²). No blistering, cracking, checking or delamination. No less than 84.3% retention and no more than 1.95 ohms cm² reduction in electrochemical impedance after 28 days exposure. No less than 93% loss of tensile adhesion after 28 days in S.W.A.T. average of three tests.
Inspection Check Points:	See the subsection headed "Quality Assurance/Quality Control" in this Section of the Technical Specifications. Check Points 1 through 10.

Product G

Manufacturer:	GML Coatings, LLC. 10315 Technology Terrace, Bradenton FL 34211 (941) 755-2176, GMLCOATINGS.COM
Product Name:	Green Monster Liner Structural
Qualifications:	Coating shall be manufactured by GML Coatings, LLC., or pre-approved equal. The completed system shall provide a waterproof, corrosion resistant liner to prevent any deterioration of concrete surfaces from hydrogen sulfide and other corrosive gases/acids produced by wastewater and to prevent infiltration. **To ensure total unit responsibility, all materials and installation thereof shall be approved and furnished by, and coordinated with, GML Coatings LLC.**
Material Classification:	Green Monster Liner Structural is a two component, 100% solids, zero VOC, polyurethane hybrid, structural coating.
Surfaces:	Existing and new concrete or brick manholes, lift stations, WWTP infrastructures, metals, and fiberglass.
Color:	Light Green
Tensile Strength:	4,500 psi per ASTM D412

Flexural Modulus	>80,000 per ASTM D729
Bond (without primer):	>480 psi per ASTM D 4541 (Substrate failure) concrete >3000 psi per ASTM D 4541 (Substrate failure) carbon steel
Service Condition:	Manholes, Wetwells, WWTP
Surface Preparation:	For optimum performance, concrete should be hydro blasted and/or sandblasted. Concrete that has been adhesion tested and approved to be compatible with **Green Monster Liner Structural** should have cured completely and show a pH of 11 or lower and heated with indirect heat before priming and coating.
Repair Materials:	Remove the portion that is damaged, clean concrete behind damaged liner, prepare surrounding liner for application, apply new liner.
Environmental Controls:	Bypass wastewater as needed, provide heaters, and ventilation
Application:	Surface temperature shall be decreasing while applying liner. Surface moisture content shall be 2% or less, (RH humidity chart will allow higher reading). Prior to application of material, make sure that there is no loose dust, dirt, grease, petrochemicals, or any material that will interfere with the bonding process. For maximum adhesion, Green Monster Liner Structural should always be applied over Green Monster Primer. After following the proper steps according to the GML System Specs, Green Monster Liner Structural should be applied in a cross directional method. It is very important to maintain constant pressure while spraying. A radical variation of these pressures can result in a loss of physical properties, poor color retention, bubbling and de-bonding of the material from the surface applied to. Hose temperature should maintain a minimum temperature of 155°F.
Thickness:	It is recommended to apply Green Monster Liner Structural at a minimum thickness of 125 mils to an unlimited build thickness. Standard application thickness for manholes and lift stations is 250 mils.
Cleanup:	Cured product may be disposed of without restriction. The uncured isocyanate and resin portions should be disposed of according to local, state, and federal laws.
Inspection Check Points:	See the subsection headed "Quality Assurance/Quality Control" in this Section of the Technical Specifications. Check Points 1 through 10.

Product H

Manufacturer:	Raven Lining Systems 686 S. Adams St. Kansas City, KS. 66105 (913) 321-9000
Product Name:	Raven 405
Qualifications:	Applicator shall be trained and certified by the manufacturer as qualified to apply the specified coating.
Material Classification:	100% solids, ultra-high build, solvent-free epoxy coating
Surfaces:	Field applied to existing manholes. Coat all of interior of existing concrete, brick, and block manholes, including channels and interfacing pipe joints.
Color:	Light blue
Compressive Strength:	18,000 psi per ASTM D695
Tensile Strength:	>9000 psi per ASTM D638
Flexural Strength:	15,000 psi per ASTM D790

Shrinkage @ 90% RH:	Per manufacturer
Bond:	Shall exceed tensile strength of substrate
Low-Temp. Flexibility:	Per manufacturer, per ASTM D1790
Density:	Per manufacturer.
Service Condition:	Immersed, non-potable, non-immersed, domestic wastewater, corrosive environment, interior and exterior water pressure, traffic areas.
Surface Preparation:	Per TDS
Repair Materials:	Patching grout, infiltration control grout, and any other repair materials shall comply with the recommendations of the manufacture.
Environmental Controls:	Per manufacturer
Design:	Shall be designed to withstand the hydraulic load generated by the groundwater table. All structures shall be coated with 125 mils Raven 405 un structure is more than 60 ft below water table.
Application:	Shall be applied per manufacturer's application guidelines.
Curing:	Flow can continue after 3 to 6 hours depending on environmental conditions.
Thickness:	Per manufacturer's design. 125 mils minimum thickness.
Tolerances:	Plus 20 mils or minus 10 mils.
Cleanup:	Per manufacturer
Inspection Check Points:	See the subsection headed "Quality Assurance/Quality Control" in this Section of the Technical Specifications. Check Points 1 through 10.

END OF SECTION

THIS PAGE INTENTIONALLY LEFT BLANK

CITY OF ST. PETE BEACH					
WASTEWATER SYSTEM REHABILITATION SERVICES					
ITEM	DESCRIPTION	QTY	UNIT	UNIT PRICE	AMOUNT
MANHOLE REHABILITATION					
1	Mobilization	1	EA		$ -
2	Flagmen (Per-Flagmen)	20	HR		$ -
3	Multi Lane, Lane Closures (FDOT Index No. 613)	10	EA/DY		$ -
4	Multi Lane, Intersection (FDOT Index No. 615)	10	EA/DY		$ -
5	Arrow Boards - 5' Minimum Horizontal Size	10	EA/DY		$ -
6	Variable Message Board	10	EA/DY		$ -
7	Concrete Barrier (FDOT Index No. 100)	10	EA/DY		$ -
8	Low Profile Barrier (FDOT Index No. 120)	10	EA/DY		$ -
9	Signs in Work Zones	10	EA/DY		$ -
10	6" Solid line Thermo Plastic - Permanent	200	LF		$ -
11	24" Stop Bar, Solid, Thermo Plastic, Perm.	200	LF		$ -
12	6" Skip line (6'-10' Skip) Thermo Plastic-Perm.	200	LF		$ -
13	Barricades Type III, with Warning Lights	1000	EA/DY		$ -
14	Barricades Type I or II, with Warning Lights	1000	EA/DY		$ -
15	Repair Manhole Bench and Channel	10	EA		$ -
16	Repair Chimney, Adjust/Replace MH Casting- Unpaved	10	EA		$ -
17	Repair Chimney, Adjust/Replace MH Casting- Asphalt Pavement	100	EA		$ -
18	Rebuild Corbel/Chimney for Type B Manhole Casting	10	EA		$ -
19	Furnish Manhole Casting - Type B	10	EA		$ -
20	Furnish Manhole Casting - Type E	30	EA		$ -
21	Severe Manhole Infiltration Elimination	10	EA		$ -
22	Chemical Sealing - Grout	50	GAL		$ -
23	Internal Chimney Sealant - Type B Manhole Casing	5	EA		$ -
24	Internal Chimney Sealant - Type E Manhole Casing	10	EA		$ -
25	Additional Access Cost for Manhole Coating	10	EA		$ -
26	Bypass Pumping Setup - 6-10" diameter	5	EA		$ -
27	Bypass Pumping Setup - 12" -14" diameter	20	EA		$ -
28	Bypass Pumping Setup - 15" to 21" diameter	10	EA		$ -
29	Bypass Pumping Setup - 24" diameter	5	EA		$ -
30	Bypass Pumping Operation - 6"-10" diameter	10	DAY		$ -
31	Bypass Pumping Operation - 12"-14" diameter	50	DAY		$ -
32	Bypass Pumping Operation - 15" to 21" diameter	25	DAY		$ -
33	Bypass Pumping Operation - 24" diameter	15	DAY		$ -
34	Pure Calcium Aluminate Cementitious MH Coating - 48" diameter, Initial	50	EA		$ -
35	Pure Calcium Aluminate Cementitious MH Coating - 60" diameter, Initial	10	EA		$ -
36	Pure Calcium Aluminate Cementitious MH Coating - 72" diameter, Initial	5	EA		$ -
37	Pure Calcium Aluminate Cementitious MH Coating - 48" diameter, Additional	250	VF		$ -
38	Pure Calcium Aluminate Cementitious MH Coating - 60" diameter, Additional	50	VF		$ -
39	Pure Calcium Aluminate Cementitious MH Coating - 72" diameter, Additional	25	VF		$ -
40	Reinforced Polymer MH Coating - 48" diameter, Initial	5	EA		$ -
41	Reinforced Polymer MH Coating - 60" diameter, Initial	5	EA		$ -
42	Reinforced Polymer MH Coating - 72" diameter, Initial	5	EA		$ -
43	Reinforced Polymer MH Coating - 48" diameter, Additional	25	VF		$ -
44	Reinforced Polymer MH Coating - 60" diameter, Additional	25	VF		$ -
45	Reinforced Polymer MH Coating - 72" diameter, Additional	25	VF		$ -
46	Concrete Curb Replacement - Type D	100	LF		$ -
47	Concrete Curb Replacement - Type F	100	LF		$ -
48	Concrete Curb Replacement - Miami Curb	100	LF		$ -
49	Concrete Sidewalk Replacement - 4" Thick	50	SY		$ -
50	Concrete Sidewalk Replacement - 6" Thick	50	SY		$ -
51	Concrete Driveway Replacement - 4" Thick	50	SY		$ -
52	Concrete Driveway Replacement - 6" Thick	50	SY		$ -
53	Inflow Dish	100	EA		$ -
				SUBTOTAL - MANHOLE REHABILITATION	$ -
PIPE LINING					
1	Mobilization	1	EA		$ -
2	Flagmen (Per-Flagmen)	20	HR		$ -
3	Multi Lane, Lane Closures (FDOT Index No. 613)	10	EA/DY		$ -
4	Multi Lane, Intersection (FDOT Index No. 615)	10	EA/DY		$ -

5	Arrow Boards - 5' Minimum Horizontal Size	10	EA/DY		$ -
6	Variable Message Board	10	EA/DY		$ -
7	Concrete Barrier (FDOT Index No. 100)	10	EA/DY		$ -
8	Low Profile Barrier (FDOT Index No. 120)	10	EA/DY		$ -
9	Signs in Work Zones	10	EA/DY		$ -
10	6" Solid line Thermo Plastic - Permanent	200	LF		$ -
11	24" Stop Bar, Solid, Thermo Plastic, Perm.	200	LF		$ -
12	6" Skip line (6'-10' Skip) Thermo Plastic-Perm.	200	LF		$ -
13	Barricades Type III, with Warning Lights	1000	EA/DY		$ -
14	Barricades Type I or II, with Warning Lights	1000	EA/DY		$ -
15	CIPP Main Liner 6" Diameter - 4.5 mm thickness	1100	LF		$ -
16	CIPP Main Liner 8" Diameter - 6.0 mm thickness	72200	LF		$ -
17	CIPP Main Liner 10" Diameter - 6.0 mm thickness	3600	LF		$ -
18	CIPP Main Liner 12" Diameter - 6.0 mm thickness	2400	LF		$ -
19	CIPP Main Liner 15" Diameter - 7.5 mm thickness	1500	LF		$ -
20	CIPP Main Liner 18" Diameter - 9.0 mm thickness	1800	LF		$ -
21	CIPP Main Liner 21" Diameter - 9.0 mm thickness	2900	LF		$ -
22	CIPP Main Liner 24" Diameter - 10.5 mm thickness	3800	LF		$ -
23	CIPP Main Liner 6" Diameter - Thickness Variance + 1.5mm	300	LF		$ -
24	CIPP Main Liner 8" Diameter - Thickness Variance + 1.5mm	5000	LF		$ -
25	CIPP Main Liner 10" Diameter - Thickness Variance + 1.5mm	1000	LF		$ -
26	CIPP Main Liner 12" Diameter - Thickness Variance + 1.5mm	1000	LF		$ -
27	CIPP Main Liner 15" Diameter - Thickness Variance + 1.5mm	300	LF		$ -
28	CIPP Main Liner 18" Diameter - Thickness Variance + 1.5mm	300	LF		$ -
29	CIPP Main Liner 21" Diameter - Thickness Variance + 1.5mm	300	LF		$ -
30	CIPP Main Liner 24" Diameter - Thickness Variance + 1.5mm	300	LF		$ -
31	Bypass Pumping Setup - 6-10" diameter	5	EA		$ -
32	Bypass Pumping Setup - 12" -14" diameter	45	EA		$ -
33	Bypass Pumping Setup - 15" to 21" diameter	20	EA		$ -
34	Bypass Pumping Setup - 24" diameter	5	EA		$ -
35	Bypass Pumping Operation - 6"-10" diameter	10	DAY		$ -
36	Bypass Pumping Operation - 12"-14" diameter	90	DAY		$ -
37	Bypass Pumping Operation - 15" to 21" diameter	40	DAY		$ -
38	Bypass Pumping Operation - 24" diameter	10	DAY		$ -
39	Normal Cleaning - 6" and 8" diameter	73300	LF		$ -
40	Normal Cleaning - 10" and 12" diameter	6000	LF		$ -
41	Normal Cleaning - 15" and 18" diameter	3300	LF		$ -
42	Normal Cleaning - 21" and 24" diameter	6700	LF		$ -
43	Specialty Cleaning - 6" and 8" diameter	1000	LF		$ -
44	Specialty Cleaning - 10" and 12" diameter	100	LF		$ -
45	Specialty Cleaning - 15" and 18" diameter	50	LF		$ -
46	Specialty Cleaning - 21" and 24" diameter	100	LF		$ -
47	Chemical Sealing of Host Pipe - 10" diameter and less	30	EA		$ -
48	Chemical Sealing of Host Pipe - 12" and 15" diameter	10	EA		$ -
49	Chemical Sealing of Host Pipe - 18" to 24" diameter	5	EA		$ -
50	Chemical Sealing - Grout	100	GAL		$ -
51	Removal & Sealing of Protruding Service Connections	25	EA		$ -
52	Additional Access Cost Main Liner	25	EA		$ -
53	Service Reconnection	200	EA		$ -
54	CIPP Liner Testing	5	EA		$ -
55	Lateral Grouting	10	EA		$ -
				SUBTOTAL - PIPE LINING	$ -
POINT REPAIRS					
1	Mobilization for Routine Response	20	EA		$ -
2	Mobilization for Emergency Response	6	EA		$ -
3	Flagmen (Per-Flagmen)	20	HR		$ -
4	Multi Lane, Lane Closures (FDOT Index No. 613)	5	EA/DY		$ -
5	Multi Lane, Intersection (FDOT Index No. 615)	5	EA/DY		$ -
6	Arrow Boards - 5' Minimum Horizontal Size	10	EA/DY		$ -
7	Variable Message Board	10	EA/DY		$ -
8	Concrete Barrier (FDOT Index No. 415)	10	EA/DY		$ -
9	Low Profile Barrier (FDOT Index No. 412)	10	EA/DY		$ -
10	Signs in Work Zones	10	EA/DY		$ -

11	6" Solid line Thermo Plastic - Permanent	200	LF		$	-
12	24" Stop Bar, Solid, Thermo Plastic, Perm.	200	LF		$	-
13	6" Skip line (6'-10' Skip) Thermo Plastic-Perm.	200	LF		$	-
14	Barricades Type III, with Warning Lights	1000	EA/DY		$	-
15	Barricades Type I or II, with Warning Lights	1000	EA/DY		$	-
16	As-Built Survey	5	EA		$	-
17	Excavation, Unsuitable Material	100	CY		$	-
18	Sheeting & Bracing (Left in Place)	500	SF		$	-
19	Sheeting & Bracing, Pipe Trenches (Removed)	2500	SF		$	-
20	Well Point Dewatering Initial - 6'-8' Deep	10	EA		$	-
21	Well Point Dewatering Initial - 8'-10' Deep	10	EA		$	-
22	Well Point Dewatering Initial - 10'-12' Deep	5	EA		$	-
23	Well Point Dewatering Initial - 12'-14' Deep	5	EA		$	-
24	Well Point Dewatering Initial - 14'-16' Deep	3	EA		$	-
25	Well Point Dewatering Initial - > 16' Deep	3	EA		$	-
26	Well Point Dewatering Additional - 6'-8' Deep	200	EA		$	-
27	Well Point Dewatering Additional - 8'-10' Deep	200	EA		$	-
28	Well Point Dewatering Additional - 10'-12' Deep	100	EA		$	-
29	Well Point Dewatering Additional - 12'-14' Deep	100	EA		$	-
30	Well Point Dewatering Additional - 14'-16' Deep	50	EA		$	-
31	Well Point Dewatering Additional - > 16' Deep	50	EA		$	-
32	Jack & Bore 12" x .188" Steel Casing (6" GS)	40	LF		$	-
33	Jack & Bore 16" x .219" Steel Casing (8" GS)	40	LF		$	-
34	Jack & Bore 20" x .250" Steel Casing (10" GS)	40	LF		$	-
35	Jack & Bore 24" x .281" Steel Casing (12" GS)	40	LF		$	-
36	2" Directional Drill HDPE DR 9, IPS OD	200	LF		$	-
37	4" Directional Drill HDPE DR 11, DIPS OD	300	LF		$	-
38	6" Directional Drill HDPE DR 11, DIPS OD	500	LF		$	-
39	8" Directional Drill HDPE DR 11, DIPS OD	500	LF		$	-
40	10" Directional Drill HDPE DR 11, DIPS OD	500	LF		$	-
41	12" Directional Drill HDPE DR 11, DIPS OD	300	LF		$	-
42	6" PVC Pipe, C-900 DR 18 (Gravity Sewer) 0' - 6' Depth	100	LF		$	-
43	6" PVC Pipe, C-900 DR 18 (Gravity Sewer) 6' - 8' Depth	200	LF		$	-
44	6" PVC Pipe, C-900 DR 18 (Gravity Sewer) 8' - 10' Depth	100	LF		$	-
45	6" PVC Pipe, C-900 DR 18 (Gravity Sewer) 10' - 12' Depth	50	LF		$	-
46	6" PVC Pipe, C-900 DR 18 (Gravity Sewer) 12' - 14' Depth	50	LF		$	-
47	6" PVC Pipe, C-900 DR 18 (Gravity Sewer) 14' - 16' Depth	50	LF		$	-
48	6" PVC Pipe, C-900 DR 18 (Gravity Sewer) 16' - 18' Depth	50	LF		$	-
49	8" DI Pipe, CL 350 (Gravity Sewer) 0' - 6' Depth	50	LF		$	-
50	8" DI Pipe, CL 350 (Gravity Sewer) 6' - 8' Depth	100	LF		$	-
51	8" DI Pipe, CL 350 (Gravity Sewer) 8' - 10' Depth	100	LF		$	-
52	8" DI Pipe, CL 350 (Gravity Sewer) 10' - 12' Depth	50	LF		$	-
53	8" DI Pipe, CL 350 (Gravity Sewer) 12' - 14' Depth	50	LF		$	-
54	8" DI Pipe, CL 350 (Gravity Sewer) 14' - 16' Depth	50	LF		$	-
55	8" DI Pipe, CL 350 (Gravity Sewer) 16' - 18' Depth	50	LF		$	-
56	8" PVC Pipe, C-900 DR 18 (Gravity Sewer) 0' - 6' Depth	200	LF		$	-
57	8" PVC Pipe, C-900 DR 18 (Gravity Sewer) 6' - 8' Depth	400	LF		$	-
58	8" PVC Pipe, C-900 DR 18 (Gravity Sewer) 8' - 10' Depth	400	LF		$	-
59	8" PVC Pipe, C-900 DR 18 (Gravity Sewer) 10' - 12' Depth	400	LF		$	-
60	8" PVC Pipe, C-900 DR 18 (Gravity Sewer) 12' - 14' Depth	400	LF		$	-
61	8" PVC Pipe, C-900 DR 18 (Gravity Sewer) 14' - 16' Depth	200	LF		$	-
62	8" PVC Pipe, C-900 DR 18 (Gravity Sewer) 16' - 18' Depth	200	LF		$	-
63	10" DI Pipe, CL 350 (Gravity Sewer) 0' - 6' Depth	50	LF		$	-
64	10" DI Pipe, CL 350 (Gravity Sewer) 6' - 8' Depth	100	LF		$	-
65	10" DI Pipe, CL 350 (Gravity Sewer) 8' - 10' Depth	100	LF		$	-
66	10" DI Pipe, CL 350 (Gravity Sewer) 10' - 12' Depth	50	LF		$	-
67	10" DI Pipe, CL 350 (Gravity Sewer) 12' - 14' Depth	50	LF		$	-
68	10" DI Pipe, CL 350 (Gravity Sewer) 14' - 16' Depth	50	LF		$	-
69	10" DI Pipe, CL 350 (Gravity Sewer) 16' - 18' Depth	50	LF		$	-
70	10" PVC Pipe, C-900 DR 18 (Gravity Sewer) 0' -6' Depth	100	LF		$	-
71	10" PVC Pipe, C-900 DR 18 (Gravity Sewer) 6' - 8' Depth	400	LF		$	-
72	10" PVC Pipe, C-900 DR 18 (Gravity Sewer) 8' - 10' Depth	400	LF		$	-
73	10" PVC Pipe, C-900 DR 18 (Gravity Sewer) 10' - 12' Depth	400	LF		$	-

74	10" PVC Pipe, C-900 DR 18 (Gravity Sewer) 12' - 14' Depth	400	LF		$	-
75	10" PVC Pipe, C-900 DR 18 (Gravity Sewer) 14' - 16' Depth	200	LF		$	-
76	10" PVC Pipe, C-900 DR 18 (Gravity Sewer) 16' - 18' Depth	200	LF		$	-
77	12" DI Pipe, CL 350 (Gravity Sewer) 0' - 6' Depth	50	LF		$	-
78	12" DI Pipe, CL 350 (Gravity Sewer) 6' - 8' Depth	100	LF		$	-
79	12" DI Pipe, CL 350 (Gravity Sewer) 8' - 10' Depth	100	LF		$	-
80	12" DI Pipe, CL 350 (Gravity Sewer) 10' - 12' Depth	100	LF		$	-
81	12" DI Pipe, CL 350 (Gravity Sewer) 12' - 14' Depth	100	LF		$	-
82	12" DI Pipe, CL 350 (Gravity Sewer) 14' - 16' Depth	50	LF		$	-
83	12" DI Pipe, CL 350 (Gravity Sewer) 16' - 18' Depth	50	LF		$	-
84	12" PVC Pipe, C-900 DR 18 (Gravity Sewer) 0' ' 6' Depth	100	LF		$	-
85	12" PVC Pipe, C-900 DR 18 (Gravity Sewer) 6' - 8' Depth	200	LF		$	-
86	12" PVC Pipe, C-900 DR 18 (Gravity Sewer) 8' - 10' Depth	200	LF		$	-
87	12" PVC Pipe, C-900 DR 18 (Gravity Sewer) 10' - 12' Depth	100	LF		$	-
88	12" PVC Pipe, C-900 DR 18 (Gravity Sewer) 12' - 14' Depth	100	LF		$	-
89	12" PVC Pipe, C-900 DR 18 (Gravity Sewer) 14' - 16' Depth	50	LF		$	-
90	12" PVC Pipe, C-900 DR 18 (Gravity Sewer) 16' - 18' Depth	50	LF		$	-
91	16" DI Pipe, CL 350 (Gravity Sewer) 0' - 6' Depth	200	LF		$	-
92	16" DI Pipe, CL 350 (Gravity Sewer) 6' - 8' Depth	400	LF		$	-
93	16" DI Pipe, CL 350 (Gravity Sewer) 8' - 10' Depth	400	LF		$	-
94	16" DI Pipe, CL 350 (Gravity Sewer) 10' - 12' Depth	200	LF		$	-
95	16" DI Pipe, CL 350 (Gravity Sewer) 12' - 14' Depth	200	LF		$	-
96	16" DI Pipe, CL 350 (Gravity Sewer) 14' - 16' Depth	100	LF		$	-
97	16" DI Pipe, CL 350 (Gravity Sewer) 16' - 18' Depth	100	LF		$	-
98	16" PVC Pipe, C-905 DR 18 (Gravity Sewer) 0' - 6' Depth	100	LF		$	-
99	16" PVC Pipe, C-905 DR 18 (Gravity Sewer) 6' - 8' Depth	200	LF		$	-
100	16" PVC Pipe, C-905 DR 18 (Gravity Sewer) 8' - 10' Depth	200	LF		$	-
101	16" PVC Pipe, C-905 DR 18 (Gravity Sewer) 10' - 12' Depth	100	LF		$	-
102	16" PVC Pipe, C-905 DR 18 (Gravity Sewer) 12' - 14' Depth	100	LF		$	-
103	16" PVC Pipe, C-905 DR 18 (Gravity Sewer) 14' - 16' Depth	50	LF		$	-
104	16" PVC Pipe, C-905 DR 18 (Gravity Sewer) 16' - 18' Depth	50	LF		$	-
105	18" DI Pipe, CL 350 (Gravity Sewer) 0' - 6' Depth	200	LF		$	-
106	18" DI Pipe, CL 350 (Gravity Sewer) 6' - 8' Depth	400	LF		$	-
107	18" DI Pipe, CL 350 (Gravity Sewer) 8' - 10' Depth	400	LF		$	-
108	18" DI Pipe, CL 350 (Gravity Sewer) 10' - 12' Depth	200	LF		$	-
109	18" DI Pipe, CL 350 (Gravity Sewer) 12' - 14' Depth	200	LF		$	-
110	18" DI Pipe, CL 350 (Gravity Sewer) 14' - 16' Depth	100	LF		$	-
111	18" DI Pipe, CL 350 (Gravity Sewer) 16' - 18' Depth	100	LF		$	-
112	18" PVC Pipe, C-905 DR 21 (Gravity Sewer) 0' - 6' Depth	100	LF		$	-
113	18" PVC Pipe, C-905 DR 21 (Gravity Sewer) 6' - 8' Depth	200	LF		$	-
114	18" PVC Pipe, C-905 DR 21 (Gravity Sewer) 8' - 10' Depth	200	LF		$	-
115	18" PVC Pipe, C-905 DR 21 (Gravity Sewer) 10' - 12' Depth	100	LF		$	-
116	18 PVC Pipe, C-905 DR 21 (Gravity Sewer) 12' - 14' Depth	100	LF		$	-
117	18" PVC Pipe, C-905 DR 21 (Gravity Sewer) 14' - 16' Depth	50	LF		$	-
118	18" PVC Pipe, C-905 DR 21 (Gravity Sewer) 16' - 18' Depth	50	LF		$	-
119	21" DI Pipe, CL 350 (Gravity Sewer) 0' - 6' Depth	200	LF		$	-
120	21" DI Pipe, CL 350 (Gravity Sewer) 6' - 8' Depth	400	LF		$	-
121	21" DI Pipe, CL 350 (Gravity Sewer) 8' - 10' Depth	400	LF		$	-
122	21" DI Pipe, CL 350 (Gravity Sewer) 10' - 12' Depth	200	LF		$	-
123	21" DI Pipe, CL 350 (Gravity Sewer) 12' - 14' Depth	200	LF		$	-
124	21" DI Pipe, CL 350 (Gravity Sewer) 14' - 16' Depth	100	LF		$	-
125	21" DI Pipe, CL 350 (Gravity Sewer) 16' - 18' Depth	100	LF		$	-
126	21" PVC Pipe, C-905 DR 21 (Gravity Sewer) 0' - 6' Depth	100	LF		$	-
127	21" PVC Pipe, C-905 DR 21 (Gravity Sewer) 6' - 8' Depth	200	LF		$	-
128	21" PVC Pipe, C-905 DR 21 (Gravity Sewer) 8' - 10' Depth	200	LF		$	-
129	21" PVC Pipe, C-905 DR 21 (Gravity Sewer) 10' - 12' Depth	100	LF		$	-
130	21" PVC Pipe, C-905 DR 21 (Gravity Sewer) 12' - 14' Depth	100	LF		$	-
131	21" PVC Pipe, C-905 DR 21 (Gravity Sewer) 14' - 16' Depth	50	LF		$	-
132	21" PVC Pipe, C-905 DR 21 (Gravity Sewer) 16' - 18' Depth	50	LF		$	-
133	24" DI Pipe, CL 350 (Gravity Sewer) 0' - 6' Depth	200	LF		$	-
134	24" DI Pipe, CL 350 (Gravity Sewer) 6' - 8' Depth	400	LF		$	-
135	24" DI Pipe, CL 350 (Gravity Sewer) 8' - 10' Depth	400	LF		$	-
136	24" DI Pipe, CL 350 (Gravity Sewer) 10' - 12' Depth	200	LF		$	-

137	24" DI Pipe, CL 350 (Gravity Sewer) 12' - 14' Depth	200	LF		$	-
138	24" DI Pipe, CL 350 (Gravity Sewer) 14' - 16' Depth	100	LF		$	-
139	24" DI Pipe, CL 350 (Gravity Sewer) 16' - 18' Depth	100	LF		$	-
140	24" PVC Pipe, C-905 DR 21 (Gravity Sewer) 0' - 6' Depth	100	LF		$	-
141	24" PVC Pipe, C-905 DR 21 (Gravity Sewer) 6' - 8' Depth	200	LF		$	-
142	24" PVC Pipe, C-905 DR 21 (Gravity Sewer) 8' - 10' Depth	200	LF		$	-
143	24" PVC Pipe, C-905 DR 21 (Gravity Sewer) 10' - 12' Depth	100	LF		$	-
144	24" PVC Pipe, C-905 DR 21 (Gravity Sewer) 12' - 14' Depth	100	LF		$	-
145	24" PVC Pipe, C-905 DR 21 (Gravity Sewer) 14' - 16' Depth	50	LF		$	-
146	24" PVC Pipe, C-905 DR 21 (Gravity Sewer) 16' - 18' Depth	50	LF		$	-
147	Install PVC Cleanout	10	EA		$	-
148	Replace PVC Cleanout with Manhole Structure	10	EA		$	-
149	Remove Pipe 2" or 4" (Gravity Sewer)	200	LF		$	-
150	Remove Pipe 6" or 8" (Gravity Sewer)	400	LF		$	-
151	Remove Pipe 10" or 12" (Gravity Sewer)	400	LF		$	-
152	Remove Pipe 15", 16" or 18" (Gravity Sewer)	200	LF		$	-
153	Remove Pipe 21" or 24" (Gravity Sewer)	200	LF		$	-
154	4" Pipe - Install or Adjust Service Lateral 0'-6' Deep	3	EA		$	-
155	4" Pipe - Install or Adjust Service Lateral 6'-8' Deep	3	EA		$	-
156	4" Pipe - Install or Adjust Service Lateral 8'-10' Deep	3	EA		$	-
157	4" Pipe - Install or Adjust Service Lateral 10'-12'Deep	3	EA		$	-
158	4" Pipe - Install or Adjust Service Lateral 12'-14'Deep	2	EA		$	-
159	4" Pipe - Install or Adjust Service Lateral 14'-16'Deep	2	EA		$	-
160	4" Pipe - Install or Adjust Service Lateral 16'-18' Deep	2	EA		$	-
161	6" Pipe - Install or Adjust Service Lateral 0'-6' Deep	3	EA		$	-
162	6" Pipe - Install or Adjust Service Lateral 6'-8' Deep	3	EA		$	-
163	6" Pipe - Install or Adjust Service Lateral 8'-10' Deep	3	EA		$	-
164	6" Pipe - Install or Adjust Service Lateral 10'-12' Deep	3	EA		$	-
165	6" Pipe - Install or Adjust Service Lateral 12'-14' Deep	2	EA		$	-
166	6" Pipe - Install or Adjust Service Lateral 14'-16' Deep	2	EA		$	-
167	6" Pipe - Install or Adjust Service Lateral 16'-18' Deep	2	EA		$	-
168	2" Sewer Line Manhole Connection	3	EA		$	-
169	4" Sewer Line Manhole Connection	3	EA		$	-
170	6" Sewer Line Manhole Connection	5	EA		$	-
171	8" Sewer Line Manhole Connection	5	EA		$	-
172	10" Sewer Line Manhole Connection	3	EA		$	-
173	12" Sewer Line Manhole Connection	3	EA		$	-
174	16" Sewer Line Manhole Connection	3	EA		$	-
175	18" Sewer Line Manhole Connection	2	EA		$	-
176	21” Sewer Line Manhole Connection	2	EA		$	-
177	24” Sewer Line Manhole Connection	2	EA		$	-
178	2" Inside Drop Connection	3	EA		$	-
179	4" Inside Drop Connection	3	EA		$	-
180	6" Inside Drop Connection	3	EA		$	-
181	8" Inside Drop Connection	5	EA		$	-
182	10" Inside Drop Connection	3	EA		$	-
183	12" Inside Drop Connection	3	EA		$	-
184	15"/16" Inside Drop Connection	3	EA		$	-
185	18" Inside Drop Connection	2	EA		$	-
186	21" Inside Drop Connection	3	EA		$	-
187	24" Inside Drop Connection	2	EA		$	-
188	Grouting Out of Service Pipe (Force Main)	30	CY		$	-
189	Disconnect & Plug 2" or 4" Pipe	5	EA		$	-
190	Disconnect & Plug 6" or 8" Pipe	5	EA		$	-
191	Disconnect & Plug 10" or 12" Pipe	5	EA		$	-
192	2" PVC Restrained Joint Pipe & Fittings FM, SDR 21	200	LF		$	-
193	4" PVC Pipe, C-900 DR 18 (Force Main)	500	LF		$	-
194	4" PVC Restrained Joint Pipe & Fittings FM, C-900 DR 18	100	LF		$	-
195	6" PVC Pipe, C-900 DR 18 (Force Main)	500	LF		$	-
196	6" PVC Restrained Joint Pipe & Fittings FM, C-900 DR 18	100	LF		$	-
197	8" PVC Pipe, C-900 DR 18 (Force Main)	500	LF		$	-
198	8" PVC Restrained Joint Pipe & Fittings FM, C-900 DR 18	100	LF		$	-
199	10" PVC Pipe, C-900 DR 18 (Force Main)	500	LF		$	-

200	10" PVC Restrained Joint Pipe & Fittings FM, C-900 DR 18	100	LF		$	-
201	12" PVC Pipe, C-900 DR 18 (Force Main)	300	LF		$	-
202	12" PVC Restrained Joint Pipe & Fittings FM, C-900 DR 18	100	LF		$	-
203	2" Restrained Joints	20	EA		$	-
204	4" Restrained Joints	20	EA		$	-
205	6" Restrained Joints	20	EA		$	-
206	8" Restrained Joints	20	EA		$	-
207	10" Restrained Joints	20	EA		$	-
208	12" Restrained Joints	20	EA		$	-
209	2"-4" Forcemain Pipe and Appurtenances - Over Depth Excavation	400	LF		$	-
210	6"-8" Forcemain Pipe and Appurtenances - Over Depth Excavation	500	LF		$	-
211	10"-12" Forcemain Pipe and Appurtenances - Over Depth Excavation	200	LF		$	-
212	Remove Out of Service Pipe 2" or 4" (Force Main)	500	LF		$	-
213	Remove Out of Service Pipe 6" or 8" (Force Main)	1000	LF		$	-
214	Remove Out of Service Pipe 10" or 12" (Force Main)	500	LF		$	-
215	2" Sleeved Connection	6	EA		$	-
216	4" Sleeved Connection	6	EA		$	-
217	6" Sleeved Connection	10	EA		$	-
218	8" Sleeved Connection	10	EA		$	-
219	10" Sleeved Connection	4	EA		$	-
220	12" Sleeved Connection	4	EA		$	-
221	Reverse Deadman for 2" or 4" Pipe	3	EA		$	-
222	Reverse Deadman for 6" or 8" Pipe	5	EA		$	-
223	Reverse Deadman for 10" or 12" Pipe	3	EA		$	-
224	DI Fittings FM C 153 (Compact Body)	2	TN		$	-
225	2" Air Release Assembly (In-line)	2	EA		$	-
226	2" Air Release Assembly (Offset)	2	EA		$	-
227	2" RWGV (Resilient Wedge Gate Valve) & Box	4	EA		$	-
228	4" RWGV & Box C 515	4	EA		$	-
229	6" RWGV & Box C 515	10	EA		$	-
230	8" RWGV & Box C 515	5	EA		$	-
231	10" RWGV & Box C 515	2	EA		$	-
232	12" RWGV & Box C 515	2	EA		$	-
233	Adjust Valve Box to Finished Grade (In Pavement)	5	EA		$	-
234	Adjust Valve Box to Finished Grade (Outside of Pavement)	5	EA		$	-
235	4" Line Stop	1	EA		$	-
236	6" Line Stop	1	EA		$	-
237	8" Line Stop	1	EA		$	-
238	10" Line Stop	1	EA		$	-
239	12" Line Stop	1	EA		$	-
240	4" x 2" Tapping Saddle Valve & Box	2	EA		$	-
241	4" x 4" Tapping Sleeve Valve & Box	2	EA		$	-
242	6" x 2" Tapping Saddle Valve & Box	2	EA		$	-
243	6" x 4" Tapping Sleeve Valve & Box	2	EA		$	-
244	6" x 6" Tapping Sleeve Valve & Box	2	EA		$	-
245	8" x 2" Tapping Saddle Valve & Box	2	EA		$	-
246	8" x 4" Tapping Sleeve Valve & Box	2	EA		$	-
247	8" x 6" Tapping Sleeve Valve & Box	2	EA		$	-
248	8" x 8" Tapping Sleeve Valve & Box	2	EA		$	-
249	10" x 2" Tapping Saddle Valve & Box	2	EA		$	-
250	10" x 4" Tapping Sleeve Valve & Box	2	EA		$	-
251	10" x 6" Tapping Sleeve Valve & Box	2	EA		$	-
252	10" x 8" Tapping Sleeve Valve & Box	2	EA		$	-
253	10" x 10" Tapping Sleeve Valve & Box	2	EA		$	-
254	12" x 2" Tapping Saddle Valve & Box	2	EA		$	-
255	12" x 4" Tapping Sleeve Valve & Box	2	EA		$	-
256	12" x 6" Tapping Sleeve Valve & Box	2	EA		$	-
257	12" x 8" Tapping Sleeve Valve & Box	2	EA		$	-
258	12" x 10" Tapping Sleeve Valve & Box	2	EA		$	-
259	12" x 12" Tapping Sleeve Valve & Box	2	EA		$	-
260	4' Dia. - Precast Manhole Standard	30	VF		$	-
261	4' Dia. - Precast Manhole Inside Drop	10	VF		$	-
262	4' Dia. - Precast Manhole Outside Drop	10	VF		$	-

263	5' Dia. - Precast Manhole Standard	30	VF		$	-
264	5' Dia. - Precast Manhole Inside Drop	10	VF		$	-
265	5' Dia. - Precast Manhole Outside Drop	10	VF		$	-
266	5' Dia. - Precast Air Release Manhole	10	VF		$	-
267	6' Dia. - Precast Manhole Standard	30	VF		$	-
268	6' Dia. - Precast Manhole Inside Drop	10	VF		$	-
269	6' Dia. - Precast Manhole Outside Drop	10	VF		$	-
270	Removal of Existing Manhole	3	EA		$	-
271	Remove Existing Manhole Additional	30	VF		$	-
272	Initial Excavation - 0'-6' Deep	5	EA		$	-
273	Initial Excavation - 6'-8' Deep	6	EA		$	-
274	Initial Excavation - 8'-10' Deep	6	EA		$	-
275	Initial Excavation - 10'-12' Deep	6	EA		$	-
276	Initial Excavation - 12'-14' Deep	3	EA		$	-
277	Initial Excavation - 14'-16' Deep	3	EA		$	-
278	Initial Excavation - 16'-18' Deep	2	EA		$	-
279	Initial Excavation - 18'-20' Deep	2	EA		$	-
280	Additional Excavation - 0'-6' Deep	100	LF		$	-
281	Additional Excavation - 6'-8' Deep	100	LF		$	-
282	Additional Excavation - 8'-10' Deep	100	LF		$	-
283	Additional Excavation - 10'-12' Deep	100	LF		$	-
284	Additional Excavation - 12'-14' Deep	100	LF		$	-
285	Additional Excavation - 14'-16' Deep	100	LF		$	-
286	Additional Excavation - 16'-18' Deep	50	LF		$	-
287	Additional Excavation - 18'-20' Deep	50	LF		$	-
288	Wastewater Bypass Pumping, Set up, 6" - 10" diameter	5	EA		$	-
289	Wastewater Bypass Pumping, Set up, 12" - 14" diameter	2	EA		$	-
290	Wastewater Bypass Pumping, Set up, 15" - 21" diameter	2	EA		$	-
291	Wastewater Bypass Pumping, Set up, 24" diameter	2	EA		$	-
292	Wastewater Bypass Pumping, Operation, 6" - 10" diameter	10	DAY		$	-
293	Wastewater Bypass Pumping, Operation, 12" - 14" diameter	5	DAY		$	-
294	Wastewater Bypass Pumping, Operation, 15" - 21" diameter	5	DAY		$	-
295	Wastewater Bypass Pumping, Operation, 24" diameter	2	DAY		$	-
296	6" Dia. Pipe Gravity Sewer Point Repair (DI Replacement Pipe)	2	EA		$	-
297	6" Dia. Pipe Gravity Sewer Point Repair (PVC Replacement Pipe)	5	EA		$	-
298	8" Dia. Pipe Gravity Sewer Point Repair (DI Replacement Pipe)	2	EA		$	-
299	8" Dia. Pipe Gravity Sewer Point Repair (PVC Replacement Pipe)	5	EA		$	-
300	10" Dia. Pipe Gravity Sewer Point Repair (DI Replacement Pipe)	2	EA		$	-
301	10" Dia. Pipe Gravity Sewer Point Repair (PVC Replacement Pipe)	5	EA		$	-
302	12" Dia. Pipe Gravity Sewer Point Repair (DI Replacement Pipe)	2	EA		$	-
303	12" Dia. Pipe Gravity Sewer Point Repair (PVC Replacement Pipe)	5	EA		$	-
304	15"/16" Dia. Pipe Gravity Sewer Point Repair (DI Replacement Pipe)	2	EA		$	-
305	15"/16" Dia. Pipe Gravity Sewer Point Repair (PVC Rplacement Pipe)	2	EA		$	-
306	18" Dia. Pipe Gravity Sewer Point Repair (DI Replacement Pipe)	2	EA		$	-
307	18" Dia. Pipe Gravity Sewer Point Repair (PVC Replacement Pipe)	2	EA		$	-
308	21" Dia. Pipe Gravity Sewer Point Repair (DI Replacement Pipe)	2	EA		$	-
309	21" Dia. Pipe Gravity Sewer Point Repair(PVC Replacement Pipe)	2	EA		$	-
310	24" Dia. Pipe Gravity Sewer Point Repair (DI Replacement Pipe)	2	EA		$	-
311	24" Dia. Pipe Gravity Sewer Point Repair (PVC Replacement Pipe)	2	EA		$	-
312	6" Dia. Pipe Gravity Sewer Point Repair - Additional Length (DI Replacement Pipe)	20	LF		$	-
313	6" Dia. Pipe Gravity Sewer Point Repair - Additional Length (PVC Replacement Pipe)	50	LF		$	-
314	8" Dia. Pipe Gravity Sewer Point Repair - Additional Length (DI Replacement Pipe)	20	LF		$	-
315	8" Dia. Pipe Gravity Sewer Point Repair - Additional Length (PVC Replacement Pipe)	100	LF		$	-
316	10" Dia. Pipe Gravity Sewer Point Repair - Additional Length (DI Replacement Pipe)	20	LF		$	-
317	10" Dia. Pipe Gravity Sewer Point Repair - Additional Length (PVC Replacement Pipe)	100	LF		$	-
318	12" Dia. Pipe Gravity Sewer Point Repair Additional Length (DI Replacement Pipe)	50	LF		$	-
319	12" Dia. Pipe Gravity Sewer Point Repair - Additional Length (PVC Replacement Pipe)	20	LF		$	-
320	15"/16" Dia. Pipe Gravity Sewer Point Repair - Additional Length (DI Replacement Pipe)	20	LF		$	-
321	15"/16" Dia. Pipe Gravity Sewer Point Repair - Additional Length (PVC Replacement Pipe)	50	LF		$	-
322	18" Dia. Pipe Gravity Sewer Point Repair - Additional Length (DI Replacement Pipe)	20	LF		$	-
323	18" Dia. Pipe Gravity Sewer Point Repair - Additional Length (PVC Replacement Pipe)	50	LF		$	-
324	21" Dia. Pipe Gravity Sewer Point Repair - Additional Length (DI Replacement Pipe)	20	LF		$	-
325	21" Dia. Pipe Gravity Sewer Point Repair - Additional Length (PVC Replacement Pipe)	50	LF		$	-

326	24" Dia. Pipe Gravity Sewer Point Repair - Additional Length (DI Replacement Pipe)	20	LF		$	-
327	24" Dia. Pipe Gravity Sewer Point Repair - Additional Length (PVC Replacement Pipe)	50	LF		$	-
328	2" Dia. Pipe Forcemain Point Repair	3	EA		$	-
329	4" Dia. Pipe Forcemain Point Repair	3	EA		$	-
330	6" Dia. Pipe Forcemain Point Repair	3	EA		$	-
331	8" Dia. Pipe Forcemain Point Repair	3	EA		$	-
332	10" Dia. Pipe Forcemain Point Repair	2	EA		$	-
333	12" Dia. Pipe Forcemain Point Repair	2	EA		$	-
334	Replace Manhole Ring & Cover (Asphalt Pavement)	5	EA		$	-
335	Replace Manhole Ring & Cover (Unpaved)	5	EA		$	-
336	Manhole Bench Replacement, 4' Diameter	2	EA		$	-
337	Manhole Bench Replacement, 5' Diameter	2	EA		$	-
338	Manhole Bench Replacement, 6' Diameter	2	EA		$	-
339	Adjust Manhole Ring & Cover to Finished Grade (In Pavement)	5	EA		$	-
340	Adjust Manhole Ring & Cover to Finished Grade (Outside of Pavement)	5	EA		$	-
341	Flowable Concrete Fill	100	CY		$	-
342	Roadway Base, Lime Rock, Primed, Min. LBR 100, Variable Thickness	120	CY		$	-
343	Roadway Base, Crushed Concrete/Graded Aggregate, Min. LBR 100, Variable Thickness	120	CY		$	-
344	Superpave Asphalt Base, Type B 12.5, Variable Thickness	50	TN		$	-
345	Superpave Asphalt Concrete, Type SP 9.5, Fine, Traffic Level C, Variable Thickness	100	TN		$	-
346	Superpave Asphalt Concrete, Type SP 12.5, Fine, Traffic Level C, Variable Thickness	100	TN		$	-
347	Pavement, Cement Concrete, 6" Min Thickness (Driveways)	100	SY		$	-
348	Pavement, Cement Concrete, 8" Thick	100	SY		$	-
349	Driveway Restoration, In Kind, Decorative Block	50	SY		$	-
350	Milling Existing Asphalt Pavement, 1/2" Average Depth	150	SY		$	-
351	Milling Existing Asphalt Pavement, 3/4" Average Depth	150	SY		$	-
352	Milling Existing Asphalt Pavement, 1" Average Depth	150	SY		$	-
353	Curb & Gutter, Concrete, FDOT Type D	100	LF		$	-
354	Curb & Gutter Concrete, FDOT Type F	100	LF		$	-
355	Curb & Gutter, Concrete, Miami Curb	300	LF		$	-
356	Valley Gutter, Concrete, PCED Index 1315	100	LF		$	-
357	Sidewalk, Concrete, 4" Min. Thickness, Remove and Replace	500	SF		$	-
358	Sidewalk, Concrete, 6" Min. Thickness, Remove and Replace	500	SF		$	-
359	Sodding	4500	SF		$	-
360	Sectional Liner, 6" - 24" Pipe	50	EA		$	-
				SUBTOTAL - POINT REPAIRS	$	-
				GRAND TOTAL	$	-

Bid quantities are for comparison purposes only.
This contract consists of various projects which are not yet defined and no quantities are guaranteed.

155 Corey Avenue
St. Pete Beach, FL 33706-1839
www.stpetebeach.org

ADDENDUM 1

Wastewater System Rehabilitation Services

Issued 3/23/2026

*Sealed bids must be received by **9:00 AM on 04/08/2026** electronically via Bonfire. Bids received after the deadline will not be accepted. They will be publicly opened and read at **10:00 AM on 04/08/2026**. All bidders are invited to attend this bid Opening.*

Addendum 1 includes:

Pre-bid Minutes
Questions and Answers

Optional - Pre-Bid Meeting Minutes
RFP: Wastewater System Rehab Services
March 18, 2026
11:00 AM

Staff Members Present:
Sara Spain, Procurement Manager
John Taylor, Assistant Finance Director
Camden Mills, Public Services Director
Brian Peckins, Assistant Public Services Director
Dejan Milosevic, Project Manager
Michael Weaver, Infrastructure Operations Manager
Brian Gelock, Public Services
Kenneth Kosbab, Public Services
Shawn Clark, Public Services
Ariana Wilson-Romo, Exec. Assistant City Clerk's Office

Others Present:

Name	***Company***	***Contact***
Abbey Boyle	PCS Civil	abbeyb@pcscivilinc.com
Chad Holmes	Tnemec	cholmes@tnemec.com
Chris Currie	Inliner Solutions	Chris.currie@puriscorp.com
Denise Davis	Gulf Coast Underground LLC	ddavis@gogcu.com
Tom Brown	Restoration & Protective Solutions	tom@rps.llc
Drew Giustina	Restoration & Protective Solutions	andrew@rps.llc
Emily Bennett	Insituform Technologies LLC	ebennett@azuria.com
Austen Wagoner	Engineered Coatings Solutions LLC	awagoner@ecscoatings.com
Tristan Hine	PCS Civil	tristanh@pcscivilinc.com
Kevin Rowland	Did not provide	Did not provide
Nolan Leal	Rowland DE LLC	nleal@acus-us.com
Mary Hortman	Inliner Solutions LLC	flbids@puriscorp.com
Sawyer Hill	Elite Industrial Painting Inc.	sawyer@eipainting.com
Kyle Matheny	Kimley Horn and Associates	Kyle.matheny@kimley-horn.com
Shawn Ready	Did not provide	Shawn.ready@vortexcompanies.com
Amanda Gonzalez	Kimley Horn and Associates	Amanda.gonzalez@kimley-horn.com
Bruno Sequeira	BCS Construction Group	bsequeira@bcsconstructiongrp.com
Bob Baker	Did not provide	Did not provide
Mark Cassineri	Inliner Solutions	Mark.cassineri@puriscorp.com
Shayna Agosta	Did not provide	sagosta@nwmcc.com

The meeting was called to order at 11:03 AM.

All attendees were present via Teams.

Ms. Spain briefly reviewed important dates and times which are as follows:

- Receipt of questions due 3/25 at 10AM
- Bids due 4/8 by 9AM
- Bid opening 4/8 at 10AM

She requested that any questions be submitted in writing to purchasing@stpetebeach.org. Questions will be answered via an addendum that will be posted to the City website and Bonfire.

Public Services Director Camden Mills summarized that this project will be for as-needed repairs to the City's wastewater collection system. Multiple vendors may be awarded.

The following questions were asked:
Q: Bid bond required? A: Will clarify via an addendum.
Q: Can previous bid tabulations for this project be shared? A:No bid tabs to provide, this is the first time the City has issued a project like this.
Q: Is there anticipated work already prepared? A: Yes, this can be shared via an addendum.
Q: Anticipated annual budget? A: Yes, will clarify in an addendum.
Q: Is there a self- performed percentage requirement? A: Will clarify via an addendum.
Q: Does the City need to be listed for proof of insurance? A: Yes.
Q: Can you provide the address exactly how it needs to be for the COIs? A: Yes.

Mr. Taylor clarified that this is bondable based on the project at that time, meaning a bid bond is not required to submit on this bid however it may be required based on project costs.

There being no additional questions, the meeting was adjourned at 11:16 AM.

Questions and Answers:

1. **Can you confirm if there are any DBE Requirements or good faith efforts to complete for this project? No. Because there are no federal funds nor does the City of St. Pete Beach include these requirements in the Procurement Ordinance, there are no DBE requirements.**
2. **Are there any SBEs/DBEs requirements? No. Because there are no federal funds nor does the City of St. Pete Beach include these requirements in the Procurement Ordinance, there are no SBE/DBE requirements.**
3. **Is a bid bond required? If so, what is the percentage? Yes, 5% of the total bid price.**
4. **What is the engineer's estimate / annual budget cost? Estimated $1,000,000 to $2,500,000 annually.**
5. **I was not able to locate a proposed budget for this project, would you happen to have that information available? Estimated $1,000,000 to $2,500,000 annually.**
6. **Are there any liquidated damages? Yes. If the work embraced by this Contract is not completed on or before the date set for completion or any extension thereof, the actual damages for the delay will be impossible to determine and in lieu thereof, the Contractor shall pay to the City fixed, agreed, and liquidated damages in the amount of either Five-Hundred Dollars ($500) per day for each calendar day of delay until the work is satisfactorily completed.**
7. **Hinterland Group respectfully request that Refratta's 100% pure-fused calcium aluminate coating be approved as an equal under that manhole rehabilitation specifications. Refratta's specs are attached for your review. The specifications for CIPP liner materials and manhole lining materials do not specify specific manufacturers and/or products for use under this contract. As specified in Specification Section 1.09, all materials, appliances, and types of construction shall be in accordance with the Technical Specifications.**
8. **Hinterland Group respectfully requests that Global Materials Company be approved as a CIPP liner manufacturer. Global specs are attached for your review. The specifications for CIPP liner materials and manhole lining materials do not specify specific manufacturers and/or products for use under this contract. As specified in Specification Section 1.09, all materials, appliances, and types of construction shall be in accordance with the Technical Specifications.**
9. **Is there a plan holders list for this project? Please see minutes with organizations present at the pre-bid meeting. The City of St. Pete Beach cannot see who has viewed the bid documents.**
10. **Do you have a plan holders list you could provide me for the above referenced bid? Please see minutes with organizations present at the pre-bid meeting. The City of St. Pete Beach cannot see who has viewed the bid documents.**
11. **Will the Owner/Engineer please provide a copy of the current plan holders list? Please see minutes with organizations present at the pre-bid meeting. The City of St. Pete Beach cannot see who has viewed the bid documents.**
12. **Will the Owner/Engineer please provide the anticipated annual spending for this contract to include each rehab division? Estimated $1,000,000 to $2,500,000 annually total.**
13. **Will the Engineer/Owner please provide previous itemized bid tabulation or contract pricing for each division/ contract? The City of St. Pete Beach does not have bid tabulations within the last 5 years.**
14. **Will the Owner/Engineer provide example work orders from previous contract periods? No.**

15. **Will the Owner provide a disposal site for pipe cleaning debris at no cost to the Contractor? Yes.**
16. **Will the Contractor be allowed to increase pricing from year 1 to subsequent years? Contract prices to remain firm through the first three contract years. Sixty days prior to the contract renewal date, contract/vendor may request a price adjustment.**
17. **Prebid question: Bid bond required? Yes, 5% of the total bid price.**
18. **Prebid question: Can previous bid tabulations for this project be shared? The City of St. Pete Beach does not have bid tabulations within the last 5 years.**
19. **Prebid question: Is there anticipated work already prepared? Bid form reflects anticipated work. City is underway with cleaning/televising entire wastewater collection system to analyze current conditions and will reprioritize if needed once that project is complete (estimated Dec 2026).**
20. **Prebid question: Anticipated annual budget? Estimated $1,000,000 to $2,500,000 annually.**
21. **Prebid question: Is there a self-performed percentage requirement? Yes, 100% Performance Bond.**
22. **Prebid question: Does the City need to be listed for proof of insurance? Yes**
23. **Prebid question: Can you provide the address exactly how it needs to be for the COIs?**
    City of St. Pete Beach
    155 Corey Avenue
    St. Pete Beach, FL 33706

155 Corey Avenue
St. Pete Beach, FL 33706-1839
www.stpetebeach.org

ADDENDUM 2

Wastewater System Rehabilitation Services

Issued 3/27/2026

*Sealed bids must be received by **9:00 AM on 04/08/2026** electronically via Bonfire. Bids received after the deadline will not be accepted. They will be publicly opened and read at **10:00 AM on 04/08/2026**. All bidders are invited to attend this bid Opening.*

Addendum 2 includes:

Questions and Answers

Questions and Answers:

1. **Is there a form to fill out for our sub-contractor for the bid submittal? Do I need to add anything for them with our bid? You are welcome to list them as a sub-contractor in your proposal, but there is no form. The sub-contractor is the contractor's financial responsibility.**

2. **Please clarify the Period of Performance in the General Contract Terms. This states base scope target completion of January 2027 while other parts of the RFP specify a three year contract. Three-year contract with options for up to (2) 1-year extensions for ongoing work.**

3. **Will any bonding be required? Yes, 5% total bid cost.**

4. **How will work be assigned on this contract? Will multiple contractors be assigned to a single project? Multiple contractors may be assigned to a single project, depending on scope required and contractor's abilities.**

5. **Is there an estimated yearly budget for this contract? $1M to $2.5M annually.**

6. **Are there any previous detailed, itemized bid tabs available for this or other similarly bid projects? Please see minutes with organizations present at the pre-bid meeting. The City of St. Pete Beach cannot see who has viewed the bid documents.**

7. **Is Item PL-50, (Grout, Gal) to be used in conjunction with items PL-47 through PL-49? Yes, please refer to the technical specifications. This pay item is applicable only in conjunction with Pay Items 47 through 49.**

8. **Can the owner add a Lateral Grouting, Per EA, Bid Item? Yes, pay item 55 has been added under pipe lining.**

9. **Does the owner have an annual budget for the Wastewater System Pipe (CIPP) Lining portion? No specific budget per portion.**

10. **In the addendum it says we need a 5% Bid Bond. Do you have a form to provide, or can our Surety use there's? We do not have a form. This would come from your surety company for the bond.**

11. **Several vendors have asked about using specific material manufacturers. The specifications for manhole lining materials do not specify specific manufacturers and/or products for use under this contract. As specified in Specification Section 1.09, all materials, appliances, and types of construction shall be in accordance with the Technical Specifications. Accordingly, bidders may base their bids on any manhole lining system that meets the performance and technical requirements of the specifications. Any proposed material or product will be subject to review for compliance with the Contract Documents through the submittal process after award.**

12. **In Addendum 1, there are contradicting answers for the bid bond needing to be submitted. On page 3 after the questions asked during the pre-bid, it states that it is bondable based on the project at that time, meaning a bid bond wasn't required to be submitted. On page 4 and 5, it states a bid bond of 5% is required to be submitted. Can you please clarify if a bid bond is required to be submitted with the proposal, and if so, what percentage is required? Discussion after the meeting led the City of St. Pete Beach to require a bid bond of 5% total bid cost, which must be submitted with the proposal.**

13. **Are alternate products being considered if they meet specification requirements of the proposed products? The specifications for manhole lining materials do not specify specific manufacturers and/or products for use under this contract. As specified in Specification Section 1.09, all materials, appliances, and types of construction shall be in accordance with the Technical Specifications. Accordingly, bidders may base their bids on any manhole lining system that meets the performance and technical requirements of the specifications. Any proposed material or product will be subject to review for compliance with the Contract Documents through the submittal process after award.**

14. **Do we have to fill out each individual section of the bid form, or can we bid the section that only pertains to our capabilities? See IV. General Contract Terms: It is not mandatory to submit a proposal for every item listed. A bidder may bid on any, all, or none of the items.**

15. **What is the anticipated work order size and how many work orders are anticipated to be issued annually? City anticipates issuing 3 purchase orders annually, 1 for each scope (pipe lining, point repairs, manhole rehabilitation), with multiple work orders per purchase order.**

16. **Will the work orders be issued in geographically grouped areas, or will the work be scattered across the City? Work orders will be issued in geographically grouped areas.**

17. **The RFP page 6 states "Vendors may submit proposals for all, some, or only one of the categories" and later "bidder may bid on any, all, or none of the items." Please confirm if bidders are required to bid all items with a category (Manhole Rehabilitation, Pipe Lining, and/or Point Repairs). You may bid certain line items only.**

18. **What are the allowable working hours? Standard work hours shall be from 7:30 AM until 6:00 PM, Monday through Saturday. No work shall take place on Sundays or on official City holidays without prior approval by the City Manager or designee at least 1 week prior to the scheduled work. A list of current official City holidays can be found on the City's Human Resources website at http://www.stpetebeach.org/hr/holidays.html. Contractor will coordinate scheduling of work with the City's Project Manager and City's Inspector.**

19. **Pipe Lining Item 15 for 6" Diameter CIPP shows a thickness of 6.0mm. This is not feasible for 6" diameter pipe and industry standard is 4.5mm. Please confirm 4.5mm will be acceptable for 6" diameter CIPP. 4.5mm is acceptable. This is acceptable. Pay item 15 has been updated accordingly.**

20. Regarding Mobilization bid item, please confirm this will be paid for each work order, and will not be paid only once per year. Please refer to the technical specifications. The quantity of mobilization to be paid for under this item shall be measured as one unit each (EA) per job assignment. One (1) mobilization will be allowed for each job assignment, project, or work order no matter how many times the equipment must be relocated by loading, transporting, and unloading, or under its own power to complete the job assignment or project. Payment for mobilization shall not exceed 10 percent (10%) of the total Contract cost unless the Contractor can prove to the City that his actual mobilization cost exceeds 10 percent (10%).

21. Section 2 Pay Item Descriptions for Mobilization includes "establishment of Subcontractor's temporary offices, buildings, …" Please confirm a temporary office or building is not required. Not required.

22. Section 2 Pay Item Descriptions for Bypass Pumping Setup & Operation states this "Pay Item is applicable on projects or repairs that have high flow or require an over night by pass operation." What is considered "high flow"? Will this item be paid for a "typical" bypass for an 8" diameter CIPP installation? Please elaborate on the requirements for this item and how it will be paid. These pay items apply when bypass pumping is needed to complete the repair without overflows. Pay item 26 would be used for bypass for an 8" diameter installation. The quantity to be measured for payment under this Pay Item will be the actual number of by-pass pumping set ups and operations, per part of day, required by the Engineer in the work. The minimum measurement for this pay item is eight (8) hours or 0.333 days and is measured from the time that the sewage is actually by-passed. This eight (8) hour minimum (0.333 days) includes full compensation for set up and operation for up to the first eight (8) hour period. Additional time will be in tenths of the day or twenty-four (24) hour period. The quantities determined shall be paid per day (DAY) or portion of day of by-pass pumping set up and operation.

23. The measurement for bypass also states the minimum measurement is 8 hours and will be paid for the first 8 hour period with additional time in tenths of a day. Please explain how this will be paid for say a 10 hour day. For example with $1,000/EA Setup and $500/Day: If a 10 hour day is being bypassed, will the contractor be paid the $1000 setup plus 2 hours (10-8 hours) / 24 hours x $1000 = $83.33 + $500 for a total of $1,583.33? In this scenario, payment would be total $1,216.50. ($1,000 setup + $500 operation x (0.333 day + 0.1 day))

24. Section 2 Pay Item Descriptions for CIPP Main Liner include cleaning and pre/post CCTV inspection. However, there are bid items for Normal Cleaning and Specialty Cleaning. Please confirm cleaning and pre CCTV inspection to prep the pipe for CIPP lining will be paid under the Normal Cleaning and/or Specialty Cleaning items, and is not incidental to CIPP Main Liner items. Cleaning and pre CCTV Cleaning and pre-CCTV inspection to prep the pipe for CIPP is incidental to CIPP main liner items. Payment shall include all materials, labor, equipment, and supplies necessary for the CIPP Main Liner installation, and specifically includes, but is not limited to, pre-rehabilitation CCTV inspection, liner sampling and storage of samples for testing, sealing liner connections at manholes, matching existing manhole lining to the CIPP

liner, matching existing flow channels and surfacing to the liner to minimize turbulence, cleaning, removal and disposal of all sand, rubble, deposits, and other accumulated debris after liner installation, post-rehabilitation CCTV inspection video and log, restoration, and all other appurtenant work as specified. Pay items 39-46 are for services requiring cleaning only.

25. Section 2 Pay Item Descriptions for Chemical Sealing of Host Pipe states this item will be paid for each pipe "regardless of…the number of infiltration points sealed." This currently reads that a pipe with one single joint with infiltration will be paid the same as a different pipe with 80 joints that all need to be sealed. Bidders have no way of knowing how many joints may be leaking on a particular segment which could drastically skew the pricing. Would you please consider revising this item to include Chemical Sealing of Host Pipe per Joint or per Service Connection? This pay item is to provide a cost for sealing excessively leaking infiltration points prior to lining of a host pipe. Revising this to a per-seal price would introduce the need to verify the number of leaking joints prior to approving a pay application following execution of the work. For tracking purposes, a flat-fee price will remain.

26. Section 2 Pay Item Descriptions for Service Reconnection states each service shall be grouted 18-inches into the lateral. Will this remain a requirement? If so, would you please consider adding Service Reconnection bid items per pipe diameter as there is substantial cost difference in grouting laterals per main diameter? Main diameter should not be a big factor, the lateral diameters are fairly consistent and the annular space volume will be dependent on the lateral diameter, not the main diameter. Pay item to remain as is.

27. The CIPP Spec (Section 21), paragraph 21.11.02 states up to 10% of the installed liners may be tested for exfiltration per ASTM F1216, Section 8.2 which is a hydrostatic pressure test. This test is not applicable to any line with services and adds unnecessary cost to the project as any potential defects will be verified via the post-rehab CCTV inspection. Would you please consider removing this unnecessary requirement which will ultimately create the most competitive pricing for the Owner? Section 21.11.02 specifies the testing is to be performed prior to any service lateral reconnections. Pay item to remain as-is.

28. Also, please accept SAK Construction, LLC as Installer and Pipenology, LLC as Manufacturer of CIPP Liners, in regards to the above referenced project. Per prequalification requirements on pages 1 and 2 of the Section 21 – CIPP Specification, please see attached documents for your review: SAK Company Information, CIPP Completed Project List, Pipenology CIPP Liner Submittal. The specifications for manhole lining materials do not specify specific manufacturers and/or products for use under this contract. As specified in Specification Section 1.09, all materials, appliances, and types of construction shall be in accordance with the Technical Specifications. Accordingly, bidders may base their bids on any manhole lining system that meets the performance and technical requirements of the specifications. Any proposed material or product will be subject to review for compliance with the Contract Documents through the submittal process after award.

29. **Can you please specify whether the minimum CIPP thicknesses are pre- or post- installation measurements? Post-installation (finished-in-place) thickness.**

30. **Will the Owner provide water, at no cost to the contractor, for work requiring water? Yes.**

155 Corey Avenue
St. Pete Beach, FL 33706-1839
www.stpetebeach.org

ADDENDUM 3

Wastewater System Rehabilitation Services

Issued 3/30/2026

*Sealed bids must be received by **9:00 AM on 04/08/2026** electronically via Bonfire. Bids received after the deadline will not be accepted. They will be publicly opened and read at **10:00 AM on 04/08/2026**. All bidders are invited to attend this bid Opening.*

Addendum 3 includes:

Questions and Answers

Questions and Answers:

Do we add all documents including the bid for (Price) to one PDF for submission? You may submit more than one document. They do not have to all be on one PDF.

For pay items 34-36 and pay items 40-42, the units are EA. Can you provide the depths of the manholes under "EACH" since this will significantly affect the price? Or can you change the units to VF as you have on the pay items for Additional MH Coating? 48" diameter manhole depths range from approx. 2 to 14 ft, with the majority between 4 and 6 ft.

EXHIBIT "C"

Vendor Bid/Proposal

(Place Vendor's Bid/Proposal Behind this Page)



Ref. #: St. Pete Beach Wastewater System Rehabilitation Systems 2026
Wastewater System Rehabilitation Systems

Company Contact

657 South Drive, Suite 401

Miami, FL 33166

Contact Name: Karlos Ramos

Date: April 7, 2026

Email: estimating@flotechllc.com

Tel: (866) 299-3323

VI. CONTRACTOR'S PROPOSAL SUBMITTAL

The company that is submitting a proposal declares that it has extensive experience in Wastewater System Rehabilitation Services, including manhole rehabilitation, pipe lining and point repairs.

The undersigned, as Proposer, hereby declares that the only person or persons interested in the Proposal as principal or principals are named herein, and that no person other than herein mentioned has any interest in the Proposal or in the Agreement to be entered into; that this Proposal or Agreement is made without connection with any other person, company, or parties making a Proposal; and that it is in all respects fair and in good faith without collusion or fraud.

The Proposer further declares that they have examined the site of the work and informed themselves fully in regard to all conditions pertaining to the place where the work is to be done; that they have examined the Plans and Specifications for the work and Contract Documents relative thereto, and have read all special provisions furnished prior to the opening of proposals; and that they have satisfied themselves relative to the materials to be supplied and work to be performed.

The Proposer proposes and agrees, if the Proposal is accepted, to contract with the City of St. Pete Beach, Florida, in the form of an Agreement specified for **"Wastewater System Rehabilitation Services"** in St. Pete Beach, Florida, in full and complete accordance with the shown, noted, described, and reasonably intended requirements of the Plans, Specifications, and Contract Documents, to the full and entire satisfaction of the City of St. Pete Beach, Florida.

The successful Proposer shall be required to utilize the template Agreement in this Request for Proposals (RFP) and any questions regarding the Agreement must be addressed during the RFP process before submittal. The City reserves the right to respond or not respond to questions in the form of an addendum.

The Proposer proposes to furnish all materials, equipment, labor, and perform the work submitted in their proposal schedule for the City of St. Pete Beach **"Wastewater System Rehabilitation Services."**

COMPANY: Flotech Environmental, LLC DATE: 04/07/2026

ADDRESS: 657 South Drive, Suite 401, Miami, FL 33166 PHONE: 866-299-3323

PROPOSER: _____ NAME: Jose L. Ferre, Managing Member

(SIGNATURE) (PRINT NAME & TITLE)

STATE OF FLORIDA
COUNTY OF ~~Pinellas~~ Miami-Dade

The foregoing instrument was sworn to (or affirmed), subscribed, and acknowledged before me by means of ☑ physical presence or ☐ online notarization, this 7th day of April, 2026, by Jose L. Ferre, who is personally known to me or has produced _____ as identification.

(SEAL)

YINET QUINTANA
Notary Public - State of Florida
Commission # HH 597838
My Comm. Expires Sep 30, 2028
Bonded through National Notary Assn.

Yinet Quintana
Notary Public – State of Florida

Yinet Quintana
(Print, Type, Stamp, or Commissioned Name of Notary Public)

SUBMIT PROPOSAL TO: Electronically via Bonfire only

VII. PUBLIC ENTITY CRIMINAL AFFIDAVIT

SWORN STATEMENT – PUBLIC ENTITY CRIMES

PURSUANT TO § 287.133 (3)(a), FLORIDA STATUTES, ON PUBLIC ENTITY CRIMES
THE FORM MUST BE SIGNED AND SWORN TO IN THE PRESENCE OF A NOTARY PUBLIC OR OTHER OFFICIAL AUTHORIZED TO ADMINISTER OATHS.

1. This sworn statement is submitted to: City of St. Pete Beach

by: Jose L. Ferre, Managing Member
(Print individual's name and title)

for: Flotech Environmental, LLC
(Print name of entity submitting sworn statement)

at: 657 South Drive, Suite 401, Miami, FL 33166
(Business address)

and (if applicable), its Federal Employer Identification Number (FEIN):

45-4556187
(FEIN)
or, if the entity has no FEIN, include the Social Security Number:

N/A
(SSN)

by the individual signing this sworn statement: _____
(Signature)

2. I understand that a "public entity crime" as defined in § 287.133 (1)(g), Fla. Stat., means a violation of any State or Federal law by a person with respect to and directly related to the transaction of business with any public entity or with an agency or political subdivision of any other state or of the United States including, but not limited to, any proposal or contract for goods or services, any lease for real property, or any contract for the construction or repair of a public building or public work, involving antitrust, fraud, theft, bribery, collusion, racketeering, conspiracy, or material misrepresentation.

3. I understand that "convicted" or "conviction" as defined in § 287.133 (1)(b), Fla. Stat., means a finding of guilt or a conviction of public entity crime with or without an adjudication of guilt in any Federal or State trial court of record relating to charges brought by indictment or information after July 1, 1989, as a result of a jury verdict, non-jury trial, or entry of a plea of guilty or nolo contendere.

4. I understand that an "affiliate" as defined in § 287.133 (1)(a), Fla. Stat., means:
   a. A predecessor or successor of a person convicted of a public entity crime or
   b. An entity under the control of any natural person who is active in the management of the entity and who has been convicted of a public entity crime. The term "affiliate" includes those officers, directors, executives, partners, shareholders, employees, members, and agents who are active in the management of an affiliate. The ownership by one (1) person of shares constituting a controlling interest in another person or a pooling of equipment or income among persons when not for fair market value under the arm's length agreement, shall be a prima facie case that one (1) person controls another person. A person who knowingly enters into a joint venture with a person who has been convicted of a public crime in Florida during the preceding thirty-six (36) months shall be considered an

affiliate.

5. I understand that a "person" as defined in Section 287.133 (1)(e), Fla. Stat., means any natural person or any entity organized under the laws of any state or of the United States with the legal power to enter into a binding contract and which proposals or applies to proposal on contracts let by a public entity, or which otherwise transacts or applies to transact business with a public entity. The term "person" includes those officers, directors, executives, partners, shareholders, employees, members, and agents who are active in management of an entity.

6. Based on information and belief, the **statement which I have marked below is true** in relation to the entity submitting this sworn statement (indicate which statement applies).

☑ Neither the entity submitting this sworn statement, nor any of its officers, directors, executives, partners, shareholders, employees, members, or agents who are active in the management of the entity nor any affiliate of the entity has been charged with and convicted of a public entity crime subsequent to July 1, 1989.

☐The entity submitting this sworn statement or one (1) or more of its officers, directors, executives, partners, shareholders, employees, members, or agents who are active in the management of the entity or an affiliate of the entity has been charged with and convicted of a public entity crime subsequent to July 1, 1989.

☐The entity submitting this sworn statement or one (1) or more of its officers, directors, executives, partners, shareholders, employees, members, or agents who are active in the management of the entity or an affiliate of the entity has been charged with and convicted of a public entity crime subsequent to July 1, 1989. However, there has been a subsequent proceeding before a Hearing Office of the State of Florida, Division of Administrative Hearings and the Final Order entered by the Hearing Officer determined that it was not in the public interest to place the entity submitting this sworn statement on the convicted vendor list (attach a copy of the final order).

I UNDERSTAND THAT THE SUBMISSION OF THIS FORM TO THE CONTRACTING OFFICE FOR THE PUBLIC ENTITY IDENTIFIED IN PARAGRAPH 1 ABOVE IS FOR THE PUBLIC ENTITY ONLY AND THAT THIS FORM IS VALID THROUGH DECEMBER 31 OF THE CALENDAR YEAR IN WHICH IT IS FILED. I ALSO UNDERSTAND THAT I AM REQUIRED TO INFORM THE PUBLIC ENTITY PRIOR TO ENTERING INTO A CONTRACT IN EXCESS OF THE THRESHOLD AMOUNT PROVIDED IN SECTION 287.017, FLORIDA STATUTES, FOR CATEGORY TWO OF ANY CHANGE IN THE INFORMATION CONTAINED IN THIS FORM.

STATE OF FLORIDA
COUNTY OF ~~Pinellas~~ Miami-Dade

The foregoing instrument was sworn to (or affirmed), subscribed, and acknowledged before me by means of ☑ physical presence or ☐ online notarization, this 7th day of April, 2026, by Jose L. Ferre, who is personally known to me or has produced _____ as identification.

(SEAL)

YINET QUINTANA
Notary Public - State of Florida
Commission # HH 597838
My Comm. Expires Sep 30, 2028
Bonded through National Notary Assn.

Yinet Quintana
Notary Public – State of Florida

Yinet Quintana
(Print, Type, Stamp, or Commissioned Name of Notary Public)

VIII. NON-COLLUSION AFFADAVIT

STATE OF Florida COUNTY OF Pinellas

I state that I Jose L. Ferre, Managing Member (Name and Title) of Flotech Environmental, LLC (Name of Firm),

I am authorized to make this affidavit on behalf of my firm and its owner, directors and officers. I am the person responsible in my firm for the price(s) and amount(s) of this Response, and the preparation of the Response. I state that:

1. The price(s) and amount(s) of this Response have been arrived at independently and without consultation, communication or agreement with any other Provider, potential provider, Proposal, or potential Proposal.

2. Neither the price(s) nor the amount(s) of this Response, and neither the approximate price(s) nor approximate amount(s) of this Response, have been disclosed to any other firm or person who is a Provider, potential Provider, Proposal, or potential Proposal, and they will not be disclosed before Proposal opening.

3. No attempt has been made or will be made to induce any firm or persons to refrain from submitting a Response for this contract, or to submit a price(s) higher that the prices in this Response, or to submit any intentionally high or noncompetitive price(s) or other form of complementary Response.

4. The Response of my firm is made in good faith and not pursuant to any agreement or discussion with, or inducement from, any firm or person to submit a complementary or other noncompetitive Response.

5. Flotech Environmental, LLC its affiliates, subsidiaries, officers, director, and employees (Name of Firm) are not currently under investigation, by any governmental agency and have not in the last three years been convicted or found liable for any act prohibited by State or Federal law in any jurisdiction, involving conspiracy or collusion with respect to Proposal, on any public contract, except as follows:

I state that I and the named firm understand and acknowledge that the above representations are material and important, and will be relied on by the State of Florida for which this Response is submitted. I understand and my firm understands that any misstatement in this affidavit is, and shall be treated as, fraudulent concealment from the State of Florida of the true facts relating to the submission of responses for this contract.

Name of Organization: Flotech Environmental, LLC Signed By: _____

Print Name: Jose L. Ferre

The foregoing instrument was sworn to (or affirmed), subscribed, and acknowledged before me by means of ☒ physical presence or ☐ online notarization, this 7th day of April, 2026, by Jose L. Ferre, who is personally known to me or has produced _____ as identification.

(SEAL)

YINET QUINTANA
Notary Public - State of Florida
Commission # HH 597838
My Comm. Expires Sep 30, 2028
Bonded through National Notary Assn.

_____
Notary Public – State of Florida

Yinet Quintana
(Print, Type, Stamp, or Commissioned Name of Notary Public)

Document A310™ – 2010

Conforms with The American Institute of Architects AIA Document 310

Bid Bond

CONTRACTOR:
(Name, legal status and address)

FloTech Environmental, LLC
657 South Drive, Suite 401
Miami Springs, FL 33166

SURETY:
(Name, legal status and principal place of business)

United States Fire Insurance Company
305 Madison Avenue
Morristown, NJ 07960

OWNER:
(Name, legal status and address)

City of St. Pete Beach
155 Corey Ave
St. Pete Beach, FL 33706

BOND AMOUNT: $ 5%

Five Percent of Amount Bid

PROJECT:
(Name, location or address, and Project number, if any)

Wastewater System Rehabilitation Services

This document has important legal consequences. Consultation with an attorney is encouraged with respect to its completion or modification.

Any singular reference to Contractor, Surety, Owner or other party shall be considered plural where applicable.

The Contractor and Surety are bound to the Owner in the amount set forth above, for the payment of which the Contractor and Surety bind themselves, their heirs, executors, administrators, successors and assigns, jointly and severally, as provided herein. The conditions of this Bond are such that if the Owner accepts the bid of the Contractor within the time specified in the bid documents, or within such time period as may be agreed to by the Owner and Contractor, and the Contractor either (1) enters into a contract with the Owner in accordance with the terms of such bid, and gives such bond or bonds as may be specified in the bidding or Contract Documents, with a surety admitted in the jurisdiction of the Project and otherwise acceptable to the Owner, for the faithful performance of such Contract and for the prompt payment of labor and material furnished in the prosecution thereof; or (2) pays to the Owner the difference, not to exceed the amount of this Bond, between the amount specified in said bid and such larger amount for which the Owner may in good faith contract with another party to perform the work covered by said bid, then this obligation shall be null and void, otherwise to remain in full force and effect. The Surety hereby waives any notice of an agreement between the Owner and Contractor to extend the time in which the Owner may accept the bid. Waiver of notice by the Surety shall not apply to any extension exceeding sixty (60) days in the aggregate beyond the time for acceptance of bids specified in the bid documents, and the Owner and Contractor shall obtain the Surety's consent for an extension beyond sixty (60) days.

If this Bond is issued in connection with a subcontractor's bid to a Contractor, the term Contractor in this Bond shall be deemed to be Subcontractor and the term Owner shall be deemed to be Contractor.

When this Bond has been furnished to comply with a statutory or other legal requirement in the location of the Project, any provision in this Bond conflicting with said statutory or legal requirement shall be deemed deleted herefrom and provisions conforming to such statutory or other legal requirement shall be deemed incorporated herein. When so furnished, the intent is that this Bond shall be construed as a statutory bond and not as a common law bond.

Signed and sealed this 8th day of April, 2026

(Witness) Yinet Quintana

FloTech Environmental, LLC
(Principal) *(Seal)*

By:
(Title) Jose L. Ferre, Managing Member

(Witness) Cindy Lyons

United States Fire Insurance Company
(Surety) *(Seal)*

By:
(Title) Joseph Penichet Nielson Attorney-in-Fact

S-0054/AS 8/10

POWER OF ATTORNEY
UNITED STATES FIRE INSURANCE COMPANY
PRINCIPAL OFFICE - MORRISTOWN, NEW JERSEY

00927

KNOW ALL MEN BY THESE PRESENTS: That United States Fire Insurance Company, a corporation duly organized and existing under the laws of the state of Delaware, has made, constituted and appointed, and does hereby make, constitute and appoint:

Ian A. Nipper, David Russell Hoover, Joseph Penichet Nielson, Charles David Nielson,
Charles Jackson Nielson, Shawn Alan Burton, Jarrett Merlucci

each, its true and lawful Attorney(s)-In-Fact, with full power and authority hereby conferred in its name, place and stead, to execute, acknowledge and deliver: Any and all bonds and undertakings of surety and other documents that the ordinary course of surety business may require, and to bind United States Fire Insurance Company thereby as fully and to the same extent as if such bonds or undertakings had been duly executed and acknowledged by the regularly elected officers of United States Fire Insurance Company at its principal office, in amounts or penalties: **Unlimited**

This Power of Attorney limits the act of those named therein to the bonds and undertakings specifically named therein, and they have no authority to bind United States Fire Insurance Company except in the manner and to the extent therein stated.

This Power of Attorney is granted pursuant to Article IV of the By-Laws of United States Fire Insurance Company as now in full force and effect, and consistent with Article III thereof, which Articles provide, in pertinent part:

> Article IV, Execution of Instruments - Except as the Board of Directors may authorize by resolution, the Chairman of the Board, President, any Vice-President, any Assistant Vice President, the Secretary, or any Assistant Secretary shall have power on behalf of the Corporation:
>
> (a) to execute, affix the corporate seal manually or by facsimile to, acknowledge, verify and deliver any contracts, obligations, instruments and documents whatsoever in connection with its business including, without limiting the foregoing, any bonds, guarantees, undertakings, recognizances, powers of attorney or revocations of any powers of attorney, stipulations, policies of insurance, deeds, leases, mortgages, releases, satisfactions and agency agreements;
> (b) to appoint, in writing, one or more persons for any or all of the purposes mentioned in the preceding paragraph (a), including affixing the seal of the Corporation.
>
> Article III, Officers, Section 3.11, Facsimile Signatures. The signature of any officer authorized by the Corporation to sign any bonds, guarantees, undertakings, recognizances, stipulations, powers of attorney or revocations of any powers of attorney and policies of insurance issued by the Corporation may be printed, facsimile, lithographed or otherwise produced. In addition, if and as authorized by the Board of Directors, dividend warrants or checks, or other numerous instruments similar to one another in form, may be signed by the facsimile signature or signatures, lithographed or otherwise produced, of such officer or officers of the Corporation as from time to time may be authorized to sign such instruments on behalf of the Corporation. The Corporation may continue to use for the purposes herein stated the facsimile signature of any person or persons who shall have been such officer or officers of the Corporation, notwithstanding the fact that he may have ceased to be such at the time when such instruments shall be issued.

IN WITNESS WHEREOF, United States Fire Insurance Company has caused these presents to be signed and attested by its appropriate officer and its corporate seal hereunto affixed this 8th day of April, 2025.

UNITED STATES FIRE INSURANCE COMPANY

Matthew E. Lubin, President

State of New Jersey }
County of Morris }

On this 8th day of April, 2025, before me, a Notary public of the State of New Jersey, came the above named officer of United States Fire Insurance Company, to me personally known to be the individual and officer described herein, and acknowledged that he executed the foregoing instrument and affixed the seal of United States Fire Insurance Company thereto by the authority of his office.

ETHAN SCHWARTZ
NOTARY PUBLIC
STATE OF NEW JERSEY
MY COMMISSION EXPIRES 6/25/2029
COMMISSION: #50223171

Ethan Schwartz (Notary Public)

I, the undersigned officer of United States Fire Insurance Company, a Delaware corporation, do hereby certify that the original Power of Attorney of which the foregoing is a full, true and correct copy is still in force and effect and has not been revoked.

IN WITNESS WHEREOF, I have hereunto set my hand and affixed the corporate seal of United States Fire Insurance Company on the 8th day of April 20 26

UNITED STATES FIRE INSURANCE COMPANY

Michael C. Fay, Senior Vice President

CONTACT INFORMATION: Bond Verifications: surety@cfins.com / Claims: SuretyClaimsSupport@cfins.com

Client#: 1924855 FLOTEENV

ACORD™ CERTIFICATE OF LIABILITY INSURANCE

DATE (MM/DD/YYYY) 4/07/2026

THIS CERTIFICATE IS ISSUED AS A MATTER OF INFORMATION ONLY AND CONFERS NO RIGHTS UPON THE CERTIFICATE HOLDER. THIS CERTIFICATE DOES NOT AFFIRMATIVELY OR NEGATIVELY AMEND, EXTEND OR ALTER THE COVERAGE AFFORDED BY THE POLICIES BELOW. THIS CERTIFICATE OF INSURANCE DOES NOT CONSTITUTE A CONTRACT BETWEEN THE ISSUING INSURER(S), AUTHORIZED REPRESENTATIVE OR PRODUCER, AND THE CERTIFICATE HOLDER.

IMPORTANT: If the certificate holder is an ADDITIONAL INSURED, the policy(ies) must have ADDITIONAL INSURED provisions or be endorsed. If SUBROGATION IS WAIVED, subject to the terms and conditions of the policy, certain policies may require an endorsement. A statement on this certificate does not confer any rights to the certificate holder in lieu of such endorsement(s).

PRODUCER	CONTACT NAME: Yomie Gutierrez	
USI Insurance Services, LLC/CL 201 Alhambra Circle, Suite 900 Coral Gables, FL 33134-5108 305 669-6000	PHONE (A/C, No, Ext): 305 669-6000	FAX (A/C, No):
	E-MAIL ADDRESS: yomie.gutierrez@usi.com	
	INSURER(S) AFFORDING COVERAGE	NAIC #
	INSURER A : Ironshore Specialty Insurance Co	25445
INSURED Flotech Environmental, LLC 657 South Dr Ste #401 Miami Springs, FL 33166-5926	INSURER B : Hamilton Ins Designated Activity Co	1780
	INSURER C : Federal Insurance Company	20281
	INSURER D : Starr Surplus Lines Insurance Company	13604
	INSURER E :	
	INSURER F :	

COVERAGES **CERTIFICATE NUMBER:** **REVISION NUMBER:**

THIS IS TO CERTIFY THAT THE POLICIES OF INSURANCE LISTED BELOW HAVE BEEN ISSUED TO THE INSURED NAMED ABOVE FOR THE POLICY PERIOD INDICATED. NOTWITHSTANDING ANY REQUIREMENT, TERM OR CONDITION OF ANY CONTRACT OR OTHER DOCUMENT WITH RESPECT TO WHICH THIS CERTIFICATE MAY BE ISSUED OR MAY PERTAIN, THE INSURANCE AFFORDED BY THE POLICIES DESCRIBED HEREIN IS SUBJECT TO ALL THE TERMS, EXCLUSIONS AND CONDITIONS OF SUCH POLICIES. LIMITS SHOWN MAY HAVE BEEN REDUCED BY PAID CLAIMS.

INSR LTR	TYPE OF INSURANCE	ADDL INSR	SUBR WVD	POLICY NUMBER	POLICY EFF (MM/DD/YYYY)	POLICY EXP (MM/DD/YYYY)	LIMITS	
A	X COMMERCIAL GENERAL LIABILITY CLAIMS-MADE X OCCUR X BI/PD Ded:25000 GEN'L AGGREGATE LIMIT APPLIES PER: POLICY X PRO-JECT LOC OTHER:	X	X	IEPUW0031131601	09/08/2025	09/08/2026	EACH OCCURRENCE DAMAGE TO RENTED PREMISES (Ea occurrence) MED EXP (Any one person) PERSONAL & ADV INJURY GENERAL AGGREGATE PRODUCTS - COMP/OP AGG $	$2,000,000 $500,000 $25,000 $2,000,000 $4,000,000 $4,000,000 $
C	AUTOMOBILE LIABILITY X ANY AUTO OWNED AUTOS ONLY SCHEDULED AUTOS X HIRED AUTOS ONLY X NON-OWNED AUTOS ONLY	X	X	54326340	09/08/2025	09/08/2026	COMBINED SINGLE LIMIT (Ea accident) BODILY INJURY (Per person) BODILY INJURY (Per accident) PROPERTY DAMAGE (Per accident) $	$1,000,000 $ $ $ $
B	UMBRELLA LIAB X OCCUR X EXCESS LIAB CLAIMS-MADE DED RETENTION $	X	X	ENVXSS46373701	09/08/2025	09/08/2026	EACH OCCURRENCE AGGREGATE $	$4,000,000 $4,000,000 $
C	WORKERS COMPENSATION AND EMPLOYERS' LIABILITY ANY PROPRIETOR/PARTNER/EXECUTIVE OFFICER/MEMBER EXCLUDED? Y/N N (Mandatory in NH) If yes, describe under DESCRIPTION OF OPERATIONS below	N / A	X	54326341	09/08/2025	09/08/2026	X PER STATUTE OTH-ER E.L. EACH ACCIDENT E.L. DISEASE - EA EMPLOYEE E.L. DISEASE - POLICY LIMIT	 $1,000,000 $1,000,000 $1,000,000
D	CE-Inland Marine			ITC12762625	09/08/2025	09/08/2026	$300,000Per/ 300,000 Ag	
A	Pollution Liab	X		IEPUW0031131601	09/08/2025	09/08/2026	$2,000,000Each Occ	
A	Professional Liab			IEPUW0031131601	09/08/2025	09/08/2026	$2,000,000Each Inc	

DESCRIPTION OF OPERATIONS / LOCATIONS / VEHICLES (ACORD 101, Additional Remarks Schedule, may be attached if more space is required)

The General Liability, Automobile Liability and Excess Liability policies include an automatic Additional Insured endorsement that provides Additional Insured status to the City of St. Pete Beach, only when there is a written contract that requires such status, and only with regard to work performed by or on behalf of the named insured. The General Liability and Umbrella Liability policies contains a special endorsement with Primary wording, when required by written contract.

CERTIFICATE HOLDER

City of St. Pete Beach
155 Corey Ave
St. Petersburg Beach, FL 33706

CANCELLATION

SHOULD ANY OF THE ABOVE DESCRIBED POLICIES BE CANCELLED BEFORE THE EXPIRATION DATE THEREOF, NOTICE WILL BE DELIVERED IN ACCORDANCE WITH THE POLICY PROVISIONS.

AUTHORIZED REPRESENTATIVE

© 1988-2015 ACORD CORPORATION. All rights reserved.

CITY OF ST. PETE BEACH					
WASTEWATER SYSTEM REHABILITATION SERVICES					
ITEM	DESCRIPTION	QTY	UNIT	UNIT PRICE	AMOUNT
MANHOLE REHABILITATION					
1	Mobilization	1	EA		$ -
2	Flagmen (Per-Flagmen)	20	HR		$ -
3	Multi Lane, Lane Closures (FDOT Index No. 613)	10	EA/DY		$ -
4	Multi Lane, Intersection (FDOT Index No. 615)	10	EA/DY		$ -
5	Arrow Boards - 5' Minimum Horizontal Size	10	EA/DY		$ -
6	Variable Message Board	10	EA/DY		$ -
7	Concrete Barrier (FDOT Index No. 100)	10	EA/DY		$ -
8	Low Profile Barrier (FDOT Index No. 120)	10	EA/DY		$ -
9	Signs in Work Zones	10	EA/DY		$ -
10	6" Solid line Thermo Plastic - Permanent	200	LF		$ -
11	24" Stop Bar, Solid, Thermo Plastic, Perm.	200	LF		$ -
12	6" Skip line (6'-10' Skip) Thermo Plastic-Perm.	200	LF		$ -
13	Barricades Type III, with Warning Lights	1000	EA/DY		$ -
14	Barricades Type I or II, with Warning Lights	1000	EA/DY		$ -
15	Repair Manhole Bench and Channel	10	EA		$ -
16	Repair Chimney, Adjust/Replace MH Casting- Unpaved	10	EA		$ -
17	Repair Chimney, Adjust/Replace MH Casting- Asphalt Pavement	100	EA		$ -
18	Rebuild Corbel/Chimney for Type B Manhole Casting	10	EA		$ -
19	Furnish Manhole Casting - Type B	10	EA		$ -
20	Furnish Manhole Casting - Type E	30	EA		$ -
21	Severe Manhole Infiltration Elimination	10	EA		$ -
22	Chemical Sealing - Grout	50	GAL		$ -
23	Internal Chimney Sealant - Type B Manhole Casing	5	EA		$ -
24	Internal Chimney Sealant - Type E Manhole Casing	10	EA		$ -
25	Additional Access Cost for Manhole Coating	10	EA		$ -
26	Bypass Pumping Setup - 6-10" diameter	5	EA		$ -
27	Bypass Pumping Setup - 12" -14" diameter	20	EA		$ -
28	Bypass Pumping Setup - 15" to 21" diameter	10	EA		$ -
29	Bypass Pumping Setup - 24" diameter	5	EA		$ -
30	Bypass Pumping Operation - 6"-10" diameter	10	DAY		$ -
31	Bypass Pumping Operation - 12"-14" diameter	50	DAY		$ -
32	Bypass Pumping Operation - 15" to 21" diameter	25	DAY		$ -
33	Bypass Pumping Operation - 24" diameter	15	DAY		$ -
34	Pure Calcium Aluminate Cementitious MH Coating - 48" diameter, Initial	50	EA		$ -
35	Pure Calcium Aluminate Cementitious MH Coating - 60" diameter, Initial	10	EA		$ -
36	Pure Calcium Aluminate Cementitious MH Coating - 72" diameter, Initial	5	EA		$ -
37	Pure Calcium Aluminate Cementitious MH Coating - 48" diameter, Additional	250	VF		$ -
38	Pure Calcium Aluminate Cementitious MH Coating - 60" diameter, Additional	50	VF		$ -
39	Pure Calcium Aluminate Cementitious MH Coating - 72" diameter, Additional	25	VF		$ -
40	Reinforced Polymer MH Coating - 48" diameter, Initial	5	EA		$ -
41	Reinforced Polymer MH Coating - 60" diameter, Initial	5	EA		$ -
42	Reinforced Polymer MH Coating - 72" diameter, Initial	5	EA		$ -
43	Reinforced Polymer MH Coating - 48" diameter, Additional	25	VF		$ -
44	Reinforced Polymer MH Coating - 60" diameter, Additional	25	VF		$ -
45	Reinforced Polymer MH Coating - 72" diameter, Additional	25	VF		$ -
46	Concrete Curb Replacement - Type D	100	LF		$ -
47	Concrete Curb Replacement - Type F	100	LF		$ -
48	Concrete Curb Replacement - Miami Curb	100	LF		$ -
49	Concrete Sidewalk Replacement - 4" Thick	50	SY		$ -
50	Concrete Sidewalk Replacement - 6" Thick	50	SY		$ -
51	Concrete Driveway Replacement - 4" Thick	50	SY		$ -
52	Concrete Driveway Replacement - 6" Thick	50	SY		$ -
53	Inflow Dish	100	EA		$ -
	SUBTOTAL - MANHOLE REHABILITATION				$ -
PIPE LINING					

1	Mobilization	1	EA	$ 5,000.00	$ 5,000.00
2	Flagmen (Per-Flagmen)	20	HR	$ 150.00	$ 3,000.00
3	Multi Lane, Lane Closures (FDOT Index No. 613)	10	EA/DY	$ 750.00	$ 7,500.00
4	Multi Lane, Intersection (FDOT Index No. 615)	10	EA/DY	$ 1,200.00	$ 12,000.00
5	Arrow Boards - 5' Minimum Horizontal Size	10	EA/DY	$ 75.00	$ 750.00
6	Variable Message Board	10	EA/DY	$ 125.00	$ 1,250.00
7	Concrete Barrier (FDOT Index No. 100)	10	EA/DY	$ 50.00	$ 500.00
8	Low Profile Barrier (FDOT Index No. 120)	10	EA/DY	$ 40.00	$ 400.00
9	Signs in Work Zones	10	EA/DY	$ 1,000.00	$ 10,000.00
10	6" Solid line Thermo Plastic - Permanent	200	LF	$ 3.50	$ 700.00
11	24" Stop Bar, Solid, Thermo Plastic, Perm.	200	LF	$ 0.01	$ 2.00
12	6" Skip line (6'-10' Skip) Thermo Plastic-Perm.	200	LF	$ 3.00	$ 600.00
13	Barricades Type III, with Warning Lights	1000	EA/DY	$ 0.01	$ 10.00
14	Barricades Type I or II, with Warning Lights	1000	EA/DY	$ 0.01	$ 10.00
15	CIPP Main Liner 6" Diameter - 4.5 mm thickness	1100	LF	$ 60.00	$ 66,000.00
16	CIPP Main Liner 8" Diameter - 6.0 mm thickness	72200	LF	$ 34.00	$ 2,454,800.00
17	CIPP Main Liner 10" Diameter - 6.0 mm thickness	3600	LF	$ 53.00	$ 190,800.00
18	CIPP Main Liner 12" Diameter - 6.0 mm thickness	2400	LF	$ 72.00	$ 172,800.00
19	CIPP Main Liner 15" Diameter - 7.5 mm thickness	1500	LF	$ 98.00	$ 147,000.00
20	CIPP Main Liner 18" Diameter - 9.0 mm thickness	1800	LF	$ 119.00	$ 214,200.00
21	CIPP Main Liner 21" Diameter - 9.0 mm thickness	2900	LF	$ 154.00	$ 446,600.00
22	CIPP Main Liner 24" Diameter - 10.5 mm thickness	3800	LF	$ 174.00	$ 661,200.00
23	CIPP Main Liner 6" Diameter - Thickness Variance + 1.5mm	300	LF	$ 10.00	$ 3,000.00
24	CIPP Main Liner 8" Diameter - Thickness Variance + 1.5mm	5000	LF	$ 2.00	$ 10,000.00
25	CIPP Main Liner 10" Diameter - Thickness Variance + 1.5mm	1000	LF	$ 10.00	$ 10,000.00
26	CIPP Main Liner 12" Diameter - Thickness Variance + 1.5mm	1000	LF	$ 10.00	$ 10,000.00
27	CIPP Main Liner 15" Diameter - Thickness Variance + 1.5mm	300	LF	$ 10.00	$ 3,000.00
28	CIPP Main Liner 18" Diameter - Thickness Variance + 1.5mm	300	LF	$ 10.00	$ 3,000.00
29	CIPP Main Liner 21" Diameter - Thickness Variance + 1.5mm	300	LF	$ 20.00	$ 6,000.00
30	CIPP Main Liner 24" Diameter - Thickness Variance + 1.5mm	300	LF	$ 20.00	$ 6,000.00
31	Bypass Pumping Setup - 6-10" diameter	5	EA	$ 2,500.00	$ 12,500.00
32	Bypass Pumping Setup - 12" -14" diameter	45	EA	$ 0.01	$ 0.45
33	Bypass Pumping Setup - 15" to 21" diameter	20	EA	$ 0.01	$ 0.20
34	Bypass Pumping Setup - 24" diameter	5	EA	$ 10,000.00	$ 50,000.00
35	Bypass Pumping Operation - 6"-10" diameter	10	DAY	$ 0.01	$ 0.10
36	Bypass Pumping Operation - 12"-14" diameter	90	DAY	$ 0.01	$ 0.90
37	Bypass Pumping Operation - 15" to 21" diameter	40	DAY	$ 0.01	$ 0.40
38	Bypass Pumping Operation - 24" diameter	10	DAY	$ 0.01	$ 0.10
39	Normal Cleaning - 6" and 8" diameter	73300	LF	$ 5.50	$ 403,150.00
40	Normal Cleaning - 10" and 12" diameter	6000	LF	$ 5.25	$ 31,500.00
41	Normal Cleaning - 15" and 18" diameter	3300	LF	$ 5.50	$ 18,150.00
42	Normal Cleaning - 21" and 24" diameter	6700	LF	$ 7.00	$ 46,900.00
43	Specialty Cleaning - 6" and 8" diameter	1000	LF	$ 25.00	$ 25,000.00
44	Specialty Cleaning - 10" and 12" diameter	100	LF	$ 30.00	$ 3,000.00
45	Specialty Cleaning - 15" and 18" diameter	50	LF	$ 50.00	$ 2,500.00
46	Specialty Cleaning - 21" and 24" diameter	100	LF	$ 60.00	$ 6,000.00
47	Chemical Sealing of Host Pipe - 10" diameter and less	30	EA	$ 2,500.00	$ 75,000.00
48	Chemical Sealing of Host Pipe - 12" and 15" diameter	10	EA	$ 2,500.00	$ 25,000.00
49	Chemical Sealing of Host Pipe - 18" to 24" diameter	5	EA	$ 3,500.00	$ 17,500.00
50	Chemical Sealing - Grout	100	GAL	$ 150.00	$ 15,000.00
51	Removal & Sealing of Protruding Service Connections	25	EA	$ 500.00	$ 12,500.00
52	Additional Access Cost Main Liner	25	EA	$ 250.00	$ 6,250.00
53	Service Reconnection	200	EA	$ 1,400.00	$ 280,000.00
54	CIPP Liner Testing	5	EA	$ 1,500.00	$ 7,500.00
55	Lateral Grouting	10	EA	$ 1,000.00	$ 10,000.00
				SUBTOTAL - PIPE LINING	$ 5,493,574.15
POINT REPAIRS					
1	Mobilization for Routine Response	20	EA		$ -
2	Mobilization for Emergency Response	6	EA		$ -

3	Flagmen (Per-Flagmen)	20	HR		$	-
4	Multi Lane, Lane Closures (FDOT Index No. 613)	5	EA/DY		$	-
5	Multi Lane, Intersection (FDOT Index No. 615)	5	EA/DY		$	-
6	Arrow Boards - 5' Minimum Horizontal Size	10	EA/DY		$	-
7	Variable Message Board	10	EA/DY		$	-
8	Concrete Barrier (FDOT Index No. 415)	10	EA/DY		$	-
9	Low Profile Barrier (FDOT Index No. 412)	10	EA/DY		$	-
10	Signs in Work Zones	10	EA/DY		$	-
11	6" Solid line Thermo Plastic - Permanent	200	LF		$	-
12	24" Stop Bar, Solid, Thermo Plastic, Perm.	200	LF		$	-
13	6" Skip line (6'-10' Skip) Thermo Plastic-Perm.	200	LF		$	-
14	Barricades Type III, with Warning Lights	1000	EA/DY		$	-
15	Barricades Type I or II, with Warning Lights	1000	EA/DY		$	-
16	As-Built Survey	5	EA		$	-
17	Excavation, Unsuitable Material	100	CY		$	-
18	Sheeting & Bracing (Left in Place)	500	SF		$	-
19	Sheeting & Bracing, Pipe Trenches (Removed)	2500	SF		$	-
20	Well Point Dewatering Initial - 6'-8' Deep	10	EA		$	-
21	Well Point Dewatering Initial - 8'-10' Deep	10	EA		$	-
22	Well Point Dewatering Initial - 10'-12' Deep	5	EA		$	-
23	Well Point Dewatering Initial - 12'-14' Deep	5	EA		$	-
24	Well Point Dewatering Initial - 14'-16' Deep	3	EA		$	-
25	Well Point Dewatering Initial - > 16' Deep	3	EA		$	-
26	Well Point Dewatering Additional - 6'-8' Deep	200	EA		$	-
27	Well Point Dewatering Additional - 8'-10' Deep	200	EA		$	-
28	Well Point Dewatering Additional - 10'-12' Deep	100	EA		$	-
29	Well Point Dewatering Additional - 12'-14' Deep	100	EA		$	-
30	Well Point Dewatering Additional - 14'-16' Deep	50	EA		$	-
31	Well Point Dewatering Additional - > 16' Deep	50	EA		$	-
32	Jack & Bore 12" x .188" Steel Casing (6" GS)	40	LF		$	-
33	Jack & Bore 16" x .219" Steel Casing (8" GS)	40	LF		$	-
34	Jack & Bore 20" x .250" Steel Casing (10" GS)	40	LF		$	-
35	Jack & Bore 24" x .281" Steel Casing (12" GS)	40	LF		$	-
36	2" Directional Drill HDPE DR 9, IPS OD	200	LF		$	-
37	4" Directional Drill HDPE DR 11, DIPS OD	300	LF		$	-
38	6" Directional Drill HDPE DR 11, DIPS OD	500	LF		$	-
39	8" Directional Drill HDPE DR 11, DIPS OD	500	LF		$	-
40	10" Directional Drill HDPE DR 11, DIPS OD	500	LF		$	-
41	12" Directional Drill HDPE DR 11, DIPS OD	300	LF		$	-
42	6" PVC Pipe, C-900 DR 18 (Gravity Sewer) 0' - 6' Depth	100	LF		$	-
43	6" PVC Pipe, C-900 DR 18 (Gravity Sewer) 6' - 8' Depth	200	LF		$	-
44	6" PVC Pipe, C-900 DR 18 (Gravity Sewer) 8' - 10' Depth	100	LF		$	-
45	6" PVC Pipe, C-900 DR 18 (Gravity Sewer) 10' - 12' Depth	50	LF		$	-
46	6" PVC Pipe, C-900 DR 18 (Gravity Sewer) 12' - 14' Depth	50	LF		$	-
47	6" PVC Pipe, C-900 DR 18 (Gravity Sewer) 14' - 16' Depth	50	LF		$	-
48	6" PVC Pipe, C-900 DR 18 (Gravity Sewer) 16' - 18' Depth	50	LF		$	-
49	8" DI Pipe, CL 350 (Gravity Sewer) 0' - 6' Depth	50	LF		$	-
50	8" DI Pipe, CL 350 (Gravity Sewer) 6' - 8' Depth	100	LF		$	-
51	8" DI Pipe, CL 350 (Gravity Sewer) 8' - 10' Depth	100	LF		$	-
52	8" DI Pipe, CL 350 (Gravity Sewer) 10' - 12' Depth	50	LF		$	-
53	8" DI Pipe, CL 350 (Gravity Sewer) 12' - 14' Depth	50	LF		$	-
54	8" DI Pipe, CL 350 (Gravity Sewer) 14' - 16' Depth	50	LF		$	-
55	8" DI Pipe, CL 350 (Gravity Sewer) 16' - 18' Depth	50	LF		$	-
56	8" PVC Pipe, C-900 DR 18 (Gravity Sewer) 0' - 6' Depth	200	LF		$	-
57	8" PVC Pipe, C-900 DR 18 (Gravity Sewer) 6' - 8' Depth	400	LF		$	-
58	8" PVC Pipe, C-900 DR 18 (Gravity Sewer) 8' - 10' Depth	400	LF		$	-
59	8" PVC Pipe, C-900 DR 18 (Gravity Sewer) 10' - 12' Depth	400	LF		$	-
60	8" PVC Pipe, C-900 DR 18 (Gravity Sewer) 12' - 14' Depth	400	LF		$	-
61	8" PVC Pipe, C-900 DR 18 (Gravity Sewer) 14' - 16' Depth	200	LF		$	-

62	8" PVC Pipe, C-900 DR 18 (Gravity Sewer) 16' - 18' Depth	200	LF		$ -
63	10" DI Pipe, CL 350 (Gravity Sewer) 0' - 6' Depth	50	LF		$ -
64	10" DI Pipe, CL 350 (Gravity Sewer) 6' - 8' Depth	100	LF		$ -
65	10" DI Pipe, CL 350 (Gravity Sewer) 8' - 10' Depth	100	LF		$ -
66	10" DI Pipe, CL 350 (Gravity Sewer) 10' - 12' Depth	50	LF		$ -
67	10" DI Pipe, CL 350 (Gravity Sewer) 12' - 14' Depth	50	LF		$ -
68	10" DI Pipe, CL 350 (Gravity Sewer) 14' - 16' Depth	50	LF		$ -
69	10" DI Pipe, CL 350 (Gravity Sewer) 16' - 18' Depth	50	LF		$ -
70	10" PVC Pipe, C-900 DR 18 (Gravity Sewer) 0' -6' Depth	100	LF		$ -
71	10" PVC Pipe, C-900 DR 18 (Gravity Sewer) 6' - 8' Depth	400	LF		$ -
72	10" PVC Pipe, C-900 DR 18 (Gravity Sewer) 8' - 10' Depth	400	LF		$ -
73	10" PVC Pipe, C-900 DR 18 (Gravity Sewer) 10' - 12' Depth	400	LF		$ -
74	10" PVC Pipe, C-900 DR 18 (Gravity Sewer) 12' - 14' Depth	400	LF		$ -
75	10" PVC Pipe, C-900 DR 18 (Gravity Sewer) 14' - 16' Depth	200	LF		$ -
76	10" PVC Pipe, C-900 DR 18 (Gravity Sewer) 16' - 18' Depth	200	LF		$ -
77	12" DI Pipe, CL 350 (Gravity Sewer) 0' - 6' Depth	50	LF		$ -
78	12" DI Pipe, CL 350 (Gravity Sewer) 6' - 8' Depth	100	LF		$ -
79	12" DI Pipe, CL 350 (Gravity Sewer) 8' - 10' Depth	100	LF		$ -
80	12" DI Pipe, CL 350 (Gravity Sewer) 10' - 12' Depth	100	LF		$ -
81	12" DI Pipe, CL 350 (Gravity Sewer) 12' - 14' Depth	100	LF		$ -
82	12" DI Pipe, CL 350 (Gravity Sewer) 14' - 16' Depth	50	LF		$ -
83	12" DI Pipe, CL 350 (Gravity Sewer) 16' - 18' Depth	50	LF		$ -
84	12" PVC Pipe, C-900 DR 18 (Gravity Sewer) 0' ' 6' Depth	100	LF		$ -
85	12" PVC Pipe, C-900 DR 18 (Gravity Sewer) 6' - 8' Depth	200	LF		$ -
86	12" PVC Pipe, C-900 DR 18 (Gravity Sewer) 8' - 10' Depth	200	LF		$ -
87	12" PVC Pipe, C-900 DR 18 (Gravity Sewer) 10' - 12' Depth	100	LF		$ -
88	12" PVC Pipe, C-900 DR 18 (Gravity Sewer) 12' - 14' Depth	100	LF		$ -
89	12" PVC Pipe, C-900 DR 18 (Gravity Sewer) 14' - 16' Depth	50	LF		$ -
90	12" PVC Pipe, C-900 DR 18 (Gravity Sewer) 16' - 18' Depth	50	LF		$ -
91	16" DI Pipe, CL 350 (Gravity Sewer) 0' - 6' Depth	200	LF		$ -
92	16" DI Pipe, CL 350 (Gravity Sewer) 6' - 8' Depth	400	LF		$ -
93	16" DI Pipe, CL 350 (Gravity Sewer) 8' - 10' Depth	400	LF		$ -
94	16" DI Pipe, CL 350 (Gravity Sewer) 10' - 12' Depth	200	LF		$ -
95	16" DI Pipe, CL 350 (Gravity Sewer) 12' - 14' Depth	200	LF		$ -
96	16" DI Pipe, CL 350 (Gravity Sewer) 14' - 16' Depth	100	LF		$ -
97	16" DI Pipe, CL 350 (Gravity Sewer) 16' - 18' Depth	100	LF		$ -
98	16" PVC Pipe, C-905 DR 18 (Gravity Sewer) 0' - 6' Depth	100	LF		$ -
99	16" PVC Pipe, C-905 DR 18 (Gravity Sewer) 6' - 8' Depth	200	LF		$ -
100	16" PVC Pipe, C-905 DR 18 (Gravity Sewer) 8' - 10' Depth	200	LF		$ -
101	16" PVC Pipe, C-905 DR 18 (Gravity Sewer) 10' - 12' Depth	100	LF		$ -
102	16" PVC Pipe, C-905 DR 18 (Gravity Sewer) 12' - 14' Depth	100	LF		$ -
103	16" PVC Pipe, C-905 DR 18 (Gravity Sewer) 14' - 16' Depth	50	LF		$ -
104	16" PVC Pipe, C-905 DR 18 (Gravity Sewer) 16' - 18' Depth	50	LF		$ -
105	18" DI Pipe, CL 350 (Gravity Sewer) 0' - 6' Depth	200	LF		$ -
106	18" DI Pipe, CL 350 (Gravity Sewer) 6' - 8' Depth	400	LF		$ -
107	18" DI Pipe, CL 350 (Gravity Sewer) 8' - 10' Depth	400	LF		$ -
108	18" DI Pipe, CL 350 (Gravity Sewer) 10' - 12' Depth	200	LF		$ -
109	18" DI Pipe, CL 350 (Gravity Sewer) 12' - 14' Depth	200	LF		$ -
110	18" DI Pipe, CL 350 (Gravity Sewer) 14' - 16' Depth	100	LF		$ -
111	18" DI Pipe, CL 350 (Gravity Sewer) 16' - 18' Depth	100	LF		$ -
112	18" PVC Pipe, C-905 DR 21 (Gravity Sewer) 0' - 6' Depth	100	LF		$ -
113	18" PVC Pipe, C-905 DR 21 (Gravity Sewer) 6' - 8' Depth	200	LF		$ -
114	18" PVC Pipe, C-905 DR 21 (Gravity Sewer) 8' - 10' Depth	200	LF		$ -
115	18" PVC Pipe, C-905 DR 21 (Gravity Sewer) 10' - 12' Depth	100	LF		$ -
116	18 PVC Pipe, C-905 DR 21 (Gravity Sewer) 12' - 14' Depth	100	LF		$ -
117	18" PVC Pipe, C-905 DR 21 (Gravity Sewer) 14' - 16' Depth	50	LF		$ -
118	18" PVC Pipe, C-905 DR 21 (Gravity Sewer) 16' - 18' Depth	50	LF		$ -
119	21" DI Pipe, CL 350 (Gravity Sewer) 0' - 6' Depth	200	LF		$ -
120	21" DI Pipe, CL 350 (Gravity Sewer) 6' - 8' Depth	400	LF		$ -

121	21" DI Pipe, CL 350 (Gravity Sewer) 8' - 10' Depth	400	LF		$	-
122	21" DI Pipe, CL 350 (Gravity Sewer) 10' - 12' Depth	200	LF		$	-
123	21" DI Pipe, CL 350 (Gravity Sewer) 12' - 14' Depth	200	LF		$	-
124	21" DI Pipe, CL 350 (Gravity Sewer) 14' - 16' Depth	100	LF		$	-
125	21" DI Pipe, CL 350 (Gravity Sewer) 16' - 18' Depth	100	LF		$	-
126	21" PVC Pipe, C-905 DR 21 (Gravity Sewer) 0' - 6' Depth	100	LF		$	-
127	21" PVC Pipe, C-905 DR 21 (Gravity Sewer) 6' - 8' Depth	200	LF		$	-
128	21" PVC Pipe, C-905 DR 21 (Gravity Sewer) 8' - 10' Depth	200	LF		$	-
129	21" PVC Pipe, C-905 DR 21 (Gravity Sewer) 10' - 12' Depth	100	LF		$	-
130	21" PVC Pipe, C-905 DR 21 (Gravity Sewer) 12' - 14' Depth	100	LF		$	-
131	21" PVC Pipe, C-905 DR 21 (Gravity Sewer) 14' - 16' Depth	50	LF		$	-
132	21" PVC Pipe, C-905 DR 21 (Gravity Sewer) 16' - 18' Depth	50	LF		$	-
133	24" DI Pipe, CL 350 (Gravity Sewer) 0' - 6' Depth	200	LF		$	-
134	24" DI Pipe, CL 350 (Gravity Sewer) 6' - 8' Depth	400	LF		$	-
135	24" DI Pipe, CL 350 (Gravity Sewer) 8' - 10' Depth	400	LF		$	-
136	24" DI Pipe, CL 350 (Gravity Sewer) 10' - 12' Depth	200	LF		$	-
137	24" DI Pipe, CL 350 (Gravity Sewer) 12' - 14' Depth	200	LF		$	-
138	24" DI Pipe, CL 350 (Gravity Sewer) 14' - 16' Depth	100	LF		$	-
139	24" DI Pipe, CL 350 (Gravity Sewer) 16' - 18' Depth	100	LF		$	-
140	24" PVC Pipe, C-905 DR 21 (Gravity Sewer) 0' - 6' Depth	100	LF		$	-
141	24" PVC Pipe, C-905 DR 21 (Gravity Sewer) 6' - 8' Depth	200	LF		$	-
142	24" PVC Pipe, C-905 DR 21 (Gravity Sewer) 8' - 10' Depth	200	LF		$	-
143	24" PVC Pipe, C-905 DR 21 (Gravity Sewer) 10' - 12' Depth	100	LF		$	-
144	24" PVC Pipe, C-905 DR 21 (Gravity Sewer) 12' - 14' Depth	100	LF		$	-
145	24" PVC Pipe, C-905 DR 21 (Gravity Sewer) 14' - 16' Depth	50	LF		$	-
146	24" PVC Pipe, C-905 DR 21 (Gravity Sewer) 16' - 18' Depth	50	LF		$	-
147	Install PVC Cleanout	10	EA		$	-
148	Replace PVC Cleanout with Manhole Structure	10	EA		$	-
149	Remove Pipe 2" or 4" (Gravity Sewer)	200	LF		$	-
150	Remove Pipe 6" or 8" (Gravity Sewer)	400	LF		$	-
151	Remove Pipe 10" or 12" (Gravity Sewer)	400	LF		$	-
152	Remove Pipe 15", 16" or 18" (Gravity Sewer)	200	LF		$	-
153	Remove Pipe 21" or 24" (Gravity Sewer)	200	LF		$	-
154	4" Pipe - Install or Adjust Service Lateral 0'-6' Deep	3	EA		$	-
155	4" Pipe - Install or Adjust Service Lateral 6'-8' Deep	3	EA		$	-
156	4" Pipe - Install or Adjust Service Lateral 8'-10' Deep	3	EA		$	-
157	4" Pipe - Install or Adjust Service Lateral 10'-12'Deep	3	EA		$	-
158	4" Pipe - Install or Adjust Service Lateral 12'-14'Deep	2	EA		$	-
159	4" Pipe - Install or Adjust Service Lateral 14'-16'Deep	2	EA		$	-
160	4" Pipe - Install or Adjust Service Lateral 16'-18' Deep	2	EA		$	-
161	6" Pipe - Install or Adjust Service Lateral 0'-6' Deep	3	EA		$	-
162	6" Pipe - Install or Adjust Service Lateral 6'-8' Deep	3	EA		$	-
163	6" Pipe - Install or Adjust Service Lateral 8'-10' Deep	3	EA		$	-
164	6" Pipe - Install or Adjust Service Lateral 10'-12' Deep	3	EA		$	-
165	6" Pipe - Install or Adjust Service Lateral 12'-14' Deep	2	EA		$	-
166	6" Pipe - Install or Adjust Service Lateral 14'-16' Deep	2	EA		$	-
167	6" Pipe - Install or Adjust Service Lateral 16'-18' Deep	2	EA		$	-
168	2" Sewer Line Manhole Connection	3	EA		$	-
169	4" Sewer Line Manhole Connection	3	EA		$	-
170	6" Sewer Line Manhole Connection	5	EA		$	-
171	8" Sewer Line Manhole Connection	5	EA		$	-
172	10" Sewer Line Manhole Connection	3	EA		$	-
173	12" Sewer Line Manhole Connection	3	EA		$	-
174	16" Sewer Line Manhole Connection	3	EA		$	-
175	18" Sewer Line Manhole Connection	2	EA		$	-
176	21” Sewer Line Manhole Connection	2	EA		$	-
177	24” Sewer Line Manhole Connection	2	EA		$	-
178	2" Inside Drop Connection	3	EA		$	-
179	4" Inside Drop Connection	3	EA		$	-

180	6" Inside Drop Connection	3	EA		$ -
181	8" Inside Drop Connection	5	EA		$ -
182	10" Inside Drop Connection	3	EA		$ -
183	12" Inside Drop Connection	3	EA		$ -
184	15"/16" Inside Drop Connection	3	EA		$ -
185	18" Inside Drop Connection	2	EA		$ -
186	21" Inside Drop Connection	3	EA		$ -
187	24" Inside Drop Connection	2	EA		$ -
188	Grouting Out of Service Pipe (Force Main)	30	CY		$ -
189	Disconnect & Plug 2" or 4" Pipe	5	EA		$ -
190	Disconnect & Plug 6" or 8" Pipe	5	EA		$ -
191	Disconnect & Plug 10" or 12" Pipe	5	EA		$ -
192	2" PVC Restrained Joint Pipe & Fittings FM, SDR 21	200	LF		$ -
193	4" PVC Pipe, C-900 DR 18 (Force Main)	500	LF		$ -
194	4" PVC Restrained Joint Pipe & Fittings FM, C-900 DR 18	100	LF		$ -
195	6" PVC Pipe, C-900 DR 18 (Force Main)	500	LF		$ -
196	6" PVC Restrained Joint Pipe & Fittings FM, C-900 DR 18	100	LF		$ -
197	8" PVC Pipe, C-900 DR 18 (Force Main)	500	LF		$ -
198	8" PVC Restrained Joint Pipe & Fittings FM, C-900 DR 18	100	LF		$ -
199	10" PVC Pipe, C-900 DR 18 (Force Main)	500	LF		$ -
200	10" PVC Restrained Joint Pipe & Fittings FM, C-900 DR 18	100	LF		$ -
201	12" PVC Pipe, C-900 DR 18 (Force Main)	300	LF		$ -
202	12" PVC Restrained Joint Pipe & Fittings FM, C-900 DR 18	100	LF		$ -
203	2" Restrained Joints	20	EA		$ -
204	4" Restrained Joints	20	EA		$ -
205	6" Restrained Joints	20	EA		$ -
206	8" Restrained Joints	20	EA		$ -
207	10" Restrained Joints	20	EA		$ -
208	12" Restrained Joints	20	EA		$ -
209	2"-4" Forcemain Pipe and Appurtenances - Over Depth Excavation	400	LF		$ -
210	6"-8" Forcemain Pipe and Appurtenances - Over Depth Excavation	500	LF		$ -
211	10"-12" Forcemain Pipe and Appurtenances - Over Depth Excavation	200	LF		$ -
212	Remove Out of Service Pipe 2" or 4" (Force Main)	500	LF		$ -
213	Remove Out of Service Pipe 6" or 8" (Force Main)	1000	LF		$ -
214	Remove Out of Service Pipe 10" or 12" (Force Main)	500	LF		$ -
215	2" Sleeved Connection	6	EA		$ -
216	4" Sleeved Connection	6	EA		$ -
217	6" Sleeved Connection	10	EA		$ -
218	8" Sleeved Connection	10	EA		$ -
219	10" Sleeved Connection	4	EA		$ -
220	12" Sleeved Connection	4	EA		$ -
221	Reverse Deadman for 2" or 4" Pipe	3	EA		$ -
222	Reverse Deadman for 6" or 8" Pipe	5	EA		$ -
223	Reverse Deadman for 10" or 12" Pipe	3	EA		$ -
224	DI Fittings FM C 153 (Compact Body)	2	TN		$ -
225	2" Air Release Assembly (In-line)	2	EA		$ -
226	2" Air Release Assembly (Offset)	2	EA		$ -
227	2" RWGV (Resilient Wedge Gate Valve) & Box	4	EA		$ -
228	4" RWGV & Box C 515	4	EA		$ -
229	6" RWGV & Box C 515	10	EA		$ -
230	8" RWGV & Box C 515	5	EA		$ -
231	10" RWGV & Box C 515	2	EA		$ -
232	12" RWGV & Box C 515	2	EA		$ -
233	Adjust Valve Box to Finished Grade (In Pavement)	5	EA		$ -
234	Adjust Valve Box to Finished Grade (Outside of Pavement)	5	EA		$ -
235	4" Line Stop	1	EA		$ -
236	6" Line Stop	1	EA		$ -
237	8" Line Stop	1	EA		$ -
238	10" Line Stop	1	EA		$ -

239	12" Line Stop	1	EA		$	-
240	4" x 2" Tapping Saddle Valve & Box	2	EA		$	-
241	4" x 4" Tapping Sleeve Valve & Box	2	EA		$	-
242	6" x 2" Tapping Saddle Valve & Box	2	EA		$	-
243	6" x 4" Tapping Sleeve Valve & Box	2	EA		$	-
244	6" x 6" Tapping Sleeve Valve & Box	2	EA		$	-
245	8" x 2" Tapping Saddle Valve & Box	2	EA		$	-
246	8" x 4" Tapping Sleeve Valve & Box	2	EA		$	-
247	8" x 6" Tapping Sleeve Valve & Box	2	EA		$	-
248	8" x 8" Tapping Sleeve Valve & Box	2	EA		$	-
249	10" x 2" Tapping Saddle Valve & Box	2	EA		$	-
250	10" x 4" Tapping Sleeve Valve & Box	2	EA		$	-
251	10" x 6" Tapping Sleeve Valve & Box	2	EA		$	-
252	10" x 8" Tapping Sleeve Valve & Box	2	EA		$	-
253	10" x 10" Tapping Sleeve Valve & Box	2	EA		$	-
254	12" x 2" Tapping Saddle Valve & Box	2	EA		$	-
255	12" x 4" Tapping Sleeve Valve & Box	2	EA		$	-
256	12" x 6" Tapping Sleeve Valve & Box	2	EA		$	-
257	12" x 8" Tapping Sleeve Valve & Box	2	EA		$	-
258	12" x 10" Tapping Sleeve Valve & Box	2	EA		$	-
259	12" x 12" Tapping Sleeve Valve & Box	2	EA		$	-
260	4' Dia. - Precast Manhole Standard	30	VF		$	-
261	4' Dia. - Precast Manhole Inside Drop	10	VF		$	-
262	4' Dia. - Precast Manhole Outside Drop	10	VF		$	-
263	5' Dia. - Precast Manhole Standard	30	VF		$	-
264	5' Dia. - Precast Manhole Inside Drop	10	VF		$	-
265	5' Dia. - Precast Manhole Outside Drop	10	VF		$	-
266	5' Dia. - Precast Air Release Manhole	10	VF		$	-
267	6' Dia. - Precast Manhole Standard	30	VF		$	-
268	6' Dia. - Precast Manhole Inside Drop	10	VF		$	-
269	6' Dia. - Precast Manhole Outside Drop	10	VF		$	-
270	Removal of Existing Manhole	3	EA		$	-
271	Remove Existing Manhole Additional	30	VF		$	-
272	Initial Excavation - 0'-6' Deep	5	EA		$	-
273	Initial Excavation - 6'-8' Deep	6	EA		$	-
274	Initial Excavation - 8'-10' Deep	6	EA		$	-
275	Initial Excavation - 10'-12' Deep	6	EA		$	-
276	Initial Excavation - 12'-14' Deep	3	EA		$	-
277	Initial Excavation - 14'-16' Deep	3	EA		$	-
278	Initial Excavation - 16'-18' Deep	2	EA		$	-
279	Initial Excavation - 18'-20' Deep	2	EA		$	-
280	Additional Excavation - 0'-6' Deep	100	LF		$	-
281	Additional Excavation - 6'-8' Deep	100	LF		$	-
282	Additional Excavation - 8'-10' Deep	100	LF		$	-
283	Additional Excavation - 10'-12' Deep	100	LF		$	-
284	Additional Excavation - 12'-14' Deep	100	LF		$	-
285	Additional Excavation - 14'-16' Deep	100	LF		$	-
286	Additional Excavation - 16'-18' Deep	50	LF		$	-
287	Additional Excavation - 18'-20' Deep	50	LF		$	-
288	Wastewater Bypass Pumping, Set up, 6" - 10" diameter	5	EA		$	-
289	Wastewater Bypass Pumping, Set up, 12" - 14" diameter	2	EA		$	-
290	Wastewater Bypass Pumping, Set up, 15" - 21" diameter	2	EA		$	-
291	Wastewater Bypass Pumping, Set up, 24" diameter	2	EA		$	-
292	Wastewater Bypass Pumping, Operation, 6" - 10" diameter	10	DAY		$	-
293	Wastewater Bypass Pumping, Operation, 12" - 14" diameter	5	DAY		$	-
294	Wastewater Bypass Pumping, Operation, 15" - 21" diameter	5	DAY		$	-
295	Wastewater Bypass Pumping, Operation, 24" diameter	2	DAY		$	-
296	6" Dia. Pipe Gravity Sewer Point Repair (DI Replacement Pipe)	2	EA		$	-
297	6" Dia. Pipe Gravity Sewer Point Repair (PVC Replacement Pipe)	5	EA		$	-

298	8" Dia. Pipe Gravity Sewer Point Repair (DI Replacement Pipe)	2	EA		$ -
299	8" Dia. Pipe Gravity Sewer Point Repair (PVC Replacement Pipe)	5	EA		$ -
300	10" Dia. Pipe Gravity Sewer Point Repair (DI Replacement Pipe)	2	EA		$ -
301	10" Dia. Pipe Gravity Sewer Point Repair (PVC Replacement Pipe)	5	EA		$ -
302	12" Dia. Pipe Gravity Sewer Point Repair (DI Replacement Pipe)	2	EA		$ -
303	12" Dia. Pipe Gravity Sewer Point Repair (PVC Replacement Pipe)	5	EA		$ -
304	15"/16" Dia. Pipe Gravity Sewer Point Repair (DI Replacement Pipe)	2	EA		$ -
305	15"/16" Dia. Pipe Gravity Sewer Point Repair (PVC Rplacement Pipe)	2	EA		$ -
306	18" Dia. Pipe Gravity Sewer Point Repair (DI Replacement Pipe)	2	EA		$ -
307	18" Dia. Pipe Gravity Sewer Point Repair (PVC Replacement Pipe)	2	EA		$ -
308	21" Dia. Pipe Gravity Sewer Point Repair (DI Replacement Pipe)	2	EA		$ -
309	21" Dia. Pipe Gravity Sewer Point Repair(PVC Replacement Pipe)	2	EA		$ -
310	24" Dia. Pipe Gravity Sewer Point Repair (DI Replacement Pipe)	2	EA		$ -
311	24" Dia. Pipe Gravity Sewer Point Repair (PVC Replacement Pipe)	2	EA		$ -
312	6" Dia. Pipe Gravity Sewer Point Repair - Additional Length (DI Replacement Pipe)	20	LF		$ -
313	6" Dia. Pipe Gravity Sewer Point Repair - Additional Length (PVC Replacement Pipe)	50	LF		$ -
314	8" Dia. Pipe Gravity Sewer Point Repair - Additional Length (DI Replacement Pipe)	20	LF		$ -
315	8" Dia. Pipe Gravity Sewer Point Repair - Additional Length (PVC Replacement Pipe)	100	LF		$ -
316	10" Dia. Pipe Gravity Sewer Point Repair - Additional Length (DI Replacement Pipe)	20	LF		$ -
317	10" Dia. Pipe Gravity Sewer Point Repair - Additional Length (PVC Replacement Pipe)	100	LF		$ -
318	12" Dia. Pipe Gravity Sewer Point Repair Additional Length (DI Replacement Pipe)	50	LF		$ -
319	12" Dia. Pipe Gravity Sewer Point Repair - Additional Length (PVC Replacement Pipe)	20	LF		$ -
320	15"/16" Dia. Pipe Gravity Sewer Point Repair - Additional Length (DI Replacement Pipe)	20	LF		$ -
321	15"/16" Dia. Pipe Gravity Sewer Point Repair - Additional Length (PVC Replacement Pipe)	50	LF		$ -
322	18" Dia. Pipe Gravity Sewer Point Repair - Additional Length (DI Replacement Pipe)	20	LF		$ -
323	18" Dia. Pipe Gravity Sewer Point Repair - Additional Length (PVC Replacement Pipe)	50	LF		$ -
324	21" Dia. Pipe Gravity Sewer Point Repair - Additional Length (DI Replacement Pipe)	20	LF		$ -
325	21" Dia. Pipe Gravity Sewer Point Repair - Additional Length (PVC Replacement Pipe)	50	LF		$ -
326	24" Dia. Pipe Gravity Sewer Point Repair - Additional Length (DI Replacement Pipe)	20	LF		$ -
327	24" Dia. Pipe Gravity Sewer Point Repair - Additional Length (PVC Replacement Pipe)	50	LF		$ -
328	2" Dia. Pipe Forcemain Point Repair	3	EA		$ -
329	4" Dia. Pipe Forcemain Point Repair	3	EA		$ -
330	6" Dia. Pipe Forcemain Point Repair	3	EA		$ -
331	8" Dia. Pipe Forcemain Point Repair	3	EA		$ -
332	10" Dia. Pipe Forcemain Point Repair	2	EA		$ -
333	12" Dia. Pipe Forcemain Point Repair	2	EA		$ -
334	Replace Manhole Ring & Cover (Asphalt Pavement)	5	EA		$ -
335	Replace Manhole Ring & Cover (Unpaved)	5	EA		$ -
336	Manhole Bench Replacement, 4' Diameter	2	EA		$ -
337	Manhole Bench Replacement, 5' Diameter	2	EA		$ -
338	Manhole Bench Replacement, 6' Diameter	2	EA		$ -
339	Adjust Manhole Ring & Cover to Finished Grade (In Pavement)	5	EA		$ -
340	Adjust Manhole Ring & Cover to Finished Grade (Outside of Pavement)	5	EA		$ -
341	Flowable Concrete Fill	100	CY		$ -
342	Roadway Base, Lime Rock, Primed, Min. LBR 100, Variable Thickness	120	CY		$ -
343	Roadway Base, Crushed Concrete/Graded Aggregate, Min. LBR 100, Variable Thickness	120	CY		$ -
344	Superpave Asphalt Base, Type B 12.5, Variable Thickness	50	TN		$ -
345	Superpave Asphalt Concrete, Type SP 9.5, Fine, Traffic Level C, Variable Thickness	100	TN		$ -
346	Superpave Asphalt Concrete, Type SP 12.5, Fine, Traffic Level C, Variable Thickness	100	TN		$ -
347	Pavement, Cement Concrete, 6" Min Thickness (Driveways)	100	SY		$ -
348	Pavement, Cement Concrete, 8" Thick	100	SY		$ -
349	Driveway Restoration, In Kind, Decorative Block	50	SY		$ -
350	Milling Existing Asphalt Pavement, 1/2" Average Depth	150	SY		$ -
351	Milling Existing Asphalt Pavement, 3/4" Average Depth	150	SY		$ -
352	Milling Existing Asphalt Pavement, 1" Average Depth	150	SY		$ -
353	Curb & Gutter, Concrete, FDOT Type D	100	LF		$ -
354	Curb & Gutter Concrete, FDOT Type F	100	LF		$ -
355	Curb & Gutter, Concrete, Miami Curb	300	LF		$ -
356	Valley Gutter, Concrete, PCED Index 1315	100	LF		$ -

357	Sidewalk, Concrete, 4" Min. Thickness, Remove and Replace	500	SF		$	-
358	Sidewalk, Concrete, 6" Min. Thickness, Remove and Replace	500	SF		$	-
359	Sodding	4500	SF		$	-
360	Sectional Liner, 6" - 24" Pipe	50	EA		$	-
				SUBTOTAL - POINT REPAIRS	$	-
				GRAND TOTAL	$	5,493,574.15

Bid quantities are for comparison purposes only.
This contract consists of various projects which are not yet defined and no quantities are guaranteed.

Thank you for providing Flotech the opportunity to present our qualifications and experience to clean, inspect, make condition assessment and repair and rehabilitate the sanitary sewer system in the City of St. Pete Beach.

Founded in 2012, Flotech Environmental, LLC is an SBA, DBE, South Florida based company dedicated to cleaning, inspection, repair and rehabilitation of wastewater conveyance systems. Flotech has cleaned and inspected over 5 million feet of Sanitary Sewer systems in South Florida, making Flotech the premier company in this sector. In addition, Flotech provides related emergency flood mitigation, sewage spillage clean-up, dewatering, bypass pumping, wastewater hauling, soil stabilization and soft dig services. Our team of more than 65 qualified and dedicated professionals deliver an array of trenchless rehabilitation services.

Flotech's investment in high-performance equipment and fleet management program ensures reliable and dependable service. Our 8 Combination Jet-Vac Trucks and 4 CCTV Trucks are recognized to be the best-in-class fleet. This combination of equipment is best suited to efficiently tackle the most demanding blockages and frequent sewage spills. Our vacuum trucks also provide a fast and safe way to remove material, without requiring a backhoe or other traditional digging equipment. This is ideal in emergency situations where time is of the essence.

Flotech offers inspection and assessment expertise in video analog technology, high-definition digital technology, laser profiling, smoke testing, flow monitoring, pressure testing and pipe deflection testing to identify and document deficiencies. All of our operators are NASSCO certified and produce accurate assessment of pipeline condition that help prevent faulty installations, predict potential failure points, identify deficiencies in need of repair and offer preventative maintenance for drainage and sanitary sewer systems.

Flotech performs an array of trenchless repair and rehabilitation services. We are certified applicators for the major coating manufacturers. Flotech is also certified installer for the leading chemical grout, Internal Joint Seals, Check Valves and Cured-In-Place Pipe (CIPP) manufacturers.

Our team of qualified and dedicated professionals have worked together for over 20 years and provide a standard of excellence to agencies, municipalities, contractors, property management companies and consulting engineers. With an expensive list of successful past projects throughout Florida, we hold an expert level of understanding in our industry and are committed to providing services of top professional quality.

We would be greatly interested to service the City of St. Pete Beach in this contract, and in the future. We thank you for review and consideration of our company.

Sincerely,
Jose Ferre



General Information

Company Name: Flotech Environmental, LLC
Mailing Address: 657 South Drive, Suite 401, Miami, FL 33166
Project Contacts:

Roberto Luna, VP of Operations
Email: roberto.luna@flotechllc.com
Tel: (786) 970-0010

Geimar Pino, Project Manager
Email: geimar.pino@flotechllc.com
Tel: (862) 276-0384

Rafael Naveiras, Director of Operations
Email: rafael.naveiras@flotechllc.com
Tel: (305) 924-5873

Yinet Quintana, Executive Director,
Finance & Business Management
Email: yinet.quintana@flotecllc.com
Tel: (305) 505-5565

Business Hours:

Office: 8:30 am to 5:00 pm
Field: 6:30 am / On call for emergency

Legal Status: LLC
State Incorporated: Florida
Date of Incorporation: 01/10/2012
Location of Office servicing project: Flotech South; 657 South Drive, Suite 401, Miami, FL 33166
Number of Professional Staff servicing project:

Flotech South Field Crew: 30
Flotech South Administrative Offices: 10

Business Parent or Subsidiary: N/A
State of Business License: Florida, CGC061052

1. Approach to Scope of Services

Flotech Environmental, LLC is committed to delivering high-quality, minimally invasive infrastructure rehabilitation services that align precisely with the City of St. Pete Beach's scope of work. Founded in 2012, our firm has successfully cleaned, inspected, and rehabilitated over 6 million feet of sanitary sewer and stormwater conveyance systems throughout Florida. Our approach is rooted in safety, sustainability, and regulatory compliance, with a proven track record of working seamlessly with municipalities, contractors, and engineering firms.

For lining and rehabilitation projects, our standard operating procedure (SOP) includes:

- Initial Assessment & CCTV Inspection: We begin with a thorough video inspection to evaluate pipe conditions and identify structural deficiencies.
- Cleaning & Preparation: High-pressure jetting and vacuum extraction ensure optimal surface preparation for lining.
- Trenchless Rehabilitation: We deploy cured-in-place pipe (CIPP) lining or other trenchless technologies based on site-specific needs, minimizing surface disruption and maximizing system longevity.
- Post-Installation Verification: Final CCTV inspection and flow testing confirm installation integrity and compliance with municipal standards.

Our implementation strategy emphasizes proactive communication, detailed scheduling, and adaptive field coordination to ensure every phase of the project meets or exceeds expectations.

2. Staffing Balance and Resource Allocation

Flotech maintains a flexible, cross-trained workforce capable of scaling to meet project demands without compromising quality or safety. For this contract, we will assign a dedicated project manager to serve as the primary liaison with City personnel, supported by:

- Field supervisors with trenchless rehabilitation expertise
- Certified technicians trained in confined space entry and NASSCO standards
- Administrative staff for documentation, reporting, and compliance tracking

Our internal resource planning system allows us to dynamically allocate crews based on project milestones, weather conditions, and unforeseen site variables. This ensures consistent coverage and responsiveness throughout the contract term.

3. Timely Completion Strategy

Timeliness is a cornerstone of our operational philosophy. To facilitate on-schedule delivery, Flotech employs:

- Pre-project planning with contingency buffers built into the timeline
- Real-time progress tracking using digital field reporting tools
- Rapid mobilization protocols for emergencies or accelerated tasks
- Daily coordination meetings to review progress and adjust logistics

Our team's familiarity with Florida's permitting processes and municipal coordination enables us to anticipate and resolve potential delays before they impact on the schedule.

4. Unique Abilities, Innovations, and Special Considerations

Flotech brings several distinctive strengths to this engagement:

- Trenchless Expertise: Our use of non-invasive technologies like CIPP and vacuum excavation reduces environmental impact and public disruption.
- Emergency Response Capability: We are equipped to respond 24/7 to flooding, sinkholes, and infrastructure failures, ensuring continuity of service.
- Client-Centered Communication: Our culture prioritizes transparency, responsiveness, and respect for community stakeholders, qualities consistently praised by project managers and municipal clients.
- Regulatory Fluency: Our work is guided by deep familiarity with NAASCO standards, municipal ordinances, and procurement codes, ensuring full compliance and audit readiness.

We view each project not just as a technical task, but as an opportunity to build trust, deliver value, and contribute to the long-term resilience of the City's infrastructure.

Scope of Services

Vacuum Truck Cleaning Services

- **Storm & Sanitary Sewers**
- **French Drain**
- **Deep Well**
- **Box Culvert**
- **Outfall/Barnacle Removal**
- **Environmental Clean-up**
- **Mechanical Cleaning (Root, Tuberculation, Grease, Mineral)**

Inspection Services

- **Certified Sanitary Sewer Evaluation Studies**
- **Leak Detection (Air, Dye & Smoke Testing)**
- **Flow Monitoring**
- **NASSCO Certified PACP, MACP, LACP CCTV Inspections**
- **GIS Data Collection**
- **Laser Profile**

Repair & Installation Services

- **Pipeline Rehabilitation by CIPP & SIPP**
- **Internal Joint Seals**
- **Chemical Grouting of Lateral Services & Pipe Joints**
- **Manhole Rehabilitation**
- **Injection Grouting**
- **Outfall Check-Valve & Flapgate Installation**
- **Soil Stabilization**

Hydro-Excavation Services

Support Services

- **Plug Installation**
- **Bypass & Dewatering**
- **Commercial Dive Services**
- **Maintenance of Traffic**
- **Hauling & Disposal**

Emergency Services

- **Flood Response**
- **Disaster Relief**
- **Environmental Clean-up**

Combination Jet-Vac Services





Flotech's investment in high-performance equipment and fleet management program ensures reliable and dependable service. Flotech's 20 Combination Jet-Vac Trucks are recognized to be the best in class fleet, with 2,500 psi/100,000 GPM high pressure Jet Rodder pumps and powerful Positive Displacement blower producing 5000 CFM; capable of pulling material long distances into 15 CY (3,000 Gal) debris tanks. This combination of equipment is best suited to efficiently tackle the most demanding blockages and frequent sewage spills. Our vacuum trucks also provide a fast and safe way to remove material, without requiring a backhoe or other traditional digging equipment to excavate a site with utility locations for water, gas, electric, telephone and fiber optic lines. This is ideal in emergency situations where time is of the essence, such as fixing water main breaks.

- Sanitary Sewer Cleaning
- Storm Drainage Desilting
- Storm Drainage Well Desilting
- Canal and Drainage Ditch Clean-up
- Mechanical Cleaning (Root, Tuberculation, Grease, Mineral and Barnacle Removal)
- Hydro-Excavation and Soft Dig for Utility Locates





Inspection & Assessment Services

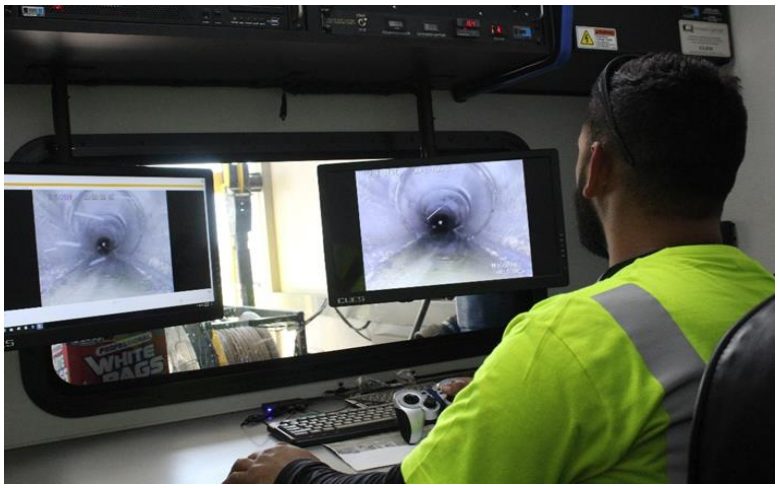

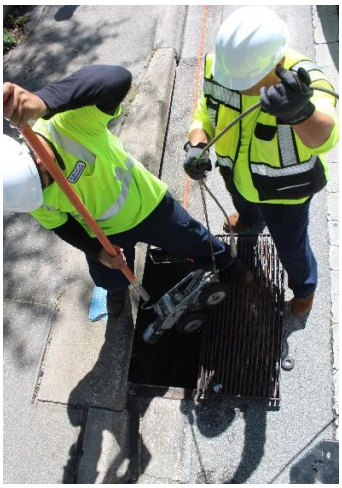

Flotech offers inspection and assessment expertise in video analog technology, high definition digital technology, laser profiling, smoke testing, flow monitoring, pressure testing and pipe deflection testing to identify and document deficiencies such as dips, offset joints, cracks, roots, blockages, infiltration, and more. All of our operators are NASSCO certified and produce accurate assessment of pipeline condition that help prevent faulty installations, predict potential failure points, identify deficiencies in need of repair and offer preventative maintenance for drainage and sanitary sewer systems.

- CCTV & High-Resolution Digital Side Scanning Pipeline Inspections (PACP Certified)
- Manhole, Wet Wells, Drainage Structure Inspections (MACP Certified)
- Sanitary Sewer Lateral Inspections (LACP Certified)
- Laser Profiling
- Deflection Testing
- Certified Sanitary Sewer Evaluation Studies (SSES)
- Leak Detection (Air, Dye & Smoke Testing)
- Flow Monitoring Data Collection
- GIS Data Collection



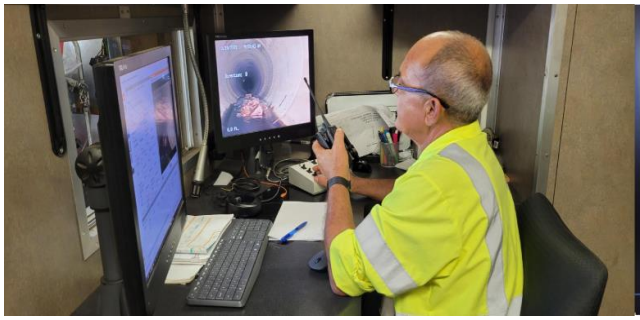



Repair & Rehabilitation Services


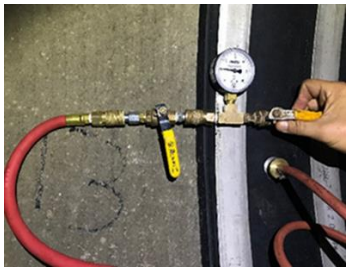


Flotech performs an array of trenchless repair and rehabilitation services. We are certified applicators for the major coating manufacturers of calcium aluminate, cementitious and epoxy type coatings for structures. Flotech is also certified installer for the leading chemical grout, Internal Joint Seals, Check Valves and Cured-In-Place Pipe (CIPP) manufacturers.

- Cured-In-Place Pipe (CIPP) Pipeline Rehabilitation (MH to MH)
- Short Cured-In-Place Pipe (SCIPP) Spot Repair
- Internal Joint Seal of Pipeline
- Chemical Grout Sealing of Structures, Mainline Joints and Service Laterals
- Manhole Repair & Rehabilitation
- Storm Drain Outfall Check-Valve & Flap Gate Installation & Maintenance
- Sinkhole/Soil Stabilization- Cementitious and Chemical Grout





Emergency Preparedness

Being a disaster relief service, it is Flotech's motto to "hope for the best and prepare for the worst". Preparation is key to ensuring successful service and safety during an emergency situation. Our company attentively monitors all possibilities of natural disasters, year-round throughout Florida. In the event of a possible storm or flood, our team is organized to plan for all risks and likelihoods.

Emergency Response

Flotech's experienced management team knows what to expect and how to respond to large-scale natural disasters. Each work site is assessed for best course of action. Progress photos are cataloged, and production is recorded daily; noting location, quantity of debris removed and corresponding disposal service facility location and disposal quantity. Disposal tickets are also recorded per work site.

This level of management proficiency dates to Flotech's assignment as First Responders for Hurricane Katrina in New Orleans, Louisiana in 2005, which consisted of unblocking hundreds of thousands of linear feet of storm water drains to alleviate flooding. Because of the scale and resources of our fleet, we are able to meet rigorous demand response times performing all operations necessary to completely remove any type of blockage and restore flow to wastewater conveyance systems.

Flotech's investment in high-performance equipment and fleet management program ensures reliable and dependable service. Flotech's 20+ Combination Jet-Vac Trucks are recognized to be the best-inclass fleet, with 2,500 psi/100,000 GPM high pressure Jet Rodder pumps and powerful Positive Displacement blower producing 5000 CFM; capable of pulling material long distances into 15 CY (3,000 Gal) debris tanks. This combination of equipment is best suited to efficiently tackle the most demanding blockages and frequent sewage spills. Our vacuum trucks also provide a fast and safe way to remove material, without requiring a backhoe or other traditional digging equipment to excavate a site with utility locations for water, gas, electric, telephone and fiber optic lines. This is ideal in emergency situations where time is of the essence, such as hurricane disaster relief or fixing water main breaks.

Although our company was founded in South Florida, Flotech now has active operating offices in Orlando, Tampa and West Palm Beach. Our fleet of over 20 Vactor trucks and 50+ seasoned operators are on-call for emergency services all throughout the State. In the event of a natural disaster or emergency, Flotech management is prepared to quickly assess, plan and re-allocate resources using effective communication and advanced technology. Emergency calls can be responded to within 1-2 hour notice in most cases and maximum 3 hours should work site be located at an extended distance from any of our operations center.

Teamwork at Work:

During Flotech's impressive project history, we have encountered numerous on-site challenges, all of which we can proudly state have been resolved in a timely and effective manner. For instance, the resolution of schedule conflict in March 2020: Flotech's South, FL crews were assigned to multi night-work on a sectional installation project in Broward County, when we received City of Miami Beach emergency force main break call requiring 24-hour, full week Vactor services. Team communication, resource planning and GPS fleet tracking resulted in the speedy reallocation of resources from our Central, FL center to ensure both projects were serviced and all commitments were kept. Remaining in constant communication, Flotech is experienced in handling emergency calls and last-minute changes to project's schedule, due to weather, client needs or other unforeseen conditions.

Safety

Safety is paramount to our company. The safety of Flotech's team members, client inspectors and local citizens are our first consideration when planning and completing all operations. Flotech's dedicated Safety Director oversees the health and safety of our team holding daily toolbox meetings, weekly safety topics, and enforcing our Fleet, Operations and Hurricane Preparedness safety programs. Our crews are certified in OSHA 10-hour, Advanced MOT (Traffic) and Confined Space Entry, amongst other safety certifications.

Diversity

As a 100% Minority Owned Business, Flotech Environmental has pride in our diverse team! We are a certified Minority Business Enterprise (MBE) with FDOT and encourage diversity throughout our hiring practices. Current breakdown of our team's workforce and ownership is detailed below:

Hispanic: 68 %
White: 18 %
Black: 14%

Support Services





Progressive safety practices and damage prevention are essential to the key benefits of using a proven leader in Florida. Our safety procedures include operational risk management, employee training and education, employee hydration process, daily vehicle inspections and safety audits.
Our crews are certified to self-perform dewatering, by-pass pumping and temporary traffic control.

- Temporary Traffic Control
- Bypass & Dewatering
- Flood Response
- Disaster Relief
- Open Cut Point Repairs







Project Approach

Initially, Flotech's Operation Team, guided by Flotech's Director of Operations and certified NASSCO instructor, Rafael Naveiras, will survey all released wastewater conveyance systems to collect and analyze relative information and perform a due diligence to process silt levels, dewatering, environmental and safety considerations, and other work order logistics.

Our Project Management Team will then plan and schedule the execution of traffic control, dewatering, desilting and inspection of the storm drain collection system, and develop a debris disposal plan. This plan will be submitted the designated City coordinator for approval prior to work order commencement. Once approved, Flotech Project Manager will assign the appropriate Crew Leader, depending on the scope of work. If the work only consists of dewatering and cleaning, a Vactor Operator will be appointed as the designated Crew Leader. If work order requires inspection, the appropriate certified NASSCO CCTV Operator will act as Crew Leader. If the project scope presents more challenging conditions, Flotech will assign a Superintendent to provide crew with guidance and oversight, ensuring the safe and efficient execution of work.

Project Manager will review site maps with Crew Leaders prior to work order start. If any deviation is noticed from site map, City coordinator will be notified. If Flotech Operator discovers an unforeseen condition that can potentially result in a collapsed line or further deteriorated conditions, Project Manager will notify the appropriate City representative before taking further action. Once lines are dewatered, Crew Leader will document the level of desilting, as per RFP scope of service. CCTV Operator/Crew Leader will provide video inspection reports and ArcGIS mapping utilizing the Stormwater Inventory Collection Form.

Field work reports are completed by Crew Leaders and collected daily. Project Manager and Director of Operations will review field work reports to monitor the daily performance of each crew and progress of each project. Flotech Project Manager will be responsible for inspection video QA/QC and preparation of deliverables package to be submitted to the City in a timely manner and as per RFP specifications.

Successful projects require effective planning and scheduling.

From March 2020 to August 2020 Flotech was contracted to clean 90,000 LF of 54" Outfall Force Main for Georgia Pacific Foley Cellulose plant from Perry, FL to the Gulf of Mexico. The force main was being installed in 20' section and 50% of pipe collected silt, marl and rocks, often in wet, compacted conditions. Three highly regarded national pipe cleaning contractors had been hired by Reynolds Construction - one of the nation's leading water and wastewater contractors - to clean the pipe and were falling behind schedule. Flotech won this opportunity by simulating

the site conditions using CYCLONE - Method for Modeling; deploying 3 Guzzlers and two 2100 Vactors, with an easement machine in order to work the access points at 2,500 LF. The formula offered the most efficient production to 1) Dewater pipes that were mostly full with active leaks; 2) Reduce stand-by time with three trucks working in a cue positioned to jump on next available access point. The minimizing of stand-by time reduced fatigue on crews stationed in hot, wet, and dark confined space conditions during 12-hour workdays. Flotech increased the production x4 and was contracted to finish the job.

Applying the right plan and tools to get the job done right.

More recently Flotech initially lost project opportunity Miami Signature Bridge 395 Project – 13th Street Stormwater Outfall (E-18 To SX-19) 60" x 311 LF to a competitor due to higher cost per hour pricing (although proposal was presented in a Lump Sum price). Two weeks later, Flotech was called by client to take over performance of the work, as competitor was exceeding the budget and was unable to meet the project schedule.

Section 2: Communication Plan

We operate in the public right of way (ROW) where there are many moving parts that can easily get out of control without the proper channels of communication. Within our field operations, responsibilities are assigned, and personnel are accountable for their duties. There is a strong adherence to chain of command, which assures a safe and well executed project.

Safety is paramount to our company. As part of our safety program, Flotech will conduct a daily toolbox safety meeting as per OSHA guidelines. Flotech Crews are OSHA Confined Space Certified. Furthermore, project site will always have a certified Temporary Traffic Control Advance technician onsite.

On a management level, Flotech's Operations Team meets daily to discuss status of active projects and coordinate personnel days in advance. Field work reports are produced by Crew Leaders for all project activity and submitted to their respective Project Managers daily. Project Managers update project progress logs daily to be review by Director of Operations and upper Management/Owners. Using our GPS Tracking + Fleet Maintenance software, Project Managers are continuously aware of their team and equipment position throughout the day and can schedule operations with time and cost efficiency. Flotech's ownership and management team is constantly aware of each project's performance and outlook.

Since its inception, Flotech has steadily ranked in the highest percentile in FDOT Contractor Field Performance Reports by Districts 1, 4, 5, 6 & 7. Remaining in constant communication, Flotech is

experienced in handling emergency calls and last-minute changes to project schedule if due to weather, client needs or other unforeseen conditions.

Teamwork at Work

During Flotech's impressive project history, we have encountered numerous on-site challenges, all of which we can proudly state have been resolved in a timely and effective manner. For instance, the resolution of schedule conflict in March 2020: Flotech's South Florida crews were assigned to multi night-work on a sectional installation project in Broward County, when we received prime contract City of Miami Beach emergency call for a force main break requiring 24-hour, full week Vactor services. Team communication, resource planning and GPS fleet tracking resulted in the speedy reallocation of resources from our Central Florida center to ensure both projects were serviced, and all commitments were kept.

Section 3: Desilting Plan

Personnel & Equipment

First and foremost, depending on the location and conditions of work, Flotech will propose the optimal approach to either isolate segments of pipe or dewater complete drainage systems with the appropriately sized pumps. Flotech operators are trained how to apply and use the correct jetting nozzle to maximize the safest and most efficient solution. Specialized nozzles are used to move the debris down the pipeline and into the structure. A high-volume vacuum is then used to remove the debris from the structures and into a debris tank which is then disposed at the appropriate government regulated facility. Flotech's investment in high-performance equipment and fleet management program ensures reliable and dependable service. Flotech's 20 Combination Jet-Vac Trucks and Guzzler Trucks are recognized to be the best-in-class fleet, with 2,500 psi/100,000 GPM high pressure Jet Rodder pumps and powerful Positive Displacement blower producing 5000 CFM; capable of pulling material long distances into 15-18 CY debris tanks. This combination of equipment is best suited to efficiently tackle the most demanding blockages.

Disposal Plan

Flotech will adhere to Supplemental Specification 430-94-2 stating "Dispose of all silt and debris removed in the desilting operations in areas meeting Federal, State and Local Rules and Regulations". Flotech will approach the City to stockpile silt at a City accepted location to perform composite soil sampling (permissible 1 per 1,000 tons) to satisfy the parameters of unrestricted fill. There are two potential approaches of disposal, depending on the quality and location of the silt: 1) if debris is <20%, all silt can be disposed of at a Class 1 landfill for the

optimal solution; or 2) if conditions are >20% and project site is far from any landfill location, Flotech would then stockpile and sample for the typical FDEP-approved backfill parameters (Volatile Organic Compounds by EPA Method 8260, Semi-Volatile Organic Compounds by EPA Method 8270, Total Recoverable Petroleum Hydrocarbons by the FL-PRO Method, organochlorine pesticides by EPA Method 8081, PCBs by EPA Method 8082, and for the 8 RCRA metals by EPA Method 6010B). Assuming, as per RFP, that the entire storm system will be flooded at the time of inspection, Flotech Team will need to dewater to evaluate and present a desilting plan to the City.

Section 4: Video Data Management & GIS Upload Plan

Video Data Management

Flotech offers inspection and assessment expertise in video analog technology, high-definition digital technology to identify and document deficiencies. All Flotech CCTV operators are NASSCO certified and produce accurate assessment of pipeline condition that help prevent faulty installations, predict potential failure points, identify deficiencies in need of repair and offer preventative maintenance of drainage systems. Flotech will remain in full compliance with RFP Technical Specification.

Flotech will perform quality control checks on submitted inspection data. The following is the QA/QC procedure to be employed by Flotech Project Manager:

1. Review of a minimum of 5% of the total inspections by each PACP certified operator entering the field CCTV data.
2. Each selected inspection report will be reviewed by Flotech Director of Operations in detail against the inspection digital video.
3. Each field that is populated and those that should have been populated will be counted to produce a “number of fields checked” for the required header information and detailed inspection information. The fields with errors, or missing data, regardless of the error will be totaled to determine the “error count”. The accuracy level will then be calculated as follows: 100-(error count/number of fields checked) *100) = accuracy percentage
4. Flotech Director of Operations will review Flotech Project Manager quality control report and review an additional 5% or more inspections to ensure Flotech quality of work has been met.
5. The accuracy of each PACP certified operator entering the field CCTV data shall meet or exceed 90%. Submittals where the accuracy level falls below 90% will be returned in their entirety for re-inspection and/or resubmittal.
6. Any pipe deficiencies will be submitted to Flotech Estimating Team for repair recommendations.

	REFERENCE NO. 1	REFERENCE NO. 2	REFERENCE NO. 3
Project Name:	Broward County Project 5121, Improvements to Pine Island Road	Parkview Island Manhole Rehabilitation	ICV Storm Drain Maintenance & Repairs
Owner/Client:	M.Villa & Associates	Metro Equipment Services, Inc.	Indian Creek Village
Contact Name:	Martin Villa	Daniel Gonzalez	Roseann Prado
Contact Email:	martinvila1@gmail.com	dg@mesinc.us	rprado@icvps.org
Contact Phone:	305-450-6671	Office: 305-740-3303 Ext: 108; Cell:786-663-2811	305-865-4121
Owner/Client Address:	Broward County Board of County Commissioners	9425 SW 72 ST Suite 150 Miami, FL 33173	9080 Bay Drive, Indian Creek Village, FL 33154
Contract Amount:	$ 310,135.75	$ 30,000.00	$ 52,491.00
Change Orders:	No	No	No
Completed on Schedule: Indicate **Yes** or **No**	Yes	Yes	Yes
Completion Date:	Feb 2013 - Feb 2014	Mar 2014	2013 to Jan 2014
Description/Scope of Work	Install CIPP liner in non-reinforced storm drain pipe S23A to S24, including pre + post CIPP cleaning & CCTV inspection.	Manhole rehabilitation	Rehabilitation of storm drain pipes via CIPP and SCIPP, including pre & Post CIPP cleaning & CCTV Inspection
Remarks:	6,804 LF storm drainage desilting and CCTV inspection, 50 LF CIPP lining, 220 LF chemical grout sealing, chemical grout sealing of 10 structures/manholes	204 LF chemical grout sealing, 1700 SF of epoxy coating	6500 LF storm drainage desilting and CCTV inspection, 425 LF CIPP lining, 60 LF chemical grout sealing

	REFERENCE NO. 4	REFERENCE NO. 5	REFERENCE NO. 6
Project Name:	Palm Beach County Crack Injection Sealing Digester 1, ECR Water Reclamation Facility	Broward County Project 2017-1-183 Riverland Road Phase II Drainage Improvements	E4S67
Owner/Client:	Integ-Crete Construction	DP Development, LLC.	FDOT District 4, Broward Operations
Contact Name:	Joel Percy	Tiffeny C. Martinez	Inna Leskovykh
Contact Email:	joel@integcrete.com	tiffeny@dpdevelopment.com	Inna.Leskovykh@dot.state.fl.us
Contact Phone:	772-252-5285	561-370-2604	954-958-7688
Owner/Client Address:	10550 W Midway Rd, Fort Pierce, FL 34945	2240 NW 22nd St., Pompano Beach, FL 33069	3400 W Commercial Blvd, Fort Lauderdale, FL 33309
Contract Amount:	$ 31,259.88	$ 31,625.00	$ 675,696.48
Change Orders:	No	No	Yes, Supplimental Agreement
Completed on Schedule: Indicate **Yes** or **No**	Yes	Yes	Yes
Completion Date:	Oct 2016	Dec 2018	Apr 2020
Description/Scope of Work	Crack injection of digester tanks	Desilting and pipe liner CIPP Rehabilitation	Cleaning, evaluating, repairing leaks and collecting GIS data for drainage systems on state primary roads
Remarks:	1466 LF chemical grout sealing	275 LF of cleaning, CCTV inspection and CIPP lining	463 LF pipe liner, 0-24"; 252 LF pipe liner, 25-36", 118,818 LF storm drainage desilting and CCTV inspection

	REFERENCE NO. 7	REFERENCE NO. 8	REFERENCE NO. 9
Project Name:	Miami-Dade County RPQ M2016-031.01, Port of Miami MH Rehabilitation	Y17-1119: Stormwater Pipe Video Inspection, Cleaning, Sealing & Related Services	City of Palm Bay, San Fillipo Manhole Coating
Owner/Client:	Lanzo Construction Co Florida	Orange County Public Works, Roads & Drainage Division	Bradley Construction Co. Inc. / Southern Builders of Florida
Contact Name:	Robert "Bobby" Bucci	Michael Baker	Nathan Cosgray
Contact Email:	BobbyB@Lanzo.org	Michael.Baker@ocfl.net	ncosgray@bradleyconstruction.com
Contact Phone:	754-260-5395	407-836-7853	727-442-3117

Owner/Client Address:	125 SE 5th Ct, Deerfield Beach, FL 33441	4200 S. John Young Parkway, Orlando, FL 32839	2119 NE Coachman Road, Clearwater, FL 33765
Contract Amount:	$ 143,061.60	$ 3,964,106.00	$ 26,300.00
Change Orders:	No	No	No
Completed on Schedule: Indicate **Yes** or **No**	Yes	Yes	Yes
Completion Date:	Aug 2020	Nov 2020	Apr 2021
Description/Scope of Work	Rehabilitation of sanitary sewer structures	Stormwater Pipe Video Inspection, Cleaning, Sealing & Related Services	Manhole coating installation and prep
Remarks:	5,900 sq ft of manhole repair and rehabilitation with epoxy, 708 LF chemical grout sealing	336K LF stormwater pipe cleaning & CCTV Inspection (15 to 84 in.); 2.8K LF storm pipe joints sealed (15 to 72 in.); 36K CF cement based grout injection / void sealing; 1.4K leak tests performed (1' to 20'); emergency calls, as requested by County	700 sq ft of manhole repair and rehabilitation with epoxy

	REFERENCE NO. 10	**REFERENCE NO. 11**	**REFERENCE NO. 12**
Project Name:	City of Fort Lauderdale RFQ No. 466-11799, Wastewater Conveyance System Long Ter Rehabilitation (Inflow & Infiltration Contract); 12214-I&I Program	E4U40	ITB 044-0-2020/RS: Stormwater Pipe Assessment & Repair Project
Owner/Client:	Lanzo Construction Co Florida	FDOT District 4, Treasure Coast Operations	Sumter County Board of Commission
Contact Name:	Robert "Bobby" Bucci	Maria Marquez	Shailesh Patel
Contact Email:	BobbyB@Lanzo.org	Maria.Marquez@dot.state.fl.us	Shailesh.Patel@sumtercountyfl.gov
Contact Phone:	754-260-5395	772.429.4911 (office), 772.925.9936 (cell)	352-689-4400
Owner/Client Address:	125 SE 5th Ct, Deerfield Beach, FL 33441	3601 Oleander Avenue, Fort Pierce, FL 34982	7375 Powell Road, Wildwood, FL 34785
Contract Amount:	$ 37,700.06	$ 225,000.00	582,758.51
Change Orders:	No	Yes, Increase 25,000.00	Yes. Increase contract value by $24,000.00
Completed on Schedule: Indicate **Yes** or **No**	Yes	Yes	Yes
Completion Date:	May 2021	Jun 2021	Sep 2021
Description/Scope of Work	Rehabilitation of structures with epoxy (Basin 18A)	Desilting pipe (0 to 24 in.); desilting concrete box culvert; chemical grout repair; cleaning manholes & inlets, pipe liner, spray application; pipe liner cured-in-place; pipe liner slip liner; storm sewer inspection video	Stormwater pipe cleaning, CCTV inspection, pipe lining, pressurized crack grouting, manual grout repairs to pipe & manhole, internal band seals

Remarks:	700 sq ft of manhole repair and rehabilitation with epoxy, 1500 SF epoxy coating of structures	192.3 LF CIPP lining	1779 LF CIPP lining

	REFERENCE NO. 13	REFERENCE NO. 14	REFERENCE NO. 15
Project Name:	Commercial Blvd Outfall Pipe	E7N62-R0	E1U34
Owner/Client:	Kailas Contractors	FDOT District 7, Pinellas Operations	FDOT District 1, Heartland Operations
Contact Name:	Susana Bernal	Philip Fletcher	Cheryl Court
Contact Email:	sbernal@kailascontractors.com	Philip.Fletcher@dot.state.fl.us	Cheryl.Court@dot.state.fl.us
Contact Phone:	954-632-0165	727-575-8309	863-491-1815
Owner/Client Address:	10388 West State Road 84, Davie, FL 33324	5211 Ulmerton Rd, Clearwater, FL 33760	190 West Oak Street Arcadia, FL 34266
Contract Amount:	$ 23,988.00	$ 245,107.00	$ 227,580.66
Change Orders:	No	No	No
Completed on Schedule: Indicate **Yes** or **No**	Yes	Yes	Yes
Completion Date:	Oct 2021	Dec 2021	Sep 2022
Description/Scope of Work	Cured In Place Pipe, 30" x 9mm on Commercial Blvd.	Pipe repair and maintenance, including manhole & inlet cleaning and repair, pipe desilting and CIPP lining	Pipe lining, repair, desilting and video inspection
Remarks:	158 LF CIPP Lining	1779 LF CIPP lining	1156.5 LF CIPP lining

	REFERENCE NO. 16	REFERENCE NO. 17	REFERENCE NO. 18
Project Name:	Broward County PNC2122793B1	ITB-035-0-2021: Storm Sewer Pipe Repair Assessment, Base Yr + Renewal Yr-1	IFB 53-17-18
Owner/Client:	DP Development, LLC.	Sumter County Board of Commission	City of North Miami, Public Works
Contact Name:	Tiffeny C. Martinez	Shailesh Patel	Chuks Okereke, P.E., MSCE

Contact Email:	tiffeny@dpdevelopment.com	Shailesh.Patel@sumtercountyfl.gov	cokereke@northmiamifl.gov
Contact Phone:	561-370-2604	352-689-4400	Office: 305-893-6511, Ext. 15002; Direct: 305-895-9834
Owner/Client Address:	2240 NW 22nd St., Pompano Beach, FL 33069	7375 Powell Road, Wildwood, FL 34785	1815 NE 150 Street, North Miami, FL 33181
Contract Amount:	$ 563,701.25	$561,650/annual term	$ 1,650,723.94
Change Orders:	No	No	Supplimental Agreement to extend contract for an additional year (thru 2022)
Completed on Schedule: Indicate **Yes** or **No**	Yes	Yes	Yes
Completion Date:	Sep 2022	Sep 2022 (base year)	Oct 2022
Description/Scope of Work	CIPP lining of Riverside Drive between Royal Palm Blvd and Atlantic Blvd	29K LF stormwater pipe cleaning & CCTV inspection (0-60 in.); 718 LF pipe lining (0 to 60 in.); pressurized crack grouting (0 to 61 in.); manual grout repairs to pipe & manhole; internal band seals	Cleaning, CCTV inspection, inspection, cleaning and repair of manholes.
Remarks:	2792 LF CIPP lining, 12" to 36"	1,166 LF CIPP lining, 0 to 48"	200 sq ft. of manhole repair and rehabilitation with epoxy

	REFERENCE NO. 19	**REFERENCE NO. 20**	**REFERENCE NO. 21**
Project Name:	Y20-102-RM: Stormwater Pipe Video Inspection, Cleaning, Sealing & Related Services	E5V32	E7P38-R0
Owner/Client:	Orange County Public Works, Roads & Drainage Division	FDOT District 5, Brevard Operations	FDOT District 7, Pinellas Operations
Contact Name:	Michael Baker	Kelly Moss	Philip Fletcher
Contact Email:	Michael.Baker@ocfl.net	Kelly.Moss@dot.state.fl.us	Philip.Fletcher@dot.state.fl.us
Contact Phone:	407-836-7853	321-634-6117 (direct), 321-634-6100 (office), 321-200-2762 (cell)	727-575-8309
Owner/Client Address:	4200 S. John Young Parkway, Orlando, FL 32839	555 Camp Road, M/S 590, Cocoa, FL 32927	5211 Ulmerton Rd, Clearwater, FL 33760
Contract Amount:	$ 4,413,368.05	$ 501,232.00	$ 172,479.30
Change Orders:	No	Yes. Add on scope (CIPP lining)	No
Completed on Schedule: Indicate **Yes** or **No**	Yes	Yes	Yes
Completion Date:	Jan 2023	Feb 2023	May 2023

Description/Scope of Work	Stormwater Pipe Video Inspection, Cleaning, Sealing & Related Services	Desilting pipe (0 to 36 in.); cleaning & sealing existing pipe joint (15 to 36 in.); cleaning manholes & inlets, repairing leaks in manholes & inlets; desilting pipe underdrains (4 to 6 in.); storm sewer inspection video (0 to 36 in.); cured-in-place pipe liner (0 to > 61 in.)	Pipe repair and maintenance
Remarks:	199K LF stormwater pipe cleaning (15 to 84 in.); 195K CCTV inspection (15 to 84 in.); 980 LF box culvert cleaning; 2.7K storm pipe joints sealed (15 to 72 in.); 99.5K CF cement based grout injection / void sealing; 1.7K leak tests performed (1' to 20'); emergency calls, as requested by County	415 LF CIPP lining, 0-36"	1,149.3 LF CIPP, 0 to 48"

	REFERENCE NO. 22	**REFERENCE NO. 23**	**REFERENCE NO. 24**
Project Name:	E1V45-R0	City of Fort Lauderdale NE 15 Avenue & Poinsettia Drive Stormwater Improvements Project	City of Fort Lauderdale Holiday Drive Stormwater Improvements Project
Owner/Client:	FDOT District 1, Manatee Operations	Southeastern Engineering Contractors, Inc.	Southeastern Engineering Contractors, Inc.
Contact Name:	Michael Adams	Fredy Vargas	Fredy Vargas
Contact Email:	Michael.adams@dot.state.fl.us	fred@southeasterneng.com	fred@southeasterneng.com
Contact Phone:	941-708-4448	305-557-4226, ext 4	305-557-4226, ext 4
Owner/Client Address:	14000 SR 64 East, Bradenton, FL 34212	12054 NW 98th Ave, Hialeah, FL 33018	12054 NW 98th Ave, Hialeah, FL 33018
Contract Amount:	$ 538,622.50	$ 17,500.00	$ 17,500.00
Change Orders:	No	No	No
Completed on Schedule: Indicate **Yes** or **No**	Yes	Yes	Yes
Completion Date:	Jul 2023	Sep 2023	Sep 2023
Description/Scope of Work	Pipe repair, lining, subsurface grout, polyurethane injections and structure sealing	CIPP @ 1900 NE 15th Ave	CIPP @ 1900 NE 15th Ave
Remarks:	2989.5 LF CIPP lining, 0 to 48"	91.9 LF of CIPP, 15"	51 LF of CIPP, 15"

	REFERENCE NO. 25	**REFERENCE NO. 26**	**REFERENCE NO. 27**
Project Name:	Niche Apartments	E56C2	E5X17

Owner/Client:	SiteCrafters of Florida	FDOT District 5, DeLand Operations	FDOT District 5
Contact Name:	Ted Kempton	Daniel Riera Carbo	Alison Rodriguez
Contact Email:	ted@sitecraftersfl.com	Daniel.RieraCarbo@dot.state.fl.us	Alison.Rodriguez@dot.state.fl.us
Contact Phone:	813-280-9039	Office: 321-319-8124; Cell: 407-361-8211	Office: 386-740-3425 Cell: 386-279-9598
Owner/Client Address:	3242 Henderson Blvd, Tampa, FL 33609	420 W. Landstreet Road, Orlando, FL 32824	1650 N. Kepler Blvd., DeLand, FL 32724
Contract Amount:	$ 47,515.40	$ 750,000.00	$ 500,000.00
Change Orders:	No	No	No
Completed on Schedule: Indicate **Yes** or **No**	Yes	Yes	Yes
Completion Date:	Aug 2023	Ongoing	Ongoing
Description/Scope of Work	Installation of CIPP, pre & post CIPP installation cleaning and CCTV inspection	Drainage system repairs	Culvert pipe and manhole repair, pipe lining, joint sealing, desilting and video on various state roadways
Remarks:	245 LF CIPP Linging, 15"	260 LF CIPP lining, 0 to 24"	613.6 LF CIPP lining, 320 LF slip liner

	REFERENCE NO. 28	**REFERENCE NO. 29**	**REFERENCE NO. 30**
Project Name:	E5X53	E4W11	BEC65: Storm Drain Video Inspection Services at Various Locations Along Florida's Turnpike System
Owner/Client:	FDOT District 5, DeLand Operations	FDOT District 4, Treasure Coast Operations	FDOT District 8, Turnpike Enterprise
Contact Name:	Daniel Riera Carbo	Maria Marquez	Erin Yao
Contact Email:	Daniel.RieraCarbo@dot.state.fl.us	Maria.Marquez@dot.state.fl.us	Erin.Yao@dot.state.fl.us
Contact Phone:	Office: 321-319-8124; Cell: 407-361-8211	Office: 772.429.4911; Cell: 772.925.9936	407-264-3479 (office), 407-756-7063 (cell)
Owner/Client Address:	420 W. Landstreet Road, Orlando, FL 32824	3601 Oleander Avenue, Fort Pierce, FL 34982	MP 263, Blg 5315, Ocoee, FL 34761
Contract Amount:	$ 400,000.00	$ 300,000.00	Work order based. 1,672,723.60 assigned to date. 1,130,596.00 completed to date
Change Orders:	No	No	0

Completed on Schedule: Indicate **Yes** or **No**	Yes	Yes	Yes
Completion Date:	Ongoing	Ongoing	As of Mar 2023
Description/Scope of Work	Desilting, video inspections and repairs of drainage facilities	Drainage repairs and improvements on primary state roads	Desilting & CCTV video inspection of pipes (0 to >61 in); desilting & CCTV video inspection of box culvert
Remarks:	215 LF CIPP lining, 0-60"	952.8 LF CIPP, 0 to 36"	Desilting & CCTV video inspection of pipes (0 to >61 in); desilting & CCTV video inspection of box culvert

	REFERENCE NO. 31	**REFERENCE NO. 32**	**REFERENCE NO. 33**
Project Name:	RFP No: 22-0726200	No 23-00246	ITB-22-09
Owner/Client:	City of Opa-locka, Public Works & Utilities Department	City of Wildwood, Public Works	Miami-Dade Expressway Authority
Contact Name:	Owen Carney	Thomas Rigwood, Valorie Hodges	Orlando Sanchez
Contact Email:	ocarney@Opalockafl.gov	trigwood@wildwood-fl.gov; vhodges@wildwood-fl.gov	osanchez@eacconsult.com
Contact Phone:	O: (305) 953-2828 Ext.: 3004, C: (786) 877-4015	352-330-1343 ext. 401	O: 305-265-5488, C: 305-762-2667
Owner/Client Address:	12950 Lejeune (N.W. 42nd Ave), Opa-locka, Florida 33054	100 N. Main Street, Wildwood, FL 34785	5959 Blue Lagoon Drive, Suite 410, Miami, FL 33126
Contract Amount:	93,501.10	314,484.14	54,385.00
Change Orders:	0	0	0.00
Completed on Schedule: Indicate **Yes** or **No**	Yes	Yes	Yes
Completion Date:	Apr-23	Apr-23	Apr-23
Description/Scope of Work	4262 LF Hydro Jet Storm Drain Cleaning; 3447 LF CCTV Storm Pipe, (12 to 24 in)	32K LF stormwater pipe cleaning & CCTV inspection (0-60 in.)	Pipe desilting, manhole and inlet cleaning and sealting, cleaning of box culverts and other drainage structures
Remarks:	4262 LF Hydro Jet Storm Drain Cleaning; 3447 LF CCTV Storm Pipe, (12 to 24 in)	32K LF stormwater pipe cleaning & CCTV inspection (0-60 in.)	24,840 LF Desilting Pipe (0 to 36 in.), cleaning and sealing of 304 manholes

	REFERENCE NO. 34
Project Name:	City of Fort Myers: SSES - Pipeline Repair & Rehabilitation
Owner/Client:	McKim & Creed
Contact Name:	Allyson Mauck
Contact Email:	AMauck@mckimcreed.com
Contact Phone:	O: 727.442.7196 | M: 850.207.4353
Owner/Client Address:	1365 Hamlet Avenue, Clearwater, FL 33756-3331
Contract Amount:	$1,616,487.80
Change Orders:	0
Completed on Schedule: Indicate **Yes** or **No**	Yes
Completion Date:	Aug-26
Description/Scope of Work	20,844 LF of 8" Sanitary Sewer 1,243 LF of 10" Sanitary Sewer
Remarks:	

José L. Ferré

Managing Member

PROFESSIONAL PROFILE

For the past 26 years Mr. Ferré has worked as a specialty underground utility contractor dedicated to pipeline maintenance and trenchless rehabilitation of wastewater collection systems. Since 1998, Mr. Ferré has been responsible for the project management and installation of over 500,000 linear feet of Cured In Place Pipe Lining (CIPP) rehabilitation ranging in sizes from 4" to 84", and 10,000,000 linear feet of pipe cleaning and condition assessment inspection.

1/12 - Current FLOTECH ENVIRONMENTAL, LLC., Miami, FL
Primary Qualifier & Managing Member Mr. Ferré founded Flotech Environmental in January of 2012 to service the growing Inflow & Infiltration (I/I) and defiltration challenges found in deteriorating storm water drainage and sanitary sewer infrastructure throughout Florida. With a skilled workforce of over 95 professionals, Flotech has serviced over seven million linear feet of wastewater conveyance systems qualifying Flotech today as one of Florida's premier trenchless rehabilitation contractors. Flotech's core scope of services include pipeline cleaning and condition assessment, thermoformed pipe lining and manhole rehabilitation, chemical grout sealing, flood mitigation, soil stabilization, industrial jet vacuum services and liquid waste hauling. Bonding Capacity: $13M per project / $20M aggregate.

4/04 - 9/11 ENVIROWASTE SERVICES GROUP, INC., Miami, FL
Primary Qualifier & Vice President From 4/2004 to 3/2007 Mr. Ferré was responsible for starting up and managing a 30-man workforce dedicated to pipeline inspection and rehabilitation, both open cut and trenchless methods. As Chief Estimator, from 3/2007 to 9/2011, Mr. Ferré built a $50 million backlog for water & sewer, roadway and marine construction in Texas and Florida. As a Troubleshooter, from 4/2010 to 7/2010, Mr. Ferré turned around five wastewater maintenance contracts with the City of Houston, TX.

4/03 - 4/04 SOS CONSTRUCTION, INC. (subsidiary of Houston based Re-Pipe, Inc.), Miami, FL
Operations Manager Mr. Ferré had direct line responsibility of a 60-personnel operation consisting of pipeline prepping crew, two wet-out crews, three CIPP installation crews (100,000. linear feet installed), service lateral reinstatement crew, chemical grout sealing crew, large diameter stormwater cleaning crew, three CIPP sectional lining crews, QA/QC operation, warehouse & procurement operations.

10/98 - 1/03 INSITUFORM TECHNOLOGIES, INC., Jacksonville, FL
Project Manager From 10/1998 to 4/2001 Mr. Ferré was responsible for the rehabilitation of sanitary sewer (up to 5 crews) to meet Miami-Dade Water and Sewer Department EPA Consent

Decree requirements. From 5/2001 to 1/2003, Mr. Ferré was reassigned to project manage over fifty ongoing trenchless pipeline rehabilitation projects amounting to $23 million per annum P&L responsibility. In total, Mr. Ferré had direct line responsibility for approximately 270,000 linear feet of CIPP installed in three regions within Florida and south Georgia.

PIPELINE REHABILITATION PROJECT EXPERIENCE

- Indian Creek Village, FL Storm Sewer Inspection and Rehabilitation - $ 390,000
- Miami Dade, FL WASD S-803 - 2 Year Sectional Lining Repair $ 2,000,000
- Miami Dade, FL WASD S-793 Countywide One-Year Contract Removal/Replacement and Rehabilitation of Sewer Laterals $ 450,000
- Miami Dade, FL S-770 MH to MH (CIPP) - $ 4,600,000
- Miami Dade, FL S-768 Sectional Point Repairs - $ 1,562,000
- City of Holly Hill, FL - MH to MH CIPP $ 803,000
- City of Port Orange, FL - MH to MH CIPP $ 697,000
- Miami Dade, FL S-760 MH to MH (Fold & Form) $ 5,000,000 contract (Managed EPA 2000 Consent Decree, Project required as many as 5 CIPP Main Line Crews for 3 months, 35,000 LF /month)
- Miami Dade, FL S 756 MH to MH (CIPP) $ 3,000,000 contract (EPA 2000 Consent Decree)
- Town of Palm Beach, FL MH to MH (CIPP) - $ 1,000,000 Contract
- City of North Miami, FL MH to MH (CIPP) $ 850,000 Contract
- City of West Palm Beach, FL MH to MH (CIPP) Annual Contract
- Long Boat Key, FL - 150 CIPP Lateral Repairs - Annual Contract
- Seacoast Utilities - MH to MH (CIPP) & 80CIPP Lateral Repairs
- City of Fort Lauderdale, FL - MH to MH (CIPP) - $ 2,000,000
- City of Hallandale, FL - MH to MH (CIPP) & 150 CIPP Lateral Repairs
- City of Delray Beach, FL - MH to MH CIPP & 80 CIPP Lateral Repairs
- City of Pompano Beach, FL - MH to MH (CIPP) & Sanitary Sewer Repairs
- City of Lakeland, FL - MH to MH(CIPP)
- City of Sanford, FL - MH to MH(CIPP)
- City of Brandon, FL - MH to MH (CIPP)
- City of Bradenton, FL MH to MH (CIPP)
- City of Tampa, FL - 14 Street Project - MH to MH (CIPP)
- City of Sarasota, FL MH to MH (CIPP)
- Osceola County, FL MH to MH (CIPP)

EDUCATION

- **GEORGIA INSTITUTE OF TECHNOLOGY, Atlanta, GA**
  Master of Architecture, 1986

- **UNIVERSITY OF MIAMI, Coral Gables, FL**
  Bachelor of Arts, 1982

Certified General Contractor Florida - CGC061052 (*since 1999*)

Rafael Naveiras

Director of Operations

PROFESSIONAL SUMMARY

20+ years in trenchless rehabilitation with emphasis on CIPP lining, manhole renewal, and pipeline rehabilitation. Skilled in high-volume CIPP installations, crew management, and advanced curing techniques. Proven leadership delivering large-scale, complex lining projects as Project Manager and Director of Operations.

2022 - Current: FLOTECH ENVIRONMENTAL, LLC

As **Superintendent and Director of Operations**, he led CIPP lining and manhole rehabilitation projects, overseeing crews and managing production output to ensure compliance with bid specifications and safety standards.

2018 - 2022: JENNINGS PIPELINING CIPP

As an **Installer and Cutter**, he performed CIPP installations and cutter operations, specializing in manhole rehabilitation using the Raven system. He supported high-volume installation projects, contributing to measurable footage achievements and overall project success.

2014 – 2018: ENVIROWASTE SERVICES GROUP, INC

As **Project Manager and Director of Operations**, he directed multiple trenchless rehabilitation projects, managing crew scheduling, job planning, and field execution. He delivered consistent results in CIPP lining and infrastructure upgrades, ensuring projects were completed efficiently and to specification.

2004 – 2014: INSITUFORM TECHNOLOGIES, LLC

As a **CIPP Cutter and Installer**, he installed over 1.82 million linear feet of CIPP and managed 52,000 lateral taps across multiple projects. He consistently achieved a production rate of 3,500 linear feet per week and up to 100 laterals per week.

2001 – 2003: SOS

As an **Assistant**, he supported CIPP operations by assisting with wet-out processes and providing crew support for lateral inspection and rehabilitation setup.

Geimar Pino

Project Manager

PROFESSIONAL SUMMARY

10 years of experience in trenchless rehabilitation with emphasis on CIPP lining and sewer rehabilitation. Skilled in high-volume installations, project supervision, and operations management. Extensive work with municipalities across New York, New Jersey, and Florida, consistently delivering projects to specification and on schedule.

2025 - Current: FLOTECH ENVIRONMENTAL, LLC

As Project Manager, oversaw CIPP installations and sewer rehabilitation projects, coordinating crews and ensuring compliance with municipal and DOT standards.

- Total footage: 3,500 feet
- FDOT
- Johnson Davis
- City of Winter Springs
- City of DeLand

2019 - 2025: ADVANCED PLUMBING TECHNOLOGIES / PIPELINER PROS

Served as Operations Manager (Pipeliner) and Superintendent (Advanced Plumbing) for sewer rehabilitation projects across multiple municipalities.

- Installed 18,000 feet (all sewer)
- Projects included: Orange County, City of Melbourne, City of Tampa, Jacksonville

2015 - 2019: HINTERLAND GROUP

Worked in progressive leadership roles as Installer, Field Superintendent, and Project Manager.

- 3 years as PM and Installer: 40,000 feet sanitary, 20,000 feet storm
- 1 year as Project Manager and 2 years as Field Superintendent
- Projects included: Riviera Beach, Belle Glade, Palm Beach County, Port St. Lucie, Port Charlotte

2013 - 2015: ENVIROWASTE SERVICES GROUP

Installer for sewer rehabilitation projects across South Florida.

- Total footage: 15,000 feet (all sewer)
- City of Miami, City of Hialeah, Hollywood, Miami Beach

2008 - 2013: NATIONAL WATERMAIN

Installer for large-scale sewer rehabilitation projects, averaging 20,000 feet per year over 5 years.

- Total footage: 100,000 feet (mostly sewer)
- Locations included: New York City, Morris County, Passaic County, Upstate NY, Rochester NY, FDOT South Jersey

Michael Key

Field Supervisor

PROFESSIONAL SUMMARY

25 years of experience in trenchless rehabilitation with emphasis on CIPP lining for storm and sewer systems. Skilled in high-volume CIPP installations, project supervision, and production management. Proven record of delivering large-scale projects across multiple municipalities and counties, ensuring compliance with safety and bid specifications.

2024 - Current: FLOTECH ENVIRONMENTAL, LLC

As **CIPP Installer and Superintendent**, managed installations for sewer and storm lining projects throughout Florida. Oversaw daily production and coordinated with municipalities and contractors to ensure high-quality results.

- City of Winter Springs (2025): 2,200 feet
- FDOT (2025): 1,900 feet
- Johnson Davis: 1,300 feet
- Southeastern Engineering: 800 feet
- Deland: 580 feet
- City of Riviera Beach: 700 feet
- CW Roberts: 800 feet

Total footage: 10,000 feet (2024); 12,000 feet (2025 projected)

2018 - 2024: MG UNDERGROUND

As **Installer** on storm and sewer rehabilitation projects, focusing on municipal contracts.

- Pinellas County: 1,000 feet

2017 - 2018: NU PIPE, LLC

Led storm rehabilitation efforts on multiple projects.

- Daytona: 1,200 feet (all storm)

2015 - 2017: ACCURATE PLUMBING SERVICES

Performed sewer and storm CIPP installations in Florida.

- Tequesta: 5,000 feet (mostly sewer, 2,000 feet storm)

1999 - 2015: GRANITE INLINER, LLC

Led trench rehabilitation efforts across Orange County and North Carolina. Specialized in high-volume storm and sewer lining.

- Installed over 500,000 feet (90% storm / 10% sewer)
- Averaged 5,000–10,000 feet annually
- Collaborated with local municipalities and contractors on long-term rehabilitation programs

Ron DeSantis, Governor

Melanie S. Griffin, Secretary

STATE OF FLORIDA
DEPARTMENT OF BUSINESS AND PROFESSIONAL REGULATION

CONSTRUCTION INDUSTRY LICENSING BOARD

THE GENERAL CONTRACTOR HEREIN IS CERTIFIED UNDER THE
PROVISIONS OF CHAPTER 489, FLORIDA STATUTES

FERRE, JOSE L

FLOTECH ENVIRONMENTAL, LLC
675 SOUTH DRIVE SUITE 401
MIAMI SPRINGS FL 33166

LICENSE NUMBER: CGC061052

EXPIRATION DATE: AUGUST 31, 2026

Always verify licenses online at MyFloridaLicense.com

ISSUED: 09/03/2024

Do not alter this document in any form.

This is your license. It is unlawful for anyone other than the licensee to use this document.

ACRISURE®

April 22, 2024

RE: Flotech Environmental, LLC

To Whom It May Concern,

This is to advise you that our office provides Bid, Performance, and Payment Bonds for Flotech Environmental, LLC. Their Surety is United States Fire Insurance Company which carries an A.M. Best rating of A XV and is listed in the Department of the Treasury's Federal Register.

Based upon normal and standard underwriting criteria at the time of the request, we should be in a position to provide Performance and Payment Bonds in the amount of $13,000,000.00 for single projects and $20,000,000.00 total aggregate. We obviously reserve the right to review final contractual documents, bond forms, and obtain satisfactory evidence of funding prior to final commitment to issue bonds.

Flotech Environmental, LLC is an excellent contractor and we hold them in the high regard. We feel extremely confident in our contractor and encourage you to offer them an opportunity to execute any upcoming projects.

This letter is not assumption of liability; nor is it a bid or performance and payment bond. It is issued only as a bonding reference requested by our client.

Please do not hesitate to contact this office if you have any questions.

Sincerely,

Charles J. Nielson
Resident Agent

FLOTECH ENVIRONMENTAL

Fleet Inventory List

Unit #	Make	YR	Model
V 5	STERLING	2002	LT8500 / VACTOR 2100
V 8	International	2005	7600 / VACTOR 2100
V 9	KENWORTH	2015	T800 / VACTOR 2100
V 10	FREIGHTLINER	2017	114SD / VACTOR 2115
V 11	FREIGHTLINER (TOTALLI	2018	114SD / VACTOR 2115
V 12	FREIGHTLINER	2018	114SD / VACTOR 2100
V 13	STERLING	2007	LT7500 / VACTOR 2100
V 14	PETERBUILT	2019	567 / VACTOR 2115
V 15	FREIGHTLINER	2019	114SD / VACTOR 2115
V 16	PETERBUILT	2019	567 / VACTOR 2115
V 17	PETERBUILT	2018	567 / VACTOR 2115
V 18	PETERBUILT	2018	567 / VACTOR 2115
V 19	KENWORTH	2012	T440 / VACTOR 2100
V 20	KENWORTH	2019	T880 / VACTOR 2115
V 21	PETERBUILT	2019	567 / VACTOR 2115i
V 22	KENWORTH	2019	T880 / VACTOR 2100
V 23	PETERBUILT	2020	567 / VACTOR 2115i
V 24	PETERBUILT	2020	567 / VACTOR 2115i
V 25	KENWORTH	2020	T880 / VACTOR 2100i
V 26	PETERBUILT	2024	567 / VACTOR 2115i
V 27	PETERBUILT	2021	567 / VACTOR 2115i
V 28	PETERBUILT	2024	567 / VACTOR 2115i
V 29	FREIGHTLINER	2020	114SD / VACTOR 2115i
V 30	PETERBUILT	2021	567 / VACTOR 2115i
V 31	KENWORTH	2021	T880 / VACTOR 2100i
V 32	FREIGHTLINER	2013	114SD / VACTOR 2115
V 33	WESTERN STAR	2024	47X / GAPVAX MC1312 COMBO BODY
V 34	PETERBILT	2020	567 / VACTOR 2115i
V 35	PETERBILT	2021	567 / VACTOR 2115i
Unit #	**Make**	**YR**	**Model**
TV Inspection			
TV 4	FORD	2014	F550 + CUES MAINLINE + DUC
TV 6	FORD	2017	F550 + ARIES LATERAL
TV 7	FORD	2017	F550 + CUES GROUT
TV 8	FORD	2007	F450 + CUES MAINLINE
TV 9	FORD	2018	F750 + GROUT
TV 10	FORD	2017	F550 + CUES LAMP2
TV 11	FORD	2019	F550 + CUES MAINLINE
TV 12	FORD	2008	E450 + CUES MAINLINE
TV 13	FORD	2018	F750 + CUES GROUT
TV 14	FORD	2021	F550 + CUES MAINLINE
TV 15	FORD	2016	E450 + CUES LATERAL
TV 16	FORD	2016	F550 + CUES LATERAL
TV 17	FORD	2021	F550 + CUES LATERAL
TV 18	MERCEDES	2023	SPRINTER 3500 + RAUSCH LATERAL
TV 19	FORD	2020	F550 + CUES + SCHWALM CUTTER
TV 20	MERCEDES	2023	SPRINTER 3500 + RAUSCH LATERAL
Unit #	**Make**	**YR**	**Model**

Pick-up			
PK 3	FORD	2015	F150 EXT CAB V6 4x2
PK 4	FORD (SOLD)	2005	F350 CREW MECHANIC BODY
PK 6	FORD	2015	F250 CREW DIESEL 4x2
PK 8	FORD	2012	F150 V8 4x2
PK 10	Dodge	2012	RAM 3500 FLATBED 4x4
PK 12	Ford	2016	F150 V6 4x2
PK 16	FORD	2014	F150 V6 2WD
PK 17	CHEVROLET	2017	Silverado 2500HD 4x4
PK 18	FORD	2017	F150 EXT CAB V6 4x2
PK 21	FORD	2017	F250 XL CREW 4x4
PK 23	FORD	2015	F350 UTILITY 4x2
PK 24	FORD	2018	F450 CREW CAB STAKEBED 4x4
PK 26	FORD	2011	F250 XL REGULAR CAB 4x2
PK 27	CHEVROLET	2015	SILVERADO 2500HD UTILITY 4x2
PK 28	FORD	2011	F250 CREW CAB 4x2
PK 29	International	2002	4300 ATTENUATOR FLATBED
PK 30	HONDA	2022	RIDGELINE
PK 31	NISSAN	2017	TITAN XD 4x2
PK 33	DODGE	2012	RAM 1500 4x2
PK 34	CHEVROLET	2022	SILVERADO 1500 LT CREW
PK 35	NISSAN	2017	TITAN S 4x2
PK 36	DODGE	2021	RAM 2500 4x4 CREW CAB
PK 37	NISSAN	2021	TITAN S 4x4 EXT CAB
PK 39	FORD	2021	F150 XL CREW CAB 4x2
PK 40	TOYOTA	2022	TACOMA EXT CAB 4x2
PK 42	FORD	2024	F150 STX CREW CAB 4x2
PK 43	FORD	2024	F150 STX CREW CAB 4x2
PK 44	FORD	2023	F150 XL REGULAR CAB 4x2
PK 45	FORD	2013	F250 XL REGULAR CAB 4x2
PK 46	FORD	2018	F450 XL FLATBED 4x2
PK 47	FORD	2015	F250 XL REGULAR CAB 4x2
PK 48	TOYOTA	2023	TACOMA EXT CAB 4x2
PK 49	TOYOTA	2024	TACOMA EXT CAB 4x2
PK 50	FORD	2023	F150 XL REGULAR CAB 4x2
PK 51	FORD	2024	F150 XL EXT CAB V8 4x4
PK 52	FORD	2024	F150 XL EXT CAB V8 4x4
PK 53	CHEVROLET	2023	SILVERADO 2500HD REGULAR CAB 4x2
PK 54	FORD	2020	F250 UTILITY 4x2
PK 55	FORD	2018	F250 FLATBED 4x2
PK 56	FORD	2023	F250 XL CREW 4x4
PK 57	FORD	2021	F250 XL EXT CAB 4x4
PK 58	FORD	2021	F550 XL FLATBED 4x4
PK 59	FORD	2021	F550 XL FLATBED 4x4
PK 60	FORD	2022	F250 FLATBED 4x2
Unit #	**Make**	**YR**	**Model**
Other			
Pump 1	International	2011	Pump Truck
Pump 2	Gorman-Rupp	2010	PA6D60-4045T 6" Trash Pump
Pump 3	MULTIQUIP	2020	MQ62TKT 6" Trash Pump
Pump 4	MULTIQUIP	2022	MQ62TKT 6" Trash Pump
Pump 5	Thompson	2007	4JSC-108 / 7504ATP 4" Trash Pump
Pump 6	MULTIQUIP	2022	MQ600HTB 6" Trash Pump
Pump 7	MULTIQUIP	2022	MQ600HTB 6" Trash Pump

Pump 8	Thompson	2007	6TSV-425 / 7504ATP 6" Trash Pump
Pump 9	International	2025	HV607 / US Tanks 4,200 Gal
Pump 10	Godwin	2012	CD150M 6" Trash Pump
Pump 11	Thompson	2021	4JSCM-DYST / 7504APT 4" Trash Pump
Pump 12	Thompson	2008	4DDH-814 / 4" Diaphragm Pump
AB1	WANCO	2018	Arrow-Board
AB2	WANCO	2018	Arrow-Board
AB3	WANCO	2018	Arrow-Board
AB4	Work Area Protection	2012	Arrow-Board
AB5	Work Area Protection	2006	(PARTS) Arrow-Board
AB6	Work Area Protection	2006	Arrow-Board
AB7	WANCO	2012	Arrow-Board
AB8	WANCO	2014	Arrow-Board
AB9	Work Area Protection	2000	Arrow-Board
AB10	Work Area Protection	2009	WAWW-25 Arrow-Board
AB11	WANCO	2011	WTSP Arrow-Board
AB12	SolarTech	2018	Silent Sentinel
AB13	WANCO	2024	WECO Arrow-Board
AB14	WANCO	2024	WECO Arrow-Board
AB15	WANCO	2024	WECO Arrow-Board
AB16	WANCO	2024	WECO Arrow-Board
AB17	WANCO	2024	WECO Arrow-Board
BL 1	KENWORTH	2021	T880 / Rush Inversion Heater
TL 1	AOK	2008	ENCLOSED TRAILER
TL 2	ARNG	2017	18' ENCLOSED TRAILER
TL 3	Diamond Cargo	2016	16' ENCLOSED TRAILER
TL 4	DOOSAN	2010	COMPRESSOR TRAILER
TL 5	SURE TRAC / STANLEY	2017	MHP32232100 EASMENT MACHINE
TL 7	O'BRIEN	2008	7040-SC JETTER TRAILER
TL 9	LOOK	2017	ELEMENT 28' ENCLOSED TRAILER
TL 10	DOOSAN	2012	P185WYM COMPRESSOR TRAILER
TL 11	PUTZMEISTER	2014	TK40
TL 12	WACKER NEUSON	2016	LTN-6KVS
TL 13	TLC	2024	Cougar Chemical Pressure Washer TRL
TL 14	ROCK SOLID CARGO	2024	7x14 ENCLOSED CARGO TRAILER
TL 15	X-STAR	2025	750 GALLON FUEL TRAILER
CV 2	CHEVROLET	2014	EXPRESS 1500 CARGO VAN
RF1	FORD	2023	F750 + 26' THERMOKING REEFER BOX
UT1	LAND ROVER	2020	DEFENDER 110S
UT5	LAND ROVER	2025	DEFENDER 110 X-DYNAMIC
UT6	LAND ROVER	2025	DEFENDER 110 X-DYNAMIC

State of Florida

Minority Business Certification

Flotech Environmental LLC

Is certified under the provisions of
287 and 295.187, Florida Statutes, for a period from:

04/21/2025 to 04/21/2027



Pedro Allende
Florida Department of Management Services

FLORIDA DEPARTMENT OF MANAGEMENT SERVICES
SUPPLIER DEVELOPMENT

Office of Supplier Development
4050 Esplanade Way, Suite 380
Tallahassee, Florida 32399
850-487-0915
www.dms.myflorida.com/osd

FLOTECH ENVIRONMENTAL

Civil Conviction and/or Civil Litigation Statement

April 6, 2026

Flotech Environmental, LLC discloses the below closed injunction for employee Non-Compete:

Case No. 50-2020-CA-013984-XXXX-MB

HINTERLAND GROUP, INC v. CURT MARING and FLOTECH ENVIRONMENTAL, LLC

Injunction Order

The above-mentioned legal case was active 2020 to 2022 and is now settled. This case does not interfere with our work in the proposal location and should not affect this project, should contract be awarded.

Jose L. Ferre, Managing Member

Document A310™ – 2010

Conforms with The American Institute of Architects AIA Document 310

Bid Bond

CONTRACTOR:
(Name, legal status and address)

FloTech Environmental, LLC
657 South Drive, Suite 401
Miami Springs, FL 33166

SURETY:
(Name, legal status and principal place of business)

United States Fire Insurance Company
305 Madison Avenue
Morristown, NJ 07960

OWNER:
(Name, legal status and address)

City of St. Pete Beach
155 Corey Ave
St. Pete Beach, FL 33706

BOND AMOUNT: $ 5%

Five Percent of Amount Bid

PROJECT:
(Name, location or address, and Project number, if any)

Wastewater System Rehabilitation Services

This document has important legal consequences. Consultation with an attorney is encouraged with respect to its completion or modification.

Any singular reference to Contractor, Surety, Owner or other party shall be considered plural where applicable.

The Contractor and Surety are bound to the Owner in the amount set forth above, for the payment of which the Contractor and Surety bind themselves, their heirs, executors, administrators, successors and assigns, jointly and severally, as provided herein. The conditions of this Bond are such that if the Owner accepts the bid of the Contractor within the time specified in the bid documents, or within such time period as may be agreed to by the Owner and Contractor, and the Contractor either (1) enters into a contract with the Owner in accordance with the terms of such bid, and gives such bond or bonds as may be specified in the bidding or Contract Documents, with a surety admitted in the jurisdiction of the Project and otherwise acceptable to the Owner, for the faithful performance of such Contract and for the prompt payment of labor and material furnished in the prosecution thereof; or (2) pays to the Owner the difference, not to exceed the amount of this Bond, between the amount specified in said bid and such larger amount for which the Owner may in good faith contract with another party to perform the work covered by said bid, then this obligation shall be null and void, otherwise to remain in full force and effect. The Surety hereby waives any notice of an agreement between the Owner and Contractor to extend the time in which the Owner may accept the bid. Waiver of notice by the Surety shall not apply to any extension exceeding sixty (60) days in the aggregate beyond the time for acceptance of bids specified in the bid documents, and the Owner and Contractor shall obtain the Surety's consent for an extension beyond sixty (60) days.

If this Bond is issued in connection with a subcontractor's bid to a Contractor, the term Contractor in this Bond shall be deemed to be Subcontractor and the term Owner shall be deemed to be Contractor.

When this Bond has been furnished to comply with a statutory or other legal requirement in the location of the Project, any provision in this Bond conflicting with said statutory or legal requirement shall be deemed deleted herefrom and provisions conforming to such statutory or other legal requirement shall be deemed incorporated herein. When so furnished, the intent is that this Bond shall be construed as a statutory bond and not as a common law bond.

Signed and sealed this 8th day of April, 2026

(Witness) Yinet Quintana

FloTech Environmental, LLC
(Principal) *(Seal)*

By:
(Title) Jose L. Ferre, Managing Member

(Witness) Cindy Lyons

United States Fire Insurance Company
(Surety) *(Seal)*

By:
(Title) Joseph Penichet Nielson Attorney-in-Fact

S-0054/AS 8/10

POWER OF ATTORNEY
UNITED STATES FIRE INSURANCE COMPANY
PRINCIPAL OFFICE - MORRISTOWN, NEW JERSEY

00927

KNOW ALL MEN BY THESE PRESENTS: That United States Fire Insurance Company, a corporation duly organized and existing under the laws of the state of Delaware, has made, constituted and appointed, and does hereby make, constitute and appoint:

Ian A. Nipper, David Russell Hoover, Joseph Penichet Nielson, Charles David Nielson,
Charles Jackson Nielson, Shawn Alan Burton, Jarrett Merlucci

each, its true and lawful Attorney(s)-In-Fact, with full power and authority hereby conferred in its name, place and stead, to execute, acknowledge and deliver: Any and all bonds and undertakings of surety and other documents that the ordinary course of surety business may require, and to bind United States Fire Insurance Company thereby as fully and to the same extent as if such bonds or undertakings had been duly executed and acknowledged by the regularly elected officers of United States Fire Insurance Company at its principal office, in amounts or penalties: **Unlimited**

This Power of Attorney limits the act of those named therein to the bonds and undertakings specifically named therein, and they have no authority to bind United States Fire Insurance Company except in the manner and to the extent therein stated.

This Power of Attorney is granted pursuant to Article IV of the By-Laws of United States Fire Insurance Company as now in full force and effect, and consistent with Article III thereof, which Articles provide, in pertinent part:

> Article IV, Execution of Instruments - Except as the Board of Directors may authorize by resolution, the Chairman of the Board, President, any Vice-President, any Assistant Vice President, the Secretary, or any Assistant Secretary shall have power on behalf of the Corporation:
>
> (a) to execute, affix the corporate seal manually or by facsimile to, acknowledge, verify and deliver any contracts, obligations, instruments and documents whatsoever in connection with its business including, without limiting the foregoing, any bonds, guarantees, undertakings, recognizances, powers of attorney or revocations of any powers of attorney, stipulations, policies of insurance, deeds, leases, mortgages, releases, satisfactions and agency agreements;
> (b) to appoint, in writing, one or more persons for any or all of the purposes mentioned in the preceding paragraph (a), including affixing the seal of the Corporation.
>
> Article III, Officers, Section 3.11, Facsimile Signatures. The signature of any officer authorized by the Corporation to sign any bonds, guarantees, undertakings, recognizances, stipulations, powers of attorney or revocations of any powers of attorney and policies of insurance issued by the Corporation may be printed, facsimile, lithographed or otherwise produced. In addition, if and as authorized by the Board of Directors, dividend warrants or checks, or other numerous instruments similar to one another in form, may be signed by the facsimile signature or signatures, lithographed or otherwise produced, of such officer or officers of the Corporation as from time to time may be authorized to sign such instruments on behalf of the Corporation. The Corporation may continue to use for the purposes herein stated the facsimile signature of any person or persons who shall have been such officer or officers of the Corporation, notwithstanding the fact that he may have ceased to be such at the time when such instruments shall be issued.

IN WITNESS WHEREOF, United States Fire Insurance Company has caused these presents to be signed and attested by its appropriate officer and its corporate seal hereunto affixed this 8th day of April, 2025.

UNITED STATES FIRE INSURANCE COMPANY

Matthew E. Lubin, President

State of New Jersey }
County of Morris }

On this 8th day of April, 2025, before me, a Notary public of the State of New Jersey, came the above named officer of United States Fire Insurance Company, to me personally known to be the individual and officer described herein, and acknowledged that he executed the foregoing instrument and affixed the seal of United States Fire Insurance Company thereto by the authority of his office.

ETHAN SCHWARTZ
NOTARY PUBLIC
STATE OF NEW JERSEY
MY COMMISSION EXPIRES 6/25/2029
COMMISSION: #50223171

Ethan Schwartz (Notary Public)

I, the undersigned officer of United States Fire Insurance Company, a Delaware corporation, do hereby certify that the original Power of Attorney of which the foregoing is a full, true and correct copy is still in force and effect and has not been revoked.

IN WITNESS WHEREOF, I have hereunto set my hand and affixed the corporate seal of United States Fire Insurance Company on the 8th day of April 20 26

UNITED STATES FIRE INSURANCE COMPANY

Michael C. Fay, Senior Vice President

CONTACT INFORMATION: Bond Verifications: surety@cfins.com / Claims: SuretyClaimsSupport@cfins.com

ACORD™ CERTIFICATE OF LIABILITY INSURANCE

DATE (MM/DD/YYYY) 4/07/2026

THIS CERTIFICATE IS ISSUED AS A MATTER OF INFORMATION ONLY AND CONFERS NO RIGHTS UPON THE CERTIFICATE HOLDER. THIS CERTIFICATE DOES NOT AFFIRMATIVELY OR NEGATIVELY AMEND, EXTEND OR ALTER THE COVERAGE AFFORDED BY THE POLICIES BELOW. THIS CERTIFICATE OF INSURANCE DOES NOT CONSTITUTE A CONTRACT BETWEEN THE ISSUING INSURER(S), AUTHORIZED REPRESENTATIVE OR PRODUCER, AND THE CERTIFICATE HOLDER.

IMPORTANT: If the certificate holder is an ADDITIONAL INSURED, the policy(ies) must have ADDITIONAL INSURED provisions or be endorsed. If SUBROGATION IS WAIVED, subject to the terms and conditions of the policy, certain policies may require an endorsement. A statement on this certificate does not confer any rights to the certificate holder in lieu of such endorsement(s).

PRODUCER	CONTACT NAME: Yomie Gutierrez	
USI Insurance Services, LLC/CL 201 Alhambra Circle, Suite 900 Coral Gables, FL 33134-5108 305 669-6000	PHONE (A/C, No, Ext): 305 669-6000	FAX (A/C, No):
	E-MAIL ADDRESS: yomie.gutierrez@usi.com	
	INSURER(S) AFFORDING COVERAGE	NAIC #
	INSURER A : Ironshore Specialty Insurance Co	25445
INSURED Flotech Environmental, LLC 657 South Dr Ste #401 Miami Springs, FL 33166-5926	INSURER B : Hamilton Ins Designated Activity Co	1780
	INSURER C : Federal Insurance Company	20281
	INSURER D : Starr Surplus Lines Insurance Company	13604
	INSURER E :	
	INSURER F :	

COVERAGES **CERTIFICATE NUMBER:** **REVISION NUMBER:**

THIS IS TO CERTIFY THAT THE POLICIES OF INSURANCE LISTED BELOW HAVE BEEN ISSUED TO THE INSURED NAMED ABOVE FOR THE POLICY PERIOD INDICATED. NOTWITHSTANDING ANY REQUIREMENT, TERM OR CONDITION OF ANY CONTRACT OR OTHER DOCUMENT WITH RESPECT TO WHICH THIS CERTIFICATE MAY BE ISSUED OR MAY PERTAIN, THE INSURANCE AFFORDED BY THE POLICIES DESCRIBED HEREIN IS SUBJECT TO ALL THE TERMS, EXCLUSIONS AND CONDITIONS OF SUCH POLICIES. LIMITS SHOWN MAY HAVE BEEN REDUCED BY PAID CLAIMS.

INSR LTR	TYPE OF INSURANCE	ADDL INSR	SUBR WVD	POLICY NUMBER	POLICY EFF (MM/DD/YYYY)	POLICY EXP (MM/DD/YYYY)	LIMITS	
A	X COMMERCIAL GENERAL LIABILITY CLAIMS-MADE X OCCUR X BI/PD Ded:25000 GEN'L AGGREGATE LIMIT APPLIES PER: POLICY X PRO-JECT LOC OTHER:	X	X	IEPUW0031131601	09/08/2025	09/08/2026	EACH OCCURRENCE DAMAGE TO RENTED PREMISES (Ea occurrence) MED EXP (Any one person) PERSONAL & ADV INJURY GENERAL AGGREGATE PRODUCTS - COMP/OP AGG $	$2,000,000 $500,000 $25,000 $2,000,000 $4,000,000 $4,000,000 $
C	AUTOMOBILE LIABILITY X ANY AUTO OWNED AUTOS ONLY SCHEDULED AUTOS X HIRED AUTOS ONLY X NON-OWNED AUTOS ONLY	X	X	54326340	09/08/2025	09/08/2026	COMBINED SINGLE LIMIT (Ea accident) BODILY INJURY (Per person) BODILY INJURY (Per accident) PROPERTY DAMAGE (Per accident) $	$1,000,000 $ $ $ $
B	UMBRELLA LIAB X OCCUR X EXCESS LIAB CLAIMS-MADE DED RETENTION $	X	X	ENVXSS46373701	09/08/2025	09/08/2026	EACH OCCURRENCE AGGREGATE $	$4,000,000 $4,000,000 $
C	WORKERS COMPENSATION AND EMPLOYERS' LIABILITY ANY PROPRIETOR/PARTNER/EXECUTIVE OFFICER/MEMBER EXCLUDED? Y/N N (Mandatory in NH) If yes, describe under DESCRIPTION OF OPERATIONS below	N / A	X	54326341	09/08/2025	09/08/2026	X PER STATUTE OTH-ER E.L. EACH ACCIDENT E.L. DISEASE - EA EMPLOYEE E.L. DISEASE - POLICY LIMIT	 $1,000,000 $1,000,000 $1,000,000
D	CE-Inland Marine			ITC12762625	09/08/2025	09/08/2026	$300,000Per/ 300,000 Ag	
A	Pollution Liab	X		IEPUW0031131601	09/08/2025	09/08/2026	$2,000,000Each Occ	
A	Professional Liab			IEPUW0031131601	09/08/2025	09/08/2026	$2,000,000Each Inc	

DESCRIPTION OF OPERATIONS / LOCATIONS / VEHICLES (ACORD 101, Additional Remarks Schedule, may be attached if more space is required)

The General Liability, Automobile Liability and Excess Liability policies include an automatic Additional Insured endorsement that provides Additional Insured status to the City of St. Pete Beach, only when there is a written contract that requires such status, and only with regard to work performed by or on behalf of the named insured. The General Liability and Umbrella Liability policies contains a special endorsement with Primary wording, when required by written contract.

CERTIFICATE HOLDER

City of St. Pete Beach
155 Corey Ave
St. Petersburg Beach, FL 33706

CANCELLATION

SHOULD ANY OF THE ABOVE DESCRIBED POLICIES BE CANCELLED BEFORE THE EXPIRATION DATE THEREOF, NOTICE WILL BE DELIVERED IN ACCORDANCE WITH THE POLICY PROVISIONS.

AUTHORIZED REPRESENTATIVE

© 1988-2015 ACORD CORPORATION. All rights reserved.

CITY OF ST. PETE BEACH					
WASTEWATER SYSTEM REHABILITATION SERVICES					
ITEM	DESCRIPTION	QTY	UNIT	UNIT PRICE	AMOUNT
MANHOLE REHABILITATION					
1	Mobilization	1	EA		$ -
2	Flagmen (Per-Flagmen)	20	HR		$ -
3	Multi Lane, Lane Closures (FDOT Index No. 613)	10	EA/DY		$ -
4	Multi Lane, Intersection (FDOT Index No. 615)	10	EA/DY		$ -
5	Arrow Boards - 5' Minimum Horizontal Size	10	EA/DY		$ -
6	Variable Message Board	10	EA/DY		$ -
7	Concrete Barrier (FDOT Index No. 100)	10	EA/DY		$ -
8	Low Profile Barrier (FDOT Index No. 120)	10	EA/DY		$ -
9	Signs in Work Zones	10	EA/DY		$ -
10	6" Solid line Thermo Plastic - Permanent	200	LF		$ -
11	24" Stop Bar, Solid, Thermo Plastic, Perm.	200	LF		$ -
12	6" Skip line (6'-10' Skip) Thermo Plastic-Perm.	200	LF		$ -
13	Barricades Type III, with Warning Lights	1000	EA/DY		$ -
14	Barricades Type I or II, with Warning Lights	1000	EA/DY		$ -
15	Repair Manhole Bench and Channel	10	EA		$ -
16	Repair Chimney, Adjust/Replace MH Casting- Unpaved	10	EA		$ -
17	Repair Chimney, Adjust/Replace MH Casting- Asphalt Pavement	100	EA		$ -
18	Rebuild Corbel/Chimney for Type B Manhole Casting	10	EA		$ -
19	Furnish Manhole Casting - Type B	10	EA		$ -
20	Furnish Manhole Casting - Type E	30	EA		$ -
21	Severe Manhole Infiltration Elimination	10	EA		$ -
22	Chemical Sealing - Grout	50	GAL		$ -
23	Internal Chimney Sealant - Type B Manhole Casing	5	EA		$ -
24	Internal Chimney Sealant - Type E Manhole Casing	10	EA		$ -
25	Additional Access Cost for Manhole Coating	10	EA		$ -
26	Bypass Pumping Setup - 6-10" diameter	5	EA		$ -
27	Bypass Pumping Setup - 12" -14" diameter	20	EA		$ -
28	Bypass Pumping Setup - 15" to 21" diameter	10	EA		$ -
29	Bypass Pumping Setup - 24" diameter	5	EA		$ -
30	Bypass Pumping Operation - 6"-10" diameter	10	DAY		$ -
31	Bypass Pumping Operation - 12"-14" diameter	50	DAY		$ -
32	Bypass Pumping Operation - 15" to 21" diameter	25	DAY		$ -
33	Bypass Pumping Operation - 24" diameter	15	DAY		$ -
34	Pure Calcium Aluminate Cementitious MH Coating - 48" diameter, Initial	50	EA		$ -
35	Pure Calcium Aluminate Cementitious MH Coating - 60" diameter, Initial	10	EA		$ -
36	Pure Calcium Aluminate Cementitious MH Coating - 72" diameter, Initial	5	EA		$ -
37	Pure Calcium Aluminate Cementitious MH Coating - 48" diameter, Additional	250	VF		$ -
38	Pure Calcium Aluminate Cementitious MH Coating - 60" diameter, Additional	50	VF		$ -
39	Pure Calcium Aluminate Cementitious MH Coating - 72" diameter, Additional	25	VF		$ -
40	Reinforced Polymer MH Coating - 48" diameter, Initial	5	EA		$ -
41	Reinforced Polymer MH Coating - 60" diameter, Initial	5	EA		$ -
42	Reinforced Polymer MH Coating - 72" diameter, Initial	5	EA		$ -
43	Reinforced Polymer MH Coating - 48" diameter, Additional	25	VF		$ -
44	Reinforced Polymer MH Coating - 60" diameter, Additional	25	VF		$ -
45	Reinforced Polymer MH Coating - 72" diameter, Additional	25	VF		$ -
46	Concrete Curb Replacement - Type D	100	LF		$ -
47	Concrete Curb Replacement - Type F	100	LF		$ -
48	Concrete Curb Replacement - Miami Curb	100	LF		$ -
49	Concrete Sidewalk Replacement - 4" Thick	50	SY		$ -
50	Concrete Sidewalk Replacement - 6" Thick	50	SY		$ -
51	Concrete Driveway Replacement - 4" Thick	50	SY		$ -
52	Concrete Driveway Replacement - 6" Thick	50	SY		$ -
53	Inflow Dish	100	EA		$ -
	SUBTOTAL - MANHOLE REHABILITATION				$ -
PIPE LINING					

1	Mobilization	1	EA	$ 5,000.00	$ 5,000.00
2	Flagmen (Per-Flagmen)	20	HR	$ 150.00	$ 3,000.00
3	Multi Lane, Lane Closures (FDOT Index No. 613)	10	EA/DY	$ 750.00	$ 7,500.00
4	Multi Lane, Intersection (FDOT Index No. 615)	10	EA/DY	$ 1,200.00	$ 12,000.00
5	Arrow Boards - 5' Minimum Horizontal Size	10	EA/DY	$ 75.00	$ 750.00
6	Variable Message Board	10	EA/DY	$ 125.00	$ 1,250.00
7	Concrete Barrier (FDOT Index No. 100)	10	EA/DY	$ 50.00	$ 500.00
8	Low Profile Barrier (FDOT Index No. 120)	10	EA/DY	$ 40.00	$ 400.00
9	Signs in Work Zones	10	EA/DY	$ 1,000.00	$ 10,000.00
10	6" Solid line Thermo Plastic - Permanent	200	LF	$ 3.50	$ 700.00
11	24" Stop Bar, Solid, Thermo Plastic, Perm.	200	LF	$ 0.01	$ 2.00
12	6" Skip line (6'-10' Skip) Thermo Plastic-Perm.	200	LF	$ 3.00	$ 600.00
13	Barricades Type III, with Warning Lights	1000	EA/DY	$ 0.01	$ 10.00
14	Barricades Type I or II, with Warning Lights	1000	EA/DY	$ 0.01	$ 10.00
15	CIPP Main Liner 6" Diameter - 4.5 mm thickness	1100	LF	$ 60.00	$ 66,000.00
16	CIPP Main Liner 8" Diameter - 6.0 mm thickness	72200	LF	$ 34.00	$ 2,454,800.00
17	CIPP Main Liner 10" Diameter - 6.0 mm thickness	3600	LF	$ 53.00	$ 190,800.00
18	CIPP Main Liner 12" Diameter - 6.0 mm thickness	2400	LF	$ 72.00	$ 172,800.00
19	CIPP Main Liner 15" Diameter - 7.5 mm thickness	1500	LF	$ 98.00	$ 147,000.00
20	CIPP Main Liner 18" Diameter - 9.0 mm thickness	1800	LF	$ 119.00	$ 214,200.00
21	CIPP Main Liner 21" Diameter - 9.0 mm thickness	2900	LF	$ 154.00	$ 446,600.00
22	CIPP Main Liner 24" Diameter - 10.5 mm thickness	3800	LF	$ 174.00	$ 661,200.00
23	CIPP Main Liner 6" Diameter - Thickness Variance + 1.5mm	300	LF	$ 10.00	$ 3,000.00
24	CIPP Main Liner 8" Diameter - Thickness Variance + 1.5mm	5000	LF	$ 2.00	$ 10,000.00
25	CIPP Main Liner 10" Diameter - Thickness Variance + 1.5mm	1000	LF	$ 10.00	$ 10,000.00
26	CIPP Main Liner 12" Diameter - Thickness Variance + 1.5mm	1000	LF	$ 10.00	$ 10,000.00
27	CIPP Main Liner 15" Diameter - Thickness Variance + 1.5mm	300	LF	$ 10.00	$ 3,000.00
28	CIPP Main Liner 18" Diameter - Thickness Variance + 1.5mm	300	LF	$ 10.00	$ 3,000.00
29	CIPP Main Liner 21" Diameter - Thickness Variance + 1.5mm	300	LF	$ 20.00	$ 6,000.00
30	CIPP Main Liner 24" Diameter - Thickness Variance + 1.5mm	300	LF	$ 20.00	$ 6,000.00
31	Bypass Pumping Setup - 6-10" diameter	5	EA	$ 2,500.00	$ 12,500.00
32	Bypass Pumping Setup - 12" -14" diameter	45	EA	$ 0.01	$ 0.45
33	Bypass Pumping Setup - 15" to 21" diameter	20	EA	$ 0.01	$ 0.20
34	Bypass Pumping Setup - 24" diameter	5	EA	$ 10,000.00	$ 50,000.00
35	Bypass Pumping Operation - 6"-10" diameter	10	DAY	$ 0.01	$ 0.10
36	Bypass Pumping Operation - 12"-14" diameter	90	DAY	$ 0.01	$ 0.90
37	Bypass Pumping Operation - 15" to 21" diameter	40	DAY	$ 0.01	$ 0.40
38	Bypass Pumping Operation - 24" diameter	10	DAY	$ 0.01	$ 0.10
39	Normal Cleaning - 6" and 8" diameter	73300	LF	$ 5.50	$ 403,150.00
40	Normal Cleaning - 10" and 12" diameter	6000	LF	$ 5.25	$ 31,500.00
41	Normal Cleaning - 15" and 18" diameter	3300	LF	$ 5.50	$ 18,150.00
42	Normal Cleaning - 21" and 24" diameter	6700	LF	$ 7.00	$ 46,900.00
43	Specialty Cleaning - 6" and 8" diameter	1000	LF	$ 25.00	$ 25,000.00
44	Specialty Cleaning - 10" and 12" diameter	100	LF	$ 30.00	$ 3,000.00
45	Specialty Cleaning - 15" and 18" diameter	50	LF	$ 50.00	$ 2,500.00
46	Specialty Cleaning - 21" and 24" diameter	100	LF	$ 60.00	$ 6,000.00
47	Chemical Sealing of Host Pipe - 10" diameter and less	30	EA	$ 2,500.00	$ 75,000.00
48	Chemical Sealing of Host Pipe - 12" and 15" diameter	10	EA	$ 2,500.00	$ 25,000.00
49	Chemical Sealing of Host Pipe - 18" to 24" diameter	5	EA	$ 3,500.00	$ 17,500.00
50	Chemical Sealing - Grout	100	GAL	$ 150.00	$ 15,000.00
51	Removal & Sealing of Protruding Service Connections	25	EA	$ 500.00	$ 12,500.00
52	Additional Access Cost Main Liner	25	EA	$ 250.00	$ 6,250.00
53	Service Reconnection	200	EA	$ 1,400.00	$ 280,000.00
54	CIPP Liner Testing	5	EA	$ 1,500.00	$ 7,500.00
55	Lateral Grouting	10	EA	$ 1,000.00	$ 10,000.00
				SUBTOTAL - PIPE LINING	$ 5,493,574.15
POINT REPAIRS					
1	Mobilization for Routine Response	20	EA		$ -
2	Mobilization for Emergency Response	6	EA		$ -

3	Flagmen (Per-Flagmen)	20	HR		$	-
4	Multi Lane, Lane Closures (FDOT Index No. 613)	5	EA/DY		$	-
5	Multi Lane, Intersection (FDOT Index No. 615)	5	EA/DY		$	-
6	Arrow Boards - 5' Minimum Horizontal Size	10	EA/DY		$	-
7	Variable Message Board	10	EA/DY		$	-
8	Concrete Barrier (FDOT Index No. 415)	10	EA/DY		$	-
9	Low Profile Barrier (FDOT Index No. 412)	10	EA/DY		$	-
10	Signs in Work Zones	10	EA/DY		$	-
11	6" Solid line Thermo Plastic - Permanent	200	LF		$	-
12	24" Stop Bar, Solid, Thermo Plastic, Perm.	200	LF		$	-
13	6" Skip line (6'-10' Skip) Thermo Plastic-Perm.	200	LF		$	-
14	Barricades Type III, with Warning Lights	1000	EA/DY		$	-
15	Barricades Type I or II, with Warning Lights	1000	EA/DY		$	-
16	As-Built Survey	5	EA		$	-
17	Excavation, Unsuitable Material	100	CY		$	-
18	Sheeting & Bracing (Left in Place)	500	SF		$	-
19	Sheeting & Bracing, Pipe Trenches (Removed)	2500	SF		$	-
20	Well Point Dewatering Initial - 6'-8' Deep	10	EA		$	-
21	Well Point Dewatering Initial - 8'-10' Deep	10	EA		$	-
22	Well Point Dewatering Initial - 10'-12' Deep	5	EA		$	-
23	Well Point Dewatering Initial - 12'-14' Deep	5	EA		$	-
24	Well Point Dewatering Initial - 14'-16' Deep	3	EA		$	-
25	Well Point Dewatering Initial - > 16' Deep	3	EA		$	-
26	Well Point Dewatering Additional - 6'-8' Deep	200	EA		$	-
27	Well Point Dewatering Additional - 8'-10' Deep	200	EA		$	-
28	Well Point Dewatering Additional - 10'-12' Deep	100	EA		$	-
29	Well Point Dewatering Additional - 12'-14' Deep	100	EA		$	-
30	Well Point Dewatering Additional - 14'-16' Deep	50	EA		$	-
31	Well Point Dewatering Additional - > 16' Deep	50	EA		$	-
32	Jack & Bore 12" x .188" Steel Casing (6" GS)	40	LF		$	-
33	Jack & Bore 16" x .219" Steel Casing (8" GS)	40	LF		$	-
34	Jack & Bore 20" x .250" Steel Casing (10" GS)	40	LF		$	-
35	Jack & Bore 24" x .281" Steel Casing (12" GS)	40	LF		$	-
36	2" Directional Drill HDPE DR 9, IPS OD	200	LF		$	-
37	4" Directional Drill HDPE DR 11, DIPS OD	300	LF		$	-
38	6" Directional Drill HDPE DR 11, DIPS OD	500	LF		$	-
39	8" Directional Drill HDPE DR 11, DIPS OD	500	LF		$	-
40	10" Directional Drill HDPE DR 11, DIPS OD	500	LF		$	-
41	12" Directional Drill HDPE DR 11, DIPS OD	300	LF		$	-
42	6" PVC Pipe, C-900 DR 18 (Gravity Sewer) 0' - 6' Depth	100	LF		$	-
43	6" PVC Pipe, C-900 DR 18 (Gravity Sewer) 6' - 8' Depth	200	LF		$	-
44	6" PVC Pipe, C-900 DR 18 (Gravity Sewer) 8' - 10' Depth	100	LF		$	-
45	6" PVC Pipe, C-900 DR 18 (Gravity Sewer) 10' - 12' Depth	50	LF		$	-
46	6" PVC Pipe, C-900 DR 18 (Gravity Sewer) 12' - 14' Depth	50	LF		$	-
47	6" PVC Pipe, C-900 DR 18 (Gravity Sewer) 14' - 16' Depth	50	LF		$	-
48	6" PVC Pipe, C-900 DR 18 (Gravity Sewer) 16' - 18' Depth	50	LF		$	-
49	8" DI Pipe, CL 350 (Gravity Sewer) 0' - 6' Depth	50	LF		$	-
50	8" DI Pipe, CL 350 (Gravity Sewer) 6' - 8' Depth	100	LF		$	-
51	8" DI Pipe, CL 350 (Gravity Sewer) 8' - 10' Depth	100	LF		$	-
52	8" DI Pipe, CL 350 (Gravity Sewer) 10' - 12' Depth	50	LF		$	-
53	8" DI Pipe, CL 350 (Gravity Sewer) 12' - 14' Depth	50	LF		$	-
54	8" DI Pipe, CL 350 (Gravity Sewer) 14' - 16' Depth	50	LF		$	-
55	8" DI Pipe, CL 350 (Gravity Sewer) 16' - 18' Depth	50	LF		$	-
56	8" PVC Pipe, C-900 DR 18 (Gravity Sewer) 0' - 6' Depth	200	LF		$	-
57	8" PVC Pipe, C-900 DR 18 (Gravity Sewer) 6' - 8' Depth	400	LF		$	-
58	8" PVC Pipe, C-900 DR 18 (Gravity Sewer) 8' - 10' Depth	400	LF		$	-
59	8" PVC Pipe, C-900 DR 18 (Gravity Sewer) 10' - 12' Depth	400	LF		$	-
60	8" PVC Pipe, C-900 DR 18 (Gravity Sewer) 12' - 14' Depth	400	LF		$	-
61	8" PVC Pipe, C-900 DR 18 (Gravity Sewer) 14' - 16' Depth	200	LF		$	-

62	8" PVC Pipe, C-900 DR 18 (Gravity Sewer) 16' - 18' Depth	200	LF		$	-
63	10" DI Pipe, CL 350 (Gravity Sewer) 0' - 6' Depth	50	LF		$	-
64	10" DI Pipe, CL 350 (Gravity Sewer) 6' - 8' Depth	100	LF		$	-
65	10" DI Pipe, CL 350 (Gravity Sewer) 8' - 10' Depth	100	LF		$	-
66	10" DI Pipe, CL 350 (Gravity Sewer) 10' - 12' Depth	50	LF		$	-
67	10" DI Pipe, CL 350 (Gravity Sewer) 12' - 14' Depth	50	LF		$	-
68	10" DI Pipe, CL 350 (Gravity Sewer) 14' - 16' Depth	50	LF		$	-
69	10" DI Pipe, CL 350 (Gravity Sewer) 16' - 18' Depth	50	LF		$	-
70	10" PVC Pipe, C-900 DR 18 (Gravity Sewer) 0' -6' Depth	100	LF		$	-
71	10" PVC Pipe, C-900 DR 18 (Gravity Sewer) 6' - 8' Depth	400	LF		$	-
72	10" PVC Pipe, C-900 DR 18 (Gravity Sewer) 8' - 10' Depth	400	LF		$	-
73	10" PVC Pipe, C-900 DR 18 (Gravity Sewer) 10' - 12' Depth	400	LF		$	-
74	10" PVC Pipe, C-900 DR 18 (Gravity Sewer) 12' - 14' Depth	400	LF		$	-
75	10" PVC Pipe, C-900 DR 18 (Gravity Sewer) 14' - 16' Depth	200	LF		$	-
76	10" PVC Pipe, C-900 DR 18 (Gravity Sewer) 16' - 18' Depth	200	LF		$	-
77	12" DI Pipe, CL 350 (Gravity Sewer) 0' - 6' Depth	50	LF		$	-
78	12" DI Pipe, CL 350 (Gravity Sewer) 6' - 8' Depth	100	LF		$	-
79	12" DI Pipe, CL 350 (Gravity Sewer) 8' - 10' Depth	100	LF		$	-
80	12" DI Pipe, CL 350 (Gravity Sewer) 10' - 12' Depth	100	LF		$	-
81	12" DI Pipe, CL 350 (Gravity Sewer) 12' - 14' Depth	100	LF		$	-
82	12" DI Pipe, CL 350 (Gravity Sewer) 14' - 16' Depth	50	LF		$	-
83	12" DI Pipe, CL 350 (Gravity Sewer) 16' - 18' Depth	50	LF		$	-
84	12" PVC Pipe, C-900 DR 18 (Gravity Sewer) 0' ' 6' Depth	100	LF		$	-
85	12" PVC Pipe, C-900 DR 18 (Gravity Sewer) 6' - 8' Depth	200	LF		$	-
86	12" PVC Pipe, C-900 DR 18 (Gravity Sewer) 8' - 10' Depth	200	LF		$	-
87	12" PVC Pipe, C-900 DR 18 (Gravity Sewer) 10' - 12' Depth	100	LF		$	-
88	12" PVC Pipe, C-900 DR 18 (Gravity Sewer) 12' - 14' Depth	100	LF		$	-
89	12" PVC Pipe, C-900 DR 18 (Gravity Sewer) 14' - 16' Depth	50	LF		$	-
90	12" PVC Pipe, C-900 DR 18 (Gravity Sewer) 16' - 18' Depth	50	LF		$	-
91	16" DI Pipe, CL 350 (Gravity Sewer) 0' - 6' Depth	200	LF		$	-
92	16" DI Pipe, CL 350 (Gravity Sewer) 6' - 8' Depth	400	LF		$	-
93	16" DI Pipe, CL 350 (Gravity Sewer) 8' - 10' Depth	400	LF		$	-
94	16" DI Pipe, CL 350 (Gravity Sewer) 10' - 12' Depth	200	LF		$	-
95	16" DI Pipe, CL 350 (Gravity Sewer) 12' - 14' Depth	200	LF		$	-
96	16" DI Pipe, CL 350 (Gravity Sewer) 14' - 16' Depth	100	LF		$	-
97	16" DI Pipe, CL 350 (Gravity Sewer) 16' - 18' Depth	100	LF		$	-
98	16" PVC Pipe, C-905 DR 18 (Gravity Sewer) 0' - 6' Depth	100	LF		$	-
99	16" PVC Pipe, C-905 DR 18 (Gravity Sewer) 6' - 8' Depth	200	LF		$	-
100	16" PVC Pipe, C-905 DR 18 (Gravity Sewer) 8' - 10' Depth	200	LF		$	-
101	16" PVC Pipe, C-905 DR 18 (Gravity Sewer) 10' - 12' Depth	100	LF		$	-
102	16" PVC Pipe, C-905 DR 18 (Gravity Sewer) 12' - 14' Depth	100	LF		$	-
103	16" PVC Pipe, C-905 DR 18 (Gravity Sewer) 14' - 16' Depth	50	LF		$	-
104	16" PVC Pipe, C-905 DR 18 (Gravity Sewer) 16' - 18' Depth	50	LF		$	-
105	18" DI Pipe, CL 350 (Gravity Sewer) 0' - 6' Depth	200	LF		$	-
106	18" DI Pipe, CL 350 (Gravity Sewer) 6' - 8' Depth	400	LF		$	-
107	18" DI Pipe, CL 350 (Gravity Sewer) 8' - 10' Depth	400	LF		$	-
108	18" DI Pipe, CL 350 (Gravity Sewer) 10' - 12' Depth	200	LF		$	-
109	18" DI Pipe, CL 350 (Gravity Sewer) 12' - 14' Depth	200	LF		$	-
110	18" DI Pipe, CL 350 (Gravity Sewer) 14' - 16' Depth	100	LF		$	-
111	18" DI Pipe, CL 350 (Gravity Sewer) 16' - 18' Depth	100	LF		$	-
112	18" PVC Pipe, C-905 DR 21 (Gravity Sewer) 0' - 6' Depth	100	LF		$	-
113	18" PVC Pipe, C-905 DR 21 (Gravity Sewer) 6' - 8' Depth	200	LF		$	-
114	18" PVC Pipe, C-905 DR 21 (Gravity Sewer) 8' - 10' Depth	200	LF		$	-
115	18" PVC Pipe, C-905 DR 21 (Gravity Sewer) 10' - 12' Depth	100	LF		$	-
116	18 PVC Pipe, C-905 DR 21 (Gravity Sewer) 12' - 14' Depth	100	LF		$	-
117	18" PVC Pipe, C-905 DR 21 (Gravity Sewer) 14' - 16' Depth	50	LF		$	-
118	18" PVC Pipe, C-905 DR 21 (Gravity Sewer) 16' - 18' Depth	50	LF		$	-
119	21" DI Pipe, CL 350 (Gravity Sewer) 0' - 6' Depth	200	LF		$	-
120	21" DI Pipe, CL 350 (Gravity Sewer) 6' - 8' Depth	400	LF		$	-

121	21" DI Pipe, CL 350 (Gravity Sewer) 8' - 10' Depth	400	LF		$ -
122	21" DI Pipe, CL 350 (Gravity Sewer) 10' - 12' Depth	200	LF		$ -
123	21" DI Pipe, CL 350 (Gravity Sewer) 12' - 14' Depth	200	LF		$ -
124	21" DI Pipe, CL 350 (Gravity Sewer) 14' - 16' Depth	100	LF		$ -
125	21" DI Pipe, CL 350 (Gravity Sewer) 16' - 18' Depth	100	LF		$ -
126	21" PVC Pipe, C-905 DR 21 (Gravity Sewer) 0' - 6' Depth	100	LF		$ -
127	21" PVC Pipe, C-905 DR 21 (Gravity Sewer) 6' - 8' Depth	200	LF		$ -
128	21" PVC Pipe, C-905 DR 21 (Gravity Sewer) 8' - 10' Depth	200	LF		$ -
129	21" PVC Pipe, C-905 DR 21 (Gravity Sewer) 10' - 12' Depth	100	LF		$ -
130	21" PVC Pipe, C-905 DR 21 (Gravity Sewer) 12' - 14' Depth	100	LF		$ -
131	21" PVC Pipe, C-905 DR 21 (Gravity Sewer) 14' - 16' Depth	50	LF		$ -
132	21" PVC Pipe, C-905 DR 21 (Gravity Sewer) 16' - 18' Depth	50	LF		$ -
133	24" DI Pipe, CL 350 (Gravity Sewer) 0' - 6' Depth	200	LF		$ -
134	24" DI Pipe, CL 350 (Gravity Sewer) 6' - 8' Depth	400	LF		$ -
135	24" DI Pipe, CL 350 (Gravity Sewer) 8' - 10' Depth	400	LF		$ -
136	24" DI Pipe, CL 350 (Gravity Sewer) 10' - 12' Depth	200	LF		$ -
137	24" DI Pipe, CL 350 (Gravity Sewer) 12' - 14' Depth	200	LF		$ -
138	24" DI Pipe, CL 350 (Gravity Sewer) 14' - 16' Depth	100	LF		$ -
139	24" DI Pipe, CL 350 (Gravity Sewer) 16' - 18' Depth	100	LF		$ -
140	24" PVC Pipe, C-905 DR 21 (Gravity Sewer) 0' - 6' Depth	100	LF		$ -
141	24" PVC Pipe, C-905 DR 21 (Gravity Sewer) 6' - 8' Depth	200	LF		$ -
142	24" PVC Pipe, C-905 DR 21 (Gravity Sewer) 8' - 10' Depth	200	LF		$ -
143	24" PVC Pipe, C-905 DR 21 (Gravity Sewer) 10' - 12' Depth	100	LF		$ -
144	24" PVC Pipe, C-905 DR 21 (Gravity Sewer) 12' - 14' Depth	100	LF		$ -
145	24" PVC Pipe, C-905 DR 21 (Gravity Sewer) 14' - 16' Depth	50	LF		$ -
146	24" PVC Pipe, C-905 DR 21 (Gravity Sewer) 16' - 18' Depth	50	LF		$ -
147	Install PVC Cleanout	10	EA		$ -
148	Replace PVC Cleanout with Manhole Structure	10	EA		$ -
149	Remove Pipe 2" or 4" (Gravity Sewer)	200	LF		$ -
150	Remove Pipe 6" or 8" (Gravity Sewer)	400	LF		$ -
151	Remove Pipe 10" or 12" (Gravity Sewer)	400	LF		$ -
152	Remove Pipe 15", 16" or 18" (Gravity Sewer)	200	LF		$ -
153	Remove Pipe 21" or 24" (Gravity Sewer)	200	LF		$ -
154	4" Pipe - Install or Adjust Service Lateral 0'-6' Deep	3	EA		$ -
155	4" Pipe - Install or Adjust Service Lateral 6'-8' Deep	3	EA		$ -
156	4" Pipe - Install or Adjust Service Lateral 8'-10' Deep	3	EA		$ -
157	4" Pipe - Install or Adjust Service Lateral 10'-12'Deep	3	EA		$ -
158	4" Pipe - Install or Adjust Service Lateral 12'-14'Deep	2	EA		$ -
159	4" Pipe - Install or Adjust Service Lateral 14'-16'Deep	2	EA		$ -
160	4" Pipe - Install or Adjust Service Lateral 16'-18' Deep	2	EA		$ -
161	6" Pipe - Install or Adjust Service Lateral 0'-6' Deep	3	EA		$ -
162	6" Pipe - Install or Adjust Service Lateral 6'-8' Deep	3	EA		$ -
163	6" Pipe - Install or Adjust Service Lateral 8'-10' Deep	3	EA		$ -
164	6" Pipe - Install or Adjust Service Lateral 10'-12' Deep	3	EA		$ -
165	6" Pipe - Install or Adjust Service Lateral 12'-14' Deep	2	EA		$ -
166	6" Pipe - Install or Adjust Service Lateral 14'-16' Deep	2	EA		$ -
167	6" Pipe - Install or Adjust Service Lateral 16'-18' Deep	2	EA		$ -
168	2" Sewer Line Manhole Connection	3	EA		$ -
169	4" Sewer Line Manhole Connection	3	EA		$ -
170	6" Sewer Line Manhole Connection	5	EA		$ -
171	8" Sewer Line Manhole Connection	5	EA		$ -
172	10" Sewer Line Manhole Connection	3	EA		$ -
173	12" Sewer Line Manhole Connection	3	EA		$ -
174	16" Sewer Line Manhole Connection	3	EA		$ -
175	18" Sewer Line Manhole Connection	2	EA		$ -
176	21” Sewer Line Manhole Connection	2	EA		$ -
177	24” Sewer Line Manhole Connection	2	EA		$ -
178	2" Inside Drop Connection	3	EA		$ -
179	4" Inside Drop Connection	3	EA		$ -

180	6" Inside Drop Connection	3	EA		$ -
181	8" Inside Drop Connection	5	EA		$ -
182	10" Inside Drop Connection	3	EA		$ -
183	12" Inside Drop Connection	3	EA		$ -
184	15"/16" Inside Drop Connection	3	EA		$ -
185	18" Inside Drop Connection	2	EA		$ -
186	21" Inside Drop Connection	3	EA		$ -
187	24" Inside Drop Connection	2	EA		$ -
188	Grouting Out of Service Pipe (Force Main)	30	CY		$ -
189	Disconnect & Plug 2" or 4" Pipe	5	EA		$ -
190	Disconnect & Plug 6" or 8" Pipe	5	EA		$ -
191	Disconnect & Plug 10" or 12" Pipe	5	EA		$ -
192	2" PVC Restrained Joint Pipe & Fittings FM, SDR 21	200	LF		$ -
193	4" PVC Pipe, C-900 DR 18 (Force Main)	500	LF		$ -
194	4" PVC Restrained Joint Pipe & Fittings FM, C-900 DR 18	100	LF		$ -
195	6" PVC Pipe, C-900 DR 18 (Force Main)	500	LF		$ -
196	6" PVC Restrained Joint Pipe & Fittings FM, C-900 DR 18	100	LF		$ -
197	8" PVC Pipe, C-900 DR 18 (Force Main)	500	LF		$ -
198	8" PVC Restrained Joint Pipe & Fittings FM, C-900 DR 18	100	LF		$ -
199	10" PVC Pipe, C-900 DR 18 (Force Main)	500	LF		$ -
200	10" PVC Restrained Joint Pipe & Fittings FM, C-900 DR 18	100	LF		$ -
201	12" PVC Pipe, C-900 DR 18 (Force Main)	300	LF		$ -
202	12" PVC Restrained Joint Pipe & Fittings FM, C-900 DR 18	100	LF		$ -
203	2" Restrained Joints	20	EA		$ -
204	4" Restrained Joints	20	EA		$ -
205	6" Restrained Joints	20	EA		$ -
206	8" Restrained Joints	20	EA		$ -
207	10" Restrained Joints	20	EA		$ -
208	12" Restrained Joints	20	EA		$ -
209	2"-4" Forcemain Pipe and Appurtenances - Over Depth Excavation	400	LF		$ -
210	6"-8" Forcemain Pipe and Appurtenances - Over Depth Excavation	500	LF		$ -
211	10"-12" Forcemain Pipe and Appurtenances - Over Depth Excavation	200	LF		$ -
212	Remove Out of Service Pipe 2" or 4" (Force Main)	500	LF		$ -
213	Remove Out of Service Pipe 6" or 8" (Force Main)	1000	LF		$ -
214	Remove Out of Service Pipe 10" or 12" (Force Main)	500	LF		$ -
215	2" Sleeved Connection	6	EA		$ -
216	4" Sleeved Connection	6	EA		$ -
217	6" Sleeved Connection	10	EA		$ -
218	8" Sleeved Connection	10	EA		$ -
219	10" Sleeved Connection	4	EA		$ -
220	12" Sleeved Connection	4	EA		$ -
221	Reverse Deadman for 2" or 4" Pipe	3	EA		$ -
222	Reverse Deadman for 6" or 8" Pipe	5	EA		$ -
223	Reverse Deadman for 10" or 12" Pipe	3	EA		$ -
224	DI Fittings FM C 153 (Compact Body)	2	TN		$ -
225	2" Air Release Assembly (In-line)	2	EA		$ -
226	2" Air Release Assembly (Offset)	2	EA		$ -
227	2" RWGV (Resilient Wedge Gate Valve) & Box	4	EA		$ -
228	4" RWGV & Box C 515	4	EA		$ -
229	6" RWGV & Box C 515	10	EA		$ -
230	8" RWGV & Box C 515	5	EA		$ -
231	10" RWGV & Box C 515	2	EA		$ -
232	12" RWGV & Box C 515	2	EA		$ -
233	Adjust Valve Box to Finished Grade (In Pavement)	5	EA		$ -
234	Adjust Valve Box to Finished Grade (Outside of Pavement)	5	EA		$ -
235	4" Line Stop	1	EA		$ -
236	6" Line Stop	1	EA		$ -
237	8" Line Stop	1	EA		$ -
238	10" Line Stop	1	EA		$ -

239	12" Line Stop	1	EA		$	-
240	4" x 2" Tapping Saddle Valve & Box	2	EA		$	-
241	4" x 4" Tapping Sleeve Valve & Box	2	EA		$	-
242	6" x 2" Tapping Saddle Valve & Box	2	EA		$	-
243	6" x 4" Tapping Sleeve Valve & Box	2	EA		$	-
244	6" x 6" Tapping Sleeve Valve & Box	2	EA		$	-
245	8" x 2" Tapping Saddle Valve & Box	2	EA		$	-
246	8" x 4" Tapping Sleeve Valve & Box	2	EA		$	-
247	8" x 6" Tapping Sleeve Valve & Box	2	EA		$	-
248	8" x 8" Tapping Sleeve Valve & Box	2	EA		$	-
249	10" x 2" Tapping Saddle Valve & Box	2	EA		$	-
250	10" x 4" Tapping Sleeve Valve & Box	2	EA		$	-
251	10" x 6" Tapping Sleeve Valve & Box	2	EA		$	-
252	10" x 8" Tapping Sleeve Valve & Box	2	EA		$	-
253	10" x 10" Tapping Sleeve Valve & Box	2	EA		$	-
254	12" x 2" Tapping Saddle Valve & Box	2	EA		$	-
255	12" x 4" Tapping Sleeve Valve & Box	2	EA		$	-
256	12" x 6" Tapping Sleeve Valve & Box	2	EA		$	-
257	12" x 8" Tapping Sleeve Valve & Box	2	EA		$	-
258	12" x 10" Tapping Sleeve Valve & Box	2	EA		$	-
259	12" x 12" Tapping Sleeve Valve & Box	2	EA		$	-
260	4' Dia. - Precast Manhole Standard	30	VF		$	-
261	4' Dia. - Precast Manhole Inside Drop	10	VF		$	-
262	4' Dia. - Precast Manhole Outside Drop	10	VF		$	-
263	5' Dia. - Precast Manhole Standard	30	VF		$	-
264	5' Dia. - Precast Manhole Inside Drop	10	VF		$	-
265	5' Dia. - Precast Manhole Outside Drop	10	VF		$	-
266	5' Dia. - Precast Air Release Manhole	10	VF		$	-
267	6' Dia. - Precast Manhole Standard	30	VF		$	-
268	6' Dia. - Precast Manhole Inside Drop	10	VF		$	-
269	6' Dia. - Precast Manhole Outside Drop	10	VF		$	-
270	Removal of Existing Manhole	3	EA		$	-
271	Remove Existing Manhole Additional	30	VF		$	-
272	Initial Excavation - 0'-6' Deep	5	EA		$	-
273	Initial Excavation - 6'-8' Deep	6	EA		$	-
274	Initial Excavation - 8'-10' Deep	6	EA		$	-
275	Initial Excavation - 10'-12' Deep	6	EA		$	-
276	Initial Excavation - 12'-14' Deep	3	EA		$	-
277	Initial Excavation - 14'-16' Deep	3	EA		$	-
278	Initial Excavation - 16'-18' Deep	2	EA		$	-
279	Initial Excavation - 18'-20' Deep	2	EA		$	-
280	Additional Excavation - 0'-6' Deep	100	LF		$	-
281	Additional Excavation - 6'-8' Deep	100	LF		$	-
282	Additional Excavation - 8'-10' Deep	100	LF		$	-
283	Additional Excavation - 10'-12' Deep	100	LF		$	-
284	Additional Excavation - 12'-14' Deep	100	LF		$	-
285	Additional Excavation - 14'-16' Deep	100	LF		$	-
286	Additional Excavation - 16'-18' Deep	50	LF		$	-
287	Additional Excavation - 18'-20' Deep	50	LF		$	-
288	Wastewater Bypass Pumping, Set up, 6" - 10" diameter	5	EA		$	-
289	Wastewater Bypass Pumping, Set up, 12" - 14" diameter	2	EA		$	-
290	Wastewater Bypass Pumping, Set up, 15" - 21" diameter	2	EA		$	-
291	Wastewater Bypass Pumping, Set up, 24" diameter	2	EA		$	-
292	Wastewater Bypass Pumping, Operation, 6" - 10" diameter	10	DAY		$	-
293	Wastewater Bypass Pumping, Operation, 12" - 14" diameter	5	DAY		$	-
294	Wastewater Bypass Pumping, Operation, 15" - 21" diameter	5	DAY		$	-
295	Wastewater Bypass Pumping, Operation, 24" diameter	2	DAY		$	-
296	6" Dia. Pipe Gravity Sewer Point Repair (DI Replacement Pipe)	2	EA		$	-
297	6" Dia. Pipe Gravity Sewer Point Repair (PVC Replacement Pipe)	5	EA		$	-

298	8" Dia. Pipe Gravity Sewer Point Repair (DI Replacement Pipe)	2	EA		$ -
299	8" Dia. Pipe Gravity Sewer Point Repair (PVC Replacement Pipe)	5	EA		$ -
300	10" Dia. Pipe Gravity Sewer Point Repair (DI Replacement Pipe)	2	EA		$ -
301	10" Dia. Pipe Gravity Sewer Point Repair (PVC Replacement Pipe)	5	EA		$ -
302	12" Dia. Pipe Gravity Sewer Point Repair (DI Replacement Pipe)	2	EA		$ -
303	12" Dia. Pipe Gravity Sewer Point Repair (PVC Replacement Pipe)	5	EA		$ -
304	15"/16" Dia. Pipe Gravity Sewer Point Repair (DI Replacement Pipe)	2	EA		$ -
305	15"/16" Dia. Pipe Gravity Sewer Point Repair (PVC Rplacement Pipe)	2	EA		$ -
306	18" Dia. Pipe Gravity Sewer Point Repair (DI Replacement Pipe)	2	EA		$ -
307	18" Dia. Pipe Gravity Sewer Point Repair (PVC Replacement Pipe)	2	EA		$ -
308	21" Dia. Pipe Gravity Sewer Point Repair (DI Replacement Pipe)	2	EA		$ -
309	21" Dia. Pipe Gravity Sewer Point Repair(PVC Replacement Pipe)	2	EA		$ -
310	24" Dia. Pipe Gravity Sewer Point Repair (DI Replacement Pipe)	2	EA		$ -
311	24" Dia. Pipe Gravity Sewer Point Repair (PVC Replacement Pipe)	2	EA		$ -
312	6" Dia. Pipe Gravity Sewer Point Repair - Additional Length (DI Replacement Pipe)	20	LF		$ -
313	6" Dia. Pipe Gravity Sewer Point Repair - Additional Length (PVC Replacement Pipe)	50	LF		$ -
314	8" Dia. Pipe Gravity Sewer Point Repair - Additional Length (DI Replacement Pipe)	20	LF		$ -
315	8" Dia. Pipe Gravity Sewer Point Repair - Additional Length (PVC Replacement Pipe)	100	LF		$ -
316	10" Dia. Pipe Gravity Sewer Point Repair - Additional Length (DI Replacement Pipe)	20	LF		$ -
317	10" Dia. Pipe Gravity Sewer Point Repair - Additional Length (PVC Replacement Pipe)	100	LF		$ -
318	12" Dia. Pipe Gravity Sewer Point Repair Additional Length (DI Replacement Pipe)	50	LF		$ -
319	12" Dia. Pipe Gravity Sewer Point Repair - Additional Length (PVC Replacement Pipe)	20	LF		$ -
320	15"/16" Dia. Pipe Gravity Sewer Point Repair - Additional Length (DI Replacement Pipe)	20	LF		$ -
321	15"/16" Dia. Pipe Gravity Sewer Point Repair - Additional Length (PVC Replacement Pipe)	50	LF		$ -
322	18" Dia. Pipe Gravity Sewer Point Repair - Additional Length (DI Replacement Pipe)	20	LF		$ -
323	18" Dia. Pipe Gravity Sewer Point Repair - Additional Length (PVC Replacement Pipe)	50	LF		$ -
324	21" Dia. Pipe Gravity Sewer Point Repair - Additional Length (DI Replacement Pipe)	20	LF		$ -
325	21" Dia. Pipe Gravity Sewer Point Repair - Additional Length (PVC Replacement Pipe)	50	LF		$ -
326	24" Dia. Pipe Gravity Sewer Point Repair - Additional Length (DI Replacement Pipe)	20	LF		$ -
327	24" Dia. Pipe Gravity Sewer Point Repair - Additional Length (PVC Replacement Pipe)	50	LF		$ -
328	2" Dia. Pipe Forcemain Point Repair	3	EA		$ -
329	4" Dia. Pipe Forcemain Point Repair	3	EA		$ -
330	6" Dia. Pipe Forcemain Point Repair	3	EA		$ -
331	8" Dia. Pipe Forcemain Point Repair	3	EA		$ -
332	10" Dia. Pipe Forcemain Point Repair	2	EA		$ -
333	12" Dia. Pipe Forcemain Point Repair	2	EA		$ -
334	Replace Manhole Ring & Cover (Asphalt Pavement)	5	EA		$ -
335	Replace Manhole Ring & Cover (Unpaved)	5	EA		$ -
336	Manhole Bench Replacement, 4' Diameter	2	EA		$ -
337	Manhole Bench Replacement, 5' Diameter	2	EA		$ -
338	Manhole Bench Replacement, 6' Diameter	2	EA		$ -
339	Adjust Manhole Ring & Cover to Finished Grade (In Pavement)	5	EA		$ -
340	Adjust Manhole Ring & Cover to Finished Grade (Outside of Pavement)	5	EA		$ -
341	Flowable Concrete Fill	100	CY		$ -
342	Roadway Base, Lime Rock, Primed, Min. LBR 100, Variable Thickness	120	CY		$ -
343	Roadway Base, Crushed Concrete/Graded Aggregate, Min. LBR 100, Variable Thickness	120	CY		$ -
344	Superpave Asphalt Base, Type B 12.5, Variable Thickness	50	TN		$ -
345	Superpave Asphalt Concrete, Type SP 9.5, Fine, Traffic Level C, Variable Thickness	100	TN		$ -
346	Superpave Asphalt Concrete, Type SP 12.5, Fine, Traffic Level C, Variable Thickness	100	TN		$ -
347	Pavement, Cement Concrete, 6" Min Thickness (Driveways)	100	SY		$ -
348	Pavement, Cement Concrete, 8" Thick	100	SY		$ -
349	Driveway Restoration, In Kind, Decorative Block	50	SY		$ -
350	Milling Existing Asphalt Pavement, 1/2" Average Depth	150	SY		$ -
351	Milling Existing Asphalt Pavement, 3/4" Average Depth	150	SY		$ -
352	Milling Existing Asphalt Pavement, 1" Average Depth	150	SY		$ -
353	Curb & Gutter, Concrete, FDOT Type D	100	LF		$ -
354	Curb & Gutter Concrete, FDOT Type F	100	LF		$ -
355	Curb & Gutter, Concrete, Miami Curb	300	LF		$ -
356	Valley Gutter, Concrete, PCED Index 1315	100	LF		$ -

357	Sidewalk, Concrete, 4" Min. Thickness, Remove and Replace	500	SF		$	-
358	Sidewalk, Concrete, 6" Min. Thickness, Remove and Replace	500	SF		$	-
359	Sodding	4500	SF		$	-
360	Sectional Liner, 6" - 24" Pipe	50	EA		$	-
				SUBTOTAL - POINT REPAIRS	$	-
				GRAND TOTAL	$	5,493,574.15

Bid quantities are for comparison purposes only.
This contract consists of various projects which are not yet defined and no quantities are guaranteed.

EXHIBIT "D"

Conditional Federal/Grant-Funded Contract Addendum

(Place Conditional Federal/Grant-Funded Contract Addendum behind this page)

EXHIBIT "D"
CONDITIONAL FEDERAL/GRANT-FUNDED CONTRACT ADDENDUM

1. Applicability

1.1 This Exhibit applies only if activated under Section 25 of the Agreement or under a Task Order. If not activated, this Exhibit is reserved and has no operative effect.
1.2 If activated, this Exhibit supplements the Agreement and applies to the federally funded or grant-funded Work only. Contractor shall comply with all applicable requirements of the federal award, grant agreement, pass-through entity, program rules, and applicable law.
1.3 The City may provide additional award-specific clauses, certifications, forms, wage determinations, reporting requirements, or flow-down provisions. Contractor shall comply with such requirements as a condition of performing the affected Work and receiving payment from the applicable funding source.

2. Federal Award and Grant Information

Federal/Grant Program: [insert]
Federal Awarding Agency: [insert]
Pass-Through Entity: [insert, if applicable]
Assistance Listing Number: [insert, if applicable]
Federal Award Identification Number: [insert, if applicable]
Award or Disaster Declaration Date: [insert, if applicable]
Project Number: [insert]
Special Award Conditions: [insert or attach]

3. Remedies for Breach

For contracts exceeding the simplified acquisition threshold, Contractor acknowledges that the City may exercise all administrative, contractual, legal, and equitable remedies available under the Contract Documents and applicable law if Contractor violates or breaches contract terms. Remedies may include withholding payment, requiring correction, suspension of Work, termination, procurement from alternate sources, damages, sanctions, and any other appropriate remedy.

4. Termination for Cause and Convenience

For contracts in excess of $10,000, the City may terminate the federally funded or grant-funded Work for cause or convenience as provided in the Agreement. The notice of termination will identify the effective date and the manner of termination. Contractor shall be paid only for authorized Work satisfactorily performed before the effective date of termination, subject to documentation, offsets, allowable cost requirements, and applicable grant rules.

5. Equal Employment Opportunity

Except as otherwise provided under 41 C.F.R. Part 60, if the Work is a federally assisted construction contract as defined in 41 C.F.R. § 60-1.3, Contractor shall comply with the equal opportunity clause in 41 C.F.R. § 60-1.4(b), which is incorporated by reference as if fully set forth

RESERVED

herein, and shall include the required clause in covered subcontracts and purchase orders.

6. Davis-Bacon Act and Copeland Anti-Kickback Act

When required by federal program legislation, all prime construction contracts in excess of $2,000 must include compliance with the Davis-Bacon Act, 40 U.S.C. §§ 3141-3148, as supplemented by Department of Labor regulations at 29 C.F.R. Part 5. If Davis-Bacon applies, Contractor shall pay laborers and mechanics at rates not less than the applicable wage determination, pay wages not less than once per week, submit certified payrolls if required, and comply with all applicable labor standards.
If Davis-Bacon applies, Contractor shall also comply with the Copeland "Anti-Kickback" Act, 40 U.S.C. § 3145, as supplemented by 29 C.F.R. Part 3, and shall not induce any person employed in the construction, completion, or repair of public work to give up any part of compensation to which the person is entitled. Contractor shall report suspected or reported violations to the City.

7. Contract Work Hours and Safety Standards Act

Where applicable, for contracts in excess of $100,000 that involve the employment of mechanics or laborers, Contractor shall comply with 40 U.S.C. §§ 3702 and 3704, as supplemented by Department of Labor regulations at 29 C.F.R. Part 5. Contractor shall compute wages based on a standard 40-hour workweek and shall compensate covered workers at not less than one and one-half times the basic rate of pay for hours worked in excess of 40 hours in a workweek. No laborer or mechanic shall be required to work under unsanitary, hazardous, or dangerous conditions. These requirements do not apply to purchases of supplies, materials, or articles ordinarily available on the open market, or to contracts for transportation or transmission of intelligence.

8. Rights to Inventions

If the federal award meets the definition of "funding agreement" under 37 C.F.R. § 401.2(a), and the Work involves substitution of parties, assignment, or performance of experimental, developmental, or research work under that funding agreement, Contractor shall comply with 37 C.F.R. Part 401 and any implementing regulations issued by the awarding agency.

9. Clean Air Act and Federal Water Pollution Control Act

For contracts and subgrants exceeding $150,000, Contractor shall comply with all applicable standards, orders, and regulations issued pursuant to the Clean Air Act, 42 U.S.C. §§ 7401-7671q, and the Federal Water Pollution Control Act, 33 U.S.C. §§ 1251-1387. Contractor shall report each violation to the City, and the City will report violations as required to the federal awarding agency and the appropriate EPA regional office. Contractor shall include these requirements in each covered subcontract exceeding $150,000.

10. Debarment and Suspension

Contractor shall comply with Executive Orders 12549 and 12689 and 2 C.F.R. Part 180. Contractor shall not enter into covered transactions with parties listed on the governmentwide exclusions in the System for Award Management. Contractor shall verify that Contractor, its principals, and its affiliates are not excluded or disqualified and shall include this requirement in lower-tier covered

RESERVED

transactions.

11. Byrd Anti-Lobbying Amendment

For awards exceeding $100,000, Contractor shall comply with the Byrd Anti-Lobbying Amendment, 31 U.S.C. § 1352. Contractor shall certify that it has not and will not use federal appropriated funds to pay any person or organization for influencing or attempting to influence an officer or employee of an agency, a member of Congress, an officer or employee of Congress, or an employee of a member of Congress in connection with obtaining a federal contract, grant, or other covered award. Contractor shall disclose lobbying with non-federal funds as required and shall require each lower tier to make the same certification and disclosure.

12. Procurement of Recovered Materials

Contractor shall comply with 2 C.F.R. § 200.323 and Section 6002 of the Solid Waste Disposal Act, as amended by the Resource Conservation and Recovery Act, to the extent applicable. Contractor shall procure designated items containing the highest percentage of recovered materials practicable, consistent with competition and performance requirements, when the purchase price exceeds the applicable threshold or the value of the quantity acquired during the preceding fiscal year exceeded the applicable threshold. Contractor shall also procure solid waste management services in a manner that maximizes energy and resource recovery and shall support the City's affirmative procurement program where applicable.

13. Domestic Preferences for Procurements

As appropriate and to the extent consistent with law, Contractor shall comply with 2 C.F.R. § 200.322 by providing a preference for the purchase, acquisition, or use of goods, products, or materials produced in the United States, including iron, aluminum, steel, cement, and other manufactured products, when the Work is performed under a federal award.

14. Prohibition on Certain Telecommunications and Video Surveillance Equipment or Services

Contractor shall comply with 2 C.F.R. § 200.216 and shall not obligate or expend federal funds to procure, obtain, extend, renew, or enter into a contract to procure or obtain covered telecommunications equipment or services as a substantial or essential component of any system or as critical technology as part of any system. Contractor shall include this prohibition in applicable subcontracts and purchase orders.

15. Build America, Buy America

If the Work is an infrastructure project funded by a federal financial assistance program subject to the Build America, Buy America Act, Contractor shall comply with all applicable domestic content procurement preference requirements for iron, steel, manufactured products, and construction materials permanently incorporated into the project, unless a waiver applies. Contractor shall provide certifications, documentation, and product information required by the City, funding agency, or pass-through entity.

16. Small and Minority Businesses, Women's Business Enterprises, Veteran-Owned Businesses,

RESERVED

and Labor Surplus Area Firms

Contractor shall take the affirmative steps required by 2 C.F.R. § 200.321 to assure that small businesses, minority businesses, women's business enterprises, veteran-owned businesses, and labor surplus area firms are used when possible, including, as applicable, placing such businesses on solicitation lists, soliciting them when they are potential sources, dividing requirements when economically feasible, establishing delivery schedules that encourage participation, using appropriate assistance organizations, and requiring subcontractors to take the same affirmative steps.

17. Bonding Requirements for Federal Construction or Facility Improvement Contracts

For construction or facility improvement contracts or subcontracts exceeding the simplified acquisition threshold, Contractor shall comply with the bonding requirements in 2 C.F.R. § 200.326 when the federal award requires such bonding, including bid guarantee, performance bond, and payment bond requirements unless the federal agency or pass-through entity determines that the City's bonding policy and requirements adequately protect the federal interest.

18. Access to Records; Retention

Contractor shall provide the City, the federal awarding agency, the pass-through entity, the Comptroller General of the United States, and their authorized representatives access to any documents, papers, records, and other materials that are directly pertinent to the federal or grant-funded Work for the purpose of making audits, examinations, excerpts, and transcriptions. Contractor shall retain records for the period required by 2 C.F.R. Part 200, the award terms, the Agreement, and applicable law, whichever is longer.

19. No Obligation by Federal Government

The federal government is not a party to this Agreement or any Task Order and is not subject to any obligations or liabilities to the City, Contractor, or any other party arising from the Agreement or Work.

20. Program Fraud and False or Fraudulent Statements

Contractor acknowledges that 31 U.S.C. Chapter 38 and other federal laws concerning fraud, false claims, and false statements may apply to Contractor's actions pertaining to federally funded or grant-funded Work. Contractor shall not submit false, fictitious, fraudulent, or misleading claims, certifications, invoices, records, or statements.

21. Additional Award-Specific Terms

If the federal awarding agency, pass-through entity, grant agreement, disaster assistance program, or other funding source requires additional clauses, certifications, forms, reporting, wage determinations, environmental/historic preservation conditions, civil rights provisions, procurement certifications, or other requirements, such requirements are incorporated into the affected Task Order upon written notice by the City. Contractor shall execute additional documents reasonably required by the City to document compliance.

RESERVED

CITY COMMISSION MEETING
CITY OF ST. PETE BEACH
COMMISSION CHAMBERS

Agenda Report

Agenda Title Name: Authorize the City Manager to execute the Agreement with Hinterland Group, LLC for Wastewater System Rehabilitation Services on an as-needed basis in an amount not to exceed annually appropriated funding.

Action Request: Motion to authorize the City Manager to execute the Agreement with Hinterland Group, LLC for Wastewater System Rehabilitation Services on an as-needed basis in an amount not to exceed annually appropriated funding.

Strategic Objective: Reliable Infrastructure

Date: June 23, 2026

Prepared By: Camden Mills, Public Services Director

Through: Frances Robustelli, City Manager

Summary of Issue: The City publicly advertised a Request for Proposals (RFP) for Wastewater System Rehabilitation Services, including manhole rehabilitation, pipe lining, and point repairs. Fifteen (15) responsive proposals were received on April 8, 2026. Following evaluation, the City's selection committee recommended award to Flotech Environmental LLC, Hinterland Group, LLC, RCM Utilities, LLC, Rowland (DE), LLC, and SAK Construction, LLC based on the following criteria:

- Qualifications and Experience
- References and Past Performance
- Capacity to Perform the Work
- Cost

The contract provides not-to-exceed unit prices for wastewater system manhole rehabilitation, cured-in-place pipe (CIPP) lining, and point repairs on an as-needed basis, allowing the City to efficiently address defects identified through routine inspections, CCTV assessments, emergency response activities, regulatory requirements, and ongoing asset management programs.

Work will be authorized by task order on an as-needed

basis in an amount not to exceed annually budgeted funding. The initial contract term is three (3) years with the option for two (2) additional one (1) year renewals upon mutual agreement and annual appropriation of funds.

Approval of this agreement will provide the City with qualified contractors to perform wastewater rehabilitation services that reduce inflow and infiltration, improve system reliability, extend asset service life, and support the City's wastewater capital improvement and maintenance programs.

Funding: 401.5350.565000 Wastewater Capital Improvements (remaining balance $2,746,041.85)

401.5350.546007 – Wastewater Repairs (remaining balance $279,990.50)

Attachments: 1. Hinterland Services Agreement Signed

CITY OF ST. PETE BEACH, FLORIDA
SERVICES AGREEMENT

Wastewater System Rehabilitation Services

This is an Agreement (the "Agreement") entered into by and between the **CITY OF ST. PETE BEACH** (hereinafter "City") and **HINTERLAND GROUP, LLC.** (hereinafter "Contractor"). The City and Contractor together shall be referred to as the "parties."

WHEREAS, The City properly issued a Request for Proposals, attached and incorporated hereto as Exhibit "B" and the City Commission authorized the selection of Contractor at its 06/23/2023, public hearing.

WHEREAS, City desires to purchase from Contractor the services described in this Agreement.

WHEREAS, Contractor is in the business of providing the services described herein, and has submitted an appropriate proposal to the City to provide the same.

WHEREAS, this Agreement has been properly approved by the appropriate authority of the City and the Contractor.

NOW, THEREFORE, upon the mutual covenants contained herein, and other good and valuable considerations, the sufficiency of which is hereby acknowledged, the parties hereto hereby agree to the following:

1. Recitals. The foregoing recitals are true and correct and incorporated herein by reference.

2. Standard Contract Addendum. The attached Standard Contract Addendum, which contains all the Florida Statutorily required provisions applicable to this Agreement, is attached hereto as Exhibit "A" and its provisions modify and supplement this Agreement.

3. Scope of Services. The Contractor must perform all work for the City required by the contract documents as set forth below:

a. Contractor will furnish all labor, materials, and equipment necessary as indicated in the Request for Bids (Exhibit "B") in the amount of Not To Exceed the Annual Budgeted amount. Funding will be awarded by Task Orders.

b. Contractor must supervise the workforce to ensure that all workers conduct themselves and perform their work in a safe and professional manner. Contractor must comply with all OSHA safety rules and regulations in the operation of equipment and in the performance of the work. Contractor must at all times have a competent field supervisor on the job site to enforce these policies and procedures at the Contractor's expense.

c. Contractor will provide the City with seventy-two (72) hours written notice prior to the beginning of work under this Agreement and prior to any schedule change with the exception of changes caused by inclement weather.

d. Contractor must comply with any and all Federal, State, and local laws and regulations

now in effect, or hereinafter enacted during the term of this Agreement, which are applicable to the Contractor, its employees, agents or subcontractors, if any, with respect to the work and services described herein. The Contractor further warrants that there has been no violation of copyrights or patent rights either in the United States of America or in foreign countries in connection with the work of the contract.

e. Contractor warrants to the City that all goods and materials furnished under the contract will be new unless otherwise specified and that contractor possesses good, clear, and marketable title to said goods and there are no pending liens, claims, or encumbrances whatsoever against said goods. All work not conforming to these requirements, including substitutions not properly approved and authorized may be considered defective. Contractor further warrants that all goods, materials and workmanship furnished, whether furnished by the Contractor or its subcontractors and suppliers, will comply with the specifications, drawings and other descriptions supplied or adopted. Last, Contractor warrants all material and workmanship for a minimum of (1) year from date of project completion and acceptancy by the City. If within one (1) year after acceptance by the City, or within such larger period of time as may be prescribed by law any of the work is found to be defective or not in accordance with the contract documents, the Contractor will, after receipt of a written notice from the City to do so, promptly correct the work.

4. Damages. Time is of the essence in the performance of this Agreement. City shall be entitled to liquidated damages in the amount of $500 per day, for each day after the date set forth in paragraph 10, that Contractor has failed to properly and completely deliver all goods or provide all service specified herein. The Contractor specifically acknowledges that the foregoing sum is reasonable and does not constitute a penalty.

5. Remedies.

   a. Damages. The City reserves the right to recover any ascertainable actual damages incurred as a result of the failure of the Contractor to perform in accordance with the requirements of this Agreement, or for losses sustained by the city resultant from the Contractor's failure to perform in accordance with the requirements of this Agreement.

   b. Correction of Work. If, in the judgment of the City, work provided by the Contractor does not conform to the requirements of this Agreement, or if the work exhibits poor workmanship, the city reserves the right to require that the Contractor correct all deficiencies in the work to bring the work into conformance without additional cost to the City, and/or replace any personnel who fail to perform in accordance with the requirements of this Agreement. The City is the sole judge of non-conformance and the quality of workmanship.

6. Waiver of Liens. Prior to final payment of the Contract Sum, a final waiver of lien must be submitted by all suppliers, subcontractors, and/or Contractors who worked on the project that is the subject of this Agreement.

7. Warranties.
   a. Warranty of Title. Contractor warrants to the City that all goods and materials furnished

under the contract will be new unless otherwise specified and that Contractor possesses good, clear, and marketable title to said goods and there are no pending liens, claims, or encumbrances whatsoever against said goods. All work not conforming to these requirements, including substitutions not properly approved and authorized may be considered defective.

b. Warranty of Specifications. The Contractor warrants that all goods, materials, workmanship furnished, whether by the Contractor or its subcontractors and suppliers, will comply with the specifications, drawings and other descriptions supplied or adopted.

c. Warranty of Merchantability. The Contractor warrants all material and workmanship for a minimum of one (1) year from date of project completion and acceptance by the City. If within one (1) year after acceptance by the city, or within such larger period of time as may be described by law any of the work is found to be defective or not in accordance with the contract documents, the Contractor must after receipt of a written notice from the City to do so, promptly correct the work unless the City has previously given the Contractor a written acceptance of such condition.

8. Term. This Agreement will remain in effect for a period of (3) three years with (2) two, (1) one-year extensions from the Effective Date.

9. Effective date. The "Effective Date" of this Agreement shall be the date this Agreement has been executed by all parties.

10. Termination. This Agreement may be canceled by the City when:
   a. Sufficient funds are not available to continue its full and faithful performance to the Agreement.
   b. Sub-standard or non-performance of Agreement.
   c. The City wishes to terminate the Agreement at any time and for any reason, upon giving thirty (30) days prior written notice to the Contractor.

11. Fiscal Non-funding. If funds for the requested services described herein are not appropriated via the annual budget adoption process, the City reserves the right to cancel the Agreement immediately upon written notice to the Contractor.

12. Non-Exclusivity. Contractor acknowledges that the City may enter into agreements with other consultants or may have its own employees complete the work for services similar to the services that are subject to this Agreement.

13. Compensation. Upon Contractor's satisfactory full performance of the services or in accordance with the payment schedule provided in the attached proposal, City shall pay Contractor, as full consideration for services provided in this Agreement.

14. Insurance. To the extent that this Agreement requires Contractor to provide any services of any kind, Contractor and all of Contractor's subcontractors shall maintain public liability insurance in a combined single limit for bodily injury and property damage in the amount of not less than $1,000,000.00, satisfactory to the City Manager, naming the City as an additionally named insured and providing coverage up through and including the final performance of any services provided

herein. Contractor and all of Contractor's subcontractors shall maintain in full force and effect a policy of worker's compensation insurance for all of Contractor's employees in accordance with applicable state and federal law. Said insurance coverage shall include employer's liability with a single limit of $100,000.00 per accident or occurrence. Contractor shall present City with a certificate for all the foregoing insurance, at the time of executing this Agreement and at such other times requested by the City.

The Contractor waives all rights against the City, its consultants, separate contractors, if any, and any of its subcontractors, agents and employees, for any and all damages caused to the extent covered by insurance described herein and obtained pursuant to this Section or other property insurance applicable to the services and product provided under this Agreement. The City shall require of the Contractor, Contractor's consultants, separate contractors, if any, and the subcontractors, sub-subcontractors, agents and employees of any of them, by appropriate agreements, written where legally required for validity, similar waivers each in favor of other parties enumerated herein. The policies shall provide such waiver of subrogation by endorsement otherwise. A waiver of subrogation shall be effective as to a person or entity even though that person or entity would otherwise have a duty of indemnification, contractual or otherwise, did not pay the insurance premium directly or indirectly, and whether or not the person or entity had an insurable interest in the property damaged.

15. Indemnification. In consideration of the payment of ten dollars as part of the compensation described herein, such sum being specifically found by Contractor to be sufficient consideration for this indemnification, Contractor shall indemnify, defend and hold the City harmless for itself, its past/present/future elected and appointed officials, its employees, agents and assigns, from and against any and all losses, claims, damages, suits, actions, liability or demands, including attorneys' fees and costs of litigation through all appellate proceedings, arising from the performance or non-performance of this Agreement, whether caused in part by the City or not, and in connection with violations of copyrighted or trademarked materials used by Contractor, loss of life, bodily or personal injury, or property damage, including loss of use thereof, directly or indirectly caused by, resulting from, arising out of or occurring in connection with the operations of the Contractor or its officers, employees, agents, subcontractors, or independent Contractors, excepting only such loss of life, bodily or personal injury, or property damage solely attributable to the gross negligence or willful misconduct of the City or its elected or appointed officials and employees. In any and all claims against the City, or any of their agents or employees by any employee of the Contractor any subcontractor, anyone directly or indirectly employed by any of them or anyone for whose acts any of them may be liable, the indemnification obligation under this paragraph is not limited in any way by any limitation in this amount or type of damages compensation or benefits payable by or for the Contractor or any subcontractor under Workers' Compensation Acts, Disability Benefit Acts or other Employee Benefit Acts. Nothing contained herein is intended nor may it be construed, to waive City's rights and immunities under the common law or Section 768.28, Florida Statutes, as amended from time to time; nor will anything included herein be construed as consent to be sued by any third parties in any matter arising out of this Agreement. To the extent considered necessary by the Contract Administrator and the City Attorney, any sums due Contractor under this Agreement may be retained by the City until all of the City's claims subject to this indemnification obligation have been settled or otherwise resolved, and any amount withheld is not subject to payment of interest by the City. The above provisions

will survive the termination or expiration of this Agreement and will pertain to any occurrence during the term of this Agreement, even though the claim may be made after the termination or expiration hereof.

16. Discriminatory Vendor List. Contractor hereby acknowledges its continuous duty to disclose to the City if the Contractor or any of its affiliates, as defined by Section 287.134 (1)(a), Florida Statutes, are placed on the Discriminatory Vendor List. Pursuant to Section 287-134 (2)(a), Florida Statutes: "An entity or affiliate who has been placed on the discriminatory vendor list may not submit a bid, proposal, or reply on a contract to a public entity; may not submit a bid or proposal, or reply on a contract with a public entity for the construction or repair of a public building or public work; may not submit bids, proposals, or replies on leases of real property to a public entity; may not be awarded or perform work as a contractor, supplier, subcontractor, or consultant under a contract with any public entity; and may not transact business with any public entity."

17. Independent Contractor. This Agreement does not create an employee/employer relationship between the parties. It is the intent of the parties that the Contractor is an independent contractor under this Agreement and not the City's employee for any purposes, including but not limited to, the application of the Fair Labor Standards Act minimum wage and overtime payments, Federal Insurance Contribution Act, the Social Security Act, the Federal Unemployment Tax Act, the provisions of the Internal Revenue Code, the State Worker's Compensation Act, and the State Unemployment Insurance law. The Contractor will retain sole and absolute discretion in the judgment of the manner and means of carrying out Contractor's activities and responsibilities hereunder provided, further that administrative procedures applicable to services rendered under this Agreement will be those of Contractor, which policies of Contractor will not conflict with City, State, or United States policies, rules, or regulations relating to the use of Contractor's funds provided for herein. The contractor agrees that it is a separate and independent enterprise from the City, that it had full opportunity to find other business, that it has made its own investment in it business, and that it will utilize a high level of skill necessary to perform the work. This Agreement must not be construed as creating any joint employment relationship between the Contractor and the City and the City will not be liable for any obligation incurred by Contractor, including but not limited to unpaid minimum wages and/or overtime premiums.

18. Audit Rights. The City reserves the right to audit the records of the Contractor for the commodities and/or serves provided under the contract at any time during the performance and term of the contract and for a period of five (5) years after completion and acceptance by the City. If required by the City, the Contractor agrees to submit to an audit by an independent certified public accountant selected by the City. The Contractor must allow the City to inspect, examine and review the records of the Contractor in relation to this Agreement at any an all times during normal business hours during the term of the Agreement.

19. Exhibits. The following Exhibits shall be attached, incorporated, and made a part of this Agreement:

a. Standard Contract Addendum (Exhibit "A")
b. Request for Bid/Proposal (Exhibit "B")
c. Vendor Bid/Proposal (Exhibit "C")

d. Conditional Federal/Grant-Funded Contract Addendum (Exhibit "D")

20. Notices. All notices sent pursuant to this Agreement shall be given in writing via certified mail or overnight courier and shall be delivered to the following addresses:

As to Contractor:
Hinterland Group, LLC
2051 W. Blue Heron Blvd
Riviera Beach, FL 33404

As to City:
City Manager
City of St. Pete Beach
155 Corey Avenue
St. Pete Beach, FL 33706

With Copy To:
info@hinterlandgroup.com

With Copy To:
attorney@stpetebeach.org

21. Conflicts and Severability. To the extent that any terms in the attached proposal conflict with the terms of this Agreement, the terms of this Agreement shall control and supersede such conflicting terms in the attached proposal, to the extent of such conflict. If any section, part of section, paragraph, clause, phrase, or word of this Agreement is declared invalid, the remaining provisions of this Agreement shall not be affected.

22. Amendments. This document and exhibits embody the entire Agreement of the parties. There are no promises, terms, conditions, or representations binding on either party hereto, other than those contained herein; and this document shall supersede all previous communications, representations, and/or agreements between the parties hereto, whether written or oral. This Agreement shall not be modified by any oral statement, communication, Agreement, course of conduct, or by anything other than a writing signed by the parties. This Agreement may be amended or modified only in writing signed by all parties hereto.

23. Jurisdiction, Venue, Attorney Fees. This Agreement shall be governed and construed according to the laws of Florida, and venue for any action arising herefrom shall be in Pinellas County, Florida. The prevailing party in any action to enforce or interpret this Agreement shall be entitled to reasonable attorney's fees incurred through all appellate proceedings.

24. Assignment. This Agreement shall be binding upon the parties, their successors, assigns, and legal representatives. Contractor shall not assign or otherwise transfer any of the rights or duties under this Agreement, without the express written consent of the City.

25. Counterparts. This Agreement may be executed and delivered in any number of counterparts, each of which so executed and delivered shall be deemed to be an original and all of which shall constitute one and the same instrument. Facsimile, documents executed, scanned and transmitted electronically and electronic signatures shall be deemed original signatures for purposes of this Agreement and all matters related thereto, with such facsimile, scanned and electronic signatures having the same legal effect as original signatures.

26. Authority. Contractor hereby acknowledges that the person executing this Agreement on behalf of Contractor has the full authority to do so and to bind Contractor to the terms hereof.

IN WITNESS WHEREOF, the Parties have executed this Agreement on the day and year set forth below.

Under penalties of perjury, and pursuant to Sec. 92.525, Fla. Stat., Contractor declares that Contractor has read the Section 15 of the Standard Contract Addendum, Exhibit "A", and that the facts stated in it are true.

Hinterland Group, LLC:

Signature: _____

By: Chase Rogers

Its: COO

Date: 6/2/2026

City of St. Pete Beach:

Signature: _____

By: Frances Robustelli

Its: City Manager

Date: _____

APPROVED AS TO FORM
AND LEGAL SUFFICIENCY:

_____
Ralf Brookes
City Attorney

ATTEST:

_____
Renee Rose
City Clerk

EXHIBIT "A"

Standard Contract Addendum

(Place Standard Contract Addendum behind this page)

CITY OF ST. PETE BEACH, FLORIDA
STANDARD CONTRACT ADDENDUM

THIS STANDARD CONTRACT ADDENDUM is made and entered into this ____ day of _____, 2026, by and between the CITY OF ST. PETE BEACH, a Florida municipality, hereinafter referred to as the "City", and _____, hereinafter referred to as "Contractor", concerning that certain agreement dated the ____ day of _____, 2026 ("Agreement") and titled _____.

WITNESSETH:

WHEREAS, Section 119.0701, Fla. Stat., requires that certain public agency contracts must include certain statutorily required provisions concerning the contractor's compliance for Florida's Public Records Act; and

WHEREAS, Section 768.28, Fla. Stat., sets forth certain mandatory limitations on indemnification and liability for Florida public agencies; and

WHEREAS, Florida law requires that public agency contracts be subject to non-appropriation and thereby contingent upon appropriation during the public agency's statutorily mandated annual budget approval process; and

WHEREAS, Section 448.095, Fla. Stat., imposes certain obligations on public agencies with regard to the use of the E-Verify system by their contractors and subcontractors; and

WHEREAS, Section 287.133 and 287.135, Fla. Stat., provides restrictions on local governments contracting with companies that are on certain Scrutinized Companies lists or convicted vendor list; and

WHEREAS, additional terms required by Sections 282.3185(5) and (6) Fla. Stat. related to data management and Section 287.05701 Fla. Stat. related to social government and corporate activism are also added by virtue of this Addendum; and

WHEREAS, Section 286.101, Florida Statutes contains a list of "foreign countries of concern" including, the People's Republic of China, the Russian Federation, the Islamic Republic of Iran, the Democratic People's Republic of Korea, the Republic of Cuba, the Venezuelan regime of Nicolás Maduro, or the Syrian Arab Republic, including any agency of or any other entity under significant control of such "foreign country of concern". Any entity that does business with a state agency or political subdivision must disclose certain of their dealings with those "foreign countries of concern" to the Florida Department of Financial Services; and

WHEREAS, Section 787.06(13), Fla. Stat. provides that when a contract is executed, renewed, or extended between a nongovernmental entity and a governmental entity, the nongovernmental entity must provide the governmental entity with an affidavit signed by an

officer or a representative of the nongovernmental entity under penalty of perjury attesting that the nongovernmental entity does not use coercion for labor or services as defined in such statute;

NOW, THEREFORE, in consideration of the covenants set forth herein, the parties agree to this addendum as follows:

1. Amendment. This Addendum hereby amends and supplements the terms of the Agreement. In the event of a conflict between the terms of the Agreement and terms of the Addendum, the terms of the Addendum shall prevail.

2. Public Records Compliance. Contractor agrees that, to the extent that it may "act on behalf" of the City within the meaning of Section 119.0701(1)(a), Florida Statutes in providing its services under this Agreement, it shall:

(a) Keep and maintain public records required by the public agency to perform the service.

(b) Upon request from the public agency's custodian of public records, provide the public agency with a copy of the requested records or allow the records to be inspected or copied within a reasonable time at a cost that does not exceed the cost provided in this chapter or as otherwise provided by law.

(c) Ensure that public records that are exempt or confidential and exempt from public records disclosure requirements are not disclosed except as authorized by law for the duration of the contract term and following completion of the contract if the contractor does not transfer the records to the public agency.

(d) Upon completion of the contract, transfer, at no cost, to the public agency all public records in possession of the contractor or keep and maintain public records required by the public agency to perform the service. If the contractor transfers all public records to the public agency upon completion of the contract, the contractor shall destroy any duplicate public records that are exempt or confidential and exempt from public records disclosure requirements. If the contractor keeps and maintains public records upon completion of the contract, the contractor shall meet all applicable requirements for retaining public records. All records stored electronically must be provided to the public agency, upon request from the City's custodian of public records, in a format that is compatible with the information technology systems of the City.

(e) Pursuant to Section 119.0701(2)(a), Fla. Stat., **IF THE CONTRACTOR HAS QUESTIONS REGARDING THE APPLICATION OF CHAPTER 119, FLORIDA STATUTES, TO THE CONTRACTOR'S DUTY TO PROVIDE PUBLIC RECORDS RELATING TO THIS AGREEMENT, CONTACT THE CUSTODIAN OF PUBLIC RECORDS AT:**

Renee Rose
City Clerk/Public Records Custodian
cityclerk@stpetebeach.org

Phone: 727-363-9220
155 Corey Avenue
St. Pete Beach, FL 33706
Fax: 727-541-8040

3. **Public Records Compliance Indemnification.** Contractor agrees to indemnify and hold the City harmless against any and all claims, damage awards, and causes of action arising from the contractor's failure to comply with the public records disclosure requirements of Section 119.07(1), Florida Statutes, or by contractor's failure to maintain public records that are exempt or confidential and exempt from the public records disclosure requirements, including, but not limited to, any third party claims or awards for attorneys' fees and costs arising therefrom. Contractor authorizes the public agency to seek declaratory, injunctive, or other appropriate relief against Contractor in Pinellas County Circuit Court on an expedited basis to enforce the requirements of this section.

4. **Compliance/Consistency with Section 768.28, Fla. Stat.** Any indemnification or agreement to defend or hold harmless by City specified in the Agreement shall not be construed as a waiver of City's sovereign immunity, and shall be limited to such indemnification and liability limits consistent with the requirements of Section 768.28, Fla. Stat. and subject to the procedural requirements set forth therein. Any other purported indemnification by City in the Agreement in derogation hereof shall be void and of no force or effect.

5. **Non-appropriation.** City's performance and obligation to pay under this Agreement is contingent upon an appropriation during the City's annual budget approval process. If funds are not appropriated for a fiscal year, then the Contractor shall be notified as soon as is practical by memorandum from the City Manager or designee that funds have not been appropriated for continuation of the Agreement, and the Agreement shall expire at the end of the fiscal year for which funding has been appropriated. The termination of the Agreement at fiscal year end shall be without penalty or expense to the City subject to the City paying all invoices for services rendered during the period the Agreement was funded by appropriations.

6. **E-Verify Compliance.** By entering into this Agreement, the Contractor is obligated to comply with the provisions of Section 448.095, Fla. Stat. "Employment Eligibility," as amended from time to time. This includes but is not limited to register with and use the E-Verify System to verify the work authorization status of all newly hired employees, and requiring all subcontractors to provide an affidavit to Contractor attesting that the subcontractor does not employ, contract with, or subcontract with, an unauthorized alien. Contractor agrees to maintain a copy of such affidavit for the duration of this Agreement. Failure to comply with this paragraph will result in the termination of this Agreement as provided in Section 448.095, Fla. Stat., as amended and Contractor will not be awarded a public contract for at least one (1) year after the date on which the Agreement was terminated. Contractor will also be liable for any additional costs to the City as a result of the termination of this Agreement in accordance with this paragraph. Contractor affirmatively states, under penalty of perjury, that in accordance with Section 448.095, Fla. Stat., Contractor is registered with and uses the E-Verify system to verify the work authorization status of all newly hired employees, that in accordance with such statute, Contractor requires from each of its subcontractors an affidavit stating that the subcontractor does not employ, contract with, or

subcontract with an unauthorized alien, and that Contractor is otherwise in compliance with Sections 448.09 and 448.095, Fla. Stat.

7. Compliance/Consistency with Scrutinized Companies Provisions of Florida Statutes. Section 287.135(2)(a), Fla. Stat., prohibits a company from bidding on, submitting a proposal for, or entering into or renewing a contract for goods or services of any amount if, at the time of contracting or renewal, the company is on the Scrutinized Companies that Boycott Israel List, created pursuant to Section 215.4725, Fla. Stat., or is engaged in a boycott of Israel. Section 287.135(2)(b), Fla. Stat., further prohibits a company from bidding on, submitting a proposal for, or entering into or renewing a contract for goods or services over one million dollars ($1,000,000) if, at the time of contracting or renewal, the company is on either the Scrutinized Companies with Activities in Sudan List or the Scrutinized Companies with Activities in the Iran Petroleum Energy Sector List, both created pursuant to section 215.473, Fla. Stat., or the company is engaged in business operations in Cuba or Syria. Contractor hereby certifies that Contractor is not listed on any of the following: (i) the Scrutinized Companies that Boycott Israel List, (ii) Scrutinized Companies with Activities in Sudan List, or (iii) the Scrutinized Companies with Activities in the Iran Petroleum Energy Sector List. Contractor further hereby certifies that Contractor is not engaged in a boycott of Israel or engaged in business operations in Cuba or Syria. Contractor understands that pursuant to section 287.135, Fla. Stat., the submission of a false certification may subject Contractor to civil penalties, attorney's fees, and/or costs. Contractor further understands that any contract with City for goods or services of any amount may be terminated at the option of City if Contractor (i) is found to have submitted a false certification, (ii) has been placed on the Scrutinized Companies that Boycott Israel List, or (iii) is engaged in a boycott of Israel. And, in addition to the foregoing, if the amount of the contract is one million dollars ($1,000,000) or more, the contract may be terminated at the option of City if the company is found to have submitted a false certification, has been placed on the Scrutinized Companies with Activities in Sudan List or the Scrutinized Companies with Activities in the Iran Petroleum Energy Sector List, or has been engaged in business operations in Cuba or Syria.

8. Disclosure Requirements for "Foreign Countries of Concern". CONTRACTOR shall comply with the disclosure requirements set forth is Section 286.101 (3) (a), Fla. Stat., which requires "Any entity that applies to a state agency or political subdivision for a grant or proposes having a contract value of $100,000 or more shall disclose to the state agency or political subdivision any current or prior interest of, any contract with, or any grant or gift received from a "foreign country of concern" if such interest, contract, grant or gift received from a "foreign country of concern" if such interest, contract, grant or gift has a value of $50,000 or more and such interest existed at any time or such contract, grant or gift was received or in force at any time during the previous five (5) years. Such disclosure shall contain the name and mailing address of the disclosing entity, the amount of the gift or the value of the interest disclosed, the applicable "foreign country of concern" and, if applicable the date of termination of the contract or interest, the date of receipt of the grant or gift and the name of the agent or controlled entity that is the source or interest holder. Within one (1) year before applying for any grant or proposing any contract, such entity must provide a copy of such disclosure to the Department of Financial Services". Pursuant to Section 286.101(7), Fla. Stat.: "In addition to any fine assessed under [section 286.101(7)(a), F.S.], a final order determining a third or subsequent violation by an entity other than a state agency or political subdivision shall automatically disqualify the entity from

eligibility for any grant or contract funded by a state agency or any political subdivision until such ineligibility is lifted by the Administration Commission for good cause."

9. Venue and Jurisdiction. Notwithstanding any of other provision to the contrary, this Agreement and the parties' actions under this Agreement shall be governed by and construed under the laws of the State of Florida, without reference to conflict of law principles. As a material condition of this Agreement, each Party hereby irrevocably and unconditionally: i) consents to submit and does submit to the jurisdiction of the Circuit Court in and for Pinellas County, Florida for any actions, suits or proceedings arising out of or relating to this Agreement. Both parties waive any right to file an action, suit or proceeding in Federal Court or remove any action, suit or proceeding to Federal Court.

10. Attorneys' Fees and Costs. Notwithstanding any of other provision to the contrary, if litigation ensues regarding this Agreement, each party hereto shall bear its own attorneys' fee and costs.

11. Public Entities Crime or Convicted Vendor List. Contractor agrees and assumes a continuous duty to disclose to the City if the Contractor or any of its affiliates as defined by Section 287.133(1)(a), Florida Statutes are placed on the Convicted Vendor List or the Antitrust Violator Vendor List maintained by the Florida Department of Management Services.

12. Data Management; Notice of Breach. Contractor shall cooperate with the City and provide timely incident reporting, response activities/fact gathering, public and agency notification, severity level assessment, after-action reports, etc., which the City must report in accordance with Sections 282.3185(5) & (6), Florida Statutes in the event of a data breach.

13. Environmental and Social Government and Corporate Activism. The City has not given preference or requested documentation from the Contractor based on Contractor's social, political or ideological interest. Contractor agrees to similarly not request documentation or give preference to any subcontractor based on the subcontractor's social, political or ideological interests.

14. Taxes. The City shall not be liable for any taxes and assessments imposed by a federal, state or local governmental agency to the extent that the City is exempt from same by Florida law, including but not limited to any sales or use tax.

15. No coercion for labor or services. The Contractor swears under penalty of perjury that the Contractor does not use coercion for labor or services as defined as follows:

"Coercion" means:

1. Using or threatening to use physical force against any person;
2. Restraining, isolating, or confining or threatening to restrain, isolate, or confine any person without lawful authority and against her or his will;
3. Using lending or other credit methods to establish a debt by any person when labor or services are pledged as a security for the debt, if the value of the labor or services as reasonably assessed is not applied toward the liquidation of the debt, the length and nature of the labor or services are not respectively limited and defined;

4. Destroying, concealing, removing, confiscating, withholding, or possessing any actual or purported passport, visa, or other immigration document, or any other actual or purported government identification document, of any person;

5. Causing or threatening to cause financial harm to any person;

6. Enticing or luring any person by fraud or deceit; or

7. Providing a controlled substance as outlined in Schedule I or Schedule II of Sec. 893.03, Fla. Stat. to any person for the purpose of exploitation of that person.

16. Force Majeure. The City reserves the right to suspend, modify or terminate this contract in the event of an act of god or act of man beyond the control of the parties, including but not limited to a hurricane, tropical storm, tornado, or other destructive weather event, flooding, pandemic, plague, war, armed conflict, domestic or foreign terrorism, riot, labor condition, state or federal governmental action, and catastrophic Internet disturbance, making performance inadvisable, economically impracticable, illegal, or impossible.

17. Additional Terms. Notwithstanding any of other provision to the contrary, the parties agree as follows:

A. None.

IN WITNESS WHEREOF, the parties hereto have executed and delivered this instrument on the days and year indicated below and the signatories below to bind the parties set forth herein.

Under penalties of perjury, and pursuant to Sec. 92.525, Fla. Stat., Contractor declares that Contractor has read the foregoing Section 15 above and that the facts stated in it are true.

Contractor:

_____

Print Name: Chase Rogers

Title: COO

Company: Hinterland Group, LLC

HINTERLAND GROUP, LLC CORPORATE SEAL JUNE 26, 2006 FLORIDA

ATTEST:

_____

Renee Rose, City Clerk

City of St. Pete Beach:

_____

Frances Robustelli, City Manager

EXHIBIT "B"

Request for Bid/Proposal

(Place Request for Bid/Proposal behind this page)

City of St Pete Beach
Request for Proposal

Wastewater System Rehabilitation Services

Timeline	Date	Time
Publication of Bid	03/11/2026	8:00 AM
Pre-Bid Meeting	03/18/2026	11:00 AM
Deadline for Question Submission	03/25/2026	10:00 AM
Submittal Deadline electronically via Bonfire	04/08/2026	9:00 AM
Submittal Opening	04/08/2026	10:00 AM

Submittals are due on or before
04/08/2026 at 9:00 AM EST
Electronically Via Bonfire Only

TABLE OF CONTENTS

I. INVITATION 3
II. STATEMENT OF WORK AND TECHNICAL SPECIFICATIONS 4
III. BID FORM 5
IV. GENERAL CONTRACT TERMS 6
V. REFERENCES & MINIMUM QUALIFICATIONS 17
VI. CONTRACTOR'S PROPOSAL SUBMITTAL 18
VII. PUBLIC ENTITY CRIMINAL AFFIDAVIT 19
VIII. NON-COLLUSION AFFADAVIT 21

I. INVITATION

The City of St Pete Beach has issued this Request for Proposal (RFP) to solicit competitive bids and proposals from Proposers for Wastewater System Rehabilitation Services, including manhole rehabilitation, pipe lining and point repairs.

The proposed work will be located within the City of St. Pete Beach in Pinellas County, FL, throughout the entire wastewater collection and transmission system. Each asset to be rehabilitated and the type of rehabilitation required will be identified in each individual Work Order with the location shown on corresponding geographical exhibits.

The successful proposer shall furnish all labor, superintendence, materials, power, light, heat, fuel, water, tools, appliances, equipment, supplies, shop drawings, working drawings and other means of construction necessary or proper for performing and completing the work. The Contractor is responsible for obtaining all required permits necessary for the work, including all applications and review fees, other than those permits which may have already been obtained. The Contractor shall perform and complete the work in a speedy and efficient manner consistent with safety of life and property and to the city's satisfaction, and in strict accordance with the Contract Documents. The Contractor shall repair or restore all structures and property damaged or disturbed during performance of the work.

The types of projects include:

- **Wastewater System Manhole Rehabilitation (Manhole Project):**
  The Contractor shall furnish all labor, material, equipment, and services necessary for manhole rehabilitation. The work shall be completed at various locations through the City's wastewater service area and shall include, but is not limited to, maintenance of traffic, temporary by-pass pumping and/or diversion of wastewater, cleaning, removal and disposal of all sand, rubble, deposits, and other accumulated debris, re-building manhole bench and channels, ring (frame) and cover adjustment and replacement, pavement restoration, inflow/infiltration elimination, surface preparation, cementitious and polymer coatings installation, internal chimney sealing, manhole cover insert installation, testing, project site cleanup and restoration, and all other incidentals as required and directed by the Engineer to complete the work.
- **Wastewater System Pipe Lining (Lining Project):**
  The Contractor shall furnish all labor, material, equipment, and services necessary for wastewater pipe rehabilitation using Cured-In-Place-Pipe (CIPP) lining. The work shall be completed at various locations through the City's wastewater service area and shall include, but is not limited to, maintenance of traffic, temporary by-pass pumping and/or diversion of wastewater, cleaning, removal and disposal of all sand, rubble, deposits, and other accumulated debris, CIPP liner installation, reconnection of service laterals, testing of CIPP liners, project site cleanup and restoration, and all other incidentals as required and directed by the Engineer to complete the work.
- **Wastewater System Point Repairs (Point Repair Project):**
  The Contractor shall furnish all labor, material, equipment, and services necessary for wastewater point repairs. The work shall be completed at various locations throughout the City's wastewater service area and shall include, but is not limited to, maintenance of traffic, temporary by-pass pumping and/or diversion of wastewater, dewatering, directional drilling, jack and boring, remove unsuitable materials below trench grade, sanitary sewer gravity and force main installation, force main and gravity main connections, remove out of service gravity and force mains, install manhole connections, grout out of service pipe, install valves and associated appurtenances, project site cleanup and restoration, and all other incidentals as required and directed by the Engineer to complete the work.

CONTACT INFORMATION
Procurement Manager – Sara Spain
Email – purchasing@stpetebeach.org

II. STATEMENT OF WORK AND TECHNICAL SPECIFICATIONS

See attached Technical Specifications Word document.

III. BID FORM

See attached Bid Form Excel document.

IV. GENERAL CONTRACT TERMS

REQUEST FOR PROPOSALS
Wastewater System Rehabilitation Services

REQUEST FOR PROPOSAL SUMMARY
The City of St Pete Beach has issued this Request for Proposal (RFP) to solicit competitive bids and proposals from Proposers for Wastewater System Rehabilitation Services, including manhole rehabilitation, pipe lining and point repairs.

The successful bidder shall provide all labor, materials, equipment, tools, consumables, transportation, and incidentals to provide Public Services capital improvement projects construction services on an 'as needed' basis for the City of St Pete Beach.

The "City" intends to **award multiple contracts** to vendors who can provide the best value for services. Vendors may submit proposals for all, some, or only one of the categories. **It is not mandatory to submit a proposal for every item listed**. A bidder may bid on any, all, or none of the items. The "City" reserves the right to select multiple vendors to optimize cost-efficiency and capability across different segments of the project. Proposals will be evaluated based on capability, cost, and capacity to perform the specific line items requested.

PROPOSAL SUBMITTALS
Proposal documents must include a signed/notarized Contractor's Proposal Submittal, Bid Form, References, Contractor's license and insurance certificates, and Public Entity Criminal Affidavit. The Contractor shall submit electronic proposals only. Bidders must submit electronically only through Bonfire platform. When bidding electronically, only one copy should be submitted.

Proposals shall include the following:

- A signed and notarized Proposer's Contract Proposal.
- Current proof of insurance certificate.
- A list of references and minimum qualifications as outlined in Section V.
- One copy of bid electronically submitted to Bonfire platform.

The City is not responsible for any Addendums or other supplementary information that is not received due to non-submittal of the aforementioned information. Please refer back to the city website (http://www.stpetebeach.org/news-and-links/city-projects.html) for additional project information as it becomes available. The City reserves the right to decide whether to answer addendums or not. The City is not required to provide any additional information.

Proposers or persons wishing to submit a proposal on this project shall be licensed, and insured in accordance with the City's requirements

The City of St. Pete Beach reserves the right to reject any or all proposals or parts of proposals, or accept any proposal or part thereof deemed to be in the best interests to the City of St. Pete Beach.

Electronic proposals must be submitted by **9:00 AM on April 08, 2026 (Deadline),** clearly marked as: **"Wastewater System Rehabilitation Services."**

PRE-PROPOSAL MEETING
An optional pre-proposal meeting will be held on **March 18, 2026 at 11:00 AM EST** via Microsoft Teams conference/Teleconference. Please contact the City's Procurement Manager (purchasing@stpetebeach.org) for a meeting invitation and instructions.

WRITTEN REQUESTS FOR INTERPRETATIONS/CLARIFICATIONS
No oral interpretations will be made to any firms as to the meaning of the scope of work or any other contract documents included in this **RFP.** All questions pertaining to the terms and conditions or scope of work of this Request for Proposal **(RFP)** must be sent in writing via email only to the City Procurement Manager (purchasing@stpetebeach.org) and shall be received no later than **10:00 AM EST on March 25, 2026.** Responses to questions may be handled as an Addendum if the response would provide clarification to the requirements of the **RFP**. All such Addenda shall become a part of the contract documents. The City will not be responsible for any other explanation or interpretation of the proposed **RFP** made or given prior to the award of the contract. The City will not respond to questions received after the specified deadline. The City reserves the right to respond to any and all questions but is not required to do so. If the Proposer discovered the opportunity through the online platform (Bonfire), do not submit questions through these platforms. **Only questions emailed directly to the City Procurement Manager will be answered.**

BEGINNING DATE
The Proposer shall, within ten (10) business days after receipt of the Notice of Award and before commencement of any operations hereunder, execute the Agreement. Additionally, the Proposer shall, within twenty (20) business days after receipt of the Notice of Award, provide all required documentation to the City.

COMPLETION OF WORK
The work will be completed on an as-needed basis. Each location that needs to be surveyed, repaired and/or worked on will constitute it's own "job". This will be a three (3) year initial contract with the option to be extended for two (2) additional one (1) year periods upon mutual consent of both parties. It is the intent of the City of St Pete Beach to award these services to more than one Contractor/Vendor.

COSTS INCURRED BY PROPOSERS
All expenses involved with the preparation and submission of proposals to the City, or any work performed in connection therewith, shall be borne solely by the Proposers. No payment will be made for any responses received or for any other effort required of or made by; the Proposer's prior to contract commencement.

ORAL PRESENTATION
The City may require an oral presentation of the proposal at the Evaluation Committee's discretion. This could also include a formal interview of any and all members of the Proposer's contract management staff.

CONFLICT OF INTEREST
The Proposer represents that it presently has no interest and shall acquire no interest, either direct or indirect, which would conflict in any manner with the performance or services required hereunder, as provided for in FL Stat. 112.311. The Proposer further represents that no person having any interest shall be employed for said performance.

The Proposer shall promptly notify the City's representative, in writing, by certified mail, of all potential conflicts of interest for any prospective business association, interest, or other circumstance, which may influence or appear to influence the contractor's judgment or quality of services being provided hereunder. Such written notification shall identify the prospective business association, interest or circumstance, the nature of work that the Proposer may undertake and request an opinion of the city as to whether the association, interest or circumstance would, in the opinion of the City, constitute a conflict of interest if entered into by the Proposer. The City agrees to notify the Proposer of its opinion by certified mail within thirty days of receipt of notification by the Proposer.

LATE PROPOSAL OR MODIFICATIONS
Modifications in writing received prior to the time set for the proposal submittal will be accepted. Proposal modifications received after the time set for the proposal submittal will not be considered.

RELATED PARTIES AND MULTIPLE PROPOSALS
Where two (2) or more related parties each submit a proposal or multiple proposals are received from (1) Proposer, for any such contract, such proposals shall be judged non-responsive. Related parties mean Proposers or the principles thereof, which have a direct or indirect ownership interest in another Proposer for the same contract or in which a parent company or the principles thereof where one (1) Proposer has a direct ownership interest in another Proposer for the same contract.

RIGHT TO AUDIT
The City of St. Pete Beach reserves the privilege of auditing a Proposer's record as such records relate to purchases or work between the City and said Proposer. Records should be maintained for three years from contract date.

VARIANCE FROM STANDARD TERMS & CONDITIONS
All standard terms and conditions stated throughout the RFP apply to this contract except as specifically stated. This should be fully understood by Proposers prior to submitting a proposal.

ASSIGNMENT
The Proposer shall perform this contract. No assignment or subcontracting shall be allowed without prior written consent of the City. If a Proposer intends to subcontract a portion of this work, the Proposer must disclose that intent in the proposal. In the event of a corporate acquisition and/or merger, the Contractor shall provide written notice to the City within thirty (30) business days of Proposer's notice of such action or upon the occurrence of said action, whichever occurs first. The right to terminate this contract, which shall not be unreasonably exercised by the City shall include but not be limited to, instances in which a corporate acquisition and/or merger represent a conflict of interest or are contrary to any local, state, or federal laws. Action by the City awarding a proposal to a firm that has disclosed its intent to assign or subcontract in its response to the RFP, without exception shall constitute approval for purpose of this Agreement.

LOBBYING Lobbying of Evaluation Committee members, City employees, or elected officials regarding request for proposals, request for qualifications, bids or contracts, during the pendency of bid award or bid protest, by the bidder/proposer/protestor or any member of the bidder's/proposer's/protestor's staff, an agent of the bidder/proposer/protestor, or any person employed by any legal entity affiliated with representing an organization that is responding to the request for proposal, request for qualification, bid or contract, or has a pending bid protest is strictly prohibited either upon advertisement or on a date established by the City and shall be prohibited until either an award is final or the protest is finally resolved by the City Manager or Procurement Manager; provided, however, nothing herein shall prohibit a prospective bidder/proposer from contacting City departments to address situations such as clarification and/or questions related to the procurement process. For purposes of this provision, lobbying activities shall include but not be limited to, influencing or attempting to influence action or non-action in connection with any requests for proposal, request for qualification, bid or contract through direct or indirect oral or written communication or an attempt to obtain goodwill of persons and/or entities specified in this provision. Such actions may cause any request for proposal, request for qualification, bid or contract to be rejected.

ADDITIONAL REQUIREMENTS
The City reserves the right, by change order, to unilaterally add or delete locations/services, either collectively or individually, at the City's sole option, at any time after award has been made as may be deemed necessary or in the best interest of the City. In such case, the Proposer will be required to provide or reduce services to this contract in accordance with the terms, conditions, and specifications.

SERVICES AGREEMENT
A written agreement incorporating the RFP and the successful proposal will be prepared by the City, signed by the successful Proposer, and presented to the City Commission for approval and signature.

INTEGRITY OF REQUEST FOR PROPOSAL DOCUMENTS
Proposers shall use the original RFP forms provided within the RFP and enter information in the spaces where a response is requested. Proposers may use an attachment as an addendum to the RFP forms if sufficient space is not available on the original form for the Proposer to enter a complete response. Any modifications or alterations to the original RFP documents by the Proposer, whether intentional or otherwise, will constitute grounds for rejection of the RFP. Any such modifications or alterations a Proposer wishes to propose must clearly be stated in the Proposer's RFP response and presented in the form of an addendum to the original RFP documents.

RESPONSIBILITY OF THE CITY MANAGER OR DESIGNEE
The term "City Manager or designee" wherever used in this Contract shall be the City of St. Pete Beach or its duly authorized representative. Notices of any change in the City Manager or designee shall be given in writing by the City to the Contractor. The City Manager or designee shall have full authority to interpret the contract and requirements and shall determine acceptance of the work under this Contract and every question relative to the fulfillment of the terms and provisions therein. It shall be the duty of the City Manager or designee to enforce the contract terms in a fair and unbiased manner.
If a variation from any requirements is allowed, the City Manager or designee shall grant the same in writing with the reasons for his action outlined, and such action will not invalidate or change the Contract in any other manner.

EXAMINATION OF SITE
Proposer shall carefully examine project site and be familiar with the work required for the project, investigate all site conditions that may affect execution of work as detailed in the construction documents. Contact the City's Procurement Manager or their designee for changes or alterations before proceeding.

ASSURANCES
The responding Proposer shall provide a statement of assurance that the Proposer is not presently in violation of any statutes or regulatory rules that might have an impact on the firm's operations. All applicable laws and regulations of the State of Florida, and ordinances and regulations of the City of St. Pete Beach will apply.

ASSIGNMENT AND TRANSFER OF CONTRACT
The Proposer shall not assign or transfer this Agreement or any part thereof or any interest therein without consent in writing of the City and the Proposer's Surety, and any such assignment or transfer without such written consent shall be null and void.

SUBCONTRACTS
The Proposer shall not subcontract this Agreement or any part thereof or any interest therein without consent in writing of the City and the Proposer's Surety. Any Subcontractor approved by the City will be subject to the same standards and qualifications as stated in this Contract.

PAYMENT
Payment shall be made to the Proposer for work performed under this Contract for the quantities of work as determined in accordance with Payments for Work Completed and Payments Withheld of this Contract. Payment for extra work will be made in accordance with the Changes in Work, Contract Amount, and Contract Time sections below.

PERIOD OF PERFORMANCE
The target completion for the base Scope of Services is January 2027, corresponding to delivery of the Design-Build Readiness Package. The City reserves the right, at its sole discretion and subject to funding

availability, to amend this Agreement to extend the Consultant's services through final (100%) design. Any additional services shall be authorized by written amendment and negotiated in accordance with the Consultants' Competitive Negotiation Act (Section 287.055, Florida Statutes).

CHANGES IN THE WORK

Without invalidating the Contract, the City may, at any time or from time to time, order additions, deletions or revisions in the work authorized by written Change Orders or directives. Upon receipt of a Change Order, the Proposer will proceed with the work involved. All such work shall be executed under the applicable conditions of the Contract documents. If any Change Order causes an increase or decrease in the Contract Amount or any extension or shortening of the Contract Time, an equitable adjustment will be made.

Additional Work performed by the Proposer without authorization of a Change Order will not entitle them to an increase in the Contract Amount or any extension of the Contract Time, except in the case of an emergency (subject to approval by City Manager or designee).

It is the Proposer's responsibility to notify their Surety of any changes affecting the general scope of the Work or change of the Contract Amount and the amount of the applicable bonds shall be adjusted accordingly, and an amended bond document furnished to the City. In the event the City directs the Proposer to make a change in the Work, and if the City and the Proposer do not arrive at a mutually acceptable increase or decrease in the Contract Amount, the Proposer shall not use any such lack of mutual acceptance as a basis or cause to stop or otherwise delay the progress or the execution and completion of any of the work ordered, directed or required pursuant to the Contract Documents.

If the Proposer believes an event or situation has occurred which justifies a change in the Contract Amount or Contract Time, they shall deliver a written notice to the City Manager or designee. Each such written notice shall be delivered promptly and no later than fifteen (15) business days after the Proposer first discovered the occurrence. The Proposer shall be deemed to have waived the right to collect any and all costs incurred more than fifteen (15) business days prior to the date of delivery of the written notice and shall be deemed to have waived the right to seek an extension of the Contract Time with respect to any delay in the Progress Schedule which accrued more than fifteen (15) business days prior to the date of delivery of the written notice.

Any such notice shall include sufficient detail to explain the basis of entitlement to a claim for an adjustment to the Contract Amount of Contract Time. When requested by the City Manager or designee, the Proposer shall furnish any additional information and details as may be required to determine the facts or allegations involved, which shall be provided within fifteen (15) business days of the request unless a longer time period is allowed by the City Manager or designee.

The Proposer shall prepare proposals detailing proposed adjustments to Contract Amount and/or Contract Time and submit them to the City Manager or designee within fifteen (15) business days of the City's issuance of a proposed Change Order or the Proposer's submitting a written notice of a change or claim for an adjustment to the Contract Amount or Contract Time. Proposer's proposals shall be irrevocable for a period of at least sixty (60) business days after receipt by the City. Any delay in the submittal of a complete, adequate and acceptable proposal will not justify an increase in Contract Amount or Contract Time. Proposer agrees that it shall give the City access to any and all of Proposer's and Subcontractors' books, records and other materials relating to proposed Change Orders and other claims for adjustment to Contract Amount or Contract Time.

CHANGE OF CONTRACT AMOUNT

The Contract Amount constitutes the total compensation payable to the Proposer for performing the Work. All duties, responsibilities and obligations assigned to or undertaken by the Proposer shall be at his expense

without change in the Contract Amount. The Contract Amount may only be changed by written Change Order issued by the City. Any claim for an increase in the Contract Amount shall be in writing and delivered to the City Manager or designee within fifteen (15) business days of the occurrence of the event giving rise to the claim.

All claims for adjustment in the Contract Amount shall be determined by the City Manager or designee. However, no claim for an adjustment to the Contract Amount will be considered for unforeseeable causes that were beyond the fault or negligence of the Proposer or his Subcontractors or supplier such as acts of God, floods, riots, etc. This restriction does not restrict submission of claims for additional Contract Time due to events of this nature. Any change in the Contract Amount shall be incorporated in a Change Order.

Proposer proposals or claims shall cover all aspects of the Work involved and shall be fully documented and itemized as to all costs, quantities and charges for overhead and profit. Amounts for Subcontractors or Suppliers at any tier shall be similarly supported. When determining Subcontractors' costs, the methods to be used shall be those used for the Proposer's costs, except that the term "Subcontractor" shall replace the term "Proposer," context permitting.

The value of any Work covered by a Change Order or of any claim for an increase or decrease in the Contract Amount where the Work involved is covered by unit prices contained in the Contract Documents shall be determined by application of unit prices to the quantities of the items involved. If the quantities originally contemplated are so changed in a proposed Change Order, that application of the Unit Prices to the quantities proposed will cause substantial inequity to the City or the Proposer, the applicable unit price(s) shall be equitably adjusted by mutual agreement.

If the value of work covered by a Change Order cannot be established or mutually agreed to utilizing previously established unit rates, the value shall be determined by the City on the basis of an estimate of the out-of-pocket cost and percentages that are acceptable to the City for overhead and profit.

In such case, the Proposer will submit in the form prescribed by the City an itemized cost breakdown together with supporting data.

The amount of credit to be allowed by the Proposer to the City for any such change which results in a net decrease in cost, will be the amount of the actual net decrease as determined by the City. When both additions and credits are involved in any one change, the combined overhead and profit shall be figured on the basis of the net increase, if any.

CHANGE OF CONTRACT TIME

The Contract Time may only be changed by written Change Order. Any claim for an extension in the Contract Time shall be in writing and include an analysis of the Progress Schedule as further described in the Specifications and shall be delivered to the City Manager or designee within fifteen (15) business days of the occurrence of the event giving rise to the claim. All claims for adjustment in the Contract Time shall be determined by the City Manager or designee. Any change in the Contract Time resulting from any such claim shall be incorporated in a Change Order. The Contract Time may be extended for an amount equal to time lost due to unforeseeable causes beyond the control of the Proposer (and his Subcontractors and Suppliers) if he makes a claim therefrom. Such delays shall include, but not be restricted to, acts or neglect by any separate Proposer employed by the City; fires; floods; labor disputes; epidemics; or acts of God.

All time limits stated in the Contract Documents are of the essence to the Contract. The stated time limits are agreed to be adequate to complete the work, including the procurement, manufacture and delivery of all material and equipment required, and account for any and all potential impact, delays, disruptions and costs that may be expected.

PAYMENTS FOR WORK COMPLETED
All payments under this agreement shall comply with the requirements of Florida Statutes, Section 215.422, commonly referred to as the "Prompt Payment Law." This includes timely processing of invoices and adherence to statutory interest provisions for late payments. The Contractor shall submit detailed invoices for services rendered under this agreement. Each invoice must include: Purchase Order or Contract Number, Description of services provided, Dates of service, Total amount due. Payment will be made within 45 days of receipt of a proper invoice and acceptance of deliverables, as required by Florida law. If payment is not made within the statutory timeframe, interest penalties will apply in accordance with Section 215.422, Florida Statutes. Payments will be issued via electronic funds transfer (EFT) unless otherwise agreed in writing. Contractor must provide accurate banking information to facilitate EFT.

PAYMENTS WITHHELD
The City Manager or designee may withhold, or, on account of subsequently discovered evidence, nullify the whole or part of any estimate to such extent as may be necessary to protect the City from loss on account of:

a) Defective work not remedied

b) Claims and/or liens filed or reasonable evidence indicating probable filing of claims

c) Failure of the Proposer to make payments properly to Subcontractors or for labor

d) A reasonable doubt that the Contract can be completed for the balance then unpaid

e) Damage to another Proposer

f) Failure of the Proposer to keep their work progressing in accordance with their time schedule

FINAL PAYMENTS
Upon the completion and acceptance of the work, the City Manager or designee shall issue a certificate that designates that the whole work provided for in this Contract has been completed and accepted by him under the conditions and the terms thereof and shall make the final estimate of the work. After issuance of the certificate, the entire balance found to be due the Proposer, including said retained percentage by the City in accordance with existing state laws as may be retained lawfully by said City, shall pay excepting such sums to the Proposer.

Before the approval of the final payment, the Proposer shall submit evidence satisfactory to the City that states that all payrolls, materials, bills and outstanding indebtedness in connection with this Contract have been paid.

LIENS
If at any time there shall be evidence of any lien or claim for which the City might become liable and which is chargeable to the Proposer, the City shall have the right to retain out of any payment then due or thereafter to become due, an amount sufficient for complete indemnification against such lien or claim. In the event the City has already paid to the Proposer all sums due under this contract or the balance remaining unpaid is insufficient to protect the City, the Proposer and his Surety shall be liable to the City for any loss so sustained.

RESPONSIBILITY OF THE CITY MANAGER OR DESIGNEE
The term "City Manager or designee" wherever used in the Contract shall be the City of St. Pete Beach or its duly authorized representative. Notices of any change in the City Manager or designee shall be given in writing by the City to the Proposer. The City Manager or designee shall have full authority to interpret the Plans and Specifications and shall determine the amount, quality, and acceptance of the work and supplies

to be paid for under the Contract and every question relative to the fulfillment of the terms and provisions therein. It shall be the duty of the City Manager or designee to enforce the Plans and Specifications in a fair and unbiased manner. If a variation from any requirements is allowed the City Manager or designee shall grant the same in writing with the reasons for his action outlined, and such action will not invalidate or change the Contract in any other manner.

LICENSES AND PERMITS

The Proposer shall obtain and pay for all necessary City licenses and work permits and shall faithfully comply with all laws, ordinances and regulations, (Federal, State or local) which may be applicable to the operations to be conducted hereunder, except for those permits obtained by the City. Notwithstanding the provisions above, the Proposer is responsible for non-compliance of all permit requirements, including all fines resulting from Proposer's non-compliance of said requirements.

Chapter II, Section II-4, "Registration of Licenses Obtained From Other Municipalities:" "Persons, partnerships, corporations, or other business entities doing business with the City who are not required to obtain a City occupational license, but who must have either a State or County or Municipal occupational license from another municipality, shall register such occupational license with St. Pete Beach Community Development Department. The City may charge a fee for such registration." The Proposer shall be responsible for obtaining all City, County, State and Federal permits required by those government agencies and must provide documentation of receipt of those permits prior to project commencement. This shall include a notice to commence work letter and the applicable fee, if required. Any sub-contractor hired by the Proposer awarded the project, MUST also register their license with the City.

LABOR PROVISIONS

The Proposer and his Subcontractors shall discharge, whenever ordered to do so by the City Manager or designee, any employee who is disorderly or whose conduct in the opinion of the City Manager or designee is detrimental to the prosecution of the work. No person whose age or physical condition is such as to make this employment dangerous to his/her health and safety or to the health and safety of others shall be employed on the work, and in no event shall any persons under the age of sixteen (16) years be employed. The State of Florida prevailing wage law requires that the Proposer shall fully comply with all provisions contained in Section 215.19, "Schedule of Prevailing Wage Rates for Specified Public Construction." The wage rates set forth by such determination shall apply to this project.

INSURANCE

The Proposer shall procure and maintain at his/her own expense, during the life of the Contract, liability insurance as hereinafter specified. All such insurance shall be subject to the approval of the City for adequacy of protection and shall include a provision preventing cancellation without twenty (20) business days prior notice to the City in writing. The City shall be included as an additional insured on all liability insurance. The liability insurance required is as follows: Proposer's General Public Liability and Property Damage Insurance issued to the Proposer and protecting the Proposer from all claims for personal injury, including death, and all claims for destruction of or damage to property, arising out of or in connection with any operations under this Contract, whether such operations be by the Proposer or by any Subcontractor hired by the Proposer or anyone directly or indirectly employed by the Proposer or hired by the Proposer.

The successful Proposer shall supply and maintain insurance which defends, indemnifies and holds harmless the City of St. Pete Beach, its officers, employees and agents from and against any and all liability, damage claims, demands, costs, judgments, fees, attorney's fees or loss arising directly out of acts or omissions hereunder by the Proposer or third party under the direction or control of the Proposer. Such general and excess liability coverage shall be primary to any other coverage carried by the City of St Pete Beach. Proposer must furnish the City with Certificate of Insurance prior to commencement of work. An

approved Certificate of Insurance furnished by the Proposer's carrier to guarantee the Proposer being insured with the City of St Pete Beach must be named as a certificate holder for this contract. The following minimum coverage:

- Professional Liability Insurance $2,000,000 each occurrence.
- Commercial General Liability Insurance $1,000,000.00.
- Comprehensive General Liability Insurance of $1,000,000.00 each occurrence.
- Personal Injury for $1,000,000.00 each occurrence.
- Automobile Liability $1,000,000.00.
- General Workers Compensation Insurance as required by Florida law.
- Longshore Harbor Workers Compensation Insurance

PROTECTION OF WORK AND PROPERTY
The Proposer shall continuously maintain adequate protection of all their work and materials from damage or theft and shall protect the City's property and all adjacent property from injury or loss arising in connection with activities under their Contract. The Proposer shall make good any such damage, injury, or loss, except such as may be caused by agents or employees of the City.

The Proposer shall take, use, provide, and maintain all necessary precautions, safeguards, and protection to prevent accidents, or injury to persons or property on, about, or adjacent to the site of the work. Should the situation arise that physical security is needed the Proposer will provide security on off days and holidays. The Proposer shall be responsible for all charges incurred with such action.

The Proposer shall post danger signs warning against any hazards created by the work being done under their Contract. They shall designate a responsible member of their organization on the work, whose duty shall be the prevention of accidents, and the name of the person so designated shall be reported to the City Manager or designee and City in writing. In an emergency affecting the safety of life, or of the work or adjoining property, the Proposer, without special instruction or authorization from the City Manager or designee, or City, is hereby permitted to act, at their own discretion, to prevent such threatened loss or injury, and they must take such action if so instructed or authorized by the City Manager or designee. The Proposer shall also protect adjacent property as required by law.

PROPOSAL REVIEW AND CONTRACT AWARD
Failure to submit all documents requested at the time of proposal may deem the Proposer's proposal ineligible for award. The City of St. Pete Beach reserves the right to reject any or all proposals or parts of proposals. The contract shall be awarded by written notice to the responsible and responsive Contractor whose proposal is determined in writing to be the most advantageous to the City, taking into consideration the price and other criteria set forth in this request for proposals. The City may waive any informality.

LOCAL, STATE AND FEDERAL COMPLAINCE REQUIREMENTS
The laws of the State of Florida do apply to any purchase made under this Request for Proposal. Proposers shall comply with all local, state, and federal directives, orders and laws as applicable to their proposal and subsequent contracts include but not limited to Equal Employment Opportunity, Minority Business Enterprise, and OSHA as applicable to this contract.

Compliance with Fla. Stat. 448.095:

- Proposer agrees to comply with all applicable portions of Fla. Stat. 448.095. Proposer must use the

U.S. Department of Homeland Security's E-Verify System, hhtps://e-verify.uscis.gov/emp, to verify the employment eligibility of all employees hired on or after January 1, 2021 during the term of this Agreement.

- Subcontractors (i) Proposer shall also require all subcontractors performing work under this Agreement to use the E-Verify system for any employees they may hire during the term of this Agreement. (ii) Subcontractors shall provide Proposer with an affidavit stating the subcontractor does not employ, contract with, or subcontract with an unauthorized alien, as defined by Fla. Stat. 448.095 (iii) Proposer shall provide a copy of such affidavit to the City upon receipt and shall maintain a copy for the duration of the Agreement.

- Proposer must provide evidence of compliance with Fla. Stat. 448.05 by January 1, 2021. Evidence may consist of, but is not limited to, providing notice of Proposer's E-Verify number.

- Failure to comply with this provision is a material breach of the Agreement, and the City may choose to terminate the Agreement at its sole discretion. Proposer may be liable for all costs associated with the City securing the same services, inclusive, but not limited to, higher costs for the same services and proposal costs (if necessary). Any challenge to termination under this provision must be filed in the Circuit Court no later than 20 calendar days after the date of termination. If this agreement is terminated for a violation of the statute by the Proposer, the Proposer may not be awarded a public agreement for a period of 1 year after date of termination.

RESERVES THE RIGHT

The City reserves the right to accept or reject any and/or all proposals, to waive irregularities and technicalities, and to request re-submission. If only one proposal is received by the proposal date and time listed, the proposal may or may not be rejected by the City depending upon proposal review and the needs of the City.

The City reserves the right to select a firm with or without additional interviews and may decide to select any of the firms submitting proposals. The City reserves the right to award the contract to a responsible proposer submitting a responsible proposal, with a resulting negotiated agreement which is most advantageous and in the best interest of the City.

Proposers, Proposers, their agents, and associates shall not contact or solicit any City Commission member, City employee, or official regarding this RFP during any phase of the proposalding process. Failure to comply with the provision may result in disqualification of the Proposer, at the option of the City. Only that individual listed, or an approved designee, as the contact person for this RFP shall be contacted.

SUBMITTAL WITHDRAWAL

After submittals are opened, corrections or modifications to submittals are not permitted, but a responding firm may be permitted to withdraw an erroneous submittal prior to the award by the City Commission, if the following is established:

- That the responding firm acted in good faith in submitting the submittal;
- That in preparing the submittal there was an error of such magnitude that enforcement of the submittal would work severe hardship upon the respondent;
- That the error was not the result of gross negligence or willful inattention on the part of the respondent;
- That the error was discovered and communicated to the City within twenty-four (24) hours of submittal opening, along with a request for permission to withdraw the submittal; or
- The responding firm submits documentation and an explanation of how the error was made.

CONE OF SILENCE
Respondents to this solicitation or persons acting on their behalf may not contact, between the release of the solicitation and the end of the 72-hour period following the agency posting the notice of intended award, excluding Saturdays, Sundays, and state holidays, any employee or officer of the executive or legislative branch concerning any aspect of this solicitation, except in writing to the procurement officer or as provided in the solicitation documents. Violation of this provision may be grounds for rejecting a response.

TERMINATION
The resulting contract may be canceled by the City when:

- Sufficient funds are not available to continue its full and faithful performance of this contract.
- There is sub-standard or non-performance of contract.
- The City wishes to terminate at any time and for any reason, upon giving thirty (30) days prior written notice to the other party.

The resulting contract may be canceled by either party in the event of substantial failure to perform in accordance with the terms by the other party through no fault of the terminating party.

FISCAL NON-FUNDING

If funds for the requested services described herein are not appropriated via the annual budget adoption process, the City reserves the right to cancel this Agreement immediately upon written notice to the vendor.

PROJECT RECORDS
The awarded firm shall maintain auditable records concerning the procurement to account for all receipts and expenditures, and to document compliance with the Contract. These records shall be kept in accordance with generally accepted accounting methods, and the City of St. Pete Beach reserves the right to determine the record-keeping method in the event of non-conformity. These records shall be maintained for three (3) years after final payment has been made and shall be readily available to City personnel with reasonable notice, and to other persons in accordance with the Florida Public Disclosure Statutes. Additionally, the awarded firm shall abide by and comply with Florida Statutes regarding public records. Specifically, the firm shall be aware of the provisions found in Section 119.0701, Florida Statutes.

Upon completion of the project, all reports, studies, recommendations, forms, and other project specific information will need to be submitted in paper and in an electronic file format (.PDF, .JPEG) on CD or USB storage device.

V. REFERENCES & MINIMUM QUALIFICATIONS

Provide at least three (3) or more professional, business references with which you have contracted to provide similar services in the past five (5) years. Include the name of the person, its organization, telephone number, fax number, and e-mail address. Include any governmental agencies, with the same contact and descriptive information for which you have provided similar service within the past five (5) years.

Provide a brief description of the history and capabilities of the firm. Describe the types of projects or services the firm performs/has performed and the dollar value of each. Provide information regarding your firm's ability to complete this project. Demonstrate that the firm's personnel have experience with similar projects.

Identify all unresolved and ongoing claims and disputes against your firm in excess of $500,000. Include any claims against the principals of your firm or any claims your company may have against a third party. Provide a history of litigation, including the outcomes, for the past five (5) years.

The responding firm shall provide a statement of assurance that the firm is not presently in violations of any statutes or regulatory rules that might have an impact on the firm's operations. All applicable laws and regulations of the State of Florida and ordinances and regulations of the City of St. Pete Beach will apply.

Provide the overall bonding capacity for the company and provide a history of any claims against the Proposer's previous bonds for the past five (5) years.

The City shall be the sole final judge of qualifications of Proposer to perform service and reserves the exclusive right to accept or reject any proposal as it deems to be in the best interests of the City. The City reserves the right to make such investigation, as it deems necessary, to determine the ability of any proposer to perform the work or service requested. Failure to comply with the requirements of this section may be grounds for rejecting a response.

VI. CONTRACTOR'S PROPOSAL SUBMITTAL

The company that is submitting a proposal declares that it has extensive experience in Wastewater System Rehabilitation Services, including manhole rehabilitation, pipe lining and point repairs.

The undersigned, as Proposer, hereby declares that the only person or persons interested in the Proposal as principal or principals are named herein, and that no person other than herein mentioned has any interest in the Proposal or in the Agreement to be entered into; that this Proposal or Agreement is made without connection with any other person, company, or parties making a Proposal; and that it is in all respects fair and in good faith without collusion or fraud.

The Proposer further declares that they have examined the site of the work and informed themselves fully in regard to all conditions pertaining to the place where the work is to be done; that they have examined the Plans and Specifications for the work and Contract Documents relative thereto, and have read all special provisions furnished prior to the opening of proposals; and that they have satisfied themselves relative to the materials to be supplied and work to be performed.

The Proposer proposes and agrees, if the Proposal is accepted, to contract with the City of St. Pete Beach, Florida, in the form of an Agreement specified for **"Wastewater System Rehabilitation Services"** in St. Pete Beach, Florida, in full and complete accordance with the shown, noted, described, and reasonably intended requirements of the Plans, Specifications, and Contract Documents, to the full and entire satisfaction of the City of St. Pete Beach, Florida.

The successful Proposer shall be required to utilize the template Agreement in this Request for Proposals (RFP) and any questions regarding the Agreement must be addressed during the RFP process before submittal. The City reserves the right to respond or not respond to questions in the form of an addendum.

The Proposer proposes to furnish all materials, equipment, labor, and perform the work submitted in their proposal schedule for the City of St. Pete Beach **"Wastewater System Rehabilitation Services."**

COMPANY:_____ DATE: _____

ADDRESS:_____ PHONE:_____

PROPOSER: _____ NAME: _____

(SIGNATURE) (PRINT NAME & TITLE)

STATE OF FLORIDA
COUNTY OF _____

The foregoing instrument was sworn to (or affirmed), subscribed, and acknowledged before me by means of ☐ physical presence or ☐ online notarization, this _____ day of _____, 2026, by_____, who is personally known to me or has produced _____ as identification.

(SEAL)

_____
Notary Public – State of Florida

_____
(Print, Type, Stamp, or Commissioned Name of Notary Public)

SUBMIT PROPOSAL TO: Electronically via Bonfire only

VII. PUBLIC ENTITY CRIMINAL AFFIDAVIT

SWORN STATEMENT – PUBLIC ENTITY CRIMES

PURSUANT TO § 287.133 (3)(a), FLORIDA STATUTES, ON PUBLIC ENTITY CRIMES
THE FORM MUST BE SIGNED AND SWORN TO IN THE PRESENCE OF A NOTARY PUBLIC OR OTHER OFFICIAL AUTHORIZED TO ADMINISTER OATHS.

1. This sworn statement is submitted to: City of St. Pete Beach

   by: _____
   (Print individual's name and title)

   for: _____
   (Print name of entity submitting sworn statement)

   at: _____
   (Business address)

   and (if applicable), its Federal Employer Identification Number (FEIN):

   _____
   (FEIN)
   or, if the entity has no FEIN, include the Social Security Number:

   _____
   (SSN)

   by the individual signing this sworn statement: _____
   (Signature)

2. I understand that a "public entity crime" as defined in § 287.133 (1)(g), Fla. Stat., means a violation of any State or Federal law by a person with respect to and directly related to the transaction of business with any public entity or with an agency or political subdivision of any other state or of the United States including, but not limited to, any proposal or contract for goods or services, any lease for real property, or any contract for the construction or repair of a public building or public work, involving antitrust, fraud, theft, bribery, collusion, racketeering, conspiracy, or material misrepresentation.

3. I understand that "convicted" or "conviction" as defined in § 287.133 (1)(b), Fla. Stat., means a finding of guilt or a conviction of public entity crime with or without an adjudication of guilt in any Federal or State trial court of record relating to charges brought by indictment or information after July 1, 1989, as a result of a jury verdict, non-jury trial, or entry of a plea of guilty or nolo contendere.

4. I understand that an "affiliate" as defined in § 287.133 (1)(a), Fla. Stat., means:
   a. A predecessor or successor of a person convicted of a public entity crime or
   b. An entity under the control of any natural person who is active in the management of the entity and who has been convicted of a public entity crime. The term "affiliate" includes those officers, directors, executives, partners, shareholders, employees, members, and agents who are active in the management of an affiliate. The ownership by one (1) person of shares constituting a controlling interest in another person or a pooling of equipment or income among persons when not for fair market value under the arm's length agreement, shall be a prima facie case that one (1) person controls another person. A person who knowingly enters into a joint venture with a person who has been convicted of a public crime in Florida during the preceding thirty-six (36) months shall be considered an

affiliate.

5. I understand that a "person" as defined in Section 287.133 (1)(e), Fla. Stat., means any natural person or any entity organized under the laws of any state or of the United States with the legal power to enter into a binding contract and which proposals or applies to proposal on contracts let by a public entity, or which otherwise transacts or applies to transact business with a public entity. The term "person" includes those officers, directors, executives, partners, shareholders, employees, members, and agents who are active in management of an entity.

6. Based on information and belief, the **statement which I have marked below is true** in relation to the entity submitting this sworn statement (indicate which statement applies).

☐ Neither the entity submitting this sworn statement, nor any of its officers, directors, executives, partners, shareholders, employees, members, or agents who are active in the management of the entity nor any affiliate of the entity has been charged with and convicted of a public entity crime subsequent to July 1, 1989.

☐The entity submitting this sworn statement or one (1) or more of its officers, directors, executives, partners, shareholders, employees, members, or agents who are active in the management of the entity or an affiliate of the entity has been charged with and convicted of a public entity crime subsequent to July 1, 1989.

☐The entity submitting this sworn statement or one (1) or more of its officers, directors, executives, partners, shareholders, employees, members, or agents who are active in the management of the entity or an affiliate of the entity has been charged with and convicted of a public entity crime subsequent to July 1, 1989. However, there has been a subsequent proceeding before a Hearing Office of the State of Florida, Division of Administrative Hearings and the Final Order entered by the Hearing Officer determined that it was not in the public interest to place the entity submitting this sworn statement on the convicted vendor list (attach a copy of the final order).

I UNDERSTAND THAT THE SUBMISSION OF THIS FORM TO THE CONTRACTING OFFICE FOR THE PUBLIC ENTITY IDENTIFIED IN PARAGRAPH 1 ABOVE IS FOR THE PUBLIC ENTITY ONLY AND THAT THIS FORM IS VALID THROUGH DECEMBER 31 OF THE CALENDAR YEAR IN WHICH IT IS FILED. I ALSO UNDERSTAND THAT I AM REQUIRED TO INFORM THE PUBLIC ENTITY PRIOR TO ENTERING INTO A CONTRACT IN EXCESS OF THE THRESHOLD AMOUNT PROVIDED IN SECTION 287.017, FLORIDA STATUTES, FOR CATEGORY TWO OF ANY CHANGE IN THE INFORMATION CONTAINED IN THIS FORM.

STATE OF FLORIDA
COUNTY OF _____

The foregoing instrument was sworn to (or affirmed), subscribed, and acknowledged before me by means of ☐ physical presence or ☐ online notarization, this _____ day of _____, 2026, by_____, who is personally known to me or has produced _____ as identification.

(SEAL)

_____
Notary Public – State of Florida

_____
(Print, Type, Stamp, or Commissioned
Name of Notary Public)

VIII. NON-COLLUSION AFFADAVIT

STATE OF _____ COUNTY OF _____

I state that **I**_____of_____,
(Name and Title) (Name of Firm)

I am authorized to make this affidavit on behalf of my firm and its owner, directors and officers. I am the person responsible in my firm for the price(s) and amount(s) of this Response, and the preparation of the Response. I state that:

1. The price(s) and amount(s) of this Response have been arrived at independently and without consultation, communication or agreement with any other Provider, potential provider, Proposal, or potential Proposal.
2. Neither the price(s) nor the amount(s) of this Response, and neither the approximate price(s) nor approximate amount(s) of this Response, have been disclosed to any other firm or person who is a Provider, potential Provider, Proposal, or potential Proposal, and they will not be disclosed before Proposal opening.
3. No attempt has been made or will be made to induce any firm or persons to refrain from submitting a Response for this contract, or to submit a price(s) higher that the prices in this Response, or to submit any intentionally high or noncompetitive price(s) or other form of complementary Response.
4. The Response of my firm is made in good faith and not pursuant to any agreement or discussion with, or inducement from, any firm or person to submit a complementary or other noncompetitive Response.
5. _____, its affiliates, subsidiaries, officers, director, and employees (Name of Firm) are not currently under investigation, by any governmental agency and have not in the last three years been convicted or found liable for any act prohibited by State or Federal law in any jurisdiction, involving conspiracy or collusion with respect to Proposal, on any public contract, except as follows:

I state that I and the named firm understand and acknowledge that the above representations are material and important, and will be relied on by the State of Florida for which this Response is submitted. I understand and my firm understands that any misstatement in this affidavit is, and shall be treated as, fraudulent concealment from the State of Florida of the true facts relating to the submission of responses for this contract.

Name of Organization:_____Signed By: _____

Print Name:_____

The foregoing instrument was sworn to (or affirmed), subscribed, and acknowledged before me by means of ☐ physical presence or ☐ online notarization, this _____ day of _____, 2026, by _____, who is personally known to me or has produced _____ as identification.

(SEAL)

_____
Notary Public – State of Florida

_____
(Print, Type, Stamp, or Commissioned
Name of Notary Public)

CONTRACT DOCUMENTS

TECHNICAL SPECIFICATIONS

FOR

St. Pete Beach
The Sunset Capital of Florida
PUBLIC SERVICES

CITY OF ST. PETE BEACH

SOLICITATION NAME:

Wastewater System Rehabilitation Services

MANHOLE REHABILITATION

PIPE LINING

POINT REPAIRS

TABLE OF CONTENTS

SECTION 1 – GENERAL

1.01 LOCATION OF THE WORK SITE AND ACCESS

1.02 SCOPE OF WORK

1.03 PROJECT SUMMARY

1.04 CONTRACT DRAWINGS AND SPECIFICATIONS

1.05 FIELD ENGINEERING

1.06 SAFEGUARDING SURVEY MARKS

1.07 INSPECTION AUTHORITY

1.08 PROJECT SCHEDULE

1.09 MATERIALS AND EQUIPMENT

1.10 MANUFACTURER

1.11 SAMPLES

1.12 EQUIVALENT QUALITY

1.13 MATERIAL AND EQUIPMENT DELIVERY AND STORAGE

1.14 SERVICE OF MANUFACTURER'S REPRESENTATIVE

1.15 CONTAMINANTS CONTAINMENT/DISPOSITION

1.16 PREVENTION, CONTROL, AND ABATEMENT OF EROSION AND WATER POLLUTION

1.17 MAINTENANCE OF STORM DRAINAGE SYSTEM

1.18 SPILL OR DISCHARGE OF WASTEWATER OR RECLAIMED WATER

1.19 SEQUENCE OF OPERATION

1.20 WORK IN STREETS AND HIGHWAYS

1.21 WORK IN PRIVATE PROPERTY

1.22 PERMITS

1.23 FIELD OFFICE AND APPURTENANT STRUCTURES

1.24 CONTRACTOR'S SIGN

1.25 MOBILIZATION

1.26 WATER PURCHASE

1.27 TRAFFIC CONTROL

1.28 TREE PROTECTION

1.29 TREE REMOVAL AND REPLACEMENT

1.30 UTILITIES

1.31 NEIGHBORHOOD NOTIFICATION

1.32 SHOP, FIELD, AND LABORATORY TESTING

1.33 SALVAGED MATERIALS

SECTION 2 – PAY ITEM DESCRIPTIONS

2.01 SCOPE

2.02 ESTIMATED QUANTITIES

2.03 WORK OUTSIDE AUTHORIZED LIMITS

2.04 MEASUREMENT STANDARDS

2.05 AREA MEASUREMENTS

2.06 LUMP SUM ITEMS

2.07 PAY ITEM DESCRIPTIONS

WASTEWATER SYSTEM MANHOLE REHABILITATION
WASTEWATER SYSTEM PIPE LINING
WASTEWATER SYSTEM POINT REPAIRS

SECTION 3 – SUBMITTALS

3.01 GENERAL

3.02 CONTRACTOR RESPONSIBILITIES

3.03 SUBMITTAL NUMBERING

3.04 SUBMITTAL REVIEW

SECTION 4 – AS BUILTS

4.01 MINIMUM AS-BUILT DRAWING STANDARDS FOR ALL AS-BUILT DRAWINGS

4.02 AS-BUILT DRAWINGS PREPARATION

4.03 AS-BUILT DRAWINGS SUBMITTAL

SECTION 5 – CONCRETE, MASONRY, AND REINFORCING STEEL

5.01 GENERAL

5.02 PORTLAND CEMENT CONCRETE

5.03 REINFORCING STEEL

5.04 FIBROUS CONCRETE REINFORCEMENT

5.05 PLACEMENT OF REINFORCEMENT

5.06 PLACEMENT OF CONCRETE

5.07 CURING OF CONCRETE

5.08 FINISHING OF CONCRETE

5.09 CONCRETE BRICK

5.10 CLAY BRICK

5.11 MASONRY BLOCK

5.12 MORTAR

5.13 GROUT

SECTION 6 – EXCAVATION AND BACKFILL

6.01 GENERAL

6.02 TRENCH SAFETY

6.03 WORK IN WETLANDS, MANGROVES, AND PRESERVATION AREAS

6.04 CLEARING AND GRUBBING

6.05 ROADWAY EXCAVATION

6.06 TRENCH EXCAVATION

6.07 STRUCTURE EXCAVATION

6.08 EXCAVATION OF UNSUITABLE MATERIAL

6.09 SHEETING, SHIELDING, AND SLOPING

6.10 DEWATERING

6.11 BORROW MATERIAL

6.12 BEDDING MATERIAL

6.13 STRUCTURAL SLAB BEDDING

6.14 BACKFILL MATERIAL

6.15 BACKFILL COMPACTION

6.16 BACKFILLING OF TRENCH

6.17 BACKFILLING STRUCTURES

6.18 BACKFILLING UNDER ROADWAYS

6.19 DISPOSING OF LEFTOVER MATERIAL

6.20 ADJACENT FACILITIES

6.21 TEMPORARY SUPPORTS

6.22 FLOWABLE FILL

SECTION 7 – SURFACE RESTORATION

7.01 GENERAL

7.02 ROADWAY RESTORATION

7.03 TEMPORARY PAVEMENT

7.04 SHELL BASE

7.05 LIMEROCK BASE

7.06 CRUSHED (RECLAIMED) CONCRETE BASE

7.07 ASPHALTIC CONCRETE PAVEMENT

7.08 BRICK PAVEMENT

7.09 CURB AND GUTTER

7.10 CONCRETE SIDEWALK

7.11 HEXAGON BLOCK SIDEWALK

7.12 DRIVEWAY AND PARKING LOT

7.13 DRIVEWAY - ASPHALT

7.14 DRIVEWAY - CONCRETE

7.15 DRIVEWAY - PEAGRAVEL

7.16 DRIVEWAY - SHELL

7.17 GRASS

7.18 EXPANSION JOINT MATERIAL

SECTION 8 – PAINTING

8.01 GENERAL

8.02 SUBMITTALS

8.03 PAINTING SCHEDULES AND SYSTEMS

8.04 EXECUTION

SECTION 9 – PIPING MATERIALS: DUCTILE IRON PIPE AND FITTINGS

9.01 GENERAL

9.02 PIPE

9.03 FITTINGS

9.04 JOINTS – BURIED PIPE AND FITTINGS

9.05 JOINTS – EXPOSED PIPE AND FITTINGS

9.06 DETECTION

9.07 ZINC/EPOXY/FLUOROPOLYMER PROTECTIVE COATING

SECTION 10 – PIPING MATERIALS: PVC PRESSURE PIPE

10.01 GENERAL

10.02 PIPE

10.03 FITTINGS

10.04 JOINTS

10.05 DETECTION

10.06 MARKINGS AND COLOR CODING

10.07 HARNESSING

10.08 INSPECTION AND TESTING

SECTION 11 – PIPING MATERIALS: HDPE PRESSURE PIPE

11.01 SCOPE OF WORK

11.02 QUALIFICATIONS

11.03 POLYETHYLENE PRESSURE PIPE

11.04 JOINTS

11.05 DETECTION

11.06 IDENTIFICATION

11.07 INSTALLING POLYETHYLENE PRESSURE PIPE AND FITTINGS

11.08 INSPECTION AND TESTING

SECTION 12 – PRESSURE PIPE CONSTRUCTION

12.01 GENERAL

12.02 DATA TO BE SUBMITTED

12.03 MATERIALS

12.04 CONNECTIONS TO EXISTING MAINS

12.05 CONSTRUCTION OPERATIONS

12.06 LAYING AND JOINTING PRESSURE PIPELINES

12.07 PIPELINE CLEANING

12.08 TESTING AND DISINFECTION OF PRESSURE PIPELINES

12.09 SURFACE RESTORATION AND MISCELLANEOUS

SECTION 13 – DIRECTIONAL BORING OF PIPE

13.01 GENERAL

13.02 TESTING

13.03 QUALIFICATIONS

13.04 SUBMITTALS

13.05 MATERIALS

13.06 SITE CONDITIONS

13.07 DAMAGE RESTORATION & REMEDIATION

13.08 QUALIFICATIONS FOR REJECTION OF DIRECTIONAL BORE

13.09 PRODUCT LOCATING AND TRACKING

13.10 PRODUCT BORE HOLE DIAMETER

13.11 EQUIPMENT REQUIREMENTS

13.12 THRUST / PULLBACK REQUIREMENTS

13.13 INSTALLATION PROCESS

13.14 PIPELINE TESTING

SECTION 14 – JACKING AND BORING

14.01 SCOPE OF WORK

14.02 OPERATIONS ON THE CITY OF ST. PETE BEACH OR STATE OF FLORIDA PROPERTY

14.03 SHOP DRAWINGS

14.04 SUBMITTALS

14.05 CASING PIPE

14.06 CARRIER PIPE

14.07 CASING SPACERS

14.08 TUNNEL LINER PLATES

14.09 CASING END SEALS

14.10 CONSTRUCTION

14.11 INSTALLING CARRIER PIPE IN CASING PIPE

14.12 TESTING

SECTION 15 – FLUSHING, TESTING, AND DISINFECTION

15.01 WORK INCLUDED

15.02 REFERENCES

15.03 SUBMITTALS

15.04 QUALITY ASSURANCE

15.05 REGULATORY REQUIREMENTS

15.06 DISINFECTION CHEMICALS

15.07 FLUSHING AND PRESSURE TESTING – PIPING

15.08 DISINFECTION FOR WATER MAIN INSTALLATION

15.09 BACTERIOLOGICAL SAMPLING FOR WATER MAIN INSTALLATION

15.10 QUALITY CONTROL

15.11 CONNECTIONS TO EXISTING MAINS

SECTION 16 – SANITARY SEWER BYPASS PUMPING

16.01 SCOPE OF WORK

16.02 PUBLIC IMPACTS

16.03 SUBMITTALS

16.04 EQUIPMENT

16.05 SITE CONDITIONS

16.06 ON-SITE MONITORING

16.07 OPERATIONS

16.08 DAMAGE RESTORATION & REMEDIATION

SECTION 17 – VALVES AND APPURTENANCES

17.01 GENERAL

17.02 TOOLS

17.03 GATE VALVES

17.04 PRESSURE SUSTAINING AND CHECK VALVE

17.05 BALL VALVES FOR PVC PIPE

17.06 BUTTERFLY VALVES

17.07 PLUG VALVES

17.08 VALVE ACTUATORS

17.09 AIR RELEASE VALVES

17.10 VALVE BOXES

17.11 CORPORATION COCKS

17.12 FLANGE ADAPTER COUPLINGS

17.13 FLEXIBLE COUPLINGS

17.14 HOSE BIBS

17.15 SLOW CLOSING AIR AND VACUUM VALVES

17.16 SURGE ANTICIPATOR VALVES

17.17 CHECK VALVES

17.18 HYDRANTS

17.19 RESTRAINING CLAMPS

17.20 TAPPING SLEEVES AND GATE VALVES

17.21 SINGLE ACTING ALTITUDE VALVES

17.22 INSTALLATION

17.23 HYDRANT INSTALLATION

17.24 SHOP PAINTING

17.25 FIELD PAINTING

17.26 INSPECTION AND TESTING

SECTION 18 – SANITARY SEWER CONSTRUCTION

18.01 GENERAL

18.02 DATA TO BE SUBMITTED

18.03 MATERIALS

18.04 CONNECTIONS TO EXISTING SANITARY SEWERS

18.05 CONSTRUCTION OPERATIONS

18.06 MANHOLE CONSTRUCTION

18.07 LAYING AND JOINTING PIPELINES

18.08 TESTING OF SEWER PIPELINES

18.09 SANITARY SEWER PIPE REPAIRS

SECTION 19 – CEMENTITIOUS REHABILITATION – NOT APPLICABLE

SECTION 20 – CCTV INSPECTION AND PIPE CLEANING

20.01 SCOPE OF SERVICES AND WORK PHASING FOR SYSTEM CCTV INSPECTION AND PIPE CLEANING

20.02 COMPLIANCE AND ACCEPTANCE

20.03 CLEANING EQUIPMENT

20.04 REFERENCES DOCUMENTS

20.05 GENERAL EXECUTION

20.06 SUBMITTALS

20.07 OWNER RIGHTS

20.08 EMERGENCY RESPONSE

20.09 SEQUENCE OF INSPECTION AND CLEANING

SECTION 21 – CURED-IN-PLACE PIPE LINER (CIPP)

21.01 GENERAL

21.02 REFERENCE DOCUMENTS

21.03 QUALIFICATION REQUIREMENTS

21.04 SUBMITTALS

21.05 MATERIALS

21.06 STRUCTURAL REQUIREMENTS

21.07 INSTALLATION

21.08 CIPP MAIN LINER TERMINATION AND CONNECTION IN MANHOLES

21.09 SERVICE RECONNECTION

21.10 INSTALLATION RESPONSIBILITIES FOR INCIDENTAL ITEMS

21.11 QUALITY ASSURANCE PROCEDURES

SECTION 22 – PRECAST POLYMER CONCRETE STRUCTURES – NOT APPLICABLE

SECTION 23 – FIBERGLASS WET WELL OR MANHOLE LINER

23.01 GENERAL

23.02 MATERIALS

23.03 WET WELL FABRICATION

23.04 FRP MANHOLE LINER DESIGN

23.05 PHYSICAL REQUIREMENTS

23.06 TEST METHODS

23.07 INSTALLATION

23.08 SHIPPING AND HANDLING

SECTION 24 – SUBMERSIBLE SEWAGE PUMPS – NOT APPLICABLE

SECTION 25 – PUMP STATION CONTROLS – NOT APPLICABLE TO

SECTION 26 – ELECTRICAL – NOT APPLICABLE

SECTION 27 – VARIABLE FREQUENCY DRIVES – NOT APPLICABLE

SECTION 28 – ODOR CONTROL SYSTEMS – NOT APPLICABLE

SECTION 29 – PRECAST CONCRETE BUILDING – NOT APPLICABLE

SECTION 30 – DIESEL DRIVEN GENERATOR WITH WEATHERPROOF ENCLOSURE – NOT APPLICABLE

SECTION 31 – MISCELLANEOUS EQUIPMENT – NOT APPLICABLE

SECTION 32 – STATE REVOLVING FUND (SRF) REQUIREMENTS – NOT APPLICABLE

SECTION 33 – FRAC-OUT PLAN FOR SUBAQUEOUS CROSSINGS

33.01 GENERAL

33.02 BEST MANAGEMENT PRACTICES (BMPs)

33.03 FRAC-OUT PLAN

33.04 RELEASE PROCEDURE

33.05 DRILLING MUD CONTAINMENT PLAN

SECTION 34 – MANHOLE INSPECTION

34.01 SCOPE OF SERVICES AND WORK PHASING

34.02 REQUIREMENTS

34.03 QUALITY ASSURANCE

34.04 SHOP DRAWINGS AND SUBMITTALS

34.05 NOTIFICATION

34.06 EXECUTION

34.07 MANDATORY INSPECTION HEADER INFORMATION

34.08 MANHOLE COMPONENT OBSERVATIONS

34.09 MANHOLE INTERIOR INSPECTION

34.10 CONNECTING PIPE DETAILS

34.11 MANHOLE SKETCH, MAP, UPDATE, AND NOTES

34.12 NOTIFICATION OF EMERGENCY CONDITIONS

34.13 COMPLETION

34.14 PHOTOGRAPH REQUIREMENTS

34.15 MANHOLE NUMBERING, FORMS, AND DEFECT CODES

34.16 SITE RESTORATION

34.17 DELIVERABLES

SECTION 35 – CHEMICAL SEALING OF HOST PIPE AND SERVICE CONNECTIONS

35.01 GENERAL

35.02 PRODUCTS

35.03 SUBMITTALS

35.04 EQUIPMENT

35.05 EXECUTION

SECTION 36 – REMOVAL OF PROTRUDING SERVICE CONNECTIONS

36.01 GENERAL

36.02 PRODUCTS

36.03 EXECUTION

SECTION 37 – WASTEWATER STRUCTURE REHABILITATION

37.01 GENERAL

37.02 GOVERNING STANDARDS

37.03 DEFINITIONS

37.04 QUALIFICATIONS

37.05 SUBMITTALS

37.06 QUALITY ASSURANCE/ QUALITY CONTROL

37.07 CONTAINMENT AND SITE CONDITIONS

37.08 WARRANTY

37.09 MATERIALS

37.10 REPAIR & PREPARATION

37.11 COATING MATERIAL APPLICATION

37.12 COATING SYSTEM SPECIFICATION SHEETS

END OF SECTION

THIS PAGE INTENTIONALLY LEFT BLANK

SECTION 1 - GENERAL

1.01 LOCATION OF THE WORK SITE AND ACCESS

Access to the work sites shall be over streets and walkways. Any damage to existing pavement surface and base or other surface improvements outside the Contract Pay Limits, attributable to the Contractor's activities, shall be restored to like-new condition by the Contractor at the Contractor's expense.

The proposed work will be located within the City of St. Pete Beach in Pinellas County, FL, throughout the entire wastewater collection and transmission system. Each asset to be rehabilitated and the type of rehabilitation required will be identified in each individual Work Order with the location shown on corresponding geographical exhibits.

1.02 SCOPE OF WORK

The Contractor shall furnish all labor, superintendence, materials, power, light, heat, fuel, water, tools, appliances, equipment, supplies, shop drawings, working drawings and other means of construction necessary or proper for performing and completing the work. The Contractor is responsible for obtaining all required permits necessary for the work, including all applications and review fees, other than those permits which may have already been obtained. The Contractor shall perform and complete the work in a speedy and efficient manner consistent with safety of life and property and to the city’s satisfaction, and in strict accordance with the Contract Documents. The Contractor shall repair or restore all structures and property damaged or disturbed during performance of the work.

The cost of incidental work described in this General Section, for which there are no specific Contract Items, shall be considered as part of the general cost of doing the work and shall be included in the prices for the various Contract Items. No additional payment will be made.

The Contractor shall be solely responsible for the means and methods of construction and the adequacy of his workmanship, materials, and equipment.

1.03 PROJECT SUMMARY

Wastewater System Manhole Rehabilitation (Manhole Project)

The Contractor shall furnish all labor, material, equipment, and services necessary for manhole rehabilitation. The work shall be completed at various locations through the City’s wastewater service area and shall include, but is not limited to, maintenance of traffic, temporary by-pass pumping and/or diversion of wastewater, cleaning, removal and disposal of all sand, rubble, deposits, and other accumulated debris, re-building manhole bench and channels, ring (frame) and cover adjustment and replacement, pavement restoration, inflow/infiltration elimination, surface preparation, cementitious and polymer coatings installation, internal chimney sealing, manhole cover insert installation, testing, project site cleanup and restoration, and all other incidentals as required and directed by the Engineer to complete the work.

Wastewater System Pipe Lining (Lining Project)

The Contractor shall furnish all labor, material, equipment, and services necessary for wastewater pipe rehabilitation using Cured-In-Place-Pipe (CIPP) lining. The work shall be completed at various locations through the City's wastewater service area and shall include, but is not limited to, maintenance of traffic, temporary by-pass pumping and/or diversion of wastewater, cleaning, removal and disposal of all sand, rubble, deposits, and other accumulated debris, CIPP liner installation, reconnection of service laterals, testing of CIPP liners, project site cleanup and restoration, and all other incidentals as required and directed by the Engineer to complete the work.

Wastewater System Point Repairs (Point Repair Project)

The Contractor shall furnish all labor, material, equipment, and services necessary for wastewater point repairs. The work shall be completed at various locations throughout the City's wastewater service area and shall include, but is not limited to, maintenance of traffic, temporary by-pass pumping and/or diversion of wastewater, dewatering, directional drilling, jack and boring, remove unsuitable materials below trench grade, sanitary sewer gravity and force main installation, force main and gravity main connections, remove out of service gravity and force mains, install manhole connections, grout out of service pipe, install valves and associated appurtenances, project site cleanup and restoration, and all other incidentals as required and directed by the Engineer to complete the work.

1.04 CONTRACT DRAWINGS AND SPECIFICATIONS

Where the Contract Drawings and Specifications are not in agreement, the Contract Drawings shall govern. The Contractor shall furnish all labor, equipment, and materials to construct the Project and all miscellaneous and appurtenant work complete in place as specifically described and included under said each Contract Pay Item as shown, specified, or directed by the Engineer in accordance with the obvious or expressed intent of the Contract.

The Technical Specifications for the Project that reference FDOT-SSRBC (Florida Department of Transportation - Standard Specifications for Road and Bridge Construction) pertain to the most recent edition at the date of issuance of these Specifications.

1.04.01 COPIES FURNISHED TO CONTRACTOR

The Contractor shall furnish each of the subcontractors, manufacturers, and material men such copies of the Contract Documents as may be required for their work. Additional copies of the Contract Drawings and Specifications, when requested, may be furnished to the Contractor at cost of reproduction.

1.04.02 SUPPLEMNTARY DRAWINGS

When, in the opinion of the City, it becomes necessary to explain more fully the work to be done or to illustrate the work further or to show any changes which may be required, drawings known as Supplementary Drawings, with specifications pertaining thereto, will be prepared by the Engineer and the City and provided to the Contractor.

1.04.03 CONTRACTOR TO CHECK CONTRACT DRAWINGS AND DATA

The Contractor shall verify all dimensions, quantities and details shown on the Contract Drawings, Supplementary Drawings, Schedules, Specifications or other data received from the City or the Engineer and shall notify the City and Engineer of all errors, omissions, conflicts, and discrepancies found therein. Failure to discover or correct errors, conflicts or discrepancies shall not relieve the Contractor of full responsibility for unsatisfactory work, faulty construction or improper operation resulting therefrom nor from rectifying such conditions at the Contractor's own expense. The Contractor shall assume all responsibility for the making of estimates of the size, kind, and quality of materials and equipment included in work to be done under the Contract with approval by the City.

1.05 FIELD ENGINEERING

The Contractor shall establish and provide all vertical and horizontal control points for this Project including benchmarks. The Contractor shall provide the field layout surveying necessary to properly construct the work as indicated on the Contract Drawings.

All field layout surveying shall be performed under the supervision of a Professional Land Surveyor (Chapter 472, Florida Statutes). The Contractor shall submit the name and registration number of Surveyor as directed by the Engineer. The Engineer reserves the right to check all survey staking and to require adjustments or re-staking by the Contractor in the event that conflicts, or errors are detected.

Water pressure pipelines that are 8-inch or less diameter shall be installed with the required cover using horizontal control stakes provided by the Contractor. Sanitary sewer and sanitary pressure pipelines greater than 8-inch diameter shall be installed using an approved method for line and grade control. Methods for line and grade control shall be submitted to the Engineer for review and acceptance, as specified for shop drawings. Sketches shall be provided by the Contractor showing vertical adjustment necessary for pressure pipelines to adequately clear storm drains and other utilities.

1.06 SAFEGUARDING SURVEY MARKS

The Contractor shall safeguard all existing property monuments, benchmarks, and other survey marks adjacent to and within the Project limits and shall bear the cost of re-establishing them if disturbed or destroyed.

1.07 INSPECTION AUTHORITY

The City or Engineer has ultimate responsibility for contract administration and inspection for this Project. The City or Engineer may assign field inspection responsibilities to a Design Professional and/or City Inspector. Each step of construction is subject to review and acceptance by the City or Engineer prior to proceeding with a subsequent step.

During the progress of the Work and up to the date of final acceptance, the Contractor shall at all times afford representatives of the City, the County, the State, the Department of Environmental

Protection, the Department of Transportation, the Department of Labor, or any other agency with jurisdiction, every reasonable, safe, and proper facility for observation of the work done or being done at the site, and also the manufacture or preparation of materials and equipment at the place of such manufacture or preparation.

The Project line of authority will be presented at the Preconstruction Conference.

1.08 PROJECT SCHEDULE

The Contractor shall submit an electronic version in PDF form within 30 days following the Preconstruction Conference of each Work Order.

Scheduling and progress reporting shall be accomplished using a bar chart to provide a clear and concise comparison of progress.

1.09 MATERIALS AND EQUIPMENT

All materials, appliances, and types of construction shall be in accordance with the Technical Specifications and shall, in no event, be less than that necessary to conform to the requirements of any applicable laws, ordinances, and codes.

All materials and equipment to be incorporated into the Work shall be new, unused, and correctly designed. They shall be of standard first grade quality, produced by expert workmen, and be intended for the use for which they are offered. Materials or equipment which, in the opinion of the Engineer, are inferior or of a lower grade than indicated, specified, or required, will not be accepted.

Projects funded by the State Revolving Fund must comply with the requirements of the American Iron and Steel Requirement unless otherwise specified in the Contract Documents and approved by the Engineer.

1.10 MANUFACTURER

The names of proposed manufacturers, manufacturers' representatives, suppliers, and dealers who are to furnish materials, equipment, or other fittings, shall be submitted by the Contractor to the Engineer for review and acceptance. Such acceptance must be obtained before Shop Drawings will be accepted for review. All transactions with the manufacturer and subcontractors shall be through the Contractor.
Any two or more pieces of material or equipment of the same kind, type, or classification and being used for identical types of service, shall be made by the same manufacturer.

Projects funded by the State Revolving Fund must comply with the requirements of the American Iron and Steel Requirement unless otherwise specified in the Contract Documents and approved by the Engineer.

1.11 SAMPLES

The Contractor shall, when required, submit to the Engineer for review and acceptance, typical samples of material and appliances. The samples shall be properly identified by tags and shall be

submitted sufficiently in advance of the time when they are to be incorporated into the Work so that rejections thereof will not cause delay. A letter of transmittal from the Contractor requesting approval shall accompany all such samples.

1.12 EQUIVALENT QUALITY

In the Contract Documents, whenever an article, material, apparatus, equipment, or process is called for by trade name or by name of a patentee, manufacturer, or dealer, or by reference to catalog of a manufacturer or dealer, it shall be understood as intending to mean and specify the article, material, apparatus, equipment, or process designated, or any equal thereto in quality, finish, design, efficiency, and durability, and equally serviceable for the purposes for which it is intended.

Whenever material or equipment is submitted for review as being equal to that specified, the submittal shall include sufficient information and data to demonstrate that the material or equipment conforms to the Contract requirements. The decision as to whether such material or equipment is equal to that specified shall be made by the Engineer.

Upon rejection of any material or equipment submitted as the equivalent of that specifically named in the Contract, the Contractor shall immediately proceed to furnish the designated material or equipment.

Neither the acceptance by the Engineer of alternate material or equipment as being equivalent to that specified, nor the furnishing of the material or equipment specified, shall in any way relieve the Contractor of responsibility for failure of the material or equipment, due to faulty design, material, or workmanship, to perform the functions required of them by the Contract Documents.

1.13 MATERIAL AND EQUIPMENT DELIVERY AND STORAGE

The Contractor shall deliver materials in ample quantities to ensure the most speedy and uninterrupted progress of the work to complete the work within the allotted time. The Contractor shall also coordinate deliveries to avoid delay in, or impediment of, the progress of the work of any related contractor. The Contractor shall provide space for storage of materials and equipment.

Pipe strung along roads and rights-of-way shall be placed in a manner that will not endanger or restrict pedestrian or vehicular traffic. Pipe strings shall not be allowed outside right-of-way limits.

1.14 SERVICE OF MANUFACTURER'S REPRESENTATIVE

The Contract amount shall include but is not limited to the cost of furnishing a competent and experienced representative of the equipment manufacturer who shall assist the Contractor, when required, to install, adjust, test, and place in operation the equipment in conformity with the Contract Documents. After the equipment is placed in operation, the representative shall make all adjustments and tests required by the Engineer to prove that the installed equipment is in proper and satisfactory operating condition. The representative shall instruct personnel as may be designated by the Engineer in the proper operation and maintenance of such equipment.

1.15 CONTAMINANTS CONTAINMENT/DISPOSITION

Prior to the installation of well points for dewatering, the Contractor shall visually inspect the work area for indications of existing ground water monitoring, wells, or metal caps at grade. The Contractor shall review the work area for monitoring wells or abandoned fuel tanks and shall notify the Engineer in writing if any of the above items exist.

During dewatering activities, contractor to test water for contaminants before discharge. If the water is odorous, contaminated, or discolored (excluding tannic acid or iron), the Contractor shall stop the dewatering activities and shall notify the Engineer in writing of such, and request direction.

When work activities encounter or expose any abnormal condition that may indicate the existence of a hazardous or toxic waste, work activities shall stop in the vicinity of the abnormal condition and the Contractor shall notify the Engineer immediately. The presence of tanks or barrels; discolored earth, metal, wood, or groundwater; visible fumes; abnormal odors; excessively hot earth; smoke; or other conditions that appear abnormal, may be signs of hazardous or toxic wastes and shall be treated with extraordinary caution.

Every effort shall be made by the Contractor to minimize the spread of any hazardous or toxic waste into uncontaminated areas.

The Contractor's operations shall not resume until directed in writing by the Engineer.

Disposition of the hazardous or toxic waste will be made in accordance with the requirements and regulations of any City, County, State, or Federal agency having jurisdiction.

1.16 PREVENTION, CONTROL, AND ABATEMENT OF EROSION AND WATER POLLUTION

The Contractor shall be responsible for prevention, control, and abatement of erosion, siltation, and water pollution resulting from construction of the Project until final acceptance of the Project.

The Contractor shall implement all appropriate turbidity management practices at the point of discharge into a storm sewer, gutter, or other conveyance to ensure that state water quality standards are not violated at the point where the storm drain, gutter, or other conveyance discharges into a surface water.

All necessary provisions shall be taken to ensure compliance with the water quality standards of the State of Florida. Attention is called to Chapter 62-302, Florida Administrative Code, and in particular, the requirements that turbidity shall not exceed 29 NTUs above background level. Adequate silt containment procedures and equipment shall be used to control turbidity, at no additional cost to the City.

1.17 MAINTENANCE OF STORM DRAINAGE SYSTEM

The Contractor shall be responsible at all times to maintain the operation of existing stormwater facilities, or, when existing stormwater facilities are removed, to provide equivalent capacity alternate forms of stormwater removal adequate to prevent upstream flooding in excess of existing conditions. This responsibility shall include but is not limited to the installation of temporary

connections, bypass pumping, or other temporary means necessary until the new drainage system is fully operational.

1.18 SPILL OR DISCHARGE OF WASTEWATER OR RECLAIMED WATER

The discharge of wastewater or effluent (reclaimed water) into waters of the State and/or into canals, ditches, and ponds that are connected to waters of the State is prohibited. Any spill or discharge of wastewater or reclaimed water shall be immediately reported to the Engineer, the City's Project Manager, and the City's Emergency Dispatch Center. Contact information will be provided for all necessary City personnel and the Engineer at the Preconstruction Conference. In the event of a spill or discharge, the Contractor shall immediately control, contain, and stop the spill or discharge and shall repair any damage to the City's facilities.

The Contractor shall be responsible for any penalties and costs charged to the City by the FDEP and for all costs incurred by the City as a result of the Contractor's actions or as a result of the Contractor's negligence. The fines, and anticipated costs, which may be incurred by the City as a result of the Contractor's actions or negligence, shall be paid to the City within 30 days, or the costs incurred will be deducted from the total Contract amount.

1.19 SEQUENCE OF OPERATION

1.19.01 PIPELINE WORK

It is the intent of the City that all pipeline work associated with the Project be installed to completion in a timely and orderly manner to minimize inconvenience to the Public. Pipe and pipe materials shall not be stored or strung in residential areas more than 3 weeks in advance of pipe installation unless otherwise approved by the Engineer.

The Contractor shall include in the Project Schedule a Sequence of Operations including, but not limited to, the following components:

A. Pipe and pipe material storage
B. Bypass Pumping
C. Backfilling
D. Testing and repairs
E. Disinfection
F. Surface Restoration and Cleanup

1.19.02 PUMP/LIFT STATION WORK

It is essential that any Project work conducted at Pump/Lift Station sites be sequenced to minimize obstruction of normal daily operations of the Pump/Lift Station.

The Contractor shall include in the Project Schedule a Sequence of Operations including, but not limited to, the following components:

A. Equipment and material storage
B. Bypass Pumping

C. Testing and repairs
D. Surface Restoration and Cleanup

1.19.03 MISCELLANEOUS

Utility Companies may be present on the work site adjusting their facilities and installing new facilities. The Contractor's work shall be scheduled in such a manner as to minimize conflicts with various utility companies.

The Contractor shall clean up the site for each phase of work in accordance with the Contract Documents and confine work and personnel to designated areas in accordance with the Specifications. Before proceeding to a subsequent phase of work, unless otherwise approved by the Engineer.

1.19.04 NO TIME EXTENSION

If the Engineer orders construction, or a phase of construction, to be stopped due to the Contractor's neglect to adhere to the Sequence of Operations as outlined herein, the Stop Work Order shall not constitute a basis for extension of time.

1.20 WORK IN STREETS AND HIGHWAYS

All work within streets and highways shall be subject to the regulations and requirements of the City of St. Pete Beach, FDOT, and all other agencies with jurisdiction of the streets and highways in the work limits.

Methods and materials of construction used in restoration within such streets and highways shall conform to the requirements, inspection, and acceptance of the duly authorized representatives of the appropriate agency having jurisdiction. Restoration Work shall include but not be limited to: removal and replacement of pavement, sidewalk, curb, and gutter; replacement of storm sewer facilities; excavation and backfilling; and storage of materials and equipment.

1.21 WORK IN PRIVATE PROPERTY

The Contractor shall not trespass upon or in any way disturb private property without first obtaining written permission from the City to do so. In the event that, in the opinion of the Contractor, obtaining a temporary construction easement outside the limits of the right-of-way, of City-owned property, or of the easement(s) obtained by the City is necessary or desirable, it shall be the sole responsibility of the Contractor to obtain such easement from the owner of the property. If such easement is obtained by the Contractor, it shall contain provision to hold the City harmless from any operations of the Contractor within the easement limits. The Contractor shall not conduct construction operations on private property outside the limits of the right-of-way, of City-owned property, or of the easement(s) obtained by the City unless a copy of the Temporary Construction Easement Agreement is filed with the Engineer. It shall be the Contractor's responsibility to work equipment around poles, trees, or other obstructions and to do so at his own expense. The Contractor shall ensure all employees have a badge or visible identification during any time that they on the project site or within private property. This identification must be worn so that it is readily recognized and readable to the public.

Upon completion of work in easements, the Contractor shall, at no additional expense, restore the property, including all fences or other structures disturbed by his operations, to the full satisfaction of the City and shall obtain from the City a written release stating that restoration has been satisfactorily made. A copy of the completed written release shall be furnished to the City prior to payment. All items within the street right-of-way or sewer easement shall be removed, or removed and replaced, or restored as directed by the City.

1.22 PERMITS

Construction projects performed for the City will require licenses and permits in the same manner as private construction projects within the City.

The Contractor shall secure, at his expense, all licenses and permits, and shall comply with all applicable laws, regulations, and codes as required by the State of Florida and/or the City of St. Pete Beach whether performed by the Contractor or by others. The Contractor must be registered to complete such work within Pinellas County.

1.23 FIELD OFFICE AND APPURTENANT STRUCTURES

No field office or appurtenant structures by the Contractor, any subcontractor, or any material supplier, will be allowed on the Project site.

Space on City property or rights-of-way proposed to be used for storage and a field office for the Contractor shall be approved by the Engineer prior to installation providing such uses will not interfere in any manner with the construction of the work or the operation of existing facilities.

1.24 CONTRACTOR'S SIGN

No sign by the Contractor, any subcontractor, or any material supplier, will be allowed on the Project site.

1.25 MOBILIZATION

Mobilization shall include but is not limited to all preparatory work and operations necessary to begin the Project, including moving of personnel, equipment, traffic control, and all else necessary to commence work. The cost of bonds, insurance, shop drawings, and preconstruction expenses shall also be included.

If a separate Pay Item is included for mobilization, payment will be as specified for that Pay Item. If no Pay Item is included, costs for mobilization shall be included with the costs for the major Work items included in the Proposal.

1.26 WATER PURCHASE

Water used in connection with this Project must be coordinated with Pinellas County. Reclaimed water used in connection with this Project must be coordinated with the City.

1.27 TRAFFIC CONTROL

The Contractor shall provide required traffic controls under City observation. The Contractor shall notify the City's Project Manager a minimum of 2 working days prior to any construction affecting traffic flow. A Maintenance of Traffic plan drawing shall be submitted for review by the Engineer prior to each lane closure or opening during construction. All traffic control devices utilized during construction shall be provided by the Contractor and meet the requirements set forth in the latest revision of U.S. Department of Transportation Federal Highway Administration's "Manual on Uniform Traffic Control Devices for Streets and Highways" and the Florida State Department of Transportation's "Standard Plans for Road and Bridge Construction." Failure or refusal, on the part of the Contractor, to install, maintain and/or position traffic control devices promptly, fully, and in an acceptable manner, shall be sufficient cause for the City, after 24-hour notice, to perform the traffic control with its own organization, or to contract with any other individual, firm, or corporation to perform the required traffic control. All costs and expenses incurred thereby shall be charged against the defaulting Contractor, and the amount thereof deducted from any money due, or which may become due him, or shall be charged against the Contract Bond. Any Work performed as described by this paragraph, shall not relieve the Contractor in any way of his responsibility for the Work performed by him.

Traffic shall be performed so that vehicular traffic shall be maintained on with at least one 10-foot wide lane in each direction at all times. An acceptable detour route shall be developed by the Contractor to redirect traffic when and where necessary, with the approval of the Transportation Special Events Division. Temporary lanes shall be constructed with a minimum 1-inch thick asphaltic concrete surface over a 6-inch thick limerock base compacted to 98% of the maximum density in accordance with AASHTO T-180.

Failure of the Contractor to comply with any of the above traffic control requirements may result in issuance of a stop work order until the violation is corrected.

All maintenance of traffic in the FDOT right-of-way shall be in accordance with FDOT requirements.

1.28 TREE PROTECTION

Particular care shall be taken by the Contractor to protect trees during construction by erecting approved barricades to prevent unnecessary damage to trunk and roots during construction. Such barriers shall protect the area within the dripline.

The Contractor shall prune all branches that interfere with construction in accordance with American Forestry Association Standards. Roots over 2-inch diameter shall be preserved wherever possible. If root pruning is required, roots shall be cut cleanly.

Temporary soil deposits, concrete block, concrete wash, or solvents shall not be placed within the dripline. The grade within the dripline shall be preserved. If adjacent grade is altered, protective measures such as those described in the Florida State Division of Forestry "Tree Protection Manual for Builders and Developers" shall be constructed to protect the tree(s) from deleterious effects of the grade change.

1.29 TREE REMOVAL AND REPLACEMENT

The Contractor shall obtain any necessary tree removal permit, shall furnish and replace trees as required, and shall perform this Work in a manner conforming to all applicable provisions of said regulations or permit.

The cost of tree removal and obtaining the tree removal permits shall be included in the cost of the appropriate associated Contract Pay Item under which the Work is to be performed. The Contractor shall remove trees as required and approved by the Engineer whether or not said trees are shown on the Contract Drawings. Trees that must be removed, except for Australian pine, Brazilian pepper, punk, and other exempt species, shall be replaced as directed. Replacement trees shall be of native species at least 8-feet tall and at least 3-inch caliper diameter.

1.30 UTILITIES

Prior to construction, the Contractor shall familiarize himself with the location of all existing utilities and facilities within the Project Site. The Contractor must take the necessary precautions for the protection of any utility encountered on the Project or the restoration of any utility damaged during the work.

If excavation is required, The Contractor shall notify, at least 48 hours before breaking ground, all public or private service corporations having wire, poles, pipes, conduit, manholes, or other structures that may be affected by this operation, including all structures which are affected and not shown on these plans. Utility companies shall be contacted by calling the utility notification center "Sunshine 811" at 1-800-432-4770. Owners which are not members of the state's One Call service must be called directly. The City will furnish to the Contractor the available records of City utilities. The Contractor shall locate and mark all City utilities for his reference and for use by utility companies. The Contractor shall act as the City's agent for locating and marking City underground utilities within the Project limits, in accordance with the Florida Underground Facilities Damage Prevention and Safety Act (FS 556).

In all cases where existing utility lines may be interfered with by the work, the Contractor shall give a minimum of 48 hours' notice (excluding Saturdays, Sundays, and legal holidays) to the owners of such utilities to permit them to relocate the lines prior to construction. Existing utilities have been shown on the Contract Drawings insofar as information is reasonably available. However, it will be the Contractor's responsibility to preserve all existing utilities whether shown on the Contract Drawings or not. All maintenance, repair, and replacement of existing utilities shall be in accordance with the rules and regulations of the various utility companies having jurisdiction. All existing storm sewers, driveway drains, surface drainpipes and other property, removed or damaged during construction shall be repaired and reconnected by the Contractor as directed by the City at no additional cost to the City.

1.31 NEIGHBORHOOD NOTIFICATION

Not less than 7 days prior to the commencement of Work in the right-of-way, the Contractor shall notify all residents and businesses along the construction route with a printed door hanger notice indicating the scheduled date of construction, the type of construction, and the Contractor's and Superintendent's contact information. The door hanger text and a list of residents and businesses to

which the notification has been delivered shall be compiled and submitted to the Engineer prior to the Contractor commencing Work.

1.32 SHOP, FIELD, AND LABORATORY TESTING

The Engineer may require testing by certified personnel of certain materials to be incorporated in the Work, such as: soils density, pavement, concrete pipe and appurtenances, and welds.

In the event any such testing is required by the Engineer, a detailed description will be found in these Technical Specifications concerned with the specific item of Work.

Where reference is made for design mixes, tests of materials, or work performed, or where in the opinion of the Engineer, tests are required to ascertain compliance with the Specifications, the Contractor shall have such tests made by an approved testing laboratory. No additional payment will be made for these tests.

1.33 SALVAGED MATERIALS

The Contractor shall not proceed with demolition of existing materials or equipment without review and acceptance from the Engineer for the method of disposal.

All materials which are not returned to the City yard shall be disposed in an approved disposal site. The Engineer may request confirmation of the site's approval for disposal of the specific materials.

Salvaged materials shall be loaded on Contractor trucks and returned to the Public Services yard at 7581 Boca Ciega Drive, St. Pete Beach, Florida. The City will designate the specific location at the yard for placement of salvaged materials by the Contractor.

The following materials shall be removed and returned by the Contractor: pumps and pump rails, and all other materials as directed by the Engineer.

END OF SECTION

SECTION 2 - PAY ITEM DESCRIPTIONS

2.01 SCOPE

The scope of this section of the Contract Documents is to further define the items included in each Pay Item in the Bid Form section of the Contract Documents. Payment will be made based on the specified items included in the description in this section for each Pay Item.

All contract prices included in the Bid Form section will be full compensation for all shop drawings, working drawings, labor, materials, tools, equipment and incidentals necessary to complete the construction as shown on the Contract Drawings and/or as specified in the Contract Documents to be performed under this Contract. Actual quantities of each item bid on a unit price basis will be determined upon completion of the construction in the manner set up for each item in this section of the Specifications. Payment for all items listed in the Bid Form will constitute full compensation for all work shown and/or specified to be performed under this Contract.

2.02 ESTIMATED QUANTITIES

The quantities shown are approximate and are given only as a basis of calculation upon which the award of the Contract is to be made. The City does not assume any responsibility for the final quantities, nor shall the Contractor claim misunderstanding because of such estimate of quantities. Final payment will be made only for satisfactorily completed quantity of each item.

2.03 WORK OUTSIDE AUTHORIZED LIMITS

No payment will be made for work constructed outside the authorized limits of work.

2.04 MEASUREMENT STANDARDS

Unless otherwise specified for the particular items involved, all measurements of distance shall be taken horizontally or vertically.

2.05 AREA MEASUREMENTS

In the measurement of items to be paid for on the basis of area of finished work, the lengths and/or widths to be used in the calculations shall be the final dimensions measured along the surface of the completed work within the neat lines shown or designated.

2.06 LUMP SUM ITEMS

Where payment for items is shown to be paid for on a lump sum basis, no separate payment will be made for any item of work required to complete the lump sum items. Lump sum contracts shall be complete, tested and fully operable prior to request for final payment. Contractor may be required to provide a break-down of the lump sum totals.

2.07 PAY ITEM DESCRIPTIONS

Separate payment will be made for the items of work described herein and listed on the Bid Form. Any related work not specifically listed but required for satisfactory completion of the work shall be considered to be included in the scope of the appropriate listed work items.

No separate payment will be made for the incidental items not included in the Pay Item descriptions. The cost to complete such work shall be included in the applicable Pay Item unit cost. Final payments shall not be requested by the Contractor or made by the City until as-built (record) drawings have been submitted and approved by the City. Incidental items include, but are not limited to:

1. Shop Drawings, Working Drawings.
2. Clearing, grubbing and grading except as hereinafter specified.
3. Trench excavation, including necessary pavement removal and rock removal, except as otherwise specified.
4. Dewatering and disposal of surplus water.
5. Structural fill, backfill, and grading.
6. Replacement of unpaved roadways, and shrubbery plots.
7. Foundation and borrow materials, except as hereinafter specified.
8. Testing and placing system in operation.
9. Any material and equipment required to be installed and utilized for the tests.
10. Pipe, structures, pavement replacement, driveways and/or appurtenances included within the limits of lump sum work, unless otherwise shown.
11. Maintaining the existing quality of service during construction.
12. Appurtenant work as required for a complete and operable system.
13. Seeding and hydro mulching.
14. As-built Record Drawings, clean up, and miscellaneous work.

WASTEWATER SYSTEM MANHOLE REHABILITATION

PAY ITEM NO. 1 – MOBILIZATION

The work specified in this item consists of the preparatory work and operations in mobilizing for beginning work on the project This item includes, but is not limited to, those operations necessary for the movement of personnel, equipment, supplies and incidentals to and from the project site as a single occurrence per work site, and for the establishment of Subcontractor's temporary offices, buildings, safety equipment, first aid supplies, sanitary and other facilities, as required by these Specifications, special provisions, and State and local laws and regulations. The costs of bonds, permits and any required insurance, and any other preconstruction expense necessary for the start of the work, excluding the cost of construction materials, shall also be included in this item. Labor and equipment travel time from/to the site is included in this pay item.

The Contractor will be required to respond to the request of the Engineer or designated representative within ten (10) calendar days of notification. The Scope of Work will be developed by Project manager and will be executed in accordance with the terms and conditions of this contract.

The quantity of mobilization to be paid for under this item shall be measured as one unit each (EA) per job assignment. One (1) mobilization will be allowed for each job assignment, project, or work order no matter how many times the equipment must be relocated by loading, transporting, and unloading, or under its own power to complete the job assignment or project. Payment for mobilization shall not exceed 10 percent (10%) of the total Contract cost unless the Contractor can prove to the City that his actual mobilization cost exceeds 10 percent (10%).

PAY ITEMS NO. 2 – 14 – MAINTENANCE OF TRAFFIC

This work consists of maintaining traffic within the limits of the project for the duration of the construction period, including any temporary suspensions of the work. All Maintenance of Traffic (MOT) shall comply with FDOT Standard Plans Index 102 Series for Maintenance of Traffic. These pay items shall include labor and equipment to furnishing, installing and maintaining of traffic control and safety devices during construction; the construction and maintenance of any necessary detour facilities; providing necessary facilities for access to residences, businesses, pedestrian, schools, etc., control of dust and any other special requirements for safe and expeditious movement of traffic as may be called for on the plans. MOT shall include all of such facilities, devices and operations as are required for the safety and convenience of the public, as well as for minimizing public nuisance. The Contractor, however, shall not obstruct nor create a hazard to any traffic during the performance of the work and shall be responsible for repair of any damage to existing pavement or facilities caused by his operations. Traffic Control Devices include all types of barricades, arrow boards, signs, temporary pavement markers, lights, concrete barriers and permanent striping. All travel, equipment, labor overhead or any other associated expenses in transportation and setting out the MOT will be included in the price. All MOT line items for Multi-Lane work shall include all costs for items associated with the appropriate FDOT

Index (no separate payment for signs, barricades, etc. included with index will be allowed).

Maintenance of Traffic (MOT) shall be measured as units of work, each/day (EA/DY), hourly (HR) or by linear foot (LF) accordingly completed and priced on an individual project basis. The lump sum price for each assignment will be based on the specific MOT requirements for the assignment. The Contractor shall provide the Engineer with a proposal for the MOT that includes a breakdown of the costs, which are included in the lump sum price, and receive written acceptance from the Engineer prior to the installation of the MOT.

PAY ITEM	DESCRIPTION	UNITS
2	Flagmen (Per-Flagmen)	HR
3	Multi Lane, Lane Closures (FDOT Index No. 613)	EA/DY
4	Multi Lane, Intersection (FDOT Index No. 615)	EA/DY
5	Arrow Boards - 5' Minimum Horizontal Size	EA/DY
6	Variable Message Board	EA/DY
7	Concrete Barrier (FDOT Index No. 100)	EA/DY
8	Low Profile Barrier (FDOT Index No. 120)	EA/DY
9	Signs in Work Zones	EA/DY
10	6" Solid line Thermo Plastic - Permanent	LF
11	24" Stop Bar, Solid, Thermo Plastic, Perm.	LF
12	6" Skip line (6'-10' Skip) Thermo Plastic-Perm.	LF
13	Barricades Type III, with Warning Lights	EA/DY
14	Barricades Type I or II, with Warning Lights	EA/DY

PAY ITEM NO. 15 – REPAIR MANHOLE BENCH AND CHANNEL

Payment will be made per each manhole regardless of manhole diameter or depth. Payment shall include all materials, labor, equipment, and supplies necessary for the Repair of Manhole Bench and Channel, and specifically includes, but is not limited to, placement of temporary plugs, removal and disposal of all sand, rubble, deposits, and other accumulated debris, removal of deficient, deteriorated or unsound bench and channel materials, minor infiltration elimination in walls and base beneath the bench and channel, repair or replacement of bench and channels, cleaning, disposal of debris, restoration, and all other appurtenant work.

Separate Pay Items are provided for Traffic Control, Pump-Around Pumping Operation, and "Severe" Manhole Infiltration Elimination used in conjunction with this Work.

PAY ITEMS NO. 16 & 17 – REPAIR CHIMNEY, ADJUST/REPLACE MH CASTING

Payment will be made per each manhole regardless of manhole casting diameter or depth. Payment shall include all materials, labor, equipment, and supplies necessary for repair of chimney, and adjustment or replacement of manhole casting, and specifically includes, but is not limited to, locating and uncovering manhole, excavation, saw cutting, removal and disposal of existing asphalt pavement as needed, removal of existing manhole frame and cover casting, removal of deficient, deteriorated or unsound chimney materials, minor infiltration elimination, repair or replacement of chimney, reinstalling the existing manhole casting, delivering and

installing a new manhole casting of the same nominal size as the existing casting, backfill, restoration of surface to match existing conditions, cleaning, disposal of debris, and all other appurtenant work. Compensation for the Contractor to furnish new manhole castings will be made under separate Pay Items. The City may elect to furnish new manhole castings for the Contractor to install. The cost of City furnished manhole castings will be deducted from the Contract Price.

PAY ITEM	DESCRIPTION	UNITS
16	Repair Chimney, Asjust/Replace MH Casting - Unpaved	EA
17	Repair Chimney, Asjust/Replace MH Casting - Asphalt Pavement	EA

PAY ITEM NO. 18 – REBUILD CORBEL/CHIMNEY FOR TYPE B MANHOLE CASTING

Payment will be made per each manhole regardless of manhole casting diameter or depth. Payment shall include all materials, labor, equipment, and supplies necessary to rebuild and enlarge corbel/chimney for Type B manhole casting, and specifically includes, but is not limited to, additional pavement removal and excavation, removal of chimney/corbel materials and rebuilding chimney to match larger Type B manhole casting diameter, additional backfill, additional surface restoration, disposal of additional debris, and all other appurtenant work. This Pay Item is applicable only in conjunction with, and in addition to, the Work as listed under Pay Items 16 and 17.

PAY ITEMS NO. 19 & 20 – FURNISH MANHOLE CASTING

Payment will be made per each manhole casting for the applicable casting types listed in the Proposal. Payment shall include all materials, labor, equipment, and supplies necessary to furnish Type B manhole castings (nominal 34-inch diameter) or Type E manhole castings (nominal 23-inch diameter), and specifically includes, but is not limited to, purchasing and delivering the manhole casting materials to designated Work locations for use to replace existing manhole castings.

PAY ITEM	DESCRIPTION	UNITS
19	Furnish Manhole Casting – Type B	EA
20	Furnish Manhole Casting – Type E	EA

PAY ITEM NO. 21 – SEVERE MANHOLE INFILTRATION ELIMINATION

Payment will be made per each manhole regardless of the manhole diameter, depth, or the number of infiltration points sealed in each manhole. Payment shall include all materials, labor, equipment, and supplies necessary, and specifically includes, but is not limited to, surface preparation, drilling of grout holes into or through the manhole wall and floor, grout pipe penetrations, grout injection, removal of grout pipe and sealing grout holes, testing, restoration, and all other appurtenant work as specified.

PAY ITEM NO. 22 – CHEMICAL SEALING - GROUT

Payment will be made per gallon. This Pay item is applicable only in conjunction with Pay Item No. 21. Payment shall include all materials, equipment and labor for chemically sealing excessive infiltration defects for "Severe" Manhole Infiltration Elimination prior to manhole repairs.

PAY ITEMS NO. 23 & 24 – INTERNAL CHIMNEY SEALANT

Payment will be made per each manhole for the applicable manhole casting types listed in the Bid Form. Payment shall include all materials, labor, equipment, and supplies necessary for the installation of the internal chimney sealant for Type B manhole castings (nominal 34-inch diameter) or Type E manhole castings (nominal 23-inch diameter), and specifically includes, but is not limited to, cleaning, surface preparation, "Minor" infiltration elimination, applying the chimney sealant, testing, restoration, and all other appurtenant work.

PAY ITEM	DESCRIPTION	UNITS
23	Internal Chimney Sealant – Type B Manhole Casting	EA
24	Internal Chimney Sealant – Type E Manhole Casting	EA

PAY ITEM NO. 25 – ADDITIONAL ACCESS COST FOR MANHOLE COATING

Payment will be made per each Work location. A Work location shall be limited to the additional access costs for manhole coating Work to be performed on single or multiple proximate access structures or manholes regardless of the number of manholes coated. Measurement will be for a manhole coating installation where the manhole(s) is not readily accessible by standard equipment, e.g., when located in rear easements. Payment shall include all additional labor, equipment, materials and supplies to complete the manhole coating installation in locations with limited access.

PAY ITEMS NO. 26 – 33 – BYPASS PUMPING SETUP & OPERATION

This item provides for set up and operation of by-pass sewage pumping equipment and temporary piping as required and as described in the Standard Technical Specifications. This Pay Item is applicable on projects or repairs that have high flow or require an over night by pass operation.

The quantity to be measured for payment under this Pay Item will be the actual number of by-pass pumping set ups and operations, per part of day, required by the Engineer in the work. The minimum measurement for this pay item is eight (8) hours or 0.333 days and is measured from the time that the sewage is actually by-passed. This eight (8) hour minimum (0.333 days) includes full compensation for set up and operation for up to the first eight (8) hour period. Additional time will be in tenths of the day or twenty-four (24) hour period. The quantities determined shall be paid per day (DAY) or portion of day of by-pass pumping set up and operation.

PAY ITEM	DESCRIPTION	UNITS
26	Bypass Pumping, Set up, 6" - 10" diameter	EA
27	Bypass Pumping, Set up, 12" - 14" diameter	EA

28	Bypass Pumping, Set up, 15" - 21" diameter	EA
29	Bypass Pumping, Set up, 24" diameter	EA
30	Bypass Pumping, Operation, 6" - 10" diameter	DAY
31	Bypass Pumping, Operation, 12" - 14" diameter	DAY
32	Bypass Pumping, Operation, 15" - 21" diameter	DAY
33	Bypass Pumping, Operation, 24" diameter	DAY

PAY ITEMS NO. 34-36 – PURE CALCIUM ALUMINATE CEMENTITIOUS MH COATING, INITIAL

Payment will be made per each manhole for the applicable manhole diameters listed below, regardless of the overall manhole depth. Measurement will be from the bottom of the manhole to at least 3 vertical feet above the lowest pipe invert, or to the bottom of the cover frame if less than 3 vertical feet, and will be the average of minimum/maximum manhole diameter measured 12-inches above outgoing pipe rounded to the nearest foot. Payment shall include all materials, labor, equipment, and supplies necessary for installation, and specifically includes, but is not limited to, temporary plugs, cleaning, removal and disposal of all sand, rubble, deposits, and other accumulated debris, removal of steps, surface preparation, "Minor" infiltration elimination, sealing of all manhole wall penetrations, coating the lower 3 vertical feet of the manhole (includes invert, channel, bench, piping, CIPP liner interface, wall, and cone/corbel/chimney as applicable), testing, restoration, and all other appurtenant work as specified.

Separate Pay Items are provided for Maintenance of Traffic, Bypass Pumping Operation, and "Severe" Manhole Infiltration Elimination used in conjunction with this Work.

PAY ITEM	DESCRIPTION	UNITS
34	Pure Calcium Aluminate Cementitious MH Coating – 48” Diameter, Initial	EA
35	Pure Calcium Aluminate Cementitious MH Coating – 60” Diameter, Initial	EA
36	Pure Calcium Aluminate Cementitious MH Coating – 72” Diameter, Initial	EA

PAY ITEMS NO. 37-39 – PURE CALCIUM ALUMINATE CEMENTITIOUS MH COATING, ADDITIONAL

Payment will be made per vertical foot for the applicable manhole diameters listed below, regardless of the overall manhole depth. Measurement will be from the lowest pipe invert to the bottom of the cover frame minus the 3 vertical feet paid for under Pay Items 34 through 36. This Pay Item is applicable only in conjunction with, and includes the same Work as listed in Pay Items 34 through 36.

PAY ITEM	DESCRIPTION	UNITS
37	Pure Calcium Aluminate Cementitious MH Coating – 48” Diameter, Additional	VF
38	Pure Calcium Aluminate Cementitious MH Coating –	VF

	60” Diameter, Additional	
39	Pure Calcium Aluminate Cementitious MH Coating – 72” Diameter, Additional	VF

PAY ITEMS NO. 40-42 – REINFORCED POLYMER MH COATING, INITIAL

Payment will be made per each manhole for the applicable manhole diameters listed below, regardless of the overall manhole depth. Measurement will be from the bottom of the manhole to at least 3 vertical feet above the lowest pipe invert, or to the bottom of the cover frame if less than 3 vertical feet, and will be the average of minimum/maximum manhole diameter measured 12-inches above outgoing pipe rounded to the nearest foot. Payment shall include all materials, labor, equipment, and supplies necessary for installation, and specifically includes, but is not limited to, temporary plugs, cleaning, removal and disposal of all sand, rubble, deposits, and other accumulated debris, removal of steps, surface preparation, "Minor" infiltration elimination, sealing of all manhole wall penetrations, coating the lower 3 vertical feet of the manhole (includes invert, channel, bench, piping, CIPP liner interface, wall, and cone/corbel/chimney as applicable), testing, restoration, and all other appurtenant work as specified.

Separate Pay Items are provided for Maintenance of Traffic, Bypass Pumping Operation, and "Severe" Manhole Infiltration Elimination used in conjunction with this Work.

PAY ITEM	DESCRIPTION	UNITS
40	Reinforced Polymer MH Coating – 48” Diameter, Initial	EA
41	Reinforced Polymer MH Coating – 60” Diameter, Initial	EA
42	Reinforced Polymer MH Coating – 72” Diameter, Initial	EA

PAY ITEMS NO. 43-45 – REINFORCED POLYMER MH COATING, ADDITIONAL

Payment will be made per vertical foot for the applicable manhole diameters listed below, regardless of the overall manhole depth. Measurement will be from the lowest pipe invert to the bottom of the cover frame minus the 3 vertical feet paid for under Pay Items 40 through 42. This Pay Item is applicable only in conjunction with, and includes the same Work as listed in Pay Items 40 through 42.

PAY ITEM	DESCRIPTION	UNITS
43	Polymer MH Coating – 48” Diameter, Additional	VF
44	Polymer MH Coating – 60” Diameter, Additional	VF
45	Polymer MH Coating – 72” Diameter, Additional	VF

PAY ITEMS NO. 46-48 – CONCRETE CURB REPLACEMENT

Payment for all work included in this Pay Item will be made at the applicable Contract unit price bid per linear foot for removal of existing curbing and for furnishing and placing curb and gutter as shown on the Contract Drawings and listed on the Bid Form. Measurement will be per actual number of linear feet of curbing installed. Payment shall represent full compensation for removal of existing curb and all labor, material and equipment for compacting subgrade, forming,

furnishing, placing the concrete, and finishing as specified and all incidentals necessary for completion of this Pay Item.

PAY ITEM	DESCRIPTION	UNITS
46	Concrete Curb Replacement – Type D	LF
47	Concrete Curb Replacement – Type F	LF
48	Concrete Curb Replacement – Miami Curb	LF

PAY ITEMS NO. 49 & 50 – CONCRETE SIDEWALK REPLACEMENT

Payment will be made per square yard for the applicable sidewalk thickness listed below, regardless of the overall length. Measurement will be for complete sections. Payment shall include all materials, labor, equipment, and supplies necessary for concrete sidewalk replacement, and specifically includes, but is not limited to, excavation, saw cutting and removal of existing sidewalk, installation of replacement sidewalk to match cross section and slope of adjacent sidewalk, expansion joint material, contraction joints, backfill, restoration, cleaning, disposal of debris, and all other appurtenant work as specified.

PAY ITEM	DESCRIPTION	UNITS
49	Concrete Sidewalk Replacement – 4” Thick	SY
50	Concrete Sidewalk Replacement – 6” Thick	SY

PAY ITEMS NO. 51 & 52 – CONCRETE DRIVEWAY REPLACEMENT

Payment will be made per square yard for the applicable driveway thickness listed below, regardless of the overall length. Measurement will be for complete section. Payment shall include all materials, labor, equipment, and supplies necessary for concrete driveway replacement, and specifically includes, but is not limited to, excavation, saw cutting and removal of existing driveway, installation of replacement driveway to match cross section and slope of existing driveway, expansion joint material, contraction joints, backfill, restoration, cleaning, disposal of debris, and all other appurtenant work as specified.

PAY ITEM	DESCRIPTION	UNITS
51	Concrete Driveway Replacement – 4” Thick	SY
52	Concrete Driveway Replacement – 6” Thick	SY

PAY ITEM NO. 53 – INFLOW DISH

Payment for all work included under this Pay Item will be made at the Contract unit price bid for furnishing and installing each inflow dish as shown on the Contract Drawings and listed on the Bid Form. Payment will be made for each inflow dish installed and will represent full compensation for all labor, material, excavation, including rock, bedding, backfill, compaction, sheeting, testing and equipment required to complete this Pay Item. Included in this Pay Item, but not limited to, are all 304 stainless steel inflow dishes, as shown in the Contract Drawings. Submittal shall include a complete bill of materials for all equipment, showing dimensions and materials of construction of

all components, verifying that product will meet the standards specified in the Technical Specifications and Contract Drawings.

WASTEWATER SYSTEM PIPE LINING

PAY ITEM NO. 1 – MOBILIZATION

The work specified in this item consists of the preparatory work and operations in mobilizing for beginning work on the project This item includes, but is not limited to, those operations necessary for the movement of personnel, equipment, supplies and incidentals to and from the project site as a single occurrence per work site, and for the establishment of Subcontractor's temporary offices, buildings, safety equipment, first aid supplies, sanitary and other facilities, as required by these Specifications, special provisions, and State and local laws and regulations. The costs of bonds, permits and any required insurance, and any other preconstruction expense necessary for the start of the work, excluding the cost of construction materials, shall also be included in this item. Labor and equipment travel time from/to the site is included in this pay item.

The Contractor will be required to respond to the request of the Engineer, or designated representative within ten (10) calendar days of notification. The Scope of Work will be developed by Project manager and will be executed in accordance with the terms and conditions of this contract.

The quantity of mobilization to be paid for under this item shall be measured as one unit each (EA) per job assignment. One (1) mobilization will be allowed for each job assignment, project, or work order no matter how many times the equipment must be relocated by loading, transporting and unloading, or under its own power to complete the job assignment or project. Payment for mobilization shall not exceed 10 percent (10%) of the total Contract cost unless the Contractor can prove to the City that his actual mobilization cost exceeds 10 percent (10%).

PAY ITEMS NO. 2 – 14 – MAINTENANCE OF TRAFFIC

This work consists of maintaining traffic within the limits of the project for the duration of the construction period, including any temporary suspensions of the work. All Maintenance of Traffic (MOT) shall comply with FDOT Standard Plans Index 102 Series for Maintenance of Traffic. These pay items shall include labor and equipment to furnishing, installing and maintaining of traffic control and safety devices during construction; the construction and maintenance of any necessary detour facilities; providing necessary facilities for access to residences, businesses, pedestrian, schools, etc., control of dust and any other special requirements for safe and expeditious movement of traffic as may be called for on the plans. MOT shall include all of such facilities, devices and operations as are required for the safety and convenience of the public, as well as for minimizing public nuisance. The Contractor, however, shall not obstruct nor create a hazard to any traffic during the performance of the work and shall be responsible for repair of any damage to existing pavement or facilities caused by his operations. Traffic Control Devices include all types of barricades, arrow boards, signs, temporary pavement markers, lights, concrete barriers and permanent striping. All travel, equipment, labor overhead or any other associated expenses in transportation and setting out the MOT will be included in the price. All MOT line items for Multi-Lane work shall include all costs for items associated with the appropriate FDOT Index (no separate payment for signs, barricades, etc. included with index will be allowed).

Maintenance of Traffic (MOT) shall be measured as units of work, each/day (EA/DY), hourly (HR) or by linear foot (LF) accordingly completed and priced on an individual project basis. The lump sum price for each assignment will be based on the specific MOT requirements for the assignment. The Contractor shall provide the Engineer with a proposal for the MOT that includes a breakdown of the costs, which are included in the lump sum price, and receive written acceptance from the Engineer prior to the installation of the MOT.

PAY ITEM	DESCRIPTION	UNITS
2	Flagmen (Per-Flagmen)	HR
3	Multi Lane, Lane Closures (FDOT Index No. 613)	EA/DY
4	Multi Lane, Intersection (FDOT Index No. 615)	EA/DY
5	Arrow Boards - 5' Minimum Horizontal Size	EA/DY
6	Variable Message Board	EA/DY
7	Concrete Barrier (FDOT Index No. 100)	EA/DY
8	Low Profile Barrier (FDOT Index No. 120)	EA/DY
9	Signs in Work Zones	EA/DY
10	6" Solid line Thermo Plastic - Permanent	LF
11	24" Stop Bar, Solid, Thermo Plastic, Perm.	LF
12	6" Skip line (6'-10' Skip) Thermo Plastic-Perm.	LF
13	Barricades Type III, with Warning Lights	EA/DY
14	Barricades Type I or II, with Warning Lights	EA/DY

PAY ITEMS NO. 15 – 22 – CIPP MAIN LINER

Payment will be made per linear foot for the applicable pipe diameters and minimum thicknesses listed below, regardless of the depth or overall length. Measurement will be from the upstream manhole to the downstream manhole centerlines. Payment shall include all materials, labor, equipment, and supplies necessary for the CIPP Main Liner installation, and specifically includes, but is not limited to, pre-rehabilitation CCTV inspection, liner sampling and storage of samples for testing, sealing liner connections at manholes, matching existing manhole lining to the CIPP liner, matching existing flow channels and surfacing to the liner to minimize turbulence, cleaning, removal and disposal of all sand, rubble, deposits, and other accumulated debris after liner installation, post-rehabilitation CCTV inspection video and log, restoration, and all other appurtenant work as specified.

PAY ITEM	DESCRIPTION	UNITS
15	CIPP Main Liner 6” Diameter – 6.0 mm Thickness	LF
16	CIPP Main Liner 8” Diameter – 6.0 mm Thickness	LF
17	CIPP Main Liner 10” Diameter – 6.0 mm Thickness	LF
18	CIPP Main Liner 12” Diameter – 6.0 mm Thickness	LF
19	CIPP Main Liner 15” Diameter – 7.5 mm Thickness	LF
20	CIPP Main Liner 18” Diameter – 9.0 mm Thickness	LF
21	CIPP Main Liner 21” Diameter – 9.0 mm Thickness	LF
22	CIPP Main Liner 24” Diameter – 10.5 mm Thickness	LF

PAY ITEMS NO. 23 – 30 – CIPP MAIN LINER THICKNESS VARIANCE

Payment for CI PP Main Liner Thickness Variance will be made per linear foot for the applicable pipe diameters listed in the Proposal, regardless of depth or overall length. Liner thickness may be varied due to field conditions requiring a change in the specified minimum thickness. The per linear foot price for CIPP Main Liner Thickness Variance will be added to, or deducted from, the per linear foot price of the Main Liner for the applicable pipe diameter listed in the Bid Form (Pay Items 15 through 22). The Main Liner per linear foot price will be adjusted for each 1.5 mm thickness variance increment. Liner thickness shall be in accordance with Technical Specification Section headed "Cured-In-Place-Pipe (CIPP) " unless otherwise approved by the Engineer in writing.

PAY ITEM	DESCRIPTION	UNITS
23	CIPP Main Liner 6” Diameter – Thickness Variance + 1.5 mm	LF
24	CIPP Main Liner 8” Diameter – Thickness Variance + 1.5 mm	LF
25	CIPP Main Liner 10” Diameter – Thickness Variance + 1.5 mm	LF
26	CIPP Main Liner 12” Diameter – Thickness Variance + 1.5 mm	LF
27	CIPP Main Liner 15” Diameter – Thickness Variance + 1.5 mm	LF
28	CIPP Main Liner 18” Diameter – Thickness Variance + 1.5 mm	LF
29	CIPP Main Liner 21” Diameter – Thickness Variance + 1.5 mm	LF
30	CIPP Main Liner 24” Diameter – Thickness Variance + 1.5 mm	LF

PAY ITEMS NO. 31 – 38 – BYPASS PUMPING SETUP & OPERATION

This item provides for set up and operation of by-pass sewage pumping equipment and temporary piping as required and as described in the Standard Technical Specifications. This Pay Item is applicable on projects or repairs that have high flow or require an over night by pass operation.

The quantity to be measured for payment under this Pay Item will be the actual number of by-pass pumping set ups and operations, per part of day, required by the Engineer in the work. The minimum measurement for this pay item is eight (8) hours or 0.333 days and is measured from the time that the sewage is actually by-passed. This eight (8) hour minimum (0.333 days) includes full compensation for set up and operation for up to the first eight (8) hour period. Additional time will be in tenths of the day or twenty-four (24) hour period. The quantities determined shall be paid per day (DAY) or portion of day of by-pass pumping set up and operation.

PAY ITEM	DESCRIPTION	UNITS
31	Bypass Pumping, Set up, 6" - 10" diameter	EA
32	Bypass Pumping, Set up, 12" - 14" diameter	EA
33	Bypass Pumping, Set up, 15" - 21" diameter	EA
34	Bypass Pumping, Set up, 24" diameter	EA
35	Bypass Pumping, Operation, 6" - 10" diameter	DAY
36	Bypass Pumping, Operation, 12" - 14" diameter	DAY
37	Bypass Pumping, Operation, 15" - 21" diameter	DAY
38	Bypass Pumping, Operation, 24" diameter	DAY

PAY ITEMS NO. 39-42 – NORMAL CLEANING

Payment for Normal Cleaning will be made per linear foot for the applicable pipe diameters listed in the Bid Form, regardless of depth or overall length. Measurement will be from the upstream manhole to the downstream manhole centerlines and based on the average debris depth. Payment shall include all materials, labor, equipment, and supplies necessary for Normal Cleaning, and specifically includes, but is not limited to, the complete removal and disposal of all accumulated debris within the pipe including sludge, dirt, rocks, sand, rubble, and other materials and obstructions, restoration, and all other appurtenant work as specified. Separate Pay Items are provided for Specialty Cleaning.

PAY ITEM	DESCRIPTION	UNITS
39	Normal Cleaning – 6” and 8” Diameter	LF
40	Normal Cleaning – 10” and 12” Diameter	LF
41	Normal Cleaning – 15” and 18” Diameter	LF
42	Normal Cleaning – 21” and 24” Diameter	LF

PAY ITEMS NO. 43-46 – SPECIALTY CLEANING

Payment will be made per linear foot for the applicable pipe diameters listed in the Bid Form, regardless of depth or overall length. Measurement will be based on a minimum of 50 linear feet of pipe, or the actual length of the Specialty Cleaning performed, but not necessarily for the entire pipe segment length. Specialty Cleaning of only joints within a pipe segment, or portion thereof, shall count as 2.5 feet of equivalent pipe length (For Example: 400 feet of 8" pipe with 5 ft joints, clean all joints =80 joints x 2.5 ft =200 feet of specialty cleaning). Equivalent joint length shall not be counted in addition to the length of a pipe segment, or portion thereof, where continuous Specialty Cleaning has been performed. Payment shall include all materials, labor, equipment, and supplies necessary for Specialty Cleaning of wastewater pipe, and specifically includes, but is not limited to, the complete removal and disposal of all accumulated debris within the pipe including grease, roots, joint sealant, tuberculation, and other adherent deposits through the use of special equipment, restoration, and all other appurtenant work as specified. Specialty Cleaning is in addition to Normal Cleaning as described in Pay Items 39 through 42.

PAY ITEM	DESCRIPTION	UNITS
43	Normal Cleaning – 6” and 8” Diameter	LF
44	Normal Cleaning – 10” and 12” Diameter	LF

45	Normal Cleaning – 15” and 18” Diameter	LF
46	Normal Cleaning – 21” and 24” Diameter	LF

PAY ITEMS NO. 47-49 – CHEMICAL SEALING OF HOST PIPE

Payment will be made per each host pipe for the applicable pipe diameters listed in the Bid Form, regardless of depth, overall length, or the number of infiltration points sealed. Measurement will be for a host pipe between manholes. Payment shall include all materials, labor, equipment and supplies necessary for the Chemical Sealing of Host Pipe, and specifically includes, but is not limited to, sealing excessive infiltration at pipe joints and other defects, disposal of debris, post-rehabilitation CCTV inspection video and log, restoration, and all other appurtenant work as specified. A separate Pay Item is provided Chemical Sealing - Grout material.

PAY ITEM	DESCRIPTION	UNITS
47	Chemical Sealing of Host Pipe – 10” Diameter and Less	EA
48	Chemical Sealing of Host Pipe – 12” and 15” Diameter	EA
49	Chemical Sealing of Host Pipe – 18” to 24” Diameter	EA

PAY ITEM NO. 50 – CHEMICAL SEALING - GROUT

Payment will be made per gallon. This Pay item is applicable only in conjunction with Pay Items 47 through 49. Payment shall include all materials, equipment and labor for chemically sealing excessive infiltration at pipe joints and other defects at specified locations for Chemical Sealing of Host Pipe prior to CIPP liner installation.

PAY ITEM NO. 51 – REMOVAL & SEALING OF PROTRUDING SERVICE CONNECTIONS

Payment will be made per each service regardless of the connection diameter or main pipe diameter. Payment shall include all materials, labor, equipment and supplies necessary for the Removal & Sealing of Protruding Connections, and specifically includes, but is not limited to, removing protruding lateral by internal cutting or other remote methods, grouting the main/lateral connection, disposal of debris, post-rehabilitation CCTV inspection video and log, restoration, and all other appurtenant work as specified.

PAY ITEM NO. 52 – ADDITIONAL ACCESS COST MAIN LINER

Payment for Additional Access Cost Main Liner will be made per each access. Measurement will be for a liner installation where both the upstream and downstream manhole are not readily accessible by standard equipment, e.g., when located in rear easements. Payment shall include all additional labor, equipment, materials and supplies to complete the CIPP Main Liner installation in locations with limited access. The Contractor shall attempt to schedule and stage the Work to permit the lining of multiple, contiguous pipe segments from an accessible manhole where feasible.

PAY ITEM NO. 53 – SERVICE RECONNECTION

Payment will be made per each service regardless of the connection diameter or host pipe diameter, and regardless of depth or overall length of the host pipe. Payment shall include all materials, labor, equipment, and supplies necessary for the service reconnection, and specifically includes, but is not limited to, reconnecting service lateral by internal cutting or other remote methods, grouting the annular space between the liner and host pipe at the lateral connection and the first 18-inches of the service lateral, post-rehabilitation CCTV inspection video and log, disposal of debris, restoration, and all other appurtenant work as specified. No additional payment will be made for service reconnections made by excavation.

PAY ITEM NO. 54 – CIPP LINER TESTING

Payment will be made per each test. Measurement will be for a set of tests completed for a liner installation and accepted by the Engineer. Payment shall include all materials, labor, equipment, supplies, and expenses necessary for CIPP Liner Testing, and specifically includes, but is not limited to, preparing samples, laboratory testing, submitting the results to the Engineer, and all other appurtenant work as specified. The cost to obtain and store samples for testing, and any retesting of samples is not included in this Pay Item.

WASTEWATER SYSTEM POINT REPAIRS

PAY ITEM NO. 1 – MOBILIZATION FOR ROUTINE RESPONSE

The work specified in this item consists of the preparatory work and operations in mobilizing for beginning work on the project This item includes, but is not limited to, those operations necessary for the movement of personnel, equipment, supplies and incidentals to and from the project site as a single occurrence per work site, and for the establishment of Subcontractor's temporary offices, buildings, safety equipment, first aid supplies, sanitary and other facilities, as required by these Specifications, special provisions, and State and local laws and regulations. The costs of bonds, permits and any required insurance, and any other preconstruction expense necessary for the start of the work, excluding the cost of construction materials, shall also be included in this item. Labor and equipment travel time from/to the site is included in this pay item.

For routine work, as identified by the Engineer or his designee, the Contractor will be required to respond to the request of the Engineer, or designated representative within ten (10) calendar days of notification. The Scope of Work will be developed by Project manager and will be executed in accordance with the terms and conditions of this contract.

The quantity of mobilization to be paid for under this item shall be measured as one unit each (EA) per job assignment. One (1) mobilization will be allowed for each job assignment, project, or work order no matter how many times the equipment must be relocated by loading, transporting and unloading, or under its own power to complete the job assignment or project.

PAY ITEM NO. 2 – MOBILIZATION FOR EMERGENCY RESPONSE

The work specified in this item consists of the preparatory work and operations in mobilizing for beginning work on the project This item includes, but is not limited to, those operations necessary for the movement of personnel, equipment, supplies and incidentals to and from the project site as a single occurrence per work site, and for the establishment of Subcontractor's temporary offices, buildings, safety equipment, first aid supplies, sanitary and other facilities, as required by these Specifications, special provisions, and State and local laws and regulations. The costs of bonds, permits and any required insurance, and any other preconstruction expense necessary for the start of the work, excluding the cost of construction materials, shall also be included in this item. Labor and equipment travel time from/to the site is included in this pay item.

For emergency work, as identified by the Engineer or his designee, the Contractor will be required to respond to the request of the Engineer, or designated representative within ten (10) calendar days of notification. The Scope of Work will be developed by Project manager and will be executed in accordance with the terms and conditions of this contract.

The quantity of mobilization to be paid for under this item shall be measured as one unit each (EA) per job assignment. One (1) mobilization will be allowed for each job assignment, project, or work order no matter how many times the equipment must be relocated by loading, transporting and unloading, or under its own power to complete the job assignment or project.

PAY ITEMS NO. 3 – 15 – MAINTENANCE OF TRAFFIC

This work consists of maintaining traffic within the limits of the project for the duration of the construction period, including any temporary suspensions of the work. All Maintenance of Traffic (MOT) shall comply with FDOT Standard Plans Index 102 Series for Maintenance of Traffic. These pay items shall include labor and equipment to furnishing, installing and maintaining of traffic control and safety devices during construction; the construction and maintenance of any necessary detour facilities; providing necessary facilities for access to residences, businesses, pedestrian, schools, etc., control of dust and any other special requirements for safe and expeditious movement of traffic as may be called for on the plans. MOT shall include all of such facilities, devices and operations as are required for the safety and convenience of the public, as well as for minimizing public nuisance. The Contractor, however, shall not obstruct nor create a hazard to any traffic during the performance of the work and shall be responsible for repair of any damage to existing pavement or facilities caused by his operations. Traffic Control Devices include all types of barricades, arrow boards, signs, temporary pavement markers, lights, concrete barriers and permanent striping. All travel, equipment, labor overhead or any other associated expenses in transportation and setting out the MOT will be included in the price. All MOT line items for Multi-Lane work shall include all costs for items associated with the appropriate FDOT Index (no separate payment for signs, barricades, etc. included with index will be allowed).

Maintenance of Traffic (MOT) shall be measured as units of work, each/day (EA/DY), hourly (HR) or by linear foot (LF) accordingly completed and priced on an individual project basis. The lump sum price for each assignment will be based on the specific MOT requirements for the assignment. The Contractor shall provide the Engineer with a proposal for the MOT that includes a breakdown of the costs, which are included in the lump sum price, and receive written acceptance from the Engineer prior to the installation of the MOT.

PAY ITEM	DESCRIPTION	UNITS
3	Flagmen (Per-Flagmen)	HR
4	Multi Lane, Lane Closures (FDOT Index No. 613)	EA/DY
5	Multi Lane, Intersection (FDOT Index No. 615)	EA/DY
6	Arrow Boards - 5' Minimum Horizontal Size	EA/DY
7	Variable Message Board	EA/DY
8	Concrete Barrier (FDOT Index No. 100)	EA/DY
9	Low Profile Barrier (FDOT Index No. 120)	EA/DY
10	Signs in Work Zones	EA/DY
11	6" Solid line Thermo Plastic - Permanent	LF
12	24" Stop Bar, Solid, Thermo Plastic, Perm.	LF
13	6" Skip line (6'-10' Skip) Thermo Plastic-Perm.	LF
14	Barricades Type III, with Warning Lights	EA/DY
15	Barricades Type I or II, with Warning Lights	EA/DY

PAY ITEM NO. 16 – AS-BUILT SURVEY

Payment for all work included, but is not limited to, under this Pay Item shall represent full

compensation in accordance with the lump sum price bid for as-built record drawings or any other required certifications to put the proposed system in service. All items are subject to approval by the Engineer.

The quantity to be paid for under this pay item shall per as-built survey completed by a professional surveyor based on the linear foot of sewer main installed.

PAY ITEM NO. 17 – EXCAVATION, UNSUITABLE MATERIAL

The work specified in this item describes the removal of soil unsuitable for a proper foundation, encountered at trench grade. The unsuitable soil shall be removed and disposed of the full width of the trench and to the depth required by the Engineer and replaced with approved bedding material. The backfill shall be thoroughly compacted and shaped to form the pipe bed.

The quantity to be paid for under this Item shall be the volume in cubic yards (CY), computed by the average end area method, of the unsuitable material removed within the limits of depth shown on the Plans or as directed by the Engineer or his representative.

PAY ITEMS NO. 18 & 19 – SHEETING AND BRACING, ADDITIONAL

The quantities to be paid for under this item shall be the number of square feet of sheeting installed in addition to 6’ of depth. The quantities to be paid for under this item shall be based on the square feet of sheeting installed and accepted.

PAY ITEM	DESCRIPTION	UNITS
18	Sheeting & Bracing (Left in Place)	SF
19	Sheeting & Bracing, Pipe Trenches (Removed)	SF

PAY ITEMS NO. 20 - 25 – WELL POINT DEWATERING INITIAL

Measurement and payment of this pay item is based on the set up of dewatering equipment as required by the Contractor and allowed or directed by the Engineer to perform contracted work in accordance with the Technical Specifications. The work shall include all labor, equipment and materials, testing, and any required incidentals necessary to completely install, monitor and operate the dewatering system including the placement of up to twenty (20) well points to the various depths listed in the proposal per job assignment. The dewatering system shall stabilize the excavation and remain in operation until backfilling operations are complete. This pay item shall include the maintenance, repairs, pumps, fueling, oiling greasing, and other operational support procedures and supplies required for the operation of the system.

Well point dewatering is an authorized pay item only when the installation is below 6 feet in depth and site conditions warrant or on emergency response work where site conditions warrant as directed by the City representative.

The quantities to be paid for under this item shall be based on the depth of each (EA) dewatering

system per job assignment, installed and accepted.

PAY ITEM	DESCRIPTION	UNITS
20	Well Point Dewatering Initial – 6'-8' Deep	EA
21	Well Point Dewatering Initial – 8'-10' Deep	EA
22	Well Point Dewatering Initial – 10'-12' Deep	EA
23	Well Point Dewatering Initial – 12'-14' Deep	EA
24	Well Point Dewatering Initial – 14'-16' Deep	EA
25	Well Point Dewatering Initial – >16' Deep	EA

PAY ITEMS NO. 26 – 31 – WELL POINT DEWATERING ADDITIONAL

This item provides all labor, materials and equipment for the placement and operation of additional well points over and above the twenty (20) well points paid for under Pay Items 20-25. The work includes connection of the well points to the dewatering pumping equipment.

The quantity to be paid under this item will be the actual number of each (EA) well points placed and operated in the work as directed by Engineer for the various depths listed in the proposal less the twenty (20) paid for under Pay Items 20-25.

PAY ITEM	DESCRIPTION	UNITS
26	Well Point Dewatering Additional – 6'-8' Deep	EA
27	Well Point Dewatering Additional – 8'-10' Deep	EA
28	Well Point Dewatering Additional – 10'-12' Deep	EA
29	Well Point Dewatering Additional – 12'-14' Deep	EA
30	Well Point Dewatering Additional – 14'-16' Deep	EA
31	Well Point Dewatering Additional – >16' Deep	EA

PAY ITEMS NO. 32 – 35 – JACK & BORE

The work consists of furnishing all labor, equipment and materials and installing the crossing listed on the Bid Form by the jack and bore method in accordance with the specifications. The unit price shall include all costs necessary to install the crossing at the specified depth and size, including survey layout (based upon property monuments established by others), protection of property, materials, dewatering, pavement cutting, launching and receiving pits, exploratory pits, restrained joints, carrier pipe, tracer wire, tracer wire testing, casing pipe, casing spacers, casing end seals, fitting material including joints and jointing material, bracing, utility crossings, barricades, clearing, grubbing and stripping of the right-of-way, trenching, bedding and backfilling, protection of existing utilities; pigging, flushing and cleaning, pressure testing and As-built documentation. Surface restoration if specified or directed, will be paid for under other Pay Items.

The quantity for furnishing and installing the pipe or casing shall be made on a per linear foot basis as measured horizontally above the centerline of the casing including the length of four (4) feet beyond the edge of pavement or back of the concrete curb from each side of the road or driveway.

PAY ITEM	DESCRIPTION	UNITS
32	Jack & Bore 12” x 0.188” Steel Casing (6” GS)	LF
33	Jack & Bore 16” x 0.219” Steel Casing (8” GS)	LF
34	Jack & Bore 20” x 0.250” Steel Casing (10” GS)	LF
35	Jack & Bore 24” x 0.281” Steel Casing (12” GS)	LF

PAY ITEMS NO. 36 – 41 – DIRECTIONAL DRILL

The work consists of furnishing and installing underground sewer mains using the horizontal directional drilling (HDD) method of installation. This work shall include all services, equipment, materials, labor, installation of two 14 gauge minimum tracer wires, tracer wire testing, appurtenances, DI/HDPE mechanical joint adapters, pipe and joint restraints for connections to fittings, materials above or below ground along pipeline alignment; joints and jointing materials, bentonite clay slurry seal, launching and receiving pits, exploratory pits; bracing, bedding and backfill, disposal of spoil; pressure testing; pigging, flushing, cleaning erosion protection and control, surface grading, and all other related and necessary materials for the complete and proper installation, testing, and restoration of underground sewer mains

Measurement for payment for furnishing and installing HDD pipe for drill depths up to 20-foot-deep shall be made on a per linear foot (LF) basis as measured horizontally on the ground above the pipe centerline through valves and fittings for all pipe. Measurement for payment for finishing and installation HDD pipe for drill depths greater than 20-foot depth shall be made on a per linear foot (LF) basis of the actual length of pipe installed.

PAY ITEM	DESCRIPTION	UNITS
36	2” Directional Drill HDPE DR 9, IPS	LF
37	4” Directional Drill HDPE DR 11, DIPS	LF
38	6” Directional Drill HDPE DR 11, DIPS	LF
39	8” Directional Drill HDPE DR 11, DIPS	LF
40	10” Directional Drill HDPE DR 11, DIPS	LF
41	12” Directional Drill HDPE DR 11, DIPS	LF

PAY ITEMS NO. 42 – 146 – GRAVITY SANITARY SEWER

The work consists of furnishing all labor, equipment and materials for installing pipe as shown on the plans or directed by the Engineer. All ductile iron pipe shall have polyethylene encasement. The unit price shall include all costs necessary to install the pipe including survey layout (based upon property monuments established by others), clearing and grubbing, excavation, sheeting/shoring for excavation up to 6-ft deep, bracing, dewatering for excavations up to 6-ft deep, structural fill, material, polyethylene wrap on ductile iron pipe, testing, pavement cutting, trenching, utility crossings, barricades, clearing of the right-of-way, protection of property, backfilling, field layout, etc. Restoration will be paid for under separate pay items. Work performed for Point Repairs of gravity sewer pipes will be paid for under separate pay items.

The quantities of pipe to be paid for under this item shall be the length in linear feet of pipe measured along the centerline of the pipe through manholes in place, completed, tested, and accepted.

PAY ITEM	DESCRIPTION	UNITS
42	6" PVC Pipe, C-900 DR 18 (Gravity Sewer) 0' - 6' Depth	LF
43	6" PVC Pipe, C-900 DR 18 (Gravity Sewer) 6' - 8' Depth	LF
44	6" PVC Pipe, C-900 DR 18 (Gravity Sewer) 8' - 10' Depth	LF
45	6" PVC Pipe, C-900 DR 18 (Gravity Sewer) 10' - 12' Depth	LF
46	6" PVC Pipe, C-900 DR 18 (Gravity Sewer) 12' - 14' Depth	LF
47	6" PVC Pipe, C-900 DR 18 (Gravity Sewer) 14' - 16' Depth	LF
48	6" PVC Pipe, C-900 DR 18 (Gravity Sewer) 16' - 18' Depth	LF
49	8" DI Pipe, CL 350 (Gravity Sewer) 0' - 6' Depth	LF
50	8" DI Pipe, CL 350 (Gravity Sewer) 6' - 8' Depth	LF
51	8" DI Pipe, CL 350 (Gravity Sewer) 8' - 10' Depth	LF
52	8" DI Pipe, CL 350 (Gravity Sewer) 10' - 12' Depth	LF
53	8" DI Pipe, CL 350 (Gravity Sewer) 12' - 14' Depth	LF
54	8" DI Pipe, CL 350 (Gravity Sewer) 14' - 16' Depth	LF
55	8" DI Pipe, CL 350 (Gravity Sewer) 16' - 18' Depth	LF
56	8" PVC Pipe, C-900 DR 18 (Gravity Sewer) 0' - 6' Depth	LF
57	8" PVC Pipe, C-900 DR 18 (Gravity Sewer) 6' - 8' Depth	LF
58	8" PVC Pipe, C-900 DR 18 (Gravity Sewer) 8' - 10' Depth	LF
59	8" PVC Pipe, C-900 DR 18 (Gravity Sewer) 10' - 12' Depth	LF
60	8" PVC Pipe, C-900 DR 18 (Gravity Sewer) 12' - 14' Depth	LF
61	8" PVC Pipe, C-900 DR 18 (Gravity Sewer) 14' - 16' Depth	LF
62	8" PVC Pipe, C-900 DR 18 (Gravity Sewer) 16' - 18' Depth	LF
63	10" DI Pipe, CL 350 (Gravity Sewer) 0' - 6' Depth	LF

64	10" DI Pipe, CL 350 (Gravity Sewer) 6' - 8' Depth	LF
65	10" DI Pipe, CL 350 (Gravity Sewer) 8' - 10' Depth	LF
66	10" DI Pipe, CL 350 (Gravity Sewer) 10' - 12' Depth	LF
67	10" DI Pipe, CL 350 (Gravity Sewer) 12' - 14' Depth	LF
68	10" DI Pipe, CL 350 (Gravity Sewer) 14' - 16' Depth	LF
69	10" DI Pipe, CL 350 (Gravity Sewer) 16' - 18' Depth	LF
70	10" PVC Pipe, C-900 DR 18 (Gravity Sewer) 0' -6' Depth	LF
71	10" PVC Pipe, C-900 DR 18 (Gravity Sewer) 6' - 8' Depth	LF
72	10" PVC Pipe, C-900 DR 18 (Gravity Sewer) 8' - 10' Depth	LF
73	10" PVC Pipe, C-900 DR 18 (Gravity Sewer) 10' - 12' Depth	LF
74	10" PVC Pipe, C-900 DR 18 (Gravity Sewer) 12' - 14' Depth	LF
75	10" PVC Pipe, C-900 DR 18 (Gravity Sewer) 14' - 16' Depth	LF
76	10" PVC Pipe, C-900 DR 18 (Gravity Sewer) 16' - 18' Depth	LF
77	12" DI Pipe, CL 350 (Gravity Sewer) 0' - 6' Depth	LF
78	12" DI Pipe, CL 350 (Gravity Sewer) 6' - 8' Depth	LF
79	12" DI Pipe, CL 350 (Gravity Sewer) 8' - 10' Depth	LF
80	12" DI Pipe, CL 350 (Gravity Sewer) 10' - 12' Depth	LF
81	12" DI Pipe, CL 350 (Gravity Sewer) 12' - 14' Depth	LF
82	12" DI Pipe, CL 350 (Gravity Sewer) 14' - 16' Depth	LF
83	12" DI Pipe, CL 350 (Gravity Sewer) 16' - 18' Depth	LF
84	12" PVC Pipe, C-900 DR 18 (Gravity Sewer) 0' ' 6' Depth	LF
85	12" PVC Pipe, C-900 DR 18 (Gravity Sewer) 6' - 8' Depth	LF
86	12" PVC Pipe, C-900 DR 18 (Gravity Sewer) 8' - 10' Depth	LF
87	12" PVC Pipe, C-900 DR 18 (Gravity Sewer) 10' - 12' Depth	LF

88	12" PVC Pipe, C-900 DR 18 (Gravity Sewer) 12' - 14' Depth	LF
89	12" PVC Pipe, C-900 DR 18 (Gravity Sewer) 14' - 16' Depth	LF
90	12" PVC Pipe, C-900 DR 18 (Gravity Sewer) 16' - 18' Depth	LF
91	16" DI Pipe, CL 350 (Gravity Sewer) 0' - 6' Depth	LF
92	16" DI Pipe, CL 350 (Gravity Sewer) 6' - 8' Depth	LF
93	16" DI Pipe, CL 350 (Gravity Sewer) 8' - 10' Depth	LF
94	16" DI Pipe, CL 350 (Gravity Sewer) 10' - 12' Depth	LF
95	16" DI Pipe, CL 350 (Gravity Sewer) 12' - 14' Depth	LF
96	16" DI Pipe, CL 350 (Gravity Sewer) 14' - 16' Depth	LF
97	16" DI Pipe, CL 350 (Gravity Sewer) 16' - 18' Depth	LF
98	16" PVC Pipe, C-905 DR 18 (Gravity Sewer) 0' - 6' Depth	LF
99	16" PVC Pipe, C-905 DR 18 (Gravity Sewer) 6' - 8' Depth	LF
100	16" PVC Pipe, C-905 DR 18 (Gravity Sewer) 8' - 10' Depth	LF
101	16" PVC Pipe, C-905 DR 18 (Gravity Sewer) 10' - 12' Depth	LF
102	16" PVC Pipe, C-905 DR 18 (Gravity Sewer) 12' - 14' Depth	LF
103	16" PVC Pipe, C-905 DR 18 (Gravity Sewer) 14' - 16' Depth	LF
104	16" PVC Pipe, C-905 DR 18 (Gravity Sewer) 16' - 18' Depth	LF
105	18" DI Pipe, CL 350 (Gravity Sewer) 0' - 6' Depth	LF
106	18" DI Pipe, CL 350 (Gravity Sewer) 6' - 8' Depth	LF
107	18" DI Pipe, CL 350 (Gravity Sewer) 8' - 10' Depth	LF
108	18" DI Pipe, CL 350 (Gravity Sewer) 10' - 12' Depth	LF
109	18" DI Pipe, CL 350 (Gravity Sewer) 12' - 14' Depth	LF
110	18" DI Pipe, CL 350 (Gravity Sewer) 14' - 16' Depth	LF
111	18" DI Pipe, CL 350 (Gravity Sewer) 16' - 18' Depth	LF
112	18" PVC Pipe, C-905 DR 21 (Gravity Sewer) 0' - 6' Depth	LF

113	18" PVC Pipe, C-905 DR 21 (Gravity Sewer) 6' - 8' Depth	LF
114	18" PVC Pipe, C-905 DR 21 (Gravity Sewer) 8' - 10' Depth	LF
115	18" PVC Pipe, C-905 DR 21 (Gravity Sewer) 10' - 12' Depth	LF
116	18 PVC Pipe, C-905 DR 21 (Gravity Sewer) 12' - 14' Depth	LF
117	18" PVC Pipe, C-905 DR 21 (Gravity Sewer) 14' - 16' Depth	LF
118	18" PVC Pipe, C-905 DR 21 (Gravity Sewer) 16' - 18' Depth	LF
119	21" DI Pipe, CL 350 (Gravity Sewer) 0' - 6' Depth	LF
120	21" DI Pipe, CL 350 (Gravity Sewer) 6' - 8' Depth	LF
121	21" DI Pipe, CL 350 (Gravity Sewer) 8' - 10' Depth	LF
122	21" DI Pipe, CL 350 (Gravity Sewer) 10' - 12' Depth	LF
123	21" DI Pipe, CL 350 (Gravity Sewer) 12' - 14' Depth	LF
124	21" DI Pipe, CL 350 (Gravity Sewer) 14' - 16' Depth	LF
125	21" DI Pipe, CL 350 (Gravity Sewer) 16' - 18' Depth	LF
126	21" PVC Pipe, C-905 DR 21 (Gravity Sewer) 0' - 6' Depth	LF
127	21" PVC Pipe, C-905 DR 21 (Gravity Sewer) 6' - 8' Depth	LF
128	21" PVC Pipe, C-905 DR 21 (Gravity Sewer) 8' - 10' Depth	LF
129	21" PVC Pipe, C-905 DR 21 (Gravity Sewer) 10' - 12' Depth	LF
130	21" PVC Pipe, C-905 DR 21 (Gravity Sewer) 12' - 14' Depth	LF
131	21" PVC Pipe, C-905 DR 21 (Gravity Sewer) 14' - 16' Depth	LF
132	21" PVC Pipe, C-905 DR 21 (Gravity Sewer) 16' - 18' Depth	LF
133	24" DI Pipe, CL 350 (Gravity Sewer) 0' - 6' Depth	LF
134	24" DI Pipe, CL 350 (Gravity Sewer) 6' - 8' Depth	LF
135	24" DI Pipe, CL 350 (Gravity Sewer) 8' - 10' Depth	LF
136	24" DI Pipe, CL 350 (Gravity Sewer) 10' - 12' Depth	LF

137	24" DI Pipe, CL 350 (Gravity Sewer) 12' - 14' Depth	LF
138	24" DI Pipe, CL 350 (Gravity Sewer) 14' - 16' Depth	LF
139	24" DI Pipe, CL 350 (Gravity Sewer) 16' - 18' Depth	LF
140	24" PVC Pipe, C-905 DR 21 (Gravity Sewer) 0' - 6' Depth	LF
141	24" PVC Pipe, C-905 DR 21 (Gravity Sewer) 6' - 8' Depth	LF
142	24" PVC Pipe, C-905 DR 21 (Gravity Sewer) 8' - 10' Depth	LF
143	24" PVC Pipe, C-905 DR 21 (Gravity Sewer) 10' - 12' Depth	LF
144	24" PVC Pipe, C-905 DR 21 (Gravity Sewer) 12' - 14' Depth	LF
145	24" PVC Pipe, C-905 DR 21 (Gravity Sewer) 14' - 16' Depth	LF
146	24" PVC Pipe, C-905 DR 21 (Gravity Sewer) 16' - 18' Depth	LF

PAY ITEM NO. 147 – INSTALL PVC CLEANOUT

The work consists of furnishing all labor, equipment, and materials for installation of a new PVC riser pipe and cleanout at the ROW line (or other location as directed by the Engineer) on existing sewer lateral. The existing sewer lateral material may be PVC, Vitrified Clay, or DIP pipe. The unit price shall include all costs necessary to install riser pipe and cleanout including survey layout (based upon property monuments established by others), material, polyethylene wrap on ductile iron pipe, fittings, pipe cutting, wye unit on main, installation of riser pipe and cleanout, pavement cutting, trenching, dewatering for excavations up to 6-ft deep, sheeting for excavations up to 6-ft deep, bracing, utility crossings, barricades, clearing of the right-of-way, protection of property, backfilling, field layout, restoration, sodding, etc. The pay item shall include cleanout installation up to ten (10) feet in depth.

The quantities of pipe to be paid for under this item shall be each measured and inspected in place, completed, and accepted.

PAY ITEM NO. 148 – REPLACE PVC CLEAN OUT WITH MANHOLE STRUCTURE

The work consists of furnishing all labor, equipment, and materials for the replacement of an existing PVC clean out with a concrete manhole. The unit price shall include all costs necessary to replace clean out including survey layout (based on property monuments established by others), material, fittings, pipe cutting, concrete manhole installation, pavement cutting, trenching, dewatering for excavations up to 6-ft deep, bracing, utility crossings, barricades, clearing of the right-of-way, protection of property, backfilling, field layout, restoration, sodding, etc. The pay item shall include the removal of clean outs and installation of manholes up to four (4) feet in depth.

The quantities of manholes to be paid for under this item shall be each measured and inspected in place, completed, and accepted.

PAY ITEMS NO. 149 – 153 – REMOVE PIPE (GRAVITY SEWER)

The work consists of furnishing all labor and equipment to remove and dispose of out of service mains. Unless otherwise indicted by the Engineer or his representative, the pipe removed becomes the property of the Contractor. The unit price shall include all costs necessary to remove the pipe (including fittings, valves, reverse deadmen, etc.) including pavement cutting, trenching, replacement of base material, dewatering for excavations up to 6- ft deep, sheeting for excavations up to 6-ft deep, bracing, utility crossings, barricades, clearing of the right-of-way, protection of property, backfilling, restoration of pavement and grass, etc.

The quantities of pipe removal to be paid for under this Item shall be the length in linear feet (LF) of pipe measured along the centerline of the pipe through valves and fittings actually removed.

PAY ITEM	DESCRIPTION	UNITS
149	Remove Pipe 2” or 4” (Gravity Sewer)	LF
150	Remove Pipe 6” or 8” (Gravity Sewer)	LF
151	Remove Pipe 10” or 12” (Gravity Sewer)	LF
152	Remove Pipe 15”, 16”, or 18” (Gravity Sewer)	LF
153	Remove Pipe 21” or 24” (Gravity Sewer)	LF

PAY ITEMS NO. 154 – 167 – INSTALL OR ADJUST SERVICE LATERAL

The work consists of furnishing all labor, equipment, by-pass operations, customer coordination and materials for installation of a new or relocating a sanitary sewer service lateral found to be in conflict with proposed improvement or as directed by the Engineer. The unit price shall include all costs necessary to install up 30 linear feet of service pipe including survey layout (based upon property monuments established by others), material, polyethylene wrap on ductile iron pipe, fittings, pipe cutting, wye unit on main, installation of riser pipe and cleanout at the ROW line, pavement cutting, trenching, dewatering for excavations up to 6-ft deep, sheeting for excavations up to 6-ft deep, bracing, utility crossings, barricades, clearing of the right-of-way, protection of property, backfilling, field layout, etc. Service pipe lengths in excess of 30 feet will be paid for as Gravity Sewer Pipe (Pay Items 41-145). Restoration will be paid for under separate pay items.

The quantities of pipe to be paid for under this item shall be each measured and inspected in place, completed, and accepted.

PAY ITEM	DESCRIPTION	UNITS
154	4" Pipe - Install or Adjust Service Lateral 0'-6' Deep	EA
155	4" Pipe - Install or Adjust Service Lateral 6'-8' Deep	EA
156	4" Pipe - Install or Adjust Service Lateral 8'-10' Deep	EA
157	4" Pipe - Install or Adjust Service Lateral 10'-12' Deep	EA

158	4" Pipe - Install or Adjust Service Lateral 12'-14' Deep	EA
159	4" Pipe - Install or Adjust Service Lateral 14'-16' Deep	EA
160	4" Pipe - Install or Adjust Service Lateral 16'-18' Deep	EA
161	6" Pipe - Install or Adjust Service Lateral 0'-6' Deep	EA
162	6" Pipe - Install or Adjust Service Lateral 6'-8' Deep	EA
163	6" Pipe - Install or Adjust Service Lateral 8'-10' Deep	EA
164	6" Pipe - Install or Adjust Service Lateral 10'-12' Deep	EA
165	6" Pipe - Install or Adjust Service Lateral 12'-14' Deep	EA
166	6" Pipe - Install or Adjust Service Lateral 14'-16' Deep	EA
167	6" Pipe - Install or Adjust Service Lateral 16'-18' Deep	EA

PAY ITEMS NO. 168 – 177 – SEWER LINE MANHOLE CONNECTION

The work consists of all labor, equipment, investigative digging, and materials for repair of an existing connection into manhole wall or to install a new connection. All core drills shall be of sufficient diameter to accommodate pipe connection. Manhole connections may be either gravity sewer or sewer forcemain. All connections shall include a water stop or boot connection. Payment shall also include core drills, masonry or concrete patching, fiberglass and interior surface patching, shoring, dewatering for excavations up to 6-ft deep, backfill, refill, compaction operations, and compaction testing or re-testing. All sewer forcemain connections shall include installation of a drop bowl, paid for under Pay Items 177-186. The work does not include excavation or surface restoration which, if required, will be paid for, or is part of the work, under other Pay Items.

The quantities of connections into manholes to be paid under this item shall be each measured in place, completed, inspected, and accepted.

PAY ITEM	DESCRIPTION	UNITS
168	2" Sewer Line Manhole Connection	EA
169	4" Sewer Line Manhole Connection	EA
170	6" Sewer Line Manhole Connection	EA
171	8" Sewer Line Manhole Connection	EA
172	10" Sewer Line Manhole Connection	EA
173	12" Sewer Line Manhole Connection	EA
174	16" Sewer Line Manhole Connection	EA
175	18" Sewer Line Manhole Connection	EA
176	21” Sewer Line Manhole Connection	EA
177	24” Sewer Line Manhole Connection	EA

PAY ITEMS NO. 178 – 187 – INSIDE DROP CONNECTION

This item provides for all labor, equipment and material to install a PVC drop connection inside an existing manhole. This work includes all interior piping, drop bowl and any masonry or concrete

and coatings patching required to complete a repair connection or install a new drop connection to an existing manhole in accordance with Technical Specifications.

The quantity to be measured for payment under this Pay Item will be the actual number each (EA) of manhole inside drop connections completed and accepted.

PAY ITEM	DESCRIPTION	UNITS
178	2" Inside Drop Connection	EA
179	4" Inside Drop Connection	EA
180	6" Inside Drop Connection	EA
181	8" Inside Drop Connection	EA
182	10" Inside Drop Connection	EA
183	12" Inside Drop Connection	EA
184	15"/16" Inside Drop Connection	EA
185	18" Inside Drop Connection	EA
186	21" Inside Drop Connection	EA
187	24" Inside Drop Connection	EA

PAY ITEM NO. 188 – GROUTING OUT OF SERVICE PIPE (FORCE MAIN)

This item provides for all labor, equipment and material to install chemical grout or flowable fill into an existing pipe to be abandoned. Prior to grout filling the line, the Contractor shall verify that no live services remain connected to the line. The underground conduit (pipe, waterline, sewer line, storm drain line, etc.) be completely filled with a low strength cement grout (or flowable fill). In order to achieve this, the grout to be pumped into the line shall have a consistency that will permit forced flow into the entire length of line. Blocking the line by intermediate excavation and gravity flow concrete or grout is NOT acceptable. The existing line to be grout filled shall be exposed and plugged with concrete bulkheads or plugs at both ends. The grout shall be pumped through the pipe until the grout is visible at the other end of the underground conduit. No more than 15 psi shall be used to pump the grout mixture, and care should be used to avoid grout filling adjoining voids.

The quantities of pipe to be paid for under this Item shall be the volume in cubic yards of the inside pipe area times the length of pipe. No payment will be made for material that escapes the pipe or ends enclosures.

PAY ITEMS NO. 189 – 191 – DISCONNECT & PLUG PIPE

The work consists of furnishing all labor, equipment and materials to disconnect and cap/plug sewer mains that will remain in or out of service. The unit price shall include all nuts, bolts, gaskets, caps/plugs, restraint devices, thrust blocks, cutting existing pipe, removal of valve boxes, blow-off assemblies, scheduling and notification of service interruptions and all other operations required to disconnect and cap/plug the water mains.

The quantity of disconnect and cap/plug water mains to be paid for under this item shall be the

number each (EA) measured in place, completed and accepted.

PAY ITEM	DESCRIPTION	UNITS
189	Disconnect & Plug 2" or 4" Pipe	EA
190	Disconnect & Plug 6" or 8" Pipe	EA
191	Disconnect & Plug 10" or 12" Pipe	EA

PAY ITEMS NO. 192 – 202 – SANITARY SEWER FORCE MAIN

The work consists of furnishing all labor, equipment and materials and installing sanitary forcemain pipe by the open-cut method in accordance with the specifications.

The unit price shall include all costs necessary to install the pipe up to 6 feet in depth, including: survey layout (based upon property monuments established by others); protection of property; protection of existing utilities, mailboxes and service connections; erosion protection (silt fence, hay bales, floating turbidity barriers, or other means, as required); materials, pavement cutting, extra pipe fitting material including joints/jointing material/restraints; shoring, sheeting for excavations up to 6-ft deep; bracing; utility crossings; barricades; clearing; grubbing and stripping of the right-of-way; trenching, bedding and backfilling; pigging; flushing and cleaning; pressure testing. Fittings shall be included in the cost of 2” pipe. Dual tracer wire and tracer wire testing shall be included in the price for PVC pipe items. Polyethylene encasement shall be included in the bid price for DI pipe items. Restoration will be paid for under separate pay items.

Additional payment will be made for extra depth installation over six feet under a separate pay item. Well point dewatering is an authorized pay item only when the installation is below 6 feet in depth and site conditions warrant; all dewatering up to 6 feet in depth is included in this pay item.

The quantities of pipe to be paid for under this Item shall be the length in linear feet of pipe measured along the centerline of the pipe in place, completed, tested, and accepted.

PAY ITEM	DESCRIPTION	UNITS
192	2" PVC Restrained Joint Pipe & Fittings FM, SDR 21	LF
193	4" PVC Pipe, C-900 DR 18 (Force Main)	LF
194	4" PVC Restrained Joint Pipe & Fittings FM, C-900 DR 18	LF
195	6" PVC Pipe, C-900 DR 18 (Force Main)	LF
196	6" PVC Restrained Joint Pipe & Fittings FM, C-900 DR 18	LF
197	8" PVC Pipe, C-900 DR 18 (Force Main)	LF
198	8" PVC Restrained Joint Pipe & Fittings FM, C-900 DR 18	LF
199	10" PVC Pipe, C-900 DR 18 (Force Main)	LF
200	10" PVC Restrained Joint Pipe & Fittings FM, C-900 DR 18	LF

201	12" PVC Pipe, C-900 DR 18 (Force Main)	LF
202	12" PVC Restrained Joint Pipe & Fittings FM, C-900 DR 18	LF

PAY ITEMS NO. 203 – 208 – RESTRAINED JOINTS

The work specified in this item describes measurement and payment for furnishing all labor, equipment and materials and installing restrained joint hardware including mechanical joint restrainers, bell restrainers and PVC restrainers complete including bolts, gaskets, rods, special flanges, color coded polyethylene encasement , testing, acceptance, and ready for service. Restrained joints for pipe associated with fittings per the design of new pipe shall be paid for under separate pay item. This item shall only be used to restrain existing in-service pipelines or to install additional restraints above the amount specified, as directed by the Engineer or his representative.
`

The quantities of retrained joints to be paid for under this item shall be the number of each (EA) measured in place and accepted. No restrained joint hardware or any part of a restrained joint hardware shall be included for payment under more than one Item.

PAY ITEM	DESCRIPTION	UNITS
203	2" Restrained Joints	EA
204	4" Restrained Joints	EA
205	6" Restrained Joints	EA
206	8" Restrained Joints	EA
207	10" Restrained Joints	EA
208	12" Restrained Joints	EA

PAY ITEMS NO. 209 – 211 - FORCE MAIN OVER DEPTH EXCAVATION

The work consists of furnishing all labor and equipment to excavate additional depth greater than 6 feet depth for installation of sewer forcemain pipe by the open-cut method in accordance with the specifications. The unit price shall include all costs necessary to excavate additional depth over 6 feet including: survey layout (based upon property monuments established by others); protection of property, existing utilities, mailboxes and service connections; erosion protection (silt fence, hay bales, floating turbidity barriers, or other means, as required); materials; pavement cutting; bracing; utility crossings; barricades; clearing; grubbing and stripping of the right-of-way; trenching, bedding; and backfilling. Well point dewatering and sheeting are authorized pay items when the installation is below 6 feet in depth and site conditions warrant.

Measurement for payment for excavating each additional foot of depth to install pipe or appurtenances shall be made on a per linear foot (LF) basis for each additional vertical foot of depth over 6 feet as measured horizontally above the pipe centerline through valves and fittings.

PAY ITEM	DESCRIPTION	UNITS
209	2"-4" Forcemain Pipe and Appurtenances - Over Depth Excavation	LF

210	6"-8" Forcemain Pipe and Appurtenances - Over Depth Excavation	LF
211	10"-12" Forcemain Pipe and Appurtenances - Over Depth Excavation	LF

PAY ITEMS NO. 212 – 214 – REMOVE OUT OF SERVICE PIPE (FORCE MAIN)

The work consists of furnishing all labor and equipment to remove and dispose of out of service mains. Unless otherwise indicted by the Engineer or his representative, the pipe removed becomes the property of the Contractor. The unit price shall include all costs necessary to remove the pipe (including fittings, valves, reverse deadmen, etc) including pavement cutting, trenching, replacement of base material, dewatering for excavations up to 6-ft deep, sheeting for excavations up to 6-ft deep, bracing, utility crossings, barricades, clearing of the right-of-way, protection of property, backfilling, etc. Restoration will be paid for under separate pay items.

The quantities of pipe removal to be paid for under this Item shall be the length in linear feet (LF) of pipe measured along the centerline of the pipe through valves and fittings actually removed.

PAY ITEM	DESCRIPTION	UNITS
212	Remove Out of Service Pipe 2" or 4" (Force Main)	LF
213	Remove Out of Service Pipe 6" or 8" (Force Main)	LF
214	Remove Out of Service Pipe 10" or 12" (Force Main)	LF

PAY ITEMS NO. 215 – 220 – SLEEVED CONNECTION

The work consists of furnishing all labor, equipment and materials for installing sleeve connections not included in other items. The unit price shall include notification of shutdown to property owners, establishing alignment, moving and aligning old and new pipe, cleaning and cutting old pipe, sterilization, restraint jointing materials, color-coded polyethylene encasement, and all other operations required to make the connection. All connections shall include the cost of the sleeve or coupling, joint restraints and removal & disposal of up to twenty feet of existing main. Valves, pipe, additional joint restraints on existing main and fittings for connections shall be paid for under separate pay items.

The quantities of sleeve connection to be paid for under this item shall be the number each measured in place, completed, tested, and accepted

PAY ITEM	DESCRIPTION	UNITS
215	2" Sleeved Connection	EA
216	4" Sleeved Connection	EA
217	6" Sleeved Connection	EA
218	8" Sleeved Connection	EA
219	10" Sleeved Connection	EA
220	12" Sleeved Connection	EA

PAY ITEMS NO. 221 – 223 – REVERSE DEADMAN

The work covered by this item consists of reverse deadman installation for mains up to 12 inch in diameter. The installation shall include the corresponding size restrained joint as shown in the standard detail. This pay item includes: the furnishing of all materials and for the proper installation of the reverse deadman in strict accordance with the appropriate pipe specifications, excavation, erosion protection and control, backfill, dewatering for excavations up to 6-ft deep, sheeting for excavations up to 6-ft deep, shoring, surface grading, disposal of water, appropriate sized joint restraint, and concrete, all tools, equipment, labor, and materials necessary to install the reverse deadman as shown, specified or required for the proper completion of the work. Concrete shall cure for 72 hours or as determined by concrete mix design before applying force.

The quantities of reverse dead-man construction to be paid under this item shall be each measured in place, inspected, cured, and accepted.

PAY ITEM	DESCRIPTION	UNITS
221	Reverse Deadman for 2" or 4" Pipe	EA
222	Reverse Deadman for 6" or 8" Pipe	EA
223	Reverse Deadman for 10" or 12" Pipe	EA

PAY ITEM NO. 224 – DUCTILE IRON FITTINGS

The work consists of furnishing all labor, equipment and materials for installing ductile iron fittings not included in other items. All fittings shall include and be installed with joint restraints. The unit price includes furnishing and installing all fittings and materials above or below ground along the pipeline alignment; joints, joint restrainers, and jointing materials; bracing, shoring, and sheeting; dewatering, clearing, grubbing, and stripping; trenching, bedding and backfill; constructing the specified protection and adjusting of existing above ground and underground utilities and service connections; disposal of spoil; color coded polyethylene encasement; pressure testing; erosion protection and control, and all other related and necessary materials, work and equipment required to construct a complete, operable pipeline. The cost of furnishing and installing joint restraints shall be included in the unit price for Ductile Iron Fittings.

The quantities of ductile iron fittings to be paid for under this Item shall be the weight of the fitting required as established weight per fitting, including bolts, in tons (2,000 pounds) measured in place, completed, tested, and accepted. The weight of gaskets, jointing materials, etc., shall not be included in the computation of ductile iron fitting tonnage.

PAY ITEMS NO. 225 & 226 – 2” SS 316 AIR RELEASE VALVE ASSEMBLIES

The work consists of installing 2” SS 316 air release assemblies on sanitary sewer force mains. The unit bid price shall include installing the air release assembly, testing, excavation, backfill, bracing, shoring, sheeting for excavations up to 6-ft deep, dewatering for excavations up to 6-ft deep, surface grading, erosion protection and control, furnishing and installing tap saddle, tap, corporation stop, ball corporation, curb stop, automatic air release valve, enclosure, testing, miscellaneous brass nipples and fittings, and incidental items required to install a new assembly

as shown on the standard detail. All assemblies shall include tracer wire access, drainage gravel and miscellaneous nipples and fittings as shown in the standard details, filter fabric, valve identification tags, paint reference stripe on curb, painting of valve cover and meter boxes.

Measurement shall be on an individual basis for each (EA) assembly installed and accepted.

PAY ITEM	DESCRIPTION	UNITS
225	2" SS 316 Air Release Assembly (Underground)	EA
226	2" SS 316 Air Release Assembly (Aboveground)	EA

PAY ITEMS NO. 227 – 232 – RESILIENT WEDGE GATE VALVE

The work consists of furnishing all labor, equipment and materials for installing a valve not included in other items. The unit bid price includes furnishing and installing valves, valve boxes and covers, color coded polyethylene encasement, tracer wire access, filter fabric, valve identification tags, paint reference stripe on curb, painting of valve cover, concrete valve box pad, extension stems, joint restraints, pressure testing, excavation, backfill, dewatering for excavations up to 6-ft deep, sheeting for excavations up to 6-ft deep, shoring, surface grading and incidental construction associated with these items.

The quantities of valves to be paid for under this Item shall be the number each measured in place, completed, tested, and accepted.

PAY ITEM	DESCRIPTION	UNITS
227	2" RWGV (Resilient Wedge Gate Valve) & Box	EA
228	4" RWGV & Box C 515	EA
229	6" RWGV & Box C 515	EA
230	8" RWGV & Box C 515	EA
231	10" RWGV & Box C 515	EA
232	12" RWGV & Box C 515	EA

PAY ITEMS NO. 233 & 234 – ADJUST VALVE BOX TO FINISHED GRADE

The work consists of furnishing all labor, equipment, and materials for the vertical adjustment of an existing valve box and cover to match proposed finish grade. The unit price shall include placement of the valve cover to finish grade as shown on plans or directed by the Engineer.

the quantity of valve box and cover adjustments to be paid for under this item shall be the number each measured in place, on grade, inspected, and accepted.

PAY ITEM	DESCRIPTION	UNITS
233	Adjust Valve Box to Finished Grade (In Pavement)	EA
234	Adjust Valve Box to Finished Grade (Outside of Pavement)	EA

PAY ITEMS NO. 235 – 239 – LINE STOPS

The work consists of furnishing all labor, equipment and materials, including but not limited to dewatering for excavations up to 6-ft deep, excavation, sheeting for excavations up to 6-ft deep, shoring, preliminary measurements of the pipe prior to ordering the saddle, installing concrete cradle and support, line stop tapping sleeve, valve, and performing line stop installation with and for the duration of the new valve installation, pressure testing of tap saddle/sleeve, polyethylene wrap, and valve box for constructing a line stop on an existing sewer main and the adjustment of its valve box to finish grade. If a by-pass line stop installation is required, the by-pass piping will be paid for under line items for piping.

The quantities of Line Stops to be paid for under this Item shall be the number each measured in place, completed, tested, and accepted.

PAY ITEM	DESCRIPTION	UNITS
235	4" Line Stop	EA
236	6" Line Stop	EA
237	8" Line Stop	EA
238	10" Line Stop	EA
239	12" Line Stop	EA

PAY ITEMS NO. 240 – 259 – TAPPLING SLEEVE/SADDLE VALVE & BOX

The work consists of the installation of tapping saddle or sleeve and associated valves. The quantity to be paid for under this item is the number of connections acceptably installed. Cut in tee and valve may be required in some locations due to utility conflicts and will be paid for as equal sized tap. The unit bid price includes all materials and installation from the point of connection to the main line including scheduling and notification of service interruptions, furnishing and installing tapping saddle, color coded polyethylene encasement, valves, taps, fittings, piping, joint restraints, valve boxes and covers, concrete valve box pads, valve extension stems, tracer wire access, valve identification tags, filter fabric, paint reference stripe on curb, painting of valve box cover, excavation, erosion protection and control, backfill, dewatering for excavations up to 6-ft deep, sheeting for excavations up to 6-ft deep, shoring, surface grading, disposal of water, pressure testing and all other related, necessary, and incidental materials, work and equipment required to complete the connection. All joints shall be restrained.

The quantities of valves/taps to be paid for under this Item shall be the number each measured in place, completed, tested, and accepted.

PAY ITEM	DESCRIPTION	UNITS
240	4" x 2" Tapping Saddle Valve & Box	EA
241	4" x 4" Tapping Sleeve Valve & Box	EA
242	6" x 2" Tapping Saddle Valve & Box	EA
243	6" x 4" Tapping Sleeve Valve & Box	EA
244	6" x 6" Tapping Sleeve Valve & Box	EA

245	8" x 2" Tapping Saddle Valve & Box	EA
246	8" x 4" Tapping Sleeve Valve & Box	EA
247	8" x 6" Tapping Sleeve Valve & Box	EA
248	8" x 8" Tapping Sleeve Valve & Box	EA
249	10" x 2" Tapping Saddle Valve & Box	EA
250	10" x 4" Tapping Sleeve Valve & Box	EA
251	10" x 6" Tapping Sleeve Valve & Box	EA
252	10" x 8" Tapping Sleeve Valve & Box	EA
253	10" x 10" Tapping Sleeve Valve & Box	EA
254	12" x 2" Tapping Saddle Valve & Box	EA
255	12" x 4" Tapping Sleeve Valve & Box	EA
256	12" x 6" Tapping Sleeve Valve & Box	EA
257	12" x 8" Tapping Sleeve Valve & Box	EA
258	12" x 10" Tapping Sleeve Valve & Box	EA
259	12" x 12" Tapping Sleeve Valve & Box	EA

PAY ITEMS NO. 260 – 269 – MANHOLES

The work consists of furnishing all labor, equipment, by-pass operations, customer coordination and materials for constructing a sanitary sewer manhole at location shown on plans or as directed by the Engineer. The unit price shall include all costs necessary to construct the manhole including survey layout (based upon property monuments established by others), material, pavement cutting, trenching, replacement of base material, dewatering for excavations up to 6-ft deep, sheeting for excavations up to 6-ft deep, bracing, utility crossings, barricades, clearing of the right-of-way, protection of property, and backfilling. The depth of the manhole will be measured from the top of the cover down to the invert of the outlet sewer pipe. Excavation and well point dewatering for pipeline Manhole installations are separate pay items.

The quantities of manholes to be paid under this item shall be vertical feet of depth measured in place, completed, inspected, and accepted.

PAY ITEM	DESCRIPTION	UNITS
260	4' Dia. - Precast Manhole Standard	VF
261	4' Dia. - Precast Manhole Inside Drop	VF
262	4' Dia. - Precast Manhole Outside Drop	VF
263	5' Dia. - Precast Manhole Standard	VF
264	5' Dia. - Precast Manhole Inside Drop	VF
265	5' Dia. - Precast Manhole Outside Drop	VF
266	5' Dia. - Precast Air Release Manhole	VF
267	6' Dia. - Precast Manhole Standard	VF
268	6' Dia. - Precast Manhole Inside Drop	VF
269	6' Dia. - Precast Manhole Outside Drop	VF

PAY ITEM NO. 270 – REMOVAL OF EXISTING MANHOLE

This work item shall provide all labor, equipment and materials for the removal of existing manholes up to four feet in depth and plugging of existing lines with brick and mortar. The work does not include excavation, surface restoration, sheeting, MOT, or well point dewatering which, if required, will be paid for under other Pay Items.

The quantity to be measured for payment under this Pay Item will be the actual number of manhole removals completed and accepted up to four (4) feet in depth.

PAY ITEM NO. 271 – REMOVAL OF EXISITING MANHOLE ADDITIONAL

The work consists of all work contained in Pay Item Remove Existing Manholes and provides for manhole removal for depths greater than four (4') feet deep.

The quantity to be measured for payment under this Pay Item will be the actual length in vertical feet of additional manhole removal in the work less the four (4) feet paid for under other Pay Items

PAY ITEMS NO. 272 – 279 – INITIAL EXCAVATION

The work consists of furnishing all labor, equipment, materials, traffic control and supervision necessary for the excavation exposing up to 30 linear feet of existing sanitary sewer gravity or forcemain pipe as measured along the pipe in a horizontal plane. The unit price shall contain all costs necessary to expose the pipe, temporary sheeting/shoring/bracing up to 6-ft deep, dewatering, well point dewatering up to 6' deep, crushed stone, stabilization and protection of existing utilities, property protection, backfilling, compaction, and all other related and necessary materials required to expose the pipe to be repaired in accordance with the Contract Documents. There shall be one Initial Excavation per work site unless otherwise approved by the Engineer. The following items, if required or as determined by the Engineer, will be paid for under other Contract Pay Items: pipeline point repair, pipeline offset relocation, select backfill material, well point dewatering, by-pass pumping, surface restoration, sheeting for excavations greater than 6-ft deep, and pavement restoration.

The quantity to be paid for under this item shall be the actual number of each (EA) per job assignment for initial excavation made in conjunction with exploration or pipe repair at the various cut ranges listed. The cut for Initial Excavation shall be the average of the pipe cut (grade elevation minus the pipe invert elevation) measured at each end of the trench, which measures 30 feet in length or less in conjunction of pipeline point repair or relocation offset.

PAY ITEM	DESCRIPTION	UNITS
272	Initial Excavation - 0'-6' Deep	EA
273	Initial Excavation - 6'-8' Deep	EA
274	Initial Excavation - 8'-10' Deep	EA
275	Initial Excavation - 10'-12' Deep	EA
276	Initial Excavation - 12'-14' Deep	EA
277	Initial Excavation - 14'-16' Deep	EA
278	Initial Excavation - 16'-18' Deep	EA
279	Initial Excavation - 18'-20' Deep	EA

PAY ITEMS NO. 280 – 287 – ADDITIONAL EXCAVATION

The work consists of furnishing all labor, equipment, materials, traffic control and supervision necessary for the excavation to expose existing pipe as measured in the horizontal plane in excess of the original 30 linear feet included in Initial Excavation pay item. This Pay Item is applicable only in conjunction with, and includes the same work as listed in Pay Items 271-278.

Measurement of payment shall be the actual number of linear feet (LF) per job assignment for additional excavations made in conjunction with exploration of pipeline point repair or relocation offset.

PAY ITEM	DESCRIPTION	UNITS
280	Additional Excavation - 0'-6' Deep	LF
281	Additional Excavation - 6'-8' Deep	LF
282	Additional Excavation - 8'-10' Deep	LF
283	Additional Excavation - 10'-12' Deep	LF
284	Additional Excavation - 12'-14' Deep	LF
285	Additional Excavation - 14'-16' Deep	LF
286	Additional Excavation - 16'-18' Deep	LF
287	Additional Excavation - 18'-20' Deep	LF

PAY ITEMS NO. 288 – 295 – BYPASS PUMPING SETUP & OPERATION

This item provides for set up and operation of by-pass sewage pumping equipment and temporary piping as required and as described in the Standard Technical Specifications. This Pay Item is applicable on projects or repairs that have high flow or require an over night by pass operation.

The quantity to be measured for payment under this Pay Item will be the actual number of by-pass pumping set ups and operations, per part of day, required by the Engineer in the work. The minimum measurement for this pay item is eight (8) hours or 0.333 days and is measured from the time that the sewage is actually by-passed. This eight (8) hour minimum (0.333 days) includes full compensation for set up and operation for up to the first eight (8) hour period. Additional time will be in tenths of the day or twenty-four (24) hour period. The quantities determined shall be paid per day (DAY) or portion of day of by-pass pumping set up and operation.

PAY ITEM	DESCRIPTION	UNITS
288	Wastewater Bypass Pumping, Set up, 6" - 10" diameter	EA
289	Wastewater Bypass Pumping, Set up, 12" - 14" diameter	EA
290	Wastewater Bypass Pumping, Set up, 15" - 21" diameter	EA
291	Wastewater Bypass Pumping, Set up, 24" diameter	EA
292	Wastewater Bypass Pumping, Operation, 6" - 10" diameter	DAY

293	Wastewater Bypass Pumping, Operation, 12" - 14" diameter	DAY
294	Wastewater Bypass Pumping, Operation, 15" - 21" diameter	DAY
295	Wastewater Bypass Pumping, Operation, 24" diameter	DAY

PAY ITEMS NO. 296 – 311 – GRAVITY SEWER POINT REPAIR

This item provides all labor, equipment and materials for the replacement of up to twenty (20) linear feet of gravity sewer pipe with PVC or Ductile Iron pipe (Material as directed by the Engineer at each occurrence). The existing sewer pipe may be Vitrified Clay, PVC, Ductile Iron, Cast Iron, or Concrete gravity sewer main. The work includes repair sleeves, cutting existing pipe, pipe bedding, new replacement pipe, disposal of existing pipe, and reconnection of lateral connections to sewer main. This item also includes maintaining of flow in low flow systems that can be accomplished with up to a four (4) inch mud hog, diaphragm or centrifugal type pump and lay flat hose or temporarily blocking the sewer for a period of time to facilitate the repair. The cost of lengths of pipe greater than twenty (20) linear feet will be paid for under Pay Items 209-324. The work does not include sheeting or well point dewatering which, if required, will be paid for, or is part of the work, under other Pay Items.

The quantity to be paid under this item will be in accordance with each (EA) pipe size to be repaired as noted in the contract pay items.

PAY ITEM	DESCRIPTION	UNITS
296	6" Dia. Pipe Gravity Sewer Point Repair (DI Replacement Pipe)	EA
297	6" Dia. Pipe Gravity Sewer Point Repair (PVC Replacement Pipe)	EA
298	8" Dia. Pipe Gravity Sewer Point Repair (DI Replacement Pipe)	EA
299	8" Dia. Pipe Gravity Sewer Point Repair (PVC Replacement Pipe)	EA
300	10" Dia. Pipe Gravity Sewer Point Repair (DI Replacement Pipe)	EA
301	10" Dia. Pipe Gravity Sewer Point Repair (PVC Replacement Pipe)	EA
302	12" Dia. Pipe Gravity Sewer Point Repair (DI Replacement Pipe)	EA
303	12" Dia. Pipe Gravity Sewer Point Repair (PVC Replacement Pipe)	EA
304	15"/16" Dia. Pipe Gravity Sewer Point Repair (DI Replacement Pipe)	EA
305	15"/16" Dia. Pipe Gravity Sewer Point Repair (PVC Replacement Pipe)	EA
306	18" Dia. Pipe Gravity Sewer Point Repair (DI Replacement Pipe)	EA

307	18" Dia. Pipe Gravity Sewer Point Repair (PVC Replacement Pipe)	EA
308	21" Dia. Pipe Gravity Sewer Point Repair (DI Replacement Pipe)	EA
309	21" Dia. Pipe Gravity Sewer Point Repair (PVC Replacement Pipe)	EA
310	24" Dia. Pipe Gravity Sewer Point Repair (DI Replacement Pipe)	EA
311	24" Dia. Pipe Gravity Sewer Point Repair (PVC Replacement Pipe)	EA

PAY ITEMS NO. 312 – 327 – GRAVITY SEWER POINT REPAIR – ADDITIONAL LENGTH

This item provides all labor, equipment and materials for the additional length of replacement gravity sewer pipe with PVC or Ductile Iron pipe (Material as directed by the Engineer at each occurrence). This Pay Item provides for an additional thirty (30) feet of replacement pipe. This Pay Item is used only in conjunction with Pay Items 295-310 and contains the same work therein described. Pipe point repairs requiring greater than fifty (50) feet of pipe will be constructed under separate Contract Pay Items.

The quantity to be paid under this item will be in accordance with the linear feet (LF) installed above twenty (20) linear for each pipe size to be repaired as noted in the contract pay items.

PAY ITEM	DESCRIPTION	UNITS
312	6" Dia. Pipe Gravity Sewer Point Repair - Additional Length (DI Replacement Pipe)	LF
313	6" Dia. Pipe Gravity Sewer Point Repair - Additional Length (PVC Replacement Pipe)	LF
314	8" Dia. Pipe Gravity Sewer Point Repair - Additional Length (DI Replacement Pipe)	LF
315	8" Dia. Pipe Gravity Sewer Point Repair - Additional Length (PVC Replacement Pipe)	LF
316	10" Dia. Pipe Gravity Sewer Point Repair - Additional Length (DI Replacement Pipe)	LF
317	10" Dia. Pipe Gravity Sewer Point Repair - Additional Length (PVC Replacement Pipe)	LF
318	12" Dia. Pipe Gravity Sewer Point Repair - Additional Length (DI Replacement Pipe)	LF
319	12" Dia. Pipe Gravity Sewer Point Repair - Additional Length (PVC Replacement Pipe)	LF

320	15"/16" Dia. Pipe Gravity Sewer Point Repair - Additional Length (DI Replacement Pipe)	LF
321	15"/16" Dia. Pipe Gravity Sewer Point Repair - Additional Length (PVC Replacement Pipe)	LF
322	18" Dia. Pipe Gravity Sewer Point Repair - Additional Length (DI Replacement Pipe)	LF
323	18" Dia. Pipe Gravity Sewer Point Repair - Additional Length (PVC Replacement Pipe)	LF
324	21" Dia. Pipe Gravity Sewer Point Repair - Additional Length (DI Replacement Pipe)	LF
325	21" Dia. Pipe Gravity Sewer Point Repair - Additional Length (PVC Replacement Pipe)	LF
326	24" Dia. Pipe Gravity Sewer Point Repair - Additional Length (DI Replacement Pipe)	LF
327	24" Dia. Pipe Gravity Sewer Point Repair - Additional Length (PVC Replacement Pipe)	LF

PAY ITEMS NO. 328 – 333 – FORCE MAIN POINT REPAIR

This item provides all labor, equipment and materials for the replacement of up to ten (10) linear feet of pipe and may be used for routine response and emergency repairs at the discretion of the Engineer or his representative. The pipe being repaired may be PVC, HDPE, Ductile Iron, or Cast Iron. All ductile iron pipe shall have polyethylene encasement. The work includes furnishing and installing two full seal clamps, bell joint seal clamps or two solid sleeves, cutting existing pipe, pipe bedding, dewatering for excavations up to 6-ft deep, sheeting for excavations up to 6-ft deep, and disposal of existing pipe. Additional pipe materials over ten (10) linear feet in length will be paid for under Pay Items 191-201. Excavations and well point dewatering for pipeline point repairs are separate pay items.

The quantity to be paid under this item will be in accordance with each (EA) pipe size to be repaired as noted in the contract pay items.

PAY ITEM	DESCRIPTION	UNITS
328	2" Dia. Pipe Forcemain Point Repair	EA
329	4" Dia. Pipe Forcemain Point Repair	EA
330	6" Dia. Pipe Forcemain Point Repair	EA
331	8" Dia. Pipe Forcemain Point Repair	EA
332	10" Dia. Pipe Forcemain Point Repair	EA

333	12" Dia. Pipe Forcemain Point Repair	EA

PAY ITEMS NO. 334 & 335 – REPLACE MANHOLE RING AND COVER

This pay includes replacement of existing manhole rings and covers in roadway paved areas, or other areas, as directed by the Engineer. The work includes all labor, equipment and material for replacement of manhole rings and covers. The work does not include excavation or surface restoration which, if required, will be paid for, or is part of the work, under other Contract Pay Items.

The quantity to be measured for payment under this Pay Item will be the actual number each of manhole ring and covers replaced completed and accepted.

PAY ITEM	DESCRIPTION	UNITS
334	Replace Manhole Ring & Cover (Asphalt Pavement)	EA
335	Replace Manhole Ring & Cover (Unpaved)	EA

PAY ITEMS NO. 336 – 338 – MANOLE BENCH REPLACEMENT

This pay item includes the replacement of manhole benches and invert channels. The work includes all labor, equipment and material for rebuilding existing manhole inverts and benches as described in the Technical Specifications.

The quantity of manhole bench replacement to be measured for payment under this Pay Item will be the actual number each (EA) of manholes that have manhole inverts and benches rebuilt.

PAY ITEM	DESCRIPTION	UNITS
336	Manhole Bench Replacement, 4' Diameter	EA
337	Manhole Bench Replacement, 5' Diameter	EA
338	Manhole Bench Replacement, 6' Diameter	EA

PAY ITEMS NO. 339 & 340 – ADJUST MANHOLE RING AND COVER TO FINISHED GRADE

This item provides all labor, equipment and materials for adjusting existing manhole risers, frames, and covers. Adjustment includes removal of existing ring and cover and removal or placement of up to 6 courses of brick and reinstalling the existing ring and cover. The work does not include excavation, surface restoration, sheeting or well point dewatering which, if required, will be paid for, or is part of the work, under other Pay Items.

The quantities of manhole rim and cover adjustments to be paid under this item shall be each measured in place, on grade, inspected, and accepted.

PAY ITEM	DESCRIPTION	UNITS
339	Adjust Manhole Ring & Cover to Finished Grade (In Pavement)	EA

340	Adjust Manhole Ring & Cover to Finished Grade (Outside of Pavement)	EA

PAY ITEM NO. 341– FLOWABLE CONCRETE FILL

This item provides all labor, equipment, and materials for placing flowable fill per the Technical Specifications. The quantity of Flowable Concrete Fill to be paid under this item shall be per cubic yard measured in place, inspected, and accepted.

PAY ITEMS NO. 342 – 346 - PAVEMENT REPAIR AND ROAD RESTORATION

This item provides all labor, equipment, and materials for the installation of roadway base and surface course per the Technical Specifications and Contract Drawings. Replacement base material shall be the same as the existing base. Measurement will be based on the actual number of cubic yards of Roadway Base and tons of Superpave Asphalt base and concrete installed, tested, completed, and approved. The weight of the Superpave asphalt base and concrete shall be determined from batch weights, truck scale weights or other methods approved by the Engineer. Delivery tickets, in duplicate, signed by a sworn weigher, must accompany each load of material to the project site. One copy of the delivery ticket must be retained by the Contractor and one copy must be delivered to the City Inspector. The total number of tons reflected in one set of all delivery tickets collected by the Inspector must be the measured pay quantity.

PAY ITEM	DESCRIPTION	UNITS
342	Roadway Base, Lime Rock, Primed, Min. LBR 100, Variable Thickness	CY
343	Roadway Base, Crushed Concrete/Graded Aggregate, Min. LBR 100, Variable Thickness	CY
344	Superpave Asphalt Base, Type B 12.5, Variable Thickness	TN
345	Superpave Asphalt Concrete, Type SP 9.5, Fine, Traffic Level C, Variable Thickness	TN
346	Superpave Asphalt Concrete, Type SP 12.5, Fine, Traffic Level C, Variable Thickness	TN

PAY ITEMS NO. 347 - 349 – DRIVEWAY RESTORATION

Payment for all work included under this Pay Item will be made at the Contract unit price bid per square yard of driveway installed as shown in the Contract Drawings and as listed on the Bid Form. Measurement will be based on the actual number of square yards of driveway installed, tested, completed and approved. Payment shall represent full compensation for all labor, materials and equipment for cutting the edges of existing driveways, compacting subgrade, furnishing and installing the shell, asphaltic concrete, concrete, or decorative block and all incidentals necessary to complete the driveway restoration as shown on the Contract Drawings and included in the Specifications. No payment for restoration of a private driveway outside the right-of-way shall be made under this Pay Item.

PAY ITEM	DESCRIPTION	UNITS
347	Pavement, Cement Concrete, 6" Min Thickness (Driveways)	SY
348	Pavement, Cement Concrete, 8" Thick	SY
349	Driveway Restoration, In Kind, Decorative Block	SY

PAY ITEMS NO 350 - 352 – MILLING OF EXISTING ASPHALT

Payment for all work included under this Pay Item will be made at the Contract unit price bid per square yard of asphalt milling within the Contract Drawings and as listed on the Bid Form. Measurement will be based on the actual number of square yards of milling installed, tested, completed and approved. The measurement will be from face of curb to face of curb or as specified, but not greater than the width of the existing roadway prior to construction. Payment will include the milling of the asphaltic concrete in accordance with these Specifications. No payment for milling of a private driveway within or outside the right-of-way shall be made under this Pay Item.

PAY ITEM	DESCRIPTION	UNITS
350	Milling Existing Asphalt Pavement, 1/2" Average Depth	SY
351	Milling Existing Asphalt Pavement, 3/4" Average Depth	SY
352	Milling Existing Asphalt Pavement, 1" Average Depth	SY

PAY ITEMS NO. 353 – 356 – CURB AND GUTTER REPLACEMENT

Payment for all work included in this Pay Item will be made at the applicable Contract unit price bid per linear foot for removal of existing curbing and for furnishing and placing FDOT Type D or F curb and gutter, Miami curb, or Valley gutter as shown on the Contract Drawings and listed on the Bid Form. Measurement will be per actual number of linear feet of curbing installed. Payment shall represent full compensation for removal of existing curb and all labor, material and equipment for compacting subgrade, forming, furnishing, placing the concrete, and finishing as specified and all incidentals necessary for completion of this Pay Item, in accordance with FDOT specifications.

PAY ITEM	DESCRIPTION	UNITS
353	Curb & Gutter, Concrete, FDOT Type D	LF
354	Curb & Gutter Concrete, FDOT Type F	LF
355	Curb & Gutter, Concrete, Miami Curb	LF
356	Valley Gutter, Concrete, PCED Index 1315	LF

PAY ITEMS NO. 357 & 358 – CONCRETE SIDEWALKS

Payment for all work included under this Pay Item will be made at the Contract unit price bid per square foot of concrete sidewalk installed as shown in the Contract Drawings and as listed on the

Bid Form. Measurement of sidewalk restoration will be per the actual number of square feet of sidewalk replaced. Payment shall represent full compensation for all labor, materials and equipment for cutting the edges of existing concrete, compacting subgrade, furnishing and installing the concrete and all incidentals necessary to complete the sidewalk restoration as shown on the Contract Drawings in accordance with FDOT Specifications where applicable.

PAY ITEM	DESCRIPTION	UNITS
357	Sidewalk, Concrete, 4" Min. Thickness, Remove and Replace	SF
358	Sidewalk, Concrete, 6" Min. Thickness, Remove and Replace	SF

PAY ITEM NO. 359 – SODDING

Payment for all work included under this Pay Item will be made at the Contract unit price bid per square yard of sod installed as shown in the Contract Drawings and as listed on the Bid Form. Measurement of sodding will be per the actual number of square yards of sod installed. Payment shall represent full compensation for all labor, materials and equipment for furnishing and installing the sod and all incidentals necessary to complete the work as shown on the Contract Drawings in accordance with FDOT Specifications where applicable.

END OF SECTION

THIS PAGE INTENTIONALLY LEFT BLANK

SECTION 3 - SUBMITTALS

3.01 GENERAL

When used in the Contract Documents, the term "Shop Drawings" shall be considered to mean Contractor's plans for material and equipment which become an integral part of the Project. These drawings shall be complete and detailed. Shop Drawings shall consist of fabrication, drawings, setting drawings, schedule drawings, manufacturer's scale drawings and wiring and control diagrams. Cuts, catalogs, pamphlets, descriptive literature and performance and test data, shall be considered only as supportive to required Shop Drawings as defined above.

Data on materials and equipment shall include, without limitation, materials and equipment lists, catalog sheets, cuts, performance curves, diagrams, materials of construction and similar descriptive material. Materials and equipment lists shall give, for each item thereon, the name and location of the supplier or manufacturer, trade name, catalog reference, size, finish and all other pertinent data. Submittal distribution will be by electronic submittal as coordinated during the Preconstruction Conference.

3.02 CONTRACTOR RESPONSIBILITIES

The Contractor shall submit to the City and Engineer for review and acceptance: working drawings, shop drawings, test reports and data on materials and equipment, and material samples (hereinafter in this section called samples) as are required for the proper control of work, including, but not limited to those working drawings, shop drawings, data and samples for materials and equipment specified elsewhere in the Specifications and in the Contract Drawings.

Drawings and schedules shall be checked and coordinated with the work of all trades involved before they are submitted for review by the City and the Engineer and shall bear the Contractor's stamp of approval and original signature as evidence of such checking and coordination. Drawings or schedules submitted without this stamp of approval and original signature shall be returned to the Contractor for resubmission.

If drawings show variations from Contract requirements because of standard shop practice or for other reasons, the Contractor shall describe such variations in his letter of transmittal. If acceptable, proper adjustment in the contract shall be implemented where appropriate. If the Contractor fails to describe such variations, he shall not be relieved of the responsibility of executing the work in accordance with the Contract, even though such drawings have been reviewed.

For all mechanical and electrical equipment furnished, the Contractor shall provide a list including the equipment name and address and telephone number of the manufacturer's representative and service company so that service and/or spare parts can be readily obtained.

All manufacturers or equipment suppliers who proposed to furnish equipment or products shall submit an installation list to the City along with the required shop drawings. The installation list shall include at least five installations where identical equipment has been installed and have been in operation for a period of at least one (1) year.

No materials or equipment shall be ordered, fabricated or shipped or any work performed until the Engineer reviews and returns to the Contractor the submittals as acceptable according to the

submittal review codes in Section 3.04.

3.03 SUBMITTAL NUMBERING

When submitting shop drawings or samples, utilize a unique numbering system of the Contractors choice. Subsequent resubmittals of a revised submittal shall be denoted with a letter, A-Z, indicating the resubmission of the same drawing (i.e. A=2nd submission, B=3rd submission, C=4th submission, etc.).
An example of a submittal numbering would be as follows: Submittal No. 5A - HDPE Pipe 6.03

1. 5A is the second submission of the 5th shop drawing submitted for the project
2. HDPE Pipe is the subject of the submittal
3. 6.05 is the Specification Section for HDPE Pressure Pipe

3.04 SUBMITTAL REVIEW

Submittals shall be transmitted in sufficient time to allow the Engineer at least twenty (20) working days for review and processing. The review of shop drawings, data and samples will be for general conformance with the design concept and Contract Documents. An acceptance of a submittal shall be interpreted to mean that the Engineer has no specific objections to the submitted material, subject to conformance with the Contract Drawings and Specifications. This is not to be construed as permitting any departure from the Contract requirements, relieving the Contractor of responsibility for any errors, including details, dimensions, and materials, or approving departures from details furnished by the City, except as otherwise provided herein.

Submittals will be returned to the Contractor under one (1) of the following codes:

A. "NO EXCEPTIONS TAKEN" is assigned when there are no notations or comments on the submittal. When returned under this code the Contractor may release the equipment and/or material for manufacture.
B. "CORRECTIONS NOTED". This code is assigned when a confirmation of the notations and comments IS NOT required by the Contractor. The Contractor may release the equipment or material for manufacture; however, all notations and comments must be incorporated into the final product.
C. "REVISE AND RESUBMIT". This code is assigned when notations and comments are extensive enough to require a resubmittal of the package. The Contractor may release the equipment or material for manufacture; however, all notations and comments must be incorporated into the final product. This resubmittal is to address all comments, omissions and non-conforming items that were noted. Resubmittal is to be received by the Engineer within 15 Calendar Days of the date of the Engineer's transmittal requiring the resubmittal.
D. “REJECTED" is assigned when the submittal does not meet the intent of the Contract Documents. The Contractor must resubmit the entire package revised to bring the submittal into conformance. It may be necessary to resubmit using a different manufacturer/vendor to meet the Contract Documents.
E. “Filed as Received” is assigned when the submittal is for informational purposes only. No review or comments will be provided by the Engineer.

END OF SECTION

SECTION 4 – AS-BUILT DRAWINGS

4.01 MINIMUM AS-BUILT DRAWING STANDARDS FOR ALL AS-BUILT DRAWINGS

For all elements of construction, As-Built Drawings shall be submitted to at least the level of detail in the contract documents. It is anticipated that the original contract documents shall serve as at least a background for all record information. Original drawings in CAD format may be requested by the City.

Project data points shall contain both horizontal and vertical data relative to the FL Florida State Plane, West Zone, US Foot. Vertical datum is NAVD 1988. All elevations shall be in feet and tenths, referenced to NAVD 1988. Each sheet of the As-Built Drawings shall have the title “AS-BUILT DRAWING” printed in large bold lettering near the title block and a date corresponding to the date the as-built drawing was issued. As-Built Drawings notes, and information shall be bold or italics to identify them as As-Built information.

4.02 AS-BUILT DRAWINGS PREPARATION

The As-Built Drawings shall show the name, address, and phone number of the Contractor. Each drawing shall be certified by a responsible representative of the Contractor and dated. As-built information shall be recorded currently with construction progress and work shall not be concealed until required information is recorded. Properly prepared As-Built Drawings shall be certified by a Professional Engineer or Surveyor registered to the state of Florida, employed by the Contractor.

The As-Built Drawings shall at a minimum legibly include the following:

A. All underground piping with elevations and dimensions. Changes to piping location. Horizontal and vertical locations of underground utilities and appurtenances referenced to permanent surface improvements. Actual installed pipe material, size, class, etc.

B. Locations of drainage ditches, swales, water lines and force mains shall be shown every 200 feet (measured along the centerline). Dimensions at these locations shall indicate distance from centerline of right-of-way to the facility.

C. All horizontal locations, if not in the right-of-way, must relate to easement.

D. Field changes of dimension and detail.

E. Changes made by Field Order or by Change Order.

F. Details not on original Contract Drawings.

G. Equipment and piping relocations.

H. Locations of all valves, air release valves, fire hydrants, manholes, water and sewer services, water and force main fittings, underdrain cleanouts, catch basins, junction boxes

and any other structures located in the right-of-way or easement, shall be located by elevation and by station and offset based on intersection P.I.'s and centerline of right-of-way. For facilities located on private roads, the dimensioning shall be from centerline of paving or another readily visible baseline.

I. Elevations shall be provided for all manhole rim and inverts; junction box rim and inverts; catch basin rim and inverts; and baffle, weir and invert elevations in control structures. Elevations shall also be provided at the PVI's and at every other lot line or 200 feet, whichever is less, of drainage swales and ditches. Benchmarks and elevation datum shall be indicated.

J. Slopes for pipes and ditches shall be recalculated, based on actual field measured distances, elevations, pipe sizes, and type shown. Cross section of drainage ditches and swales shall be verified.

K. Centerline of roads shall be tied to right-of-way lines. Elevation of roadway centerline shall be given at PVI's and at all intersections.

L. As-Built Drawings shall show bearings and distances for all right-of-way and easement lines, and property corners.

M. Sidewalks, fences, and walls, if installed at the time of initial as-built drawing submittal, shall be located every 200 feet or alternate lot lines, whichever is closer. Dimensions shall include distance from the right-of-way line and the back of curb and lot line or easement line.

N. Allowable tolerance shall be ± 6.0 inches for horizontal dimensions. Vertical dimensions such as the difference in elevations between manhole inverts shall have an allowable tolerance of ± 1/8 inch per 50 feet (or part thereof) of horizontal distance up to a maximum tolerance of ± 2 inch.

Specifications and Addenda shall be legibly marked to record manufacturer, trade name, catalog number and supplier of each product and item of equipment actually installed and changes made by Field Order or by Change Order.

4.02.01 REQUIREMENTS FOR RECLAIMED WATER MAINS AND FORCE MAINS

In addition to that specified above, the following information shall be provided on the As-Built Drawings.

A. Location (vertical and any horizontal) at intervals not to exceed two hundred (200) feet and at all locations where the direction changes by more than ten (10) degrees.

B. Pipe size, material, and dimension ratio.

C. Location of air release valve.

D. Detailed location of valves (horizonal).

E. Elevations shall be provided on the top of operating nuts for all water and force main valves.

F. Reclaimed water service connection location based on distance from main line and property line for each designed meter.

G. Horizontal Directional Drilling (HDD) locations and elevations shall be shown on the As-Built Drawings. The beginning, ending, and surface locations shall be indicated as well as the horizontal and vertical location at least every 25 linear feet along the pipe as provided in the HDD Contractor's certified report and bore log.

All top of pipe elevations shall be accompanied by a finished grade elevation at the same location. Horizontal location of the pipe shall be defined using ties to back of curb and nearest property corner, property line or permanent control point.

4.02.02 REQUIREMENTS FOR GRAVITY SEWER

In addition to that specified above, the following information shall be provided on the As-Built Drawings.

A. Manhole rim and invert elevations (include pipe inverts).

B. Manhole horizontal location (i.e. dimension from right-of-way line or permanent control point.)

C. Service laterals located from the nearest downstream manhole. These dimensions shall be provided by on-site inspections or televising of the sewer following installation.

D. Distance between manholes.

Size and material of all pipe.

4.02.03 REQUIREMENTS FOR WASTEWATER PUMP/LIFT STATIONS

In addition to that specified above, the following information shall be provided on the As-Built Drawings.

A. Location ties back to back of curb and nearest property corner or permanent control point.

B. Wet well invert elevations.

C. Pipe invert elevations.

D. Valve vault inverts.

E. Top of slab elevations.

F. Pump make and model, horsepower, impellor size, design point.

G. Operating set point elevations

4.03 AS-BUILT DRAWINGS SUBMITTAL

Prior to substantial completion and prior to starting the bacteria testing of water lines, Contractor shall deliver electronic As-Built Documents and As-Built Drawings to the City and the Engineer for review. If there are any required changes or additions, these shall be completed and resubmitted for review. Signed and sealed As-Built Documents and As-Built Drawings shall be submitted prior to final pay application to the City and the Engineer, both electronically and in hard copy paper format. Up to six (6) copies shall be provided at the City's request.

The Contractor shall employ a Professional Engineer or Surveyor registered in the State of Florida to verify survey data and properly prepare As-Built Drawings. As-Built Drawings shall be certified by the professional(s) (Engineer or Surveyor licensed in Florida), as stipulated by the Land Development Ordinance and submitted in electronic format and up to six (6) hardcopies signed and sealed by a Florida registered surveyor and mapper.

AutoCAD drawings shall be in DWG or DXF form. All fonts, line types, shape files, external references, or other pertinent information used in the drawing and not normally included in AutoCAD shall be included on the media with a text file or attached noted as to its relevance and use.

Accompany submittal with transmittal letter, containing:

A. Date.
B. Project title.
C. Contractor's name and address.
D. Title and number of each As-Built Document.
E. Signature of Contractor or his authorized representative.

Note: The data required to properly prepare these As-Built Drawings shall be obtained at the site, at no cost to the City by the responsible design professional or his/her duly appointed representative. The appointed representative shall be a qualified employee of the responsible design professional or a qualified inspector retained by the responsible design professional on a project-by-project basis.

END OF SECTION

SECTION 5 - CONCRETE, MASONRY, AND REINFORCING STEEL

5.01 GENERAL

The Work in this section includes furnishing, placing, finishing, and curing all reinforced and plain concrete, prestressed concrete, reinforcing steel, welded wire fabric, brick, masonry block, mortar, and related work. Brick used for paving and hexagon block used for sidewalks are not included in this section.

5.02 PORTLAND CEMENT CONCRETE

Portland cement concrete shall conform to the applicable requirements of the FDOT-SSRBC Sections 346, 347, and 921.

Class IV concrete shall be used for all concrete in contact with, or over, salt or brackish water.

Concrete used for structures in contact with sewage shall be mixed from Type II Portland cement containing the lowest calcium thiosulfate available as specified in AASHTO M 85.

Concrete shall meet the following minimum 28-day compressive strength:

Miscellaneous concrete (thrust blocks, pipe encasement, etc.)	2,500 psi
Concrete curb/gutter/sidewalk/pavement	3,000 psi
Cast-in-place/precast structures	4,000 psi
Prestressed structures	5,000 psi

5.03 REINFORCING STEEL

Reinforcing steel shall conform to ASTM A 615, Grade 60 deformed bars and to the applicable requirements of FDOT-SSRBC Sections 415 and 931.

Reinforcing steel shall not be coated, except as specifically specified on the Contract Drawings.

All welded wire fabric shall conform to ASTM A 497 (deformed) or ASTM A 185 (plain) and to the applicable requirements of FDOT-SSRBC Article 415-6.

5.04 FIBROUS CONCRETE REINFORCEMENT

Fibrous concrete reinforcement may be used, where shown or approved, in lieu of welded wire fabric for shrinkage and thermal contraction/expansion in concrete pavement, driveway, and sidewalk.

Fibrous concrete reinforcement shall conform to ASTM C 1116, ASTM C 94, and ASTM E 119-83.

Fibrous concrete reinforcement shall be 100 percent virgin polypropylene fibrillated material mixed with concrete at a minimum of 1.5 pounds per cubic yard of concrete.

5.05 PLACEMENT OF REINFORCEMENT

Reinforcing steel placement shall conform to the applicable requirements of FDOT-SSRBC Articles 350-7 and 415-5.

The following minimum concrete cover shall be provided for all reinforcement:

Concrete cast against and permanently exposed to earth	3-inch
Concrete exposed to earth or weather	
Primary reinforcement	2-inch
Stirrups, ties, and spirals	1 1/2-inch
Concrete deck slabs, top and bottom	2-inch
Concrete not exposed to earth or weather	
Primary reinforcement	1 1/2-inch
Stirrups, ties, and spirals	1-inch

For bundled bars, the minimum concrete cover shall be equal to the equivalent diameter of the bundle, but need not be greater than 2-inch, except against and permanently exposed to earth, in which case the minimum cover shall be 3-inch.

Minimum concrete cover shall be increased in corrosive environment areas.

5.06 PLACEMENT OF CONCRETE

Placement of Portland cement concrete shall conform to the applicable requirements of FDOT-SSRBC Article 400-7.

Unless specific permission is granted prior to each occurrence, no concrete shall be delivered to the job site before 7:30 a.m. or after 4:30 p.m. No concrete shall be placed until the reinforcing steel placement has been inspected and approved by the Engineer.

5.07 CURING OF CONCRETE

Curing of Portland cement concrete shall conform to the applicable requirements of FDOT-SSRBC Article 520-8.

5.08 FINISHING OF CONCRETE

Finishing of Portland cement concrete shall conform to the applicable requirements of FDOT-SSRBC Article 400-15.

5.09 CONCRETE BRICK

Concrete brick for use in drainage structures and where shown on the Contract Drawings shall be approximately 3 5/8-inch by 7 5/8-inch by 2 1/4-inch in size and shall conform to ASTM C 55, Grade N-II or S-II.

5.10 CLAY BRICK

Brick shall be sound, hard, and uniformly burned regular and uniform in shape and size or compact texture and conforming to ASTM C 32, "Specification for Sewer and Manhole Brick (Made from Clay or Shale) Grade MS or MM."

5.11 MASONRY BLOCK

Load bearing units shall be hollow or solid, as shown on the Contract Drawings, and shall conform to ASTM C 90, Type I, 8-inch by 16-inch or 4-inch by 16-inch nominal face dimension.

Non-load bearing units shall conform to ASTM C 129, Type I, 8-inch by 16-inch or 4-inch by 16-inch nominal face dimension.

Horizontal continuous joint reinforcement shall be provided at every other joint. Reinforcement shall be a minimum of #9 gage steel, Grade 50. Wire shall be hot-dip galvanized, conforming to ASTM A 153, Class B-2 (1.5 ounce per square foot of wire surface) for zinc coating after prefabrication into units. Mortar coverage shall be not less than 5/8-inch on joint faces exposed to exterior, and not less than 1/2-inch elsewhere.

5.12 MORTAR

Mortar shall consist of a mixture of cementitious materials, aggregate, and water. All proportions shall be by volume and/or weight. Masonry cement shall conform to ASTM C 91 and C 270. Fine aggregate and Portland cement shall conform to the applicable requirements of FDOT-SSRBC Sections 902 and 921 respectively. Mortar shall have a minimum compressive strength of 1,500 psi.

5.13 GROUT

Grout shall be identical to mortar in all respects.

END OF SECTION

THIS PAGE INTENTIONALLY LEFT BLANK

SECTION 6 – EXCAVATION AND BACKFILL

6.01 GENERAL

The Work in this section includes furnishing all labor, materials, tools, and equipment for excavation and backfill of roadways, sidewalks, curbs, driveways, pipelines, and structures. The Work also includes removing and disposing of leftover material and furnishing and placing off-site fill.

Bidders shall examine the site of the Work, make their own additional soil borings and tests, and make their own determination of the character of materials and the conditions to be encountered on the Work; their Bid shall be based upon their own investigation.

6.02 TRENCH SAFETY

The Contractor shall be responsible for maintaining safety at each excavation. The Contractor shall adhere to the Florida Trench Safety Act (FS 90-96), OSHA trench excavation safety standards (29 CFR, Subpart P, 1926.650), and OSHA trench excavation shielding, sloping, or sheeting requirements. Inspections required by OSHA trench excavation safety standards shall be provided by the Contractor's "competent person," as defined by OSHA 29 CF, Subpart P, 1926. The Contractor's "competent person" shall be identified at the Preconstruction Conference.

The Contractor certifies by submitting the bid and subsequently executing this Contract, that all trench excavation done within his control shall be accomplished in strict adherence with OSHA trench safety standards, the Florida Trench Safety Act, and public safety.

The Contractor also agrees to produce or obtain, prior to award of the subcontracts, identical certification from subcontractors who will perform trench excavation, and to retain such certification for at least 3 years following Final Acceptance.

The Contractor shall consider all available geotechnical information when designing the trench excavation safety system. If sufficient geotechnical information is not available, the Contractor may obtain such to support the requirements set forth above, at no additional cost to the City.

6.03 WORK IN WETLANDS, MANGROVES, AND PRESERVATION AREAS

Strict adherence to all permits is required. Damage to wetlands, periodically wet areas, mangroves, and preservation areas is prohibited. Any such damage by the Contractor shall be duly rectified at no additional cost to the City and as approved by the regulatory agencies.

6.04 CLEARING AND GRUBBING

All clearing and grubbing Work shall conform to all applicable requirements of FDOT-SSRBC Section 110 "Clearing and Grubbing" except as modified herein.

The Contractor shall remove only those trees and bushes necessary to complete the specified Work. Not all the trees and bushes have been located or shown on the Contract Drawings. The Contractor shall flag those trees and bushes to be removed. All other trees and bushes shall be protected per Specifications.

All roots, stumps, and other debris shall be removed to a depth not less than 12 inches below a bearing surface. The disturbed surface shall be backfilled, graded, and compacted as specified.

No tree or bush shall be removed without the review and acceptance of the Engineer. The Contractor shall obtain all necessary City or County permits for each tree to be removed. Tree removal shall conform to the provisions of the Specifications.

6.05 ROADWAY EXCAVATION

The extent of excavation shall be as shown on the Contract Drawings or otherwise approved by the City and shall include roadway excavation and/or filling and grading, together with the removal of trees, bushes, existing asphalt, concrete, or other material, as required to facilitate construction and restoration as directed by the City.

All excavation Work shall conform to all applicable requirements of FDOT-SSRBC Section 120 “Excavation and Embankment” except as modified herein.

6.06 TRENCH EXCAVATION

Mechanical excavation shall be terminated at least 2 inches above the proposed pipe bed and trench bottom, then shaped and compacted so as to provide uniform bearing on the barrel of the pipe. Particular care shall be taken to recess the bottom of the trench at the bell of the pipe to relieve the bell of all load.

A minimum trench width shall be maintained, allowing room for the jointing and proper compaction of the backfill. If material is encountered that is unsuitable in the opinion of the Engineer, it shall be removed by the Contractor and replaced with acceptable material compacted in place as specified. In the event the Contractor excavates below the elevation required without approval, the Contractor shall backfill with approved materials compacted to obtain a suitable trench bottom, all to the satisfaction of the Engineer and at no additional cost to the City.

The amount of open trench shall be limited so that no more than 100 feet of open trench in advance of the backfilling operation will remain at the end of that working day. All open trench shall be protected by the Contractor with barriers, warning devices, and traffic control devices, which shall be kept in the correct position, properly directed, anchored when required, and clearly visible at all times. The barriers, warning devices, and traffic control devices shall be suitably lighted at all times when vehicular traffic lights are required.

6.07 STRUCTURE EXCAVATION

Excavation shall be of the size and depth required for construction of structures and their foundations. Unsuitable material encountered shall be removed to the depth required to obtain sound foundation material or as ordered by the Engineer. Over-excavated areas shall be filled with approved backfill material compacted as specified, at no additional cost to the City.

Unsuitable existing soil shall be removed and replaced with compacted material, as approved by the Engineer and as specified in the subsection herein headed "Excavation of Unsuitable Material."

6.08 EXCAVATION OF UNSUITABLE MATERIAL

Unsuitable material shall include rock, concrete, and boulders. Unsuitable soft material shall include logs, muck, other soft soils, organic soils, and other soils as specified or as ordered by the Engineer to be unsuitable.

All excavation of unsuitable material shall conform to all applicable requirements of FDOT-SSRBC Section 120 “Excavation and Embankment” except as modified herein.

Unsuitable material encountered below or within the roadway stabilized subgrade, the trench bottom, or a structure bottom, shall be removed by the Contractor to the limits established by the Engineer and disposed of from the Work area at an approved disposal area. Unsuitable material shall be replaced with approved material and compacted as specified.

No additional payment will be made for backfill material obtained from any source and used to replace any unsuitable material except as otherwise specified.

6.09 SHEETING, SHIELDING, AND SLOPING

All excavations shall be properly sheeted, shielded, or sloped to the required slope to furnish safe working conditions, to prevent shifting of material, to prevent damage to structures or other Work, and to avoid delay to the Work, all in accordance with applicable safety and health regulations. The minimum sheeting and shielding for trench excavations shall meet the general trenching requirements of the Florida Trench Safety Act and OSHA standards.

The sheeting and shielding shall be of adequate strength and quantity for the purpose intended. Any sheeting extending below the level of above the top of pipeline shall be cut off as ordered by the Engineer and left in place. In addition, the Engineer may order the Contractor to cut off and leave in place any sheeting, shielding, or other approved support where required to protect construction, property, or existing facilities or utilities.

Damages resulting in the installation or removal of sheet piling shall be rectified by the Contractor at no additional cost to the City.

6.10 DEWATERING

A. All pipeline and appurtenances shall be laid entirely in a dry trench. All foundations and structure walls shall be constructed or installed in a dry excavation.

B. Before commencing any excavation at the site of the Work, the Contractor shall submit to the Engineer for review, the methods, equipment, and arrangement of facilities proposed for dewatering and disposal of water at the site and of all water entering any excavation or other part of the Work from any source whatsoever.

C. Water discharged from dewatering equipment shall be carried into surface drainage facilities except water quality treatment systems and shall not be discharged into sanitary sewer lines. The Contractor shall prevent water from puddling in streets or on private properties. The depositing of dirt in storm drains and ditches and staining of existing facilities shall not be permitted.

D. Adequate standby facilities shall be provided to ensure that the excavation will be kept dry in the event of power failure or mechanical breakdown. Facilities for the removal and disposal of water shall be of sufficient capacity to keep the excavation dry under all circumstances with one-half of the facilities out of service. If well points are used, provision shall be made for removing and resetting individual well points without taking the system of which they are a part out of service.

E. The City reserves the right to require the Contractor to replace noisy equipment in order to keep disturbance to a minimum.

F. The cost of dewatering and disposal of water shall be included in the unit quantity for each appropriate item bid.

G. Refer to the Specifications for requirements concerning encountered groundwater contaminates.

6.11 BORROW MATERIAL

Any borrow excavation Work shall consist of the excavation and satisfactory utilization of material from areas provided by the Contractor when necessary material is not available from the normal excavation or grading operations. This Work shall conform to DOT-SSRBC Section 120 “Excavation and Embankment” except as modified herein.

If additional fill material is required, it shall be City approved material supplied and compacted by the Contractor. All compaction under roadway, alley, driveway, curb, walk, or other improved surface shall be to a density as specified in the Contract Documents. Unless otherwise directed by the City, all material not required for construction shall be removed from the premises and disposed of by the Contractor.

6.12 BEDDING MATERIAL

A. Where shown, ordered, or required, the Contractor shall place bedding material prior to placing pipelines, structures, or slabs. Bedding material may be either excavated approved native sand, concrete sand, gravel, or reclaimed concrete.

B. Off-site bedding material shall be sand or gravel. Sand bedding material shall be a clean concrete sand of uniform gradation between sieve sizes No. 4 and No. 50. All particles shall pass a 3/8-inch sieve and no particles shall pass a No. 100 sieve.

C. Gravel bedding material shall meet the requirements of ASTM C33 and shall be coarse aggregate, DOT Size No. 67 (3/4-inch to No. 4) or approved equal.

D. Reclaimed concrete bedding material shall be graded to meet the size requirements as specified for gravel bedding.

E. Bedding material, where required, shall be placed in lifts and compacted in a manner to achieve the specified density as specified and/or as shown.

F. If gravel bedding is used, an impermeable groundwater barrier shall be placed at 100-foot intervals in the gravel bedding. The impermeable groundwater barrier shall consist of a 10

mil sheet of polyethylene covering the full cross sectional area of the gravel, embedded 6 inches into the trench sides and bottom, and extending to the top of the gravel. The barrier shall be offset a minimum of 2 feet from any culvert or pipe joint. Ends and splice points shall be lapped a minimum of 12 inches.

6.13 STRUCTURAL SLAB BEDDING

Structural slabs for manhole bases, footings, and similar structures shall be placed on approved compacted bedding material and leveled as specified and/or as shown.

6.14 BACKFILL MATERIAL

Backfill material shall consist of earth, loam, sandy clay, sand, gravel, soft shale, or other materials, free from organic materials, large clods of earth, or stones. Backfill material shall be either soil classification A-1, A-2 or A-3, per AASHTO M-145, and shall be free of organic matter, lumps of clay or marl, muck, compressible materials, and rock exceeding 2.5 inches in diameter. Broken concrete, masonry, rubble or other similar materials shall not be used as backfill.

6.15 BACKFILL COMPACTION

All backfill shall be compacted as specified herein and shall meet the following minimum density as determined by the AASHTO T-180 method for backfill outside the right-of-way and in City streets, and by the AASHTO T-99 method if in County or FDOT right-of-way.

AASHTO T-180 Method C or D will be used for stabilized subgrade and base compaction tests, and Method A or B will be used for backfill testing, or as directed by the Engineer or jurisdiction.

	T-180	T-99
Roadway stabilized subgrade	98%	N/A*
Roadway base	98%	N/A*
Curb base	98%	N/A
Sidewalk and driveway base	98%	N/A
Pipe bedding	98%	100%
Pipe backfill - under pavement	98%	100%
Pipe backfill - under grass	95%	100%
Structure base slabs	100%	N/A
Structure backfill	98%	N/A

*Roadway stabilized subgrade and base material shall meet LBR requirements as specified in the Contract Documents.

6.16 BACKFILLING OF TRENCH

Backfilling shall be accomplished with suitable material and shall commence only after the pipelines have been laid and tentatively accepted by the City. The space between the pipe and the sides of the trench shall be packed full by hand-shoveled earth free from lumps or debris.

The backfill material shall be placed in 6-inch lifts and compacted, using approved tampers to the required compaction, to a point 12 inches over the top of the pipe. The remaining backfill (under areas other than roadways) shall be placed in uniform lifts not greater than 12 inches thick (or less as approved for mechanical equipment available) and tamped to the required compaction. Backfill under roadways shall be compacted in 6-inch lifts.

Where trenches are improperly backfilled, or where settlement occurs, the trenches shall be reopened to the depth required for proper compaction, refilled and compacted, and the surface restored to the grade and compaction, mounded over and smoothed off.

6.17 BACKFILLING STRUCTURES

Backfill around structures shall be of suitable job-excavated material, suitable off-site fill material, or other material approved by the Engineer. Such backfill shall extend from the bottom of the excavation or top of bedding to the bottom of pavement base course, the bottom of the subgrade for lawns or lawn replacement, the top of the existing ground surface, or to such other grades as may be shown or required.

The backfill shall be placed in uniform lifts not greater than 12 inches thick, and thoroughly compacted in place.

6.18 BACKFILLING UNDER ROADWAYS

Backfill placed under roadways and other paved surfaces shall be compacted in 6 -inch lifts and thoroughly compacted in place, with suitable equipment as specified herein.

6.19 DISPOSING OF LEFTOVER MATERIAL

The Contractor shall bring the surface to the same level as existed prior to the excavation. All leftover material shall be hauled from the site and disposed of by the Contractor. Leftover material shall not be stored in or along rights-of-way or easements.

6.20 ADJACENT FACILITIES

The Contractor shall be responsible for the protection, removal, and replacement of all adjacent structures, utilities, trees, shrubbery, curbs, culverts, headwalls, fences, signs, and other miscellaneous structures encountered during the course of the Work.

6.21 TEMPORARY SUPPORTS

Temporary supports for 16-inch and larger pressure and gravity pipes shall be designed by the Contractor and submitted to the City as required by Specifications. Temporary supports that include a structural beam, or other such member(s), shall be designed, signed and sealed by a Professional Engineer.

6.22 FLOWABLE FILL

Where shown on the Contract Drawings, or where ordered by the Engineer, the Contractor shall backfill a void area or an excavation with flowable fill. Flowable fill may be shown, or ordered, to fill

abandoned pipes, abandoned underground steel storage tanks, trench backfill, washout area under structural slabs or behind walls, or other similar locations.

Flowable fill shall be produced and delivered to the site. Placing of flowable fill shall be by chute, pumping, or other approved methods. Flowable fill shall be placed to the designated fill line without vibration. The Contractor shall take all necessary precautions to prevent any damage caused by hydraulic pressure of the fill during placement prior to hardening. Flowable fill shall not be used for pipe bedding and backfill in the zone from the bottom of a pipe to 12 inches above the top of pipe.

Flowable fill shall consist of materials conforming to FDOT-SSRBC Sections as follows:

Cement (Type I or II)	Section 921	"Portland Cement and Blended Cement"
Fly ash (Type F)	Section 929	"Fly Ash, Slag, Microsilica and Other Pozzolanic Materials for Portland Cement Concrete"
Fine aggregate (sand)	Section 902	"Fine Aggregate"
Water	Section 923	"Water for Concrete"

The Contractor shall submit a proposed design mix that will produce a flowable fill meeting the strength requirements specified herein, using the following materials:

	Pounds per cubic yard
Cement (Type I or II)	50 - 200
Fly ash (Type F)	0 - 2,000
Fine aggregate (sand)	2,500 - 3,000
Water	325 - 550
Note: 6-inch to 10-inch slump	

Flowable fill material shall be proportioned to produce a 28-day compressive strength approximately as follows:

	Pounds per square inch
Pipe trench backfill	50 - 150
Fill abandoned pipes or tanks	30 - 150
Under slabs, behind walls	300 - 1000
Note: Density in place 115 to 145 pounds per cubic foot.	

Not more than 60 minutes shall elapse between the start of moist mixing and the placement of the flowable fill.

Flowable fill placed on slopes shall have a reduced slump with a reduction in water and shall be able to be shaped as required.

The Contractor shall place the flowable fill in such a manner as to eliminate all cavities.

Flowable fill shall not be placed in salt water. When within a tidal area, the flowable fill shall be placed immediately after the salt water has receded.

When flowable fill is used adjacent to ductile iron pipe, the pipe shall be polyethylene encased.

END OF SECTION

SECTION 7 - SURFACE RESTORATION

7.01 GENERAL

The Work in this section includes restoring and maintaining pavements and pavement bases, curbing, sidewalks, driveways, and grass surfaces that are disturbed, damaged, or destroyed during the course of the Work under this Contract.

The quality of workmanship and materials used in the restoration shall produce a surface equal to or better than the condition before the Work began.

Prior to restoration, the Contractor shall saw cut and remove all existing pavement within 2 feet of the edge of the excavation, or within such widths as may be ordered by the Engineer.

Compaction of soil and base materials shall be tested using the AASHTO T 180 method.

Surface restoration workmanship and materials shall conform to the applicable sections of the FDOT-SSRBC.

All dirt areas disturbed shall be restored with sod, unless otherwise specified.

7.02 ROADWAY RESTORATION

Where the installation of pipe or structures occurs within an existing roadway, the limits of excavation shall be saw cut leaving a straight and square edge. The upper portion of the trench backfill shall be replaced with a compacted shell, crushed (reclaimed) concrete, or limerock base as shown on the Contract Drawings, and paved to match the surrounding surface. Replacement base material shall be the same as the existing base. Roadway restoration shall conform to the detail for shown in the Contract Drawings.

7.03 TEMPORARY PAVEMENT

Immediately upon completion of backfilling, the pavement surfaces damaged or destroyed shall be temporarily restored by placing a shell (FDOT-SSRBC Section 911), crushed (reclaimed) concrete (FDOT-SSRBC Section 204 applicable sections), or limerock (FDOT-SSRBC Section 911) base on the backfilled, compacted subgrade, and an adequate temporary asphaltic patch as shown or as approved by the Engineer. Shell crushed (reclaimed) concrete, or limerock shall be used as a base for all bituminous pavements.

Temporary work shall be maintained in a suitable and safe condition for traffic until the permanent pavement is laid or until final acceptance of the Work.

7.04 SHELL BASE

Shell base shall be constructed on the prepared subgrade to not less than 98 percent of maximum density, in accordance with the requirements of FDOT-SSRBC Section 911. The minimum compacted thickness of shell base shall conform to the detail shown on the Contract Drawings.

7.05 LIMEROCK BASE

Limerock base shall be constructed on the prepared subgrade to not less than 98 percent of maximum density, in accordance with the requirements of FDOT-SSRBC Section 911. The minimum compacted thickness of limerock base shall conform to the detail shown on the Contract Drawings.

7.06 CRUSHED (RECLAIMED) CONCRETE BASE

Crushed (reclaimed) concrete base shall be constructed on the prepared subgrade to not less than 98 percent of maximum density, in accordance with the requirements of FDOT-SSRBC Section 204. The minimum compacted thickness of crushed (reclaimed) concrete base shall conform to detail shown on the Contract Drawings.

The minimum limerock bearing ratio (LBR) value shall be 150.

7.07 ASPHALTIC CONCRETE PAVEMENT

A prime coat shall be applied to the prepared base in accordance with FDOT-SSRBC Section 300 prior to permanent asphaltic concrete pavement.

Unless specified elsewhere, all permanent asphaltic concrete pavement replacement shall be constructed in accordance with the requirements of FDOT-SSRBC Sections 320, 330, 334, and 337. Surface types and compacted thickness shall conform to the detail shown on the Contract Drawings.

7.08 BRICK PAVEMENT

Construction of brick pavement shall follow the details as shown on the Contract Drawings and City standard practice using City standard paving brick or red clay brick conforming to ASTM C 32, Grade SS with City standard dimensions.

Brick street abutting asphalt pavement shall have a minimum 6-inch-wide flush Type A Header Curb.

7.09 CURB AND GUTTER

All permanent restoration of street curb, or curb and gutter, shall be of the same type and thickness as the curb, or curb and gutter, which abuts. The grade of the restored curb, or curb and gutter, shall conform to the grade of the existing adjacent curb, or curb and gutter, so that positive drainage is maintained.

7.10 CONCRETE SIDEWALK

The restoration and construction of concrete sidewalks shall conform to applicable requirements of FDOT-SSRBC Section 522 and the Contract Drawings and shall be constructed where shown on the Contract Drawings and directed by the City. Sidewalk expansion joints with bituminous filler shall be installed at a maximum of 50-foot intervals on center and struck joints shall be spaced equidistant with walk width (joints wider than 6 feet shall be spaced as directed by the City). Where

new construction is to be tied into existing facilities, the old material is to be removed back to the nearest construction joint, or sawcut to a straight line as directed by the City or Engineer. The soil under sidewalks and driveways shall be compacted to 98 percent of the maximum density.

New sidewalks shall be 4 inches thick. Concrete pour for walk construction shall be made only on dampened subgrade. A soft broom finish shall be given the walk surface as directed by the Engineer.

Sidewalks crossing driveways shall be constructed according to the Specifications for concrete driveways.

Curb ramps for physically handicapped shall be constructed at all locations where sidewalks cross the curb or where directed by the Engineer. Those existing sidewalks which are removed to accomplish associated work as a part of this Project shall be replaced with a curb ramp when the sidewalk crosses the curb. The cost of curb ramps shall be included in the appropriate proposal item for sidewalk restoration.

Where sidewalks are replaced, the replacement shall be the full width of the walk and the minimum length shall be 60 inches. Restoration of adjacent lawn is incidental to sidewalk replacement and no separate payment will be made therefore.

7.11 HEXAGON BLOCK SIDEWALK

The restoration and construction of hexagon block sidewalks shall conform to the details shown on the Contract Drawings and City standard practice using City standard hexagon blocks.

The soil under sidewalks and driveways shall be compacted to 98 percent of the maximum density. New hexagon block sidewalks shall be 2 inches thick.

Curb ramps for physically handicapped shall be constructed at all locations where sidewalks cross the curb, or where directed by the City or Engineer. Those existing sidewalks which are removed to accomplish associated work as a part of this Project shall be replaced with a curb ramp when the sidewalk crosses the curb. The cost of curb ramps shall be included in the appropriate Pay Item for sidewalk restoration.

Where sidewalks are replaced, the replacement shall be the full width of the walk. Restoration of adjacent grass is incidental to sidewalk replacement and no separate payment will be made therefore.

7.12 DRIVEWAY AND PARKING LOT

Except as otherwise specified, all permanent restoration of base and surface of driveways, parking aprons, and sidewalks shall match the materials, thicknesses, elevations, lines, and grades of the existing construction, all to the Engineer's satisfaction. Patching of Portland cement driveway areas will not be allowed between joints or dummy joints.

For areas where streets are to be paved, or where more than 50 percent of the driveway apron is disturbed, concrete or brick driveways shall be replaced in kind. All other driveways, including shell

and dirt, shall be restored with an asphalt concrete surface from the street to the property line or front of sidewalk, as directed by the City or Engineer.

All base compaction under driveways shall be to a minimum density of 98 percent of the maximum density.

7.13 DRIVEWAY - ASPHALT

Residential asphalt driveway restoration shall include 1-inch thick asphaltic concrete surface over 2 inches of compacted sand-asphalt hot mix base, or 5 inches of compacted limerock or shell base.

Commercial asphalt driveway restoration shall be constructed of 1-inch thick asphaltic concrete surface over 8 inches of limerock base compacted in 2 lifts.

7.14 DRIVEWAY - CONCRETE

The restoration and construction of concrete driveways shall conform to applicable requirements of FDOT-SSRBC Section 522 and the Contract Drawings and shall be constructed where shown on the Contract Drawings and directed by the City or Engineer.

Residential concrete driveway restoration shall be 5 inches thick and shall include placing a single layer of 6-inch by 6-inch wire mesh (WWF 6 x 6 - W1.4 x W1.4).

Commercial concrete driveways shall be 6 inches thick with a double layer of 6-inch by 6-inch wire mesh (WWF 6 x 6 - W1.4 x W1.4).

7.15 DRIVEWAY - PEAGRAVEL

Where less than 50 percent of the driveway apron is disturbed, pea gravel driveways shall be restored to match the existing driveway. Pea gravel driveway restoration shall include asphalt treated shell base 5 inches thick after compaction to a minimum density of 98 percent of the maximum.

7.16 DRIVEWAY - SHELL

Where less than 50 percent of the driveway apron is disturbed, shell driveways shall be restored to match the existing driveway. Shell driveway restoration shall be 5 inches thick after compaction to a minimum density of 98 percent.

7.17 GRASS

7.17.01 Sodding

Sod shall be planted as soon as practical after paving, pipeline, or other work has been completed. Sodding shall always be used over seeding.

All work and materials shall meet the applicable requirements FDOT-SSRBC Section 570 (Sodding).

Sodding shall be done as directed by the Engineer, using only material which, in the opinion of the Engineer, is healthy and free of weeds, and (unless specified otherwise by the Engineer) of the same variety predominating at time of removal. Sod may be St. Augustine, Bahia, or other varieties as selected by the Engineer.

Sod shall be planted within 72 hours of being cut. Only moist, green sod having a virile root system may be planted. Sod shall be cut into adjacent sod to provide a smooth surface, and "top dressed" where necessary. Sod shall be rolled or tamped after planting to provide a uniform and consistent grade.

7.17.02 Grass Maintenance

The Contractor shall properly water and otherwise maintain all seeded and sodded areas for a minimum of 60 consecutive calendar days after completion of sodding operations. After the 60 days, and upon receipt of written request from the Contractor, the Engineer will inspect the areas for acceptance by the City. Any area that is washed or eroded, fails to show a uniform stand of healthy, vigorous grassing, or does not appear to be otherwise developing satisfactorily, shall be re-sodded and maintained until suitable for acceptance by the Engineer.

In the event that the stand of grass is found to be contaminated by weeds or other undesirable growth, the Contractor will be required to effectively eliminate such undesirable growth at his own expense.

7.18 EXPANSION JOINT MATERIAL

Expansion joint material for concrete pavement surfaces, including sidewalks and driveways, shall be the bituminous strip type, 1/2-inch thick, and shall conform to applicable requirements of FDOT-SSRBC Section 932.

END OF SECTION

THIS PAGE INTENTIONALLY LEFT BLANK

SECTION 8 – PAINTING

8.01 GENERAL

Painting materials not obtainable from the prime manufacturer shall be obtained from a second source recommended by the prime manufacturer for compatibility. All products furnished shall meet current Federal Regulations for lead, mercury and other heavy metals, as well as current VOC air quality regulations. Products of the following acceptable manufacturers may be used on this project, except where noted otherwise.

A. Ameron – Corrosion Control Division
B. Devoe & Raynolds Company
C. Indurall
D. KopCoat –RPM
E. MAB Paints
F. PPG Industries, Inc.
G. Rust-Oleum Corporation
H. Sherwin-Williams
I. Tnemec Company, Inc.

The Contractor shall paint or provide a protective coating for all interior and exterior wood and metal surfaces, all interior masonry, valves, and all submerged piping and other metal, whether specifically called for or not. In addition, all exposed piping shall be painted and further identified in accordance with other sections of these specifications. Because of their very nature, some areas or items do not require specific painting or coating for protection or appearance. The following generally do not require painting or coating unless specifically noted otherwise or required by manufacture, color coding, insulation from dissimilar metals, insulation from concrete or cement products, or architectural considerations:

A. Non-Ferrous Alloys:

Aluminum
Monel
Stainless Steel

B. Corrosion Resistant Metals:

Chromium Plated Steel
Weathering Steel
Galvanized Steel

C. Non-Metallic Materials:

Exterior Brick
Concrete
Glass

	Plastic &FRP
	PVC
	Porcelain
Pre-Finished Manufactured Items:	Cabinets
	Louvers
	Motor Control Centers
	Panels
	Signs and Nameplates
	Switchgear
	Switchboards
	Transformers
	Tile

D. Electrical Conduits Attached to Unpainted Surfaces.

E. Insulation and Insulation Jackets.

All exposed piping and conduit within the fence enclosure shall be color-coded in accordance with the following Color Coding Schedule:

A.	Electric	Gray
B.	Gas, Oil, Dangerous Materials	Red
C.	Telephone, Telegraph, Television, Communications	Safety Alert Orange
D.	Potable Water	Safety Blue
E.	Treated Sewage	Safety Green

Other paint colors will be selected by the Engineer

All materials shall be pure and first quality. Materials listed shall be the standard for each such type of material. Primers and finish coats shall be compatible and of the same manufacture where possible. Emulsion and alkyd paints shall contain a mildewcide, and both the paint and mildewcide shall conform to OSHA and Federal requirements, including Fed. Spec. TT-P-19. Paint and protective coating materials shall be sealed in containers that plainly show the designated name, formula or specification number, batch number, color, date of manufacture, manufacturer's directions, and name of manufacturer, all of which shall be plainly legible at the time of use. Pigmented paints shall be furnished in containers not larger than five (5) gallons. Materials shall conform to the specifications shown herein and to the requirements hereinafter specified.

To the maximum extent possible, all products shall be the product of one manufacturer unless a specific specialty coating system is specified. Without exception, all coatings for any service condition specified herein shall be by one manufacturer. Once a paint manufacturer has been selected by the Contractor and approved by the Engineer, the Contractor shall ensure that all

equipment manufacturers prime their equipment with the same or a compatible primer. If this cannot be or is not done for any reason, the Contractor shall apply a "universal primer" and recoat with the approved manufacturer's product in the field.

8.02 SUBMITTALS

Submittals shall be in accordance with the following:

A. Samples. Prepare and submit for Engineer's approval copies of color samples on 8-1/2" x 11" size cards for each paint and protective coating system. Each sample card shall clearly show each coat of the finish system, and shall be clearly marked with the manufacturer's name and product identification, and shall be submitted in sufficient time to allow for approval and, if necessary, disapproval and resubmittal without causing any delay of the project.

B. Coating Materials List.
   1. The Contractor shall provide copies of a paint and coating materials list which indicates the manufacturer and paint number, keyed to the coating schedule herein, for approval by the Engineer prior to or at the time of submittal of samples required herein.
   2. The Contractor shall include with his submittal, his protective coating schedule for shop and field coatings of items to receive protection. The schedule shall conform to the specified requirements for surface preparation, priming, and coating for items covered, and shall follow the same requirements for similar work where such work has not been specifically called-out. No bare ferrous nonworking surfaces shall be omitted from the schedule. Particular care shall be taken to cover in sufficient detail the coating of mechanical joints and other mechanical devices which shall conform to the recommended practice of the manufacturer of the joint or other mechanical devices.
   3. Coatings to be used on plastic and fiberglass materials shall be certified as acceptable by all plastic and fiberglass manufacturers whose products are to be coated. Certification copies shall be submitted to the Engineer. The Contractor shall be certified in writing by the painting and coating material manufacturers as qualified applicators of their products with copies of the certification submitted to the Engineer.

C. Product Data Sheets. Contractor shall submit paint and coatings material manufacturers' printed technical data sheets for products intended for use in each paint and coating system. Data sheets shall fully describe material as to its intended use, makeup, recommended surface preparation and application conditions, primers, material mixing and application (including recommended dry mil thickness recoat time), precautions, safety and maintenance cleaning directions.

D. Material Safety Data Sheets. Material Safety Data Sheets (MSDS) shall accompany all paint submittals and shall be prominently displayed at the job site during all painting activities.

8.03 PAINTING SCHEDULES AND SYSTEMS

Painting and coating of surfaces shall conform to the following schedules and systems, unless otherwise specified or shown on the drawings:

A. Schedule A: System 1 – Exposed exterior structural and miscellaneous steel, piping, equipment to include all stainless steel and carbon steel electrical control cabinets non-submerged, not exposed to corrosion, splash, fumes or immersion conditions.

1. Prime: One sprayed coat of a combination of a two-part epoxy primer, gray, of 3.0 mils, minimum dry film thickness as by Devoe Paints, Tru-Glaze Epoxy Primer Nos. 12735 and 12702 (ratio 19:1) or equal. If shop coat is damaged, re-prime bare areas in the field. The exterior of electrical cabinets, in stainless steel, shall be sand-blasted and spray-primed per the paint manufacturer's instructions.

2. Finish: Two coats of "hanging moss green" (Devoe Paints FX-70), Semi-Gloss Advanced Technology Acrylic Resin of 1.5 to 2.0 mils, dry thickness as Exterior Waterborne Semi-Gloss Enamel #83XX by Devoe Paints, or equal. Coats to be applied by spray painting in the shop.

B. Schedule B: System 2 – Piping and pumping equipment – submerged or non-submerged, exposed to spray, splash or corrosive atmosphere, excluding chains and sprockets, and stainless steel bracing in the wetwell:

1. Prime: One coat chemical resistant red iron oxide, based on a polyamide cured epoxy resin, minimum of 3.0-5.0 mils dry film thickness as by Devoe Paints, Devron 201. If shop coat is damaged, re-prime bare areas in the field.

2. Finish: Two coats of polyamide cured, epoxy resin coating, minimum of 4.0-6.0 mils dry film thickness per coat as by Devoe Paints, Devron 224HS-color, moss green as required above.

D. Schedule C; System 3 - Coating aluminum and non-ferrous metal surfaces, including undersides of aluminum access hatches, frames, and checkered plate, subject to corrosive atmosphere and condensation

1. Surface Preparation: Clean non-ferrous surfaces in accordance with 26 SSPC-SP7 (brush-off blast cleaning)
2. Prime: Minimum 3.0 mil DFT (Tnemec Primer – Series 66)
3. Finish: Minimum 4 mil DFT for a minimum total dry mil thickness of 7 mils (Tnemec Finish Coat – Series 66)

8.04 EXECUTION

All painting shall be done by skilled and experienced craftsmen and shall be of highest quality workmanship. Application of materials shall be done only on properly prepared surfaces as herein specified.

Before commencing work, the painter shall make certain that surfaces to be covered are in good condition. Should the painter find such surfaces not to be totally acceptable for covering, he shall report such fact to the Engineer. The application of paint shall be held as acceptance of the surfaces and working conditions and the painter will be held responsible for the results reasonably expected from the materials and processes specified.

Only compatible materials shall be used in the work. Particular attention shall be directed to compatibility of primers and finish coats. If necessary, subject to approval of the Engineer, a compatible barrier coat shall be applied between all existing prime coat and subsequent field coats to ensure compatibility. Ductile iron pipe that has an exterior bituminous coating shall not be painted unless the bituminous coating is removed by sand blasting or an appropriate, compatible, intermediate coat is applied before top coating in accordance with this specification

Hardware, hardware accessories, machined surfaces, nameplates giving manufacturer's data, cover plates, grease fittings, lighting fixtures and similar items in contact with painted surfaces and not to be painted shall be removed, masked, or otherwise protected prior to surface preparation and painting operations so they remain clean and free from paint.

Ferrous metals (not shop primed) shall be sandblasted per SSPC-SP6 to remove mill scale and rust. Ferrous surfaces to be submerged or exposed to spray, splash, fumes or corrosive atmosphere shall be sandblasted to near-white metal blast cleaning according to SSPC-SP 10. Brush blast or clean other metals as appropriate to provide suitable surface. Surface profile as obtained from sandblasting shall be recommended by the coating manufacturer. All metal surfaces shall be completely degreased by solvent cleaning in compliance with SSPC-SP 1.

Galvanized surfaces shall be cleaned of dirt, grease and other foreign substances and solvent cleaned. Surfaces shall be pro-treated with one coat of proprietary acid bound resinous or crystalline zinc phosphate preparation, used in accordance with the manufacturer's directions.

Remove glaze, of florescence, dirt, loose particles and grease (and existing paint, if applicable) from concrete receiving masonry paint. Fill all cracks, cut out defective joints and repaint.

In addition to the above listed surface preparations, all dirt, rust, scale, splinters, loose particles, disintegrated paint grease, oil and other deleterious substances shall be removed from all surfaces that are to be coated.

Work shall be done only under favorable weather conditions and as recommended by paint supplier. Exterior painting shall be done only in dry weather. Any surface coating damaged by moisture or rain shall be removed and redone as directed by the Engineer. Coatings shall be mixed, thinned, tinted and applied in accordance with the manufacturer's recommendations. The Contractor shall tint or match colors as selected by the Owner. A sample shall be applied on the job for review and approval before work is actually done. No thinners shall be used except those specifically mentioned and only in such quantity as directed by the manufacturer's instructions. If thinning is used, sufficient additional coat shall be applied to assure the required dry film thickness is achieved.

The manufacturer's recommended thinner or cleanup solvent shall be used for all cleanup. Application by brush, spray, airless spray or roller shall be as recommend by the manufacturer for

optimum performance and appearance. Paint shall be applied in a neat manner with finished surface free of runs, sags, ridges, laps and brush marks.

Each coat shall be applied in a manner that will produce an even film of uniform and proper thickness, and no variation in sheen or color. Where more than one coat of paint is specified, each coat shall be sufficiently tinted to result in a perceptible difference in shades of the various coats of paints so that the application of subsequent coats can be properly and uniformly spread and inspected. Provision shall be made to allow thorough drying between coats as recommended by the manufacturer before the next coat is applied, and paint used in successive field coats shall be produced by the same manufacturer.

Seal coats shall be used over bitumen-coated surfaces as applicable. Plastic pipe shall be painted in accordance with the pipe manufacturer's recommendations. Pipes, shoot metal ducts and other metal items which are to be installed in inaccessible locations shall be painted prior to installation.

Pumps, motors, machinery, equipment, electrical panels and other manufactured items shall have surfaces prepared, primed and coating in accordance with the recommendations of the manufacturer, and be given at least one touch-up coat with the intermediate coat material and one compete finish cost in the field.

The prime and intermediate coats for the various coating systems shall be as specified earlier and shall be compatible with the field coat or coats. Paint used in the first field coat over shop painted or previously painted surfaces shall cause no wrinkling, lifting or other damage to underlying paint.

All completed surfaces will be checked by the Engineer, and the Contractor shall provide the necessary properly calibrated gages. All non-ferrous surfaces shall be checked for number of coats and thickness by use of a Tooke gage. All ferrous surfaces shall be checked for film thickness by use of Elcometer or Micro-Test magnetic dry film gauge properly calibrated. . The Engineer shall have the right to reject all material for work that is unsatisfactory and require the replacement of either or both at the expense of the Contractor.

All paint brushed, splattered, spilled, or splashed on any surface not specified to be painted shall be removed. Upon completion of the painting work, the Owner shall be furnished one (1) gallon of each type and color of finish paint for touching up at no additional cost. Paint container labels, in addition to other required information, shall have location of color and type marked thereon.

Surfaces to be painted shall be inspected before any paint materials are applied, and after preparation has been completed.

Painted surfaces shall be inspected between coats, prior to application of next coat of painting material. Failure to get acceptance between coats will nullify credits for coats previously applied.

All paint shall be delivered to the job site in unopened original containers.

All paint not intended for the job shall be removed from the job site.

END OF SECTION

SECTION 9 - PIPING MATERIALS: DUCTILE IRON PIPE AND FITTINGS

9.01 GENERAL

The Work in this section includes furnishing all ductile iron pipe, fittings, joints, and appurtenant materials. All castings furnished shall have been cast in the United States of America unless complete certification is furnished in accordance with the latest edition of ANSI/AWWA C 110.

Standards referenced in this section are the latest revision of the following specifications:

ANSI/AWWA C104	"Cement Mortar Lining for Ductile-Iron Pipe and Fittings for Water"
ANSI/AWWA C110	"Ductile-Iron and Gray Iron Fittings, 3-Inch through 48-Inch, for Water and Other Liquids"
ANSI/AWWA C111	"Rubber-Gasket Joints for Ductile-Iron and Pressure Pipe and Fittings"
ANSI/AWWA C115	"Flanged Ductile-Iron Pipe with Threaded Flanges"
ANSI/AWWA C150	"Thickness Design of Ductile-Iron Pipe"
ANSI/AWWA C151	"Ductile-Iron Pipe, Centrifugally Cast, for Water or Other Liquids"
ANSI/AWWA C153	"Ductile-Iron Compact Fittings, 3-Inch through 24-Inch, for Water and Other Liquids"
ASTM D 1248	"Polyethylene Plastics Molding and Extrusion Materials"

9.02 PIPE

9.02.01 GENERAL

All ductile iron pipe shall be designed in accordance with ANSI/AWWA C150. Pipe shall be minimum pressure class as follows:

Size	Pressure Class
3-inch through 18-inch	350
20-inch through 24-inch	300
30-inch through 48-inch	200

For threaded flanged pipe the minimum thickness shall be the nominal thickness as shown on Table 15.1 of ANSI/AWWA C115.

Thickness shall be designed for a flat-bottom trench backfill lightly consolidated to centerline of pipe. Pipe shall be manufactured in accordance with ANSI/AWWA C151.

The pressure rating, metal thickness class, net weight of pipe (without lining) length of pipe, name of manufacturer, "DI" or "DUCTILE," and country where cast, shall be clearly marked on each length of pipe.

The Contractor shall take extreme care when handling pipe and fittings to ensure the interior lining does not get damaged during construction. Lined pipe and fittings must be handled only from the outside of the pipe and fittings. No forks, chains, straps, hooks, etc. shall be placed inside the pipe and fittings for lifting, positioning, or laying. The pipe shall not be dropped or unloaded by rolling.

Care should be taken not to let the pipe strike sharp objects while swinging or being off loaded. Ductile iron pipe should never be placed on grade by use of hydraulic pressure from an excavator bucket or by banging with heavy hammers.

9.02.02 LINING

A. **Potable Water Lines and Reclaimed Water Lines**: Ductile iron pipe and fittings for use in potable and reclaimed water lines shall be cement mortar lined. Cement lining shall conform to ANSI/AWWA C104, and seal coated with approved bituminous seal coat in accordance with ANSI/AWWA C151. Seal coating shall be UL listed or NSF approved for use in potable water mains.

B. **Sanitary Force Mains and Gravity Sanitary Pipe**: Ductile iron pipe and fittings for sanitary sewer force mains and gravity sewer pipe shall be polyethylene, polyurethane, or epoxy lined.

   Epoxy lining shall be 40 mil minimum thickness (multi-pass process) and shall be Protecto 401 Ceramic Epoxy, as manufactured by the Protecto Division of Vulcan Painters, Inc., or approved equal.

   Polyethylene lining shall be factory furnished with a fusion bonded polyethylene liner of 60 mil minimum thickness conforming to ASTM D1248, such as Polybond Plus as furnished by American Cast Iron Pipe Co. or approved equal.

   Polyurethane lining shall be factory applied conforming to Corropipe, as manufactured by Madison Chemical Industries, Inc., or an approved equal. Material shall be applied in conformance with the manufacturer's recommendation and shall be a 40-mil final dry film thickness.

   For any lining method, to ensure a holiday-free lining, documentation must be provided, prior to shipment, showing each section of lined pipe has passed holiday testing at the time of production per ASTM G62. The lining shall have a minimum three (3) year warranty covering failure of the lining and bond failure between liner and pipe.

C. **Storm Drain Gravity Pipe**: Ductile iron pipe and fittings for storm drain gravity pipe shall be epoxy lined as per sanitary pipe or cement mortar lined as per water pipe, at the Contractor's option.

9.03 FITTINGS

Ductile iron fittings shall conform to ANSI/AWWA C110 or ANSI/AWWA C153.

Fittings shall be suitable for a minimum water pressure plus water hammer as follows:

Size	Type	Pressure Rating
3-inch through 12-inch	DI	350
14-inch through 24-inch	DI	350
30-inch through 48-inch	DI	250

Fittings shall be coated outside with petroleum asphaltic coating, 1 mil minimum thickness.

Fittings shall be lined as specified herein headed "4.02 Pipe."

Anchor couplings equal to McWayne Clow F-1211 for fire hydrant assemblies may be substituted with an anchoring tee equal to Catalog No. A-10180 locked hydrant tee as manufactured by American Ductile Iron Pipe Co. or hydrant tee with rotatable MJ gland as manufactured by U.S. Pipe Co. in place of the MJ tee and anchor coupling as shown, at the Contractor's option.

9.04 JOINTS - BURIED PIPE AND FITTINGS

Joints for ductile iron pipe and fittings shall conform to ANSI/AWWA C111, except as otherwise specified. All pipe and fittings shall be furnished complete with joint accessories necessary for installation conforming to ANSI/AWWA C111. No additional payment will be made for joint accessories, including retainer glands, unless otherwise specified.

When deflection is required the joint shall be completed prior to setting the deflection. The deflection shall conform to applicable AWWA Standards or manufacturer's recommendation with prior Engineer's approval.

The Contractor shall furnish and install all necessary materials, equipment, and appurtenances required to complete the work.

A. **Unrestrained Joints**: Joints for unrestrained pipe shall be push-on joint. Joints for fittings, when installed with unrestrained pipe, shall be mechanical joint with DI retainer glands, as specified herein for restrained joints.

B. **Restrained Joints**: All joints in restrained pipe systems shall be of the same type (pipe and fittings), except valves shall be mechanical joint with DI retainer glands as specified.

1. **12-inch and Smaller**: Joints for restrained pipe and fittings, 12-inch and smaller, shall be one of the following:

a. Push-on restrained joint utilizing a retainer ring, equal to U.S. Pipe TR Flex. It shall be UL listed, FM approved, or shall be certified by an approved laboratory that the restrained joint will not separate at the specified test pressure.

b. Push-on restrained joint using a locking type gasket, equal to Field-Lok, as manufactured by U.S. Pipe and Foundry, Inc. It shall be UL listed, FM approved, or shall be certified by an approved laboratory that the restrained joint will not separate at the specified test pressure.

c. Mechanical joint with DI retainer glands shall be furnished with retainer glands equal to Series 1100 Megalug, as manufactured by EBAA Iron Inc., Stargrip 3000 as manufactured by Star Pipe Products, or DI MJ Gripper Gland as manufactured by U.S. Pipe and Foundry Co. for use with ductile iron pipe. All retainer glands shall be UL listed, FM approved, or shall be certified for 350 psi pressure rating with a 2:1 safety factor.

2. **Larger than 12-inch**: Joints for restrained pipe and fittings larger than 12-inch shall be as follows:

   a. Restrained pipe joints shall be modified push-on restrained joint, equal to U.S. Pipe TR Flex, and shall be UL listed or FM approved.

   b. Fittings joints shall be equal to U.S. Pipe TR Flex or shall be mechanical joint with DI retainer glands. Retainer glands shall be equal to Series 1100 Megalug or Stargrip 3000 for 16-inch and larger pipe. All retainer glands shall be UL listed, FM approved, or certified for 350 psi pressure rating (for 16-inch) and 250 psi pressure rating (for larger than 16-inch) with a 2:1 safety factor.

   c. Valve joints shall be mechanical joint with DI retainer glands as specified herein for larger than 12-inch fittings joints.

9.05 JOINTS - EXPOSED PIPE AND FITTINGS

Joints for exposed ductile iron pipe and fittings shall be restrained, except as otherwise noted on the Contract Drawings. Joints for exposed pipe in plants and in vaults shall be flanged where noted on the Contract Drawings.

Joints for exposed pipe and fittings 12-inch and smaller shall be modified push-on restrained joint using a retainer ring, or modified push-on joint using a locking type gasket, as specified herein headed "4.04 Joints - Buried Pipe and Fittings."

Joints for exposed pipe and fittings larger than 12-inch shall be modified push-on restrained joint using a retainer ring as specified herein headed "4.04 Joints - Buried Pipe and Fittings."

9.06 DETECTION

Pipe shall have 3-inch detectable metallic tape of the proper color placed directly above the pipe and 12-inch below finished grade or 6-inch detectable tape between 12-inch and 24-inch below finished grade.

Pipe shall also have tracer wire installed along the pipe alignment. The tracer wire to be used shall be a solid, 10-gauge, high strength, copper clad steel wire with a polyethylene jacket of appropriate color manufactured by Copperhead Industries or approved equal.

9.07 ZINC/EPOXY/FLUOROPOLYMER PROTECTIVE COATING

Joints and Pipe exposed to extreme coastal environments including, but not limited to, aerial ocean crossings shall have this system or an approved equal applied as a protective coating.

Surface Preparation: SSPC-SP6/NACE No.3 Commercial Blast Cleaning with a minimum 1.5 mil angular anchor profile.

Tnemec	Coating Thickness
Primer: Series 90-97 Tneme-Zinc	2.5 - 3.5 mils
2nd Coat: Series 66HS Hi-Build Epoxoline	3.0 - 6.0 mils

3rd Coat: Series 700 Hydroflon 2.0 - 3.0 mils

Total Dry Film Thickness: 7.5 - 12.5 mils

Minimum Dry Film Thickness: 9.5 mils

END OF SECTION

THIS PAGE INTENTIONALLY LEFT BLANK

SECTION 10 - PIPING MATERIALS: PVC PRESSURE PIPE

10.01 GENERAL

The Work in this section includes furnishing all Polyvinyl Chloride (PVC) pressure pipe and fittings. PVC pressure pipe includes all PVC pressure pipe 2-inch through 36-inch.

Standards referenced in this Section are the latest revision of the following specifications:

ANSI/AWWA C900-16	"Polyvinyl Chloride (PVC) Pressure Pipe and Fabricated Fittings, 4 In. Through 60 In."
ANSI/AWWA C110	"Ductile-Iron and Gray-Iron Fittings, 3-Inch through 48-Inch for Water"
ANSI/AWWA C111	"Rubber-Gasket Joints for Ductile-Iron Pressure Pipe and Fittings"
ANSI/AWWA C153	"Ductile-Iron and Gray-Iron Fittings, 3-Inch through 48-Inch for Water"
ASTM D 1784	"Standard Specification for Rigid Poly (Vinyl Chloride) (PVC) Compounds and Chlorinated Poly (Vinyl Chloride) (CPVC) Compounds"
ASTM D 1785	"Standard Specification for Poly (Vinyl Chloride) (PVC) Plastic Pipe, Schedules 40, 80, and 120
ASTM D 2241	"Standard Specification for Poly (Vinyl Chloride) (PVC) Pressure-Rated Pipe (SDR Series)"
ASTM D 3139	"Standard Specification for Joints for Plastic Pressure Pipes Using Flexible Elastomeric Seals"

10.02 PIPE

A. **Two-inch Pipes**: All 2-inch PVC pipe shall meet ASTM D 1784 specification for rigid PVC compounds and ASTM D 2241 specification for PVC plastic pipe. PVC pipe shall be suitable for use at maximum hydrostatic working pressure of 160 psi at 73°F. Pipe shall have a standard dimension ratio (SDR) 26 and bear the NSF Seal for potable water pipe.

B. **4-inch Through 36-inch Pipes**: PVC pressure pipe 4-inch through 36-inch shall meet the requirements of ANSI/AWWA C900-16, with outside diameter dimensions of ductile iron pipe. All 4-inch through 36-inch PVC pressure pipe shall be Class 235 and DR18.

C. **UV Resistant PVC Pipe**: All PVC piping exposed to sunlight shall contain titanium dioxide for UV resistance, and shall conform to ASTM D 1784 and ASTM D 1785 (IPS). The Contractor shall submit the manufacturer's certificate of conformance to the City. Pipe shall be marked with manufacturer's identification.

10.03 FITTINGS

A. **Two-inch Pipes**: Gasketed joint standard dimension ratio (SDR) 21 PVC or galvanized steel fittings shall be used with all 2-inch PVC pipe. PVC adapters, Harco as manufactured by the Harrinton Corporation or approved equal, shall be used for jointing to 2-inch gate valves, galvanized fittings, and existing threaded pipe.

B. **Four-inch Through 36-inch Pipes**

1. **Molded PVC Pressure Fittings**: Fittings for 4-inch through 8-inch sanitary sewer pressure pipe shall be molded PVC pressure fittings, unless DI fittings are directed by the Engineer. Molded PVC fittings shall meet the requirements of ANSI/AWWA C900-16 and shall be Harco Class 150 as manufactured by the Harrington Corporation, or approved equal, as directed by the Engineer.

2. **DI Fittings**: Fittings for pipe larger than 8-inch shall be DI, mechanical joint. DI fittings for 4-inch through 36-inch PVC pressure pipe shall conform to ANSI/AWWA C110 or C153 and shall conform to the Technical Specifications section headed "Piping Materials: Ductile Iron Pipe and Fittings."

C. Where flanged fittings are shown, specified, or directed by the Engineer, adapter flanges shall be used on plain end PVC pipe. Adapter flanges shall be suitable for PVC pipe and be equal to Uni-Flange Series 900 as manufactured by Ford/Uni-Flange, Wabash, Indiana.

10.04 JOINTS

Pipe joints shall be plain end, rubber gasket push-on joints, unless otherwise shown. Push-on joints shall meet the requirements of ASTM D 3139.

Joints to DI fittings shall be rubber gasket mechanical joints with retainer glands, unless otherwise shown. All retainer glands shall be UL listed or FM approved. The retainer glands shall be installed in accordance with the manufacturer's recommendations.

When deflection is required the joint shall be completed prior to setting the deflection. The deflection shall conform to applicable AWWA Standards or manufacturer's recommendation with prior Engineer's approval.

Mechanical joints shall meet the requirements of ANSI/AWWA C111.

10.05 DETECTION

Pipe shall have 3-inch detectable metallic tape of the proper color placed directly above the pipe and 12-inch below finished grade or 6-inch detectable tape between 12-inch and 24-inch below finished grade.

Pipe shall also have tracer wire installed along the pipe alignment. The tracer wire to be used shall be a solid, 10-gauge, high strength, copper clad steel wire with a polyethylene jacket of appropriate color manufactured by Copperhead Industries or approved equal.

10.06 MARKINGS AND COLOR CODING

In addition to the standard markings required by ANSI/AWWA C900-16, the letters NSF denoting National Sanitation Foundation approval shall be included in the marking system, on each pipe length and fitting.

PVC pipe shall be manufactured of solid color as specified, or white with continuous colored ink lettering. The applicable color codes, with light color stabilant, are as follows:

Pipe Use	Color Coding
Potable Water	Safety Blue
Sanitary Sewer	Safety Green
Reclaimed Water	Safety Purple

UV resistant PVC pipe shall be solid color as specified above, or white with colored lettering as specified above.

10.07 HARNESSING

Ductile iron fittings with mechanical joints used with PVC pipe that require harnessing, shall be provided with ductile iron retainer glands such as Series 2000 PV Megalug as manufactured by EBAA Iron Inc., Stargrip 4000 as manufactured by Star Pipe Products, or approved equal.

PVC push-on joints for pipe in casings, for joints to PVC pressure fittings, or where shown, shall be harnessed using a ductile iron retainer for push-on joint PVC pipe, such as Series 1600 as manufactured by EBAA Iron Inc., Series 1100 as manufactured by Star Pipe Products, or approved equal.

10.08 INSPECTION AND TESTING

All pipelines shall remain undisturbed for 24 hours to develop complete strength at all joints. All pipelines shall be subjected to a hydrostatic pressure and leak test per the Specifications.

END OF SECTION

THIS PAGE INTENTIONALLY LEFT BLANK

SECTION 11 - PIPING MATERIALS: HDPE PRESSURE PIPE

11.01 SCOPE OF WORK

The Contractor shall furnish all labor, materials, equipment and incidentals required to install polyethylene pressure pipe, fittings and appurtenances as shown on the Contract Drawings and specified in the Contract Documents and these Standards.

Newly installed pipe shall be kept clean and free of all foreign matter & gouges.

All pipe shall be correctly color coded / identified.

11.02 QUALIFICATIONS

All polyethylene pipe, fittings and appurtenances shall be furnished by a single manufacturer who is fully experienced, reputable and qualified in the manufacture of the items to be furnished.

11.03 POLYETHYLENE PRESSURE PIPE

A. Polyethylene pipe 4" diameter and larger shall be high-density bimodal PE4710 polyethylene resin with a minimum cell classification of 445574 per ASTM D3350, Class 200, DR 11, meeting the requirements of AWWA C906. All pipe materials used in potable water systems shall comply with NSF Standard 61. Outside diameters of water, reclaimed water and pressure sewer HDPE pipes shall be ductile-iron pipe sizing system (DIPS).

B. Polyethylene tubing 2 inches in diameter and smaller for potable water and reclaimed water shall be high-density PE4710 polyethylene resin with a minimum cell classification of 445574 per ASTM D3350, Pressure Class 200, Copper Tube Size (CTS), SDR 9, meeting the requirements of AWWA C901 and ASTM D2737. Butt fusion or CTS brass connections shall be used. All pipe materials used in potable water systems shall comply with NSF Standard 61.

C. Alternatively, polyethylene tubing 2 inches in diameter and smaller for potable water and reclaimed water shall be crosslinked high-density polyethylene (PEXa) 3306 pipe, Pressure Class 200, Copper Tube Size (CTS), SDR 9, meeting the requirements of AWWA C904. Butt fusion or CTS brass connections shall be used. All pipe materials used in potable water systems shall comply with NSF Standard 61.

D. All HDPE MJ Adapters (DIPS) shall be a DIPS Bell MJ Adaptor with a retaining gland, stainless steel reinforcing collar, gland ring, standard MJ gasket, and extra-long Tee-head bolts. The gland ring shall be ductile iron, C110, heavy body gland ring. Twist-off nuts, sized same as tee-head bolts, and shall be used to insure proper actuating of restraining devices.

11.04 JOINTS

Where PE pipe is joined to PE pipe, it shall be by thermal butt fusion. Thermal fusion shall be accomplished in accordance with the written instructions of the pipe manufacturer and fusion equipment supplier. The installer of the thermal butt fused PE pipe shall have received training in

heat fusion pipe joining methods and shall have had experience in performing this type of work. The date of technician certification shall not exceed 12 months before commencing construction.

Where thermal butt fusion cannot be used, or when specifically called for on the Contract Drawings, electro-fused couplings may be used. Fusion shall be in accordance with the written instructions of the fitting manufacturer. However, Contractor must get prior approval from the City and Engineer before implementing a fusion coupling. Solvent epoxy cementing, electro-fusion couplings and mechanical joining with bolt on wrap around clamps or mechanical joints without an adapter shall not be used for connections.

All fittings for HDPE pipe (4” and larger), except for D.I/HDPE Mechanical Joint Adaptors, shall be ductile iron mechanical joint fittings and shall be joined to the pipe using a butt fused restrained mechanical joint adapter. The D.I./HDPE mechanical joint adapter shall be connected to the HDPE pipe by a heat-fused joint on one end, and connected to a ductile iron pipe valve, or fitting with a mechanical joint on the other end.

Flanged adapter, mechanical adapter and molded fittings for 4-inch and larger pipe shall be Pressure Class 200, PE4710, Ductile Iron Pipe Size (DIPS), DR 11, conforming to AWWA C906 with min. cell classification of 445474 per ASTM D3350. Mechanical joints and fittings for 2-inch and smaller tubing shall meet the requirements of: AWWA C901, ASTM D3350 and ASTM D3140.

11.05 DETECTION

Direct buried HDPE pipe shall have 3-inch detectable metallic tape of the proper color placed directly above the pipe and 12-inch below finished grade or 6-inch detectable tape between 12-inch and 24" below finished grade.

Direct buried or horizontal directional drilled HDPE pipe shall also have tracer wire installed along the pipe alignment. The tracer wire to be used shall be a solid, 10-gauge, high strength, copper clad steel wire with a polyethylene jacket of appropriate color manufactured by Copperhead Industries or approved equal.

11.06 IDENTIFICATION

Pipe shall bear identification markings in accordance with AWWA C906.

Pipe shall be color coded blue for water, purple (Pantone 522 C) for reclaimed water or green for pressure sewer using a solid pipe color or embedded colored stripes. Where stripes are used, there shall be a minimum of three stripes equally spaced.

11.07 INSTALLING POLYETHYLENE PRESSURE PIPE AND FITTINGS

All polyethylene pressure pipe shall be installed by direct bury, directional bore, or a method approved by the City prior to construction. If directional bore is used, or if directed by the City, the entire area of construction shall be surrounded by silt barriers during construction.

11.08 INSPECTION AND TESTING

All pipelines shall remain undisturbed for 24 hours to develop complete strength at all joints. All pipelines shall be subjected to a hydrostatic pressure and leak test per the Specifications.

END OF SECTION

THIS PAGE INTENTIONALLY LEFT BLANK

SECTION 12 - PRESSURE PIPE CONSTRUCTION

12.01 GENERAL

The Work in this section includes construction of potable water mains, reclaimed water mains, sanitary force mains, and appurtenances.

Pressure pipelines are to be constructed at locations shown on the Contract Drawings. The City reserves the right to make minor changes in grade and/or alignments as the Work progresses.

Piping materials for pressure pipe installations shall be as follows:

Potable Water Main		
PVC Pipe	2-inch	
DI Pipe	6-inch and larger	
HDPE Pipe	2-inch and larger	ASTM D3350 meeting PE 3408 code designation
Galvanized Pipe	2-inch blow-off assemblies, 2-inch connections, 2-inch short tunneling, and 2-inch short relocations	
Fittings	2-inch PVC pipe:	PVC with gasketed joint
	2-inch galvanized pipe	Galvanized steel with threaded joint
	6-inch and larger pipe	Ductile Iron (DI) with push-on or mechanical joint

Sanitary Force Main		
PVC Pipe	4-inch through 36-inch:	ANSI/AWWA C900-16
DI Pipe	14-inch and larger pipe:	ANSI/AWWA C151
HDPE Pipe	2-inch and larger	ASTM D3350 meeting PE 3408 code designation
PVC Fittings	4-inch through 48-inch pipe:	DI with push-on or mechanical joint
DI Fittings	4-inch and larger pipe:	DI with push-on or mechanical joint
HDPE Fittings	2-inch and larger pipe:	ASTM D3350 meeting PE4710 code designation or DI with HDPE mechanical joint adapter

All existing water services shall be kept in service during the construction of water mains and the preparation of new service connections. Water meters requiring disconnection by the Contractor to accomplish the Work shall be promptly restored to service by the Contractor. The Contractor shall give a minimum of 24 hours prior written notice to all affected water customers of the intended service interruption.

The Contractor's attention is called to the fact that the existing sewer system must be kept in operation at all times. Where connections are made to existing mains or other shutdowns are necessary, permission must be obtained and arrangements must be made with the Utilities

Department for removing from service those mains that will be affected. Shutdowns must be held to a minimum in both number and duration. Bypass pumping and hauling operations may be required to interrupt service.

No valve or other control device on the existing system shall be operated by the Contractor without first obtaining approval from the Utilities Department. The Contractor shall, at least forty-eight (48) hours in advance, notify citizens subject to interruption of service by means of door hangers or any other approved method of the starting time and duration of such interruption.

All pipe, fittings, and appurtenances shall be furnished by the Contractor and be transported, delivered, and installed by the Contractor in accordance with the requirements of the subsection headed "Laying and Jointing Pipelines."

All pipelines shall be tested in accordance with the requirements of the subsection headed "Testing and Disinfection of Pressure Pipelines: Pressure Test."

All potable water and reclaimed water pipelines shall be disinfected before they are put into service as specified in the subsection headed "Testing and Disinfection of Pressure Pipelines: Disinfection."

As-built drawings shall be submitted to the Engineer prior to acceptance of the Work and prior to commencement of the warranty period.

Standards referenced in this Section are the latest revision of the following specifications:

ANSI/AWWA C105	"Polyethylene Encasement for Ductile-Iron Piping for Water and Other Liquids"
ANSI/AWWA C110	"Ductile-Iron and Gray-Iron Fittings, 3-Inch through 48-Inch
ANSI/AWWA C111	"Rubber-Gasket Joints for Ductile-Iron Pressure Pipe and Fittings"
ANSI/AWWA C504	"Rubber-Seated Butterfly Valves"
ANSI/AWWA C509	"Resilient-Seated Gate Valves for Water and Sewerage Systems"
ANSI/AWWA C515	“Reduced Wall, Resilient-Seated Gate Valves for Water Supply Service”
ANSI/AWWA C550	"Protective Epoxy Interior Coating for Valves and Hydrants"
ANSI/AWWA C600	"Installation of Ductile-Iron Water Mains and Their Appurtenances"
ANSI/AWWA C605	"Underground Installation of PVC Pressure Pipe and Fittings for Water"
ANSI/AWWA C651	"Disinfecting Water Mains"
ANSI/AWWA C800	"Underground Service Line Valves and Fittings"

ANSI/AWWA C900-16	"Polyvinyl Chloride (PVC) Pressure Pipe and Fabricated Fittings, 4 In. Through 60 In."
ANSI/AWWA C901	"Polyethylene (PE) Pressure Pipe and Tubing, 1/2-Inch through 3-Inch for Water Service"
ANSI/AWWA C906	"Polyvinyl Chloride (PVC) Pressure Pipe and Fittings 4-Inch through 63-Inch, for Water Distribution and Transmission"
ANSI/AWWA C901	"Polyethylene (PE) Pressure Pipe and Tubing, 1/2-Inch through 3-Inch for Water Service"
ASTM A 126	“Specification for Gray Iron Castings for Valves, Flanges, and Pipe Fittings”
ASTM D 429	"Test Methods for Rubber Property - Adhesion to Rigid Substrates"
ASTM D 3139	"Standard Specification for Joints for Plastic Pressure Pipes using Flexible Elastomeric Seals"

12.02 DATA TO BE SUBMITTED

The Contractor shall submit shop drawings in accordance with the Specifications.

Pipe
Valves
Joints and joint accessories
Fittings
Specials and accessories
Special linings and coatings
Water service materials

12.03 MATERIALS

All pressure pipe materials shall be in accordance with the applicable requirements of the Technical Specifications sections headed:

DIP “Piping Materials: Ductile Iron Pipe and Fittings”
PVC “Piping Materials: PVC Pressure Pipe”
HDPE “Piping Materials: HDPE Pressure Pipe”

All pressure pipe materials (pipe, fittings, valves, valve boxes, tapping valves and sleeves, precast thrust blocks, blow-offs, house services, etc.) except fire hydrants, shall be furnished by the Contractor. All pressure pipe fittings and valves shall be cast and manufactured in the United States of America unless complete certification is furnished in accordance with ANSI/AWWA C110.

All materials furnished shall be new. Materials not specified herein or on the Contract Drawings

shall conform to AWWA Standards and Industry Standards.

Piping, concrete, masonry, and all other materials shall conform to those materials as specified in the appropriate Technical Specifications sections for those materials. Specific pressure pipe and appurtenances materials shall conform to the following specifications:

All materials found during the progress of work to have flaws, cracks, or other defects will be rejected by the Engineer regardless of whether or not it has been installed and shall be replaced by and at the expense of the Contractor.

Materials shall not be stacked or placed under materials in such a manner that damage could result. Slings, hooks, or tongs used for lifting shall be padded in such a manner as to prevent damage to exterior surfaces, interior linings and components. If any part of the coating, lining or components is damaged, the repairs or replacement shall be made by the Contractor at his expense and in a manner satisfactory to the Engineer prior to attempting installation. In the event that materials supplied by the City are defective, the Contractor shall notify the Engineer immediately so arrangements can be made for replacing such devices.

12.03.01 2-INCH DIAMETER PIPE

1. Steel pipe shall be standard galvanized steel, Schedule 40, furnished in 21-foot lengths with both ends threaded.

2. All 2-inch steel fittings shall have screw type joints.

3. Pipe thread compound shall not be used. Threads shall be wrapped with teflon joint tape, non-hardening, Mil. Spec. T27730A. Cutting oils shall be dark, non-toxic, and equal to cutting oil manufactured by the Rigid Tool Company. The Contractor shall take caution not to allow cutting oil inside the pipe and shall remove all cuttings. Cutting oils shall be UL listed or NSF approved for use in potable water systems.

4. PVC pressure pipe to be used in the potable water system shall be Safety Blue in color or white with Safety Blue identification tape or color coded approved ink lettering as specified. PVC pressure pipe to be used in the reclaimed water system shall be Safety Purple in color or white with Safety Purple identification tape or approved color-coded ink lettering as specified.

   PVC pipe shall conform to the Technical Specifications section headed "Piping Materials - PVC Pressure Pipe."

5. HDPE pressure pipe shall conform to the Technical Specifications section headed, “Piping Materials – HDPE Pressure Pipe.”

12.03.02 VALVES - GENERAL

1. Valves shall be iron body, bronze mounted, and have joint ends as shown or specified. Valves shall have O-ring seals, unless otherwise specified.

2. A standard 2-inch square AWWA operating nut shall be provided on each valve. Valves shall have non-rising stems and shall open when the nut is turned counterclockwise. Each nut shall be marked with an arrow.

3. All valves of the same type shall be from the same manufacturer. Parts of valves of the same type and size shall be interchangeable. Unless otherwise specified, all valves shall be designed for a cold water working pressure of 150 psi.

4. All valves shall be furnished complete with gaskets, bolts, nuts, and glands necessary for installation.

5. All valves larger than 2-inch shall have restrained rubber gasketed compression joints, or mechanical joints with retainer glands, conforming to ANSI/AWWA C111, at the Contractor's option unless otherwise noted.

6. Valves used for sanitary force mains shall be the same as those used in other pressure pipe applications, unless otherwise specified.

7. Upon request, the valve manufacturer shall provide an affidavit of compliance, proof of design testing, and proof of production testing.

12.04 CONNECTIONS TO EXISTING MAINS

The Contractor shall connect the new pressure pipelines to the existing pressure pipelines at locations as shown on the Contract Drawings and as specified. The Engineer shall be notified at least 2 working days prior to making connections. The time at which the connections are to be made and the manner of making the connections shall be subject to review and acceptance by the Engineer.

The connections to the existing pressure pipeline shall be made to minimize the time during which the existing pressure pipeline will be out of service. The Contractor shall utilize the necessary number of crews and types of equipment and shall work the necessary hours to ensure completion of the connections within the time specified.

12.05 CONSTRUCTION OPERATIONS

Pressure pipelines shall be installed in open trenches, except when another method, such as jacking, boring, or tunneling, is shown on the Contract Drawings, specified, or ordered. Jetting shall not be allowed under roadway, alley, or driveway. All mains shall be laid and maintained at the required lines and grades with fittings, valves and appurtenances at the described locations. All pipe shall be laid to the depth as shown on the Plans, or when a depth is not indicated, with a minimum cover of thirty-six (36) inches outside of the roadway, and forty-two (42) inches under the roadway. Grade lines shall be set by the Contractor. The tolerance of such grades shall not be more than that specified on the drawings. When no tolerance is indicated a tolerance of 0.5 foot shall be used. All other realignments must be approved by the Engineer. The Contractor shall have suitable survey equipment on the site at all times.

All joints, fittings and other appurtenances shall not be covered until inspected by the City Inspector.

Non-compliance will require excavation of all joints and fittings

Pipe and fittings shall not be strung in residential areas more than 3 weeks in advance of pipelaying, unless otherwise approved by the Engineer. The Contractor shall install pipelines, pressure test, disinfect, and restore the ground surface in pipeline segments of 3,500 linear feet or less, except as otherwise approved by the Engineer. The new segment of pipelaying shall not start until restoration has commenced on the previous segment, or as approved by the Engineer.

Pipeline segments shall be pressure tested and disinfected after pipelaying is complete, to minimize inconvenience to the Public, except as otherwise approved by the Engineer.

No excavation shall be left open over a weekend. All pavement openings shall be completely repaired as specified in the Technical Specifications section headed "Surface Restoration" within 7 days of opening, or a temporary asphaltic pavement patch placed and maintained daily.

Where shown on the Contract Drawings or where directed by the Engineer, the Contractor shall remove existing pipelines which are shown to be abandoned. Any such pipe, fitting, etc., shall be removed after the new pipeline (replacing the existing line) is accepted and put into service by the City. Removed pipe and appurtenances 6 inches or larger which are described elsewhere or deemed by the Engineer to be reusable shall be delivered to the City by the Contractor. All material not deemed reusable shall become the Contractor's property and shall be removed from the site by the Contractor. No additional payment will be made for salvaging pipe and fittings.

In general, pipe six inches and smaller abandoned within City rights-of-way shall be capped at both ends and abandoned in place. Grouting is not required unless specifically required by the Engineer or the City. Abandoned pipes eight inches and larger shall be filled with grout or flowable fill unless otherwise directed by the City or the Engineer. Pipe abandoned in rights-of-way owned by municipalities other than the City shall be subject to the requirements of the agency having jurisdiction. All pipes shall be abandoned in a manner which results in the abandoned pipeline not being pressurized.

Short tunneling of pressure pipe shall be constructed as required to protect trees, shrubs, and existing surface or subsurface utilities and structures. Short tunnels shall be constructed to the lengths shown on the Contract Drawings, specified, or directed by the Engineer. The Contractor will be allowed to utilize an auger machine and to push or pull the carrier pipe into the bore without the need of a casing. The Contractor shall install the pipe within the bore hole on a line and grade to allow connection to open cut piping adjacent to the bore hole within pipe jointing alignment limits defined for the pipe in question. The completed installation shall not result in settlement of soil under the obstacle.

Existing fences shall be restored by the Contractor and shall be finished and installed so that the restoration is equal to or better than the original. Only those portions of original fencing or materials there from, that the Engineer approves for re-use, shall be used by the Contractor in fence restoration. All other materials, including lumber, paint, wood preservative, concrete, and metal products shall be furnished by the Contractor.

The cost of protecting, replacing, relocating, and maintaining (including using hay bales) storm and sanitary sewerage facilities shall be included in the various unit price Pay Items, and no separate

payment will be made therefore unless otherwise specified in other Pay Items.

12.06 LAYING AND JOINTING PRESSURE PIPELINES

All pressure pipeline installation shall comply with applicable standards of ANSI/AWWA C600, C605, and C906, and with these Specifications.

Mechanical joint fittings and valves installed in sections of unrestrained pipe, and in blow-offs, shall be installed using ductile iron retainer glands, as set forth in the Technical Specifications section headed "Piping Materials: Ductile Iron Pipe."

PVC push-on fittings for pressure pipelines shall conform to the Technical Specifications section headed "Piping Materials: PVC Pressure Pipe."

Laying and jointing of HDPE pressure pipe shall conform to the Technical Specifications section headed “Piping Materials: HDPE Pressure Pipe.”

Excavation and backfill shall conform to the Technical Specifications section headed "Excavation and Backfill."

In lieu of jacking and boring or pushing of pipe up to 4-inch in diameter, the Contractor may use a soft bore directional drilling process as provided by Flow Mole Corporation or approved equal.

Cover for all pressure pipeline Work, if not shown on the Contract Drawings, shall be not less than:

	2-inch and 4-inch	6-inch and larger
Under roadways and alleys:	36 inches	42 inches
Under grass and sidewalks:	24 inches	36 inches

Unless otherwise noted on the Contract Drawings or in other sections of this Specification, the pressure pipeline shall be handled and installed in strict accordance with the manufacturer's instructions and with the applicable AWWA Standards. If a conflict exists between the manufacturer's instructions and the AWWA Standards, the manufacturer's instructions shall govern.

Prior to installation, all pipe shall be inspected for defects and all lump or excess coatings shall be removed. The inside of the bell and outside of the spigot shall be cleaned prior to joining of all pipe. Caution shall be taken to prevent damage to the pipe during lowering into the trench.

Any defective material shall be removed from the job site immediately. Should a defect be discovered after the item has been placed in the trench, the replacement will be at the Contractor's expense. Materials shall be stored along installation routes in a manner acceptable to the Engineer or as described elsewhere in the Specifications.

Polyethylene wrapping shall be installed on ductile iron pipe and appurtenances where shown on the Contract Drawings or where ordered by the Engineer.

Polyethylene encasement materials and installation shall meet the applicable requirements of ANSI/AWWA C105. Care shall be taken while backfilling to prevent puncturing, tearing, or otherwise damaging the polyethylene wrapping.

The Contractor shall use every precaution during construction to protect the pressure pipeline against the entry of non-potable water, dirt, wood, small animals, and any other foreign material that would hinder or contaminate the operation of the pipeline. Where the groundwater elevation is above the bottom of the trench, the Contractor shall provide suitable dewatering equipment.

All dewatering shall meet the requirements set forth in the Technical Specifications section headed "Excavation and Backfill."

Watertight plugs of an approved type shall be installed in the ends of all pipe, fittings, and valves during 24-hour or longer periods when installation is not in progress, or as required to prevent ditch water, sand, etc. from entering the pipe. Standard plugs shall be inserted into all dead end pipes, tees or crosses; spigot ends shall be capped; flanged ends shall have blind flanges, or sheet metal or plywood caps. Plugs installed for pressure testing shall be fully secured and restrained to withstand the test pressure.

Where plugging is required because of Contract division or phasing for later connection, the ends of such lines shall be equipped with a permanent type cast iron or ductile iron plug/cap or blind flange with or without a blowoff cock, as shown on the Drawings. Installation or removal of such plugging shall be considered incidental to the work and no payment shall be expected for this work by the Contractor.

Concrete thrust blocks of the proper size and type shall be furnished and installed at all locations where a change in the pipe alignment exceeds 7 degrees or dead ends, unless Contract Drawings show that adjacent pipe, in excess of 2 bells each direction, shall be restrained. Concrete thrust blocks used on 12-inch and larger mains shall be poured in place. Precast thrust blocks may be used on mains less than 12-inch in diameter. Thrust block concrete shall conform to the Technical Specifications section headed "Concrete, Masonry, and Reinforcing Steel."

Boring, soft boring, and jacking work other than new services shall strictly conform to all applicable stipulations of the State of Florida Department of Transportation Utility Accommodation Manual, unless otherwise specified. Softbore shall utilize a guided boring system, equal to FlowMole or DirectLine.

12.06.01 Expose Existing Pressure Pipeline and Record Elevation

The Contractor shall expose the existing pressure pipelines prior to the construction stake-out to determine the station, offset, and elevation, before actual construction begins. The Contract Drawings may be modified by the Engineer, as necessary, to accommodate the pressure pipelines which must remain.

12.06.02 Conflict Adjustment of Existing Pressure Pipelines

In some locations existing pressure pipelines intended to remain in service may need to be adjusted horizontally or vertically to avoid conflicts with the proposed storm drains, sanitary

sewers, roadway base, manholes, inlets, or other proposed improvements. The conflict may not be shown on the Contract Drawings.

In the event that a conflict is encountered and confirmed by the Engineer, the adjustment to alleviate the conflict shall be constructed in accordance with the applicable "Obstruction Detail" or as ordered by the Engineer.

12.06.03 Pipe Joints

1. **Standard Mechanical Joints**: In making mechanical joints, the pipe shall be centered in the bells. The surfaces of ductile iron pipe with which the rubber gasket comes in contact shall be thoroughly brushed with a wire brush just prior to assembly of the joint. The surfaces of PVC pipe shall be wiped clean with a cloth and soapy water. A pipe lubricant shall be brushed over the gasket just prior to installation. The gasket and gland shall be placed in position, the bolts inserted, and the nuts tightened finger tight. The nuts shall be tightened by means of a torque wrench, or as approved by the City, in such a manner that the gland shall be brought up evenly into the joint. The following range of bolt torques shall be applied:

Bolt Size (inch dia.)	Range of Torque (foot lbs.)
5/8	45 - 60
3/4	75 - 90
1	70 - 100

   If effective sealing is not obtained at a maximum torque listed above, the joint shall be disassembled and reassembled after thorough cleaning.

2. **DI Pipe Push-On Joints**: In making up the push-on rubber gasket joint, the gasket seat in the socket shall be thoroughly brushed with a wire brush and the gasket shall be wiped with a clean cloth. The gasket shall be placed in the socket with the large round end entering first so that the groove fits over the bend in the seat. A thin film of approved lubricant shall then be applied to the inside surface of the gasket that will come in contact with the entering pipe. The plain end of the pipe to be entered shall be thoroughly brushed with a wire brush and placed in alignment with the bell of the pipe to which it is to be joined. Ends of cut pipe shall be ground to a smooth bevel edge before inserting in bell. The joint shall be made up by exerting sufficient force on the entering pipe so that its plain end is moved past the gasket until it makes contact with the base of the socket.

   Backhoe buckets or excavation equipment are not to be applied directly to the pipe.

3. **PVC Pipe Push-On Joints**: Procedures for the making of PVC pipe push-on joints shall be similar in nature to those set forth in the preceding paragraph (except the bell shall be wiped with a clean cloth). Procedures shall strictly follow the manufacturer's printed instruction for the making of joints. In a like manner, all other PVC pipeline Work shall be performed in accordance with the manufacturer's recommendations.

4. **Restrained Joints**: Ductile iron mechanical joint pipe, fittings, and valves 12-inch and smaller that require restraint shall be installed using ductile iron retainer glands, as specified. The glands shall be installed in accordance with the manufacturer's recommendations. Glands using a frangible bolt for setting the restraining devices shall be tightened with standard wrenches.

   Glands using standard bolts for setting the restraining devices shall be tightened with a torque wrench. The assembly shall be given 2 heavy coats of a bituminous coating after installation.

   Restrained push-on joint pipe, fittings, and valves, where shown on the Contract Drawings, shall be with a restraining gland or restraining gasket, as specified.

   Pipe, fittings, and valve joints shall be restrained at locations shown on the Contract Drawings, or as specified. In addition, all other fittings and valves shall be installed using a ductile iron retainer gland.

   The following shall apply to various restrained joint/pipe size type:

Pipe Size (Inches)	Restrained Joint Type
2	No restrained joint allowed
4 through 12	Mechanical joint/retainer glands Tyton Pipe/Loc Fast Gasket, or equal
16 and larger	Mechanical joint/retainer glands TR Flex, or equal, pipe valves and fittings

12.06.04 Color Coding

Prior to backfilling, all pressure pipelines shall be identified with color coding. The applicable color codes, with light color stabilant, are:

Pipe Use	Color Coding
Potable Water	Safety Blue
Sanitary Sewer	Safety Green
Reclaimed Water	Safety Purple

1. **Coding on the Pipe**: HDPE and PVC pipe shall be colored at the point of manufacture. If black or white pipe must be used, pipe shall have City approved color coded ink lettering stamped on the pipe or shall be continuously taped with plastic adhesive tape using the color coding as stated above. Plastic adhesive tape shall be applied as follows:

   Black and white 2-inch and 4-inch pipe -- continuously taped at top center.

   Black and white 6-inch and larger pipe -- continuously taped at "10, 12, and 2 o'clock."

   Ductile iron pipe shall be continuously painted along the top one-third of the pipe with a 2-part high build epoxy-polyamide paint or approved equal. The paint shall be dry prior to the pipe being installed.

Ductile iron pipe wrapped in color coded polyethylene wrapping is not required to be painted.

2. **Coding above the Pipe**: Pipe shall have 3-inch detectable metallic tape of the proper color placed directly above the pipe and 12-inch below finished grade or 6-inch detectable tape between 12-inch and 24-inch below finished grade.

12.06.05 Valves and Valve Boxes

Valves shall be installed in a closed position, free from all distortion and strain, and left in satisfactory operating condition. Valves shall be tested in place by the Contractor, as far as practicable, and any defects in valves or connections shall be corrected to the satisfaction of the Engineer.

Tapping sleeves shall be pressure tested prior to making the tap.

Valve boxes with stay-put cover shall be vertical and concentric with the valve stem. Any valve box which is moved from its original position, preventing the operation of the valve stem, shall be satisfactorily reset by the Contractor at his expense.

Please see the Specifications for additional information for Valves.

12.06.06 Connections (Tie-ins) and Shutdowns

The Contractor shall furnish all labor and equipment necessary for the connection of approved pipelines to the existing system and the shutdown, removal or disconnection and plugging of existing pipelines as indicated on the Contract Drawings or as directed by the Engineer.

This may be required in instances where existing pipelines are to be abandoned or where a short segment of existing pipeline must be cut out and adjusted either vertically or horizontally to avoid a conflict with a proposed storm drain or storm drain structure, sanitary sewer, or other proposed improvement.

The Contractor shall make all taps and tie-ins required, under the direct observation of the Engineer.

12.07 PIPELINE CLEANING

All mains shall be pigged, cleaned and flushed to remove all sand and other foreign matter if required by the City and Engineer. The Contractor shall be responsible for developing a pigging and flushing plan to be submitted to the Engineer for approval prior to pigging and flushing. The Contractor shall dispose of all water used pigging and for flushing without causing a nuisance or property damage, in accordance with state and local requirements. Any permits or fees required for the disposal of flushing water shall be the responsibility of the Contractor.

Flushing water used by the Contractor shall be taken from an approved metered source. The water utility will provide the meter and designate the source. Potable and reclaimed flushing water shall be at the Contractor’s expense. Reclaimed water should be used for sanitary force mains and potable

water can be used for all service types.

The cleaning of the pipeline shall be done by the controlled and pressurized passage of a polyurethane pig of varying dimensions, coatings and densities as determined by the City through the piping system.

A series of pigs shall be entered into the system at a point as near to the beginning as is logistically and mechanically feasible.

A launching assembly shall be used as the entrance point for the pig. This assembly shall allow for the following:

1. The entering of pigs into the system by providing the means to induce flow from an external source, independent of the flows and pressures immediately available from the system, on the back of the pig to develop sufficient pressure to force the pig through the system.
2. A means to control and regulate the flow.
3. A means to monitor the flows and pressures.
4. A means to connect and disconnect from the system without any disruption to the operation of the system.

The pig shall be removed or discharged from the system at a point as near to the end as is logistically and mechanically feasible.

The contractor shall be responsible for the retrieval of the pig at the discharge point. This may include setting a trap that will not disrupt normal flow and operations but will capture the pig and any debris. A retrieval assembly may also be used but said assembly shall be able to connect and disconnect from the system without any disruption to the operation of the system.

Alternative launching and retrieval methods shall be done with the prior approval of the City.

Any pig that cannot progress through the piping system shall be located by the contractor and removed by excavation of the pipe to remove the blockage. All pipe repairs shall be the responsibility of the contractor and shall be performed with as little disruption to the system as possible.

Any increase in pressure that cannot be accounted for, i.e. fittings or valves or additional cleaning runs, shall be investigated, per the Engineers' review and acceptance, by locating the pig at the beginning of the increased pressure and excavating to determine the cause of the pressure increase. All pipe repairs shall be the responsibility of the contractor and shall be performed with as little disruption to the system as possible.

Final flushing of the cleansed lines shall be performed after the last successful run of the pig as determined by the City. The contractor shall be responsible for all applicable flushing and disinfection requirements for potable water lines.

The contractor shall maintain and provide a report at the end of the cleaning procedure containing the following:

1. The pressures in the pipe during the pigging procedure.
2. Any inline problems encountered during the procedure including all excavations with detailed locations, reason for the excavation and any corrective measures taken to the pipeline.
3. A record of the pigs used, their sizes, styles and other pertinent information regarding what materials were used during the cleaning.
4. An analysis of the condition of the pipeline before and after the cleaning procedure.

12.08 TESTING AND DISINFECTION OF PRESSURE PIPELINES

All new pressure pipelines shall be subjected to a water pressure test between valves. In order to expedite the restoration of certain surface facilities, it may be required that individual sections between valves be tested as soon as the valves are installed. Disinfection shall be accomplished after the pressure test requirements have been met for the entire segment of pressure pipe.

The Contractor shall furnish all labor, materials, equipment, and chemicals to perform the required pressure tests and disinfection. All testing and disinfection will be subject to City inspection. All new valves shall be operated by the Contractor. However, all tie-in valves to the existing water system shall only be operated with the approval of, and in the presence of, the City, and shall be scheduled to be performed during the standard work hours of City staff, unless otherwise approved by the Engineer.

All existing valves shall be operated by the City or by the Contractor under the direct supervision of the City.

Testing and disinfection of pressure pipelines shall be completed per Flushing, Testing, and Disinfection section.

12.09 SURFACE RESTORATION AND MISCELLANEOUS

All surfaces disturbed by the Contractor shall be restored to their original condition in conformance to the Technical Specifications sections headed "Surface Restoration".

Sanitary sewers and laterals which cross a new potable water pipeline with less than 18 inches clear vertical separation, shall be replaced with 20 linear feet of ductile iron pipe, PVC pressure pipe (ANSI/AWWA C900-16), or SDR26 gravity pipe centered on the new pipeline, or as ordered by the Engineer.

Sanitary sewers and/or laterals which conflict with the new pipeline or are damaged by pipeline construction shall be reconstructed with ductile iron pipe, PVC pressure pipe (ANSI/AWWA C900-16), or SDR26 gravity pipe, as ordered by the Engineer.

Each valve box in an unpaved area shall have an 18-inch by 18-inch by 4-inch concrete pad. Pad shall be 1 inch above grade, and sod shall be so placed to maintain this 1 inch.

END OF SECTION

THIS PAGE INTENTIONALLY LEFT BLANK

SECTION 13 - DIRECTIONAL BORING OF PIPE

13.01 GENERAL

A. All existing structures, water and sewer lines, storm drains, utilities, driveways, sidewalks, signs, mail boxes, fences, trees, landscaping, and any other improvement or facility in the construction area that the Contractor disturbs for his own construction purposes shall be replaced to original condition at no additional cost to the City.

B. For “Navigable Waters of the U.S.” reference 33 of the Code of Federal Regulations, Part 329.

C. For “Waters of the U.S.” reference 33 of the Code of Federal Regulations, Part 323.

D. For “Waters of the State” reference Section 62-301 of the Florida Administrative Code.

13.02 TESTING

A. In place soil compaction tests shall be performed by a qualified testing laboratory.

B. Compaction tests shall be taken at every excavation, except in the road crossings or road shoulders; tests are to be taken according to current FDOT Standards.

C. All pipe shall be tested in accordance with the appropriate material specifications.

D. Reference Standards: American Society for Testing and Materials (ASTM), D1557, Moisture-Density Relations of Soils Using 10-lb. Rammer and 18-in. Drop.

E. The density of soil in place shall be a minimum of 95 percent in accordance with ASTM test 1557-70T, Method A or C.

13.03 QUALIFICATIONS

A. Pipe Manufacturer: All pipe and fittings shall be furnished by a single manufacturer who is fully experienced, reputable and qualified in the manufacture of the items to be furnished.

B. Drilling Supervisor: The Contractor shall provide a competent boring specialist who shall remain on the project site during the entirety of the directional boring operation. This includes, but is not limited to, drilling fluid preparation, seaming, boring and pulling. The boring specialist shall have a minimum of five years of experience in supervising directional bores of similar nature, diameter, materials and lengths.

C. Pipe Fusion: All boring and fusing equipment shall be certified for operation. The Contractor responsible for thermal butt fusing pipe and fittings shall have manufacturer certification for performing such work or a minimum of five years of experience performing this type of work. If no certification is available, written documentation of the required work experience shall be submitted for review and acceptance.

D. Drilling Fluid Specialist: The personnel responsible for supervising the supply, mixing, monitoring fluid quality, pumping and re-circulation system proposed for the drilling fluid shall have a written certification issued by the Drilling Fluid manufacturer for performing such work or a minimum of five years of experience performing this type of work. If no certification is available, written documentation of the required work experience for the proposed personnel shall be submitted for review and acceptance.

13.04 SUBMITTALS

A. Detailed description including specifications and catalog cuts for:

1. Shop drawings and catalog data for all HDD equipment.
2. The pipe manufacturer's maximum degree of radial bending allowed for the pipe when full and when empty and pullback force recommended setting.
3. Steering and tracking devices including specific tracer wire.
4. Drilling fluids; the drilling fluid submittal shall include the ratio of mixture to water, including any additives, based on the Contractor’s field observations prior to construction, knowledge and experience with drilling in similar conditions, and any soil data provided in the Contract Documents, which shall be verified by the fluid specialist.
5. Shop drawings for the breakaway swivel, including the method of setting the swivels’ break point and set point to be used.
6. Shop drawings for sizing of the mandrel for pull through testing
7. Pipe assembly procedure, details of support devices, and staging area layout including methods to avoid interference with local streets, driveways, and sidewalks.
8. Details of pipe fusion procedures and copies of the fusion technician qualification certification or documentation.
9. Drilling fluid technician qualification certification or documentation

B. Bore Plan: For all contiguous piping installations over 300 feet in length or any installations for piping larger than 4” in diameter, the Contractor shall submit a Bore Plan that includes the following at least 21 days prior to beginning work:

1. Contact information and experience for the drilling fluid specialist.
2. The number of passes the bore will include to get the product pipe installed.
3. The pilot bore and all reaming bore sizes including the final pullback with the product pipe.
4. Drilling rod length in feet.
5. The pilot bore, pre-ream bores (if any) and pullback production rate in minutes per (drilling) rod to maintain adequate mud flow.
6. Details of the entry and exit pit locations along with entry and exit angles for the bore, drawn to scale, depicting the position of all required equipment, access points, existing facilities to remain in place, existing traffic lanes to be maintained in operation, office trailers and storage sites.
7. The method of fusing or joining pipe of adjacent bores to ensure that the joint is on grade with the installed pipe.

C. If the Contractor is planning on deviating from bid document Profile, then the Contractor is required to submit detailed calculations supporting the modifications. The calculations

shall consist of the following:

1. Predicted and allowable pulling loads and bending stress, and the minimum allowable bending radius (Provide an estimate of the pulling loads and bending stress at characteristic points along the drill path when the curvature of the drill path changes).
2. Calculations for safety factors against ring collapse of the pipe during pullback and confirm ring deflection is within limits.
3. Graphical representation of evaluation of frac-out risks, showing maximum allowable and minimum required pressures at all critical locations along the bore alignment. The calculations shall be conducted by or under the direct supervision of a Professional Engineer licensed in the State of Florida, who shall stamp and seal the calculations.
4. The deviation drawings shall include a HDD Profile, plan view and cross-section. The Contractor is also recommended to submit deviation drawings for larger bores for site layout plans (Rig and Product Pipe Layout site) and pipeline stringing area (rollers).

D. Bore Schedule: For all contiguous piping installations over 300 feet in length or any installations for piping larger than 4-inches in diameter, the Contractor shall submit a detailed schedule for the HDD installation at least fifteen days prior to mobilization. The detail schedule shall identify all major construction activities and durations, with beginning and completion dates shown. The detail schedule shall be updated at least every two weeks or more frequently, as directed by the Engineer, and shall include but not limited to the following items:

1. Pre-construction walk over and inspection
2. Regular Mobilization and set-up
3. Pilot bore
4. Pre-reaming and reaming
5. Layout and thermal butt fusing of pipe
6. Pressure Testing of pipe prior to pullback when practical or as directed by the Engineer.
7. Final reaming and pullback of product pipe.
8. Annulus grouting after installation (optional).
9. Mandrel/pig test to confirm deformations of product pipe are within allowable tolerances.
10. Cleanup, surface restoration, and demobilization.

F. Prepare a Frac-out and Surface Spill Contingency Plan. Submit the plan to the Engineer prior to construction. Submit a letter of intent signed by an authorized representative of Contractor, confirming that the plan will be followed. The contingency plan for inadvertent returns/hydrofracture shall address all potential pathways for release of drilling fluid, and shall address containment, cleanup, and mitigation measures as well as inspection and reporting procedures and points of contact for regulatory and permitting agencies. The Plan shall address releases to the ground surface and controlled releases at any relief wells installed by the Contractor. Describe the location, installation, monitoring, and abandonment procedures for any relief wells. Provide stand-by equipment on-site to recover fluids via vacuum. Describe equipment and procedures

to private residence yard areas to inspect for and clean up fluid releases.

G. The Contractor shall submit an as-built profile of the pilot bore within twenty-four (24) hours of completion of the pilot bore to the Engineer and City Representative. Contractor shall receive written review and acceptance from either party in order to continue with the proposed profile alignment.

H. Furnish a Bore Path Report to the City within seven days of the completion of each bore path. Data collected by the City Representative does not relieve the Contractor from the responsibility of recording his own data. Include the following in the report:

1. Location of project, project name and number
2. Name of person collecting data, including title, position and company name
3. Investigation site location (Contract plans station number or reference to a permanent structure within the project right-of-way)
4. Driller's Log & identification of the detection method used
5. Elevations and offset dimensions of installed pipe as referenced to the drawings
6. Data log of pullback force during product pipe installation
7. All failed bores. Include length of pipe left in place and explanation of failed installation.

13.05 MATERIALS

A. Incidental materials that may or may not be used to install the product depending on field requirements are not paid for separately and will be included in the cost of the installed product.

B. Drilling Fluids shall use a mixture of bentonite clay or other approved stabilizing agent mixed with potable water with a pH of 8.5 to 10.0 to create the drilling fluid for lubrication and soil stabilization. Vary the fluid viscosity to best fit the soil conditions encountered. Contractor shall have appropriate additives for drilling fluid available for different soil conditions that may be encountered. Do not use any other chemicals or polymer surfactants in the drilling fluid without written consent from the City. Certify to the City in writing that any chemicals to be added are environmentally safe and not harmful or corrosive to the product pipe.

C. For drilling operations that will be below waters of the State of Florida, only bentonite free drilling fluids shall be used. Acceptable products are BioMax, manufactured by M-I Swaco, Inc., P.O. Box 2216, Laurel, Mississippi 39440, Phone: (800) 731-7331 or Bio-Bore, manufactured by Baroid Drilling Fluids, Inc., P.O. Box 1675, Houston, Texas 77251, Phone: (731) 987-5900 or approved equal.

D. Identify the source of water for mixing the drilling fluid. Approvals and permits are required for obtaining water from such sources as streams, rivers, ponds or fire hydrants. Any water source used other than potable water may require a pH test.

E. Directional Drilling/Boring pipeline construction shall require the installation of minimum #10 AWG Copper Clad, Extra High Strength Steel tracer wire with minimum 1,150 lb.

break load, with a minimum 45 mil HDPE insulation thickness. Refer to the Specifications for tracer wire details.

F. Breakaway connectors shall be supplied by DCD Design & Manufacturing, Condux International, Inc. or approved equal.

13.06 SITE CONDITIONS

A. Carry out excavation for entry, exit, recovery pits, slurry sump pits, or any other excavation as specified in the Contract documents. Sump pits are required to contain drilling fluids if vacuum devices are not operated throughout the drilling operation, unless approved by the City.

B. Within 48 hours of completing installation of the boring product, clean the work site of all excess slurry or spoils. Take responsibility for the removal and final disposition of excess slurry or spoils. Ensure that the work site is restored to pre-construction conditions or as identified on the Contract Drawings.

C. Exposure of product pipe to sunlight shall be limited to 14 consecutive days unless approved by the City.

D. The pipe shall be supported at intervals along its length with rollers or Teflon pads to minimize frictional forces when being pulled, and to hold the pipe above the ground. Surface cuts or scratches greater than or equal to the maximum defect depth in 3.08 E are not acceptable.

13.07 DAMAGE RESTORATION & REMEDIATION

A. The Contractor shall take responsibility for restoration for any damage caused by heaving, settlement, separation of pavement, escaping drilling fluid (frac-out), or the directional drilling operation, at no cost to the City.

B. When required by the City, provide detailed Contract Drawings which show how damage to any roadway facility will be remedied. These details will become part of the Record Drawings Package. Remediation Plans must follow the same guidelines for development and presentation of the Record Drawings. When remediation plans are required, they must be approved by the City before any work proceeds.

C. For HDD operations that will be below waters of the State of Florida, the contractor shall be responsible for any damage caused by the drilling operation, including, but not limited to, fracturing of the channel bottom. Any State or Federal required environmental cleanup due to the release of drilling fluids into State waters shall be at the Contractor's expense. The Contractor may at his own expense increase the depth of his drilling operations upon the approval from the City.

13.08 QUALIFICATIONS FOR REJECTION OF DIRECTIONAL BORE

A. The City may reject any portion of the work that is deemed to be non-responsive to the Contract requirements or not in conformance with approved Contract Drawings and

submittals, and for other factors including the following:

1. Failed Bore: When there is any indication that the installed product has sustained damage, stop all work, notify the City and investigate damage. The City may require a pressure and / or mandrel test at no additional cost to the City and shall have a City representative present during the test. Perform all testing within 24 hours unless otherwise approved by the City. Furnish a copy of the test results and all bore logs to the City for review and acceptance. The City is allowed up to 5 working days to approve or determine if the product installation is not in compliance with the specifications.
2. Obstructions: If an obstruction is encountered during boring which prevents completion of the installation in accordance with the design location and specification, the pipe may be taken out of service and left in place at the discretion of the City.
3. Pull-back Failure: If the installed breakaway device should fail during pull back.
4. Loss of Drilling Fluids: If the drilling fluid is “lost” during the pull back of the product and cannot be regained within the required timeframe of the manufacturer or if more than a reasonable amount of fluid is used to fill an unknown void and flow cannot be regained. No pipe shall be pulled without visible flow of drilling fluid.
5. Test Failure: If the pipe shall fail a hydraulic pressure test or mandrel test as specified by the City.
6. Damaged Pipe: If at any time when the product is pulled back and any exposed areas have a greater than allowable “gouging” or visible marring of the pipe per the table in 3.08 G.
7. Alignment Tolerance Exceeded: If the vertical and horizontal limits are not within tolerances.
8. Defective Material: Any other defect in material or workmanship which would affect the quality, performance, or installation life of the installed pipeline.

B. Remediation: All rejected bores shall be at the Contractor’s expense to correct and provide a satisfactory installed product. The Contractor shall submit to the City a revised installation plan and procedure for review and acceptance before resuming work. The City may require non-compliant installations to be filled with excavatable flowable fill or to be completely removed at no additional cost to the City.

13.09 PRODUCT LOCATING AND TRACKING

A. The City recognizes walkover, wire line, and wire line with surface grid verification, or any other system as approved by the City, as the accepted methods of tracking directional bores. Use a locating and tracking system capable of ensuring that the proposed installation is installed as intended. The locating and tracking system must provide information on:

1. Clock and pitch information
2. Depth
3. Transmitter temperature
4. Battery status
5. Position (x,y)

6. Azimuth, where direct overhead readings (walkover) are not possible (i.e. sub aqueous)

B. Ensure proper calibration of all equipment before commencing directional drilling operation.

C. Prepare the Driller's Log. Take and record alignment readings or plot points such that elevations on top of and offset dimensions from the center of the product to a permanent fixed feature are provided. Such permanent fixed feature must have prior approval of the City. Provide elevations and dimensions at all bore alignment corrections (vertical and horizontal) with a minimum distance between points of 10 feet. Provide a sufficient number of elevations and offset distances to accurately plot the vertical and horizontal alignment of the installed product.

13.10 PRODUCT BORE HOLE DIAMETER

Minimize potential damage from soil displacement/settlement by limiting the ratio of the bore hole to the product size. The size of the back reamer bit or pilot bit, if no back reaming is required, will be limited relative to the product diameter to be installed as follows:

Table 2-1. Recommended Relationship between Product Diameter and Reamed Diameter

Product Diameter	Reamed Diameter
< 8"	Diameter of product + 4"
8" – 24"	Diameter of product x 1.5
> 24"	Diameter of product + 12"
*Horizontal Directional Drilling Good Practices Guidelines – HDD Consortium	

13.11 EQUIPMENT REQUIREMENTS

A. The HDD equipment selected by the Contractor shall be capable of drilling, steering, tracking, reaming and installing the pipeline through all the subsurface conditions that may be present at the site.

B. Match equipment to the size of pipe being installed. Obtain the City's review and acceptance for installations differing from the above chart. Ensure that the drill rod can meet the bend radius required for the proposed installation.

C. All HDD equipment shall have an electronic data logger to record pull back force during all pipe installations.

D. All HDD equipment that has the capability to exceed the maximum recommended pulling force shall have a breakaway swivel properly attached to the product pipe that will release if the pullback force exceeds the pipe manufacturer's recommended pulling force.

13.12 THRUST / PULLBACK REQUIREMENTS

The Contractor shall provide as part of the required working drawings submittal complete data regarding the operational and maximum thrust or pulling forces to be used for the initial drill head and back-reamer installations, and the final pull-back of the pipe. Gages or other measurement tools shall be used to monitor the forces being used.

13.13 INSTALLATION PROCESS

A. Contractor shall contact the City and Engineer at least forty-eight (48) hours before each of the following activities:
   1. The setup of a drill rig pit,
   2. The start of the pilot bore,
   3. The pull back of the product pipe. Upon completion of the pilot-hole phase of the operation, a complete set of as-built records shall be submitted in duplicate to the Engineer. These records shall include copies of the plan and profile drawing, as well as directional readings recorded during the drilling operation.

B. Ensure adequate removal of soil cuttings and stability of the bore hole by monitoring the drilling fluids such as the pumping rate, pressures, viscosity and density during the pilot bore, back reaming and pipe installation. Relief holes can be used as necessary to relieve excess pressure down hole. Obtain the City's review and acceptance of the location and all conditions necessary to construct relief holes to ensure the proper disposition of drilling fluids is maintained and unnecessary inconvenience is minimized to other facility users.

C. At all times during the pilot bore the Contractor shall provide and maintain a bore tracking system that is capable of accurately locating the position of the drill head in the x, y, and z axes. The Contractor shall record these data at least twice per drill pipe length or every fifteen (15) feet, whichever is more frequent.

   1. Contractor shall monitor and record x, y, and z coordinates relative to an established surface survey benchmark, from downhole survey data using downhole wireline system. "Tru-Tracker" energized surface grid, or equivalent, shall be installed and used to supplement the wireline system. The "Tru-Tracker" grid shall encompass the entire area of the bore including underwater across the water. Alternatively, the Contractor may propose fixed "TruTracker" grids on land outside the waterway, supplemented by moveable grids on floating templates that can be temporarily anchored and surveyed while drilling the pilot hole. The moveable template should be sufficiently large to encompass the active drilling area for a two hour drilling period and should be at least as wide as the maximum depth of the bore. The grids shall be surveyed to establish horizontal and vertical position to 0.1 feet accuracy. The data shall be continuously monitored and recorded at least twice per drill pipe length or every fifteen (15) feet, whichever is most frequent.

   2. Deviations between the recorded and design bore path shall be calculated and reported on the daily log. If the deviations exceed tolerances specified

elsewhere, such occurrences shall be reported immediately to the City and Engineer. The Contractor shall undertake all necessary measures to correct deviations and return to design line and grade.

3. Drilling fluid pressures and flow rates shall be continuously monitored and recorded by the Contractor. The pressures shall be monitored at the pump and within the annular space with a downhole pressure-sensing tool located within thirty (30) feet of the drilling head.

4. Maximum allowable drilling speeds shall be calculated by the Contractor for pilot boring and each reaming pass and shall not be exceeded for pilot boring or reaming passes. Measurements shall be taken every fifteen (15) feet.

5. The Contractor shall measure and record drilling fluid viscosity and density at least three times per shift with at least two hours between readings, using calibrated Marsh funnel and mud balance. These measurements shall be included in daily logs submitted to the Engineer. The Contractor shall document modifications to the drilling fluids, by noting the types and quantities of drilling fluid additives and the dates and times when introduced. The reason for the addition of drilling fluid additives or other modifications shall be documented and reported.

6. The Contractor shall measure and record the pH on a regular basis (three times per shift with at least two hours between readings) with pH strips, paper or a pH meter.

7. The drilling fluid report shall include desired mud properties including weight, viscosity in cP, yield point in lb/100 sf, measured mud weight, funnel viscosity, plastic viscosity, fluid loss, % solids, chlorides, and detailed log of type and quantity of bentonite and all additives.

8. The Contractor shall constantly monitor and record the circulating volume, particularly for the early detection of drilling fluid losses, or thinning, or the danger of borehole collapse. Ground upheavals can also be detected early from such differences, and necessary action can be implemented to prevent further damage.

9. The Contractor shall constantly monitor and record the solid (sand) content to assure there is no significant increase, which can diversely impact efficiency of the circulations system.

D. The Contractor shall determine the pull-back rate in order to allow the removal of soil cuttings without building excess down-hole pressure and to avoid local heaving, or spills. Contain excess drilling fluids at entry and exit points until they are recycled and separated from excavated materials or removed from the site or vacuumed during drilling operations. Ensure that entry and exit pits and storage tanks are of sufficient size to contain the expected return of drilling fluids and soil cuttings. The bored hole shall always be maintained full of drilling fluids for support of surfaces, and the fluid re-circulation equipment shall operate continuously until the pipe installation is completed

and accepted by the City.

E. Ensure that all drilling fluids are disposed of or recycled in a manner acceptable to the appropriate local, state, or federal regulatory agencies. When drilling in suspected contaminated ground, test the drilling fluid for contamination and appropriately dispose of it. Remove any excess material upon completion of the bore. If in the drilling process it becomes evident that the soil is contaminated, contact the City immediately. Do not continue drilling without the City's approval.

F. The timing of all boring processes is critical. Install a product into a bore hole within the same day that the pre-bore is completed to ensure necessary support exists. Once pullback operations have commenced, the operation shall continue without interruption until the pipe is completely pulled into the borehole.

G. All prepared pipe that is being used for installation shall be adequately supported off the ground along the entire length to avoid damaging of the material during pullback due to ground surface conditions. Surface cuts or scratches greater than or equal to the maximum defect depth are not acceptable.

Pipe Size In.	Max. Defect Depth In.
4	1/16
6	1/11
8	5/32
10	3/16
12	1/4
> 12	Per Pipe Manufacturer's Recommendations

H. The drilling fluid specialist shall remain on the project site during the entirety of the directional boring operation to ensure proper mixture and production of drilling fluids needed for the bore.

I. Upon successful completion of the pilot hole, the borehole shall be reamed to a minimum of 25 percent greater than the outside diameter of the pipe being installed.

J. For bores with more than two radii of curvature (entrance and exit), the borehole should be reamed up to 50 percent larger than the outside diameter of the carrier pipe. Prereaming may be necessary dependent on size of material to be pulled.

K. Additional passes for prereaming may be required for larger pipe. Incremental increases shall be used as needed until appropriate bore hole size has been achieved.

L. Prereaming must be accomplished with no product attached to the reamer head on all bore pipe 6-inches and larger. The bore product may be pulled back on final pass of prereaming upon prior approval from the City.

M. After reaming the borehole to the required diameter, the pipe shall be pulled through the hole. In front of the pipe shall be a breakaway swivel and barrel reamer to compact the borehole walls.

N. The Contractor shall not ream at a rate greater than the drilling equipment and drilling fluid system are designed to safely handle.

O. Install all piping such that their location can be readily determined by electronic designation (tracer wire) after installation.

1. For all pipe installations, externally attach two (2) tracer wires; to the top of product pipe and secure in place with duct tape or 10-mil thickness polyethylene pressure sensitive tape at every joint and at 5 foot intervals.

P. Connect any break in the conductor line before construction with an electrical clamp, or solder, and coat the connection with a rubber or plastic insulator to maintain the integrity of the connection from corrosion. Clamp connections must be made of brass or copper and of the butt end type with wires secured by compression. Soldered connections must be made by tight spiral winding of each wire around the other with a finished length minimum of 3 inches overlap. Tracking conductors must extend 2 feet beyond bore ends. Test conductors for continuity. Each conductor that passes must be identified as such by removing the last 6 inches of the sheath. No deductions are allowed for failed tracking conductors. Upon completion of the directional bore, the Contractor shall demonstrate to the City that the wire is continuous and unbroken through the entire run of the pipe by providing full signal conductivity (including splices) when energizing for the entire run in the presence of the City Representative. If the wire is broken, the Contractor shall repair or replace it at no additional cost to the City.

Q. The pilot bore shall follow the design path of the bore shown on the Drawings:

1. Horizontal and vertical deviations shall be less than plus or minus three feet from the design path centerline. The Contractor shall continuously monitor horizontal and vertical position and record the position at least twice per drill pipe length, or at fifteen (15) feet intervals, whichever is most frequent.
2. The radius of curvature shall not be less than that shown on the Drawings. The radius of curvature shall be calculated over the distance of three drill pipe sections. If design radius of curvature is exceeded, the Contractor shall re-drill the pilot hole at no extra cost to the contract.
3. The location of the entry and exit points shall be as shown on the Drawings. The Contractor shall be solely responsible for all work necessary to correct excessive deviations from line and grade, including re-drilling, redesigning connections, and acquiring additional easement, at no additional cost to the Owner and without schedule extension.

R. Inadvertent Returns (Frac-Outs) and planned returns (at relief wells):

1. Contractor shall be responsible for avoiding any impact to existing utilities, structures, facilities, pools, and waterways in the Project area during the drilling operation. If the drilling fluid starts leaking to the surface (other than at the entry and exit points or relief wells), or if fluid loss results in surface movement, Contractor shall cease drilling until fluid loss volumes can be brought under control to minimize any inadvertent returns in the Project area. In such event, notify Engineer immediately. The Contractor shall clean up any locations where

drilling fluid surfaces, including releases at relief well locations. Contractor shall pay particular attention to the potential of inadvertent returns washing out along existing utility crossings and shall have preventive measures in place to prevent these occurrences from happening. Contractor shall be fully responsible for all damages caused by the force main installation operations. The pilot bore shall be pre-reamed and reamed using equipment and methods submitted by the Contractor. The Contractor shall completely ream the borehole to the final diameter prior to pull back, when practical or as directed by the Engineer.

O. The Contractor shall perform hydrostatic water pressure test in accordance with the manufacturer's guidelines prior to product pipe pullback.

13.14 PIPELINE TESTING

A. Hydrostatic Testing
   1. Refer to Specifications for pipe material.

B. Mandrel Deflection Testing Process

   1. The deflection test for flexible pipe systems shall be performed by pulling a mandrel through the pipeline. The mandrel shall have a diameter equal to 80 percent of the inside diameter of the pipe system being tested. When the mandrel cannot be pulled through the pipeline the Contractor shall locate and correct the defect to the satisfaction of the City. After the defect is corrected and trench backfilled, the section of line shall then be retested to compliance.

   2. Deflection tests shall be performed not sooner than 24 hours after completion of the pipe pull-back. The Contractor shall take measures to ensure the pipe is clean as not to interfere with the mandrel test.

   3. The mandrel types that can be used are:

      a. a rigid, nonadjustable, odd number of legs (9 legs minimum), mandrel having an effective length not less than its nominal diameter; and to be fabricated of steel, fitted with pulling rings at each end, stamped or engraved on some segment other than a runner indicating the pipe material specification, nominal size and be furnished in a suitable carrying case labeled with the same data as stamped or engraved on the mandrel.

      b. If approved by the City, a smaller diameter piece of similar material that is approximately double the nominal diameter in length and meets the 80% reduction of the inside diameter of the pipe being tested. The pipe length may need to be adjusted to ensure the pipe section cannot become skewed and become lodged; this may cause the test to fail.

   4. The mandrel shall be pulled through the pipe by hand to ensure that maximum allowable deflections have not been exceeded or that "necking" has not occurred. Prior to use, the mandrel shall be inspected by City personnel. Use of an unapproved mandrel or a mandrel altered or modified after inspection will

invalidate the test. If the mandrel fails to pass, the pipe will be deemed over deflected or necked.

5. Over deflected or necked pipe shall be abandoned and reinstalled. The replaced pipe shall be tested for deflection not sooner than 24 hours after installation.

C. The following deficiencies in the flexible pipe system installation shall be corrected by the Contractor at no cost to the City:

1. Over deflections
2. Stretched or “Necked” Pipe
3. Damaged Pipe
4. Improper Pipe Welds
5. Infiltration Points
6. Debris in the line

D. The City will not accept a credit, maintenance bond, or any other form of compensation in lieu of corrective measures that may be required to correct any sections of flexible pipe system that are improperly installed or do not meet the requirements of these specifications. In addition, all corrective measures proposed by the Contractor shall be approved by the City. In addition, should repairs of the flexible pipe system be accomplished by the use of any unauthorized materials or procedure, the City will require replacement of those substandard portions or repairs made to conform to the requirements of these specifications.

END OF SECTION

THIS PAGE INTENTIONALLY LEFT BLANK

SECTION 14 - JACKING AND BORING

14.01 SCOPE OF WORK

The Contractor shall furnish all labor, equipment, materials and incidentals required to install road or railroad crossings as shown on the Contract Drawings and as specified herein.

The Contractor is responsible for verifying the location of all utilities in the ground before commencing the jack and bore operation. No compensation will be allowed for labor or materials for unused casing. The Contractor will be responsible for all damage incurred to roadways or utilities by his operation.

14.02 OPERATIONS IN THE CITY OF ST. PETE BEACH OR STATE OF FLORIDA PROPERTY

All work affecting The City of St. Pete Beach, Florida Department of Transportation (FDOT), any other governmental agency's right-of-way or facilities, or railroad right-of-way shall be carried out to the full satisfaction of the applicable Department's authorized representative. The Contractor shall be responsible to meet any and all requirements of the Department of Transportation, railroad, or other agency pertaining to the specific project and shall conduct all his work accordingly.

Prior to the start of the jacking operation, a detailed jacking plan shall be submitted to the City for review and acceptance. No work shall be permitted until the submittals are accepted.

Prior to construction, a minimum of three (3) working days written notice prior to start of the actual work shall be given to the City and to the FDOT or other applicable agency.

A Bore Path Report shall be submitted with in three (3) days of completion of the bore.

The Contractor shall install, maintain and leave in place any sheeting, underpinning, cribbing and other related items (other than that required for the jacking pits) to support any structures or facility on the right-of-way owned by either The City of St. Pete Beach, FDOT or other governmental agency or railroad entity. The Contractor, at his expense, may be directed by FDOT, other applicable agency, or the City, to leave sheeting in place.

The Contractor shall perform all necessary soil test borings to determine actual soil conditions and shall utilize the results of said borings to determine the procedures required for each jack and bore operation, including, but not limited to, the presence of rock and necessary dewatering requirements.

No wires, equipment, or other appurtenances shall be permitted to be placed across or pass across State property without the express written permission of FDOT’s authorized representative.

All equipment used by the Contractor on State property may be inspected by the State and shall not be used if it is deemed unsatisfactory by an authorized State representative. State

highways shall be kept free of obstructions at all times.

No blasting shall be permitted under or adjacent to any State highways.

The Contractor shall be responsible for all damages arising from his negligence or failure to comply with any State or The City of St. Pete Beach regulations or requirements or deviations from the Contract Documents.

All State highway crossings shall be performed and completed in a manner fully satisfactory to the Department of Transportation and The City of St. Pete Beach.

14.03 SHOP DRAWINGS

The Contractor shall furnish working drawings showing all fabrication and construction details for the jacked crossings.

14.04 SUBMITTALS

Contractor shall submit a Jacking Plan that includes the following:

1. Site layout plan for entry and exit pit locations, drawn to scale, depicting the position of all required equipment, access points, existing facilities to remain in place, existing traffic lanes to be maintained in operation, and storage sites.
2. Qualification information on jack/bore contractor.
3. Manufacturer's information on equipment to be used.
4. Methods and materials for retaining walls for jacking and receiving pits.
5. Bore Report that details final alignment, dimensions, and record documentation.

14.05 CASING PIPE

All casings shall be installed accurately to line and grade and shall meet all requirements of the prevailing rights-of-way holder. Casings shall be new and of domestic material and manufacture.

Pipe casing shall be welded steel conforming to the requirements of AWWA C200 and ASTM A-139,Grade B. The pipe shall be coated internally and externally with Tnemec 46H-413 Hi-Build Tneme-tar per manufacturer's recommendations.

Joints shall be full penetration butt welded in accordance with the requirements of AWWA C206. The joints shall be double groove welded with continuous circumferential welds and field lined and coated in accordance with AWWA C203.

All casings shall be in conformance with the specifications as shown on the plans and detail sheets.

14.06 CARRIER PIPE

All carrier pipe shall be Class 50 ductile iron pipe with joint restraints or fully restrained PVC pipe.

14.07 CASING SPACERS

The carrier pipe shall be installed in the casing on spacer skids. The supports shall be dimensioned to center the carrier pipe in the casing with a top clearance of one-half inch. The height of the supports and runners combined shall be sufficient to provide not less than three-quarter inch between the casing pipe and outside diameter of the carrier pipe joints.

Adequate casing spacers shall be provided to properly support the carrier pipe and maintain pipe deflection within the pipe manufacturer's requirements. In any case, not less than three spacers for each individual length of carrier pipe shall be provided.

For metallic casing spacers, bolts, nuts, and washers shall be 316 stainless steel. Shell shall be min. 14 gauge 304 stainless steel. Risers shall be min. 10 gauge 304 stainless steel.

For metallic casing spacers, each shell shall be lined with a min. thickness of 0.090" ribbed PVC/EPDM extrusion with a min. Durometer "A" 85-90 hardness.

For metallic casing spacers, each riser shall have runners (bearing surfaces) made of ultra-high molecular weight polyethylene (UHMWPE) or glass filled polymer plastic to provide abrasion resistance and a low coefficient of friction.

For nonmetallic casing spacers, the runners (bearing surfaces) shall be of a projection type. The projections shall be made of preformed sections of HDPE or virgin polypropylene and shall conform to ISO 9001:2000 for strength and quality. The casing spacers shall be sized in accordance to the manufacturer's recommendations.

14.08 TUNNEL LINER PLATES

Tunnel liner plates shall be asphalt coated galvanized steel plates. The Contractor shall submit plans signed and sealed by a registered Engineer in the State of Florida and written installation procedures with his request for approval.

14.09 CASING END SEALS

Contractor shall provide properly sized rubber end seals to completely close both openings on either side of the casing.

Ends seals shall be pull on (seamless) or wrap around with 316 stainless steel straps for securing to the carrier pipe and the casing.

The seals shall have min. thickness of 1/8 inch of specially compounded synthetic rubber.

14.10 CONSTRUCTION

The Contractor shall provide all labor, material, equipment and appurtenances required for jacking the casing pipe beneath the roadway or railroad tracks. The casing pipe shall be welded steel pipe and jacked in one continuous operation at the locations shown on the drawings. Once the operation starts, jacking shall not be discontinued. Proper alignment and elevation of the casing pipe shall be consistently maintained throughout the jacking operation. The casing pipe shall be installed by jacking and to the length shown on the plans.

The installation of the casing and boring at the head of the casing shall be one simultaneously. Track guides of sufficient length to carry the power unit and pipe installation shall be used, in order to maintain proper line and grade of the casing. Surplus and unsuitable excavated material shall be disposed of by the Contractor.

The Contractor shall shore the jacking pits with sheeting or such other materials as required. Sheeting shall be driven to a sufficient depth below the invert of the steel casing pipe to resist any pressure developed by the soil outside the jacking pit. Sheeting shall terminate not less than 3-feet, 6-inches above existing grade. The Contractor shall install adequate protective railing or temporary fences around the pits within the crossing right-of-way at all times during construction.

The sections of casing pipe shall be field welded in accordance with the applicable portions of AWWA C206 for field welded water pipe joints. Steel casing pipes shall receive one (1) internal and external coat of Tnemec 46H-413 Hi-Build Tneme-tar applied in accordance with manufacturer's recommendation.

All surfaces shall be smooth and uniform without bulges, dents, or warping of lengths, and only new pipe shall be used. Finished lengths of pipe shall be furnished with beveled cut ends to facilitate proper welding of transverse joints. The diameter and wall thickness of the pipe shown on the drawings is the minimum required and no extra compensation shall be claimed by the Contractor if a larger and thicker pipe is used. It will be the Contractor's responsibility in the event that the casing does buckle or collapse during these operations.

At the completion of the jacking operations, the Contractor shall be required to leave all sheeting in place. The top of the sheeting shall be cut off 36-inches below finished grade.

The Contractor shall be responsible for preventing voids outside the casing pipe. Should they occur, the Contractor may be directed to fill them with grout in a method approved by the City. The Contractor shall exercise care in the sleeve removal to prevent voids.

The Contractor shall be responsible for furnishing, installing and removing the thrust block or restraint which was employed in driving the sleeve forward. No additional payment for the jacking restraint shall be made other than the unit price for this item. The entire jacking operation shall be discussed and accepted by the City prior to commencing jack and bore operation. After completion, the backup structures shall be removed in part or whole to permit construction of the pipeline in the sleeve.

Tunneling for the installation of large carrier pipe may be substituted for jacking and boring

when approved by the Engineer.

14.11 INSTALLING CARRIER PIPE IN CASING PIPE

The Contractor shall install the carrier pipe in full conformity with the Contract Documents. The pipe shall be installed to the lines and grades required within the casing pipe and placed to the acceptance of the City. The carrier pipe shall be braced to the side and the top of the casing pipe to prevent flotation or motion.

A bulkhead or rubber end seals shall be placed at each end of the casing pipe to keep the surrounding soil and material from migrating into the voids of the casing pipe.

14.12 TESTING

The pipe shall be tested as provided in the Contract Documents.

END OF SECTION

THIS PAGE INTENTIONALLY LEFT BLANK

SECTION 15 - FLUSHING, TESTING AND DISINFECTION

15.01 SCOPE OF WORK

A. Flushing, Pressure Testing, and Disinfection of systems including, but not limited to, the pipelines shown in the Contract Documents.

B. Contractor shall furnish all necessary pumps, hoses, piping, fittings, meters, gauges, chemicals and labor to conduct specified testing.

C. Testing shall be repeated at the Contractor's expense until satisfactory results are achieved.

15.02 REFERENCES

A. AWWA C651 - Standard for Disinfecting Water Mains.

B. UNI-B-6 - Recommended Practice for Low-Pressure Air Testing of Installed Sewer Pipe

C. ASTM F1417 - Standard Test Method for Installation Acceptance of Plastic Gravity Sewer Lines Using Low-Pressure Air

D. AWWA C600 – Standards for Installation of Ductile-Iron Water Mains and Their Appurtenances.

E. AWWA C605 - Standard for Underground Installation of Polyvinyl Chloride (PVC) Pressure Pipe and Fittings for Water.

F. ASTM 2164 - Standard Practice for Field Leak Testing of Polyethylene (PE) and Crosslinked Polyethylene (PEX) Pressure Piping Systems Using Hydrostatic Pressure

15.03 SUBMITTALS

A. Test Reports: Indicate results comparative to specified requirements. Submit two (2) copies of test results to Engineer in accordance with Submittal specifications.

B. Final approval of the bacterial samples shall be received from the Florida Department of Environmental Protection prior to the time that the system is placed into operation. Sampling procedures shall be done in accordance with FDEP requirements.

C. Bacteriological sampling locations shall meet FDEP requirements and be taken where shown on the drawings and as directed by the Engineer at no additional cost to Owner. Costs for all bacteriological testing shall be borne by the Contractor.

15.04 QUALITY ASSURANCE

A. Perform Work in accordance with these specifications, applicable utility provider standards, and the applicable reference standards listed in Section 1.03 above.

15.05 REGULATORY REQUIREMENTS

A. Conform to applicable FDEP requirements for performing the work of this Section.

15.06 DISINFECTION CHEMICALS

A. Chemicals: The disinfecting agent shall be sodium hypochlorite solution ANSI/AWWA B303 or liquid chlorine ANSI/AWWA B301. Dry hypochlorite, similar to "HTH" or equal may also be used as the disinfecting agent. Bleach or Clorox is not acceptable.

15.07 FLUSHING AND PRESSURE TESTING - PIPING

The Contractor shall furnish and install suitable temporary testing plugs or caps for the water lines, all necessary pressure pumps, hose, pipe connections, meters, gauges and other similar equipment, and all labor required, all without additional compensation for conducting pressure and leakage tests and flushing of the new water lines. Flushing and pressure testing shall be conducted in the following order:

A. After all piping lines have been installed and before pressure testing and final connections to equipment, each run of pipe shall be thoroughly flushed so as to remove all debris and foreign matter from the piping and equipment. Clean and flush all piping using potable water. Cleaning and Flushing shall be achieved by pigging with two (2) polyurethane foam pigs as manufactured by Girard Poly-Pig Inc. or "an approved equal". For watermain installation, the Contractor must ensure that there will be no contaminated water re-entering the main where the pig is flushed out, or it will be re-pigged at the Contractor's expense. Each pig will run through the line prior to running the second pig. On short runs (100 feet or less), or small lines (less than 4"), cleaning shall be accomplished by flushing with a minimum velocity of 2.5 feet per second. Contractor shall furnish and install required pig launch and exit assemblies. Non-abrasive pigs shall be employed. Flushed water may be discharged to the closest public catch basins and be coordinated with the City. Contractor to provide means of discharging water to catch basins at Contractor's expense.

B. Pressure and leakage tests shall be conducted in the presence of the Engineer, or his representative. All pressure mains, fittings, water services, and appurtenances shall undergo pressure and leakage tests. The Contractor will provide all necessary apparatus including a suitable pressure gage, pump, measuring device, piping connections and fittings and the necessary labor to conduct the test. Leakage is defined as the quantity of water added to the pipe being tested during the test period. The Contractor shall submit to the Engineer the testing pattern he proposes to follow prior to testing for the Engineer's approval. The Contractor shall not test more than 1,500 feet of pipe in a single test without approval from the Engineer.

C. In preparation for pressure testing the following parameters must be followed:

1. All air must be vented from the pipeline prior to pressurization. This may be accomplished with the use of the air relief valves or corporation stop valves, vent piping in the testing hardware or end caps, or any other method which adequately allows air to escape the pipeline at all high points. Venting may also be

accomplished by 'flushing' the pipeline in accordance with the parameters and procedures as described in AWWA C600/C605.

2. The pipeline must be fully restrained prior to pressurization. This includes complete installation of all mechanical restraints per the restraint manufacturer's guidelines, whether permanent or temporary to the final installation. This also includes the installation and curing of any and all required thrust blocking. All appurtenances included in the pressure test, including valves, blow-offs, and air-relief valves shall be checked for proper installation and restraint prior to beginning the test.
3. Temporary pipeline alignments that are being tested, such as those that are partially installed in their permanent location shall be configured to minimize the amount of potentially trapped air in the pipeline.

15.07.01 PRESSURE TESTING DUCTILE IRON AND PVC PIPING SYSTEMS:

1. The test pressure for piping constructed of ductile iron and PVC pipe shall be a minimum of 150 psi and this pressure shall be maintained for a period of not less than two hours. Tests shall be made between valves and as far as practicable and as approved by the Engineer. Potable water from the distribution system shall be used. Pressure shall not vary more than five (5) psi for piping during the test periods or as approved by the Engineer. Additionally, allowable leakage shall be computed on the basis of AWWA C-600, C-605 where practical.
2. All leaks evident at the surface shall be uncovered and repaired regardless of the total leakage as indicated by the test, and all pipes, valves and fittings and other materials found defective under the test shall be removed and replaced at the Contractor's expense. Tests shall be repeated until leakage has been reduced below the allowable amount.
3. Should, in the judgment of the Engineer, it not be practical to follow the foregoing procedures exactly for any reason, modifications in the procedure shall be made as approved by the Engineer and the City.

15.07.02 PRESSURE TESTING HDPE PIPING SYSTEMS:

1. The HDPE pipe installed by the directional drill method shall be pressure tested after the entire length is installed.

2. The test pressure for all piping systems shall be a minimum of 150 psi and this pressure shall be maintained for a period of two hours. Testing procedure shall be in accordance with ASTM F2164 and generally as follows.

    a. Take safety precautions as required and as specified in ASTM F2164.
    b. Completely fill pipe with clean water and remove all air from pipe to be tested.
    c. Allow water in pipe to equalize to a common temperature with surrounding ground/groundwater for 24 hours
    d. With air removed and temperature equalized, gradually bring pipe being tested to test pressure plus 10 psi. If test pressure cannot be achieved, discontinue testing and correct fault.

e. Add make-up liquid as required to maintain test pressure plus 10 psi over a 4 hour period.
f. Test Phase - Immediately following the end of the 4 hour period, reduce pressure by 10 psi and monitor pressure for 1 hour. Do not increase pressure or add make up water.
g. Pass/Fail Criteria - If no leakage is observed, and pressure during the test phase remains steady (within 5% of the test pressure) for the 1 hour test phase period, a passing test is indicated.
h. Retesting – If retesting is necessary, depressurize the test section in accordance with ASTM F2164 and correct any faults. Do not attempt to correct any faults while the system is under pressure.
i. Allow the test section to "relax" for at least 8 hours before re-pressurizing. After the relaxation period, repeat the initial expansion and test phases as described above.
j. All leaks shall be repaired regardless of the total leakage as indicated by the test, and all pipes, valves and fittings and other materials found defective under the test shall be removed and re placed at the Contractor's expense. Tests shall be repeated until leakage has been reduced below the allowable amount.
k. All visible leaks shall be repaired regardless of the total leakage as indicated by the test, and all pipes, valves and fittings and other materials found defective under the test shall be removed and replaced at the Contractor's expense. Tests shall be repeated until leakage has been reduced below the allowable amount.
l. Should, in the judgment of the Engineer, it not be practical to follow the foregoing procedures exactly for any reason, modifications in the procedure shall be made as approved by the Engineer. In any event, the Contractor shall be responsible for the ultimate tightness of the watermain within the preceding requirements.

15.07.03 PRESSURE TESTING FUSIBLE PVC SYSTEMS:

1. Fusible PVC pipe installed by the directional drill method shall be pressure tested after the entire length is installed.

2. The test pressure for the water piping constructed fusible PVC pipe shall be a minimum of 150 psi. This pressure shall be maintained for a period of not less than two hours. Tests shall be made between valves and as far as practicable and as approved by the Engineer. Potable water from the distribution system shall be used. Pressure shall not vary more than five (5) psi for piping during the test periods or as approved by the Engineer. Additionally, allowable leakage shall be computed on the basis of AWWA C-600, C-605 where practical.

3. All leaks evident at the surface shall be uncovered and repaired regardless of the total leakage as indicated by the test, and all pipes, valves and fittings and other materials found defective under the test shall be removed and replaced at the Contractor's expense. Tests shall be repeated until leakage has been reduced below the allowable amount.

4. Should, in the judgment of the Engineer, it not be practical to follow the foregoing procedures exactly for any reason, modifications in the procedure shall be made as approved by the Engineer and the City. In any event, the Contractor shall be responsible for the ultimate water tightness of the piping within the preceding requirements

15.07.04 LEAKAGE TESTING FOR NON-PRESSURE PIPING

A. Gravity sanitary sewers need to be tested for leakage.

B. Gravity sanitary sewer leakage testing may include appropriate water or low pressure air testing. The leakage outward or inward (exfiltration or infiltration) shall not exceed 25 gallons per inch of pipe diameter per mile per day for any section of the system. An exfiltration or infiltration test shall be performed with a minimum positive head of two feet. The air test, if used, shall be conducted in accordance with one of the following Standards:

1. ASTM F1417
2. UNI-B-6

C. The testing method selected shall properly consider the existing groundwater elevations during the test.

15.07.05 DEFLECTION TESTING FOR NON-PRESSURE PIPING

D. After completion of the backfill, the engineer or owner may require that a deflection test be performed.

E. Deflection tests should be conducted using a go/no-go mandrel. The mandrel's outside dimension shall be sized to permit no more than 7.5 percent deflection. The percent deflection shall be established from the base inside diameter of the pipe. If the internal beading of the fused joints for the pipe is not required to be removed, the mandrel shall account for this clearance as well. The mandrel shall be approved by the owner or engineer prior to use. Lines that permit safe entry may allow other deflection test options, such as direct measurements.

15.08 DISINFECTION FOR WATER MAIN INSTALLATION

A. The Contractor shall furnish and install suitable temporary connections to the piping, all necessary pressure pumps, hose, pipe connections, meters, gauges and other similar equipment, and all labor required, all without additional compensation for the disinfection of all required potable water piping systems. Disinfection shall be in accordance with the City. If no standards exist, disinfection shall be conducted on the following systems in the following manner:

1. All relocated and new potable water and private fire line piping.

B. Conform to AWWA Standards and as modified herein.

C. Maintain disinfectant for a minimum of 8 hours in such a manner that the entire system will be filled with water containing a minimum chlorine concentration of 50 ppm at any point.

D. After the disinfecting agents have been permitted to remain for the specified contact periods, the water lines, and valves shall be thoroughly flushed with water until the residual chlorine tests are less than 4 PPM in each instance. The determination of the amount of residual chlorine in the system shall be made at such points and in accord with standard tests by means of a standard orthotolodine test set.

E. Replace permanent system devices removed for disinfection.

15.09 BACTERIOLOGICAL SAMPLING FOR WATER MAIN INSTALLATION

A. It shall be the responsibility of the Contractor under this contract to perform the bacteriological testing required by the Florida Department of Environmental Protection and the City to obtain clearance of all piping. The Contractor shall be responsible to disinfect and repeat testing as needed until clearance is obtained for all required systems. The Contractor shall be responsible to pay for additional water needed if the bacteriological testing must be repeated.

B. The piping requires two (2) passing consecutive daily samples taken from the locations called out on the plans or as determined by the Engineer. The samples shall be taken concurrently at all the respective sample point locations.

C. Sampling must be coordinated with Engineer and other construction activities so as to minimize re-sampling.

D. Contractor shall submit schedule for bacteriological testing and pressure tests.

E. The Contractor shall incur all costs needed to provide bacteriological clearance of the piping systems.

F. If repeated tests of such samples show the presence of coliform organisms, the disinfection shall be repeated until tests indicate an absence of contamination.

15.10 QUALITY CONTROL

A. The laboratory and personnel collecting bacteriological samples shall be Florida State certified in accordance with FDEP requirements.

15.11 CONNECTIONS TO EXISTING MAINS

A. The Contractor shall make connections to existing mains as shown on the drawings only after the new mains have passed their pressure and leakage test and completed the disinfection and bacteriological clearance procedures as required.

END OF SECTION

SECTION 16 - SANITARY SEWER BYPASS PUMPING

16.01 SCOPE OF WORK

The Contractor shall furnish all labor, materials, equipment and incidentals required to maintain existing and anticipated flows within the affected portion of the collection system throughout the construction period.

16.02 PUBLIC IMPACTS

The contractor shall not create a public nuisance due to excessive noise or dust, nor impact the public with flooding of adjacent lands, discharge of raw sewage, or release of other potential hazards, nor shall he encroach on or limit access to adjacent lands. No extra charge may be made for increased costs to the contractor due to any of the above.

16.03 SUBMITTALS

The Contractor shall, within 30 days of the date of the Notice to Proceed, submit to the Project Manager a detailed Bypass Pumping Plan for each site by-pass pumping will be needed. The Bypass Pumping Plan shall address all measures and systems to prevent a sanitary sewer overflow (SSO) as defined by the EPA. The Plan shall include as a minimum:

A. Working drawings and sketches showing work location, pump location, piping layout & routing. Show all proposed encroachment and access impacts on adjacent properties or facilities.
B. Pump, control, alarm and pipe specifications or catalog cuts. Detailed sketch of controls and alarm system.
C. Power requirements and details on methods to provide by-pass power or fueling.
D. Calculation and determination of response times to prevent an SSO after a high-water alarm.
E. Procedures to be taken in case of power, pump, or piping failures; including contact names and numbers for emergency notifications.
F. Frequency and specific responsibility for monitoring pump operation, fuel levels, pump maintenance and entire length of piping.

16.04 EQUIPMENT

A. Pumps:

1. By-pass pumping system shall consist of at least a primary pump and a backup pump. Each pump shall have a minimum pumping capacity of 150% of the anticipated peak flows. When bypassing a pump station, 150% of the lift station capacity (G.P.M. & T.D.H) shall be provided.
2. Pumps shall be low noise or sound attenuated. The noise level at any operating condition, in any direction, shall not exceed 70dBA at a distance of twenty-three (23) feet (7 meters) from the pump and/or power source.

B. Controls:

The by-pass pump system shall be equipped with automatic controls and an alarm system. The automatic controls will automatically start the backup pump in the event of a high-water condition or failure of the primary pump. The alarm system will immediately notify the Contractor of a pump failure or high-water condition.

C. Pipe:

Pipe shall be of adequate size and capacity to match the pumps. Pipe type and materials will depend on the particulars of the site conditions and shall be detailed in the Bypass Pumping Plan. Contractor will provide all connections.

16.05 SITE CONDITIONS

Site conditions will vary by site. Contractor is responsible to determine and address requirements such as traffic control, excavation, connections & fittings, impacts on access to adjacent properties, routing and support of by-pass piping, etc., in the Bypass Pumping Plan.

16.06 ON-SITE MONITORING

A. The Contractor shall have personnel experienced with the pumps and controls on site within the calculated response time to prevent an SSO after a high-water alarm.

B. During by-pass operations, the Contractor shall have posted on site with the permit, a copy of the approved Plan and the name and 24-hour contact number of the primary response person, the job site superintendent, and the construction company owner.

16.07 OPERATIONS

A. The Contractor is responsible for securing and providing power, fuel, site security, traffic control and all other supplies, materials and permits required for the by-pass pumping.

B. Contractor shall demonstrate automatic pump switching and alarm system to the satisfaction of the City of St. Pete Beach, prior to beginning by-pass pumping.

Satisfactory demonstration shall be documented by the engineer's, PM's or the City's dated signature on the posted copy of the approved Bypass Pumping Plan.

16.08 DAMAGE RESTORATION & REMEDIATION

A. The Contractor shall be responsible for any pre-pump notifications, all restoration of pre-pump conditions and any damage caused by by-pass operations.

B. Should there be an SSO caused by or as a direct result of the by-pass pumping, the contractor is responsible for all immediate & long term response, notifications, clean up, mitigation, etc. Copies of all written response plans, notifications, documentation, mitigation plans, etc., shall be submitted to the City.

END OF SECTION

THIS PAGE INTENTIONALLY LEFT BLANK

SECTION 17 - VALVES AND APPURTENANCES

17.01 GENERAL

17.01.01 SCOPE OF WORK

The Contractor shall furnish all labor, materials, equipment and incidentals required and install complete and ready for operation all valves and appurtenances as shown on the Contract Drawings and as specified herein.

All valves and appurtenances shall be of the size shown on the Contract Drawings and, to the extent possible, all equipment of the same type on the Project shall be from one manufacturer.

All valves and appurtenances shall have the name of the manufacturer and the working pressure for which they are designed cast in raised letters upon some appropriate part of the body.

All valves shall have a factory applied, fusion bonded epoxy coating on interior and exterior unless noted otherwise in the Contract Drawings or the Specifications.

Any valve, unless otherwise specified, that is removed from the system shall become the property of the Contractor and he shall insure proper disposal.

The equipment shall include, but not be limited to, the following:

1. Gate valves (Sec. 17.03)
2. Pressure Sustaining and Check Valves (Sec. 17.04)
3. Ball Valves for PVC Pipe (Sec. 17.05)
4. Butterfly Valves (Sec. 17.06)
5. Plug Valves (Sec. 17.07)
6. Valve Actuators (Sec. 17.08)
7. Air Release Valves (Sec. 17.09)
8. Valves Boxes (Sec. 17.10)
9. Corporation Cocks (Sec. 17.11)
10. Flange Adapter Couplings (Sec. 17.12)
11. Flexible Couplings (Sec. 17.13)
12. Hose Bibs (Sec. 17.14)
13. Slow Closing Air and Vacuum Valves (Sec. 17.15)
14. Surge Anticipator Valve (Sec. 17.16)
15. Check Valves (Sec. 17.17)
16. Hydrants (Sec. 17.18)
17. Restraining Clamps (Sec. 17.19)
18. Tapping Sleeves and Tapping Valves (Sec. 17.20)
19. Single Acting Altitude Valves (Sec. 17.21)

17.01.02 DESCRIPTION OF SYSTEMS

All of the equipment and materials specified herein are intended to be standard for use in

controlling the flow of potable water, reclaim water, wastewater, etc., depending on the applications.

17.01.03 QUALIFICATIONS

All of the types of valves and appurtenances shall be products of well-established reputable firms who are fully experienced and qualified in the manufacture of the particular equipment to be furnished. The equipment shall be designed, constructed and installed in accordance with the best practices and methods and shall comply with these Specifications as applicable. Valves shall be as covered under mechanical devices in Section 8 of ANSI/NSF Standard 61.

17.01.04 SUBMITTALS

Submittals shall conform to the following:

A. Submit to the City within 30 days after execution of the contract a list of materials to be furnished, the names of the suppliers and the date of delivery of materials to the site.

B. Complete shop drawings of all valves and appurtenances shall be submitted to the City and Engineer for review and acceptance in accordance with the Specifications.

17.02 TOOLS

Special tools, if required for normal operation and maintenance shall be supplied with the equipment.

17.03 GATE VALVES

Gate Valves shall conform to the following:

A. All buried valves shall have cast or ductile iron three (3) piece valve bodies.

B. Where indicated on the Contract Drawings or necessary due to locations, size, or inaccessibility, chain wheel operators shall be furnished with the valves. Such operators shall be designed with adequate strength for the valves with which they are supplied and provide for easy operation of the valve. Chains for valve operators shall be galvanized.

C. Where required, gate valves shall be provided with a box cast in a concrete slab and a box cover. Length of box shall include slab thickness. Box cover opening shall be for valve stem and nut. Valve wrenches and extension stems shall be provided by the manufacturer to actuate the valves. The floor box and cover shall be equal to those manufactured by Rodney Hunt Machine Company, Orange, Massachusetts, Clow, DeZurik or approved equal.

D. Gate valves with 3inch-20inch diameters shall be resilient seated, manufactured to meet or exceed the requirements of AWWA C509 or C515 and UL/FM of latest revision and in accordance with the following specifications. Valves shall have an unobstructed waterway equal to or greater than the full nominal diameter of the valve.

E. Wrench nut shall be provided for operating the valve.

F. Valves shall be suitable for an operating pressure of 200 psi and shall be tested in accordance with AWWA C509 or C515. Mueller, Kennedy, M&H, and Clow are acceptable valves.

G. All bonnet bolts, nuts and studs shall be stainless steel.

17.04 PRESSURE SUSTAINING AND CHECK VALVE

Pressure sustaining and check valves shall conform to the following:

A. Pressure sustaining and check valve shall be pilot operated diaphragm actuated valve with cast iron body, bronze trim, and 125-pound flanged ends. The valve shall be hydraulically operated, diaphragm type globe valve. The main valve shall have a single removable seat and a resilient disc, of rectangular cross section, surrounded on three and a half sides. The stainless-steel stem shall be fully guided at both ends by a bearing in the valve cover, and an integral bearing in the valve seat. It shall be sleeved at both ends with delrin. No external packing glands are permitted and there shall be no pistons operating the main valve or any controls. The valve shall be equipped with isolation cocks to service the pilot system while permitting flow if necessary. Main valve and all pilot controls shall be manufactured in the United States of America. Valve shall be single chamber type, with seat cut to 5 degrees taper.

B. Valve shall maintain a minimum (adjustable) upstream pressure to a preset (adjustable) maximum. The pilot system shall consist of two direct acting, adjustable, spring loaded diaphragm valves.

C. Valve shall be cast iron (ASTM A48) with main valve trim of brass (QQB-B-626) and bronze (ASTM B61). The pilot control valves shall be cast brass (ASTM B62) with 303 stainless steel trim. All ferrous surfaces inside and outside shall have a 2-part epoxy coating. Valve shall be similar in all respects to CLA-VAL Company, Model 692G-01ABKG, as manufactured by CLA-VAL Company, Winter Park, Florida, or similar pressure sustaining and check valve as manufactured by Golden Alderson; or approved equal.

17.05 BALL VALVES FOR PVC PIPE

Ball valves shall conform to the following:

A. Ball valves for PVC pipe shall be of PVC Type 1 with union, socket, threaded or flanged ends as required. Ball valves shall be full port, full flow, all plastic construction, 150 psi rated with Teflon seat seals and T-handles. PVC ball valves shall be as manufactured by Celanese Piping Systems, Inc., Wallace and Tiernan, Inc., Plastiline, Inc., or approved equal.

B. All valves shall be mounted in such a position that valve position indicators are plainly visible when standing on the floor.

17.06 BUTTERFLY VALVES

Butterfly valves shall conform to the following:

A. Butterfly valves shall conform to the AWWA Standard Specifications for Rubber Seated Butterfly Valves, Designated C504, except as hereinafter specified. Valves, except as specified hereinafter, shall be Class 150A or B, except that valves furnished downstream of the high service pumps shall be Class 250 and equal to those manufactured by Henry Pratt Company, DeZurik, Mueller, or approved equal. M&H/Kennedy/Clow are not generally approved equals. Ductile iron conforming to ASTM A536, Grade 65-45-12 shall be provided for all Class 250 valves. All valves shall be leak tested at 200 psi.

B. The face-to-face dimensions of flanged end valves shall be in accordance with Table 1 of above mentioned AWWA Specification for short-body valve. Adequate two-way thrust bearings shall be provided. Flange drilling shall be in accordance with ANSI B16.1.

C. Valve seats shall be an EPDM elastomer. Valve seats 24 inches and larger shall be field adjustable and replaceable without dismounting operator disc or shaft and without removing the valve from the line. All retaining segments and adjusting devices shall be of corrosion resistant material with stainless Nylock screws and be capable of the 1/8-inch adjustment. Valves 20 inches and smaller shall have bonded or mechanically restrained seats as outlined in AWWA C 504. Where the EPDM seat is mounted on the valve body, the mating edge of the valve disc shall be 18-8 stainless steel or Nickel-Chrome, 80-20%. Where the EPDM seat is mounted on the valve disc, the valve body shall be fitted with an 18-8 stainless steel seat offset from the shaft, mechanically restrained and covering 360 degrees of the peripheral opening or seating surface.

D. The valve body shall be constructed of ductile iron or close grain cast iron per ASTM A126, Class B with integrally cast hubs for shaft bearing housings of the through boss-type. Butterfly valves of the "wafer" or "spool" type will not be accepted.

E. The valve shaft shall be turned, ground, and polished constructed of 18-8, ASTM A-276, Type 304 stainless steel and designed for both torsional and shearing stresses when the valve is operated under its greatest dynamic or seating torque. Shaft shall be of either a one-piece unit extending full size through the valve disc and valve bearing or it may be of a stub shaft design. Shaft bearings shall be Teflon or nylon, self-lubricated type.

F. All valves shall be subject to hydrostatic and leakage tests at the point of manufacture. The hydrostatic test for Class 250 valves shall be performed with an internal hydrostatic pressure equal to 500 psi applied to the inside of the valve body of each valve for a period of five minutes. During the hydrostatic test, there shall be no leakage through the metal, the end joints or the valve shaft seal. The leakage test for the Class 250 valves shall be performed at a differential pressure of 230 psi and against both sides of the valve. No adjustment of the valve disc shall be necessary after pressure test for normal operation of valve. The Class 150 valves shall be tested in conformance with AWWA C-504.

G. In general, the butterfly valve operators shall conform to the requirements of Section 3.8 of the AWWA Standard Specifications for Rubber Seated Butterfly Valves, Designation C504, insofar as

applicable, and as herein specified.

H. Gearing for the operators shall be totally enclosed in a gear case in accordance with paragraph 3.8.3 of the above mentioned AWWA Standard Specification.

I. Operators shall be capable of seating and unseating the disc against the full design pressure of velocity, as specified for each class, into a dry system downstream and shall transmit a minimum torque to the valve. Operators shall be rigidly attached to the valve body.

J. The manufacturer shall certify that the required tests on the various materials and on the completed valves have been satisfactory and that the valves conform with all requirements of this Specification and the AWWA standard.

K. Where indicated on the Contract Drawings, extension stems, floor stands, couplings, stem guides, and floor boxes as required shall be furnished and installed.

17.07 PLUG VALVES

Plug valves shall conform to the following:

A. All plug valves shall be eccentric plug valves capable of sustaining 150 psi in either direction without leaking.

Exception: Single direction plug valves may be used if it is clearly demonstrated they will never be required to resist pressure in both directions either in service or during pipe line testing.

B. Plug valves shall be tested in accordance with current AWWA Standard C-504-80 Section 5. Each valve shall be performance tested in accordance with paragraph 5.2 and shall be given a leakage test and hydrostatic test as described in paragraphs 5.3 and 5.4. Plug valves shall be Kennedy or Dezurik.

C. Plug valves shall be of the non-lubricated eccentric type with resilient faced plugs and shall be furnished with end connections as shown on the Contract Drawings. Flanged valves shall be faced and drilled to the ANSI 150 lb. standard. Mechanical joint ends shall be to the AWWA Standard C111-72. Bell ends shall be to the AWWA Standard C100-55 Class B. Screwed ends shall be to the NPT standard.

D. Plug valve bodies shall be of ASTM A126 Class B Semi-steel, 31,000 psi tensile strength minimum in compliance with AWWA Standard C507-73, Section 5.1 and AWWA Standard C504-70 Section 6.4. Port areas for valves 20-inches and smaller shall be full port 100 percent of full pipe area. Valves 24-inch and larger shall have a minimum port area between 80 and 100 percent of full nominal pipe area. All exposed nuts, bolts, springs, washers, etc. shall be zinc or cadmium plated. Resilient plug facings shall be of Hycar or Neoprene.

E. Plug valves shall be furnished with permanently lubricated stainless steel or oil-impregnated bronze upper and lower plug stem bushings. These bearings shall comply with current AWWA Standards.

17.08 VALVE ACTUATORS

17.08.01 GENERAL

A. All valve actuators shall conform to Section 3.8 of the AWWA Standard Specification and shall be either manual or motor operated.

B. Actuators shall be capable of seating and unseating the disc against the full design pressure and velocity, as specified for each class, into a dry system downstream, and shall transmit a minimum torque to the valve. Actuators shall be rigidly attached to the valve body.

C. Butterfly valve actuators shall conform to the requirements of Section 3.8 of the AWWA Standard specifications for Rubber Seated Butterfly Valves, Designated C504, insofar as applicable and as herein specified.

17.08.02 MANUAL ACTUATORS

A. Manual actuators shall have permanently lubricated, totally enclosed gearing with handwheel and gear ratio sized on the basis of actual line pressure and velocities. Actuators shall be equipped with handwheel, position indicator, and mechanical stop-limiting locking devices to prevent over travel of the disc in the open and closed positions. They shall turn counter-clockwise to open valves. Manual actuators shall be of the traveling nut, self-locking type and shall be designed to hold the valve in any intermediate position between fully open and fully closed without creeping or fluttering. Actuators shall be fully enclosed and designed to produce the specified torque with a maximum pull of 80 pounds on the handwheel or chainwheel. Actuator components shall withstand an input of 450 foot pounds for 30-inch and smaller and 300 foot pounds for larger than 30-inch size valves at extreme actuator positions without damage. Valves located above grade shall have handwheel and position indicator, and valves located below grade shall be equipped with a 2-inch square AWWA operating nut located at ground level and cast-iron extension type valve box. Valve actuators shall conform to AWWA C504, latest revision.

17.08.03 MOTOR ACTUATORS (MODULATING)

A. The motor actuated valve controller shall include the motor, actuator unit gearing, limit switch gearing, limit switches, position transmitter which shall transmit a 4-20 mA DC signal, control power transformer, electronic controller which will position the valve based on a remote 4-20 milliamp signal, torque switches, bored and key-wayed drive sleeve for non-rising stem valves, declutch lever and auxiliary handwheel as a self-contained unit.

B. The motor shall be specifically designed for valve actuator service using 480-volt, 60 Hertz, three phase power as shown, on the electrical drawings. The motor shall be sized to provide an output torque and shall be the totally enclosed, non-ventilated type. The power gearing shall consist of helical gears fabricated from heat treated alloy steel forming the first stage of reduction. The second reduction stage shall be a single stage worm gear. The worm shall be of alloy steel with carburized threads hardened and ground for high

efficiency. The worm gear shall be of high tensile strength bronze with hobbed teeth. All power gearing shall be grease lubricated. Ball or roller bearings shall be used throughout. Preference will be given to units having a minimum number of gears and moving parts. Spur gear reduction shall be provided as required.

C. Limit switches and gearing shall be an integral part of the valve control. The limit switch gearing shall be made of bronze and shall be grease lubricated, intermittent type and totally enclosed to prevent dirt and foreign matter from entering the gear train. Limit switches shall be of the adjustable type capable of being adjusted to trip at any point between fully opened valve and fully closed valve.

D. The speed of the actuator shall be the responsibility of the system supplier with regard to hydraulic requirements and response compatibility with other components within the control loop. Each valve controller shall be provided with a minimum of two rotor type gear limit switches, one for opening and one for closing. The rotor type gear limit switch shall have two normally open and two normally closed contacts per rotor. Gear limit switches must be geared to the driving mechanism and in step at all times whether in motor or manual operation. Provision shall be made for two additional rotors as described above, each to have two normally open and two normally closed contacts. Each valve controller shall be equipped with a double torque switch. The torque switch shall be adjustable and will be responsive to load encountered in either direction of travel. It shall operate during the complete cycle without auxiliary relays or devices to protect the valve, should excessive load be met by obstructions in either direction of travel. The torque switch shall be provided with double-pole contacts.

E. A permanently mounted handwheel shall be provided for manual operation. The handwheel shall not rotate during electric operations but must be responsive to manual operation at all times except when being electrically operated. The motor shall not rotate during hand operation nor shall a fused motor prevent manual operation. When in manual operating position, the unit will remain in this position until motor is energized at which time the valve operator will automatically return to electric operation and shall remain in motor position until handwheel operation is desired. This movement from motor operation to handwheel operation shall be accomplished by a positive declutching lever which will disengage the motor and motor gearing mechanically, but not electrically. Hand operation must be reasonably fast. It shall be impossible to place the unit in manual operation when the motor is running. The gear limit switches and torque switches shall be housed in a single easily accessible compartment integral with the power compartment of the valve control. All wiring shall be accessible through this compartment. Stepping motor drives will not be acceptable.

F. The motor with its control module must be capable of continuously modulating over its entire range without interruption by heat protection devices. The system, including the operator and control module must be able to function, without override protection of any kind, down to zero dead zone.

G. All units shall have strip heaters in both the motor and limit switch compartments.

H. The actuator shall be equipped with open-stop-close push buttons, an auto-manual selector switch, and indicating lights, all mounted on the actuator or on a separate locally mounted power control station.

I. The electronics for the electric operator shall be protected against temporary submergence.

J. Actuators shall be Limitorque L120 with Modutronic Control System containing a position transmitter with a 4-20MA output signal or equal.

17.08.04 MOTOR ACTUATORS (OPEN-CLOSE)

A. The electronic motor-driven valve actuator shall include the motor, actuator gearing, limit switch gearing, limit switches, torque switches, fully machined drive sleeve, declutch lever, and auxiliary handwheel as a self-contained unit.

B. The motor shall be specifically designed for valve actuator service and shall be of high torque totally enclosed, nonventilated construction, with motor leads brought into the limit switch compartment without having external piping or conduit box.

a) The motor shall be of sufficient size to open or close the valve against maximum differential pressure when voltage to motor terminals is 10% above or below nominal voltage.
b) The motor shall be prelubricated and all bearings shall be of the anti-friction type.

C. The power gearing shall consist of helical gears fabricated from heat treated steel and worm gearing. The worm shall be carburized and hardened alloy steel with the threads ground after heat treating. The worm gear shall be of alloy bronze accurately cut with a hobbing machine. All power gearing shall be grease lubricated. Ball or roller bearings shall be used throughout.

D. Limit switches and gearing shall be an integral part of the valve actuator. The switches shall be of the adjustable rotor type capable of being adjusted to trip at any point between fully opened valve and fully closed valve. Each valve controller shall be provided with a minimum of two rotor type gear limit switches, one for opening and one for closing (influent valves require additional contacts to allow stopping at an intermediate position). The rotor type gear limit switch shall have two normally open and two normally closed contacts per toro. Additional switches shall be provided if shown on the control and/or instrumentation diagrams. Limit switches shall be geared to the driving mechanism and in step at all times whether in motor or manual operation. Each valve actuator shall be equipped with a double torque switch. The torque switch shall be adjustable and will be responsive to load encountered in either direction of travel. It shall operate during the complete cycle without auxiliary relays or devices to protect the valve should excessive load be met by obstructions in either direction of travel. Travel and thrusts shall be independent of wear in valve disc or seat rings.

E. A permanently mounted handwheel shall be provided for manual operation. The

handwheel shall not rotate during electric operation except when being electrically operated. The motor shall not rotate during hand operation, nor shall a fused motor prevent manual operation. When in manual operating position, the unit will remain in this position until motor is energized at which time the valve actuator will automatically return to electric operation and shall remain in motor position until handwheel operation is desired. Movement from motor operation to handwheel operation shall be accomplished by a positive declutching lever which will disengage the motor and motor gearing mechanically, but not electrically. Hand operation must be reasonably fast. It shall be impossible to place the unit in manual operation when the motor is running.

F. Valve actuators shall be equipped with an integral reversing controller and three phase overload relays, Open-Stop-Close push buttons, local-remote-manual selector switch, control circuit transformer, three-phase thermal overload relays and two pilot lights in a NEMA 4X enclosure. In addition to the above, a close coupled air circuit breaker or disconnect switch shall be mounted and wired to the valve input power terminals for the purpose of disconnecting all underground phase conductors.

G. The valve actuator shall be capable of being controlled locally or remotely via a selector switch integral with the actuator. In addition, an auxiliary dry contact shall be provided for remote position feedback.

H. Valve A.C. motors shall be designed for operation on a 480 volt, 3-phase service. Valve control circuit shall operate from a fuse protected 120-volt power supply.

I. Motor operators shall be as manufactured by Limitorque Corporation, Type L120 or approved equal.

17.09 AIR RELEASE VALVES

The air release valves for use in water or force mains shall be installed as shown on the Contract Drawings. The valves shall have a 316 stainless steel body and cover, 316 stainless steel float, plug, seat ring, and internal mechanism, bronze water diffuser, Buna-N or Viton seat, and 316 stainless steel trim and hardware. The fittings shall be threaded. Back flushing attachments shall be included. The air release valves shall be Figure 942 or 942F as manufactured by VAG/GA Industries or approved equal.

17.10 VALVE BOXES

Valve Boxes shall conform to the following:

A. Buried valves shall have cast-iron three-piece valve boxes or HDPE adjustable valve boxes. Cast iron valve boxes shall be provided with suitable heavy bonnets and shall extend to such elevation at or slightly above the finished grade surface as directed by the City. The barrel shall be two-piece, screw type, having a 5 1/4-inch shaft. The upper section shall have a flange at the bottom with sufficient bearing area to prevent settling and shall be complete with cast iron covers. Covers shall have WATER, SEWER, or RECLAIM, as applicable, cast into the top. Lids will be painted “safety” blue for potable, purple for reclaimed, and green for sanitary sewer.

B. All valves shall have actuating nuts extended to within four (4) feet of the top of the valve box. All valve extensions will have a centering guide plate two (2) inches maximum below the actuating nut. The valve extension shall be fastened to the existing nut with a set screw. Valve boxes shall be provided with a concrete base and a valve nameplate engraved with lettering 1/8-inch deep as shown on the Contract Drawings.

C. HDPE adjustable valve boxes shall be one complete assembled unit composed of the valve box and extension stem. All moving parts of the extension stem shall be enclosed in a housing to prevent contact with the soil. Valve box assembly shall be adjustable to accommodate variable trench depths.

D. The entire assembly shall be made of heavy wall high density polyethylene. All exterior components shall be joined with stainless steel screws. The valve box top section shall be adaptable to fit inside a valve box upper section.

E. The stem assembly shall be of a telescoping design that allows for variable adjustment length. The stem material shall be of plated steel square tubing. The stem assembly shall have a built-in device that keeps the stem assembly from disengaging at its fully extended length. The extension stem must be torque tested to 1000 foot pounds. Covers shall have WATER, SEWER or RECLAIMED clearly and permanently impressed into the top surface.

17.11 CORPORATION COCKS

Corporation cocks for connections to cast-iron, ductile iron or steel piping shall be all brass or bronze suitable for 180 psi operating pressure and similar to Mueller Co. H-10046 or approved equal by Clow Corp. and shall be of sizes required and/or noted on the Contract Drawings.

17.12 FLANGE ADAPTER COUPLINGS

Flange adapter couplings shall be of the size and pressure rating required for each installation and shall be suitable for use on either cast iron or ductile iron pipe. They shall be similar or approved equal to Dresser Company, Style 128. All couplings shall have a sufficient number of factory installed anchor studs to meet or exceed a minimum test pressure rating of 230 psi minimum.

17.13 FLEXIBLE COUPLINGS

A. Flexible couplings shall be either the split type or the sleeve type as shown on the Contract Drawings.

B. Split type coupling shall be used with all interior piping and with exterior piping noted on the Contract Drawings. The couplings shall be mechanical type for radius groove piping. The couplings shall mechanically engage and lock grooved pipe ends in a positive couple and allow for angular deflection and contracting and expansion.

C. Couplings shall consist of malleable iron, ASTM Specification A47, Grade 32510 housing clamps in two or more parts, a single chlorinated butyl composition sealing gasket with a "C" shaped cross-section and internal sealing lips projecting diagonally inward, and two or more oval track head type

bolts with hexagonal heavy nuts conforming to ASTM Specification A 183 and A194 to assemble the housing clamps. Bolts and nuts shall be hot dipped galvanized after fabrication.

D. Victualic type couplings and fittings may be used in lieu of flanged joints. Pipes shall be radius grooved as specified for use with the Victaulic couplings. Flanged adapter connections at fittings, valves, and equipment shall be Victaulic Vic Flange Style 741, equal by Gustin-Bacon Group, Division of Certain-Teed Products, Kansas City, Kansas, or approved equal.

E. Sleeve type couplings shall be used with all buried piping. The couplings shall be of steel and shall be Dresser Style 38 or 40, as shown on the Contract Drawings, or equal. The coupling shall be provided with hot dipped galvanized steel bolts and nuts unless indicated otherwise.

F. All couplings shall be furnished with the pipe stop removed.

G. Couplings shall be provided with gaskets of a composition suitable for exposure to the liquid within the pipe.

H. If the Contractor decides to use victaulic couplings in lieu of flanged joints, he shall be responsible for supplying supports for the joints.

17.14 HOSE BIBS

Hose bibs shall be 3/4-inch or 1-inch brass, polished chromium plated brass, with vacuum breaker as noted on the Contract Drawings.

17.15 SLOW CLOSING AIR AND VACUUM VALVES

A. The Contractor shall furnish and install slow closing air and vacuum valves as shown on the Contract Drawings which shall have two (2) independent valves bolted together. The air and vacuum valve shall have all stainless-steel float, guided on both ends with stainless shafts. The air and vacuum valve seat shall be Buna-N to insure drop tight closure. The Buna-N seat shall be fastened to the cover stainless shoulder screws in a manner to prevent distortion of the seat. The float shall be guided at both ends with stainless steel bushings.

B. The valve cover shall have a male lip designed to fit into the body register for accurate alignment of the float into the Buna-N seat. The valve cover shall have 250-pound class flanged outlet connection.

C. The surge check valve shall be bolted to the inlet of the air and vacuum valve and consist of a body, seat, disc, and compression spring. A surge check unit shall operate on the interphase between the kinetic energy and relative velocity flows of air and water, so that after air passes through, and water rushes into the surge check, the disc starts to close, reducing the rate of flow of water into the air valve by means of throttling orifices in the disc to prevent water hammer in the air valves. The surge check orifices must be adjustable type for regulation in the field to suit operating conditions. Valve shall be rated for 250-pound class working pressure.

D. The complete slow closing air and vacuum valve with air release valve shall have been flow tested in the field, substantiated with test data to show reduction of surge pressure in the valve. Flow test data

shall be submitted with initial shop drawings for review and acceptance.

E. Valve exterior to be painted Red Oxide, Phenolic TT-P86, Primer or approved equal for high resistance to corrosion.

F. All materials of construction shall be certified in writing to conform to ASTM specifications as follows:

Air Valve Cover, Body, and Surge Check Body	Cast Iron	ASTM A48, Class 30
Float	Stainless Steel	ASTM A240
Surge Check Seat and Disc	Stainless Steel	ASTM A582
Air Valve Seat Spring	Buna-N Stainless Steel	T302

17.16 SURGE ANTICIPATOR VALVES

A. Surge anticipator valves shall be furnished for the pumping systems as shown on the Contract Drawings. The valve shall be hydraulically operated, pilot controlled, and diaphragm or piston actuated. The main valve shall be cast iron conforming to ASTM A48 with bronze trim conforming to ASTM B61 and flanged ends conforming to ANSI B161.1. The main valve shall be globe type with a single removable seat and a resilient disc.

B. The diaphragm actuated valve shall have a stainless-steel stem guided at both ends by a bearing in the valve cover and an integral bearing surface in the seat. No external packing glands shall be permitted. The valve shall be fully serviceable without removing it from the line. The pilot system shall be of noncorrosive construction and provided with isolation cocks.

C. The piston actuated valve shall operate on the differential piston principle. The valve piston shall be guided on its outside diameter. The valve shall be able to operate in any position and shall be fully serviceable without removing it from the line. The pilot system shall be provided with isolation cocks and be of noncorrosive materials of construction.

D. The valve shall be designed specifically to minimize the effects of water hammer, resulting from power failure at the pumping station, or from normal stopping and starting of pumping operators. The valve shall open hydraulically on a down surge, or low-pressure wave created when the pump stops, remain open during the low-pressure cycle in order to be open when the high-pressure wave returns. The high-pressure pilot shall be adjustable over a 20 to 200 psi range and the low-pressure pilot shall be adjustable over a 15 to 75 psi range. The valve shall be the 250 Class.

17.17 CHECK VALVES

A. Check valves for cast iron and ductile iron pipe lines shall be swing type and shall meet the material requirements of AWWA Specification C508. The valves shall be iron body, bronze mounted, single disc, 175 psi working water pressure and nonshock. Valves shall be as manufactured by Mueller, Clow, Kennedy, or M&H. Valves 8-inch and larger shall be air cushioned to reduce valve slam.

B. When there is no flow through the line, the disc shall hang lightly against its seat in practically a vertical position. When open, the disc shall swing clear of the waterway.

C. Check valves shall have bronze seat and body rings, extended bronze hinge pins and bronze nuts on the bolts of bolted covers. The interior and exterior of the valve body shall have a factory applied fusion bonded or 10 mil 2-part epoxy coating (Protecto 401 or approved equal).

D. Valves shall be so constructed that disc and body seat may easily be removed and replaced without removing the valve from the line. Valves shall be fitted with an extended hinge arm with outside lever and weight. Weights provided and approved by the City shall be installed.

17.18 HYDRANTS

Hydrants shall be AVK Series 2780 Barrel (nostalgic style with stainless steel bolts) American Darling B-84-B or Mueller Super Centurian 250, or approved equal and shall conform to the "Standard Specification for Fire Hydrants for Ordinary Water Works Service", AWWA C502, and UL/FM certified, and shall in addition meet the specific requirements and exceptions which follow:

1. Hydrants shall be according to manufacturer's standard pattern and of standard size and shall have one 4-1/2inch steamer nozzle and two 2-1/2 inch hose nozzles.
2. Hydrant inlet connections shall have mechanical joints for 6 inch ductile-iron pipe.
3. Hydrant valve opening shall have an area at least equal to that area of a 5-1/4 inch minimum diameter circle and be obstructed only by the valve rod. Each hydrant shall be able to deliver 500 gallons minimum through its two 2-1/2 inch hose nozzles when opened together with a loss of not more than 2 psi in the hydrants.
4. Each hydrant shall be designed for installation in a trench that will provide 5-ft. cover.
5. Hydrants shall be hydrostatically tested as specified in AWWA C502.
6. Hydrants shall be rated at 200 psi.
7. All nozzle threads shall be American National Standard.
8. Each nozzle cap shall be provided with a Buna N rubber washer.
9. Hydrants shall be so arranged that the direction of outlets may be turned 90 degrees without interference with the drip mechanism and without the mechanism obstructing the discharge from any outlet.
10. Hydrants must be capable of being extended without removing any operating parts.
11. Hydrants shall have bronze-to-bronze seatings as per AWWA C502-85.
12. Hydrant main valve closure shall be of the compression type opening against the pressure and closing with the pressure. The resilient seat material shall meet the requirements of AWWA C-509 and shall preferably be EPDM Elastomer.
13. Internal and below ground iron parts (bonnet, nozzle section and base) shall have a fusion bonded epoxy coating per AWWA C550. Aboveground external hydrant parts (cap, bonnet and nozzle section) shall be either epoxy coated together with a UV resistant polyester coating or have two shop coats of paint per AWWA C502. The lower stand pipe or barrel shall be protected with asphaltic coatings per AWWA C502.
14. Exterior nuts, bolts and washer shall be stainless steel. Bronze nuts may be used below grade.
15. All internal operating parts shall be removable without requiring excavation.

17.19 RESTRAINING CLAMPS

Restraining clamp assemblies as detailed in the Contract Drawings for use at hydrant connections to water mains, or at fittings where shown on the Contract Drawings, shall be as manufactured by American

Cast Iron Pipe, Star Pipe Products, U.S. Pipe; or approved equal.

17.20 TAPPING SLEEVES AND GATE VALVES

Tapping valves shall meet the requirement of AWWA C500. The valves shall be flanged, shall be mechanical joint outlet with non-rising stem, designed for vertical burial and shall open left or counterclockwise. Stuffing boxes shall be the "O-ring" type. Operating nut shall be AWWA Standard 2-inch square for valves 2-inch and up. The valves shall be provided with an overload seat to permit the use of full size cutters. Gaskets shall cover the entire area of flange surfaces and shall be supplied with EPDM wedges up to 30-inch diameter.

Tapping sleeves and saddles shall seal to the pipe by the use of a confined "O" ring gasket and shall be able to withstand a pressure test of 180 psi for one hour with no leakage in accordance with AWWA C110, latest edition. A stainless steel 3/4-inch NPT test plug shall be provided for pressure testing. All bolts joining the two halves shall be stainless steel and shall be included with the sleeve or saddle. Sleeves and saddles shall be protected from corrosion by being fusion applied epoxy coated or be made of 18-8 Type 304 stainless steel. Saddle straps shall be 18-8 Type 304 stainless steel.

17.21 SINGLE ACTING ALTITUDE VALVES

17.21.01 FUNCTION

A. The altitude control valve shall be of the single acting type, closing off tightly when the water reaches the maximum predetermined level in the tank to prevent overflow; and opening to permit replenishing of the tank supply when the water level drops approximately 6-inch to 12-inch below the maximum level.

B. A hand operated valve in the power water line to the top of the piston shall permit adjustment of the speed of valve closing. The tank water level control shall be by means of a diaphragm operated, spring loaded, three-way pilot which directs power water to or from the top of the main valve piston. The three-way pilot shall be of bronze construction. The diaphragm surface exposed to the tank head shall be not less than 57 sq. inches. It shall be possible to adjust the spring above the diaphragm for water level control approximately 20% above or below the factory setting.

17.21.02 DESCRIPTION

A. The main valve shall operate on the differential piston principle such that the area on the underside of the piston is no less than the pipe area on the upper surface of the piston is of a greater area than the underside of the piston.

B. The valve piston shall be guided on its outside diameter by long stroke stationary Vee ports which shall be downstream of the seating surface to minimize the consequences of throttling. Throttling shall be done by the valve Vee ports and not the valve seating surfaces.

C. The valve shall be capable of operating in any position and shall incorporate only one flanged cover at the valve top from which all internal parts shall be accessible. There shall be no

stems, stem guides, or spokes within the waterway. There shall be no springs to assist the valve operation.

17.21.03 CONSTRUCTION

A. The valve body shall be of cast iron ASTM A-126 with flanges conforming to the latest ANSI Standards. The valve shall be extra heavy construction throughout. The valve interior trim shall be bronze B-62 as well as the main valve operation.

B. The valve seals shall be easily renewable while no diaphragm shall be permitted within the main valve body.

C. All controls and piping shall be of non-corrosive construction.

D. A visual valve position indicator shall be provided for observing the valve piston position at any time.

17.21.04 FIGURE NUMBER

The valves shall be the 20-inch Globe type (Fig. 3200-D) as manufactured by GA Industries of Mars, Pennsylvania, or approved equal.

17.22 INSTALLATION

A. All valves and appurtenances shall be installed in the location shown, true to alignment and rigidly supported. Any damage occurring to the above items before they are installed shall be repaired to the satisfaction of the City.

B. After installation, all valves and appurtenances shall be tested at least two hours at the working pressure corresponding to the class of pipe, unless a different test pressure is specified. If any joint proves to be defective, it shall be repaired to the satisfaction of the City.

C. Install all floor boxes, brackets, extension rods, guides, the various types of operators and appurtenances as shown on the Contract Drawings that are in masonry floors or walls, and install concrete inserts for hangers and supports as soon as forms are erected and before concrete is poured. Before setting these items, the Contractor shall check all Contract Documents which have a direct bearing on their location and he shall be responsible for the proper location of these valves and appurtenances during the construction of the structures.

D. Pipe for use with flexible couplings shall have plain ends as specified in the respective pipe sections.

E. Flanged joints shall be made with high strength, low alloy Corten bolts, nuts and washers. Mechanical joints shall be made with mild corrosion resistant alloy steel bolts and nuts. All exposed bolts shall be painted the same color as the pipe. All buried bolts and nuts shall be heavily coated with two (2) coats of bituminous paint comparable to Inertol No. 66 Special Heavy.

F. Prior to assembly of split couplings, the grooves as well as other parts shall be thoroughly cleaned.

The ends of the pipes and outside of the gaskets shall be moderately coated with petroleum jelly, cup grease, soft soap or graphite paste, and the gasket shall be slipped over one pipe end. After the other pipe has been brought to the correct position, the gasket shall be centered properly over the pipe ends with the lips against the pipes. The housing sections then shall be placed. After the bolts have been inserted, the nuts shall be tightened until the housing sections are firmly in contact, metal-to-metal, without excessive bolt tension.

G. Prior to the installation of sleeve-type couplings, the pipe ends shall be cleaned thoroughly for a distance of 8-inch. Soapy water may be used as a gasket lubricant. A follower and gasket, in that order, shall be slipped over each pipe to a distance of 6-inches from the end.

H. Valve boxes with concrete bases shall be installed as shown on the Contract Drawings. Mechanical joints shall be made in the standard manner. Valve stems shall be vertical in all cases. Place cast iron box over each stem with base bearing on compacted fill and the top flush with final grade. Boxes shall have sufficient bracing to maintain alignment during backfilling. Knobs on cover shall be parallel to pipe. Remove any sand or undesirable fill from valve box.

17.23 HYDRANT INSTALLATION

A. Hydrants shall be set at the locations designated by the City and/or as shown on the Contract Drawings and shall be bedded on a firm foundation. A drainage pit on crushed stone as shown on the Contract Drawings shall be filled with gravel or crushed stone and satisfactorily compacted. During backfilling, additional gravel or crushed stone shall be brought up around and 6-inch over the drain port. Each hydrant shall be set in true vertical alignment and shall be properly braced. Concrete thrust blocks shall be placed between the back of the hydrant inlet and undisturbed soil at the end of the trench. Minimum bearing area shall be as shown on the Contract Drawings. Felt paper shall be placed around the hydrant elbow prior to placing concrete. CARE MUST BE TAKEN TO ENSURE THAT CONCRETE DOES NOT PLUG THE DRAIN PORTS. Concrete used for backing shall be as specified herein.

B. When installations are made under pressure, the flow of water through the existing main shall be maintained at all times. The diameter of the tap shall be a minimum of 2-inch less than the inside diameter of the branch line.

C. The entire operation shall be conducted by workmen thoroughly experienced in the installation of tapping sleeves and valves, and under the supervision of qualified personnel furnished by the manufacturer. The tapping machine shall be furnished by the Contractor if tap is larger than 12-inch in diameter.

D. The Contractor shall determine the locations of the existing main to be tapped to confirm the fact that the proposed position for the tapping sleeve will be satisfactory and no interference will be encountered such as the occurrence of existing utilities or of a joint or fitting at the location proposed for the connection. No tap will be made closer than 30-inch from a pipe joint.

E. Tapping valves shall be set in vertical position and be supplied with a 2-inch square operating nut for valves 2-inch and larger. The valve shall be provided with an oversized seat to permit the use of full sized cutters.

F. Tapping sleeves and valves with boxes shall be set vertically or horizontally as indicated on the Contract Drawings and shall be squarely centered on the main to be tapped. Adequate support shall be provided under the sleeve and valve during the tapping operation. Sleeves shall be no closer than 30-inch from water main joints. Thrust blocks shall be provided behind all tapping sleeves. Proper tamping of supporting earth around and under the valve and sleeve is mandatory. After completing the tap, the valve shall be flushed to ensure that the valve seat is clean.

17.24 SHOP PAINTING

Ferrous surfaces of valves and appurtenances shall receive a coating of rust-inhibitive primer. All pipe connection openings shall be capped to prevent the entry of foreign matter prior to installation.

17.25 FIELD PAINTING

All metal valves and appurtenances specified herein and exposed to view shall be painted according to the Specifications. All above ground potable water main valves shall be painted safety blue.

17.26 INSPECTION AND TESTING

Completed pipe shall be subjected to hydrostatic pressure test for two hours at 180 psi. All leaks shall be repaired and lines retested as approved by the City. Prior to testing, the pipelines shall be supported in an approved manner to prevent movement during tests.

END OF SECTION

THIS PAGE INTENTIONALLY LEFT BLANK

SECTION 18 - SANITARY SEWER CONSTRUCTION

18.01 GENERAL

The Work in this section includes construction of sanitary sewer gravity pipes, force mains, manholes, and appurtenances.

Sanitary Sewers are to be constructed at locations indicated on the Contract Drawings. The City reserves the right, however, to make minor changes in grade and/or alignment as the Work progresses.

All Work shall be fully completed within the established limits as outlined for the various Pay Items listed in the Proposal. It is not the intent of the City to allow additional compensation for obstructions, interferences, or similar contingencies on this Project.

Pipe materials used for gravity sewers shall be subject to the depth limitations indicated in accordance with the Contract Documents.

All force main pipe and fittings shall be furnished and installed in accordance with the applicable requirements of the Technical Specifications sections headed “Piping Materials: Ductile Iron Pipe,” “Piping Materials: PVC Pressure Pipe,” and "Pressure Pipe Construction."

At the ends of the sections where adjoining pipelines have not been completed and are not ready to connect, temporary bulkheads or plugs (as specified herein) approved by the Engineer shall be installed. All such bulkheads or plugs shall be removed when they are no longer needed or when ordered by the Engineer.

All pipelines shall be tested and closed-circuit television video (CCTV) inspected. Any leak or defect shall be repaired and re-televised. Tests shall be conducted in accordance with these Specifications.

PVC pipe for gravity sewers shall be tested for allowable deflection. Tests shall be conducted in accordance with the requirements of these Specifications.

Connections between dissimilar gravity pipe materials or diameters shall be made as specified herein.

Connections between pressure pipes shall be made with solid sleeves as specified herein.

The ends of all new sanitary laterals shall be marked by witness posts or protruding galvanized pipe, as directed by the Engineer. Witness posts shall be 4-inch diameter PVC pipe filled with concrete; 4 to 5 feet of the pipe shall be exposed and wrapped with green tape. The 1-inch diameter galvanized pipe shall protrude 1 inch above grade.

The following Standards are referenced in this section:

ASTM C 12	“Practice for Installing Vitrified Clay Pipe Lines”
ASTM C 76	"Standard Specification for Reinforced Concrete Culvert, Storm Drain, and

	Sewer Pipe"
ASTM C 443	"Standard Specification for Joints for Circular Concrete Sewer and Culvert Pipe, Using Rubber Gaskets"
ASTM C 478	"Standard Specification for Precast Reinforced Concrete Manhole Sections"
ASTM C 1107	"Standard Specification for Packaged Dry, Hydraulic-Cement Grout (NonShrink)"
ASTM D 2321	"Standard Practice for Underground Installation of Thermoplastic Pipe for Sewers and Other Gravity-Flow Applications"
ASTM D 3034	"Standard Specification for Type PSM Poly (Vinyl Chloride) (PVC) Sewer Pipe and Fittings"
ASTM D 3753	"Standard Specification for Glass-Fiber-Reinforced Polyester Manholes"
ASTM F 477	"Standard Specification for Elastomeric Seals (Gaskets) for Joining Plastic Pipe"
ASTM F 679	"Standard Specification for Poly (Vinyl Chloride) (PVC) Large-Diameter Plastic Gravity Sewer Pipe and Fittings"
UNI-B-6-98	"Recommended Practice for Low-Pressure Air Testing of Installed Sewer Pipe" Uni-Bell Plastic Pipe Association, Dallas, Texas

18.02 DATA TO BE SUBMITTED

The Contractor shall submit shop drawings in accordance with the General Conditions, Article 36, for the following materials:

Piping materials
Fittings and couplings
Grouting rings
Pipe-to-manhole connectors
Precast manholes
Fiberglass manholes
Castings
Wall sleeves
Special construction methods
Interior cementitious coating (including applicator's certification from manufacturer)

18.03 MATERIALS

All materials shall be furnished by the Contractor, unless otherwise noted on the Contract Drawings. All materials shall be new and of the best quality available. Materials not specifically specified shall confirm to applicable provisions of the FDOT-SSRBC.

18.03.01 Piping Materials

Sanitary sewer pipe shall either be green in color or shall be white with continuous colored green ink lettering or shall be continuously painted green along the top 1/3 of the pipe with 2-part high-build epoxy-polyamide paint. All sanitary sewers shall be installed accompanied by green-colored metallic identification tape laid 1 foot above the pipe, cut every 10 feet.

A. Ductile iron pipe and fittings for force mains or gravity sewers shall conform to the Technical Specifications section headed "Piping Materials: Ductile Iron Pipe."

B. PVC gravity sewer pipe and fittings 4-inch through 15-inch, intended for non-pressure service, shall comply with ASTM D 3034, Type PSM, with a dimension ratio of 35 and a minimum stiffness of 46 psi; or, at the direction of the Engineer, pipe with a dimension ratio of 26 and a minimum pipe stiffness of 115 psi shall be used. Joints and gaskets shall comply with ASTM F 477. PVC fittings for use on 4-inch through 15-inch PVC pipe shall be Harco Gasketed PVC Sewer Fittings as manufactured by Harrington Corp. or approved equal.

   PVC gravity sewer pipe and fittings 18-inch through 27-inch, intended for non-pressure service, shall comply with ASTM F 679, with T-1 wall thickness and a minimum pipe stiffness of 46 psi. Joints and gaskets shall comply with ASTM F 477.

C. PVC pressure pipe and fittings for force mains or gravity sewers shall conform to the Technical Specifications section headed "Piping Materials: PVC Pressure Pipe." Fittings shall be PVC or ductile iron as specified, as directed by the Engineer.

D. High Density Polyethylene (HDPE) pressure pipe for force mains shall conform to the Technical Specifications section headed “Piping Materials: HDPE Pressure Pipe.”

18.03.02 Other Materials

A. Castings for manholes and cleanouts shall be cast iron of the sizes, shapes, and catalog references shown on the Contract Drawings. Where no reference is made on the Contract Drawings, castings shall be equivalent in quality to those manufactured by U.S. Foundry. Unless otherwise noted, all castings shall be designed for an HS-20 truck loading. Castings shall be marked "Sanitary Sewer."

B. Concrete, reinforcing, and masonry for precast, cast-in-place, or site assembled manholes and structures shall conform to the Technical Specifications section headed "Concrete, Masonry, and Reinforcing Steel."

C. Precast manholes shall be manufactured as specified herein and in accordance with the sizes and details shown on the Contract Drawings, and with the approved shop drawings.

D. Fiberglass Reinforced Polyester (FRP) manholes shall be manufactured in accordance with ASTM D 3753, the sizes and details shown on the Contract Drawings, and the approved shop drawings.

18.04 CONNECTIONS TO EXISTING SANITARY SEWERS

The Contractor shall connect new sanitary sewers to existing sanitary sewers as shown on the Contract Drawings and as specified.

All connections to existing sanitary sewers shall be by Flex-Seal Adjustable Repair Coupling Series MR-ARC with Series 316 stainless steel shear rings as manufactured by Mission Rubber Company

or approved equal. All couplings shall be centered between pipe ends and shall be tightened at both ends by Series 316 stainless steel clamps or approved equal.

The Engineer shall be notified at least 2 working days prior to making final connections. The time at which the connections are to be made shall be subject to acceptance by the Engineer.

18.05 CONSTRUCTION OPERATIONS

Pipes shall be laid in open cut, except when another method, such as jacking, augering, directional drilling, or tunneling, is shown on the Contract Drawings, specified, or ordered. Construction shall adhere to the following:

A. No excavations shall be left open over a weekend. All pavement openings shall be completely repaired within 7 days of opening.

B. Sanitary sewers may be constructed in short tunnels to protect trees, shrubs, and existing surface or subsurface utilities and structures. Short tunnels shall be constructed to the lengths shown on the Contract Drawings, specified, or directed by the Engineer. No separate payment will be made for short tunnels.

C. Temporary fences, where required, shall be "wood and wire fence" or other suitable fencing as approved by the Engineer.

D. During the Work, it will be necessary to install the sanitary sewer under or closely adjacent to existing culverts and other storm and water main facilities. Where so indicated on the Contract Drawings, the Contractor shall remove storm drains to permit construction of the sanitary sewer and shall then reconstruct the storm drain. Where removal and reconstruction are not indicated on the Contract Drawings, the Contractor shall protect all existing storm and water main facilities which are shown on the Contract Drawings or located in the field during the Work.

E. Sewers crossing water mains may be required to be constructed of ductile iron pipe, PVC pressure pipe, or heavy wall PVC pipe (SDR 26) as ordered by the Engineer, to conform to DEP and Pinellas County Public Health Unit requirements.

   Sanitary sewers and service laterals which cross under the new water pipe with less than 18 inches clear vertical separation, or which cross over the new water pipe, shall be replaced with ductile iron pipe or PVC pressure pipe, or heavy wall PVC pipe (SDR 26) for 10 feet on both sides of the new water main, or as directed by the Engineer.

F. All ground surfaces disturbed by the Contractor shall be restored to their original condition in conformance to the Technical Specifications section headed "Surface Restoration."

G. Sanitary sewers shall not be cut or pumped around without an approved sanitary sewer pump-around plan and submittal of same, a minimum of 72 hours prior to implementation, to the Water Resources Department Dispatch, 893-7261. The pump-around plan shall include size of pipes and pumps, and discharge location.

H. It is the responsibility of the Contractor to maintain operation of the existing sewerage facilities during construction and repair work. The Contractor shall be responsible for providing any equipment required to maintain operation of service during construction. Any damage done to any existing sewer pipe or structure is to be immediately repaired to a condition equal to, or better than, its original condition.

I. Cutting ductile iron pipe shall be field cut with a power saw. No impact cutting is permitted. The spigot end of pipe thus cut shall be filed or ground to form a bevel.

J. Cutting PVC sewer pipe may be field cut using hand or power saws in accordance with the manufacturer's recommendations. The raw spigot end thus formed shall be filed to remove gasket damaging burrs and to form a standard bevel.

18.06 MANHOLE CONSTRUCTION

18.06.01 Precast Concrete Manholes

Precast manholes shall be constructed in accordance with the details shown on the Plans. Full shop drawing information including design, materials, fabrication details, and installation methods of the proposed precast manholes shall be submitted to the Engineer as specified.

A. Base slabs for precast manholes 48-inch in diameter shall have a minimum thickness of 8 inches as detailed on the Plans. The diameter of the base slab shall be as detailed on the Plans. Reinforcement shall be placed with 2 inches of concrete cover over the top row of steel. Base slabs for precast manholes shall be cast with the lower manhole section and placed on a level, compacted trench bottom.

B. Riser sections, grade rings, and tops shall comply with ASTM C 478 with the exception that Article No. 11 shall be deleted. Base riser sections shall be provided with preformed pipe holes to fit the connectors. The tops of pipe holes shall not be within 4 inches of the bell or socket portion of the riser.

C. Riser joints shall conform to ASTM C 443, to the manufacturer's recommendations and as shown on the Plans. Riser shall be jointed with rubber, plastic, or preformed bituminous joint sealing compound equal to Ram-Nek as manufactured by K.T. Snyder.

D. Manhole sizes up to 10 feet in depth (invert to bottom of brick adjustment ring) shall be a minimum of 48-inch inside diameter for 18-inch diameter and smaller pipe. Manholes over 10 feet in depth shall be the specified diameter for a minimum of 6 feet above the manhole invert; the remaining portion may, at the Contractor's option, be reduced to 48-inch diameter. In no case shall the manhole diameter be less than that required to adequately enclose the sewer pipe.

E. Tops shall have a minimum opening 24 inches in diameter for pipes 18-inch and smaller and 32-inch minimum for pipes 21-inch and larger, with an 8-inch wide flange at the top. For Type I manholes, only concentric cones are acceptable.

F. Top grades of precast manholes shall be established so that a minimum of 3, but no more than 6, courses of brick are placed under the ring and cover casting.

G. Inverts shall be formed using poured-in-place concrete conforming to the Technical Specifications section headed "Concrete, Masonry and Reinforcing Steel" and shall have a minimum strength of 2500 psi.

H. Drop inlets shall be provided where directed by the Engineer or shown on the Plans, and such drop inlets shall conform to details shown on the Plans.

I. A protective coal tar epoxy coating of Carboline (formerly Kop-Coat) Bitumastic 300-M, or approved equal, shall be applied to the exterior surfaces of manholes. One coat shall be applied to the outside and shall yield a final dry film thickness of 9 mils.

J. A dense and durable concrete lining of 100 percent pure fused calcium-aluminate cementitious lining of SewperCoat PG as manufactured by Kerneos Inc., shall be applied in accordance with manufacturer's recommendations, to all interior surfaces of manholes including walls, benches, flow channels, and inverts. Lining shall have a final minimum thickness of 1/2 inch.

K. Manhole wall penetrations for precast manholes shall be as specified for brick manholes.

L. Pipe-to-manhole connections (for New Precast) shall be made with a flexible watertight connector such as Kwik Seal or PSX: Positive Seal as manufactured by Press-Seal Gasket Corporation, or Kor-N-Seal connectors for pipe sizes up to 15-inch and Kor-N-Seal II connectors for pipe sizes 15-inch through 30-inch as manufactured by NPC Inc. Pipe-to-manhole connection shall be installed by the precaster for new manholes, unless specified otherwise.

18.06.02 Fiberglass Reinforced Polyester (FRP) Manholes

The construction of FRP manholes shall conform to the details on the Plans. Full shop drawing information including design, materials, fabrication details, and installation methods of the proposed fiberglass manholes shall be submitted to the Engineer as specified.

A. FRP manholes shall be a one-piece unit consisting of a watertight base and corbel section with a concentric cone, as manufactured by LF Manufacturing, Containment Solutions, or an approved equal.

B. A minimum wall thickness of 0.318 inch shall be used for 48-inch diameter manholes. A minimum wall thickness of 0.50 inch shall be used for manholes larger than 48-inch diameter. All manholes shall have a U/V inhibitor that is homogeneous with the resin mixture.

C. All FRP manholes shall have a minimum 20-year manufacturer’s warranty against corrosion and structural defects. All FRP manholes shall have a minimum AASHTO HS-20 axle loading.

D. Base Slabs: FRP manhole base slabs shall be precast or cast-in-place concrete and shall conform to the thickness specified in the details on the Plans. Cast-in-place concrete base slab reinforcement shall be placed with 3 inches of concrete cover in accordance with Technical Specifications Section 5 headed "Concrete, Masonry, and Reinforcing Steel" Cast-in-place base slabs for FRP manholes shall be cast in place on a level, compacted bottom.

E. Watertight Bottom: The FRP manhole shall have a resin 'fiber-reinforced bottom and a 2 and 1/2-inch-wide anti-floatation flange as a homogeneous part of the bottom section. The manhole bottom shall be a minimum 1/2-inch thick.

F. For FRP manhole depths greater than 10 feet, the manufacturer shall install a minimum of two 1 and 1/2-inch-deep by 3 and 1/2-inch-wide stiffening ribs. Stiffening ribs shall be completely enclosed with resin fiber-reinforcement.

G. FRP manholes shall be anchored to the cast-in-place concrete base slab with 316 stainless steel Kwik Bolt II Wedge anchors and washers as manufactured by Hilti, or approved equal. The size, number of anchors, and embedment depth shall be as shown on the Plans. The anchors shall be installed a minimum of 1 and 1/2 inches from the outer edge of the anchoring flange and shall be equally spaced around the circumference of the manhole bottom.

H. No fiberglass manhole shall have less than 4 feet clear inside height (measured from invert of bench to finished grade.)

I. Inverts shall be as shown on the Plans. A concrete invert may be formed in the field using poured-in-place concrete conforming to Technical Specifications Section 5 headed "Concrete, Masonry, and Reinforcing Steel" and shall have a minimum strength of 2,500 psi.

J. FRP stub outs shall be installed as shown on the Plans or directed by the Engineer, in accordance with approved shop drawings.

K. Pipe-to-manhole connectors for new manholes shall be installed by the FRP manhole manufacturer, unless specified otherwise. Connections for 4-inch through 15-inch pipe shall be made with a Kor-N-Seal boot as manufactured by NPC Inc., or approved equal, and laminated sleeve, as shown in the details on the Plans. Connections of 18-inch and larger shall be with a Link-Seal connector as manufactured by Pipeline Seal & Insulator Inc., or approved equal, and laminated sleeve as shown on the details on the Plans.

L. Laminated sleeves shall be formed using resin and fiberglass of same type and grade as used in the fabrication of the fiberglass manhole. Laminated sleeves may be factory installed or field installed. Field installation shall be by a manufacturer's certified representative or a Contractor-certified person.

M. All holes cut into the FRP manhole shall be by core methods recommended by the manhole manufacturer. A minimum of 12-inch clear wall between cutouts shall be maintained in all directions for each cored hole.

18.07 LAYING AND JOINTING PIPELINES

18.07.01 General

Ductile iron pipelines, PVC pressure pipelines, and HDPE pressure pipelines for force mains shall be laid and jointed as specified in the Technical Specifications section headed "Pressure Pipe Construction." Retainer glands used for PVC force mains shall be UL listed or FM approved and shall have factory certification for pressures up to 188 psi.

PVC, concrete, and FRPMP gravity pipelines shall be laid in conformance to applicable requirements of ASTM C 12 for concrete pipe, ASTM D 2321 for PVC pipe, and ASTM D 3262 and D 4161 for FRPMP.

18.07.02 Line and Grade

Sewers shall be laid to exact line and grade using approved methods consistent with common practice and approved by the Engineer. All line and grade controls shall be furnished by the Contractor. The line and the grade of the sewer, as well as the location of manholes, and all other appurtenances, shall be as shown on the Plans or, as directed by the Engineer. The grade line as given on the Plans indicates the grade of the invert of the sewer pipe. The trench bottom shall form a solid base for the entire length of pipe and shall be capable of supporting the full weight of the pipe and backfill material. The pipe bells shall not bear against the solid bottom of the ditch. Sewers will be inspected with mirrors at intervals during construction and corrected, if necessary, before backfill.

18.07.03 Pipe

Before the pipe is jointed in the trench, the outside of the spigot end and the inside of the bell shall be thoroughly cleaned, wiped, and brushed out to ensure that no dirt or foreign material gets into the finished line. Each pipe shall be inspected for defects and cracks prior to being lowered into the trench. Any cracked or otherwise rejected pipe shall be immediately removed from the site. All pipeline work must be performed in the presence of the Engineer. When work is not in progress, water shall be kept out of the pipe, and the pipe shall be kept closed by means of a test plug. The spigot end shall be centered on grade into the bell end of the last downstream length of pipe, and properly seated. When seating pipe with a pry, lever, or other approved device, care shall be taken to protect the pipe end from damage. Ends damaged in any manner shall be cause for rejection of the pipe.

18.07.04 Service Connections

Service lateral connections shall conform to the Details and shall be installed as indicated or as directed by the Engineer. The Contractor shall locate and record the exact position of such service lateral connections and include actual data on the As-Built Drawings to be furnished to the City.

In new sewer construction, D.I.P. and PVC service connections shall be made by means of a wye or tee. All joints connected to the wye unit shall remain flexible. Service connections on existing mains shall be made using a sewer saddle approved in the Contract Documents and

Technical Specifications. All new sewer service connections shall have a continuous looped trace wire consisting of one (1) 14-gauge minimum solid copper or one (1) 12- gauge copper clad steel tracer wires taped to the top center of the pipe from the cleanout to the main line and back to the cleanout.

Service pipe for all properties shall be laid to the property line and plugged, as shown on the Standard Details. All ends of service lines shall be marked by a permanent stake and where sidewalks or curbs are located nearby, by a chiseled mark cut in the sidewalk or curb. Service pipe shall have a protective cover of not less forty-two (42) inches under all roads and thirty-six (36) inches at all property lines. Inspection of service pipe shall be made before backfill. Service pipe shall have a visibly good line and grade. Shallow service shall be laid by using a four-foot hand level with proper shim attached to one end.
In cases of extra depth where service pipe cannot be laid on a continuous grade to the property line, the Contractor shall then furnish all materials and construct risers as shown on the Plans. When pipe cannot be adequately supported on undisturbed earth, it shall be supported on a concrete cradle. No payment will be made for concrete required to correct conditions resulting from faulty construction methods or negligence.

Service reconnections require adapters for all joints that will not connect properly with ordinary factory joints. Approved pipe cutting methods shall be used to cut any pipe required for the connection. All cut pipe will be ground and smoothed to remove snags and sharp edges. No mortar or collars shall be used on reconnections unless specifically approved by the Engineer.

18.07.05 Watertight Plugs

Watertight plugs of an approved type shall be installed in the ends of all pipe at times when pipe laying is not in progress or as ordered to prevent any contaminated material or vermin from entering the pipe. Pipelines shall be thoroughly flushed out upon their completion and when directed by the Engineer.

18.07.06 Removal of Existing Pipe

Existing pipe no longer in service that is removed from the system shall be disposed of properly by the Contractor. Openings in manholes, sewer lines, or wye branches remaining in place shall be properly plugged and sealed so as to eliminate any possibility of infiltration at the point of separation. All pieces of broken pipe shall be removed from the trench before backfill operations commence. Backfill of the trench shall be as specified in Technical Specifications Section 6- “Excavation and Backfill”. Inspection of structures remaining in place shall be made before backfill.

18.08 TESTING OF SEWER PIPELINES

18.08.01 Pressure Pipelines

Pressure sanitary sewer pipelines shall be tested in accordance with the applicable requirements of Technical Specifications Section 12 headed "Pressure Pipe Construction." Pressure sanitary sewer pipelines shall not be disinfected.

18.08.02 Gravity Pipelines

Gravity pipelines shall be tested for infiltration, exfiltration, deflection, or low pressure air test, at the Engineer's direction. The Contractor shall provide a closed-circuit television video camera inspection, in the presence of the City (or engineer) for all sanitary sewer pipe repairs and all new sanitary sewer construction. The video tape, CD, or DVD shall include time and date, footage, and audio describing any pipe abnormality; also, a CCTV inspection log shall be provided with each completed inspection. Any sewer pipeline found to be unacceptable by the Engineer shall be corrected, repaired, or replaced as directed by the Engineer, at no additional cost to the City.

1. **Infiltration Test**: Upon completion of a section of sewer line, a test for infiltration shall be conducted as directed by the City Inspector. Dewatering of the line to be tested shall terminate at least 2 days prior to the infiltration test. The maximum infiltration allowed in a 24-hour period shall not exceed 200 gallons per inch of diameter per mile of sewer from any section between successive manholes. If the infiltration exceeds the allowable limits, the line shall be further checked and repaired by the Contractor until the infiltration requirements have been met. If any location indicates concentrated infiltration, such location shall be investigated and corrected regardless of the overall infiltration requirement.

   Groundwater level measuring pipes shall be installed at manholes. The groundwater level shall be measured prior to testing. If the groundwater level is at least 2 feet above the highest section of the work being tested, infiltration methods of measurement shall be used. If there is insufficient groundwater head to perform infiltration testing, exfiltration tests will be made.

2. **Exfiltration Test**: If, in the opinion of the City Inspector, the position of a sewer line is above the normal groundwater table, the Engineer may direct the Contractor to perform an exfiltration test. The maximum allowable exfiltration during a 24-hour period shall not exceed 200 gallons per inch of diameter per mile of sewer from any section between successive manholes. An allowance of an additional 10 percent of gallonage shall be permitted for each additional 2 feet of head over a basic 2-foot minimum internal head.

   The exfiltration test shall be performed by plugging the upstream and downstream manholes of the test section, filling the line with water, and maintaining a minimum of 2 feet head of water in the section of line being tested. The rate of exfiltration shall be calculated from the water level drop in the upstream manhole during the 24-hour test period.

3. **Low pressure air test**: At the direction of the City Inspector or Engineer, each pipeline reach may alternatively be tested with air pressure (minimum 3.5 psi, maximum 5 psi) in accordance with UNI-BELL UNI-B-6-98 “Recommended Practice for Low-Pressure Air Testing of Installed Sewer Pipe.” The system passes the test if the pressure drop due to leakage through the pipe or pipe joints is less than or equal to 0.5 psig over the time period described below.

Minimum time period for a 0.5 psig pressure drop

The time period for the test shall be calculated from UNI-B-6-98 as follows:

T = 28.33 DK,
T = Shortest time, in seconds allowed for the air pressure to drop 0.5 psig,
K = .000419 DL, but not less than 1.0,
D = Nominal pipe diameter in inches, and
L = Length of pipe being tested in feet.

4. **Deflection Test**: Prior to final acceptance of the Project, all PVC pipelines shall be deflection tested. The Contractor or a City-approved test lab shall perform the deflection testing at the expense of the Contractor. The deflection test shall be performed a minimum of 7 days after the base has been compacted and sealed.

   The PVC pipe/soil system has been designed so that the maximum installed deflection does not exceed 5 percent and 7.5 percent of the base inside diameter of the pipe as listed in the following table:

Nominal Size (inches)	Base Inside Diameter (inches)	5% Deflection After 7 Days Mandrel (inches)	7.5% Deflection after 30 Days Mandre (inches)
ASTM D 3034 SDR-35			
8	7.665	7.28	7.09
10	9.563	9.08	8.85
12	11.361	10.79	10.51
15	13.898	13.20	12.86
ASTM F 679 TYPE T-1			
18	16.976	16.13	15.70
21	20.004	19.01	18.50
24	22.480	21.36	20.79
27	25.327	24.06	23.43
ASTM D 3034 SDR-26			
8	7.488	7.11	6.93
10	9.342	8.87	8.64
12	11.102	10.55	10.27
15	13.575	12.90	12.56
ASTM F 679 TYPE T-2			
18	17.054	16.20	15.77
21	20.098	19.09	18.59
24	22.586	21.46	20.89
27	25.446	24.17	23.54

The Contractor shall have the option of testing for 5 percent deflection after the base has been compacted and sealed for 7 days; or for 7 and 1/2 percent deflection after the base has been compacted and sealed for 30 days.

If the pipe fails the 7-day, 5 percent deflection test, the Contractor shall immediately conduct a 7 and 1/2 percent deflection test. If the pipe passes the 7 and 1/2 percent deflection test, the Contractor has the option of repairing that section at that time or waiting until a minimum of 30 days after the base has been compacted and sealed and then re-testing for a maximum of 7 and 1/2 percent deflection.

If the pipe fails the 7 and 1/2 percent deflection test after 7 days or at 30 days, the Contractor shall repair that section immediately.

If the Contractor performs the deflection testing rather than employing a City-approved test lab, the following shall apply:

The Contractor shall furnish the mandrel, labor, materials, and equipment necessary to perform the tests as approved by the Engineer. The mandrel shall be pulled through by hand or a hand operated reel in the presence of the Engineer. Prior to performing the deflection tests, the Contractor shall submit to the Engineer certification that the 9-arm mandrels are preset as stated above. Each mandrel shall be engraved with the following:

- Serial Number
- Nominal Pipe Diameter
- Either “ASTM D 3034,” year and either “SDR-35” or SDR-26” or “ASTM F 679,” year and either “Type T-1” or Type T-2”
- Percent deflection as stated above

If the mandrel fails to pass any section of pipe, the Contractor shall excavate and make all repairs (section replacements) necessary to correct the excessive deflection. The Contractor shall then backfill, recompact, reseal the permanent pavement base, and retest the line. If the mandrel fails to pass a second time, the affected section shall be replaced. Re-rounding shall not be permitted.

18.09 SANITARY SEWER PIPE REPAIRS

The contractor shall furnish all labor and materials to repair sanitary sewer pipelines as specified herein

18.09.01 General

A. The Contractor shall excavate and expose suspected damaged pipeline at general locations described by the County. The pipeline shall be exposed for visual inspection four feet on each side of the damaged area or as directed by the County. The City may authorize replacing bad joint materials (vitrified clay or concrete pipe) or removing and replacing the pipe.

B. Crushed stone shall be used in pipe bedding and to help stabilize trench bottoms. Special attention shall be given to compacting the bedding underneath the pipeline and its haunches.

C. Backfilling of repaired pipe shall proceed only in the presence of the Inspector.

18.09.02 Vitrified Clay Pipe Repairs

A. Repairs to VCP including cracked or crushed pipe, cracked bells, offset joints, holes, etc. shall be accomplished by replacing a section of damaged pipe with a piece of new C-900 PVC pipe. Such replacement shall be performed in accordance with the clay pipe manufacturer's recommendations. PVC repair sleeves shall be supplied by Contractor.

18.09.03 Iron Pipe Repairs

A. Repairs to iron pipe shall be accomplished by one of two methods
   1. Application of an appropriate repair sleeve
   2. When the damaged area is larger than recommended for repair sleeves, the damaged section will be cut out and replaced with a section of new ductile iron pipe or PVC, as specified by the Engineer.

B. The connections of new and old pipe shall be accomplished with two new ductile iron solid sleeves. All iron pipe repair work shall be performed in accordance with the manufacturer's recommendations. All repairs, including sleeves, shall be wrapped in polyethylene encasement.

18.09.04 Reinforced Concrete Pipe Repair

A. Reinforced concrete pipe repair shall be accomplished by the use of a reinforced concrete collar. Reinforcing shall be circumferential with a minimum cross-section area as specified in ASTM Des: C76 for Class V, R.C.P. of the same diameter as the damaged pipe. For damaged areas less than two feet in diameter, the collar may be the sole element of repair. A cutout of corrugated metal pipe shall be placed over the damaged area only to aid in the formation of the collar. The collar shall extend three hundred sixty (360) degrees around the pipe and two feet past the damaged area and corrugated metal in the longitudinal axis.

B. For larger repairs, the collar shall be used as a closure. The damaged pipe length shall be removed and become the property of the Contractor. The replacement length may be jointed with the existing pipe on one end only. The existing portion of the joint shall be thoroughly cleaned, and the rubber gasket replaced. After fully seating the joint, the other end shall receive a concrete collar closure extending two feet past the joint in the longitudinal direction. If the new and existing joints are not identical, the closure shall be used at both ends.

18.09.05 Polyvinyl Chlorine Pipe Repair

A. For non-pressure applications, existing and new pipe shall be jointed with flexible couplings with stainless steel straps as approved in these Technical Specifications. Only the flexible

coupling recommended by the manufacturer for the particular pipes to be jointed shall be used

B. For pressure pipe applications, repairs shall be made by one of the two methods as specified for iron pipe, except replacement pipe shall be PVC pressure pipe.

18.09.06 Final Acceptance

A. In the case of pressure pipe applications, after the pipe repair is complete and still exposed, the pipeline will be placed in service. Visual inspection, by the Engineer, of the repair while the pipeline is pressurized will provide tentative acceptance of the repair, provided no leaks are present. Repair of leaks or unsatisfactory work shall be performed at no cost to the City. Final acceptance will be granted after proper backfilling and surface restoration is accomplished.

B. In the case of non-pressure service, the Contractor shall backfill and have the line inspected by a City Inspector. The line shall be inspected by one of two methods: (1) inspection by mirrors and sunlight and/or (2) television inspection as directed by the Engineer.
   1. Upon submission of inspection video records via USB the City will review and verbally respond within one working day. If the repair is not satisfactory to the Engineer, the Contractor will, at no cost to the City, re-excavate, make repairs, television inspect and backfill.
   2. When the repair is satisfactory to the Engineer, the Contractor will be directed to complete surface restoration. Upon satisfactory completion of surface restoration, final acceptance will be granted.

END OF SECTION

SECTION 20 – WASTEWATER SYSTEM CCTV INSPECTION AND CLEANING

20.01 SCOPE OF SERVICES AND WORK PHASING FOR SYSTEM CCTV INSPECTION AND PIPE CLEANING

A. The purpose of this bid is to obtain competitive unit prices for all labor, material, and equipment necessary to inspect via closed-circuit television (CCTV) and clean existing sanitary sewers ranging in size from 6 to 24-inch diameter. The work includes hydraulic root cutting and cleaning, grinding protruding break-in service connections, remote televising and recording of the sewer location and condition. All project locations will be within the City's service area.

B. All City assets will be identified using the established facility identification code (FID) for all inspection reports, geographical exhibits, data sets and asset management tasks. Assets may include, but not be limited to, manholes, clean outs, gravity mains, force mains, air release valves, and conflict structures. Asset FIDs will be provided to the Contractor prior to the start of inspection. Failure to utilize the FID could result in additional inspection at the Contractors expense.

C. Compliance with this contract shall be complete when all conditions set forth in these specifications have been met. The work to be completed on each section of sewer will be performed as applicable and in phases as defined in the following:

20.01.01 PHASE 1: PRE-CLEANING INSPECTION

A. The preferred method for Pre-Cleaning Inspection is color CCTV conforming to NASSCO Pipeline Assessment Certification Program (PACP), and for the data to be exported electronically in a PACP certified format. The data must be shown in an Asset Management and Viewing Software that is accessible to the City of St. Pete Beach. Since this inspection is performed prior to cleaning, it is understood that the video may not provide an "unobstructed view of the entire pipe".

B. The Contractor may propose other methods to the City prior to bid for inspection such as, zoom camera inspection, digital sidewall scanning inspections, acoustical technology, etc.

C. If the Contractor is performing the Pre-Cleaning Inspection, the method must be pre-approved by the City prior to inspection of the sewer interior.

D. It is not the intent of this specification to require bypass pumping to control heavy flow; however, the Contractor must, at a minimum, make reasonable effort to control the flow by using flushing equipment. See this specification for sequencing of cleaning and inspection during heavy flow

scenarios. The Contractor must also consider weather conditions to obtain the best video image of the sewer. This may require the Contractor to delay any video work after major rain events until the system can return to lower dry weather flow.

E. Based on the quality of the results, the City can reserve the right to reduce the scope of the Phase 1 Pre-Cleaning Inspection.

20.01.02 PHASE 2: CLEANING DETERMINATION

Based on the City and Engineer's review, he or she will determine if cleaning or any additional work will be required. At the sole discretion of the City it is to either declare the work on the particular sewer segment complete or notify the Contractor of additional work (i.e. Phase 3: Light Sewer Cleaning, Heavy Cleaning, Deposit Cut, Root Cut Medium, Root Cut Ball, or Lateral Cut)

20.01.03 PHASE 3: SEWER PIPE CLEANING

The Contractor shall perform the assigned additional work, which may include, but is not limited to the following items as defined in these specifications: Light Cleaning, Heavy Cleaning, Root Cut Medium, Root Cut Ball, Deposit Cut, or Lateral Cut.

20.01.04 PHASE 4: POST CLEANING INSPECTION

Final televising of the sewer segments determined by the City include evaluating the condition of the sewer segments after all cleaning has been performed in Phase 3.

A. The recorded video must show the entire circumference of the sewer. Any flow control to remove standing water and debris shall be incidental to the contract. The Contractor shall submit PACP data to include the electronic video reports, logs, etc. for the City's review.

B. The data must be shown in an Asset Management and Viewing Software that is accessible to the City of St. Pete Beach. The Contractor shall provide up to three software licenenses to the City and the Engineer which shall include, but not be limited to, viewing, editing, and exporting capabilities of all inspection data.

C. The segments of sewer to be cleaned and televised through this contract will be located primarily within the paved areas of the public right-of-way; however, there may be some sewer segments that are located within public easements on private property. The successful bidder, with assistance of the City as required, will be responsible to coordinate and gain access to any and all sewer segments and will be responsible for any restoration in accordance with technical specification Section 07 "Surface Restoration". This will include written authorization between

Contractor and landowner. It is the City's right to omit segments that are adequately covered in the Pre-cleaning Inspection video.

20.02 COMPLIANCE AND ACCEPTANCE

Compliance with this contract shall be complete when all conditions set forth in these specifications have been met. The following defines each work item, the level of effort, and quality of work that will be necessary to meet the intent of this specification:

20.02.01 PRE-CLEANING INSPECTION

A. The preferred method for Pre-Cleaning Inspection is color CCTV conforming to National Association of Sewer Service Companies' (NASSCO) Pipeline Assessment Certification Program (PACP), exported electronically in a PACP compliant format. Other methods for inspection, including CCTV, zoom camera inspection, digital sidewall scanning inspections, acoustical technologies, etc. must be preapproved by the City prior to inspection of the sewer interior.

B. Should the level or type of debris differ from the original inspection, the work type can be adjusted by the City to the proper work type and the work shall be paid at the adjusted, proper rate. The Contractor shall be responsible for providing evidence of the change in conditions to the City.

20.02.02 LIGHT SEWER CLEANING (EACH SEGMENT)

A. The Contractor shall clean the sewer and associated manholes, including drop connections and benches, with hydro-jetting equipment. This will require an unlimited amount of passes and a minimum of two passes of high-velocity hydro-jetting equipment to remove all loose debris and collect it for removal in the downstream manhole. The first pass shall be restricted to 800 psi at the nozzle head, and the second and subsequent passes shall be at 1200 psi. All debris must be removed from the sewer, including any debris that may have been washed up into any service connections (does not include known pre-existing conditions in service connections), drop connections or the bench wall of the manholes. This item does not include any root cutting, deposit removal, or grinding of protruding service connections.

20.02.03 HEAVY SEWER CLEANING (EACH SEGMENT)

A. Pipes that cannot be cleaned by the methods described in the Light Sewer Cleaning sub-section shall be cleaned with rotating nozzle equipment. This also includes Deposits Attached Grease (DAGS) if able to remove with rotating nozzle or other mechanical means; not to

include saws or cutters. Compliance with this section requires substantial effort towards cleaning.

B. Under this bid item, the Contractor shall remove all obstructions in the sewer. All debris must be removed from the sewer, including any debris that may have been washed up into any service connections (does not include known pre-existing conditions in service connections), drop connections or the bench wall of the manholes. This includes all grease, rocks, debris, sticks, etc. that will reduce the hydraulic capacity of the sewer and limit future maintenance access of remote equipment. This work will include an unlimited number of passes by high velocity rotating nozzleequipment in conjunction with specialty cleaning equipment. All pipes shall be restored to at least 95 percent of their nominal diameter. Joint sealant shall be removed to within ¼ inch of the pipe wall. Removal of excessive joint sealant will generally not be required until just prior to lining of the pipe segment (if necessary), unless the joint sealant prevents the passage of the CCTV equipment. The Contractor shall be responsible for any damage to the sewer or any service connections. This item does not include cutting/grinding protruding break-in connections, as that work will be paid under a separate bid item.

C. The Contractor shall maintain detailed documentation of cleaning efforts made to remove these items. Such documentation shall be made available to the City at any time.

D. The Contractor shall immediately notify the City if he believes that this level of cleaning will cause a sewer collapse due to the existing deterioration of the host pipe. The City's determination whether to continue or stop work is final.

20.02.04 ROOT CUT (EACH SEGMENT)

A. Root Cut Medium - Removal of Roots Medium (RM), and Root Balls (RB) in one or two joints.

B. Root Cut Ball – Removal of Root Balls (RB) removed in at least 3 joints.

C. The City shall determine if the sewer segment requires root cut cleaning. All roots must be screened, collected, and removed from the sewer for proper disposal.

D. The Contractor shall immediately notify the City if he believes that these activities performed under this paragraph will cause a sewer collapse due to the existing deterioration of the host pipe. City's determination whether to continue or stop work is final.

20.02.05 DEPOSIT CUT (EACH SEGMENT)

A. Removal of Deposits Attached Encrustation (DAE) and Deposits Attached Grease (DAGS) that require a cutter to remove.

B. Under this bid item, the Contractor shall remove all obstructions in the sewer. All debris must be removed from the sewer, including any debris that may have been washed up into any service connections (does not include known pre-existing conditions in service connections), drop connections or the bench wall of the manholes. This includes all deposits, grease, debris, sticks, etc. that will reduce the hydraulic capacity of the sewer and limit future maintenance access of remote equipment. This work will include an adequate number of passes using high velocity hydro-cleaning equipment required to produce a clean pipe in accordance with these specifications. A mechanical/hydraulic root, chain cutter, etc. may be used where necessary at no additional cost to the City; however, the Contractor shall be responsible for any damage to the sewer or any service connections. This item does not include cutting/grinding protruding break-in connections, as that work will be paid under a separate bid item

C. Compliance with this section requires substantial effort towards cleaning, chipping, cutting, grinding, etc. to remove hardened deposits, grease, etc. The Contractor shall use remote CCTV equipment to monitor the progress of the work and ensure that the sewer is not damaged.

D. The Contractor shall immediately notify the City if they believe that activities performed under this paragraph will cause damage due to the existing deterioration of the host pipe. The City's determination whether to continue or stop work is final.

E. The Contractor shall maintain detailed documentation of cleaning efforts made to remove these items.

F. If attached deposits cannot be removed by tools normally used in the industry, the City should be consulted immediately. The City and the Contractor should discuss whether to cancel the work on that segmentation or negotiate a flat rate or hourly rate for the Contractor to do the work.

20.02.06 LATERAL CUT (EACH SEGMENT)

A. Removal of protruding laterals shall comply with Specification 36 and the requirements outlined below.

B. Removing protruding laterals, excludes DIP, SP, CAS etc.

C. The City shall determine when break-in service connections will require grinding based on his review of the initial survey television inspection. The Contractor shall cut/grind the protruding service connection by using a remote grinding/cutting device capable of removing, concrete, vitrified clay, PVC and other types of pipe material. The device shall be specifically designed to cut/grind protruding service connections. The Contractor shall use remote CCTV equipment to monitor the progress of the work and ensure that the service connection is not damaged.

D. The protruding break-in service connection shall be cut/ground flush to the main sewer pipe without scouring or damaging the main sewer or service connection. All cuttings must be screened, collected, and removed from the sewer for proper disposal.

E. During the final survey television inspection, the Contractor shall slowly pan the entire circumference of the trimmed connection to verify the quality of the work.

F. The Contractor shall immediately notify the City if he believes that the pipe is not structurally sound. The Contractor and City shall discuss the severity and risk of cutting/grinding the lateral. The City shall then determine, if they want the lateral cut/ground, at the City's risk, or if the work should not be performed on this contract.

G. If other than typical lateral materials are encountered, the Contractor shall notify the City and the City and Contractor should discuss the ability, costs and risks associated with cutting/grinding the lateral. The City shall decide whether to cut/grind the lateral or to not cut/grind the lateral. If the City decides to cut/grind the lateral, the price should be negotiated between the City and Contractor, prior to cutting/grinding the lateral.

20.02.07 DEBRIS RECORDS

The Contractor shall keep records of types of debris, removed from each segment of pipe and provide these records to City in the format requested by City.

20.02.08 FINAL SURVEY TELEVISION INSPECTION

As in the initial survey television inspection pay item, CCTV inspections will be conducted entirely in digital format.

All CCTV work shall conform to the most current NASSCO PACP standards. The documentation of the work shall consist of NASSCO PACP CCTV Reports, Unmodified NASSCO PACP database, logs, electronic reports, etc. noting defects and observations encountered during the inspection.

All City assets will be identified using the established facility identification code (FID) for all

inspection reports, geographical exhibits, data sets and asset management tasks. Assets may include, but not be limited to, manholes, clean outs, gravity mains, force mains, air release valves, and conflict structures. Asset FIDs will be provided to the Contractor prior to the start of inspection. Failure to utilize the FID could result in additional inspection at the Contractors expense.

Acceptance of pipe segment cleaning shall be made upon the successful review of the CCTV inspection by the Engineer. If the CCTV inspection shows the cleaning to be unsatisfactory, the Contractor shall be required to repeat the cleaning and CCTV inspection of the pipe segment until the cleaning is shown to be satisfactory. Such repeat cleaning and CCTV inspection shall be made at the Contractor's expense.

20.03 CLEANING EQUIPMENT

A. The wastewater system shall be cleaned with industry standard truck-mounted high velocity hydro-cleaning equipment. No mechanical bucket machinery will be acceptable for the cleaning process. The equipment shall be provided with a minimum of 500 ft of one-inch 10 high-pressure hose with a selection of high velocity nozzles, as required for the cleaning and heavy cleaning operations. The equipment shall have a minimum usable water capacity of 1000 gal. The pumps shall be capable of delivering a minimum 60 gpm at 3000 psi. Pressure to the nozzle shall be regulated by a relief valve, adjustable from a to 1,500 psi minimum. The nozzles shall produce a scouring action from 15 to 45 degrees in all size pipes to be cleaned. The equipment shall carry its own 1,000 gal water tank capable of holding corrosive or caustic cleaning or sanitizing chemicals, engines and pumps, and a hydraulically-driven hose reel. The equipment shall also include a high velocity washing hose for ancillary cleaning of the walls and floor of manholes. The hose shall have an adjustable nozzle capable of producing flow from a fine spray to a solid stream. All controls shall be located so that the equipment can be operated above ground. During hydro-cleaning, the Contractor shall restrict the flow level in the pipe to a maximum of 50 percent of the pipe diameter. Particular care should be taken to avoid flooding house connections during hydro-cleaning operations.

B. The Contractor shall provide equipment capable of removing all sand, dirt, rocks and other debris from the pipe segment to allow unobstructed remote CCTV inspection of all internal pipe surfaces.

C. The Contractor shall certify that backup cleaning equipment, including machines, devices, tools, etc, is available and can be delivered to the site within 24 hours.

D. Any blockages of building service connections resulting from the cleaning or other items of work shall be removed by cleaning of the building connection by the Contractor, at his own expense. Any damage caused by flooding of building service connections shall be corrected by the Contractor, at his own expense.

E. The Contractor shall provide specialty equipment capable of mechanically removing all attached,

hardened and/or cemented debris including, but not limited to, roots, grease, calcification, tuberculation, joint sealant, other hardened or tightly adherent deposits, etc. which cannot be removed by the use of industry standard high velocity hydro-cleaning equipment alone. Specialty equipment shall include, but is not limited to, a root saw, spring blade root cutter chuck or approved equal.

20.04 REFERENCED DOCUMENTS

A. All work must also conform to the latest edition of the following specifications:

1. State Department of Transportation, Construction and Materials Specification.
2. Rules and Regulations and Standard Drawings.
3. Rules and Regulations of the Office of the County/City Engineer.
4. If there is a difference in these specifications, the Rules and Regulations shall govern, DOT Specification.
5. NASSCO PACP Standards.
6. Other standards as appropriate.

B. Notification

1. If observed defects are believed to be such that further cleaning operations may compromise the structural integrity and/or cause the pipe to become unusable, the Contractor must provide written communication to the City's designee of the observed condition(s) and reason to believe that continued cleaning operations may cause substantial damage. The City will then direct the Contractor as to what services, precautions, etc., the City will require of the Contractor. If the contract documents do not address this potential, then the City and Contractor will negotiate in good faith, the conditions under which the work is to continue or cease to continue.

2. This exception may only be used to prevent asset damage and shall not be used to eliminate difficult or adverse cleaning areas that were previously documented in these documents or by prior written communication with the City.

20.05 GENERAL EXECUTION

A. The Contractor shall furnish and maintain, in good condition, all cleaning and televising equipment necessary for proper execution of the work.

B. Maintaining Flow: It will be the responsibility of the Contractor, throughout the tenure of this contract, to provide and maintain sufficient flow at all times to pass any flash of storm flow of drainage ditches and prevent any backwater flooding due to obstruction caused by cleaning or CCTV equipment.

C. Retrieval of Materials and Equipment: It shall be the Contractor's responsibility to remove

materials and equipment that has been lodged in the sewer from cleaning, television inspection, or point repair excavations.

D. After determining the preliminary requirements and the feasibility of effective CCTV inspection, the Contractor shall thoroughly clean all required pipe segments as required to permit an unrestricted inspection by industry standard CCTV inspection equipment. Particular emphasis shall be afforded the removal of accumulated grease, roots, sand, rocks, bricks, sludge and other debris so that the CCTV inspection will clearly show all portions of the pipe being inspected. Acceptance of pipe segment cleaning shall be made upon the successful completion of the CCTV inspection and shall be defined as removing sufficient material to permit an unrestricted view of the pipe internal surfaces and to ensure an effective rehabilitation of the pipe segment, all to the satisfaction of the Engineer.

E. Except during drought conditions, water required for the cleaning will be provided by the City or County at locations to be specified by the City. The City or County shall furnish and install water meters at all points where water is drawn from the City's supply. The City or County will charge a fee for the water used. A backflow prevention device shall be used to prevent contamination of the potable water system. The Contractor is responsible for any damage resulting from improper operation of hydrants. Do not use or obstruct a fire hydrant when there is a fire in the area.

F. The Contractor shall not waste water from the public water supply because of improper connections or from hydrants left open.

G. The Contractor shall remove all bricks, rocks, debris, sludge, dirt, sand, grease, roots and other materials from the pipe segment ordered to be cleaned and collect and remove the resulting debris from the downstream manhole of the pipe segment. Passing waste material between manholes, causing accumulations of sand, system stoppages, or damage to the pumping equipment shall not be permitted. When necessary, a dam trap or weir and screen shall be temporarily installed in the downstream manhole in such manner that debris and solids shall be trapped and retained for subsequent removal.

H. Waste and debris cleaned from the pipe segment shall be removed at the downstream manhole by pumps or other means. The discharge and drainage stream shall be returned downstream to the wastewater collection system for disposal. Under no circumstances shall wastewater or solids be dumped onto the ground surface, street, or into ditches, catch basins or storm drains. All solid and semi-solid debris resulting from the cleaning operations shall be removed from the site and taken to the wastewater treatment facility to which the debris would have arrived in the absence of the cleaning operation, unless directed otherwise. The Contractor is responsible for transporting the debris and must remove and properly dispose of excess water from the debris prior to disposal at the City's wastewater treatment facilities.

I. Where access to manholes in easements and rights-of-way is required, the Contractor shall obtain permission from the homeowner for equipment access.

J. Barricades and warning signs shall be used in work areas and around open manholes. The Contractor shall furnish and maintain traffic controls and safety devices as required.

K. Employ satisfactory precautions to protect the pipe and manholes from damage that might be inflicted by improper selection of the cleaning process or improper use of the equipment. Immediately notify Engineer if fresh soil, pieces of pipe, or other visible signs of potential problems occur during cleaning operation. When using hydraulically propelled devices, take precautions to ensure that the water pressure created does not cause damage or flooding to public or private property. Do not surcharge the wastewater beyond the elevation that could cause overflow of wastewater into area waterways or buildings, or onto the ground.

L. The Contractor shall clean upstream reaches of the system before the downstream reaches are cleaned. Hydro-cleaning equipment shall be inserted in the downstream manhole of the pipe segment, and the cleaning work shall proceed from upstream to downstream. Winching equipment used shall not damage the pipe or manholes.

20.06 SUBMITTALS

A. All submittals shall comply with Specification Section 03 - Submittals and are due as scheduled. Work will not proceed until all submittals are received and approved. The project manager reserves the right to adjust the due dates of the submittals based on Contractor performance. The Contractor shall label each submittal indicating what is represented, name of Contractor, and project number. All submittals identified as being in error shall be re-performed and corrected at the Contractor's expense.

B. Submittals Required with Bid Documents include:

1. List of references per specifications
2. Documentation of Certification of PACP Software
3. Asset Management and Viewing Software

C. Submittals required seven (7) days prior to the Pre- construction Meeting for CCTV Inspection or Pipe Cleaning

1. Name of the project supervisor and resumes.
2. Documentation of NASSCO PACP certification for all CCTV operators, database and software.
3. Site Safety Plan. A complete generic site safety plan must be submitted one week prior to the pre-construction meeting. Work will not begin until an approved site safety plan is in place.
4. Sample inspection CCTV data and video or data from other approved inspection method.
5. Acknowledgment of required nomenclature utilizing the provided FID

D. Submittals Required for the Pre-construction Meeting

1. An initial comprehensive schedule of work to be approved by the City.
2. Management Organization: Provide an organization chart depicting the essential organizational elements and senior personnel of the proposed Contractor and the functions and interrelationships of the personnel proposed to provide technical support, project management and supervision for this project. Provide succinct resumes of the personnel proposed to provide technical support and project management for this project. The personnel designated in the management summary for essential positions shall not be changed except with the permission of City. The City will only approve such a change when, in its opinion, the substitute personnel have equal or greater qualifications and experience to those intended to be replaced.
3. Proof that Contractor is an approved/bonded Contractor with the City.

E. Submittals Required One Week Prior to Any Cleaning & Televising Work

1. Site specific site safety plan addenda.
2. Entry releases, if applicable

F. Weekly Submittals

1. Detailed updates to the work schedule will be provided to the project manager no later than 1:00 p.m. on the Friday preceding the next week's cleaning and televising work.
2. USB External Storage Drive with CCTV videos, logs, and / or electronic worksheets submitted 7 days prior to work). All field paperwork must be submitted before the Contractor’s invoice will be processed for payment.
3. Corrections to punch list items as required by the project manager to fulfill the requirements of this specification.

G. Final Submittals Prior to Payment

1. Corrections to punch list items as required by the City to fulfill the requirements of this specification.

20.07 OWNER RIGHTS

A. The City reserves the right to stop the work when, in the project manager's judgment, the Contractor's work or activities are threatening the health and safety of the public or endangering the environment or endangering the waters of the state. Work shall not proceed until a satisfactory resolution has been achieved, as determined in the sole and unfettered opinion of the City.

B. The Contractor or Subcontractor shall not perform any work which is not specifically identified in the work schedule unless approved by the City. Notification of such work must be received no later than 8:00 a.m. on the day the work is to be performed. A list of persons available to be notified will be given at the pre-construction meeting.

20.08 EMERGENCY RESPONSE

The Contractor shall provide a telephone number and pager number to the City. These numbers are intended for the project manager's use in contacting the evening/weekend/holiday emergency work crew for emergencies resulting from the Contractor's actions or lack thereof during this project. This crew shall be responsible for contacting the City within one-half hour after the first verbal or electronic notification. If the Contractor's crew has not responded to the site of the emergency within one hour of the first summons, verbal or electronic, the City will make all necessary repairs and bill the Contractor for all work performed. Costs related to the emergency response will be incidental to the contract and not measured for payment.

20.09 SEQUENCE OF INSPECTION AND CLEANING

A. The Contractor shall coordinate with the City and any Jurisdictions required to isolate any pipe segments with significant flow that would prohibit cleaning and inspection. The cleaning and inspection of the pipe segment shall be done outside of peak hour flows. The steps to clean and inspect the pipe segment include:

1. The lift/pump stations contributing flow into the sewer line to be inspect and cleaned must be pumped down.
2. Once stations are pumped down, the stations shall be turned off and the sewer line must be plugged to allow work to commence.
3. The Contractor must monitor the levels within the stations at all times while work has started with City personnel present.
4. After inspection and cleaning within the pipe segment is completed, the plug shall be removed and the stations shall be restarted to be pumped down again.
5. Repeat steps 1-4 for each segment of sewer line to be cleaned or inspected.

B. The Contractor is responsible for the operation and maintenance of the bypass systems.

C. The Contractor shall perform all work associated with bypassing without causing damage to existing improvements to remain, and without causing a spill of sewage outside the sewer system. Any damage results from the Contractor's work shall be repaired or replaced to the satisfaction of the City, and at no cost to the City. All fines, and costs associated with the cleanup of spills, shall be the responsibility of the Contractor.

END OF SECTION

SECTION 21 – CURED-IN-PLACE-PIPE (CIPP)

21.01 GENERAL

It is the intent of this section of these Specifications to provide for the reconstruction of pipelines and conduits by the installation of a resin-impregnated flexible tube that is either inverted or pulled into the original pipeline/conduit and expanded to fit tightly against said pipeline by the use of water or air pressure. The resin system shall then be cured by elevating the temperature of the fluid (water/air) used for the inflation to a sufficient enough level for the initiators in the resin to affect a thermosetting reaction.

The Contractor shall furnish all materials, labor, equipment, and services necessary for liner installation including: traffic control, pump around pumping and/or diversion of wastewater flows, cleaning and closed circuit television video (CCTV) inspection of the pipe segment to be lined, service lateral reconnection, final CCTV inspection and testing of lined pipe system, surface restoration, and cleanup of the Work site.

The Contractor is advised that this Contract requires work in active wastewater collection systems and shall follow all federal, state and local requirements for safety in confined spaces. The Contractor shall conform to all guidelines by the Occupational Safety and Health Administration (OSHA) Federal Regulations; 29 CFR Ch. XVII, Section 1910.146 Confined Space Entry.

21.02 REFERENCE DOCUMENTS

This Specification references ASTM D5813 (Standard Specification for Cured-in-Place Thermosetting Resin Sewer Pipe) ASTM F1216 (Standard Practice for Rehabilitation of Existing Pipelines and Conduits by the Inversion and Curing of a Resin-Impregnated Tube), ASTM F1743 (Standard Practice for Rehabilitation of Existing Pipelines and Conduits by Pulled-In-Place Installation of Cured-In-Place Thermosetting Resin Pipe), and ASTM D3839 (Standard Practice for Underground Installation of “Fiberglass” (Glass-Fiber Reinforced Thermosetting Resin) Pipe).

21.03 QUALIFICATION REQUIREMENTS

The system proposed (materials, methods, workmanship) must be proven through previous successful installations to an extent and nature satisfactory to the City and the Engineer that is commensurate with the size of the project being proposed. Since CIPP is intended to have a 50-year design life, only products deemed to have this performance will be accepted. All products and installers must be pre-approved prior to the formal opening of proposals.

Products and Installers seeking approval must meet all of the following criteria to be deemed commercially acceptable:

For a Product to be considered Commercially Proven, a minimum of 250,000 linear feet and/or 1000 line sections must have been successfully installed in North America. The Manufacturer (Li–censor) shall have completed sufficient enough testing to document that the materials and the method(s) of installation proposed will produce the desired long-term performance. All products used shall conform to the Contract Documents and these Technical Specifications. Chemical grout designed for injection shall be: AV -100 chemical grout as manufactured by Avanti International, or approved equal.

For an Installer to be considered Commercially Proven, the Installer must satisfy all insurance, financial, and bonding requirements of the City, and must have at least three years active experience in the commercial installation of the product bid. The Installer's key personnel shall have at least 100,000 linear feet and/or 300 line sections of successful experience (included in this experience shall be a sufficient quantity of installations in the sizes proposed for this project). The Installer shall be "ISO" certified or demonstrate that he/she has a similar quality assurance system in place. Additionally, the Contractor shall be certified and/or licensed by the liner manufacturer(s) as an approved installer for the products referenced in this specification

Documentation for products and installers seeking pre-approved status must be submitted no less than two weeks prior to the proposal due date to allow time for adequate consideration. The City will advise of acceptance (or rejection) a minimum of three days prior to the due date. All required submittals must be satisfactory to the City.

21.04 SUBMITTALS

The Contractor shall submit the following information:

1. Manufacturer's certification that the materials to be used meet the referenced standards and these specifications.

2. License or certificate verifying Manufacturer's/Licensor's approval of the installer.

3. Proposed equipment and procedures for accomplishing the work.

4. Lining Manufacturer's product data and instructions for resin and catalyst system.

5. Contractor's procedures for sealing CIPP liners from groundwater infiltration/migration at manholes. Details of all component materials and construction details such as hydrophilic rubber seals.

6. Manufacturer's or Assembler's guidelines for storage procedures and temperature control, handling and inserting the liner, curing requirements and details, service connection methods, and trimming and finishing.

7. Manufacturer's or Assembler's guidelines for minimum and maximum pressures, temperatures, and time durations to be used during liner inversion, cure, and cool down. 8. Procedures for cool down and relieving static head after the CIPP liner is cured

8. Manufacturer's or Assembler's guidelines for factory and/or field (whichever applies) wet out procedures including: volume of resin per unit of liner, roller gap setting, mixing ratios and procedures for resin and catalyst/hardener, shelf life of resin, pot life of resin, and required wet out procedure to ensure full saturation.

9. The Contractor shall also provide field measurements and liner sizing calculations which demonstrate the liner wall thickness design for each pipe segment and that the liner has been properly undersized to avoid the creation of wrinkles or folds. Tabular liner wall thickness calculations shall be provided for each pipe diameter in no less than 1-foot increments from 1 foot to 6 feet cover depth and in 2-foot cover depth increments thereafter. The tabulated liner wall thickness

for each pipe diameter/cover depth interval shall be the maximum wall thickness calculated over the cover depth interval. Special liner wall thickness calculations shall be submitted for installations with less than 3 feet of cover. The liner wall thickness shall be increased as required based on actual pipe ovality determined by the pre-installation CCTV inspection.

10. The Contractor shall submit pump around pumping and/or diversion plans to the Engineer a minimum of 14 days prior to the needed use for review and approval. In some cases verbal confirmation of the plan and approval with the Engineer or City Inspector may be used in lieu of a written plan. The Contractor shall notify the Engineer a minimum of 48 hours prior to commencement of the pump around operation. Failure to receive approval by the Engineer or City Inspector may result in the Contractor's Work being halted at no cost to the City.

11. The Contractor shall submit drawings that identify the liner insertion, pump around pumping locations and methods with sufficient detail to assure that the Work can be accomplished without spill or discharge of wastewater. The pump around pumping plan shall include an emergency response plan to be followed in the event of a failure of the pumping system.

21.05 MATERIALS

21.05.01 The Tube

The tube shall consist of one or more layers of a flexible needled felt or an equivalent nonwoven or woven material, or a combination of nonwoven and woven materials, capable of carrying resin and withstanding the installation pressures and curing temperatures. The tube should be compatible with the resin system to be used on this project. The material should be able to stretch to fit irregular pipe sections and negotiate bends.

The tube should be sewn or flame-bonded to a size that, when installed, will tightly fit the internal circumference and the length of the original conduit. Allowances should be made for the longitudinal and circumferential stretching that occurs during placement of the tube.

The tube shall be uniform in thickness and when subjected to the installation pressures will meet or exceed the designed finish wall thickness.

Any plastic film applied to the tube on what will become the interior wall of the finished CIPP shall be compatible with the resin system used, translucent enough that the resin is clearly visible, and shall be firmly bonded to the felt material.

The outside of the tube shall be marked for distance at regular intervals along its entire length, not to exceed 5 feet. Such markings shall also include the lining manufacturer’s name or identifying symbol.

Seams in the tube shall be stronger than the non-seamed felt.

The minimum tube length shall be that deemed necessary by the Contractor to effectively span the distance from the inlet to the outlet of the respective manholes or access points, unless otherwise specified. The Contractor shall verify the lengths in the field before impregnation of the tube with

resin. An individual tube insertion operation may be made over multiple contiguous pipe segments as determined in the field by the Contractor and reviewed by the Engineer.

21.05.02 The Resin System

The resin system shall be a corrosion resistant polyester, vinylester, or epoxy and catalyst system that when properly cured meets the minimum requirements given herein or those that are to be utilized in the design of the CIPP for this project. Resin shall not be subjected to ultraviolet light and shall form no excessive bubbling or wrinkling during lining.

21.06 STRUCTURAL REQUIREMENTS

The design thickness of the liner shall be arrived at using standard engineering methodology. ASTM F1216, Appendix X1, has such an acceptable methodology that may be used where applicable. The long-term flexural modulus to be used in the design shall be verified through testing. The long-term modulus shall not exceed 50% of the short-term value for the resin system unless the tube contains reinforcements. In the event that a reinforced tube is utilized, the long-term flexural modulus shall be the percentage of the short-term modulus as determined by the above referenced testing.

The layers of the finished CIPP shall be uniformly bonded. It shall not be possible to separate any two layers with a probe or point of a knife blade so that the layers separate cleanly or such that the knife blade moves freely between the layers. If separation of the layers occurs during testing of the field samples, new samples will be cut from the work. Any reoccurrence may be cause for rejection of the work.

The finished CIPP shall fit tightly to the host pipeline at all observable points and shall meet or exceed the minimum thickness established by the design process. The materials properties of the finished CIPP shall meet or exceed the following structural standards:

MINIMUM PHYSICAL PROPERTIES

Property	ASTM Test Method	Polyester System	Filled Polyester System	Vinyl Ester System
Flexural Strength	D790	4,500psi	4,500psi	5,000psi
Flexural Modulus (Initial)	D790	250,000psi	400,000psi	300,000psi
Flexural Modulus (50 Yr)	D790	125,000psi	200,000psi	150,000psi
Tensile Strength	D638	3,000psi	3,000psi	4,000psi

The required CIPP liner wall thickness shall be based, as a minimum, on the physical properties in Section 17.080 of this Specification, in accordance with the design equations in the Appendix of ASTM F1216, and the following design parameters:

Design Safety Factor	=	2
Retention Factor for Long-Term Flexural Modulus to be used in Design *(as determined by Long-Term tests described in Section 17.08B)*	=	1% - 50%

Ovality	=	5%
Groundwater Depth (above invert)	=	Assume at Existing Grade
Soil Depth (above crown)	=	Based on field measurements
Soil Modulus	=	700 psi
Soil Density	=	120 pcf
Live Load	=	AASHTO HS - 20
Design Condition	=	Fully Deteriorated
Enhancement Factor	=	7.0
Poisson's Ratio	=	0.3

The CIPP liner material shall conform to the minimum wall thicknesses, as listed below:

MINIMUM WALL THICKNESSES

CIPP	Thickness
4"-6"	3.0 mm
8"-12"	6.0 mm
15"	7.5 mm
18"-21"	9.0 mm
24"-27"	10.5 mm
30"-36"	12.0 mm
42"	13.5 mm
48"	15.0 mm

Any layers of the tube that are not saturated with resin prior to insertion into the host pipe shall not be included in the CIPP liner wall structural thickness computation.

21.07 INSTALLATION

The CIPP shall be installed in accordance with the practices given in ASTM F1216 (for direct inversion installations) or ASTM F1743 (for pulled-in-place installations). The quantity of resin used for the tube's impregnation shall be sufficient to fill the volume of air voids in the tube with additional allowances being made for polymerization shrinkage and the anticipated loss of any resin through cracks and irregularities in the original pipe wall. A vacuum impregnation process shall be used in conjunction with a roller system to achieve a uniform distribution of the resin throughout the tube. The impregnated liner tube shall be transported to and stored at the site in such a manner that it will not be damaged, exposed to direct sunlight, or result in any public safety hazard. The impregnated liner tube shall be kept cool during shipment and storage. All materials shall be subject to inspection and review prior to installation.

Contractor shall ensure that an Engineer approved procedure is followed for sealing the liner from all groundwater infiltration and migration at connections to and within all manholes. Hydrophilic sealing material shall be placed per the Manufacturer's recommended product guidelines and Contractor's/Manufacturer's approved procedures prior to liner installation. Temperature gauges shall be placed at the upstream and downstream ends of the reach being lined to monitor the pressurized fluid's (air or water) temperature. In addition to monitoring the temperature inside the tube, temperature gauges shall be placed between the host pipe and the liner at as many points as is practical to record the heating that takes place on the outside of the liner. The impregnated tube shall be inserted through an existing manhole or access structure by means of the manufacturer's recommended installation process in accordance with ASTM F1216. The application of hydrostatic head, compressed air, or other means shall fully extend the CIPP liner to the next designated manhole or termination point and inflate and firmly adhere the liner to the host pipe wall. The liner tube shall be installed at a rate less than 10 feet per minute at all times. If the CIPP liner installation fails, the Contractor shall be responsible for operating the bypass pumping equipment for the additional time required until the installation can be completed, at the Contractor's expense.

Curing of the resin system shall be as per the Manufacturer (Licensor) of the CIPP product. The temperatures achieved and the duration of holding the pressurized fluid at those temperatures shall be per the Manufacturer's (Licensor's) established procedures. If a heat source is required after placement is completed, suitable heat source and distribution equipment shall be provided. The equipment shall be capable of circulating hot water, air, and/or steam throughout the section by means of a pre-strung hose which has been perforated in accordance with the manufacturer's recommendations or other methods acceptable by the Engineer to raise the temperature uniformly above the temperature required to affect a resin cure. This temperature shall be determined by the manufacturer based on the resin/catalyst system employed. The heat source piping shall be fitted with continuous monitoring thermocouples to gauge the temperature of the incoming and outgoing water, steam, and/or air supply. Water, steam, or air temperature during the cure period shall meet the requirements of the resin manufacturer as measured at the heat source inflow and outflow return lines. The Contractor shall provide standby equipment to maintain the heat source supply. An additional continuous monitoring thermocouple shall be placed between the impregnated felt tube and the pipe invert at the remote manhole and at a point midway between the upstream and downstream manholes to determine the temperature during the cure. The temperature during the cure shall not be less than 130 degrees F at the boundary between the pipe wall and the liner unless otherwise required because of the resin system used. The initial cure shall be deemed to be completed when inspection of the exposed portions of the liner appears hard and sound and the remote temperature sensors indicate that an exotherm has occurred. The cure period shall be of duration and temperature recommended by the resin manufacturer during which time the recirculation of the water, steam, and/or air and cycling of the heat exchanger continuously maintain the required temperature. A data logger shall be used for Main Liners to continuously record temperature, pressure and time during heating, cure and cool down of the liner at the insertion, intermediate and termination manholes. Where requested, this data shall be provided to the Engineer for each pipe segment.

The cured liner shall be cooled to a temperature below 100 degrees F before relieving the static head or pressure in the lined pipe and returning normal flow back into the system. The cool down may be accomplished by introducing cool water or air into the lined pipe. Care shall be taken in the release of the static head or pressure so that a vacuum will not develop which could damage the newly installed liner. Water for cooling shall be supplied by the Contractor. The finished liner shall be continuous over the

length of the host pipe and be free from defects such as dry spots, delamination and lifts. All materials other than the cured liner should be removed from the pipe by the Contractor.

21.08 CIPP MAIN LINER TERMINATION AND CONNECTION IN MANHOLES

A. The liner shall achieve a watertight seal through the manhole channel/invert and at the host pipe(s) where it enters/exits any manhole. The use of fiber felt and a suitable resin system, hydrophilic rubber waterstops, injection grouting, or other Engineer approved methods compatible with the liner shall be used to ensure a watertight CIPP liner system. CIPP liner entries at manholes shall be smooth and free of irregularities. The top half of the CIPP liner shall be neatly cut at least 4-inches away from the wall.

B. The channel in the manhole shall be a smooth continuation of the pipe(s) and shall be merged with other pipes or channels. All manholes shall be individually inspected for liner cut off, benches and sealing Work. Any visible leaks through or around the CIPP liner shall be corrected by an approved method at the Contractor's expense. It is anticipated that some pipe to manhole connections will require supplementary efforts to affect an acceptable watertight seal.

C. The channel in the manhole shall be a smooth continuation of the liner and pipe(s) and shall be merged with other channels. Inverts and/or benches shall be resurfaced/repaired (or constructed where necessary as directed by the Engineer) to provide a smooth flow channel. The Engineer may also require that the manhole floor and base section receive an approved monolithic coating which is chemically compatible with the CIPP liner, and any chemical/cementitious grout or repair material used in the manhole.

21.09 SERVICE RECONNECTION

A. The Contractor shall be responsible for internally reopening the service connections to the lined pipe using a pivot-head CCTV inspection camera and a remote cutting tool. The Contractor shall locate the service connections from inside the lined pipe, cut a hole matching the connection diameter, and grout the area where the service connection enters the lined pipe to produce a watertight seal approved by the Engineer. Grouting of service connections shall be accomplished using a "Logiball" type lateral packer to seal the first 18 inches of the service connection in accordance with the manufacturer's instructions and the Technical Specifications. The Contractor shall provide a nearly full-diameter hole, free from burrs, loose or abraded material, hanging fibers or projections, and with a neat, smooth and crack-free edge. The hole shall be 95 percent minimum and 100 percent maximum of the original service connection diameter. The invert of the service connection shall match the bottom of the reinstated service opening. The Contractor shall certify he has a minimum of 2 complete working cutters plus spare key components on the site before each installation. All cuttings shall be collected and disposed of properly.

B. All service connections shall be reopened including those that go to unoccupied or abandoned buildings or vacant lots, unless directed otherwise by the Engineer. Begin reconnection of services within four hours after liner insertion. The Contractor shall initially reopen each connection in an expeditious manner with a less than a full size opening to release wastewater temporarily stored in the service lateral. The Contractor shall then complete reconnection of all services within 24 hours. The Contractor shall immediately reopen any missed connections and repair any holes drilled in

error. Faulty cuts shall be repaired by methods approved by the Engineer at no additional cost to the City.

C. It is the intent of these Specifications that service connections be reopened without excavation. No additional payment will be made for excavations for the purpose of reopening connections and the Contractor will be responsible for all costs and liability associated with such excavation and restoration work.

21.10 INSTALLATION RESPONSIBILITIES FOR INCIDENTAL ITEMS

It shall be the responsibility of the Owner to locate and designate all manhole access points open and accessible for the work, and to provide rights of access to these points. If a street must be closed to traffic because of the orientation of the pipeline, the Owner shall institute the actions necessary to do this for the mutually agreed time period. The Owner shall also provide free access to water hydrants for cleaning, installation of the tube, and other work items requiring water.

The Contractor, when required, shall remove all internal debris out of the pipeline that will interfere with the installation of the CIPP. The Owner shall provide a dumpsite for all debris removed during the cleaning operations. Unless stated otherwise, it is assumed that this site will be at or near the sewage treatment facility to which the debris would have arrived in absence of the cleaning operation. Any hazardous waste encountered during this project will be considered as a changed condition.

The Contractor, when required, shall provide for the flow of sewage around the section, or sections, of pipe designated for rehabilitation. The bypass shall be made by plugging the line at the existing upstream manhole and pumping the flow into a downstream man- hole or adjacent system. The pump and bypass lines shall be of adequate capacity and size to handle the anticipated flow. The City may require a detail of the bypass plan to be submitted.

Experienced personnel trained in locating breaks, obstacles, and service connections by close circuit television shall perform inspection of the pipelines. The interior of the pipe- line shall be carefully inspected to determine the location of any conditions that may pre- vent proper installation of the CIPP into the pipelines, and it shall be noted so that these conditions may be corrected. A videotape and suitable log shall be kept for later reference by the City.

It shall be the responsibility of the Contractor to clear the line of obstructions such as solids and roots that will prevent the insertion of CIPP. If pre-installation inspection reveals an obstruction such as a protruding service connection, dropped joint, or a collapse that will prevent the installation process, and it cannot be removed by conventional sewer cleaning equipment, then the Contractor shall make a point repair excavation to uncover and remove or repair the obstruction. Such excavation shall be approved in writing by the City's representative prior to the commencement of the work and shall be considered as a separate pay item.

The Contractor shall make every effort to maintain service usage throughout the duration of the project. In the event that a service will be temporarily out of service, the maximum amount of time of no service shall be 16 hours for any property served by the sewer. The Contractor shall be required to notify the City and all affected properties whose service laterals will be out of commission and to advise against water usage until the sewer main is back in service. Such notification shall be provided to the Utility Department at least one week prior to service disconnecting.

A public notification program shall be implemented, and shall as a minimum, require the Contractor to be responsible for contacting each home or business connected to the sanitary sewer and informing them of the work to be conducted, and when the sewer will be off-line. The Contractor shall also provide the following:

A. Written notice to be delivered to each home or business describing the work, schedule, how it affects them, and a local telephone number of the Contractor they can call to discuss the project or any problems that could arise.

B. Personal contact and attempted written notice the day prior to the beginning of work being conducted on the section relative to the residents affected.

C. Personal contact with any home or business that cannot be reconnected within the time stated in the written notice.

21.11 QUALITY ASSURANCE PROCEDURES

21.11.01 Material

A. All material testing shall be performed and certified by a registered independent, third-party laboratory.

B. Wall thickness of samples shall be determined as described in ASTM F1216, Section 8 or ASTM F1743, Section 8. The minimum wall thickness at any point shall not be less than 87.5% of the design thickness as calculated in Section 17.08 of this Specification.

C. The Contractor shall obtain, prepare and store appropriate samples for all liners installed under this Contract. The Contractor shall provide samples of the cured lining material from the actual installed liner at a minimum of one set per each liner insertion setup. The preparation and testing of these samples shall be in accordance ASTM F1216, Section 8. The Contractor shall coordinate the required testing of the samples with the laboratory, and the City will pay for the initial testing of these samples in accordance with the pay item. The Contractor shall pay for the cost of retests made necessary by the failure of the samples to meet the specified requirements.

D. The cured liner shall be sampled and tested for flexural strength and flexural modulus (short term). Flexural strength and modulus shall be tested in accordance with the requirements of ASTM 0790. The liner shall be in compliance with the physical properties stated in this Specification.

E. Corrosion resistance requirements shall be as stated in ASTM F1216, Section X2, Chemical Resistance Tests.

21.11.02 Field

A. Up to 10 percent of the installed CIPP Main Liners may be tested for exfiltration in accordance with ASTM F1216, Section 8.2 prior to service lateral reconnections. Testing shall exclude maximum pressure limitation (4.3 psi) at lowest end. Leakage testing shall be performed after

all dry and non-bondable hoses and tubes are completely removed from the liner. If the liner fails the test, Contractor shall repair or replace liner as required until the tested segment passes.

B. After completion of the installation of Main Liners, service reconnections, and finish work at the manholes, the lined pipe and adjacent manholes shall be televised by the Contractor at his expense, with a color CCTV inspection tilt-head camera recorded in digital format, as required by these Specifications. Pre-installation and post-rehabilitation inspections shall either be recorded on the same media or shall be referenced, if recorded on separate media. Acceptance of the Work shall be based on Engineer's review of the CCTV inspection. Post-rehabilitation CCTV inspection shall not be performed in conjunction with cleaning operations and the liner wall shall be as dry as practical during this inspection (no dripping or splashing). All CCTV inspections delivered to the City shall be in accordance with the Technical Specifications.

END OF SECTION

SECTION 23 – FIBERGLASS WET WELL OR MANHOLE LINER

23.01 GENERAL

Fiberglass reinforced polyester wet wells shall be manufactured from commercial grade polyester resin or vinyl ester resin, with fiberglass reinforcements. The resin system shall be suitable for atmospheres containing hydrogen sulfide and dilute sulfuric acid as well as other gases associated with the wastewater collection systems. The manhole liner or fiberglass wet well shall be a one-piece unit manufactured to meet or exceed all specifications of A.S.T.M. D-3753 latest edition as manufactured by L.F. Manufacturing, Inc., Giddings, Texas, or an approved equal. Section 37 “Wastewater Structure Rehabilitation” contains additional information about fiberglass liners and will govern over this section in the event of a conflict.

23.02 MATERIALS

A. RESIN:
The resins used shall be a commercial grade unsaturated polyester resin.

B. REINFORCING MATERIALS:
The reinforcing materials shall be commercial Grade “E” type glass in the form of mat, continuous roving, chopped roving, roving fabric, or a combination of the above, having a coupling agent that will provide a suitable bond between the glass reinforcement and the resin.

20.02.01 FIBERGLASS WET WELL MATERIALS

A. SURFACING MATERIALS
If reinforcing materials is used on the surface exposed to the contained substance, it shall be a commercial grade chemical-resistant glass that will provide a suitable bond with the resin and leave a resin rich surface.

B. FILLERS AND ADDITIVES
Fillers, when used, shall be inert to the environment and wet well construction. Additives, such as thixotropic agents, catalysts, promoters, etc., may be added as required by the specific manufacturing process to be used. The resulting reinforced plastic material must meet the requirement of this specification.

20.02.02 FRP MANHOLE LINER MATERIALS

A. INTERIOR SURFACING MATERIAL
The inner surface exposed to the chemical environment shall be a resin-rich layer of 0.010 to 0.020 inch thick. The inner surface layer exposed to the corrosive environment shall be followed with a minimum of two passes of chopped roving of minimum length 0.5 inch (13 mm) to maximum length of 2.0 inch (50.8 mm) and shall be applied uniformly to an equivalent weight of 3 oz/ft. Each pass of chopped roving shall be well rolled prior to the application of additional reinforcement. The combined thickness of the inner surface and interior layer shall not be less than 0.10 inch (2.5 mm).

B. WALL CONSTRUCTION PROCEDURE:
After inner layer has been applied the manhole liner wall shall be constructed with chop and continuous strand filament wound manufacturing process which insures continuous reinforcement and uniform strength and composition. The cone section, if produced separately, shall be affixed to the barrel section at the factory with resin-glass reinforced joint resulting in a one piece unit. Seams shall be fiberglassed on the inside and the outside using the same glass-resin jointing procedure. Field joints shall not be acceptable by anyone except the manufacturer.

C. EXTERIOR SURFACE:
For a UV inhibitor the resin on the exterior surface of the manhole liner shall have gray pigment added for a minimum thickness .125 inches

D. FILLERS AND ADDITIVES:
Fillers, when used, shall be inert to the environment and manhole construction. Sand shall not be accepted as an approved filler. Additives, such as thixotropic agents, catalysts, promoters, etc., may be added as required by the specific manufacturing process to be used to meet the requirements of this standard. The resulting reinforced-plastic material must meet the requirements of this specification.

23.03 WET WELL FABRICATION

A. EXTERIOR SURFACE:
The exterior surface shall be relatively smooth with no sharp projections. Handwork finish is acceptable if enough resin is present to eliminate fiber show. The exterior surface shall be free of blisters larger than ½ inch in diameter, delamination and fiber show.

B. INTERIOR SURFACE:

The interior surface shall be resin rich with no exposed fibers. The surface shall be free of grazing, delamination, blisters larger than ½ inch in diameter, and wrinkles of 1/8 inch or greater in depth. Surface pits shall be permitted up to 6 square feet if they are less than ¾ inch in diameter and less than 1/16 inch deep.

C. FIBERGLASS REINFORCED BOTTOM:

The bottom to be fabricated using fiberglass material as stated in Section 20.02. Material and installation to meet all physical requirements as per Section 20.05. Bottom to be attached to wet well pipe with fiberglass layup to comply with A.S.T.M.-D3299 specifications. When reinforcement is necessary for strength, the reinforcement shall be completely enclosed with a fiberglass layup per A.S.T.M.-D3299.

D. FIBERGLASS REINFORCED TOP:

The fiberglass wet well top shall be fabricated using fiberglass material as stated in Section 20.02. Material and installation to meet all physical requirements as per Section 20.05. Top to be attached to wet well pipe with fiberglass layup to comply with A.S.T.M.-D3299 specifications.

When reinforcement is necessary for strength, the reinforcement shall be completely enclosed with a fiberglass layup per A.S.T.M.-D3299.

E. INSTALLATION OF STUBOUTS:

Effluent, service, or discharge lines made be factory installed. Approved methods are PVC sewer pipe, Inserta-Tee fittings, or Kor-N-Seal boots. Installation of stubouts to be fiberglass layup to comply with A.S.T.M.-D3299 specifications.

F. DEFECTS NOT PERMITTED:

A. Exposed fibers: glass fibers not wet out with resin
B. Resin runs: runs of resin and sand on the surface.
C. Dry areas: areas with glass not wet out with resin.
D. Delamination: separation in the laminate.
E. Blisters: light colored areas larger than ½ inch in diameter.
F. Crazing: cracks caused by sharp objects.
G. Pits of Voids: air pockets.
H. Wrinkles: smooth irregularities in the surface
I. Sharp projection: fiber or resin projections necessitating gloves for handling.

23.04 FRP MANHOLE LINER DESIGN

A. INTERIOR ACCESS:

All manhole liners shall be designed so that a ladder or step system can be supported by the installed manhole liner.

B. MANWAY REDUCER:

Manway reducers will be concentric with respect to the larger portion of the manhole liner diameters through 60 inches. Larger manhole liners may have concentric or eccentric manway reducer openings.

C. COVER AND RING SUPPORT:

The manhole liner shall provide an area for which grade rings or brick can be installed to accept a typical metal ring and cover and have the strength to support a traffic load without damage to the manhole liner.

D. EXTERIOR SURFACE:

The exterior surface shall be relatively smooth with no sharp projections. Hand-work finish is acceptable if enough resin is present to eliminate fiber show. The exterior surface shall be free of blisters larger than 0.5 inch in diameter, delamination or fiber show.

E. INTERIOR SURFACE:

The interior surface shall be resin rich with no exposed fibers. The surface shall be free of crazing, delamination, blisters larger than 0.5 inch in diameter and wrinkles of 0.125 inch or greater in depth. Surface pits shall be permitted if they are less than 0.75 inch in diameter and less than 0.0625 inch deep. Voids that cannot be broken with finger pressure and that are entirely below the resin surface shall be permitted if they are less than 0.5 inch in diameter and less than 0.0625 inch thick.

F. REPAIRS:

Any manhole repair is subject to meet all requirements of this specification.

G. MANHOLE LENGTH:

Manhole lengths shall be in 6-inch increments +/- 2 inches.

H. DIAMETER TOLERANCE:

Tolerance of inside diameter shall be +/- 1% of required manhole diameter.

23.05 PHYSICAL REQUIREMENTS

20.05.01 LOAD RATING

The complete wet well or manhole liner shall have a minimum dynamic-load rating of 16,000 ft-lbs when tested in accordance with A.S.T.M. 3753 Section 8. To establish this rating, the complete wet well or liner shall not leak, crack, or suffer other damage when load tested to 40,000 lbs and shall not deflect vertically downward more than ¼ inch at the point of load application when loaded to 24,000 lbs.

20.05.02 STIFFNESS

The wet well or manhole liner cylinder shall have a minimum pipe-stiffness values shown in the table below when tested in accordance with A.S.T.M. 3753 Section 8.

STIFFNESS REQUIREMENTS

FIBERGLASS WET WELL		MANHOLE LINER	
LENGTH-FT	F/AY – PSI	LENGTH-FT	F/AY – PSI
10 - 20	2.01	3 – 6.5	0.75
21 - 30	3.02	7 – 12.5	1.26
31 - 40	5.20	13 - 20.5	2.01

PHYSICAL PROPERTIES:	FIBERGLASS WET WELL		MANHOLE LINER	
	HOOP DIRECTION	AXIAL DIRECTION	HOOP DIRECTION	AXIAL DIRECTION
a. Tensile Strength (psi)	18,000	5,000	18,000	5,000
b. Tensile Modules (psi)	0.8 x 10^6	0.7 x 10^6	0.6 x 10^6	0.7 x 10^6
c. Flexural Strength (psi)	26,000	4,500	26,000	4,500
d. Flexural Modules (psi)	-	-	1.4 x 10^6	0.7 x 10^6
(no ribs – 48”, 60”, 72”)	1.4 x 10^6	0.7 x 10^6	-	-

(with ribs – 96", 144")	0.7 x 10^6	0.7 x 10^6	-	-
e. Compressive (psi)	-	-	18,000	5,000

23.06 TEST METHODS

Tests shall be performed as specified in A.S.T.M. 3753 latest edition, Section 8.

23.07 INSTALLATION

23.07.01 FIBERGLASS WET WELL INSTALLATION

A. EXCAVATION:

A. General:

The limit of excavation shall be such to allow for placing and removing forms, installing sheeting, shoring, bracing, etc. The Contractor shall pile excavated material in a manner that will not endanger the work and will avoid obstructing sidewalks, driveways, power poles, etc. Drainage shall be kept clear.

B. Vertical Sides:

When necessary to protect existing or proposed structures or other improvements, the Contractor shall maintain vertical sides of the excavation. The limit shall not exceed three feet outside the footing on a vertical plane parallel to the footing except where specifically approved otherwise by the Engineer. The Contractor shall provide and install any sheeting, shoring, and bracing as necessary to provide a safe work area as required to protect workmen, structures, equipment, power poles, etc. The Contractor shall be responsible for the design and adequacy of all sheeting, shoring, and bracing. The sheeting, shoring, and bracing shall be removed as the excavation is backfilled in such a manner as to prevent injurious caving.

C. Sloping sides:

Where sufficient space is available, the Contractor shall be allowed to back slope the sides of the excavation. The back slope shall be such that the excavation shall be safe from caving. The type of material being excavated shall govern the back slope used, but in any case, the back slope shall be no steeper than 1 foot horizontal to 1 foot vertical.

D. Dewatering:

The Contractor shall keep the excavation free from water by use of cofferdams, bailing, pumping, well pointing, or any combination as the particular situation may warrant. All dewatering devices shall be installed in such a manner as to provide clearance for construction, removal of forms, and inspection of exterior of form work. It is the intent of these specifications that the foundation be placed on a firm dry bed. The foundation bed shall be kept in a dewatered condition a sufficient period of time to insure the safety of the structure. All dewatering methods and procedures are subject to the review and

acceptance of the Engineer. The excavation shall be protected from excessive rainfall, drainage and drying. It is the intent of these specifications that the Contractor provide a relatively smooth, firm foundation bed for footings and slabs that bear directly on the undisturbed earth without additional cost to the Owner, regardless of the soil conditions encountered. The contractor shall pile excavated material in a manner that will not endanger the work.

E. Unauthorized Over Excavation:

Excavation for slabs, footings, etc., that bear on earth shall not be carried below the elevation shown on the drawings. In the event the excavation is carried on below the indicated elevation, the Contractor shall bring the slab, footing, etc., to the required grade by filling with concrete having a minimum compressive strength of at least 3,000 psi at 28 days.

B. OPEN BOTTOM WETWELL INSTALLATION:

Bottom of excavation should be compacted to 95% Standard Proctor Density. Pour reinforced concrete base one foot deep and at least two feet larger than the fiberglass wet well outside diameter. As soon as the concrete has set-up enough to support the fiberglass wet well, lower the wet well into place. Pour a minimum of one foot of reinforced concrete on the inside, also a minimum of one foot deep and two feet from the fiberglass wet well wall on the outside of the wet well. Insert ram neck type sealant on the outside of fiberglass wet well around the bottom where the fiberglass and concrete come together.

C. CUTOUTS:

Cutouts in wet well wall should be made with proper cutting tools, such as jig saw or hole saw. Do not use axe or other impact-type tools.

D. INSTALLATION OF SEWER PIPE:

A. Type1: Make the cutout in the wet well wall, the outside diameter of pipe, plus 1/2 inch maximum. Slip pipe into position. Apply industrial grade silicone around the pipe next to the wet well wall cutout on the inside and on the outside. Cover the outside siliconed area with epoxy grout and backfill.

B. Type 2: Make the cutout in the wet well wall, the outside diameter of pipe, plus 1/2 inch maximum. Grind the outside surface of the pipe and both the inside and the outside surfaces of the cutout in the wet well wall. (Apply a priming agent to any PVC pipe that might be used before fiberglass lay-up.) Insert the pipe through the cutout in the wall of the wet well. Apply fiberglass putty to the inside and the outside of the wet well wall cutout, filling openings between pipe and cutout. Make a good radius for the fiberglass lay-up. After putty has set-up, fiberglass the pipe into place. Use one layer of woven roving sandwiched between two layers of fiberglass mat. Allow fiberglass to completely set-up before backfilling. Fiberglass layup method to comply with A.S.T.M.-D3299 specifications.

C. Type 3: Install Insert-A-Tee type fitting per manufacturers instruction. (Fowler Mfg. Co., P.O. Box 767, Hillsboro, Or. 97123. PH. 503-359-5417) or approved equal.

E. CLOSED BOTTOM WET WELL INSTALLATION:

Bottom of excavation should be compacted to 95% Standard Proctor Density. Wet wells with diameters up to 54 inches and depths no greater than 12 feet, may be placed on a base of 6 inches of crushed stone. Wet wells with depths greater than 12' feet, should have a poured reinforced concrete base at least one foot deep and at least two feet larger than fiberglass wet well outside diameter. The fiberglass wet well shall be lowered into the wet concrete and brought to plumb. Pour reinforced concrete over the anti-flotation flange. The concrete shall be a minimum of one foot deep and two feet from outside wall of the wet well. More concrete may be required in high water table areas.

F. INTERNAL BOTTOM RIBS:

Wet wells with internal bottom stiffening ribs will require that concrete be poured on the inside of the wet well to a depth equal to that of the stiffening ribs. This is typically 4 – 6 inches.

G. FIBERGLASS WET WELL TOP:

The fiberglass top may have stubouts installed or may have a raised fiberglass collar around the hatch opening. The fiberglass top has been designed to withstand the weight of a concrete reinforced slab to be installed over it.

H. BACKFILL:

A. Backfill Material: Unless shown otherwise on the drawings, sand or crushed stone shall be used for backfill around the wet well for a distance of two feet from the outside surface and extending from the bottom of the excavation to the bottom of the top slab. Suitable material chosen from the excavation may be used for the remainder of the backfill. The material chosen shall be free of large lumps or clods, which will not readily break down under compaction. This material will be subject to review and acceptance of the Engineer. Backfill material shall be free of vegetation or other extraneous material. Excavated materials which are to be used for fill or backfill may be stockpiled on the site. Location of stockpiles shall be approved by the City. Top soil should be stockpiled separately and used for finish grading around the structure.

B. Schedule of Backfilling: The Contractor may begin backfilling of wet well as soon as the concrete has been allowed to cure and the forms removed.

C. Backfill Lifts: Backfill shall be placed in layers of not more than 12 loose measure inches and mechanically tamped to at least 95% Standard Proctor Density. Flooding will not be permitted. Backfill shall be placed in such a manner as to prevent any wedging action against the structure.

I. TOP SLAB SUPPORT:

When installing a fiberglass wet well without a fiberglass top you should pour a reinforced concrete slab support a minimum of two feet outside of fiberglass wet well wall and a minimum of six inches thick. The slab shall be specified and designed by engineer or precast manufacturer engaged by contractor per Contract Documents.

23.07.02 FRP MANHOLE LINER INSTALLATION

Unless shown otherwise on drawings and approved by the engineer, concrete grout shall be used for backfill between the old manhole and the new fiberglass manhole liner. The backfill around the excavated reducer section shall be stabilized sand or crushed stone. The material chosen shall be free of large lumps or clods which will not readily break down under compaction. This material will be subject to approval by the engineer.

The concrete grout backfill shall be poured in layers of not more than 12 inches in even lifts. The reducer section to be backfilled in 12-inch lifts evenly and compacted to 95% Standard Proctor Density.

23.08 SHIPPING AND HANDLING

23.08.01 FIBERGLASS WET WELL SHIPPING AND HANDLING

Do not drop or impact the wet well. Wet wells shall be chocked if stored horizontally. If wet wells must be moved by rolling, the ground transversed shall be smooth and free of rocks, debris, etc. FRP wet wells may be lifted by the installation of two lifting lugs as specified by the manufacturer on the outside surface near the top or by a sling or “choker” connection around the center. Use of chains or cables in contact with the wet well surface is prohibited. Wet wells may be lifted horizontally using one support point.

23.08.02 FRP MANHOLE LINER SHIPPING AND HANDLING

Do not drop or impact the fiberglass manhole liner. Fiberglass manhole liner may be lifted by inserting a 4″x 4″x 30″ timber into the top of manhole with cable attached or by a sling or “choker” connection around center of manhole, lift as required. Use of chains or cables in contact with the manhole surface is prohibited.

END OF SECTION

SECTION 33 – FRAC-OUT PLAN FOR SUBAQUEOUS CROSSINGS

33.01 GENERAL

A. The Contractor must implement and adhere to the Best Management Practices (BMPs) and Frac-Out Plan as outlined in this Specification Section for projects including subaqueous transmission lines installed, repaired, or replaced using horizontal directional drilling and permitted through the US Army Corps of Engineers (USACE).

B. The Contractor shall furnish all necessary equipment and provide the necessary labor to adhere to the BMPs and Frac-Out Plan procedures.

33.02 BEST MANAGEMENT PRACTICES (BMPs)

The Contractor will implement the following Best Management Practices (BMPs) to minimize the potential for adverse environmental impacts during horizontal directional drilling activities:

A. BMPs for erosion control within the staging area shall be implemented and maintained at all times during the drilling and back-reaming operations to prevent siltation and turbid discharges in excess of State Water Quality Standards pursuant to Rule 62-302, F.A.C. Methods shall include, but are not limited to the immediate placement of turbidity containment devices such as turbidity screen, silt containment fence, hay bales, and earthen berms, etc. to contain the drilling mud. Earthen berms shall not be utilized as to impact wetlands or other surface waters.

33.03 FRAC-OUT PLAN

A. Measures used to prevent frac-out during the HDD operation shall include maintaining the proper boring depth for the soil conditions along the drilling route as well as proper management of drilling fluids circulation pressure. The minimum distance between the top of the over-ream hole and surface shall be maintained according to the Contract Documents. This distance should be sufficient to prevent frac-out when drilling with controlled and monitored drill fluid pressure.

B. Non-toxic fluorescent dyes will be added to the drilling lubricant as a method for monitoring bentonite releases in the underwater portions of this drilling. Details of the fluorometry monitoring method shall be submitted to the USACE prior to the pre-construction meeting

C. Drilling fluid returns (flow of drilling fluids to the HDD entry/exit pit location) will be continuously monitored visually during the installation.

D. The volume and circulation pressure of drilling fluid in the HDD bore and over-ream shall be monitored at all times during the HDD operation. The HDD drill rig operator will monitor the downhole annular pressure at all times. Should a drop in volume occur, immediately conduct a visual inspection of both terrestrial and pavement portions of the HDD corridor. A visual inspection of all project area and adjacent waterbodies, and storm and sanitary sewer systems shall also be conducted.

E. Should the detection of dye or a drop in volume of bentonite occur, the Contractor will follow the Release Procedures outlined below.

F. All drilling fluids associated with the HDD operation shall be contained onsite. The volume of the drilling fluids recirculation/solids settlement pit and onsite storage/frac tanks and watertight roll-off containers shall be submitted for review by the Engineer. As required during the HDD process, screened solids and surplus drilling fluid will be removed and disposed of off the project site at a location of the HDD Contractor's choice in accordance with applicable regulations. At the conclusion of all drilling operations, drilling fluid remaining in the pit will be settled, removed completely from the pit, and hauled to a disposal site of the HDD Contractor's choice in accordance with applicable regulations within 48 hours of the pipe pull-in. After back-reaming, drilling materials will be removed from the inside of the pipeline by pigging it from the exit point towards the rig area. The paved and/or vegetated surface of the disturbed pit area shall be restored according the Contract Documents.

G. At all times, adequate protection will be taken to avoid impacts to pavement, structures, and Aquatic Preserve/Outstanding Florida Waters and contiguous wetlands. This shall include, but is not limited to halting of construction/drilling and/or placement of turbidity containment devices in accordance with the applicable regulations.

H. A pump tanker or vactor truck shall be onsite and available at all times. The Contractor shall demonstrate the contracted availability of additional pump tankers and/or vactor trucks if needed for surplus or frac-out drilling fluids.

I. A spill kit (i.e., absorbent pads/brooms, shovels, goggles, gloves) shall be onsite and available at all times.

33.04 RELEASE PROCEDURE

A. If a frac-out is confirmed, all construction activity contributing to the frac-out shall cease immediately.

B. If the return drilling fluid is less than the projected amount to be recovered, divers shall begin a search for the missing material within 1 hour of potential release if the drilling takes place under a body of water. Once the drilling fluid and frac-out is located, then the drilling mud containment plan shall be immediately implemented.

C. The Contractor shall notify the City upon confirmation of the occurrence. The notification shall include the time of the frac-out, location and impact on pavement and improvements, and the environmental conditions of the impacted area.

D. If a frac-out has occurred during construction activities, the Contractor shall coordinate with the City in order to notify the USACE of Engineers, within 24 hours of the occurrence. The notification shall include the time of the frac-out, the response time of the underwater diver, and the environmental conditions of the affected area.

F. If the loss of drilling fluid or excess fluid pumping/recirculation pressure results in the heaving and/or settlement of pavement, curb, sidewalk and/or other infrastructure, the HDD Contractor shall immediately mobilize all equipment, manpower and devices to recover the drilling fluid, relieve the fluid pressure, stop any heaving or settlement of infrastructure and protect the public. The HDD Contractor shall prepare a remediation plan to repair, replace, or restore the affected infrastructure in accordance with the governing jurisdiction's standards, reviewed for approval prior to implementation.

G. Before continuing with the HDD operation, the HDD Contractor shall prepare and submit for approval a revised plan for successful completion of the required project. The plan shall identify the manpower, equipment, drilling fluid, additives, pump pressures, original bore hole sealing, and bore path modifications that may be required.

33.05 DRILLING MUD CONTAINMENT PLAN

A. Should the release of drilling materials occur on land, a sediment fence shall be constructed around the site and the material shall be removed by vacuum truck.

B. Should the release of drilling materials occur in-water, clean-up with a vacuum system shall commence within 24 hours.

C. The scientist/biologist underwater divers will guide the suction hose of the pump to minimize both the removal of natural bottom material and the disturbance of any existing vegetation.

D. Any escaped drilling lubricant must be pumped into filter bags or directly into a vactor truck.

E. A barge company will be contacted to transport a vactor truck should it be needed to respond "in-water."

F. Once the spill is contained, the escaped drilling lubricant shall be properly disposed of in an approved upland disposal site.

G. Clean-up with a vacuum system shall commence within 24 hours.

H. After containment/recovery of the drilling material/resources, the HDD Contractor shall prepare a detailed written report to be submitted to the City and USACE, within 10 business days, that summarizes the incident, including the following:

1. Details on the release event, including an estimate of the bentonite released;
2. The location and time of release;
3. The size of the area impacted, and the success of the clean-up action;
4. Name, firm, address and telephone number of HDD Contractor reporting;
5. Photos and/or digital recording of frac-out area and impacts;
6. Date and Time;
7. How the release occurred;
8. The type of activity that was occurring around the area of the inadvertent return;

9. Description of any sensitive areas and their location in relation to the inadvertent return;
10. Description of the methods used to clean up or secure the site;
11. Changes to the drilling fluid properties or drilling process (if any); and
12. Mitigation of any impacted public utility infrastructure and water bodies from the frac-out

END OF SECTION

SECTION 34 –MANHOLE INSPECTION

34.01 SCOPE OF SERVICES

A. The Contractor shall perform visual inspections of the existing manholes and record any defect discovered. The visual inspection shall include surface photo, manhole cover and frame, chimney, walls, invert, and all appurtenances.

B. The nature of the inspections shall be to verify the physical condition of the manhole and to provide a permanent record of the existing condition as it relates to dimensions, materials, obstructions, breakage, connections, and deterioration. Inspections may be performed by personnel entry or from the surface utilizing pole mounted camera equipment to visually inspect the chimney, cone, wall, bench, pipe seals and invert conditions, and conditions of connecting pipes.

C. All City assets will be identified using the established facility identification code (FID) for all inspection reports, geographical exhibits, data sets and asset management tasks. Assets may include, but not be limited to, manholes, clean outs, gravity mains, force mains, air release valves, and conflict structures. Asset FIDs will be provided to the Contractor prior to the start of inspection. Failure to utilize the FID could result in additional inspection at the Contractors expense.

34.02 REQUIREMENTS

A. The Contractor shall inspect the manhole surroundings and the manhole interior using visual means and a digital camera for documentation.

B. All inspections shall be recorded.

C. All inspection forms shall be scanned and submitted as .PDF files.

D. All inspection data shall be entered into a NASSCO Manhole Assessment Certification Program (MACP) compliant database per Specification Section 20 “CCTV Inspection and Pipe Cleaning”.

E. The inspection photographs, report documents, and inspection database shall be in accordance with the specifications and NASSCO MACP.

F. Contractor shall maintain a copy of all report materials. The Contractor shall provide comments as necessary to fully describe the existing condition of the manhole on the inspection forms.

G. Contractor shall be responsible for modifications to equipment and/or inspection procedures to achieve City report requirements.

H. No Work shall commence prior to approval of the submitted materials by the City. Once accepted, the report materials shall serve as a standard for the remaining work.

34.03 QUALITY ASSURANCE

A. Use of PACP/MACP certified technicians to review/document defects in the office (post process) is acceptable.

B. The CCTV Contractor must have an internal quality assurance/quality control (QA/QC) program in place and all inspection data shall be subjected to the procedures prior to submittal to the City. The City will perform QA/QC audits on submitted data.

A QA/QC shall be performed by NASSCO MACP and PACP certified personnel.

34.04 SHOP DRAWINGS AND SUBMITTALS

A. Submittals shall be submitted to the City for review and acceptance prior to construction in accordance with Specification Section 03 -Submittals.

B. The above deliverables shall be submitted to the City for approval.

C. The manhole inspection reports and database shall be in accordance with the specifications and NASSCO MACP.

34.05 NOTIFICATION

The Contractor shall notify the City a minimum of 48-hours prior to performing any inspection work. The City may be present during part or all of the inspections. No payment will be made for inspections performed without proper schedule notification

34.06 EXECUTION

A. The inspection crew shall mobilize to the site of the manhole inspection and immediately establish traffic control measures per City of St. Pete Beach and Florida Department of Transportation (FDOT) requirements as well as any measures required to protect pedestrians. The crew shall inspect each manhole and record required information.

B. All manhole structures shall be located. Metal detectors shall be used to locate buried manholes. Once a buried manhole has been located, it shall be marked with paint and/or flagging, if necessary. All pertinent information available shall be recorded including area photo, address, etc. Contractor shall notify the City weekly with a list of those manholes that could not be fully inspected due to access issues. The City may arrange to have some or all these manholes exposed, or otherwise

made accessible for full inspection. The City will notify Contractor of the status and may authorize re-inspection.

34.07 MANDATORY INSPECTION HEADER INFORMATION

Once the manhole is located, the following mandatory information shall be recorded on the inspection form. Note that the mandatory fields noted below are more inclusive than the MACP requirements. All available information shall be collected and recorded for those manholes that are buried, could not open, surcharged, etc.

1. Manhole Number (City of St. Pete Beach Asset Number)
2. Sheet number
3. Date
4. Time
5. Surveyor's Name
6. Certifications Number
7. Drainage area (tributary Pump Station Number)
8. Location (street number and name)
9. Downstream pipe length (feet)
10. Rim to grade (nearest 0.1 foot)
11. Pre-cleaning method (using approved MACP codes)
12. Location code (using approved MACP codes)
13. Manhole surface type (using approved MACP codes)
14. Potential for runoff (using approved MACP codes)
15. Access point type (using approved MACP codes)
16. Inspection status (using approved MACP codes)
17. Area photo image reference Internal photo image reference

34.08 MANHOLE COMPONENT OBSERVATIONS

The inspection crew shall complete all fields within the manhole component/observation section of the inspection form. The following information shall be collected:

1. Cover type (solid, vented, bolted)
2. Cover size (top surface diameter in inches)
3. Cover material
4. Number of vent holes
5. Cover/Frame fit (cover to frame fit, MACP codes)
6. Cover condition (MACP codes)
7. Cover insert type
8. Cover insert condition
9. Frame condition
10. Frame seal condition
11. Frame offset distance
12. Frame seal inflow
13. Wall material

14. Interior wall coating
15. Wall diameter
16. Bench present
17. Channel installed
18. Additional remarks relevant to the manhole

34.09 MANHOLE INTERIOR INSPECTION

The inspection crew shall determine the types of defects within the manhole, document each defect on the manhole form and take a photograph of each defect. The manhole chimney, cone, wall, bench, and channel shall be inspected for structural integrity, signs of I/I and the presence of roots. All documentation shall follow NASSCO MACP standards. Each defect will be documented on the inspection form with the following information:

1. Defect number
2. Component of manhole containing defect
3. Defect code (using approved MACP codes)
4. Image Reference (using City approved file naming structure)

34.10 CONNECTING PIPE DETAILS

Each pipe entering and exiting the manhole shall be photographed where possible and inspected to determine diameter, pipe material, debris levels, and rim to invert distance (to 0.1-feet). The pipe inspection will include the following information:

1. Pipe photo (using City approved file naming structure)
2. Pipe direction (incoming or outgoing)
3. Pipe clock positions (6:00 position = outgoing)
4. Pipe diameter
5. Pipe material (using PACP codes)
6. Rim to invert distance (measured to nearest 1/10th of a foot)
7. Pipe special condition (drops, force mains, etc. using approved MACP codes)
8. Debris depth
9. Connecting structure number; if manhole or cleanout, service line clock position, stub-out clock position, etc.
10. Pipe seal condition (using approved MACP codes)
11. Pipe seal roots (using approved MACP codes)
12. Observed pipe defects, obstructions, roots, etc. (using PACP codes)

34.11 MANHOLE SKETCH, MAP UPDATE, AND NOTES

The inspection crew shall complete the manhole plan view sketch noting all connecting pipes. Any special observations or notes may be added to the profile sketch on the field form. Influent and effluent lines in each manhole shall be compared to the existing map and corrections noted in the sketch section of the field form.

34.12 NOTIFICATION OF EMERGENCY CONDITIONS

Inspection crews shall immediately notify the City and/or on-site inspector of any defects posing imminent danger to the public (missing lids, covers broken during inspection, sink holes, etc.) and any observed pipe blockages or potential overflow conditions.

34.13 COMPLETION

Once the inspection is complete the field crew shall make certain the ring is clean and does not have any debris preventing a proper cover fit. The manhole lid shall be replaced, and any displaced items moved back into place.

A list of manholes that could not be fully inspected, along with the problem explanation, shall be forwarded to the City weekly throughout the inspection work. If the Contractor has completed accessible inspections, and the City authorizes, then Contractor may be required to re-mobilize at the same unit price and complete the requested inspections. All re-inspections will be at the same contracted unit price. Any map updates shall be consolidated and forwarded to the City with the submitted inspections.

34.14 PHOTOGRAPH REQUIREMENTS

A. During each inspection the following series of photographs shall be taken:

1. Photograph: During the inspection, a photograph shall be taken of the manhole cover showing location within the roadway, shoulder, or easement as appropriate. Photographs shall be taken of any indications of previous overflows such as watermarks and paper or other debris typical of sewer overflows. Surface photographs shall be oriented in the direction of the outgoing pipe to show the pipeline cover and easement condition. The area photographs should show the manhole visible in the foreground where possible. A minimum of 1 area photo is required.
2. Internal Photograph: Take a photograph of the manhole interior in plan view showing the general arrangement of the incoming and outgoing sewers, manhole walls, and other appurtenances. The internal condition photograph shall be oriented with the direction of the outgoing main line flow at the bottom of the photograph (6:00 position). A minimum of 1 internal photograph is required.
3. Manhole Defect Photographs: During manhole inspections digital photographs shall be taken of all defects. Photographs must clearly and accurately show each defect and correspond to defects and photo numbers logged on the manhole inspection form. A minimum of 1 photo for each observed defect is required
4. Connecting Pipe Photographs: The camera should then be pointed into all incoming and outgoing pipes where possible to capture general conditions within the pipes. Any obvious blockages or defects should be noted using

PACP defect codes. A minimum of 1 photo of each incoming or outgoing pipe is required.

B. During inspections manholes shall be free of steam, fog, water vapor, or other conditions that will impact the quality of photographs.

C. All photographs shall adequately capture the manhole conditions and details of defects. Lighting and camera quality shall provide a clear, in-focus picture of the manhole interior, manhole defects, and manhole. The lighting shall provide uniform light free from shadows or hot spots.

D. If larger than 640 x 480 resolution, then photo will be converted to 640 x 480. Photos less than 640 x 480 are not acceptable and converting upward to 640 x 480 is not acceptable. All photographs shall be resized to 640 x 480 resolution to minimize file size.

E. The images shall be kept electronically, copied to a CD, DVD, or external hard drive. Photographs shall be named according to the photograph naming conventions included herein.

F. All digital photographs shall be referenced on the manhole inspection form and electronic database.

G. All digital photographs shall be renamed in accordance with a photo file naming convention. An example is shown below:

1. Area Photo = Manhole ID, A, Photo Number, jpg
   Example: 3965002A0001.jpg
   Manhole: 39650002
   A=Area Photo
   Photo No.0001
2. Internal Photo = Manhole ID, I, Photo Number, jpg
   Example: 3965002I0001.jpg
   Manhole: 3965002
   I=Internal Photo
   Photo No.0001
3. Manhole Defect Photo = Manhole ID, M, Photo Number, jpg
   Example: 3965002M0015
   Manhole: 3965002
   M=Manhole Defect Photo
   Photo No. 0015
4. Pipe Photo = Manhole ID, P, Photo Number, jpg
   Example: 3965002P0002.jpg
   Manhole: 3965002
   P=Pipe Photo
   Photo No. 0002

34.15 MANHOLE NUMBERING, FORMS, AND DEFECT CODES

The Contractor shall use the City manhole numbering system when performing the inspections for this Project. Manhole numbers will be provided by the City. Defect codes shall conform to those specified in the NASSCO MACP specification.

All City assets will be identified using the established facility identification code (FID) for all inspection reports, geographical exhibits, data sets and asset management tasks. Assets may include, but not be limited to, manholes, clean outs, gravity mains, force mains, air release valves, and conflict structures. Asset FIDs will be provided to the Contractor prior to the start of inspection. Failure to utilize the FID could result in additional inspection at the Contractors expense.

34.16 SITE RESTORATION

After inspecting manholes in an area, the work site shall be cleaned and restored to pre-Work conditions. If manhole is buried and exposed, then restore site by placing material back over exposed manhole. No re-sodding is anticipated or included in the pricing.

34.17 DELIVERABLES

The Contractor will be required to submit the following deliverables at the completion of inspection.

A. During each inspection the following series of photographs shall be taken:
   1. Inspection session header information (see required fields above)
   2. Component observations
   3. Manhole inspection details including defects observed and photo image references
   4. Connecting pipe details
   5. Manhole plan view sketch

B. Marked up field maps detailing map corrections and/or discrepancies noted during inspection.

C. Inspection digital photograph in City approved format and resolution and assigned file names in accordance with the City standard during each inspection the following series of photographs shall be taken.

D. All information and reports shall be exported to the electronic database described in technical specification Section 34.02.

END OF SECTION

THIS PAGE INTENTIONALLY LEFT BLANK

SECTION 35 – CHEMICAL SEALING OF HOST PIPE AND SERVICE CONENCTIONS

35.01 GENERAL

The Work in this section includes furnishing all labor, materials, tools, and equipment for reducing infiltration within the host pipe and service connections to an acceptable level prior to liner installation to ensure that placement and curing is not adversely affected by the presence of excessive infiltration and seal annular space between liners and host pipes at service lateral connections. Accordingly, the Engineer will base acceptance of this portion of the Work on the reduction of infiltration at host pipe joints and other defects to a level that will insure completion liner installation in accordance with these specifications.

Contractor shall furnish all labor, materials, equipment, and incidentals to seal active infiltration at host pipe joints, service lateral connections, and other defects as directed. Sealing shall be from inside the host pipe using a device equipped with a pan and tilt camera and inflatable packer as described herein.

35.02 PRODUCTS

A. Sealing Materials

1. The sealing compound shall be Acrylic base gel -Avanti AV-100, AV-1 18, Urethane base gel — Avanti AV-350 or Acrylate base gel- Deneff AC-400 or approved equal and shall be suitable for use in domestic wastewater collection systems. Handling, formulation and storage of the sealing gel compound shall be in strict conformance with the manufacturer's recommendations. The uncured gel shall be delivered to the site in unopened containers, with the date of manufacture clearly indicated, no uncured gel manufactured more than six months prior to the date of application shall be utilized. Residual sealing materials shall be removed from the wastewater collection system after injection to ensure no flow reductions, restriction or blockage occur.

2. Icoset additive shall be added to the sealing compound for gel strengthening. The quantity of Icoset additive will be according to the manufacturer recommendation. The sealing compound admixture shall be adjusted to meet specified viscosity and reaction time.

35.03 SUBMITTALS

A. The Contractor shall submit the following to the Engineer in accordance with Specification Section 03 - Submittals

1. Gel compounds
2. Installation equipment

35.04 EQUIPMENT

A. General

1. Sealing equipment shall consist of two separate pumping systems capable of supplying an uninterrupted flow of sealing materials to completely fill the voids. Pumps, fittings and hoses shall be designed to transport a high viscosity material and shall not be affected by acetone or ketone solvents.

2. Sealing materials shall pass from the pumping system through instant reading, controlled flow meters and then through a dual hose system into the sealing device. The device (referred to hereafter as a packer) shall be a cylindrical case of a size less than pipe size, with the cables at either and used to pull it through the host pipe.

3. Generally, the equipment shall be capable of performing the specified operations in pipes where flows do not exceed 25 percent without resorting to any method of flow control.

4. Air impervious inflatable sleeves shall be mounted over the cylinder with the ends of the sleeve sealed to the ends of the casting. The sleeves shall be so constructed that they can be pneumatically expanded from the center to both ends. The center portion of the sleeve shall be sealed to the casing by a broad confining band. When the packer is inflated. Two widely spaced annular bladders shall be formed, each having an elongated shape and producing an annular void around the confined portion of the sleeve. No sealing device which is expanded mechanically nor where the expansion sleeve is not continuous will be allowed in order to prevent damage to the pipe from excessive amounts of sealing pressures or air leakage in the center area of such sealing device. The sleeve shall be a low void packer.

5. Lateral service sealing is accomplished with a "Logiball" lateral packer. The objective of the lateral service packer is to seal the lateral service connection to the main pipe and the first 18-inches of the service lateral.

35.05 EXECUTION

A. General

Sealing shall be by the pressure grout method. Generally, this shall be accomplished by forcing chemical sealing gel materials through a system of pumps and hoses into and through the joints and other defects of the host or lateral pipe from the packer within the pipe. Jetting or driving pipes from the surface that could damage or cause undermining of the wastewater system shall not be allowed.

B. Grout Mixing

1. The Contractor shall mix all grout at the job site in the presence of the Engineer. No grout will be used on the job which has been mixed off site and is in the Contractor’s

tank when the truck drives on site. The Contractor's personnel shall follow the manufacturer's recommendations for the mixing and safety procedures to protect personnel from any adverse effects of the grouting compounds. Powder and additives shall be added and mixed at rates, which will minimize the formation of lumps within grout tanks solutions. All additives will be thoroughly mixed in the grouting component tanks.

2. Prior to application of grout for seal purposes. a pump test will be performed to determine if equal quantities of grout are being pumped from the grout component tanks. Separate containers shall be used to capture the discharges from the grout component tanks. One gallon of grout shall be pumped, and the pump strokes shall be counted. If unequal quantities are being pumped, the Contractor shall take corrective action. The pump test shall be repeated until equal quantities are pumped from the grout tanks.

3. During the grouting process, the Contractor shall monitor the grout component tanks to make sure that equal quantities are being pumped. If unequal levels are noted in the tanks. the pump test shall be repeated as described above. At the beginning of each day, when new batches of grout are mixed and when grout additives are modified to change gel times, a test shall be performed with quantities of grout to determine the grout mixture gel time. The Contractor shall have accurate scale(s) which shall be used to weigh the various non water grout solution components.

C. Host Pipe Sealing by Pressure Grout Method

1. The packer shall be positioned over the area of infiltration by means of a measuring device at the surface and the closed circuit television camera in the pipe. Accurate measurement of the location of the defect to be sealed shall be made, using a portion of the packer as a "Datum" of measurement point or target. Such measurement, target or point shall also be used to obtain necessary measurement for positioning injection area of packer over the area to be sealed.

2. The packer sleeves shall then be pneumatically expanded and shall seal against the inside periphery of the pipe to form a void area at the joint or defect now completely isolated from the remainder of the pipe segment.

3. Into this isolated area sealant materials shall be pumped through the hose system at controlled pressures, which are in excess of groundwater pressures. The pumping, metering and packer shall be integrated so that proportions and quantities of materials and pressures for materials and sealing gel can be instantly monitored and regulated in accordance with the type and size of the leak, percentage of voids being filled, type of soil surrounding the pipe and the rate of flow of the sealing gel solution in relation to the back pressures. These parameters should follow the manufacturer‘s specifications and guidelines.

4. Upon completion of the injection, the television camera shall be moved to a position to observe and inspect the results of the injection. If inspection shows the seal was

not effective, the process shall be repeated until infiltration has been reduced to an acceptable level for liner installation.

5. The packer shall be moved forward, wiping away the excess grout. The excess sealing material removed from the joint by the grouting equipment shall be flushed or pushed forward to the next downstream manhole, removed from the wastewater system and disposed of by the Contractor as specified by disposal of debris resulting from cleaning operations. in no case shall excess grout material be allowed to accumulate and be flushed down the system.

6. it is intended that chemical sealing shall be performed on host pipe immediately prior to the installation of the liner unless otherwise authorized by the Engineer. The Contractor shall notify the City Inspector a minimum of 48 hours prior to commencing Chemical sealing operation. The quantity of grout used shall be verified by the City Inspector.

7. Any part of the wastewater system damaged as a result of the Contractor's operations shall be promptly repaired by, and at the expense of, the Contractor.

8. All activities shall be video inspected during the sealing operation. The video shall be submitted to the Engineer for review and for permanent record. The video inspection shall comply with the requirements of the Technical Specification Section headed "Closed Circuit Television Inspection".

D. Lateral Service Sealing by Pressure Grout Method

1. Air testing laterals shall be accomplished by isolating the area to be tested with the lateral service packer and by applying positive pressure into the isolated void area. A pan and tilt camera shall be used prior to positioning the lateral packer. A sensing unit shall be used for continuous monitoring of the void pressure. This sensing unit shall be located within the void area and will accurately transmit continuous pressure readout to the control panel.

2. Joint testing and grouting for laterals will utilize a "Logiball" type system. The packer ends (end elements, sleeves) shall be expanded using controlled air pressure. The expanded ends shall seal against the inside periphery of the pipe to form a void area at the lateral, now completely isolated from the remainder of the pipe segment. Into this isolated area, sealant materials shall be pumped through the hose system at controlled pressures that are in excess of groundwater pressures. The pressure device shall accurately show psi to the nearest one tenth (0.1) pound and shall instantly respond to and record any change in the void pressure. The joint shall be tested with a gauge pressure of one-half psi per foot of depth of lateral pipe as measured by the deeper of the two manholes between which the lateral is located, or a minimum of 4 psi, whichever is larger. The pumping unit, metering equipment, and the packer device shall be designated so that proportions and quantities of materials can be regulated in accordance with the type and size of the leak being tested or sealed, percentage of voids being filled, type of soil surrounding the pipe and the rate of flow of the sealing gel solution in relation to the back pressures.

These parameters should follow the manufacturer's specifications and guidelines and be reviewed with the Engineer prior to the beginning of any grouting activities.

3. The test procedure will consist of applying air pressure into each isolated void area. To isolate a void, a lateral sealing packer shall be positioned straddling the lateral. The operator shall insert an inflatable inversion tube and inflate the packer ends to isolate the lateral. Once the designated pressure in the isolated void is displayed on the meter of the control panel, the application of air pressure will be stopped and a thirty-second waiting period will commence. The void pressure will be observed during this period. If the void pressure drop is greater than that allowed in the following Air Test Table, the lateral shall be considered to have failed the air test and shall be grouted as specified herein.

Air Test Table

Initial Void Pressure (psi)	Void Pressure After 30 Seconds
12-11	4.8-4.4
11-10	4.4-4.0
10-8	4.0-3.6
9-8	3.6-3.2
8-7	3.2-2.8
7-8	2.8-2.4
6-5	2.4-2.0

4. After completing the air test for each individual lateral specified herein, the lateral packer shall be deflated, with the void pressure meter continuing to display void pressure. If the void pressure does not drop to approximately zero, the equipment shall be adjusted to provide a zero void pressure reading at the monitor.

5. An air pre-test is not required for lateral sealing of service connections in main pipes that have been lined, as lateral sealing is required regardless of air test results. Pre and post-tests, and quantity of grout pumped shall be logged.

6. lateral sealing begins if the lateral does not pass the air test as described above. The lateral packer shall remain in position, thus maintaining the isolated void. Chemical grout sealant will be pressure injected through the lateral packer into the annular space between the inversion tube and the lateral pipe. Under pressure, the grout material shall be then forced out into the soil through leaking joints and pipe defects. The amount of chemical grout pumped is based on the number of pump strokes delivered to each lateral. The number shall be recorded on the sealing log.

7. Upon completion of the lateral sealing procedure, the lateral shall be air tested to verify the sealing of the connection. The air test will be the same as outlined above. If the sealed lateral fails the air test, the grouting procedure shall be repeated at no additional cost to the City. This sequence of air testing, grouting and subsequent air testing shall be repeated until either the lateral is sealed or it is determined that the grout consumption is too high and may result in the blockage of the lateral pipe. The final determination to stop subsequent attempts to seal a lateral will be made jointly

between the Engineer and the Contractor.

8. The Contractor shall verify lateral flow after the successful sealing of each lateral. With the lateral packer in position, the inversion tube shall be retracted and air pressure injected into the lateral. Should a pressure build in the lateral and not drop to zero in a few seconds, the packer will be moved off the connection and the connection shall be viewed with a television camera. With the camera viewing the connection point, an attempt will be made to obtain a water flush by the occupant. If no water is viewed during this procedure, it shall be assumed that the building service connection is blocked with grout and the responsibility to clear the lateral will be the Contractor's at no additional cost to the City.

9. The Contractor shall attach a notification form to the door of each home or building for which laterals have been grouted. This notification to the occupant shall state the following:

   The lateral service connection to (address) _____was grouted on (date) _____

   If any blockage of wastewater flow occurs, please call (emergency number)

   Any blockages that occur as a result of the lateral sealing operations will be cleared by the Contractor.

10. All activities shall be video inspected during both the air testing and sealing operation. The video shall be submitted to the Engineer for review and for permanent record. The video shall display at a minimum the date, manhole numbers, footage to the lateral, and void pressure readout. In addition, the data obtained during this operation shall be recorded on a lateral testing and sealing log provided by the Contractor. The log shall specify conditions of each service lateral sealed, break-in-service connection, lined pipe, etc.

E. Cleanup

Residual sealing materials that extend into the pipe, reduce the pipe diameter, or restrict the flow shall be removed and disposed of by the Contractor at an approved site. Sealed joints shall be left reasonably “flush” with the existing pipe surface. Excessive residual sealing materials in the system shall be cleaned to remove the residual materials.

F. Disposal

Furnish equipment for collection of cleaning solvents used in the cleaning of the sealing equipment. Collected solvents shall be disposed of by an approved solvent recovery process. Disposal of cleaning solvents into the wastewater system or into natural watercourses will be strictly prohibited.

G. Wastewater Flow Controls

When wastewater flows are above the minimum requirements or inspection of the complete periphery of the pipe is necessary to effectively conduct the inspection and sealing operations, one or more of the following methods of flow control shall be used.

1. A plug shall be inserted into the pipe at a manhole upstream from the section to be inspected and/or sealed. The plug shall be so designed that all or any portion of the wastewater flows can be released. During the inspection portion of the operation, flows shall be shutoff or substantially reduced in order to properly inspect the pipe at the invert. After the inspection is complete, flows shall be restored to normal or not more than 1/4 of the pipe diameter during the sealing operation. The Contractor will be responsible for preventing backups and overflows.

2. Where pumping is required, in the opinion of the Engineer, to assure completion of the inspection and sealing work, the Contractor will be required to furnish pumping and bypassing equipment. Refer to the requirements of Specification Section 16 ”Bypass Pumping” or Specification Section 01 "General”.

END OF SECTION

THIS PAGE INTENTIONALLY LEFT BLANK

SECTION 36 – REMOVAL OF PROTRUDING SERVICE CONNECTIONS

36.01 GENERAL

The Work in this section includes furnishing all labor, materials, tools, and equipment for internally removing and sealing protruding service connection taps and excess mortar in wastewater pipe segments scheduled to be rehabilitated.

Remove only those taps that protrude sufficiently as specified herein which are determined to interfere with the pipe rehabilitation. The intent is to remove the minimum number of protruding taps necessary to allow the entire pipe segment to be rehabilitated.

The Contractor shall maintain wastewater flows, including pump around pumping, as required at all times during the performance of this work.

The Contractor shall remove all dirt and debris caused by tap removal. Excess material will not be allowed to enter the wastewater system and carried to downstream reaches.

The Contractor is advised that this Contract requires work in active wastewater collection systems and shall follow all federal, state and local requirements for safety in confined spaces. The Contractor shall conform to all guidelines by the Occupational Safety and Health Administration (OSHA) Federal Regulations; 29 CR Ch. XVII, Section 1910.146 Confined Space Entry.

36.02 PRODUCTS

A. Equipment

1. Protruding taps shall be removed using an internal, remote-controlled intruding pipe remover. Excavation and replacement of protruding taps will not be allowed except under special situations authorized in writing by the Engineer.
2. The equipment shall consist of a main body containing a rotating head assembly equipped with carbide cutting edges. The rotating cutting head shall be driven by air or by electricity and shall be capable of cutting concrete, vitrified clay pipe or other materials commonly used for pipe construction with the exception of cast iron or steel.
3. The equipment shall be self-propelled or pulled through the pipe using winches and a cable set up between adjacent manholes.
4. The equipment shall be positioned using a TV camera in conjunction with the cutter assembly.

36.03 EXECUTION

A. Performance

1. The Contractor shall remove all service taps specified herein that inhibit pipe segment rehabilitation methods. The Contractor is required to remove protruding

taps to the point where they are flush with the inside wall of the pipe.

2. The Contractor shall maintain a complete record of all taps that were removed and furnish two (2) copies of this record at the completion of this work.
    a. The list shall show the Work Order Number, date, street, and pipe segment (by manhole numbers), station and location (left, right and top) of each tap removed.
    b. The list shall also show similar data for any taps that were not successfully removed, as well as the reason why removal was unsuccessful.
3. The Contractor shall protect existing main pipe and service laterals from damage caused by improper use of the equipment. Damage to a main pipe or service lateral caused by removal of a tap shall be repaired immediately, as directed by the Engineer, at the Contractor's expense. Any increase in infiltration at the service connection caused by the Contractor's removal of the protruding tap shall be chemically sealed by the Contractor at no additional cost to the City, in accordance with the Technical Specification Section headed "Chemical Sealing of Service Connections".
4. The Contractor shall remove all dirt and debris from the wastewater system following completion of tap removal.

B. Inspection

1. Contractor shall televise protruding service connection tap prior to removal, recording location and footage to service connection. Following successful completion of removal, Contractor shall perform post-construction television inspection.
2. Post-cleaning and post-rehabilitation television inspections shall be recorded on the same video as specified in the Technical Specifications Section headed "Closed Circuit Television Inspection." Video and data shall be submitted to the Engineer. Video and data shall become the property of the City.

END OF SECTION

SECTION 37 – WASTEWATER STRUCTURE REHABILITATION

37.01 GENERAL

The Work in this section includes furnishing and installing wastewater structure components and coatings for rehabilitation, structural enhancement, and corrosion protection of existing wastewater manholes, for the various diameters listed on the Bid Form. Wastewater structures include, but are not limited to, manholes, vaults, junctions, and wet wells.

The Contractor shall furnish all materials, labor, equipment, and services necessary for wastewater manhole component replacement and coating installation including: traffic control, bypass pumping and/or diversion of wastewater flows, void repair, inflow/infiltration elimination, surface preparation, structure component and coating installation, testing, surface restoration, and cleanup of the Work site.

37.02 GOVERNING STANDARDS

The following Standards are referenced in this section:

ASTM	C 109	"Standard Test Method for Compressive Strength of Hydraulic Cement Mortars"
ASTM	C 157	"Standard Test Method for Length Change of Hardened Hydraulic-Cement, Mortar, and Concrete"
ASTM	C 293	"Standard Test Method for Flexural Strength of Concrete (Using Simple Beam With Center-Point Loading)"
ASTM	C 307	"Standard Test Method for Tensile Strength of Chemical-Resistant Mortar, Grouts, and Monolithic Surfacing"
ASTM	C 308 Modified	"Standard Test Method for Working, Initial Setting, and Service Strength Setting Times of Chemical-Resistant Resin Mortars"
ASTM	C 309	"Standard Specification for Liquid Membrane-Forming Compounds for Curing Concrete"
ASTM	C 321	"Standard Test Method for Bond Strength of Chemical-Resistant Mortars"
ASTM	C 496	"Standard Test Method for Splitting Tensile Strength of Cylindrical Concrete Specimens"
ASTM	C 531	"Standard Test Method for Linear Shrinkage and Coefficient of Thermal Expansion of Chemical-Resistant Mortars, Grouts, Monolithic Surfacing, and Polymer Concretes"

ASTM	C 579	"Standard Test Methods for Compressive Strength of Chemical-Resistant Mortars, Grouts, Monolithic Surfacing and Polymer Concretes"
ASTM	C 596	"Standard Test Method for Drying Shrinkage of Mortar Containing Hydraulic Cement"
ASTM	C 580	"Standard Test Method for Flexural Strength and Modulus of Elasticity of Chemical-Resistant Mortars, Grouts, Monolithic Surfacing, and Polymer Concretes"
ASTM	C 666	"Standard Test Method for Resistance of Concrete to Rapid Freezing and Thawing"
ASTM	C 882	"Standard Test Method for Bond Strength of Epoxy-Resin Systems Used With Concrete By Slant Shear"
ASTM	C 905	"Standard Test Methods for Apparent Density of Chemical-Resistant Mortars, Grouts, Monolithic Surfacing, and Polymer Concretes"
ASTM	D 543	"Resistance of Plastics to Chemical Reagents"
ASTM	D 638	"Tensile Properties of Plastics"
ASTM	D 695	"Compressive Properties of Rigid Plastics"
ASTM	D 790	"Flexural Properties of Unreinforced and Reinforced Plastics"
ASTM	D 1622	"Standard Test Method for Apparent Density of Rigid Cellular Plastics"
ASTM	D 1623	"Standard Test Method for Tensile And Tensile Adhesion Properties of Rigid Cellular Plastics"
ASTM	D 2126	"Standard Test Method for Response of Rigid Cellular Plastics to Thermal and Humid Aging"
ASTM	D 2584	"Volatile Matter Content"
ASTM	D 2842	Standard Test Method for Water Absorption of Rigid Cellular Plastics"
ASTM	D 3846	"Standard Test Method for In-Plane Shear Strength of Reinforced Plastics"

ASTM	D 4258	"Standard Practice for Surface Cleaning Concrete for Coating"
ASTM	D 4259	"Standard Practice for Abrading Concrete"
ASTM	D 4541	"Standard Test Method for Pull-Off Strength of Coatings Using Portable Adhesion Testers"
ASTM	D 4787	"Standard Practice for Continuity Verification of Liquid or Sheet Linings Applied to Concrete Substrates"
ACI	503	"Use of Epoxy Compounds with Concrete"
SSPC/ NACE	SP-13/ NACE 6	"Surface Preparation of Concrete"

37.03 DEFINITIONS

A. Coating Systems: includes surface description, surface preparation, required dry film thickness, and the number and application procedure of the prime and finish coatings. Systems are defined and identified in the article headed "Coating System Specification Sheets" in this Section of the Technical Specifications.

B. Field Coating: the application of the coating system in an existing manhole or structure.

C. Dry Film Thickness (DFT): the thickness of a fully cured coating or coating system.

D Wet Film Thickness (WFT): the thickness of a coating while wet.

E. Volatile Organic Content (VOC): the portion of a coating that is a compound of carbon, is photo chemically reactive, and evaporates during drying or curing, expressed in g/L or lbs/gal as defined in ASTM D3960.

F. Solvents: Those chemicals used to dilute the liquid coating either for thinning the coating or for cleanup.

G. Lead Containing: any coating that contains any detectable amount of lead.

H. Hard To Reach: areas that may not be accessible with spray equipment but can be reached by brush, mitt, or roller.

I. Inaccessible Areas: areas such as back-to-back angles, skip welds, and other areas that a brush, mitt, or roller cannot contact the surface.

J. Manhole Floor: the bench, channel and invert of the manhole containing the concrete/brick floor of a manhole generally shaped as a fillet to direct incoming flows to the outlet piping and to minimize solids buildup, the wall/bench joint, the shaped flow-ways within the bench, the bench/channel joint, and the invert which is the line of the lowest elevation along the bottom of the channel(s).

K. Manhole Wall: that part of the manhole extending from the bench/wall joint to the bottom of the cone/corbel.

L: Manhole Cone/Corbel: the reducing section which tapers concentrically or eccentrically from the top wall joint to the bottom of the chimney or the ring (frame) casting where there is no chimney.

M. Manhole Chimney: the narrow vertical section built from brick or concrete adjusting rings extending from the top of the cone/corbel to the bottom of the frame casting.

N. Leaks/ infiltration: presence of water, or indications of water, inside the manhole caused by subsurface water entering the manhole from the exterior through cracks, fractures, holes, broken seals, or other means.

O. Inflow: surface water generally entering into a manhole through or under the manhole cover, frame, frame seal, chimney wall, or at the cone/corbel chimney joint.

P. Void: as defined in ACI.

Q. pH: a measure of acidity and alkalinity.

R. Bug Holes: small regular or irregular cavities, not exceeding 15rnm in diameter, resulting from the entrapment of air bubbles of formed concrete during placement and compaction. Re-rounding shall not be permitted.

37.04 QUALIFICATIONS

A. The Contractor shall be certified and/or licensed by the coating system manufacturer(s) as an approved Applicator for the products referenced in this section.

B. The Applicator shall be the person responsible for the actual work, either as the foreman or the person actually applying the coating system.

37.05 SUBMITTALS

The Contractor shall submit the following to the Engineer

A. List of materials including coatings, repair materials, grouts, and blasting abrasive material proposed for use.

B. List of equipment and certification by the individual coating manufacturer that the application equipment is sufficient to adequately apply the coating.

C. For each coating system, provide the manufacturer's application guidelines including:
   1. Surface preparation guidelines.
   2. Primer type, where required.
   3. Maximum wet and dry thickness per coat.
   4. Minimum and maximum curing time between coats, and atmospheric conditions for each.
   5. Curing time before submergence in municipal wastewater.
   6. Thinner to be used with each coating.
   7. Ventilator requirements.
   8. Allowable application methods.
   9. Maximum storage life.
   10. Material safety data sheets.
   11 . Interpretation of batch code numbers.
   12. Minimum and maximum relative humidity requirements.
   13. Minimum and maximum surface temperature requirements.
   14. Minimum and maximum ambient temperature requirements.
   15. Manufacturer's recommended application procedure.

D. Shop Drawings for frame and cover castings.

E. Product Data for manhole cover inserts.

F. Provide information on planned surface preparation procedures including, when relevant. abrasive media, minimum water cleaning pressure and flow rate (e.g. 5000 psig @ 4 gpm) • nozzle types (e.g. zero degree rotating nozzle), etc. for coating systems specified. Surface preparation methods shall be based upon the conditions of the substrate and the requirements of the protective coating to be applied. Whichever method(s) are used, they shall be performed in a manner that provides a uniform, sound, clean neutralized surface. At the request of the Engineer, the Contractor shall test for adverse chemical conditions that may hinder overall product performance.

G. Maintenance of Traffic Plan including, but not limited to, specific dates that the Maintenance of Traffic Plan shall be in place.

H. Wastewater Bypass Pumping plan, where required.

I. List of all test equipment to be used, copies of the adhesive and equipment's instructions, adhesives, calibration procedures, MSDS sheets, and copies of all reference standards related to the test equipment.

37.06 QUALITY ASSURANCE/ QUALITY CONTROL

A. General
   1. Deviations from the manufacturer's printed instructions will not be allowed unless approved in writing by the Engineer.
   2. In the event of a discrepancy between the Contractor's, manufacturer's or City Inspector's testing equipment, all parties shall check equipment in question for proper function and calibration.

3. Where there is a conflict between the manufacturer's recommendations and these Technical Specifications, the manufacturer's recommendations shall govern.
4. Test equipment and procedures shall be the same throughout the Contract.
5. Quality Control: Contractor shall be responsible for the quality control of the coatings applied including surface preparation, testing, verifying access, dimensions, configuration, pipe connections, appurtenances, and details of each manhole prior to commencing any Work as well as remedial work to be completed as identified by inspection at the given check points.
6. Quality Assurance: City Inspector shall approve the Contractor's Work regarding surface preparation and quality control of the coatings applied. This documentation in no way relieves the Contractor of the responsibilities described under this Contract. The City Inspector may conduct tests on ambient conditions, pH and surface temperature, coating(s) applied, wet and dry film thickness, coating type coating batch numbers, and other tests.

B. QA/QC Check Points
1. pH Testing: Prior to surface preparation for cementitious coating application, measure and record pH of the manhole interior surface and other parameters as required by coating manufacturer to verify acceptable existing substrate conditions for application of the specified product and to document compliance with warranty requirements. After surface preparation and prior to coating system being applied to the interior of a manhole (excluding coatings to only the interior of a chimney), measure and record pH of the manhole interior surface in at least two locations as approved by the City Inspector. Adjust if required by the coating system manufacturer and per NACE 6/SSPC SP 13 Table 1 for severe service.
2. Concrete surface tensile strength: After surface preparation (including repair and resurfacing products) and prior to a polymer coating system being applied to the interior of a manhole (excluding coatings to only the interior of a chimney and spot type only repairs) measure and record the results of a minimum of two concrete surface tensile strength tests, without glue failures, per manhole at locations as directed by the City Inspector. Tests shall be per ASTM D4541 as modified herein. Utilize a 20 mm test dolly and portable pull-off adhesion tester. Document test failure mode. Failure of the dolly adhesive shall require retesting. If the concrete surface tensile strength is less than 200 psi (NACE 6/SSPC SP 13 Table 1 for light service) notify manufacturer and Engineer for approval before applying coating. (Destructive testing as defined herein shall be performed on the initial manhole coated with a particular coating system. After the initial test. 10% of the manholes coated may require testing as selected by the Engineer. Initial and additional testing required due to test failures shall be at the Contractor's expense.)
3. Wet Film Thickness (WFT): During coating system application, measure and record WFT of the coating in at least four locations in the manhole (one in a chimney) or as directed by the City Inspector. Use an industry standard WFT gage (ASTM D4414) designed for thick coatings. Minimum W FT thickness is specified for each product in the article headed "Coating System Specification Sheets" in this Section of the Technical Specifications.
4. Surface Moisture: After preliminary surface preparation and prior to a polymer coating system being applied to the interior of a manhole, measure and record surface moisture of the manhole interior surface in at least two locations per ASTM

D426 and use a DELMHORST ACCUSCAN moisture meter using a 0 to 100 relative scale.

5. Blotter Test: Upon start up of abrasive blasting, compressed air shall be checked daily for oil and water by blotter test per ASTM D4285.
6. Anchor Profile of Surface: After preliminary surface preparation and prior to coating application to the interior of a manhole (excluding coatings only for interior of a chimney) compare and record anchor profile by comparison to various grits of sandpaper.
7. Surface Preparation: Shall be accepted by the coating system manufacturer prior to the application of the coating system.
8. Ambient Conditions: Measure and record the test results for relative humidity, manhole wall surface temperature, dew point and ambient temperature to ensure compliance for materials applied.
9. Coating Adhesion: After polymer coating system application and cure, measure and record the results of a minimum of two adhesion tests, without glue failures, per manhole at locations within the manhole as directed by the City Inspector. Tests shall be per ASTM D4541 as modified herein. Utilize a 20 mm test dolly and portable pull-off adhesion tester. Document test failure mode, whether failure is within the substrate, failure is within the coating, or failure is at the coating/substrate interface. Failure of the dolly adhesive shall require retesting. If the testing damages the coating, spot repair the test location while following manufacturer's recommendations. Failure at the coating/substrate interface with less than 10% of substrate adhered to the coating and less than 100 psi pull-off strength, shall be deemed a coating system failure and the Contractor shall remove the coating to soundly adhered edges, re-perform surface preparation procedures, and recoat the failed surfaces, at the Contractor's expense. Low pull-off strength values <150 psi) may require additional testing/evaluation to determine potential adhesion defects at the sole discretion of the Engineer. (Destructive adhesion testing as defined herein shall be performed on the initial manhole coated with a particular coating system. After the initial test, 10% of the manholes coated may require testing as selected by the Engineer. Initial and additional testing required due to test failures shall be at the Contractor's expense.)
10. Holiday Testing: The finished polymer coating shall be inspected per ASTM D-4787 "Continuity Verification of Liquid or Sheet Linings Applied to Concrete Substrates", using high-voltage spark testing equipment with variable settings. Test voltage shall be set at an initial 100 volts per mil (4,000 volts per mm) of specified film thickness, and then increased as needed to compensate for relative conductivity of the concrete substrate by spark testing an induced holiday at furthest extension of test probe from grounding location. Once test voltage is determined, it shall be used throughout that area, and then re-determined again every time a new ground is made. Detected holidays shall be marked and repaired per coating manufacturer's recommendations. Contractor shall be responsible to provide necessary Holiday Testing equipment for final inspection. Pinhole testing shall be accomplished using a Tinker Razor Holiday Detector, San Gabriel, CA, Model AP/W or an Engineer approved equal model. A test voltage of 100 volts/mil is recommended. This test shall identify and allow for the repair of pinholes in order to ensure a continuous pinhole-free lining. (Testing shall only be required where full depth manhole coating is specified.)

11. Exfiltration Testing: If necessary or as required perform exfiltration testing according to the following guidelines: Manholes and wetwells 6 feet deep or less should see less than one (1) inch of loss in five (5) minutes. Manholes and wetwells greater than 6 feet depth use one (1) inch plus an additional one eight (1/8) inch per additional foot of depth.
12. Vacuum Testing: May be conducted per ASTM C1244-93 only after rehabilitated structure has cured for a minimum of seven (7) days.

37.07 CONTAINMENT AND SITE CONDITIONS

A. No grouting materials, solvents, chemicals, blasting media, or debris of any sort shall be allowed to be discharged to the wastewater collection system. Water from pressure washing (>100 psi) may be allowed to enter the system after any debris has settled, when it demonstrated to the satisfaction of the City Inspector that no debris will enter the collection system. Water applied at less than 100 psi and containing common, household strength detergents, which are used strictly for rinsing the interior surfaces of the structure, may be allowed into the system as long as no debris are washed into the system. All odors noticeable by the average person shall be confined to an area within 10 feet of the structure. The Contractor shall provide odor control equipment or methods so odors are confined and in conjunction with closed space entry or other safety requirements.

B. Provide environmental controls such as ventilators if the cure time of the coating is slowed by the presence of coating or solvent vapor, and heaters and/or dehumidification as necessary to meet coating application requirements.

C. Applicator shall conform to all local, state, and federal regulations including those set forth by OSHA, RCRA, and the EPA.

37.08 WARRANTY

The Contractor shall unconditionally guarantee all manhole rehabilitation Work in this Contract against defects of materials and workmanship for a period of 3 years under normal use, operation, and service in accordance with the requirements of the Supplemental General Conditions article headed "Guarantee Period".

The Contractor and cementitious coating manufacturer shall warrant all cementitious manhole coating Work in this Contract against defects of materials and workmanship for a period of 10 years under normal use, operation, and service. The Contractor shall provide all testing and prepare all required installation reports, warranty registration documentation, etc. and submit same to the coating manufacturer and Engineer on behalf of the City. The Contractor shall furnish a warranty certificate from the cementitious coating manufacturer indicating acceptance and commencement of the warranty period. The Contractor and coating manufacturer shall, within sixty (60) days of written notice thereof, propose an acceptable method and repair any defects (including all labor and materials) that may develop during the warranty period in a manner acceptable to the Engineer and at no cost to the City. Defects shall be defined as: visible leakage of groundwater into the manhole or separation of any part of the coating from the host manhole or coating interfacing joints.

37.09 MATERIALS

A. Coating Products: Pure calcium aluminate cementitious manhole coating systems shall be Product A or B. Reinforced polymer manhole coating system shall be Product C, D, E, F, G, or H. Approved equal must be submitted for review and approval by the Engineer and City prior to bid.

B. Repair and Resurfacing Products: Repair materials must be compatible with specified manhole coating products and selected to minimize curing time. The following products may be accepted and approved as compatible:

1. Deneef AC 40, Avanti AV 100, or approved equal pressure grout for infiltration elimination.
2. 100% solids, solvent free epoxy grout specifically formulated to be suitable for top coating with the specified coating product(s}.
3. Factory blended, rapid setting, high early strength, fiber reinforced, non-shrink repair mortar that can be troweled or pneumatically spray applied, and specifically formulated to be suitable for top coating with the specified coating product(s}.
4. Products specifically designed for thin (1/4-inch or less) applications shall be used for channels needing to be raised to match or transition with CIPP (cured-in-place pipe) liners. Product shall be SikaTop 123 PLUS, or approved equal. Where manholes with CIPP liners are scheduled to receive a coating, any channel repair materials shall be as recommended by the specific coating manufacturer.

C. Brick Masonry and Precast Concrete Grade Adjustment Rings

1. Bricks shall be new, first quality, sound, hard, uniformly burned, regular and uniform in shape and size. Under burned or salmon brick shall not be acceptable. Only whole brick shall be used. Bricks shall conform to ASTM C32, Grade SS.
2. Precast concrete grade adjustment rings shall conform to the requirements of ASTM C 478. Precast adjustment rings shall not be less than 2 inches thick or be of multiple piece construction. To accommodate steep surface grades, non-uniform precast grade adjustment rings may be manufactured to 2 inches thick on one side and 3 inches thick on the opposite side.
3. Precast concrete grade adjustment rings shall provide structural capacity equal to or greater than the existing or specified manhole frame casting and shall not affect the opening size or surface appearance.
4. Mortar shall be factory blended, rapid setting, high early strength, fiber reinforced, non-metallic, chloride free, non-shrink or low-shrink repair mortar that can be troweled.

D. Frame and Cover Castings

1. Grey Iron castings shall conform to the requirements of ASTM A48 Class 35 B, unless otherwise specified, and be designed for HS-20 load rating.
2. Castings shall be manufactured true to pattern, and component parts shall fit together in a satisfactory manner. They shall be smooth and well cleaned by shot blasting. Circular manhole frame and cover castings shall be furnished with machined horizontal bearing surfaces. Frame and cover castings of the same nominal size shall be interchangeable.

E. Internal Chimney Sealant
1. The chimney sealant shall be minimum 100 mils thick of corrosion resistant aromatic flexible urethane resin coating applied to the inside wall of the chimney and manhole frame casting. The product shall have a minimum elongation of 800% and a Durometer of 75. The seal shall remain flexible allowing repeated vertical or horizontal movements of the manhole frame due to frost lift, ground movement or the thermal movement of pavements.
2. The chimney sealant shall have a minimum tensile and adhesion strength of 1150 PSI and 175 lb. per linear inch respectively. The chimney sealing system shall conform to the physical requirements of ASTM 0412. The chimney sealant shall be Flex-Seal Utility Sealant as manufactured by Sealing Systems. Inc. or approved equal.

F. Manhole Cover Insert
1. The insert body shall be manufactured of 304 stainless steel with a minimum thickness of 18 gauge. The insert shall have a deep-dish bowl design to allow for easy removal of the manhole cover. The insert shall be designed to provide a sufficiently loose fit in the manhole frame casting to allow for easy removal.
2. The insert body gasket shall seal against the frame casting, be made of closed cell neoprene, and affixed to the insert body with a pressure-sensitive adhesive. The gasket shall have a minimum thickness of 1/8 inch and be installed by the manufacturer.
3. The insert body shall have a handle made 3/16" plastic coated 304 stainless steel cable installed on the side of the bowl and attached with two 304 stainless steel round head bolts with flat washers and self-locking nuts.
4. The manhole cover insert and components shall be manufactured of materials resistant to corrosion from atmospheres containing hydrogen sulfide and dilute sulfuric acid. The manhole cover insert shall be InflowShield as manufactured by Inflow Systems, Inc. or approved equal.

G. Standardization: Materials, supplies, and articles provided shall be the standard products of the manufacturers and coating system specified. Coatings in a particular system shall be the products of a single manufacturer.

H. Delivery, Storage and Handling: Deliver materials for field application to the job site in their original, unopened, undamaged containers. Each container shall bear the manufacturers name brand, batch number, date of manufacture, and storage life. Coatings shall be stored in enclosed structures and shall be protected from weather, excessive high or low temperatures, and spills. Coatings exceeding storage life recommended by the manufacturer or that have been visibly damaged shall be removed from the site. Coating materials are to be stored and handled in accordance with their material safety data sheets.

37.10 REPAIR & PREPARATION

A. Repair of Bench and Channel: Manhole bench, flow channels, and inverts shall be repaired and/or constructed as directed to provide smooth flow characteristics and transition of flow through the manhole.

1. Contractor shall prepare, clean, and repair/rebuild manhole bench and flow channel(s) in the same manner as described above. Remove obstructions and loose materials from bench prior to shaping the channel and invert. Using brick and repair/resurfacing mortar, form a smooth, U-shaped channel having a minimum depth of one-half pipe diameter across the floor of the manhole using approved manhole rehabilitation materials. The top edge of the bench at the manhole wall shall be set at an elevation above one-half diameter of the adjacent pipe(s) and sloped at 1-inch per foot to drain toward the flow-through channel and outgoing pipe, and to intersect the channel edge at the one-half diameter level. Active flow shall be diverted as required to allow sufficient setting time for material used.
2. Form a smooth transition with a reshaped channel invert and a raised manhole bench to eliminate sharp edges on the pipe, bench, channel, or invert. Build up and smooth the invert of manhole to match flow line of the connecting pipes. Channel build-up and surface preparation for manholes to be coated shall be in accordance with the section headed "General Coating Preparation" in this Section of the Technical Specifications.
3. Finished benches, channels and inverts shall be smooth and without defects which would allow for accumulation of debris. Finished benches, channels and inverts shall conform to the Contract Documents.

B. Repair/Replacement of Chimney and Frame and Cover Casting

1. Frame and Cover Casting: Frame and cover castings shall be replaced with Contractor or City furnished frame and covers, as directed. Frame and cover replacement varies according to manhole type and shall be performed in accordance with the requirements of the Contract Documents. The existing castings shall be salvaged and delivered to the designated location.
2. Chimney: Manholes that have defective chimneys, frames and/or covers, or covers below grade will be designated for adjustment or replacement of the frame and cover. The Work shall include the following:
    a. Saw cut and remove existing asphaltic or concrete pavement. Existing brick or paver stone pavement shall be carefully removed without cutting and salvaged for reuse. Excavate to at least 6 inches below the bottom of the chimney replacement.
    b. Remove the existing manhole frame and cover casting, salvage and reuse the existing casting where adjustment is required, or deliver the salvaged casting to the designated location where replacement is required. Frames broken during removal or handling by the Contractor shall be replaced at the Contractor's expense.
    c. Remove loose, cracked, broken, deteriorated, deficient or otherwise unsound existing chimney materials as required or directed by the Engineer. Existing Portland cement brick shall be removed and replaced regardless of condition. Where existing frame and cover castings are being replaced with a larger frame and cover casting, the existing chimney/corbel shall be removed and replaced as required to provide a chimney that matches the opening of the larger replacement frame casting. Existing surfaces shall be cleaned and prepared for chimney replacement.
    d. The top of the cone shall be set between two and one-half inches and fourteen and one-half (14 1/2) inches below the bottom of the manhole cover

frame. It is the intent of the specifications to provide a minimum of two and one-half inches to accommodate future grade changes without disturbing the manhole. Where the distance between the bottom of the manhole cover frame and the top of the cone is greater than fourteen and one-half (14 1/2) inches, 12-inch riser units shall be used to bring the top of the cone to within the limits specified.

e. Replace existing chimney with new specified materials. The elevation and horizontal position of the frame shall be adjusted as necessary by installing precast grade adjustment rings or a sufficient number of brick and mortar rows to obtain the desired elevation. The frame and cover elevation and cross slope shall match the existing adjacent pavement. The frame and cover elevation shall be minimum 1 inch above existing grade in unpaved areas, or higher as directed by the Engineer. No materials other than the prepared mortar bed shall be used to obtain final elevation and slope of the frame. The prepared mortar bed shall be minimum 1/2 inch thick.

f. Backfill the excavation and restore surfaces to a condition equal or better than the existing condition prior to construction, in accordance with the requirements of the Contract Documents.

C. Elimination of Infiltration: Infiltration shall be considered as "Minor" or "Severe". (1) "Minor" infiltration consists of water penetration of the manhole structure, appearing as a wet stain or a minute flow (trickle) of water on the interior surface of the manhole. (2) "Severe" infiltration consists of multiple leaks penetrating an area or of single leaks that spray into the interior of the manhole which require drilling through the manhole structure and pumping grout by the use of pressurized injection grouting equipment to stop active leaks. Contractor shall ensure that all visible leaks are eliminated in accordance with the Contract Documents and the coating manufacturer's material recommendations prior to surface preparation and coating application.

1. "Minor" infiltration: If observed within the manhole structure after surface preparation is complete, the area shall be prepared and a product specifically formulated for infiltration control and recommended by the specified manhole coating manufacturer(s) shall be used to stop minor infiltration flows in accordance with the product manufacturer's guidelines.
2. "Severe" infiltration: Requires manhole drilling and pressure grouting. The products used for pressure grouting shall be installed in accordance with the manufacturer's guidelines. Substitute materials shall meet manhole coating manufacturer's recommendations for the particular manhole coating system specified.
    a. Manhole grouting shall only be performed where approved and after associated Work such as CIPP lining.
    b. Chemical grouting shall be performed beginning at the bottom of the manhole and continue up as required to seal all points of severe infiltration.
    c. Grouting, once commenced, shall be completed without stoppage. In case of equipment breakdown, wash out grouting system sufficiently to ensure fresh grout and adequate bond and penetration will occur upon restart. Maintain grout pressure until grout has set.
    d. Grout travel shall be verified by migration of grout to defects or adjacent injection holes.
    e. Injection holes shall be cleaned and patched with waterproof quick setting

mortar as recommended by grout manufacturer.

D. General Coating Preparation

1. Surfaces to be coated shall be cleaned and prepared per the coating manufacturer's recommendations or per International Concrete Repair Institute (ICRI) Guideline Number 03732, whichever is more rigorous. Before applying coating, all contaminants including wastewater, oil, grease, dirt, rust, loose mill scale, waxes, efflorescence, sealers, salts, old coatings, and other foreign substances shall be removed. Oil and grease shall be removed before mechanical cleaning (hydro-blasting) is started. Where mechanical cleaning is accomplished by abrasive blast cleaning, the abrasive used shall be washed, graded and free of contaminates which might interfere with the adhesion of the coating. Steam cleaning, detergent, industrial degreasers, and/or hot water shall be used to clean wall surfaces unless this is contrary to the recommendations of the specific coating system manufacturer. Acid solutions shall not be used.
2. As necessary, wastewater flow shall be stopped, bypassed or diverted for the preparation and application of the coating product{s).
3. Contractor shall prepare, clean, and seal all manhole wall penetrations in accordance with coating manufacturer's recommendations and as approved by the Engineer. Bench, channel, invert, chimney, and frame and cover casting repairs and/or replacements shall be completed before coatings are applied.
4. During surface preparation and coatings application, all nearby equipment, vehicles, structures, etc. shall be protected from blasting grit, dust and over sprayed, dropped or spilled materials. Surfaces adjacent to a proposed leading edge of coating application shall be taped-off or otherwise protected.
5. Clean cloths and clean fluids shall be used in solvent cleaning.
6. Contractor shall inspect all surfaces specified to receive a protective coating prior to surface preparation. Contractor shall notify Engineer of any noticeable disparity in the surfaces which may interfere with the proper preparation or application of the repair mortar and coating. Surface profile created by mechanical cleaning shall be per the coating manufacturer's recommendations.
7. Damaged surfaces shall be observed by the City Inspector before repairs are made. Where concrete or brick deterioration in a manhole structure is severe, structural integrity may need to be restored prior to application of coating, at Engineer's approval.
8. All active infiltration must be eliminated prior to proposed repair with materials as recommended by the coating manufacturer.
9. Plug or place covers over all pipe openings to prevent extraneous material from entering the wastewater system.

E. Surface Preparation of Concrete and Masonry Surfaces

1. Concrete: prepare per SSPC SP13/NACE 6 "Surface Preparation for Concrete," and the coating manufacturer's recommendations. All leaks evidenced by indications of infiltration, shall be plugged with materials as recommended by coating manufacturer. Surface profile created by abrasive blasted surfaces shall be per the manufacturer's recommendation for the coating system.
2. Brick Manhole: prepare per the coating manufacturer's recommendations. Contractor shall remove all oil, grease, chemicals and paints or protective coatings

by chemical cleaning prior to hydro-blasting or abrasive blasting. All foreign particles and attacked or unsound mortar shall be removed from the joints. All leaks evidenced by indications of infiltration, shall be plugged with materials as recommended by coating manufacturer. Loose brickwork and voids in the mortar joints shall be re-grouted with repair materials to provide a void free smooth surface for coating application.

3. Loose or protruding brick, mortar and concrete shall be removed by using a mason's hammer and chisel. The surface to be repaired must be clean and free of any loose materials.
4. Repair products shall be used to fill bugholes, holes, honeycombs, for patching of deep craters, voids or spalled areas of concrete, and/or smoothing transitions between components prior to coating installation. Products used must be compatible with the specified coating system(s) and used/applied in accordance with the repair product manufacturer's recommendations. Materials used shall be recommended by the coating system manufacturer.
5. Resurfacing/repair products shall be mixed, applied, allowed to cure, and treated per their manufacturer's recommendations, before they are coated. The Contractor shall ensure that resurfacing/repair and/or patching materials are fully cured before final surface preparation or coating application. The Contractor shall follow manufacturer's cure schedule before over coating.
6. Surfaces which are to be coated shall be allowed to dry to the moisture content recommended by the coating manufacturer.

F. Coating Interface with Adjoining Construction Materials

1. Coating product(s) shall interface with adjoining construction materials throughout the manhole structure to effectively seal and protect concrete or masonry substrates from infiltration and attack by corrosive elements. Procedures and materials necessary to affect this interface shall be as recommended by the coating product(s) manufacturer and approved by the Engineer. Termination points of the polymer coating product(s) shall have a minimum three (3) inch interface overlap with each pipe penetration. Termination points of the cementitious coating product(s) shall have flush interface abutting each pipe penetration. Wastewater flow shall be stopped, bypassed or diverted for the preparation and application of the coating product(s) to the invert and interface with pipe materials.
2. CIPP Liners: Polymer manhole coatings shall be chemically compatible with and have the ability to bond with the external or internal (with required surface preparation) surface of CIPP liners. Where manholes are coated in conjunction with CIPP lining activities by others, coating shall take place after pipe lining and utilize the existing wastewater Bypass Pumping setup where possible. Resurfacing/repair products shall be selected to minimize curing time. Manhole surface preparation and repair materials prior to coating shall be placed within the invert, channel, and benches at proper depth to allow for proper coating thickness, interface matching with CIPP profile, and minimum three (3) inch overlap of polymer coatings with CIPP terminal edges (internally or externally) in the invert, channel, benches, and remaining areas. The coating shall be monolithic with piping and manhole components. The CIPP surface to be interfaced with and overlapped with polymer coatings shall be clean and remain protected prior to coating. Surface preparation of internal CIPP surfaces shall require wire brushing or other approved means prior to coating to ensure bonding.

G. Final Cleaning: The Contractor shall ensure that all surfaces to be coated are free of dust, moisture, and condensation. Nearby surfaces shall be cleaned to prevent contamination of substrate or freshly applied coatings.

H. Internal Chimney Sealant Application
1. All loose and protruding mortar and brick that would interfere with the seal's performance shall be removed and the manhole frame casting, chimney and cone/corbel cleaned by wire brushing. Prepare the surface as required by the manufacturer.
2. Active infiltration shall be corrected in accordance with the requirements of the section headed "Elimination of Infiltration" in this Section of the Technical Specifications prior to installing the internal chimney sealant. Resurfacing/repair products shall be completely cured in accordance with the manufacturer's requirements prior to installing the internal chimney sealant. The substrate surface must be free of sand, loose debris, dust, dirt, oil, grease or chemical contamination. A blower may be required to completely dry the substrate surface as recommended by the manufacturer.
3. Ensure the frame casting and structure is clean and dry prior to applying the adhesive primer. Brush the adhesive primer onto the casting and structure surfaces where the sealant is intended to adhere, in accordance with the requirements of the manufacturer.
4. The chimney sealant shall be evenly brush applied to the required thickness after the adhesive primer has dried, in accordance with the requirements of the manufacturer.
5. The chimney sealant shall be applied and extend vertically from 1-inch above the frame seal to 2-inches below the chimney and cone/corbel joint. The chimney sealant shall be applied and extend vertically from 1-inch above the frame seal to 12-inches below the frame seal for brick manholes where the frame is installed directly on the cone/corbel.

I. Manhole Cover Insert Installation
1. The Contractor shall accurately measure the existing frame and cover casting prior to ordering the manhole cover insert.
2. The manhole frame casting seat shall be free of all dirt, debris, rust and scale prior to the installation of the manhole cover insert. The insert shall be fully seated around the frame casting seat to ensure against water seepage between the insert and frame casting, and as recommended by the manufacturer.

37.11 COATING MATERIAL APPLICATION

A. Workmanship: Coating shall be conducted in accordance with the requirements of SSPC, Good Painting Practice, Volume 1.
1. Coated surfaces shall be free from significant runs, drips, ridges, waves, laps and brush marks, etc. Coats shall be applied so as to produce an even film of uniform thickness.
2. Coating equipment shall be designed for application of the materials specified.
   a. Compressors shall have traps and filters to remove water and oils.
   b. Spray equipment shall be equipped with mechanical agitators, pressure gages, and pressure regulators, and spray nozzles of the proper sizes and functioning in a manner suitable to perform the work.
   c. The spray equipment shall be specifically designed to accurately ratio and apply the specified protective coating materials and shall be regularly maintained and in proper working order. Spray application equipment must be approved by the coating manufacturer and shall be used to apply each coat of the protective coating.
3. Each coat shall be applied evenly and sharply cut to line.

B. Coating Properties, Mixing, and Thinning

1. Coating shall provide a monolithic film with coverage of all specified surfaces and interfacing joints. Undercoats shall be sanded as required to provide a surface suitable for the proper application and adhesion of subsequent coats. Coating shall be thoroughly stirred, strained, and kept at a uniform consistency during application.
2. Coatings shall be mixed in accordance with the manufacturer's instructions.
3. Clean, potable water shall be used for mixing and accurately metering to the prescribed amount for each batch of the lining system

C. Method of Coating Application

1. Observe OSHA Safety Guidelines when entering Confined Space working areas
2. Where two or more coats are required, all coats shall be WFT tested.
3. Coating shall not be applied to a surface until it has been prepared as specified and approved for coating by the manufacturer.
4. Action shall be taken to prevent rebound material from entering active sewer lines

D. Film Thickness and Continuity

1. Coating system thickness is the total thickness of primer and finish coats. Coatings shall be applied to the thickness specified.
2. Overspray, pinholes and other surface defects shall be repaired.

37.12 COATING SYSTEM SPECIFICATION SHEETS

Coating Systems specified for use appear on the following pages.

Product A

Manufacturer:	Kerneos Inc., 1316 Priority Lane, Chesapeake, VA-1-877-KERNEOS, 757-284-3200 or FAX 757-284-3300.
Product Name:	SewperCoat PG
Qualifications:	Applicator shall be trained and certified by the manufacturer as qualified to apply the specified coating. Applicator qualifications are addressed under item 12 of the Proposal Questionnaire. Provide references and documentation of certification and experience with submittals.
Material Classification:	Pre-packaged 100% calcium aluminate fiber reinforced cementitious monolithic coating composed of pure fused calcium aluminate cement and manufactured calcium aluminate aggregate (no other aggregate material permitted), and is resistant to biosulfuric acid attack. Chemical composition of the calcium aluminate cement and aggregate portion: Al_20_3= 39 - 44%, CaO = 34 - 38%, $FeO+Fe_20_3$ = 9 - 15%, $Si0_2$=6 - 8%.
Surfaces:	Field applied to existing manholes. Coat all of interior of existing concrete, brick, and block manholes, including channels, and interfacing pipe joints.
Color:	Gray
Compressive Strength:	>7,000 psi @ 28 Days per ASTM C1 09
Tensile Strength:	>700 psi @ 28 Days per ASTM C496
Flexural Strength:	> 1,300 psi @ 28 Days per ASTM C348
Shrinkage @ 90% RH:	<0.07% @ 28 Days per ASTM C596
Bond:	>2,500 psi @ 28 Days per ASTM C882

Freeze-Thaw:	No visible damage after 300 cycles per ASTM C666
Density:	Per manufacturer
Service Condition:	Immersed, non-immersed, domestic wastewater corrosive environment.
Surface Preparation:	Per the International Concrete Repair Institute (ICRI) Guideline No. 03732 and the section headed "Preparation" in this Section of the Technical Specifications. Inject or hand pack grout to seal holes, leaks and seeping. Prepared surface shall be thoroughly moistened with water prior to the application. Do not apply to surfaces with running water.
Repair Materials:	Patching grout, infiltration control grout, and any other repair materials shall comply with the recommendations of the manufacturer. No holes or honeycomb surfaces should remain after the application of the repair mortar. Materials shall be fully cured before coating is applied.
Environmental Controls:	Minimum air temperature 40 degrees F and do not expose to rain or snow. Maximum mix temperature 90 degrees F at time of application. Provide ventilation as recommended by manufacturer. Provide wastewater bypass as necessary
Application:	Field application by "wet-shotcrete" method typically with a low-pressure progressive cavity (rotor/stator) type pump that is clean and free of any Portland cement residue. Only unopened manufacturer pre-packaged material permitted for use and mixed with clean potable water per manufacturer's recommendation. Applied by trained technician who is experienced in the application of spray applied cementitious coatings and has been certified by the manufacturer. Coating shall be applied within 24 hours of completion of surface preparation. The finished bench surfaces shall be smooth, free of ridges and will be sloped in the direction of flow. Special care shall be used to ensure a smooth transition between the new manhole invert and intersecting pipe inverts such that flow will not be impaired. Manufacturer to certify equipment proposed for use by Contractor.
Curing:	Per manufacturer's recommendations and minimum 18 hours moist curing. Curing compound, if required, shall meet the requirements of ASTM C309 and be approved by the lining material manufacturer and the Engineer prior to use. Minimum 6 hours curing prior to contact or immersion with flowing wastewater
Thickness:	Minimum of 1/2 inch DFT
Tolerances:	Minus 0 inches.
Cleanup:	Water
Inspection Check Points:	See the subsection headed "Quality Assurance/Quality Control" in this Section of the Technical Specifications. Check Points 1 through 10.

Product B

Manufacturer:	The Strong Company, Inc., 4505 Emmett Sanders Road, Pine Bluff, AR -1-800-982-8009 or FAX 870-850-6933.
Product Name:	High Performance Mix
Qualifications:	Applicator shall be trained and certified by the manufacturer as qualified to apply the specified coating. Applicator qualifications are addressed under item 12 of the Proposal Questionnaire. Provide references and documentation of certification and experience with submittals.
Material Classification:	Pre-packaged 100% calcium aluminate fiber reinforced cementitious monolithic coating composed of pure fused calcium aluminate cement and

	manufactured calcium aluminate aggregate (no other aggregate material permitted) and is resistant to biosulfuric acid attack. Chemical composition of the calcium aluminate cement and aggregate portion: Al_20 3::: 39 44%, CaO ::: 34 - 38%, $FeO+Fe_20_3$ ::: 9 - 15%, $Si0_2$::: 6 - 8%.
Surfaces:	Field applied to existing manholes. Coat all of interior of existing concrete, brick, and block manholes, including channels, and interfacing pipe joints.
Color:	Gray
Compressive Strength:	>9,000 psi @ 28 Days per ASTM C109
Tensile Strength:	>800 psi @ 28 Days per ASTM C496
Flexural Strength:	>1,300 psi @ 28 Days per ASTM C293
Shrinkage @ 90% RH:	0% @ 28 Days per ASTM C596
Bond:	>3,000 psi @ 28 Days per ASTM C882
Freeze-Thaw:	No visible damage after 300 cycles per ASTM C666
Density:	Per manufacturer.
Service Condition:	Immersed, non-immersed, domestic wastewater corrosive environment.
Surface Preparation:	Per the International Concrete Repair Institute (ICRI) Guideline No. 03732 and the section headed "Preparation" in this Section of the Technical Specifications. Inject or hand pack grout to seal holes, leaks and seeping. Prepared surface shall be thoroughly moistened with water prior to the application. Do not apply to surfaces with running water.
Repair Materials:	Patching grout, infiltration control grout, and any other repair materials shall comply with the recommendations of the manufacturer. No holes or honeycomb surfaces should remain after the application of the repair mortar. Materials shall be fully cured before coating is applied.
Environmental Controls:	Minimum air temperature 40 degrees F and do not expose to rain or snow. Maximum mix temperature 90 degrees F at time of application. Provide ventilation as recommended by manufacturer. Provide wastewater bypass as necessary.
Application:	Field application by "wet-shotcrete" method typically with a low-pressure progressive cavity (rotor/stator) type pump that is clean and free of any Portland cement residue. Only unopened manufacturer pre-packaged material permitted for use and mixed with clean potable water per manufacturer's recommendation. Applied by trained technician who is experienced in the application of spray applied cementitious coatings and has been certified by the manufacturer. Coating shall be applied within 24 hours of completion of surface preparation. The finished bench surfaces shall be smooth, free of ridges and will be sloped in the direction of flow. Special care shall be used to ensure a smooth transition between the new manhole invert and intersecting pipe inverts such that flow will not be impaired. Manufacturer to certify equipment proposed for use by Contractor.
Curing:	Per manufacturer's recommendations and minimum 18 hours moist curing. Curing compound, if required, shall meet the requirements of ASTM C309 and be approved by the lining material manufacturer and the Engineer prior to use. Minimum 6 hours curing prior to contact or immersion with flowing wastewater.
Thickness:	Minimum of 1/2 inch DFT
Tolerances:	Minus 0 inches.
Cleanup:	Water
Inspection Check Points:	See the subsection headed "Quality Assurance/Quality Control" in this Section of the Technical Specifications. Check Points 1 through 10.

Product C

Manufacturer:	Protective Liner Systems, Inc. 7625 Mall Parkway, Lithonia, GA 30038. P.O. Box 921, Lithonia, GA 30058. (770) 482-5201, (770) 861-9965.
Product Name:	PLS-650 PerpetuWall Liner System. (PLS-613, PLS-614, PLS-700 and PLS-618)
Qualifications:	Applicator shall be trained and certified by the manufacturer as qualified to apply the specified coating. Applicator qualifications are addressed under item 12 of the Proposal Questionnaire. Provide references and documentation of certification and experience with submittals.
Material Classification:	Fiberglass-reinforced modified epoxy resin monolithic coating system. 100% solids bisphenol A epoxy resin with polyamide curing agent. Materials per ASTM D638-Test Method for Tensile Properties of Plastics, and ASTM D790-Test Methods for Flexural Properties of Unreinforced and Reinforced Plastics and Electrical Insulating Materials.
Surfaces:	Field applied to existing manholes. Coat all of interior of existing concrete, brick, and block manholes, including channels and interfacing pipe joints.
Color:	Light gray
Compressive Strength:	16,800 psi per ASTM D695
Tensile Strength:	12,400 psi per ASTM D638
Flexural Strength:	13,900 psi per ASTM D790
Shrinkage @ 90% RH:	500,000 psi per ASTM D790
Bond:	Shall exceed tensile strength of substrate
Low-Temp. Flexibility:	Per manufacturer, per ASTM D1790
Density:	Per manufacturer.
Service Condition:	Immersed, non-potable, non-immersed, domestic wastewater, corrosive environment, interior and exterior water pressure, traffic areas.
Surface Preparation:	Per the section headed "Preparation" in this Section of the Technical Specifications. In addition, galvanized steel and aluminum may require etching. Inject or hand pack grout to seal holes, leaks and seeping. Can be applied to wet or dry surface. do not apply to surfaces with active infiltration or running water.
Repair Materials:	Patching grout, infiltration control grout, and any other repair materials shall comply with the recommendations of the manufacturer. No holes or honeycomb surfaces should remain after the application of the repair mortar. Materials shall be fully cured before coating is applied.
Environmental Controls:	Provide heaters, dehumidification, and ventilation as recommended by manufacturer and as needed. Provide wastewater bypass as necessary.
Design:	Shall be designed to withstand the hydraulic load generated by the groundwater table. The invert and bench coating thickness shall be the same as that required at the bottom of the manhole wall as determined by the manufacturer's standard engineering calculations for groundwater pressure. Coating thickness design to be based on the groundwater table being one foot below the ground surface. Testing required for design values of the flexural modulus of the coating will be verified by a third-party independent testing lab paid for by the Contractor. The test results and design information for each individual structure shall be submitted to the Engineer for review.
Application:	Field application of PLS-613 or PLS-614 depending on temperature and conditions of application by trained technician who has been certified by the

	manufacturer. PLS-613 can be hand applied by brush, roller or trowel on dry or wet surface. PLS-614 is applied by trowel on dry or wet surface. Coating shall be applied within 24 hours of completion of surface preparation. Coating steps: (1) Begin with an approximate WFT of 100 mils (2) fiberglass fabric cut and pressed into epoxy mastic to full wet-out (3) adjacent applications of fabric edges to be overlapped or butt-jointed (4) fabric top coated with epoxy PLS-613 or PLS-614. Additional coats can be applied in 2-3 hours, but no later than 24 hrs. The finished bench surfaces shall be smooth, free of ridges and will be sloped in the direction of flow. Special care shall be used to ensure a smooth transition between the new manhole invert and intersecting pipe inverts such that flow will not be impaired. Manufacturer to certify equipment proposed for use by Contractor.
Curing:	Coating will cure in 3-4 hours at 70 degrees F to approximately 75% of their strength, after which time may be subjected to active flow. Maximum physical properties achieved in 4-5 days. Higher temperatures will reduce these requirements.
Thickness:	Per manufacturer's design. 125 mils minimum thickness.
Tolerances:	Plus 20 mils or minus 10 mils.
Cleanup:	Clean equipment with Xylene or lacquer thinner. Clean hands with denatured alcohol or Go-Jo type hand cleaner. Dispose of solvent and debris as required by code.
Inspection Check Points:	See the subsection headed "Quality Assurance/Quality Control" in this Section of the Technical Specifications. Check Points 1 through 10.

Product D

Manufacturer:	International Paint LLC; 6001 Antoine Drive, Houston TX 77091 (713) 682-1711
Product Name:	Enviroline 222
Qualifications:	Contractor/applicator trained in the application of high-performance industrial lining systems
Material Classification:	Epoxy novolac
Surfaces:	Carbon steel, stainless steel, concrete; substrate preparation and application in accordance with Manufacturer Data Sheet and Application Guidelines
Color:	Green, Gray
Compressive Strength:	ASTM D695 @ 40 mils TDFT: 72MPa
Tensile Strength:	ASTM D638 @ 40 mils TDFT: 38MPa
Flexural Strength:	ASTM D790 @ 40 mils TDFT: 66MPa
Shrinkage @ 90% RH:	N/A
Bond:	1700 psi on steel, exceeds tensile strength of concrete
Low-Temp. Flexibility:	N/A
Density:	11.4 lbs/gal (1.62 g/cm) / ASTM D1475
Service Condition:	Immersion or secondary containment of wastewater infrastructure, non-potable water and chemicals
Surface Preparation:	Substrate preparation in accordance with Manufacturer Data Sheet and Application Guidelines
Repair Materials:	Intercrete 4801, 4802 & 4820, for topcoat epoxy repair: Enviroline 222 and depending on service, Enviroline 124
Environmental Controls:	Substrate preparation and application in accordance with Manufacturer

	Data Sheet and Application Guidelines
Application:	Application in accordance with Manufacturer Data Sheet and Application Guidelines
Curing:	8 hours at 77° F.
Thickness:	20-100 mils TDFT
Tolerances:	SSPC-PA 2 Level 3
Cleanup:	Enviroline 71C
Abrasion Resistance	ASTM 4060 average of 41.4 mg weight loss per 1000 cycles, CS17 wheel with 1kg loading
Severe Wastewater Analysis Test (ASTM G210)	ASTM G210 Performed well in Severe Wastewater Analysis Test
Inspection Check Points:	See the subsection headed "Quality Assurance/Quality Control" in this Section of the Technical Specifications. Check Points 1 through 10.

Product E

Manufacturer:	Tnemec Company, Inc. 123 West 23rd Ave, North Kansas City, MO, 64116 Phone: 1-816-483-3400 Represented locally by Florida Protective Coatings Services Office Phone: (407) 322 – 1243 Local Representative (Chad Holmes) Phone: (727) 201 – 6706
Product Name:	Tnemec Perma-Shield Series 435 Perma-Glaze
Qualifications:	Applicator must have a minimum NACE level 1 on staff and have a minimum 5 completed projects of similar size & complexity to this work with the use of Tnemec coatings. Applicator must meet all other requirements of the municipality.
Material Classification:	Micro-Fiber Reinforced, Modified Polyamine Epoxy
Surfaces:	Field applied to existing manholes. Coat all of interior of existing concrete, brick, and block manholes, including channels and interfacing pipe joints.
Color:	Gray or Beige
Compressive Strength:	No Less than 9,427 (65.0 MPa) compressive strength, average of five tests.
Tensile Strength:	No less than 3,231 psi (22.28 MPa) tensile strength.
Tensile Modulus of Elasticity (ASTM D2370)	No less than 241,368 psi (1664.17 MPa) tensile modulus of elasticity.
Service Condition:	**Non-potable, anaerobic wastewater environments with mild H_2S concentrations (Immersion & Headspace).**
Surface Preparation:	Abrasive blast or mechanically abrade in accordance with SSPC-SP13/NACE No. 6 to remove all existing coatings and provide a minimum ICRI CSP 5 surface profile. Surface must be clean, dry, and contaminant-free prior to coating.
Repair Materials:	Tnemec Series 218 at a nominal 1/8” and as needed to bring surfaces to level. Series 217 may also be used for deeper repairs (See Application Guide for details).
Environmental Controls:	Substrate temperature should be at least 5°F above the dew point. Refer to manufacturer’s latest written recommendations for additional guidance.
Application:	Refer to product data sheet and Series 435 Application Guide for latest storage, equipment, and application recommendations. Refer to Tnemec’s Perma-Shield Details Guide for construction details

Curing:	Maximum recoat window is 7 days. Cure for 2 days (at 75°F) prior to placing into service.
Thickness:	30.0 – 40.0 mils in one or two coats.
Cleanup:	Tnemec's #4 thinner or MEK.
Abrasion Resistance	No more than 72 mg loss after 1,000 cycles, average of three tests
Severe Wastewater Analysis Test (ASTM G210)	Initial impedance of 12.46 log-Z at 0.01 Hz (ohms cm²). No blistering, cracking, checking or delamination. No less than 84.3% retention and no more than 1.95 ohms cm² reduction in electrochemical impedance after 28 days exposure. No less than 93% loss of tensile adhesion after 28 days in S.W.A.T. average of three tests.
Inspection Check Points:	See the subsection headed "Quality Assurance/Quality Control" in this Section of the Technical Specifications. Check Points 1 through 10.

Product F

Manufacturer:	Tnemec Company, Inc. 123 West 23rd Ave, North Kansas City, MO, 64116 Phone: 1-816-483-3400 Represented locally by Florida Protective Coatings Services Office Phone: (407) 322 – 1243 Local Representative (Chad Holmes) Phone: (727) 201 – 6706
Product Name:	Body Coat (Option 1): Tnemec Series 434 Perma-Shield H_2S. Body Coat (Option 2): Tnemec Series 436 Perma-Shield FR. Glaze Coat: Tnemec Series 435 Perma-Glaze
Qualifications:	Applicator must have a minimum NACE level 1 on staff and have a minimum 5 completed projects of similar size & complexity to this work with the use of Tnemec coatings. Applicator must meet all other requirements of the municipality.
Material Classification:	434: Modified Aliphatic Amine Epoxy Mortar 436: Fiber-Reinforced Modified Polyamine Epoxy 435: Micro-Fiber Reinforced, Modified Polyamine Epoxy
Surfaces:	Field applied to existing manholes. Coat all of interior of existing concrete, brick, and block manholes, including channels and interfacing pipe joints.
Color:	Gray or Beige
Compressive Strength:	No Less than 8,866 psi (6.13 MPa) compressive strength, average of five tests.
Tensile Strength:	No less than 2,940 psi (20.3 MPa) tensile strength.
Tensile Modulus of Elasticity (ASTM D2370)	No less than 6,753 psi (46.6 MPa) tensile modulus of elasticity.
Service Condition:	**Non-potable, anaerobic wastewater environments with moderate to severe H_2S concentrations (Immersion & Headspace).**
Surface Preparation:	Abrasive blast or mechanically abrade in accordance with SSPC-SP13/NACE No. 6 to remove all existing coatings and provide a minimum ICRI CSP 5 surface profile. Surface must be clean, dry, and contaminant-free prior to coating. Cementitious surfaces with a pH less than 9 shall not be considered "contaminant-free".
Repair Materials:	Tnemec Series 218 at a nominal 1/8" and as needed to bring surfaces to level. Series 217 may also be used for deeper repairs (See Application Guide for details).
Environmental Controls:	Substrate temperature should be at least 5°F above the dew point. Refer to

	manufacturer's latest written recommendations for additional guidance.
Application:	Refer to Tnemec Product Data Sheets and Application Guides for latest storage, equipment, and application recommendations. Refer to Tnemec's Perma-Shield Details Guide for construction details.
Curing:	Maximum recoat window is 7 days. Cure for 2 days (at 75°F) prior to placing into service.
Thickness:	Body Coat (Option 1) Series 434: Nominal 1/8", or 125.0 mils thickness. Body Coat (Option 2) Series 436: Nominal 1/8", or 125.0 mils thickness. Glaze Coat Series 435: 15.0 – 20.0 mils.
Cleanup:	Tnemec's #4 thinner or MEK.
Abrasion Resistance	No more than 72 mg loss after 1,000 cycles, average of three tests.
Severe Wastewater Analysis Test (ASTM G210)	Series 434: Initial impedance of 10.6 log-Z at 0.01 Hz (ohms cm²). No blistering, cracking, checking or delamination. No less than 86.7% retention or not more than 1.4 ohms cm² reduction in log-Z electrochemical impedance at 0.01 Hz after 28 days exposure. No loss of adhesion after 28 days in S.W.A.T., average of three tests. Series 436: Initial impedance of 10.2 log-Z at 0.01 Hz (ohms cm²). No blistering, cracking, checking or delamination. No less than 83.7% retention or not more than 1.6 ohms cm² reduction in log-Z electrochemical impedance at 0.01 Hz after 28 days exposure. Series 435: Initial impedance of 12.46 log-Z at 0.01 Hz (ohms cm²). No blistering, cracking, checking or delamination. No less than 84.3% retention and no more than 1.95 ohms cm² reduction in electrochemical impedance after 28 days exposure. No less than 93% loss of tensile adhesion after 28 days in S.W.A.T. average of three tests.
Inspection Check Points:	See the subsection headed "Quality Assurance/Quality Control" in this Section of the Technical Specifications. Check Points 1 through 10.

Product G

Manufacturer:	GML Coatings, LLC. 10315 Technology Terrace, Bradenton FL 34211 (941) 755-2176, GMLCOATINGS.COM
Product Name:	Green Monster Liner Structural
Qualifications:	Coating shall be manufactured by GML Coatings, LLC., or pre-approved equal. The completed system shall provide a waterproof, corrosion resistant liner to prevent any deterioration of concrete surfaces from hydrogen sulfide and other corrosive gases/acids produced by wastewater and to prevent infiltration. **To ensure total unit responsibility, all materials and installation thereof shall be approved and furnished by, and coordinated with, GML Coatings LLC.**
Material Classification:	Green Monster Liner Structural is a two component, 100% solids, zero VOC, polyurethane hybrid, structural coating.
Surfaces:	Existing and new concrete or brick manholes, lift stations, WWTP infrastructures, metals, and fiberglass.
Color:	Light Green
Tensile Strength:	4,500 psi per ASTM D412

Flexural Modulus	>80,000 per ASTM D729
Bond (without primer):	>480 psi per ASTM D 4541 (Substrate failure) concrete >3000 psi per ASTM D 4541 (Substrate failure) carbon steel
Service Condition:	Manholes, Wetwells, WWTP
Surface Preparation:	For optimum performance, concrete should be hydro blasted and/or sandblasted. Concrete that has been adhesion tested and approved to be compatible with **Green Monster Liner Structural** should have cured completely and show a pH of 11 or lower and heated with indirect heat before priming and coating.
Repair Materials:	Remove the portion that is damaged, clean concrete behind damaged liner, prepare surrounding liner for application, apply new liner.
Environmental Controls:	Bypass wastewater as needed, provide heaters, and ventilation
Application:	Surface temperature shall be decreasing while applying liner. Surface moisture content shall be 2% or less, (RH humidity chart will allow higher reading). Prior to application of material, make sure that there is no loose dust, dirt, grease, petrochemicals, or any material that will interfere with the bonding process. For maximum adhesion, Green Monster Liner Structural should always be applied over Green Monster Primer. After following the proper steps according to the GML System Specs, Green Monster Liner Structural should be applied in a cross directional method. It is very important to maintain constant pressure while spraying. A radical variation of these pressures can result in a loss of physical properties, poor color retention, bubbling and de-bonding of the material from the surface applied to. Hose temperature should maintain a minimum temperature of 155°F.
Thickness:	It is recommended to apply Green Monster Liner Structural at a minimum thickness of 125 mils to an unlimited build thickness. Standard application thickness for manholes and lift stations is 250 mils.
Cleanup:	Cured product may be disposed of without restriction. The uncured isocyanate and resin portions should be disposed of according to local, state, and federal laws.
Inspection Check Points:	See the subsection headed "Quality Assurance/Quality Control" in this Section of the Technical Specifications. Check Points 1 through 10.

Product H

Manufacturer:	Raven Lining Systems 686 S. Adams St. Kansas City, KS. 66105 (913) 321-9000
Product Name:	Raven 405
Qualifications:	Applicator shall be trained and certified by the manufacturer as qualified to apply the specified coating.
Material Classification:	100% solids, ultra-high build, solvent-free epoxy coating
Surfaces:	Field applied to existing manholes. Coat all of interior of existing concrete, brick, and block manholes, including channels and interfacing pipe joints.
Color:	Light blue
Compressive Strength:	18,000 psi per ASTM D695
Tensile Strength:	>9000 psi per ASTM D638
Flexural Strength:	15,000 psi per ASTM D790

Shrinkage @ 90% RH:	Per manufacturer
Bond:	Shall exceed tensile strength of substrate
Low-Temp. Flexibility:	Per manufacturer, per ASTM D1790
Density:	Per manufacturer.
Service Condition:	Immersed, non-potable, non-immersed, domestic wastewater, corrosive environment, interior and exterior water pressure, traffic areas.
Surface Preparation:	Per TDS
Repair Materials:	Patching grout, infiltration control grout, and any other repair materials shall comply with the recommendations of the manufacture.
Environmental Controls:	Per manufacturer
Design:	Shall be designed to withstand the hydraulic load generated by the groundwater table. All structures shall be coated with 125 mils Raven 405 un structure is more than 60 ft below water table.
Application:	Shall be applied per manufacturer's application guidelines.
Curing:	Flow can continue after 3 to 6 hours depending on environmental conditions.
Thickness:	Per manufacturer's design. 125 mils minimum thickness.
Tolerances:	Plus 20 mils or minus 10 mils.
Cleanup:	Per manufacturer
Inspection Check Points:	See the subsection headed "Quality Assurance/Quality Control" in this Section of the Technical Specifications. Check Points 1 through 10.

END OF SECTION

THIS PAGE INTENTIONALLY LEFT BLANK

CITY OF ST. PETE BEACH					
WASTEWATER SYSTEM REHABILITATION SERVICES					
ITEM	DESCRIPTION	QTY	UNIT	UNIT PRICE	AMOUNT
MANHOLE REHABILITATION					
1	Mobilization	1	EA		$ -
2	Flagmen (Per-Flagmen)	20	HR		$ -
3	Multi Lane, Lane Closures (FDOT Index No. 613)	10	EA/DY		$ -
4	Multi Lane, Intersection (FDOT Index No. 615)	10	EA/DY		$ -
5	Arrow Boards - 5' Minimum Horizontal Size	10	EA/DY		$ -
6	Variable Message Board	10	EA/DY		$ -
7	Concrete Barrier (FDOT Index No. 100)	10	EA/DY		$ -
8	Low Profile Barrier (FDOT Index No. 120)	10	EA/DY		$ -
9	Signs in Work Zones	10	EA/DY		$ -
10	6" Solid line Thermo Plastic - Permanent	200	LF		$ -
11	24" Stop Bar, Solid, Thermo Plastic, Perm.	200	LF		$ -
12	6" Skip line (6'-10' Skip) Thermo Plastic-Perm.	200	LF		$ -
13	Barricades Type III, with Warning Lights	1000	EA/DY		$ -
14	Barricades Type I or II, with Warning Lights	1000	EA/DY		$ -
15	Repair Manhole Bench and Channel	10	EA		$ -
16	Repair Chimney, Adjust/Replace MH Casting- Unpaved	10	EA		$ -
17	Repair Chimney, Adjust/Replace MH Casting- Asphalt Pavement	100	EA		$ -
18	Rebuild Corbel/Chimney for Type B Manhole Casting	10	EA		$ -
19	Furnish Manhole Casting - Type B	10	EA		$ -
20	Furnish Manhole Casting - Type E	30	EA		$ -
21	Severe Manhole Infiltration Elimination	10	EA		$ -
22	Chemical Sealing - Grout	50	GAL		$ -
23	Internal Chimney Sealant - Type B Manhole Casing	5	EA		$ -
24	Internal Chimney Sealant - Type E Manhole Casing	10	EA		$ -
25	Additional Access Cost for Manhole Coating	10	EA		$ -
26	Bypass Pumping Setup - 6-10" diameter	5	EA		$ -
27	Bypass Pumping Setup - 12" -14" diameter	20	EA		$ -
28	Bypass Pumping Setup - 15" to 21" diameter	10	EA		$ -
29	Bypass Pumping Setup - 24" diameter	5	EA		$ -
30	Bypass Pumping Operation - 6"-10" diameter	10	DAY		$ -
31	Bypass Pumping Operation - 12"-14" diameter	50	DAY		$ -
32	Bypass Pumping Operation - 15" to 21" diameter	25	DAY		$ -
33	Bypass Pumping Operation - 24" diameter	15	DAY		$ -
34	Pure Calcium Aluminate Cementitious MH Coating - 48" diameter, Initial	50	EA		$ -
35	Pure Calcium Aluminate Cementitious MH Coating - 60" diameter, Initial	10	EA		$ -
36	Pure Calcium Aluminate Cementitious MH Coating - 72" diameter, Initial	5	EA		$ -
37	Pure Calcium Aluminate Cementitious MH Coating - 48" diameter, Additional	250	VF		$ -
38	Pure Calcium Aluminate Cementitious MH Coating - 60" diameter, Additional	50	VF		$ -
39	Pure Calcium Aluminate Cementitious MH Coating - 72" diameter, Additional	25	VF		$ -
40	Reinforced Polymer MH Coating - 48" diameter, Initial	5	EA		$ -
41	Reinforced Polymer MH Coating - 60" diameter, Initial	5	EA		$ -
42	Reinforced Polymer MH Coating - 72" diameter, Initial	5	EA		$ -
43	Reinforced Polymer MH Coating - 48" diameter, Additional	25	VF		$ -
44	Reinforced Polymer MH Coating - 60" diameter, Additional	25	VF		$ -
45	Reinforced Polymer MH Coating - 72" diameter, Additional	25	VF		$ -
46	Concrete Curb Replacement - Type D	100	LF		$ -
47	Concrete Curb Replacement - Type F	100	LF		$ -
48	Concrete Curb Replacement - Miami Curb	100	LF		$ -
49	Concrete Sidewalk Replacement - 4" Thick	50	SY		$ -
50	Concrete Sidewalk Replacement - 6" Thick	50	SY		$ -
51	Concrete Driveway Replacement - 4" Thick	50	SY		$ -
52	Concrete Driveway Replacement - 6" Thick	50	SY		$ -
53	Inflow Dish	100	EA		$ -
				SUBTOTAL - MANHOLE REHABILITATION	$ -
PIPE LINING					
1	Mobilization	1	EA		$ -
2	Flagmen (Per-Flagmen)	20	HR		$ -
3	Multi Lane, Lane Closures (FDOT Index No. 613)	10	EA/DY		$ -
4	Multi Lane, Intersection (FDOT Index No. 615)	10	EA/DY		$ -

5	Arrow Boards - 5' Minimum Horizontal Size	10	EA/DY		$	-
6	Variable Message Board	10	EA/DY		$	-
7	Concrete Barrier (FDOT Index No. 100)	10	EA/DY		$	-
8	Low Profile Barrier (FDOT Index No. 120)	10	EA/DY		$	-
9	Signs in Work Zones	10	EA/DY		$	-
10	6" Solid line Thermo Plastic - Permanent	200	LF		$	-
11	24" Stop Bar, Solid, Thermo Plastic, Perm.	200	LF		$	-
12	6" Skip line (6'-10' Skip) Thermo Plastic-Perm.	200	LF		$	-
13	Barricades Type III, with Warning Lights	1000	EA/DY		$	-
14	Barricades Type I or II, with Warning Lights	1000	EA/DY		$	-
15	CIPP Main Liner 6" Diameter - 4.5 mm thickness	1100	LF		$	-
16	CIPP Main Liner 8" Diameter - 6.0 mm thickness	72200	LF		$	-
17	CIPP Main Liner 10" Diameter - 6.0 mm thickness	3600	LF		$	-
18	CIPP Main Liner 12" Diameter - 6.0 mm thickness	2400	LF		$	-
19	CIPP Main Liner 15" Diameter - 7.5 mm thickness	1500	LF		$	-
20	CIPP Main Liner 18" Diameter - 9.0 mm thickness	1800	LF		$	-
21	CIPP Main Liner 21" Diameter - 9.0 mm thickness	2900	LF		$	-
22	CIPP Main Liner 24" Diameter - 10.5 mm thickness	3800	LF		$	-
23	CIPP Main Liner 6" Diameter - Thickness Variance + 1.5mm	300	LF		$	-
24	CIPP Main Liner 8" Diameter - Thickness Variance + 1.5mm	5000	LF		$	-
25	CIPP Main Liner 10" Diameter - Thickness Variance + 1.5mm	1000	LF		$	-
26	CIPP Main Liner 12" Diameter - Thickness Variance + 1.5mm	1000	LF		$	-
27	CIPP Main Liner 15" Diameter - Thickness Variance + 1.5mm	300	LF		$	-
28	CIPP Main Liner 18" Diameter - Thickness Variance + 1.5mm	300	LF		$	-
29	CIPP Main Liner 21" Diameter - Thickness Variance + 1.5mm	300	LF		$	-
30	CIPP Main Liner 24" Diameter - Thickness Variance + 1.5mm	300	LF		$	-
31	Bypass Pumping Setup - 6-10" diameter	5	EA		$	-
32	Bypass Pumping Setup - 12" -14" diameter	45	EA		$	-
33	Bypass Pumping Setup - 15" to 21" diameter	20	EA		$	-
34	Bypass Pumping Setup - 24" diameter	5	EA		$	-
35	Bypass Pumping Operation - 6"-10" diameter	10	DAY		$	-
36	Bypass Pumping Operation - 12"-14" diameter	90	DAY		$	-
37	Bypass Pumping Operation - 15" to 21" diameter	40	DAY		$	-
38	Bypass Pumping Operation - 24" diameter	10	DAY		$	-
39	Normal Cleaning - 6" and 8" diameter	73300	LF		$	-
40	Normal Cleaning - 10" and 12" diameter	6000	LF		$	-
41	Normal Cleaning - 15" and 18" diameter	3300	LF		$	-
42	Normal Cleaning - 21" and 24" diameter	6700	LF		$	-
43	Specialty Cleaning - 6" and 8" diameter	1000	LF		$	-
44	Specialty Cleaning - 10" and 12" diameter	100	LF		$	-
45	Specialty Cleaning - 15" and 18" diameter	50	LF		$	-
46	Specialty Cleaning - 21" and 24" diameter	100	LF		$	-
47	Chemical Sealing of Host Pipe - 10" diameter and less	30	EA		$	-
48	Chemical Sealing of Host Pipe - 12" and 15" diameter	10	EA		$	-
49	Chemical Sealing of Host Pipe - 18" to 24" diameter	5	EA		$	-
50	Chemical Sealing - Grout	100	GAL		$	-
51	Removal & Sealing of Protruding Service Connections	25	EA		$	-
52	Additional Access Cost Main Liner	25	EA		$	-
53	Service Reconnection	200	EA		$	-
54	CIPP Liner Testing	5	EA		$	-
55	Lateral Grouting	10	EA		$	-
				SUBTOTAL - PIPE LINING	$	-
POINT REPAIRS						
1	Mobilization for Routine Response	20	EA		$	-
2	Mobilization for Emergency Response	6	EA		$	-
3	Flagmen (Per-Flagmen)	20	HR		$	-
4	Multi Lane, Lane Closures (FDOT Index No. 613)	5	EA/DY		$	-
5	Multi Lane, Intersection (FDOT Index No. 615)	5	EA/DY		$	-
6	Arrow Boards - 5' Minimum Horizontal Size	10	EA/DY		$	-
7	Variable Message Board	10	EA/DY		$	-
8	Concrete Barrier (FDOT Index No. 415)	10	EA/DY		$	-
9	Low Profile Barrier (FDOT Index No. 412)	10	EA/DY		$	-
10	Signs in Work Zones	10	EA/DY		$	-

11	6" Solid line Thermo Plastic - Permanent	200	LF		$	-
12	24" Stop Bar, Solid, Thermo Plastic, Perm.	200	LF		$	-
13	6" Skip line (6'-10' Skip) Thermo Plastic-Perm.	200	LF		$	-
14	Barricades Type III, with Warning Lights	1000	EA/DY		$	-
15	Barricades Type I or II, with Warning Lights	1000	EA/DY		$	-
16	As-Built Survey	5	EA		$	-
17	Excavation, Unsuitable Material	100	CY		$	-
18	Sheeting & Bracing (Left in Place)	500	SF		$	-
19	Sheeting & Bracing, Pipe Trenches (Removed)	2500	SF		$	-
20	Well Point Dewatering Initial - 6'-8' Deep	10	EA		$	-
21	Well Point Dewatering Initial - 8'-10' Deep	10	EA		$	-
22	Well Point Dewatering Initial - 10'-12' Deep	5	EA		$	-
23	Well Point Dewatering Initial - 12'-14' Deep	5	EA		$	-
24	Well Point Dewatering Initial - 14'-16' Deep	3	EA		$	-
25	Well Point Dewatering Initial - > 16' Deep	3	EA		$	-
26	Well Point Dewatering Additional - 6'-8' Deep	200	EA		$	-
27	Well Point Dewatering Additional - 8'-10' Deep	200	EA		$	-
28	Well Point Dewatering Additional - 10'-12' Deep	100	EA		$	-
29	Well Point Dewatering Additional - 12'-14' Deep	100	EA		$	-
30	Well Point Dewatering Additional - 14'-16' Deep	50	EA		$	-
31	Well Point Dewatering Additional - > 16' Deep	50	EA		$	-
32	Jack & Bore 12" x .188" Steel Casing (6" GS)	40	LF		$	-
33	Jack & Bore 16" x .219" Steel Casing (8" GS)	40	LF		$	-
34	Jack & Bore 20" x .250" Steel Casing (10" GS)	40	LF		$	-
35	Jack & Bore 24" x .281" Steel Casing (12" GS)	40	LF		$	-
36	2" Directional Drill HDPE DR 9, IPS OD	200	LF		$	-
37	4" Directional Drill HDPE DR 11, DIPS OD	300	LF		$	-
38	6" Directional Drill HDPE DR 11, DIPS OD	500	LF		$	-
39	8" Directional Drill HDPE DR 11, DIPS OD	500	LF		$	-
40	10" Directional Drill HDPE DR 11, DIPS OD	500	LF		$	-
41	12" Directional Drill HDPE DR 11, DIPS OD	300	LF		$	-
42	6" PVC Pipe, C-900 DR 18 (Gravity Sewer) 0' - 6' Depth	100	LF		$	-
43	6" PVC Pipe, C-900 DR 18 (Gravity Sewer) 6' - 8' Depth	200	LF		$	-
44	6" PVC Pipe, C-900 DR 18 (Gravity Sewer) 8' - 10' Depth	100	LF		$	-
45	6" PVC Pipe, C-900 DR 18 (Gravity Sewer) 10' - 12' Depth	50	LF		$	-
46	6" PVC Pipe, C-900 DR 18 (Gravity Sewer) 12' - 14' Depth	50	LF		$	-
47	6" PVC Pipe, C-900 DR 18 (Gravity Sewer) 14' - 16' Depth	50	LF		$	-
48	6" PVC Pipe, C-900 DR 18 (Gravity Sewer) 16' - 18' Depth	50	LF		$	-
49	8" DI Pipe, CL 350 (Gravity Sewer) 0' - 6' Depth	50	LF		$	-
50	8" DI Pipe, CL 350 (Gravity Sewer) 6' - 8' Depth	100	LF		$	-
51	8" DI Pipe, CL 350 (Gravity Sewer) 8' - 10' Depth	100	LF		$	-
52	8" DI Pipe, CL 350 (Gravity Sewer) 10' - 12' Depth	50	LF		$	-
53	8" DI Pipe, CL 350 (Gravity Sewer) 12' - 14' Depth	50	LF		$	-
54	8" DI Pipe, CL 350 (Gravity Sewer) 14' - 16' Depth	50	LF		$	-
55	8" DI Pipe, CL 350 (Gravity Sewer) 16' - 18' Depth	50	LF		$	-
56	8" PVC Pipe, C-900 DR 18 (Gravity Sewer) 0' - 6' Depth	200	LF		$	-
57	8" PVC Pipe, C-900 DR 18 (Gravity Sewer) 6' - 8' Depth	400	LF		$	-
58	8" PVC Pipe, C-900 DR 18 (Gravity Sewer) 8' - 10' Depth	400	LF		$	-
59	8" PVC Pipe, C-900 DR 18 (Gravity Sewer) 10' - 12' Depth	400	LF		$	-
60	8" PVC Pipe, C-900 DR 18 (Gravity Sewer) 12' - 14' Depth	400	LF		$	-
61	8" PVC Pipe, C-900 DR 18 (Gravity Sewer) 14' - 16' Depth	200	LF		$	-
62	8" PVC Pipe, C-900 DR 18 (Gravity Sewer) 16' - 18' Depth	200	LF		$	-
63	10" DI Pipe, CL 350 (Gravity Sewer) 0' - 6' Depth	50	LF		$	-
64	10" DI Pipe, CL 350 (Gravity Sewer) 6' - 8' Depth	100	LF		$	-
65	10" DI Pipe, CL 350 (Gravity Sewer) 8' - 10' Depth	100	LF		$	-
66	10" DI Pipe, CL 350 (Gravity Sewer) 10' - 12' Depth	50	LF		$	-
67	10" DI Pipe, CL 350 (Gravity Sewer) 12' - 14' Depth	50	LF		$	-
68	10" DI Pipe, CL 350 (Gravity Sewer) 14' - 16' Depth	50	LF		$	-
69	10" DI Pipe, CL 350 (Gravity Sewer) 16' - 18' Depth	50	LF		$	-
70	10" PVC Pipe, C-900 DR 18 (Gravity Sewer) 0' -6' Depth	100	LF		$	-
71	10" PVC Pipe, C-900 DR 18 (Gravity Sewer) 6' - 8' Depth	400	LF		$	-
72	10" PVC Pipe, C-900 DR 18 (Gravity Sewer) 8' - 10' Depth	400	LF		$	-
73	10" PVC Pipe, C-900 DR 18 (Gravity Sewer) 10' - 12' Depth	400	LF		$	-

74	10" PVC Pipe, C-900 DR 18 (Gravity Sewer) 12' - 14' Depth	400	LF		$	-
75	10" PVC Pipe, C-900 DR 18 (Gravity Sewer) 14' - 16' Depth	200	LF		$	-
76	10" PVC Pipe, C-900 DR 18 (Gravity Sewer) 16' - 18' Depth	200	LF		$	-
77	12" DI Pipe, CL 350 (Gravity Sewer) 0' - 6' Depth	50	LF		$	-
78	12" DI Pipe, CL 350 (Gravity Sewer) 6' - 8' Depth	100	LF		$	-
79	12" DI Pipe, CL 350 (Gravity Sewer) 8' - 10' Depth	100	LF		$	-
80	12" DI Pipe, CL 350 (Gravity Sewer) 10' - 12' Depth	100	LF		$	-
81	12" DI Pipe, CL 350 (Gravity Sewer) 12' - 14' Depth	100	LF		$	-
82	12" DI Pipe, CL 350 (Gravity Sewer) 14' - 16' Depth	50	LF		$	-
83	12" DI Pipe, CL 350 (Gravity Sewer) 16' - 18' Depth	50	LF		$	-
84	12" PVC Pipe, C-900 DR 18 (Gravity Sewer) 0' ' 6' Depth	100	LF		$	-
85	12" PVC Pipe, C-900 DR 18 (Gravity Sewer) 6' - 8' Depth	200	LF		$	-
86	12" PVC Pipe, C-900 DR 18 (Gravity Sewer) 8' - 10' Depth	200	LF		$	-
87	12" PVC Pipe, C-900 DR 18 (Gravity Sewer) 10' - 12' Depth	100	LF		$	-
88	12" PVC Pipe, C-900 DR 18 (Gravity Sewer) 12' - 14' Depth	100	LF		$	-
89	12" PVC Pipe, C-900 DR 18 (Gravity Sewer) 14' - 16' Depth	50	LF		$	-
90	12" PVC Pipe, C-900 DR 18 (Gravity Sewer) 16' - 18' Depth	50	LF		$	-
91	16" DI Pipe, CL 350 (Gravity Sewer) 0' - 6' Depth	200	LF		$	-
92	16" DI Pipe, CL 350 (Gravity Sewer) 6' - 8' Depth	400	LF		$	-
93	16" DI Pipe, CL 350 (Gravity Sewer) 8' - 10' Depth	400	LF		$	-
94	16" DI Pipe, CL 350 (Gravity Sewer) 10' - 12' Depth	200	LF		$	-
95	16" DI Pipe, CL 350 (Gravity Sewer) 12' - 14' Depth	200	LF		$	-
96	16" DI Pipe, CL 350 (Gravity Sewer) 14' - 16' Depth	100	LF		$	-
97	16" DI Pipe, CL 350 (Gravity Sewer) 16' - 18' Depth	100	LF		$	-
98	16" PVC Pipe, C-905 DR 18 (Gravity Sewer) 0' - 6' Depth	100	LF		$	-
99	16" PVC Pipe, C-905 DR 18 (Gravity Sewer) 6' - 8' Depth	200	LF		$	-
100	16" PVC Pipe, C-905 DR 18 (Gravity Sewer) 8' - 10' Depth	200	LF		$	-
101	16" PVC Pipe, C-905 DR 18 (Gravity Sewer) 10' - 12' Depth	100	LF		$	-
102	16" PVC Pipe, C-905 DR 18 (Gravity Sewer) 12' - 14' Depth	100	LF		$	-
103	16" PVC Pipe, C-905 DR 18 (Gravity Sewer) 14' - 16' Depth	50	LF		$	-
104	16" PVC Pipe, C-905 DR 18 (Gravity Sewer) 16' - 18' Depth	50	LF		$	-
105	18" DI Pipe, CL 350 (Gravity Sewer) 0' - 6' Depth	200	LF		$	-
106	18" DI Pipe, CL 350 (Gravity Sewer) 6' - 8' Depth	400	LF		$	-
107	18" DI Pipe, CL 350 (Gravity Sewer) 8' - 10' Depth	400	LF		$	-
108	18" DI Pipe, CL 350 (Gravity Sewer) 10' - 12' Depth	200	LF		$	-
109	18" DI Pipe, CL 350 (Gravity Sewer) 12' - 14' Depth	200	LF		$	-
110	18" DI Pipe, CL 350 (Gravity Sewer) 14' - 16' Depth	100	LF		$	-
111	18" DI Pipe, CL 350 (Gravity Sewer) 16' - 18' Depth	100	LF		$	-
112	18" PVC Pipe, C-905 DR 21 (Gravity Sewer) 0' - 6' Depth	100	LF		$	-
113	18" PVC Pipe, C-905 DR 21 (Gravity Sewer) 6' - 8' Depth	200	LF		$	-
114	18" PVC Pipe, C-905 DR 21 (Gravity Sewer) 8' - 10' Depth	200	LF		$	-
115	18" PVC Pipe, C-905 DR 21 (Gravity Sewer) 10' - 12' Depth	100	LF		$	-
116	18 PVC Pipe, C-905 DR 21 (Gravity Sewer) 12' - 14' Depth	100	LF		$	-
117	18" PVC Pipe, C-905 DR 21 (Gravity Sewer) 14' - 16' Depth	50	LF		$	-
118	18" PVC Pipe, C-905 DR 21 (Gravity Sewer) 16' - 18' Depth	50	LF		$	-
119	21" DI Pipe, CL 350 (Gravity Sewer) 0' - 6' Depth	200	LF		$	-
120	21" DI Pipe, CL 350 (Gravity Sewer) 6' - 8' Depth	400	LF		$	-
121	21" DI Pipe, CL 350 (Gravity Sewer) 8' - 10' Depth	400	LF		$	-
122	21" DI Pipe, CL 350 (Gravity Sewer) 10' - 12' Depth	200	LF		$	-
123	21" DI Pipe, CL 350 (Gravity Sewer) 12' - 14' Depth	200	LF		$	-
124	21" DI Pipe, CL 350 (Gravity Sewer) 14' - 16' Depth	100	LF		$	-
125	21" DI Pipe, CL 350 (Gravity Sewer) 16' - 18' Depth	100	LF		$	-
126	21" PVC Pipe, C-905 DR 21 (Gravity Sewer) 0' - 6' Depth	100	LF		$	-
127	21" PVC Pipe, C-905 DR 21 (Gravity Sewer) 6' - 8' Depth	200	LF		$	-
128	21" PVC Pipe, C-905 DR 21 (Gravity Sewer) 8' - 10' Depth	200	LF		$	-
129	21" PVC Pipe, C-905 DR 21 (Gravity Sewer) 10' - 12' Depth	100	LF		$	-
130	21" PVC Pipe, C-905 DR 21 (Gravity Sewer) 12' - 14' Depth	100	LF		$	-
131	21" PVC Pipe, C-905 DR 21 (Gravity Sewer) 14' - 16' Depth	50	LF		$	-
132	21" PVC Pipe, C-905 DR 21 (Gravity Sewer) 16' - 18' Depth	50	LF		$	-
133	24" DI Pipe, CL 350 (Gravity Sewer) 0' - 6' Depth	200	LF		$	-
134	24" DI Pipe, CL 350 (Gravity Sewer) 6' - 8' Depth	400	LF		$	-
135	24" DI Pipe, CL 350 (Gravity Sewer) 8' - 10' Depth	400	LF		$	-
136	24" DI Pipe, CL 350 (Gravity Sewer) 10' - 12' Depth	200	LF		$	-

137	24" DI Pipe, CL 350 (Gravity Sewer) 12' - 14' Depth	200	LF		$	-
138	24" DI Pipe, CL 350 (Gravity Sewer) 14' - 16' Depth	100	LF		$	-
139	24" DI Pipe, CL 350 (Gravity Sewer) 16' - 18' Depth	100	LF		$	-
140	24" PVC Pipe, C-905 DR 21 (Gravity Sewer) 0' - 6' Depth	100	LF		$	-
141	24" PVC Pipe, C-905 DR 21 (Gravity Sewer) 6' - 8' Depth	200	LF		$	-
142	24" PVC Pipe, C-905 DR 21 (Gravity Sewer) 8' - 10' Depth	200	LF		$	-
143	24" PVC Pipe, C-905 DR 21 (Gravity Sewer) 10' - 12' Depth	100	LF		$	-
144	24" PVC Pipe, C-905 DR 21 (Gravity Sewer) 12' - 14' Depth	100	LF		$	-
145	24" PVC Pipe, C-905 DR 21 (Gravity Sewer) 14' - 16' Depth	50	LF		$	-
146	24" PVC Pipe, C-905 DR 21 (Gravity Sewer) 16' - 18' Depth	50	LF		$	-
147	Install PVC Cleanout	10	EA		$	-
148	Replace PVC Cleanout with Manhole Structure	10	EA		$	-
149	Remove Pipe 2" or 4" (Gravity Sewer)	200	LF		$	-
150	Remove Pipe 6" or 8" (Gravity Sewer)	400	LF		$	-
151	Remove Pipe 10" or 12" (Gravity Sewer)	400	LF		$	-
152	Remove Pipe 15", 16" or 18" (Gravity Sewer)	200	LF		$	-
153	Remove Pipe 21" or 24" (Gravity Sewer)	200	LF		$	-
154	4" Pipe - Install or Adjust Service Lateral 0'-6' Deep	3	EA		$	-
155	4" Pipe - Install or Adjust Service Lateral 6'-8' Deep	3	EA		$	-
156	4" Pipe - Install or Adjust Service Lateral 8'-10' Deep	3	EA		$	-
157	4" Pipe - Install or Adjust Service Lateral 10'-12'Deep	3	EA		$	-
158	4" Pipe - Install or Adjust Service Lateral 12'-14'Deep	2	EA		$	-
159	4" Pipe - Install or Adjust Service Lateral 14'-16'Deep	2	EA		$	-
160	4" Pipe - Install or Adjust Service Lateral 16'-18' Deep	2	EA		$	-
161	6" Pipe - Install or Adjust Service Lateral 0'-6' Deep	3	EA		$	-
162	6" Pipe - Install or Adjust Service Lateral 6'-8' Deep	3	EA		$	-
163	6" Pipe - Install or Adjust Service Lateral 8'-10' Deep	3	EA		$	-
164	6" Pipe - Install or Adjust Service Lateral 10'-12' Deep	3	EA		$	-
165	6" Pipe - Install or Adjust Service Lateral 12'-14' Deep	2	EA		$	-
166	6" Pipe - Install or Adjust Service Lateral 14'-16' Deep	2	EA		$	-
167	6" Pipe - Install or Adjust Service Lateral 16'-18' Deep	2	EA		$	-
168	2" Sewer Line Manhole Connection	3	EA		$	-
169	4" Sewer Line Manhole Connection	3	EA		$	-
170	6" Sewer Line Manhole Connection	5	EA		$	-
171	8" Sewer Line Manhole Connection	5	EA		$	-
172	10" Sewer Line Manhole Connection	3	EA		$	-
173	12" Sewer Line Manhole Connection	3	EA		$	-
174	16" Sewer Line Manhole Connection	3	EA		$	-
175	18" Sewer Line Manhole Connection	2	EA		$	-
176	21” Sewer Line Manhole Connection	2	EA		$	-
177	24” Sewer Line Manhole Connection	2	EA		$	-
178	2" Inside Drop Connection	3	EA		$	-
179	4" Inside Drop Connection	3	EA		$	-
180	6" Inside Drop Connection	3	EA		$	-
181	8" Inside Drop Connection	5	EA		$	-
182	10" Inside Drop Connection	3	EA		$	-
183	12" Inside Drop Connection	3	EA		$	-
184	15"/16" Inside Drop Connection	3	EA		$	-
185	18" Inside Drop Connection	2	EA		$	-
186	21" Inside Drop Connection	3	EA		$	-
187	24" Inside Drop Connection	2	EA		$	-
188	Grouting Out of Service Pipe (Force Main)	30	CY		$	-
189	Disconnect & Plug 2" or 4" Pipe	5	EA		$	-
190	Disconnect & Plug 6" or 8" Pipe	5	EA		$	-
191	Disconnect & Plug 10" or 12" Pipe	5	EA		$	-
192	2" PVC Restrained Joint Pipe & Fittings FM, SDR 21	200	LF		$	-
193	4" PVC Pipe, C-900 DR 18 (Force Main)	500	LF		$	-
194	4" PVC Restrained Joint Pipe & Fittings FM, C-900 DR 18	100	LF		$	-
195	6" PVC Pipe, C-900 DR 18 (Force Main)	500	LF		$	-
196	6" PVC Restrained Joint Pipe & Fittings FM, C-900 DR 18	100	LF		$	-
197	8" PVC Pipe, C-900 DR 18 (Force Main)	500	LF		$	-
198	8" PVC Restrained Joint Pipe & Fittings FM, C-900 DR 18	100	LF		$	-
199	10" PVC Pipe, C-900 DR 18 (Force Main)	500	LF		$	-

200	10" PVC Restrained Joint Pipe & Fittings FM, C-900 DR 18	100	LF		$	-
201	12" PVC Pipe, C-900 DR 18 (Force Main)	300	LF		$	-
202	12" PVC Restrained Joint Pipe & Fittings FM, C-900 DR 18	100	LF		$	-
203	2" Restrained Joints	20	EA		$	-
204	4" Restrained Joints	20	EA		$	-
205	6" Restrained Joints	20	EA		$	-
206	8" Restrained Joints	20	EA		$	-
207	10" Restrained Joints	20	EA		$	-
208	12" Restrained Joints	20	EA		$	-
209	2"-4" Forcemain Pipe and Appurtenances - Over Depth Excavation	400	LF		$	-
210	6"-8" Forcemain Pipe and Appurtenances - Over Depth Excavation	500	LF		$	-
211	10"-12" Forcemain Pipe and Appurtenances - Over Depth Excavation	200	LF		$	-
212	Remove Out of Service Pipe 2" or 4" (Force Main)	500	LF		$	-
213	Remove Out of Service Pipe 6" or 8" (Force Main)	1000	LF		$	-
214	Remove Out of Service Pipe 10" or 12" (Force Main)	500	LF		$	-
215	2" Sleeved Connection	6	EA		$	-
216	4" Sleeved Connection	6	EA		$	-
217	6" Sleeved Connection	10	EA		$	-
218	8" Sleeved Connection	10	EA		$	-
219	10" Sleeved Connection	4	EA		$	-
220	12" Sleeved Connection	4	EA		$	-
221	Reverse Deadman for 2" or 4" Pipe	3	EA		$	-
222	Reverse Deadman for 6" or 8" Pipe	5	EA		$	-
223	Reverse Deadman for 10" or 12" Pipe	3	EA		$	-
224	DI Fittings FM C 153 (Compact Body)	2	TN		$	-
225	2" Air Release Assembly (In-line)	2	EA		$	-
226	2" Air Release Assembly (Offset)	2	EA		$	-
227	2" RWGV (Resilient Wedge Gate Valve) & Box	4	EA		$	-
228	4" RWGV & Box C 515	4	EA		$	-
229	6" RWGV & Box C 515	10	EA		$	-
230	8" RWGV & Box C 515	5	EA		$	-
231	10" RWGV & Box C 515	2	EA		$	-
232	12" RWGV & Box C 515	2	EA		$	-
233	Adjust Valve Box to Finished Grade (In Pavement)	5	EA		$	-
234	Adjust Valve Box to Finished Grade (Outside of Pavement)	5	EA		$	-
235	4" Line Stop	1	EA		$	-
236	6" Line Stop	1	EA		$	-
237	8" Line Stop	1	EA		$	-
238	10" Line Stop	1	EA		$	-
239	12" Line Stop	1	EA		$	-
240	4" x 2" Tapping Saddle Valve & Box	2	EA		$	-
241	4" x 4" Tapping Sleeve Valve & Box	2	EA		$	-
242	6" x 2" Tapping Saddle Valve & Box	2	EA		$	-
243	6" x 4" Tapping Sleeve Valve & Box	2	EA		$	-
244	6" x 6" Tapping Sleeve Valve & Box	2	EA		$	-
245	8" x 2" Tapping Saddle Valve & Box	2	EA		$	-
246	8" x 4" Tapping Sleeve Valve & Box	2	EA		$	-
247	8" x 6" Tapping Sleeve Valve & Box	2	EA		$	-
248	8" x 8" Tapping Sleeve Valve & Box	2	EA		$	-
249	10" x 2" Tapping Saddle Valve & Box	2	EA		$	-
250	10" x 4" Tapping Sleeve Valve & Box	2	EA		$	-
251	10" x 6" Tapping Sleeve Valve & Box	2	EA		$	-
252	10" x 8" Tapping Sleeve Valve & Box	2	EA		$	-
253	10" x 10" Tapping Sleeve Valve & Box	2	EA		$	-
254	12" x 2" Tapping Saddle Valve & Box	2	EA		$	-
255	12" x 4" Tapping Sleeve Valve & Box	2	EA		$	-
256	12" x 6" Tapping Sleeve Valve & Box	2	EA		$	-
257	12" x 8" Tapping Sleeve Valve & Box	2	EA		$	-
258	12" x 10" Tapping Sleeve Valve & Box	2	EA		$	-
259	12" x 12" Tapping Sleeve Valve & Box	2	EA		$	-
260	4' Dia. - Precast Manhole Standard	30	VF		$	-
261	4' Dia. - Precast Manhole Inside Drop	10	VF		$	-
262	4' Dia. - Precast Manhole Outside Drop	10	VF		$	-

263	5' Dia. - Precast Manhole Standard	30	VF		$	-
264	5' Dia. - Precast Manhole Inside Drop	10	VF		$	-
265	5' Dia. - Precast Manhole Outside Drop	10	VF		$	-
266	5' Dia. - Precast Air Release Manhole	10	VF		$	-
267	6' Dia. - Precast Manhole Standard	30	VF		$	-
268	6' Dia. - Precast Manhole Inside Drop	10	VF		$	-
269	6' Dia. - Precast Manhole Outside Drop	10	VF		$	-
270	Removal of Existing Manhole	3	EA		$	-
271	Remove Existing Manhole Additional	30	VF		$	-
272	Initial Excavation - 0'-6' Deep	5	EA		$	-
273	Initial Excavation - 6'-8' Deep	6	EA		$	-
274	Initial Excavation - 8'-10' Deep	6	EA		$	-
275	Initial Excavation - 10'-12' Deep	6	EA		$	-
276	Initial Excavation - 12'-14' Deep	3	EA		$	-
277	Initial Excavation - 14'-16' Deep	3	EA		$	-
278	Initial Excavation - 16'-18' Deep	2	EA		$	-
279	Initial Excavation - 18'-20' Deep	2	EA		$	-
280	Additional Excavation - 0'-6' Deep	100	LF		$	-
281	Additional Excavation - 6'-8' Deep	100	LF		$	-
282	Additional Excavation - 8'-10' Deep	100	LF		$	-
283	Additional Excavation - 10'-12' Deep	100	LF		$	-
284	Additional Excavation - 12'-14' Deep	100	LF		$	-
285	Additional Excavation - 14'-16' Deep	100	LF		$	-
286	Additional Excavation - 16'-18' Deep	50	LF		$	-
287	Additional Excavation - 18'-20' Deep	50	LF		$	-
288	Wastewater Bypass Pumping, Set up, 6" - 10" diameter	5	EA		$	-
289	Wastewater Bypass Pumping, Set up, 12" - 14" diameter	2	EA		$	-
290	Wastewater Bypass Pumping, Set up, 15" - 21" diameter	2	EA		$	-
291	Wastewater Bypass Pumping, Set up, 24" diameter	2	EA		$	-
292	Wastewater Bypass Pumping, Operation, 6" - 10" diameter	10	DAY		$	-
293	Wastewater Bypass Pumping, Operation, 12" - 14" diameter	5	DAY		$	-
294	Wastewater Bypass Pumping, Operation, 15" - 21" diameter	5	DAY		$	-
295	Wastewater Bypass Pumping, Operation, 24" diameter	2	DAY		$	-
296	6" Dia. Pipe Gravity Sewer Point Repair (DI Replacement Pipe)	2	EA		$	-
297	6" Dia. Pipe Gravity Sewer Point Repair (PVC Replacement Pipe)	5	EA		$	-
298	8" Dia. Pipe Gravity Sewer Point Repair (DI Replacement Pipe)	2	EA		$	-
299	8" Dia. Pipe Gravity Sewer Point Repair (PVC Replacement Pipe)	5	EA		$	-
300	10" Dia. Pipe Gravity Sewer Point Repair (DI Replacement Pipe)	2	EA		$	-
301	10" Dia. Pipe Gravity Sewer Point Repair (PVC Replacement Pipe)	5	EA		$	-
302	12" Dia. Pipe Gravity Sewer Point Repair (DI Replacement Pipe)	2	EA		$	-
303	12" Dia. Pipe Gravity Sewer Point Repair (PVC Replacement Pipe)	5	EA		$	-
304	15"/16" Dia. Pipe Gravity Sewer Point Repair (DI Replacement Pipe)	2	EA		$	-
305	15"/16" Dia. Pipe Gravity Sewer Point Repair (PVC Rplacement Pipe)	2	EA		$	-
306	18" Dia. Pipe Gravity Sewer Point Repair (DI Replacement Pipe)	2	EA		$	-
307	18" Dia. Pipe Gravity Sewer Point Repair (PVC Replacement Pipe)	2	EA		$	-
308	21" Dia. Pipe Gravity Sewer Point Repair (DI Replacement Pipe)	2	EA		$	-
309	21" Dia. Pipe Gravity Sewer Point Repair(PVC Replacement Pipe)	2	EA		$	-
310	24" Dia. Pipe Gravity Sewer Point Repair (DI Replacement Pipe)	2	EA		$	-
311	24" Dia. Pipe Gravity Sewer Point Repair (PVC Replacement Pipe)	2	EA		$	-
312	6" Dia. Pipe Gravity Sewer Point Repair - Additional Length (DI Replacement Pipe)	20	LF		$	-
313	6" Dia. Pipe Gravity Sewer Point Repair - Additional Length (PVC Replacement Pipe)	50	LF		$	-
314	8" Dia. Pipe Gravity Sewer Point Repair - Additional Length (DI Replacement Pipe)	20	LF		$	-
315	8" Dia. Pipe Gravity Sewer Point Repair - Additional Length (PVC Replacement Pipe)	100	LF		$	-
316	10" Dia. Pipe Gravity Sewer Point Repair - Additional Length (DI Replacement Pipe)	20	LF		$	-
317	10" Dia. Pipe Gravity Sewer Point Repair - Additional Length (PVC Replacement Pipe)	100	LF		$	-
318	12" Dia. Pipe Gravity Sewer Point Repair Additional Length (DI Replacement Pipe)	50	LF		$	-
319	12" Dia. Pipe Gravity Sewer Point Repair - Additional Length (PVC Replacement Pipe)	20	LF		$	-
320	15"/16" Dia. Pipe Gravity Sewer Point Repair - Additional Length (DI Replacement Pipe)	20	LF		$	-
321	15"/16" Dia. Pipe Gravity Sewer Point Repair - Additional Length (PVC Replacement Pipe)	50	LF		$	-
322	18" Dia. Pipe Gravity Sewer Point Repair - Additional Length (DI Replacement Pipe)	20	LF		$	-
323	18" Dia. Pipe Gravity Sewer Point Repair - Additional Length (PVC Replacement Pipe)	50	LF		$	-
324	21" Dia. Pipe Gravity Sewer Point Repair - Additional Length (DI Replacement Pipe)	20	LF		$	-
325	21" Dia. Pipe Gravity Sewer Point Repair - Additional Length (PVC Replacement Pipe)	50	LF		$	-

326	24" Dia. Pipe Gravity Sewer Point Repair - Additional Length (DI Replacement Pipe)	20	LF		$	-
327	24" Dia. Pipe Gravity Sewer Point Repair - Additional Length (PVC Replacement Pipe)	50	LF		$	-
328	2" Dia. Pipe Forcemain Point Repair	3	EA		$	-
329	4" Dia. Pipe Forcemain Point Repair	3	EA		$	-
330	6" Dia. Pipe Forcemain Point Repair	3	EA		$	-
331	8" Dia. Pipe Forcemain Point Repair	3	EA		$	-
332	10" Dia. Pipe Forcemain Point Repair	2	EA		$	-
333	12" Dia. Pipe Forcemain Point Repair	2	EA		$	-
334	Replace Manhole Ring & Cover (Asphalt Pavement)	5	EA		$	-
335	Replace Manhole Ring & Cover (Unpaved)	5	EA		$	-
336	Manhole Bench Replacement, 4' Diameter	2	EA		$	-
337	Manhole Bench Replacement, 5' Diameter	2	EA		$	-
338	Manhole Bench Replacement, 6' Diameter	2	EA		$	-
339	Adjust Manhole Ring & Cover to Finished Grade (In Pavement)	5	EA		$	-
340	Adjust Manhole Ring & Cover to Finished Grade (Outside of Pavement)	5	EA		$	-
341	Flowable Concrete Fill	100	CY		$	-
342	Roadway Base, Lime Rock, Primed, Min. LBR 100, Variable Thickness	120	CY		$	-
343	Roadway Base, Crushed Concrete/Graded Aggregate, Min. LBR 100, Variable Thickness	120	CY		$	-
344	Superpave Asphalt Base, Type B 12.5, Variable Thickness	50	TN		$	-
345	Superpave Asphalt Concrete, Type SP 9.5, Fine, Traffic Level C, Variable Thickness	100	TN		$	-
346	Superpave Asphalt Concrete, Type SP 12.5, Fine, Traffic Level C, Variable Thickness	100	TN		$	-
347	Pavement, Cement Concrete, 6" Min Thickness (Driveways)	100	SY		$	-
348	Pavement, Cement Concrete, 8" Thick	100	SY		$	-
349	Driveway Restoration, In Kind, Decorative Block	50	SY		$	-
350	Milling Existing Asphalt Pavement, 1/2" Average Depth	150	SY		$	-
351	Milling Existing Asphalt Pavement, 3/4" Average Depth	150	SY		$	-
352	Milling Existing Asphalt Pavement, 1" Average Depth	150	SY		$	-
353	Curb & Gutter, Concrete, FDOT Type D	100	LF		$	-
354	Curb & Gutter Concrete, FDOT Type F	100	LF		$	-
355	Curb & Gutter, Concrete, Miami Curb	300	LF		$	-
356	Valley Gutter, Concrete, PCED Index 1315	100	LF		$	-
357	Sidewalk, Concrete, 4" Min. Thickness, Remove and Replace	500	SF		$	-
358	Sidewalk, Concrete, 6" Min. Thickness, Remove and Replace	500	SF		$	-
359	Sodding	4500	SF		$	-
360	Sectional Liner, 6" - 24" Pipe	50	EA		$	-
				SUBTOTAL - POINT REPAIRS	$	-
				GRAND TOTAL	$	-

Bid quantities are for comparison purposes only.
This contract consists of various projects which are not yet defined and no quantities are guaranteed.

155 Corey Avenue
St. Pete Beach, FL 33706-1839
www.stpetebeach.org

ADDENDUM 1

Wastewater System Rehabilitation Services

Issued 3/23/2026

*Sealed bids must be received by **9:00 AM on 04/08/2026** electronically via Bonfire. Bids received after the deadline will not be accepted. They will be publicly opened and read at **10:00 AM on 04/08/2026**. All bidders are invited to attend this bid Opening.*

Addendum 1 includes:

Pre-bid Minutes
Questions and Answers

Optional - Pre-Bid Meeting Minutes
RFP: Wastewater System Rehab Services
March 18, 2026
11:00 AM

Staff Members Present:
Sara Spain, Procurement Manager
John Taylor, Assistant Finance Director
Camden Mills, Public Services Director
Brian Peckins, Assistant Public Services Director
Dejan Milosevic, Project Manager
Michael Weaver, Infrastructure Operations Manager
Brian Gelock, Public Services
Kenneth Kosbab, Public Services
Shawn Clark, Public Services
Ariana Wilson-Romo, Exec. Assistant City Clerk's Office

Others Present:

Name	***Company***	***Contact***
Abbey Boyle	PCS Civil	abbeyb@pcscivilinc.com
Chad Holmes	Tnemec	cholmes@tnemec.com
Chris Currie	Inliner Solutions	Chris.currie@puriscorp.com
Denise Davis	Gulf Coast Underground LLC	ddavis@gogcu.com
Tom Brown	Restoration & Protective Solutions	tom@rps.llc
Drew Giustina	Restoration & Protective Solutions	andrew@rps.llc
Emily Bennett	Insituform Technologies LLC	ebennett@azuria.com
Austen Wagoner	Engineered Coatings Solutions LLC	awagoner@ecscoatings.com
Tristan Hine	PCS Civil	tristanh@pcscivilinc.com
Kevin Rowland	Did not provide	Did not provide
Nolan Leal	Rowland DE LLC	nleal@acus-us.com
Mary Hortman	Inliner Solutions LLC	flbids@puriscorp.com
Sawyer Hill	Elite Industrial Painting Inc.	sawyer@eipainting.com
Kyle Matheny	Kimley Horn and Associates	Kyle.matheny@kimley-horn.com
Shawn Ready	Did not provide	Shawn.ready@vortexcompanies.com
Amanda Gonzalez	Kimley Horn and Associates	Amanda.gonzalez@kimley-horn.com
Bruno Sequeira	BCS Construction Group	bsequeira@bcsconstructiongrp.com
Bob Baker	Did not provide	Did not provide
Mark Cassineri	Inliner Solutions	Mark.cassineri@puriscorp.com
Shayna Agosta	Did not provide	sagosta@nwmcc.com

The meeting was called to order at 11:03 AM.

All attendees were present via Teams.

Ms. Spain briefly reviewed important dates and times which are as follows:

- Receipt of questions due 3/25 at 10AM
- Bids due 4/8 by 9AM
- Bid opening 4/8 at 10AM

She requested that any questions be submitted in writing to purchasing@stpetebeach.org. Questions will be answered via an addendum that will be posted to the City website and Bonfire.

Public Services Director Camden Mills summarized that this project will be for as-needed repairs to the City's wastewater collection system. Multiple vendors may be awarded.

The following questions were asked:
Q: Bid bond required? A: Will clarify via an addendum.
Q: Can previous bid tabulations for this project be shared? A:No bid tabs to provide, this is the first time the City has issued a project like this.
Q: Is there anticipated work already prepared? A: Yes, this can be shared via an addendum.
Q: Anticipated annual budget? A: Yes, will clarify in an addendum.
Q: Is there a self- performed percentage requirement? A: Will clarify via an addendum.
Q: Does the City need to be listed for proof of insurance? A: Yes.
Q: Can you provide the address exactly how it needs to be for the COIs? A: Yes.

Mr. Taylor clarified that this is bondable based on the project at that time, meaning a bid bond is not required to submit on this bid however it may be required based on project costs.

There being no additional questions, the meeting was adjourned at 11:16 AM.

Questions and Answers:

1. **Can you confirm if there are any DBE Requirements or good faith efforts to complete for this project? No. Because there are no federal funds nor does the City of St. Pete Beach include these requirements in the Procurement Ordinance, there are no DBE requirements.**
2. **Are there any SBEs/DBEs requirements? No. Because there are no federal funds nor does the City of St. Pete Beach include these requirements in the Procurement Ordinance, there are no SBE/DBE requirements.**
3. **Is a bid bond required? If so, what is the percentage? Yes, 5% of the total bid price.**
4. **What is the engineer's estimate / annual budget cost? Estimated $1,000,000 to $2,500,000 annually.**
5. **I was not able to locate a proposed budget for this project, would you happen to have that information available? Estimated $1,000,000 to $2,500,000 annually.**
6. **Are there any liquidated damages? Yes. If the work embraced by this Contract is not completed on or before the date set for completion or any extension thereof, the actual damages for the delay will be impossible to determine and in lieu thereof, the Contractor shall pay to the City fixed, agreed, and liquidated damages in the amount of either Five-Hundred Dollars ($500) per day for each calendar day of delay until the work is satisfactorily completed.**
7. **Hinterland Group respectfully request that Refratta's 100% pure-fused calcium aluminate coating be approved as an equal under that manhole rehabilitation specifications. Refratta's specs are attached for your review. The specifications for CIPP liner materials and manhole lining materials do not specify specific manufacturers and/or products for use under this contract. As specified in Specification Section 1.09, all materials, appliances, and types of construction shall be in accordance with the Technical Specifications.**
8. **Hinterland Group respectfully requests that Global Materials Company be approved as a CIPP liner manufacturer. Global specs are attached for your review. The specifications for CIPP liner materials and manhole lining materials do not specify specific manufacturers and/or products for use under this contract. As specified in Specification Section 1.09, all materials, appliances, and types of construction shall be in accordance with the Technical Specifications.**
9. **Is there a plan holders list for this project? Please see minutes with organizations present at the pre-bid meeting. The City of St. Pete Beach cannot see who has viewed the bid documents.**
10. **Do you have a plan holders list you could provide me for the above referenced bid? Please see minutes with organizations present at the pre-bid meeting. The City of St. Pete Beach cannot see who has viewed the bid documents.**
11. **Will the Owner/Engineer please provide a copy of the current plan holders list? Please see minutes with organizations present at the pre-bid meeting. The City of St. Pete Beach cannot see who has viewed the bid documents.**
12. **Will the Owner/Engineer please provide the anticipated annual spending for this contract to include each rehab division? Estimated $1,000,000 to $2,500,000 annually total.**
13. **Will the Engineer/Owner please provide previous itemized bid tabulation or contract pricing for each division/ contract? The City of St. Pete Beach does not have bid tabulations within the last 5 years.**
14. **Will the Owner/Engineer provide example work orders from previous contract periods? No.**

15. **Will the Owner provide a disposal site for pipe cleaning debris at no cost to the Contractor? Yes.**
16. **Will the Contractor be allowed to increase pricing from year 1 to subsequent years? Contract prices to remain firm through the first three contract years. Sixty days prior to the contract renewal date, contract/vendor may request a price adjustment.**
17. **Prebid question: Bid bond required? Yes, 5% of the total bid price.**
18. **Prebid question: Can previous bid tabulations for this project be shared? The City of St. Pete Beach does not have bid tabulations within the last 5 years.**
19. **Prebid question: Is there anticipated work already prepared? Bid form reflects anticipated work. City is underway with cleaning/televising entire wastewater collection system to analyze current conditions and will reprioritize if needed once that project is complete (estimated Dec 2026).**
20. **Prebid question: Anticipated annual budget? Estimated $1,000,000 to $2,500,000 annually.**
21. **Prebid question: Is there a self-performed percentage requirement? Yes, 100% Performance Bond.**
22. **Prebid question: Does the City need to be listed for proof of insurance? Yes**
23. **Prebid question: Can you provide the address exactly how it needs to be for the COIs?**
    City of St. Pete Beach
    155 Corey Avenue
    St. Pete Beach, FL 33706

155 Corey Avenue
St. Pete Beach, FL 33706-1839
www.stpetebeach.org

ADDENDUM 2

Wastewater System Rehabilitation Services

Issued 3/27/2026

*Sealed bids must be received by **9:00 AM on 04/08/2026** electronically via Bonfire. Bids received after the deadline will not be accepted. They will be publicly opened and read at **10:00 AM on 04/08/2026**. All bidders are invited to attend this bid Opening.*

Addendum 2 includes:

Questions and Answers

Questions and Answers:

1. **Is there a form to fill out for our sub-contractor for the bid submittal? Do I need to add anything for them with our bid? You are welcome to list them as a sub-contractor in your proposal, but there is no form. The sub-contractor is the contractor's financial responsibility.**

2. **Please clarify the Period of Performance in the General Contract Terms. This states base scope target completion of January 2027 while other parts of the RFP specify a three year contract. Three-year contract with options for up to (2) 1-year extensions for ongoing work.**

3. **Will any bonding be required? Yes, 5% total bid cost.**

4. **How will work be assigned on this contract? Will multiple contractors be assigned to a single project? Multiple contractors may be assigned to a single project, depending on scope required and contractor's abilities.**

5. **Is there an estimated yearly budget for this contract? $1M to $2.5M annually.**

6. **Are there any previous detailed, itemized bid tabs available for this or other similarly bid projects? Please see minutes with organizations present at the pre-bid meeting. The City of St. Pete Beach cannot see who has viewed the bid documents.**

7. **Is Item PL-50, (Grout, Gal) to be used in conjunction with items PL-47 through PL-49? Yes, please refer to the technical specifications. This pay item is applicable only in conjunction with Pay Items 47 through 49.**

8. **Can the owner add a Lateral Grouting, Per EA, Bid Item? Yes, pay item 55 has been added under pipe lining.**

9. **Does the owner have an annual budget for the Wastewater System Pipe (CIPP) Lining portion? No specific budget per portion.**

10. **In the addendum it says we need a 5% Bid Bond. Do you have a form to provide, or can our Surety use there's? We do not have a form. This would come from your surety company for the bond.**

11. **Several vendors have asked about using specific material manufacturers. The specifications for manhole lining materials do not specify specific manufacturers and/or products for use under this contract. As specified in Specification Section 1.09, all materials, appliances, and types of construction shall be in accordance with the Technical Specifications. Accordingly, bidders may base their bids on any manhole lining system that meets the performance and technical requirements of the specifications. Any proposed material or product will be subject to review for compliance with the Contract Documents through the submittal process after award.**

12. **In Addendum 1, there are contradicting answers for the bid bond needing to be submitted. On page 3 after the questions asked during the pre-bid, it states that it is bondable based on the project at that time, meaning a bid bond wasn't required to be submitted. On page 4 and 5, it states a bid bond of 5% is required to be submitted. Can you please clarify if a bid bond is required to be submitted with the proposal, and if so, what percentage is required? Discussion after the meeting led the City of St. Pete Beach to require a bid bond of 5% total bid cost, which must be submitted with the proposal.**

13. **Are alternate products being considered if they meet specification requirements of the proposed products? The specifications for manhole lining materials do not specify specific manufacturers and/or products for use under this contract. As specified in Specification Section 1.09, all materials, appliances, and types of construction shall be in accordance with the Technical Specifications. Accordingly, bidders may base their bids on any manhole lining system that meets the performance and technical requirements of the specifications. Any proposed material or product will be subject to review for compliance with the Contract Documents through the submittal process after award.**

14. **Do we have to fill out each individual section of the bid form, or can we bid the section that only pertains to our capabilities? See IV. General Contract Terms: It is not mandatory to submit a proposal for every item listed. A bidder may bid on any, all, or none of the items.**

15. **What is the anticipated work order size and how many work orders are anticipated to be issued annually? City anticipates issuing 3 purchase orders annually, 1 for each scope (pipe lining, point repairs, manhole rehabilitation), with multiple work orders per purchase order.**

16. **Will the work orders be issued in geographically grouped areas, or will the work be scattered across the City? Work orders will be issued in geographically grouped areas.**

17. **The RFP page 6 states "Vendors may submit proposals for all, some, or only one of the categories" and later "bidder may bid on any, all, or none of the items." Please confirm if bidders are required to bid all items with a category (Manhole Rehabilitation, Pipe Lining, and/or Point Repairs). You may bid certain line items only.**

18. **What are the allowable working hours? Standard work hours shall be from 7:30 AM until 6:00 PM, Monday through Saturday. No work shall take place on Sundays or on official City holidays without prior approval by the City Manager or designee at least 1 week prior to the scheduled work. A list of current official City holidays can be found on the City's Human Resources website at http://www.stpetebeach.org/hr/holidays.html. Contractor will coordinate scheduling of work with the City's Project Manager and City's Inspector.**

19. **Pipe Lining Item 15 for 6" Diameter CIPP shows a thickness of 6.0mm. This is not feasible for 6" diameter pipe and industry standard is 4.5mm. Please confirm 4.5mm will be acceptable for 6" diameter CIPP. 4.5mm is acceptable. This is acceptable. Pay item 15 has been updated accordingly.**

20. Regarding Mobilization bid item, please confirm this will be paid for each work order, and will not be paid only once per year. Please refer to the technical specifications. The quantity of mobilization to be paid for under this item shall be measured as one unit each (EA) per job assignment. One (1) mobilization will be allowed for each job assignment, project, or work order no matter how many times the equipment must be relocated by loading, transporting, and unloading, or under its own power to complete the job assignment or project. Payment for mobilization shall not exceed 10 percent (10%) of the total Contract cost unless the Contractor can prove to the City that his actual mobilization cost exceeds 10 percent (10%).

21. Section 2 Pay Item Descriptions for Mobilization includes "establishment of Subcontractor's temporary offices, buildings, …" Please confirm a temporary office or building is not required. Not required.

22. Section 2 Pay Item Descriptions for Bypass Pumping Setup & Operation states this "Pay Item is applicable on projects or repairs that have high flow or require an over night by pass operation." What is considered "high flow"? Will this item be paid for a "typical" bypass for an 8" diameter CIPP installation? Please elaborate on the requirements for this item and how it will be paid. These pay items apply when bypass pumping is needed to complete the repair without overflows. Pay item 26 would be used for bypass for an 8" diameter installation. The quantity to be measured for payment under this Pay Item will be the actual number of by-pass pumping set ups and operations, per part of day, required by the Engineer in the work. The minimum measurement for this pay item is eight (8) hours or 0.333 days and is measured from the time that the sewage is actually by-passed. This eight (8) hour minimum (0.333 days) includes full compensation for set up and operation for up to the first eight (8) hour period. Additional time will be in tenths of the day or twenty-four (24) hour period. The quantities determined shall be paid per day (DAY) or portion of day of by-pass pumping set up and operation.

23. The measurement for bypass also states the minimum measurement is 8 hours and will be paid for the first 8 hour period with additional time in tenths of a day. Please explain how this will be paid for say a 10 hour day. For example with $1,000/EA Setup and $500/Day: If a 10 hour day is being bypassed, will the contractor be paid the $1000 setup plus 2 hours (10-8 hours) / 24 hours x $1000 = $83.33 + $500 for a total of $1,583.33? In this scenario, payment would be total $1,216.50. ($1,000 setup + $500 operation x (0.333 day + 0.1 day))

24. Section 2 Pay Item Descriptions for CIPP Main Liner include cleaning and pre/post CCTV inspection. However, there are bid items for Normal Cleaning and Specialty Cleaning. Please confirm cleaning and pre CCTV inspection to prep the pipe for CIPP lining will be paid under the Normal Cleaning and/or Specialty Cleaning items, and is not incidental to CIPP Main Liner items. Cleaning and pre CCTV Cleaning and pre-CCTV inspection to prep the pipe for CIPP is incidental to CIPP main liner items. Payment shall include all materials, labor, equipment, and supplies necessary for the CIPP Main Liner installation, and specifically includes, but is not limited to, pre-rehabilitation CCTV inspection, liner sampling and storage of samples for testing, sealing liner connections at manholes, matching existing manhole lining to the CIPP

liner, matching existing flow channels and surfacing to the liner to minimize turbulence, cleaning, removal and disposal of all sand, rubble, deposits, and other accumulated debris after liner installation, post-rehabilitation CCTV inspection video and log, restoration, and all other appurtenant work as specified. Pay items 39-46 are for services requiring cleaning only.

25. Section 2 Pay Item Descriptions for Chemical Sealing of Host Pipe states this item will be paid for each pipe "regardless of…the number of infiltration points sealed." This currently reads that a pipe with one single joint with infiltration will be paid the same as a different pipe with 80 joints that all need to be sealed. Bidders have no way of knowing how many joints may be leaking on a particular segment which could drastically skew the pricing. Would you please consider revising this item to include Chemical Sealing of Host Pipe per Joint or per Service Connection? This pay item is to provide a cost for sealing excessively leaking infiltration points prior to lining of a host pipe. Revising this to a per-seal price would introduce the need to verify the number of leaking joints prior to approving a pay application following execution of the work. For tracking purposes, a flat-fee price will remain.

26. Section 2 Pay Item Descriptions for Service Reconnection states each service shall be grouted 18-inches into the lateral. Will this remain a requirement? If so, would you please consider adding Service Reconnection bid items per pipe diameter as there is substantial cost difference in grouting laterals per main diameter? Main diameter should not be a big factor, the lateral diameters are fairly consistent and the annular space volume will be dependent on the lateral diameter, not the main diameter. Pay item to remain as is.

27. The CIPP Spec (Section 21), paragraph 21.11.02 states up to 10% of the installed liners may be tested for exfiltration per ASTM F1216, Section 8.2 which is a hydrostatic pressure test. This test is not applicable to any line with services and adds unnecessary cost to the project as any potential defects will be verified via the post-rehab CCTV inspection. Would you please consider removing this unnecessary requirement which will ultimately create the most competitive pricing for the Owner? Section 21.11.02 specifies the testing is to be performed prior to any service lateral reconnections. Pay item to remain as-is.

28. Also, please accept SAK Construction, LLC as Installer and Pipenology, LLC as Manufacturer of CIPP Liners, in regards to the above referenced project. Per prequalification requirements on pages 1 and 2 of the Section 21 – CIPP Specification, please see attached documents for your review: SAK Company Information, CIPP Completed Project List, Pipenology CIPP Liner Submittal. The specifications for manhole lining materials do not specify specific manufacturers and/or products for use under this contract. As specified in Specification Section 1.09, all materials, appliances, and types of construction shall be in accordance with the Technical Specifications. Accordingly, bidders may base their bids on any manhole lining system that meets the performance and technical requirements of the specifications. Any proposed material or product will be subject to review for compliance with the Contract Documents through the submittal process after award.

29. **Can you please specify whether the minimum CIPP thicknesses are pre- or post- installation measurements? Post-installation (finished-in-place) thickness.**

30. **Will the Owner provide water, at no cost to the contractor, for work requiring water? Yes.**

155 Corey Avenue
St. Pete Beach, FL 33706-1839
www.stpetebeach.org

ADDENDUM 3

Wastewater System Rehabilitation Services

Issued 3/30/2026

*Sealed bids must be received by **9:00 AM on 04/08/2026** electronically via Bonfire. Bids received after the deadline will not be accepted. They will be publicly opened and read at **10:00 AM on 04/08/2026**. All bidders are invited to attend this bid Opening.*

Addendum 3 includes:

Questions and Answers

Questions and Answers:

Do we add all documents including the bid for (Price) to one PDF for submission? You may submit more than one document. They do not have to all be on one PDF.

For pay items 34-36 and pay items 40-42, the units are EA. Can you provide the depths of the manholes under "EACH" since this will significantly affect the price? Or can you change the units to VF as you have on the pay items for Additional MH Coating? 48" diameter manhole depths range from approx. 2 to 14 ft, with the majority between 4 and 6 ft.

EXHIBIT "C"

Vendor Bid/Proposal

(Place Vendor's Bid/Proposal Behind this Page)

PROJECT No.:
BID NAME: Wastewater System Rehabilitation Systems

HG Job No. 26-0144-00

BID DUE - Wednesday, April 8th, 2026 at 9:00 am

SUBMITTED TO:

City of St Pete Beach
Via: stpetebeach.bonfirehub.com



SUBMITTED BY: **Hinterland Group, LLC**
2051 W Blue Heron Blvd.
Riviera Beach, FL 33404
561-640-3503
Email: info@hinterlandgroup.com

VI. CONTRACTOR'S PROPOSAL SUBMITTAL

The company that is submitting a proposal declares that it has extensive experience in Wastewater System Rehabilitation Services, including manhole rehabilitation, pipe lining and point repairs.

The undersigned, as Proposer, hereby declares that the only person or persons interested in the Proposal as principal or principals are named herein, and that no person other than herein mentioned has any interest in the Proposal or in the Agreement to be entered into; that this Proposal or Agreement is made without connection with any other person, company, or parties making a Proposal; and that it is in all respects fair and in good faith without collusion or fraud.

The Proposer further declares that they have examined the site of the work and informed themselves fully in regard to all conditions pertaining to the place where the work is to be done; that they have examined the Plans and Specifications for the work and Contract Documents relative thereto, and have read all special provisions furnished prior to the opening of proposals; and that they have satisfied themselves relative to the materials to be supplied and work to be performed.

The Proposer proposes and agrees, if the Proposal is accepted, to contract with the City of St. Pete Beach, Florida, in the form of an Agreement specified for **"Wastewater System Rehabilitation Services"** in St. Pete Beach, Florida, in full and complete accordance with the shown, noted, described, and reasonably intended requirements of the Plans, Specifications, and Contract Documents, to the full and entire satisfaction of the City of St. Pete Beach, Florida.

The successful Proposer shall be required to utilize the template Agreement in this Request for Proposals (RFP) and any questions regarding the Agreement must be addressed during the RFP process before submittal. The City reserves the right to respond or not respond to questions in the form of an addendum.

The Proposer proposes to furnish all materials, equipment, labor, and perform the work submitted in their proposal schedule for the City of St. Pete Beach **"Wastewater System Rehabilitation Services."**

COMPANY: Hinterland Group, LLC DATE: 3/26/2026

ADDRESS: 2051 W Blue Heron Blvd, Riviera Beach, FL 33404 PHONE: 561-640-3503

PROPOSER: _____ NAME: Chase Rogers, COO

(SIGNATURE) (PRINT NAME & TITLE)

HINTERLAND GROUP, LLC CORPORATE SEAL JUNE 26, 2006 FLORIDA

STATE OF FLORIDA
COUNTY OF Palm Beach

The foregoing instrument was sworn to (or affirmed), subscribed, and acknowledged before me by means of ☑ physical presence or ☐ online notarization, this 27 day of March, 2026, by Chase Rogers, COO, who is personally known to me or has produced _____ as identification.

(SEAL)

_____
Notary Public – State of Florida

NOTARY PUBLIC STATE OF FLORIDA
MONTISHA LYNN SOTO
Commission # HH 735878
Expires October 28, 2029

Montisha Soto
(Print, Type, Stamp, or Commissioned Name of Notary Public)

SUBMIT PROPOSAL TO: Electronically via Bonfire only

VII. PUBLIC ENTITY CRIMINAL AFFIDAVIT

SWORN STATEMENT – PUBLIC ENTITY CRIMES

PURSUANT TO § 287.133 (3)(a), FLORIDA STATUTES, ON PUBLIC ENTITY CRIMES
THE FORM MUST BE SIGNED AND SWORN TO IN THE PRESENCE OF A NOTARY PUBLIC OR OTHER OFFICIAL AUTHORIZED TO ADMINISTER OATHS.

1. This sworn statement is submitted to: City of St. Pete Beach

by: Chase Rogers, COO
(Print individual's name and title)

for: Hinterland Group, LLC
(Print name of entity submitting sworn statement)

at: 2051 W Blue Heron Blvd, Riviera Beach, FL 33404
(Business address)

and (if applicable), its Federal Employer Identification Number (FEIN):

20-5156844
(FEIN)
or, if the entity has no FEIN, include the Social Security Number:

N/A
(SSN)

by the individual signing this sworn statement: _____
(Signature) Chase Rogers, COO

HINTERLAND GROUP, LLC CORPORATE SEAL JUNE 26, 2006 FLORIDA

2. I understand that a "public entity crime" as defined in § 287.133 (1)(g), Fla. Stat., means a violation of any State or Federal law by a person with respect to and directly related to the transaction of business with any public entity or with an agency or political subdivision of any other state or of the United States including, but not limited to, any proposal or contract for goods or services, any lease for real property, or any contract for the construction or repair of a public building or public work, involving antitrust, fraud, theft, bribery, collusion, racketeering, conspiracy, or material misrepresentation.

3. I understand that "convicted" or "conviction" as defined in § 287.133 (1)(b), Fla. Stat., means a finding of guilt or a conviction of public entity crime with or without an adjudication of guilt in any Federal or State trial court of record relating to charges brought by indictment or information after July 1, 1989, as a result of a jury verdict, non-jury trial, or entry of a plea of guilty or nolo contendere.

4. I understand that an "affiliate" as defined in § 287.133 (1)(a), Fla. Stat., means:
   a. A predecessor or successor of a person convicted of a public entity crime or
   b. An entity under the control of any natural person who is active in the management of the entity and who has been convicted of a public entity crime. The term "affiliate" includes those officers, directors, executives, partners, shareholders, employees, members, and agents who are active in the management of an affiliate. The ownership by one (1) person of shares constituting a controlling interest in another person or a pooling of equipment or income among persons when not for fair market value under the arm's length agreement, shall be a prima facie case that one (1) person controls another person. A person who knowingly enters into a joint venture with a person who has been convicted of a public crime in Florida during the preceding thirty-six (36) months shall be considered an

affiliate.

5. I understand that a "person" as defined in Section 287.133 (1)(e), Fla. Stat., means any natural person or any entity organized under the laws of any state or of the United States with the legal power to enter into a binding contract and which proposals or applies to proposal on contracts let by a public entity, or which otherwise transacts or applies to transact business with a public entity. The term "person" includes those officers, directors, executives, partners, shareholders, employees, members, and agents who are active in management of an entity.

6. Based on information and belief, the **statement which I have marked below is true** in relation to the entity submitting this sworn statement (indicate which statement applies).

✓ Neither the entity submitting this sworn statement, nor any of its officers, directors, executives, partners, shareholders, employees, members, or agents who are active in the management of the entity nor any affiliate of the entity has been charged with and convicted of a public entity crime subsequent to July 1, 1989.

☐ The entity submitting this sworn statement or one (1) or more of its officers, directors, executives, partners, shareholders, employees, members, or agents who are active in the management of the entity or an affiliate of the entity has been charged with and convicted of a public entity crime subsequent to July 1, 1989.

☐ The entity submitting this sworn statement or one (1) or more of its officers, directors, executives, partners, shareholders, employees, members, or agents who are active in the management of the entity or an affiliate of the entity has been charged with and convicted of a public entity crime subsequent to July 1, 1989. However, there has been a subsequent proceeding before a Hearing Office of the State of Florida, Division of Administrative Hearings and the Final Order entered by the Hearing Officer determined that it was not in the public interest to place the entity submitting this sworn statement on the convicted vendor list (attach a copy of the final order).

I UNDERSTAND THAT THE SUBMISSION OF THIS FORM TO THE CONTRACTING OFFICE FOR THE PUBLIC ENTITY IDENTIFIED IN PARAGRAPH 1 ABOVE IS FOR THE PUBLIC ENTITY ONLY AND THAT THIS FORM IS VALID THROUGH DECEMBER 31 OF THE CALENDAR YEAR IN WHICH IT IS FILED. I ALSO UNDERSTAND THAT I AM REQUIRED TO INFORM THE PUBLIC ENTITY PRIOR TO ENTERING INTO A CONTRACT IN EXCESS OF THE THRESHOLD AMOUNT PROVIDED IN SECTION 287.017, FLORIDA STATUTES, FOR CATEGORY TWO OF ANY CHANGE IN THE INFORMATION CONTAINED IN THIS FORM.

STATE OF FLORIDA
COUNTY OF PALM BEACH

The foregoing instrument was sworn to (or affirmed), subscribed, and acknowledged before me by means of ✓ physical presence or ☐ online notarization, this 27 day of March, 2026, by Chase Rogers, COO, who is personally known to me or has produced _____ as identification.

(SEAL)

NOTARY PUBLIC STATE OF FLORIDA

MONTISHA LYNN SOTO
Commission # HH 735878
Expires October 28, 2029

Notary Public – State of Florida

Montisha Lynn Soto
(Print, Type, Stamp, or Commissioned Name of Notary Public)

VIII. NON-COLLUSION AFFADAVIT

STATE OF FLORIDA COUNTY OF PALM BEACH

I state that I Chase Rogers, COO of Hinterland Group, LLC,
(Name and Title) (Name of Firm)

I am authorized to make this affidavit on behalf of my firm and its owner, directors and officers. I am the person responsible in my firm for the price(s) and amount(s) of this Response, and the preparation of the Response. I state that:

1. The price(s) and amount(s) of this Response have been arrived at independently and without consultation, communication or agreement with any other Provider, potential provider, Proposal, or potential Proposal.

2. Neither the price(s) nor the amount(s) of this Response, and neither the approximate price(s) nor approximate amount(s) of this Response, have been disclosed to any other firm or person who is a Provider, potential Provider, Proposal, or potential Proposal, and they will not be disclosed before Proposal opening.

3. No attempt has been made or will be made to induce any firm or persons to refrain from submitting a Response for this contract, or to submit a price(s) higher that the prices in this Response, or to submit any intentionally high or noncompetitive price(s) or other form of complementary Response.

4. The Response of my firm is made in good faith and not pursuant to any agreement or discussion with, or inducement from, any firm or person to submit a complementary or other noncompetitive Response.

5. Hinterland Group, LLC its affiliates, subsidiaries, officers, director, and employees (Name of Firm) are not currently under investigation, by any governmental agency and have not in the last three years been convicted or found liable for any act prohibited by State or Federal law in any jurisdiction, involving conspiracy or collusion with respect to Proposal, on any public contract, except as follows:

I state that I and the named firm understand and acknowledge that the above representations are material and important, and will be relied on by the State of Florida for which this Response is submitted. I understand and my firm understands that any misstatement in this affidavit is, and shall be treated as, fraudulent concealment from the State of Florida of the true facts relating to the submission of responses for this contract.

Name of Organization: Hinterland Group, LLC Signed By: _____

Print Name: Chase Rogers, COO

The foregoing instrument was sworn to (or affirmed), subscribed, and acknowledged before me by means of ☑ physical presence or ☐ online notarization, this 27 day of March, 2026, by Chase Rogers, COO, who is personally known to me or has produced _____ as identification.

(SEAL)

_____
Notary Public – State of Florida

MONTISHA LYNN SOTO
Commission # HH 735878
Expires October 28, 2029

Montisha Soto
(Print, Type, Stamp, or Commissioned Name of Notary Public)

References

1) Name of Project: Stormwater Collection System Rehab – Annual Contract
   Date of Completion: Ongoing Annual Contract
   Contract Amount: $400,000.00 Annually
   Project Description: Rehabilitation of existing storm sewer pipes, utilizing cured-in-place pipe lining - 30,000' 12" – 84" Cleaning / CCTV / Lining
   Owner's Name: Charlotte County
   Address: 18500 Murdock Circle, Port Charlotte, FL 33948
   Contact & Phone Number: Randy Vowell - 941-575-3680 / Randy.Vowell@charlottefl.com

2) Name of Project: Wastewater Gravity Lines and Manhole Rehabilitation
   Date of Completion: Ongoing Annual Contract
   Contract Amount: $3,998,888.10
   Project Description: Sewer and water pipe lining, lateral replacement, point repairs, and rehab of basins – Lines from 8" – 36" SS CIPP with 426 laterals lined and 5,674 VF of Manhole Rehab
   Owner's Name: Palm Beach County Water Utilities Department
   Address: 8100 Forest Hill Blvd., West Palm Beach, FL 33413
   Contact & Phone Number: Frantz Fenelon – 561-493-6123 / FFenelon@pbcwater.com

3) Name of Project: Stormwater Pipe and Infrastructure Video Inspection & Repair
   Date of Completion: Ongoing Annual Contract
   Contract Amount: Varies with each Work Order
   Project Description: Storm Drain Observation, CIPP Lining, Manhole Rehab, Point Repair, Driveway Restoration, Cleaning and Sediment Removal, Emergency Storm Replacement, Main Line Replacement, reset catch basin to proper elevation restoring catch basin, swale and roadway
   Owner's Name: Town of Lake Park
   Address: 650 Old Dixie Hwy, Lake Park, FL 33403
   Contact & Phone Number: John Wylie – 561-881-3345 / JWylie@lakeparkflorida.gov

ABOUT HINTERLAND GROUP, LLC

As a fully licensed and insured Contractor in Florida, North Carolina, South Carolina, Louisiana, Tennessee, and Alabama in underground utility and electrical, Hinterland is experienced and fully qualified in all areas of utility repair, rehabilitation and new construction. This includes all requirements necessary for the construction of water mains, reuse mains, force mains, gravity mains, manhole rehabs and replacements, repair of sewer collapses, water main breaks and rehabilitation of lift stations, CCTV, cleaning gravity sewer mains, CIPP lining, and general electrical services.

A. Overview of Firm

a. Company Name: Hinterland Group, LLC
b. Number of Years in Business: 19 Years
c. Date Formed: 06/26/2006
d. Office Locations:

- 1915 Jamestown Rd., Morganton, NC 28655
- 2051 W Blue Heron Blvd., Riviera Beach, FL 33404
- 235 Hunt Dr., Merritt Island, FL 32926
- 955 SE Central Parkway, Stuart, FL 34994

e. Florida License's held by Hinterland Group, LLC:

- Florida Certified General Contractor – CGC1520354
- Florida Certified Underground and Excavating Contractor – CUC1224634
- Florida Certified Building Contractor – CBC1255077
- Florida Certified Electrical Contractor – EC13003515 & EC13003753
- South Carolina Certified General Contractor – WL5, WP5, GD5 – CLG.126028
- North Carolina Certified General Contractor – PU – 104386
- Alabama Licensed General Contractor – MU-S-60251
- Louisiana Licensed General Contractor – Pipe Work – 209
- Tennessee Contractor - 82329

B. Brief Description of Work Performed:

Hinterland is a fully encompassed, state certified general, utility and electrical contractor specializing in the installation, repair and maintenance of all utilities. Given the licenses that are held by Hinterland we can perform any work that could be required by any public or private entity ranging from utility through electrical work. By doing so Hinterland provides a simple, quick and cost saving, turnkey fix to any problem or need their customers.

Hinterland owns and operates an extensive list of equipment, attached herein, which includes any tools, machines, pumps or any other appurtenance that may be necessary to get the job done quickly and correctly no matter how demanding the situation.

C. Hinterland currently employs nearly 200 people, all working in the underground utility field. Over 15 crews are working in the field daily all in some fashion of the underground industry. Working in tandem with the trenchless technologies division detailed below, Hinterland is best suited to support the infrastructure of St. Pete Beach because of our ability to respond to any emergency in-house without the costly delays of subcontractor coordination. Attached herein are the resumes of key personnel. Attached hereto is the resumes of key personnel.

D. With an expansive fleet for various use. Hinterland can self-perform all phases within the work description in the most expeditious manner possible. Additionally, we maintain a vast inventory of excavators to assist with pipe repairs when needed. This vast amount of equipment requires us to employ no less than six full-time mechanics for equipment to be ready at the moment's notice. Safety and fleet work hand in hand to ensure our equipment operates at peak efficiency without risk to operators, laborers or pedestrians.

E. Safety is a priority at Hinterland. We employ a full-time safety manager who administers weekly safety trainings and maintains our certifications.

F. Over 95% of all gross revenue and work performed by Hinterland is contracted under municipalities located throughout the southeast United States. Please see attached our current work underway which includes dollar amounts.

G. Hinterland Group has no unresolved or ongoing claims / disputes against it or any of its principals.

H. Please note that HG is not presently in violations of any statutes or regulatory rules that may impact our operations.

Document A310™ – 2010

Conforms with The American Institute of Architects AIA Document 310

Bid Bond

CONTRACTOR:
(Name, legal status and address)

Hinterland Group, LLC
2051 West Blue Heron Boulevard
Riviera Beach, FL 33404

SURETY:
(Name, legal status and principal place of business)

SiriusPoint America Insurance Company
1 World Trade Ctr, 285 Fulton St, 47th Fl STE 47J
New York, NY 10007
Mailing Address for Notices
1411 Opus Place, Suite 450
Downers Grove, Illinois 60515

This document has important legal consequences. Consultation with an attorney is encouraged with respect to its completion or modification.

Any singular reference to Contractor, Surety, Owner or other party shall be considered plural where applicable.

OWNER:
(Name, legal status and address)

CITY OF ST. PETE BEACH
155 Corey Avenue
St. Pete Beach, FL 33706

BOND AMOUNT: $ 5% Five Percent of Amount Bid

PROJECT:
(Name, location or address, and Project number, if any)

Wastewater System Rehabilitation Services

The Contractor and Surety are bound to the Owner in the amount set forth above, for the payment of which the Contractor and Surety bind themselves, their heirs, executors, administrators, successors and assigns, jointly and severally, as provided herein. The conditions of this Bond are such that if the Owner accepts the bid of the Contractor within the time specified in the bid documents, or within such time period as may be agreed to by the Owner and Contractor, and the Contractor either (1) enters into a contract with the Owner in accordance with the terms of such bid, and gives such bond or bonds as may be specified in the bidding or Contract Documents, with a surety admitted in the jurisdiction of the Project and otherwise acceptable to the Owner, for the faithful performance of such Contract and for the prompt payment of labor and material furnished in the prosecution thereof; or (2) pays to the Owner the difference, not to exceed the amount of this Bond, between the amount specified in said bid and such larger amount for which the Owner may in good faith contract with another party to perform the work covered by said bid, then this obligation shall be null and void, otherwise to remain in full force and effect. The Surety hereby waives any notice of an agreement between the Owner and Contractor to extend the time in which the Owner may accept the bid. Waiver of notice by the Surety shall not apply to any extension exceeding sixty (60) days in the aggregate beyond the time for acceptance of bids specified in the bid documents, and the Owner and Contractor shall obtain the Surety's consent for an extension beyond sixty (60) days.

If this Bond is issued in connection with a subcontractor's bid to a Contractor, the term Contractor in this Bond shall be deemed to be Subcontractor and the term Owner shall be deemed to be Contractor.

When this Bond has been furnished to comply with a statutory or other legal requirement in the location of the Project, any provision in this Bond conflicting with said statutory or legal requirement shall be deemed deleted herefrom and provisions conforming to such statutory or other legal requirement shall be deemed incorporated herein. When so furnished, the intent is that this Bond shall be construed as a statutory bond and not as a common law bond.

Signed and sealed this 8th day of April, 2026

(Witness) Montisha Soto

Hinterland Group, LLC
(Principal) *(Seal)*

By: Chase Rogers, COO
(Title)

(Witness) Alexa Costello

SiriusPoint America Insurance Company
(Surety) *(Seal)*

By:
(Title) Martin Moss Attorney-in-Fact

S-0054/AS 8/10

State of Illinois

County of DuPage

SURETY ACKNOWLEDGEMENT (ATTORNEY-IN-FACT)

I, Rebecca Medina Notary Public of DuPage County, in the State of Illinois, do hereby certify that Martin Moss Attorney-in-Fact, of the SiriusPoint America Insurance Company who is personally known to me to be the same person whose name is subscribed to the foregoing instrument, appeared before me this day in person, and acknowledged that he signed, sealed and delivered said instrument, for and on behalf of the SiriusPoint America Insurance Company for the uses and purposes therein set forth.

Given under my hand and notarial seal at my office in the City of Downers Grove in said County, this 8th day of April, 2026.

Rebecca Medina

Notary Public Rebecca Medina

My Commission expires: December 15, 2026

OFFICIAL SEAL
REBECCA MEDINA
NOTARY PUBLIC, STATE OF ILLINOIS
COOK COUNTY
MY COMMISSION EXPIRES 12/15/2026

POWER OF ATTORNEY
SIRIUSPOINT AMERICA INSURANCE COMPANY
NEW YORK

TSBA0823

KNOW ALL MEN BY THESE PRESENTS: That SiriusPoint America Insurance Company (the "Company"), a New York corporation, having its principal office in the City of New York, pursuant to the following Resolution, which was adopted on August 27,2024 by Unanimous Written Consent of the Board of the Directors of the Company, to wit:

RESOLVED, that the President, Senior Vice President, Chief Financial Officer, Secretary or the Assistant Secretary is hereby authorized to execute Powers of Attorney appointing as attorneys-in-fact selected employees of certain surety companies who shall have the power for and on behalf of the Company to execute and affix the seal of the Company to surety contracts as co-surety. Such authority can be executed by use of facsimile signature.

Does hereby nominate, constitute and appoint: **Martin Moss**

BondNo: Bid Bond
Principal: Hinterland Group, LLC
Obligee: CITY OF ST. PETE BEACH

Its true and lawful agent and attorney-in-fact, to make, execute, seal and deliver for and on its behalf, and its act and deed any and all bonds, contracts, agreements of indemnity and other undertakings in suretyship (NOT INCLUDING bonds without a fixed penalty or financial guarantee) and to bind the Company thereby as fully and to the same extent as of same were signed by the duly authorized officers of the Company, provided, however, that the penal sum of any one such instrument executed hereunder shall not exceed the sum of:

$63,971,000 single bond limit

All acts of said attorneys-in-fact pursuant to the authorities herein given are hereby ratified and confirmed. The President, Senior Vice President, Chief Financial Officer, Secretary or Assistant Secretary may from time to time and at any time remove such appointee and remove the power given to him or her.

The execution of such bonds or undertakings in pursuance of these presents, within one year of the date of these present, shall be binding under said Company, as fully and amply, to all intents and purposes, as if they had been duly executed and acknowledged by the regularly elected officers of the Company at its office in New York, New York, in their own proper persons.

IN WITNESS WHEREOF, SiriusPoint America Insurance Company has caused its corporate seal to be hereunto affixed and these presents to be signed by its President this tenth day of October, 2024.

SiriusPoint America Insurance Company

Paul Mihulka
President

State of New York
County of New York

On this tenth day of October 2024, before me a Notary Public of the State of New York, in and for the County of New York, duly commissioned and qualified, came Paul Mihulka, President, of SiriusPoint America Insurance Company, to me personally known to be the individual and officer described in, and who executed the preceding instrument, and acknowledged the execution of the same, and being by me duly sworn, deposed and said that he is the officer of the said Company aforesaid, and that the seal affixed to the preceding instrument is the Corporate Seal of said Company, and the said Corporate seal and his signature as officer were duly affixed and subscribed to the said instrument by the authority and direction of the said Company, referred to in the preceding instrument is now in force.

IN TESTIMONY WHEREOF, I have hereunto set my hand and affixed my official seal.

SUSAN HISCOCK
Notary Public - State of New York
NO. 01HI6444797
Qualified in Richmond County
My Commission Expires Dec 5, 2026

Susan Hiscock
Notary Public
My Commission expires Dec. 5, 2026

STATE OF New York
COUNTY OF New York

I, Paul Mihulka, President of SiriusPoint America Insurance Company, a New York corporation, do hereby certify that the above and foregoing is a full, true and correct copy of Power of Attorney, is still in full force and effect and has not been revoked.

IN WITNESS WHEREOF, I have hereunto set my hand, and affixed the Seal of said Company, on the 8th day of April , 2026

Paul Mihulka
President

Locations: Palm Beach – Merritt Island – Stuart – Morganton, NC

COMPANY QUALIFICATION & CERTIFICATION PACKAGE



WWW.HINTERLANDGROUP.COM

CORPORATE OFFICE:

2051 W Blue Heron Blvd, Riviera Beach, FL 33404
561-640-3503 PH
561-640-3504 FX



INFO@HINTERLANDGROUP.COM

COMPANY QUALIFICATION & CERTIFICATION PACKAGE

COVER PAGE

Corporate Resume ---------- Page 3

Emergency Contact List ---------- Page 11

Minutes of Special Meeting ---------- Page 12

Department of State Letter of Incorporation ---------- Page 13

Sunbiz Information ---------- Page 20

Insurance Information ---------- Page 26

Bonding Capacity Letter ---------- Page 28

State Licenses ---------- Page 29

Business Tax Receipt ---------- Page 33

FDOT Certificate of Qualification ---------- Page 36

Reference Letters ---------- Page 37

Owned Equipment ---------- Page 42

Prior Experience ---------- Page 51

Trenchless Roster ---------- Page 62

Installed Liner Quantities ---------- Page 63

Trenchless Prior Experience ---------- Page 65

2051 W. Blue Heron Blvd.
Riviera Beach, FL 33404
www.hinterlandgroup.com
561-640-3503

CORPORATE RESUME

DANIEL A. DUKE, III
President & CEO

Daniel began his career working on land development projects with his father, and came to realize his passion for the underground industry. In 2006, Daniel III and his father, Daniel Jr, decided to dive into the underground industry full bore and started Hinterland Group out of a small office space in Cocoa, FL. Daniel and his father served as the field crew through the first few years as Hinterland Group developed. Through hard work and dedication to the best final product possible and customer satisfaction the company has grown exponentially over the years. Daniel has worked on projects of every nature related to the underground industry over the years, including all facets of water, waste water and storm water. Daniel remains a key role player at Hinterland Group and stays involved with all the daily operations. His oversight with all the projects ensures that the final product and customer that HG was built on continue to carry on through every project the company completes.

CHASE R. ROGERS, E. I.
COO & Senior Estimator

Chase has been with the HG team since 2008, in its very early stages. Prior to working at HG Chase had spent several years in the construction industry working for both residential contractors and an industrial electrical contractor. Chase began his career at HG halfway through his collegiate career as a field staff member working on lift station rehabilitation. Since then, he has played many roles in the company both in the field and eventually into the office. Chase obtained his Bachelor's degree in civil engineering from the University of Central Florida, before making the transition into the office and has since become a key staff member for HG. He covered the role of Estimator and Project Manager for many years as HG expanded its scope of services and coverage area. As the need for more management grew, Chase has fallen into a managerial role for the company, overseeing the estimating and contract procurement departments and helping to coordinate scheduling and crews with the project management team. Chase has worked on all facets of the underground industry over the years from Stormwater and drainage projects, to large pipeline projects, water and waste water treatment plants, and every type of lift station project imaginable, has Twenty-Seven years of direct experience including various wastewater lift station installations, gravity and force main sewer installations. He provides direct daily supervision of superintendents and skilled labor, management of project schedules, asset management and logistics for entire company personnel and equipment fleet.

CHARLES BREIG
Electrical Contractor

Charles has over 40 years of commercial electrical experience throughout the state of Florida. He currently holds a Florida Electrical Contractors License (EC13003615). Charles joined the HGI team in June 2006.

THOMAS LAESSIG
Master Electrician

Thomas is a Florida State Licensed Electrician (EC13003753) with over 30 years of commercial and industrial electrical experience. Prior to working for HG, Thomas spent several years as an electrician, then Electrical Superintendent, as well as Electrical Project Manager. Thomas then ran his own electrical company for many years. Thomas is well-versed in coordinating with all team members and providing daily supervision to ensure that all electrical projects are efficiently completed.

JACOB CROWE
VP of Trenchless Technologies & Business Development

Jacob joined HG in June 2020 and serves as Vice-President of Trenchless Technologies and Business Development. With twenty-five years' experience in utility infrastructure, Jacob has served as Project Manager for over $50 million of CIPP and geopolymer contracts throughout the southeast. As Vice-President, Jacob continues to manage the overall P&L of our Trenchless Technologies Division and grow our market share throughout the southeast. Holding several contractors' licenses in neighboring states to Florida, Jacob contributes to the trenchless industry by serving on the NASTT No-Dig Conference Program Technical Committee as well as several regional WEF and Southeast Stormwater committees.

BUTCH E. FORRESTER
Director of Operations & Planning Trenchless Technologies

Butch started with HG in July 2016 as a CCTV Operator inspecting pipelines on various projects throughout the State of Florida. In July 2020, Butch was promoted to Assistant Project Manager and then promoted to Project Manager in October 2020. His experience planning and overseeing projects and operational functions within the organization, most recently led him into the role of Director of Operations and Planning Trenchless Technologies. Butch is exceptional with coordinating clients, field personnel and processes to deliver projects on time, within budget and with the desired outcomes aligned to objectives. Recognized throughout his career as being a visionary leader leveraging in-depth knowledge of the marketplace and service industry.

SAUL RIVERA
General Superintendent Trenchless Technologies

Saul began his career in trenchless technologies in 2009 with Lanzo Construction, overseeing well over 1 million linear feet of CIPP installations ranging from 6"-108". With over 15 years experience, Saul has become one of the most knowledgeable and respected superintendents in the in the industry.

DANIEL A. DUKE III

President & CEO

2051 W. Blue Heron Blvd.
Riviera Beach, FL 33404
dduke1@hinterlandgroup.com
561-640-3503

PERSONAL PROFILE

Daniel began his career working on land development projects with his father, and came to realize his passion for the underground industry. In 2006, Daniel III and his father, Daniel Jr, decided to dive into the underground industry full bore and started Hinterland Group out of a small office space in Cocoa, FL. Daniel and his father served as the field crew through the first few years as Hinterland Group developed. Through hard work and dedication to the best final product possible and customer satisfaction the company has grown exponentially over the years. Daniel has worked on projects of every nature related to the underground industry over the years, including all facets of water, waste water and storm water. Daniel remains a key role player at Hinterland Group and stays involved with all the daily operations. His oversight with all the projects ensures that the final product and customer that HG was built on continue to carry on through every project the company completes.

QUALIFICATIONS

- Florida General Contractor's License (CGC1520354)
- Florida Certified Building Contractor's License (CBC1255077)
- Florida Certified Underground and Excavation Contractor License (CUC1224634)

PROJECT RELATED BACKGROUND

ORANGE COUNTY EWRF IN PLANT PUMP STATION REPLACEMENT

Project Owner: Orange County
Project Location: Orlando, FL
Project Value: $1,323,642.00
Role: Project Manager

The Process 395 North In-Plant Pump Station Replacement. Furnishing and installation of a new triplex pumps station with three (3) 47 HP Flygt or ABS submersible pumps. Installation of a new 12 feet diameter wet well structure. Furnishing and Installation of the above ground flanged piping manifold with appurtenances. Installation of a new sanitary sewer manhole and 65 linear feet of 16" DIP force main and 48 linear feet of 24" PVC SDR 2.6 gravity sewer. The conversion of the existing pump station wet well into gravity sewer manhole. Demolition of existing valve vault and existing force main.

NORTH PALM BEACH EARMAN RIVER TRANSFER PUMP STATION

Project Owner: Village of North Palm Beach
Project Location: North Palm Beach, FL
Project Value: $346,680.00
Role: Project Manager

Installation of a water detection switch in the main mops pump station to confirm that there is water in the wet well.

PALM BEACH COUNTY GATOR BLVD WATERMAIN EXTENSION

Project Owner: Palm Beach County
Project Location: Belle Glade, FL
Project Value: $792,003.00
Role: Project Manager

Installation of approximately 4,000 Linear Feet of 12" water main on Gator Blvd from E Sugarhouse Road to Duda Road in Belle Glade and included fire hydrants, appurtenances, fittings and all necessary connections to provide a complete and functional water system.

CHASE R. ROGERS, E.I.

COO & Senior Estimator

2051 W. Blue Heron Blvd.
Riviera Beach, FL 33404
crogers@hinterlandgroup.com
561-640-3503

PERSONAL PROFILE

Chase has been with the HG team since 2008, in its very early stages. Prior to working at HG Chase had spent several years in the construction industry working for both residential contractors and an industrial electrical contractor. Chase began his career at HG halfway through his collegiate career as a field staff member working on lift station rehabilitation. Since then, he has played many roles in the company both in the field and eventually into the office. Chase obtained his Bachelor's degree in civil engineering from the University of Central Florida, before making the transition into the office and has since become a key staff member for HG. He covered the role of Estimator and Project Manager for many years as HG expanded its scope of services and coverage area. As the need for more management grew Chase has fallen into a managerial role for the company, overseeing the estimating and contract procurement departments and helping to coordinate scheduling and crews with the project management team. Chase has worked on all facets of the underground industry over the years from Stormwater and drainage projects, to large pipeline projects, water and waste water treatment plants, and every type of lift station project imaginable.

QUALIFICATIONS:

- Bachelor's Degree in Civil Engineering from University of Central Florida
- Engineering Intern, E.I.
- Member of ASCE
- OSHA Confined Space Training
- Intermediate MOT certification

PROJECT RELATED BACKGROUND

STRUCTURAL REPAIR OF THE FLOW EQUALIZATION BASIN AT ECR

Project Owner: City of West Palm Beach
Project Location: West Palm Beach, FL
Project Value: $528,587.00
Role: On Site Foreman

Complete rehabilitation of the flow equalization basin at the City of West Palm Beach East Central Regional Water Reclamation Facility. Dewatering and cleaning/removal of all silt and sediment from the EQ basin, leak stopping throughout, repairs to damaged and spalling concrete and replacement of piping for the EQ basin floor pumps.

PUMP REPLACEMENT FOR THE RAW WATER BOOSTER PUMP STATION

Project Owner: Collier County
Project Location: Naples, FL
Project Value: $653,400.00
Role: Project Manager

Removal and Replacement of four 300HP split case pumps and their associated VFD drives. All 18" and 24" piping and valves were replaced to accommodate the new pumps.

CUDJOE INNER ISLANDS - MASTER PUMPING STATIONS

Project Owner: Florida Keys Aqueduct Authority
Project Location: Cudjoe Key, FL
Project Value: $2,313,374.00
Role: Project Manager

Removal and Replacement of four 300HP split case pumps and their associated VFD drives. All 18" and 24" piping and valves were replaced to accommodate the new pumps.

THOMAS LAESSIG

Master Electrician

2051 W. Blue Heron Blvd.
Riviera Beach, FL 33404
tlaessig@hinterlandgroup.com
561-640-3503

PERSONAL PROFILE

Thomas is a Florida State Licensed Electrician (EC13003753) with over 30 years of commercial and industrial electrical experience. Prior to working for HG, Thomas spent several years as an electrician, then Electrical Superintendent, as well as Electrical Project Manager. Then ran his own electrical company for many years. With this knowledge, Thomas is well-versed in coordinating with all team members and providing daily supervision to ensure that all electrical projects are efficiently completed.

QUALIFICATIONS:

- Florida Certified Electrical Contractors License (EC13003753)

PROJECT RELATED BACKGROUND

SPRINGTREE GOLF COURSE
Project Owner: City of Sunrise
12 new raw water wells all directional bore.

PALM BEACH COUNTY WATER TREATMENT PLANT
Project Owner: Palm Beach County
8 new raw water wells, new sand filter, and 11 chemical pump upgrades.

MASTER PUMP STATION 1 REHABILITATION
Project Owner: Loxahatchee River District
Rehabilitation of master pump station 1.

ECR PUMP STATION UPGRADE
Project Owner: City of West Palm Beach
Upgrades to 4 existing Deep Well Pump Stations

PBC WTP NEW SCRUBBER STATION
Project Owner: Palm Beach County
3 expansion odor controls

CAMINO REAL DRAWBRIDGE REHABILITATION
Project Owner: Palm Beach County
Rehabilitation of PBC Camino Real drawbridge.

JACOB CROWE

VP of Trenchless Technologies & Business Development

2051 W. Blue Heron Blvd.
Riviera Beach, FL 33404
jcrowe@hinterlandgroup.com
561-640-3503

PERSONAL PROFILE

Jacob joined HG in June 2020 and serves as Vice-President of Trenchless Technologies and Business Development. With twenty-five years' experience in utility infrastructure, Jacob has served as Project Manager for over $50 million of CIPP and geopolymer contracts throughout the southeast. As Vice-President, Jacob continues to manage the overall P&L of our Trenchless Technologies Division and grow our market share throughout the southeast. Holding several contractors' licenses in neighboring states to Florida, Jacob contributes to the trenchless industry by serving on the NASTT No-Dig Conference Program Technical Committee as well as several regional WEF and Southeast Stormwater committees.

QUALIFICATIONS:

- B.A., University of South Carolina, 1994
- PACP, LACP, MACP Certified
- Member ASCE, NASTT, WEF, NUCA
- NASTT Technical Program Committee
- NUCA Trenchless Technology Committee

PROJECT RELATED BACKGROUND

CHARLOTTE COUNTY ANNUAL STORMWATER REHABILITATION
Project Owner: Charlotte County

Stormwater pipeline cleaning, inspection and rehabilitation of over 50,000 linear feet of 12"-84" pipe. Projects have included CIPP, spray-applied geopolymer, point repairs, injection grouting and structure coatings. Particular challenges include isolating systems during repair to minimize impact to diverse coastal marine life, repairing/stabilizing seawalls prior to pipeline rehabilitation, and eliminating infiltration from high water tables that may adversely affect the liner.

A1A OUTFALL REHABILITATION, CONTRACT E5V82
Project Owner: FDOT District 5

Cleaning, inspection and rehabilitation of 2,700' of 58"x91" RCP pipe running between A1A and the Hallifax River in Ormond Beach, FL. Due to unmarked sewer conflicts ten feet deep in the structures that prevented CIPP installation in certain areas of the pipeline, the project benefited from Hinterland's ability to perform multiple trenchless technologies that would still accomplish the end goal of eliminating significant infiltration while extending the life of the system for an additional 50-75 years. Hinterland was able to isolate the system by controlling tidal surges well above the crown of the pipe & performing injection grout on the sections that could not be lined, eliminating the joint infiltration & stabilizing the soil in preparation for paving operations.

43RD STREET STORMWATER REHABILITATION
Project Owner: Manatee County

1,466' of 66" RCP/CMP pipeline rehabilitation with spray-applied geopolymer mortar was chosen by Manatee County to extend the lifetime of this stormwater system an additional 50-75 years. Hinterland proposed the geopolymer application due to low-hanging overhead power running the length of the system that would require expensive temporary electrical line relocation for the duration of a CIPP installation. This allowed Hinterland to return the system to full operation daily during rain events, eliminating costly additional bypass costs to the County.

BUTCH E. FORRESTER

2051 W. Blue Heron Blvd.
Riviera Beach, FL 33404
bforrester@hinterlandgroup.com
561-640-3503

Director of Operations & Planning
Trenchless Technologies

PERSONAL PROFILE

Butch started with HG in July 2016 as a CCTV Operator inspecting pipelines on various projects throughout the State of Florida. In July 2020, Butch was promoted to Assistant Project Manager and then promoted to Project Manager in October 2020. His experience planning and overseeing projects and operational functions within the organization, most recently led him into the role of Director of Operations and Planning Trenchless Technologies. Butch is exceptional with coordinating clients, field personnel and processes to deliver projects on time, within budget and with the desired outcomes aligned to objectives. Recognized throughout his career as being a visionary leader leveraging in-depth knowledge of the marketplace and service industry.

QUALIFICATIONS:

- OSHA Federal Trenching and Excavation
- OSHA Confined Space Training
- Hazmat Operations
- Hazardous Waste Training for Handlers
- OSHA 40-hour Hazwopper
- FDOT - Advanced MOT
- Laser System Operator
- Ground Penetrating Radar – Operator

PROJECT RELATED BACKGROUND

WUD 21-060 CONTINUING CONTRACT FOR WASTEWATER GRAVITY LINES & MANHOLE REHAB

Project Owner: Palm Beach County WUD
Project Location: Belle Glade, FL
Project Value: $19,603,692.00
Role: Director of Operations / Project Manager

Cured-In-Place Pipe Rehabilitation of 35,800 LF of 6" to 30" diameter Sanitary Sewer Pipeline pipe, 1,300 LF of point repairs, 1,750 Lateral Liner installations, 8,590 LF of Lateral Pipe replacements, 70 Clean out installations, 5 manhole replacements, 625 LF of Sanitary Sewer Mainline replacement, 800 Manholes coated and 5,300 SY of Asphalt restoration.

WUD 18-069 CONTINUING CONTRACT FOR WASTEWATER GRAVITY LINES & MANHOLE REHAB

Project Owner: Palm Beach County WUD
Project Location: Boca Raton, FL
Project Value: $5,993,256.00
Role: Project Manager

Cured-In-Place Pipe Rehabilitation of 43,600 LF of 6" to 16" diameter Sanitary Sewer Pipeline pipe, 4,000 LF of point repairs, 130 Lateral Liner installations, 700 Clean out installations, and 1400 LF of Sanitary Sewer Mainline replacement.

201911KW UNIT PRICE CONTRACT FOR SANITARY PIPELINE

Project Owner: Sarasota County
Project Location: Sarasota County, FL
Project Value: $3,822,531.60
Role: Project Manager

Cured-In-Place Pipe Rehabilitation of 57,000 LF of 6" to 36" diameter Sanitary Sewer Pipeline pipe.

SAUL RIVERA

General Superintendent
Trenchless Technologies

2051 W. Blue Heron Blvd.
Riviera Beach, FL 33404
srivera@hinterlandgroup.com
561-640-3503

PERSONAL PROFILE

Saul began his career in trenchless technologies in 2009 with Lanzo Construction, overseeing well over 1 million linear feet of CIPP installations ranging from 6"-108". With over 15 years experience, Saul has become one of the most knowledgeable and respected superintendents in the in the industry.

QUALIFICATIONS:

- OSHA 40-hour Hazwopper
- FDOT - MOT
- PACP
- OSHA Confined Space Training

PROJECT RELATED BACKGROUND

CHARLOTTE COUNTY – DARNELL – STORMWATER COLLECTION SYSTEM REHAB

Project Owner: Charlotte County, FL
Project Location: Charlotte County, FL
Project Value: $900,288.00
Role: Superintendent

Rehabilitation of existing storm sewer pipes, utilizing cured-in-place pipe lining – 1,084 LF of 36" to 72" Cleaning / CCTV / Lining

PALM BEACH COUNTY – FOXWOOD 108"

Project Owner: Palm Beach County Road & Bridge
Project Location: Foxwood Lane, WPB
Project Value: $1,632,353.18
Role: Superintendent

Emergency drainage repair, pipe cleaning, damage assessment, Phase II Liner.

CITY OF WEST PALM BEACH – SANITARY SEWER & STORM PIPE REHAB – 36TH STREET

Project Owner: City of West Palm Beach
Project Location: 36th St, West Palm Beach
Project Value: $1,577,840.00
Role: Superintendent

Cured-in-Place-Pipe (C.I.P.P.) line approximately 250 LF of 42-inch Reinforced Concrete Pipe, 1,591 LF of 18-inch, 194 LF of 15", 223 LF of 12" Vitrified Clay Pipe stormwater pipe. Removal and replacement of 100 LF of 12-15" VCP pipe.

Emergency Contact List

Name	Title	Office Phone	Cell Phone	Email Address
Daniel Duke III	CEO	561-640-3503	954-649-4930	DDuke1@hinterlandgroup.com
Chase Rogers	COO & Senior Estimator	561-640-3503	561-543-9680	CRogers@hinterlandgroup.com
Joe Myer	Director of Health & Safety	561-640-3503	518-965-4680	JMyer@hinterlandgroup.com
Julie Gwinner	Senior Director of HR & Compliance	561-267-8092	561-379-6447	JGwinner@hinterlandgroup.com

Hinterland Group, LLC
2051 W Blue Heron Blvd., Riviera Beach, FL 33404
Ph: 561-640-3503 | Fax: 561-640-3504
info@hinterlandgroup.com | www.hinterlandgroup.com

MINUTES OF SPECIAL MEETING

OF

HINTERLAND GROUP, LLC

Minutes of Special Meeting of Hinterland Group, LLC held at 2051 W. Blue Heron Blvd., Riviera Beach, Florida 33404 on this 3rd day of December, 2025.

The Manager called the meeting to consider the following business: The authorization of Chase Rogers, Julie Gwinner, and Daniel A. Duke, Jr., to sign any and all documentation with regard to the Company.

On motion duly made and carried, the meeting proceeded to approve the authorization.

Chase Rogers, Julie Gwinner, and Daniel A. Duke, Jr., have the authority to sign all documents as stated above.

There being no further business, the meeting was adjourned.

Dated: 12/3/25

Daniel A. Duke, III, CEO
Hinterland Group, LLC

HINTERLAND GROUP, LLC CORPORATE SEAL JUNE 26, 2006 FLORIDA

STATE OF FLORIDA
COUNTY OF PALM BEACH

The foregoing instrument was acknowledged before me this 3rd day of December, 2025 by Daniel A. Duke, III.

Julie Rosado

Notary Public

Printed Name: Julie Rosado

Commission Expires: 06/08/2029

JULIE ROSADO
Notary Public - State of Florida
Commission # HH 685526
My Comm. Expires Jun 8, 2029
Bonded through National Notary Assn.



Detail by Entity Name

Florida Limited Liability Company
HINTERLAND GROUP, LLC

Filing Information

Document Number	L25000403936
FEI/EIN Number	20-5156844
Date Filed	08/28/2025
Effective Date	06/26/2006
State	FL
Status	ACTIVE
Last Event	LC AMENDMENT
Event Date Filed	10/13/2025
Event Effective Date	NONE

Principal Address

2051 W BLUE HERON BLVD
RIVIERA BEACH, FL 33404

Mailing Address

2051 W BLUE HERON BLVD
RIVIERA BEACH, FL 33404

Registered Agent Name & Address

C T CORPORATION SYSTEM
1200 SOUTH PINE ISLAND ROAD
PLANTATION, FL 33324

Name Changed: 09/22/2025

Address Changed: 09/22/2025

Authorized Person(s) Detail

Name & Address

Title MGR

HINTERLAND PURCHASER, LLC
3033 EAST FIRST AENUE
SUITE 700
DENVER, CO 80206

Title VP

CROWE, JACOB
2051 W BLUE HERON BLVD
RIVIERA BEACH, FL 33404

Title COO

ROGERS, CHASE
2051 W BLUE HERON BLVD
RIVIERA BEACH, FL 33404

Title CEO

DUKE, DANIEL A., III
2051 W BLUE HERON BLVD
RIVIERA BEACH, FL 33404

Annual Reports

No Annual Reports Filed

Document Images

10/13/2025 -- LC Amendment	View image in PDF format
09/22/2025 -- LC Amendment	View image in PDF format
08/28/2025 -- Florida Limited Liability	View image in PDF format

L25000403936

(Requestor's Name)

(Address)

(Address)

(City/State/Zip/Phone #)

☐ PICK-UP ☐ WAIT ☐ MAIL

(Business Entity Name)

(Document Number)

Certified Copies _____ Certificates of Status _____

Special Instructions to Filing Officer:

U25000171546 FE 8-29-25

Office Use Only

500456943905

FILED
2025 AUG 28 PM 1:00
SECRETARY OF STATE
TALLAHASSEE, FL

COGENCYGLOBAL

115 N CALHOUN ST., STE. 4
TALLAHASSEE, FL 32301
P: 866.625.0838
F: 866.625.0839
COGENCYGLOBAL.COM

Account#: I20000000088
If there are any issues please contact Cheyanne at 850-202-1882

Date: 09/04/2025

Name: **Delijah Showers**

Reference #: **2876802**

Entity Name: **HINTERLAND GROUP, LLC**

- ☐ Articles of Incorporation/Authorization to Transact Business
- ☐ Amendment
- ☐ Change of Agent
- ☐ Reinstatement
- ☑ Conversion
- ☐ Merger
- ☐ Dissolution/Withdrawal
- ☐ Fictitious Name
- ☐ Other _____

Authorized Amount: **$150**

Signature: *Delijah Showers*

CORPORATE HQ
COGENCY GLOBAL INC.
10 E 40TH ST, 10TH FL
NY, NY 10016
D: +1.212.947.7200
P: 800.221.0102
F: 800.944.6607

EUROPEAN HQ
COGENCY GLOBAL (UK) LIMITED
REGISTERED IN ENGLAND & WALES.
REGISTRY #8010712
6 LLOYDS AVE, UNIT 4CL
LONDON EC3N 3AX
+44 (0)20.3961.3080

ASIA PACIFIC HQ
COGENCY GLOBAL (HK) LIMITED
A HONG KONG LIMITED COMPANY
UNIT B, 1/F, LIPPO LEIGHTON TOWER
103 LEIGHTON RD, CAUSEWAY BAY
HONG KONG
P. +852.2682.9633
F: +852.2682.9790

COGENCYGLOBAL

115 N CALHOUN ST., STE. 4
TALLAHASSEE, FL 32301
P: 866.625.0838
F: 866.625.0839
COGENCYGLOBAL.COM

Account#: I20000000088
If there are any issues please contact Cheyanne at 850-202-1882

Date: 09/04/2025

Name: **Delijah Showers**

Reference #: **2876802**

Entity Name: **HINTERLAND GROUP, LLC**

- ☐ Articles of Incorporation/Authorization to Transact Business
- ☐ Amendment
- ☐ Change of Agent
- ☐ Reinstatement
- ☑ Conversion
- ☐ Merger
- ☐ Dissolution/Withdrawal
- ☐ Fictitious Name
- ☐ Other _____

Authorized Amount: **$150**

Signature: *Delijah Showers*

CORPORATE HQ
COGENCY GLOBAL INC.
10 E 40TH ST, 10TH FL
NY, NY 10016
D: +1.212.947.7200
P: 800.221.0102
F: 800.944.6607

EUROPEAN HQ
COGENCY GLOBAL (UK) LIMITED
REGISTERED IN ENGLAND & WALES,
REGISTRY #8010712
6 LLOYDS AVE, UNIT 4CL
LONDON EC3N 3AX
+44 (0)20.3961.3080

ASIA PACIFIC HQ
COGENCY GLOBAL (HK) LIMITED
A HONG KONG LIMITED COMPANY
UNIT B, 1/F, LIPPO LEIGHTON TOWER
103 LEIGHTON RD, CAUSEWAY BAY
HONG KONG
P: +852.2682.9633
F: +852.2682.9790

ARTICLES OF CONVERSION
FOR
"OTHER BUSINESS ENTITY"
INTO
FLORIDA LIMITED LIABILITY COMPANY

These Articles of Conversion and the attached Articles of Organization are submitted to convert the following "Other Business Entity" into a Florida Limited Liability Company in accordance with Section 605.1045, Florida Statutes:

1. The name of the "Other Business Entity" immediately prior to the filing of these Articles of Conversion is: Hinterland Group Inc. (the "Corporation").

2. The "Other Business Entity" is a Florida profit corporation first incorporated under the laws of the State of Florida effective June 26, 2006 (Document No.: P06000086423). The "Other Business Entity" currently exists on the official records of the jurisdiction under which it is currently incorporated.

3. The "Other Business Entity's" principal office address is: 2051 W Blue Heron Blvd, Riviera Beach, FL 33404.

4. The name of the Florida Limited Liability Company as set forth in the attached Articles of Organization is: Hinterland Group, LLC.

5. The conversion is permitted by, and has been approved in accordance with, all applicable statutes and the applicable law(s) governing the Corporation and the conversion complies with such law(s) and the requirements of section 605.1043, F.S., in effecting the conversion.

6. The conversion shall be effective upon the filing of these Articles of Conversion with the Secretary of State of the State of Florida.

7. The "Converted or Other Business Entity" has agreed to pay any members having appraisal rights the amount to which such members are entitled under ss. 605.1006 and 605.1061-605.1072, F.S.

8. These Articles of Conversion may be executed in one or more counterparts. Any such counterpart, to the extent delivered by means of a facsimile machine or by .pdf, .tif, .gif, .jpeg or similar attachment to an electronic mail message or any electronic signature complying with the federal Electronic Signatures in Global and National Commerce Act of 2000, Public Law 106-229, as amended (e.g., Adobe eSign or DocuSign) (any such delivery, an "Electronic Delivery"), shall be treated in all manner and respects as an original executed counterpart and shall be considered to have the same binding legal effect as if it were the original signed version thereof delivered in person. Each signature delivered by means of Electronic Delivery shall be an "electronic signature" within the meaning of the Uniform Electronic Transaction Act (USA) and the Electronic Commerce Directive (EU) in all jurisdictions where the legislation has been adopted.

[SIGNATURE PAGE FOLLOWS]

[REMAINDER OF PAGE INTENTIONALLY LEFT BLANK]

FILED
2025 AUG 28 PM 1:00
TALLAHASSEE, FL

Signed this 28th day of August, 2025.

Signature of Authorized Representative of Limited Liability Company:

HINTERLAND GROUP, LLC, a Florida limited liability company

By its Manager: HG Business Holdings, LLC, a Florida limited liability company

/s/ Daniel A. Duke III
By: _____
Name: Daniel A. Duke III
Title: Manager

Signature on Behalf of "Other Business Entity":

HINTERLAND GROUP INC., a Florida corporation

/s/ Daniel A. Duke III
By: _____
Name: Daniel A. Duke III
Title: President

FILED
2025 AUG 28 PM 1:00
TALLAHASSEE, FL

[Signature Page to Articles of Conversion]

ACTIVE:35693937.2

ARTICLES OF ORGANIZATION
FOR
HINTERLAND GROUP, LLC

(A Florida Limited Liability Company)

The undersigned, for the purpose of forming a limited liability company under the Florida Revised Limited Liability Company Act (the "Act") hereby adopts the following Articles of Organization (the "Articles").

ARTICLE I – NAME

The name of the limited liability company shall be: Hinterland Group, LLC (the "Company").

ARTICLE II -- ADDRESS

The initial mailing address and principal office address of the Company shall be: 2051 W Blue Heron Blvd, Riviera Beach, FL 33404.

ARTICLE III – NATURE OF BUSINESS

The Company is organized for the purpose of transacting any and all lawful business.

ARTICLE IV – DURATION

The Company shall commence its existence on the date of filing of these Articles with the Secretary of State of the State of Florida. The duration of the Company shall be perpetual.

ARTICLE V – REGISTERED OFFICE AND AGENT

The name and street address of the initial registered agent of the Company is Daniel A. Duke III and 18996 Point Drive, Jupiter, FL 33469.

ARTICLE VI – MANAGEMENT

The Company shall be manager-managed in accordance with the Company's operating agreement. The initial manager shall be: HG Business Holdings, LLC, a Florida limited liability company.

ARTICLE VII – AMENDMENT

The Company reserves the right to amend or repeal any provision contained in these Articles, and any right conferred upon the member is subject to this reservation.

IN WITNESS WHEREOF, the undersigned has executed these Articles this 28th day of August, 2025.

/s/ Andrew Stempel
ANDREW STEMPEL
Authorized Representative

2025 AUG 28 PM 1:00
TALLAHASSEE, FL

FILED

ACTIVE:35694266.2

(In accordance with Section 605.0205(3), Florida Statutes, the execution of this document constitutes an affirmation under the penalties of perjury that the facts stated herein are true.)

ACCEPTANCE BY REGISTERED AGENT

Having been named as registered agent and to accept the service of process for the above-stated limited liability company at the place designated in these Articles, Daniel A. Duke III hereby accepts the appointment as registered agent and agrees to act in this capacity. Daniel A. Duke III further agrees to comply with the provisions of all statutes relating to the proper and complete performance of his duties, and is familiar with and accepts the obligations of his position as registered agent as provided for in Chapter 605, F.S.

/s/Daniel A. Duke III
DANIEL A. DUKE III

DIVISION OF CORPORATIONS

Department of State / Division of Corporations / Search Records / Search by Entity Name /

Detail by Entity Name

Florida Profit Corporation
HINTERLAND GROUP INC.

Filing Information

Document Number	P06000086423
FEI/EIN Number	20-5156844
Date Filed	06/26/2006
State	FL
Status	ACTIVE
Last Event	AMENDED AND RESTATED ARTICLES
Event Date Filed	11/13/2024
Event Effective Date	NONE

Principal Address

2051 WEST BLUE HERON BOULEVARD
RIVIERA BEACH, FL 33404

Changed: 04/30/2018

Mailing Address

2051 WEST BLUE HERON BOULEVARD
RIVIERA BEACH, FL 33404

Changed: 04/30/2018

Registered Agent Name & Address

Duke, Daniel A, III
1015 W Indiantown Road
Suite 101-A
Jupiter, FL 33458

Name Changed: 03/27/2025

Address Changed: 02/13/2019

Officer/Director Detail

Name & Address

Title PSTD

DUKE, DANIEL A, III
992 W. 15TH STREET
RIVIERA BEACH, FL 33404

Annual Reports

Report Year	Filed Date
2023	04/05/2023
2024	04/08/2024
2025	03/27/2025

Document Images

03/27/2025 -- ANNUAL REPORT	View image in PDF format
11/13/2024 -- Amended and Restated Articles	View image in PDF format
04/08/2024 -- ANNUAL REPORT	View image in PDF format
04/05/2023 -- ANNUAL REPORT	View image in PDF format
04/05/2022 -- ANNUAL REPORT	View image in PDF format
03/08/2021 -- ANNUAL REPORT	View image in PDF format
03/02/2020 -- ANNUAL REPORT	View image in PDF format
02/13/2019 -- AMENDED ANNUAL REPORT	View image in PDF format
02/01/2019 -- ANNUAL REPORT	View image in PDF format
04/30/2018 -- Reg. Agent Change	View image in PDF format
01/16/2018 -- ANNUAL REPORT	View image in PDF format
04/12/2017 -- ANNUAL REPORT	View image in PDF format
01/28/2016 -- ANNUAL REPORT	View image in PDF format
11/20/2015 -- Reg. Agent Change	View image in PDF format
01/23/2015 -- ANNUAL REPORT	View image in PDF format
01/10/2014 -- ANNUAL REPORT	View image in PDF format
04/11/2013 -- ANNUAL REPORT	View image in PDF format
04/09/2013 -- Reg. Agent Change	View image in PDF format
04/19/2012 -- ANNUAL REPORT	View image in PDF format
02/17/2011 -- ANNUAL REPORT	View image in PDF format
02/15/2010 -- ANNUAL REPORT	View image in PDF format
04/16/2009 -- ANNUAL REPORT	View image in PDF format
01/20/2008 -- ANNUAL REPORT	View image in PDF format
01/09/2007 -- ANNUAL REPORT	View image in PDF format
06/26/2006 -- Domestic Profit	View image in PDF format

An official website of the United States government Here's how you know

E-Verify Menu

My Company Account

My Company Profile

Company Information

Company Name
Hinterland Group, LLC

Doing Business As (DBA) Name

Company ID
1579646

Enrollment Date
Aug 20, 2020

Employer Identification Number (EIN)
205156844

Unique Entity Identifier (UEI)

DUNS Number

Total Number of Employees
100 to 499

NAICS Code
237

Sector
Construction

Subsector

CERTIFICATE OF LIABILITY INSURANCE

DATE (MM/DD/YYYY)

THIS CERTIFICATE IS ISSUED AS A MATTER OF INFORMATION ONLY AND CONFERS NO RIGHTS UPON THE CERTIFICATE HOLDER. THIS CERTIFICATE DOES NOT AFFIRMATIVELY OR NEGATIVELY AMEND, EXTEND OR ALTER THE COVERAGE AFFORDED BY THE POLICIES BELOW. THIS CERTIFICATE OF INSURANCE DOES NOT CONSTITUTE A CONTRACT BETWEEN THE ISSUING INSURER(S), AUTHORIZED REPRESENTATIVE OR PRODUCER, AND THE CERTIFICATE HOLDER.

IMPORTANT: If the certificate holder is an ADDITIONAL INSURED, the policy(ies) must be endorsed. If SUBROGATION IS WAIVED, subject to the terms and conditions of the policy, certain policies may require an endorsement. A statement on this certificate does not confer rights to the certificate holder in lieu of such endorsement(s).

PRODUCER	CONTACT NAME:	
South Shore Insurance Inc. 909 SE Central Parkway Stuart FL 34994	PHONE (A/C, No, Ext): (772) 426-9973	FAX (A/C, No): (772) 872-5870
	E-MAIL ADDRESS: jennie@southshore-insurance.com	

INSURER(S) AFFORDING COVERAGE		NAIC #
INSURER A :	National Fire Insurance of Hartford	20478
INSURER B :	The Continental Insurance Company	35289
INSURER C :	Starr Indemnity & Liability Company	38318
INSURER D :	Valley Forge Insurance Company	20508
INSURER E :		
INSURER F :		

INSURED

Hinterland Group, LLC
2051 West Blue Heron Blvd
Riviera Beach, FL 33404

COVERAGES **CERTIFICATE NUMBER:** **REVISION NUMBER:**

THIS IS TO CERTIFY THAT THE POLICIES OF INSURANCE LISTED BELOW HAVE BEEN ISSUED TO THE INSURED NAMED ABOVE FOR THE POLICY PERIOD INDICATED. NOTWITHSTANDING ANY REQUIREMENT, TERM OR CONDITION OF ANY CONTRACT OR OTHER DOCUMENT WITH RESPECT TO WHICH THIS CERTIFICATE MAY BE ISSUED OR MAY PERTAIN, THE INSURANCE AFFORDED BY THE POLICIES DESCRIBED HEREIN IS SUBJECT TO ALL THE TERMS, EXCLUSIONS AND CONDITIONS OF SUCH POLICIES. LIMITS SHOWN MAY HAVE BEEN REDUCED BY PAID CLAIMS.

INSR LTR	TYPE OF INSURANCE	ADDL INSD	SUBR WVD	POLICY NUMBER	POLICY EFF (MM/DD/YYYY)	POLICY EXP (MM/DD/YYYY)	LIMITS	
A	X COMMERCIAL GENERAL LIABILITY CLAIMS-MADE X OCCUR X XCU Coverage Included X Primary/Non Contributory GEN'L AGGREGATE LIMIT APPLIES PER: POLICY X PRO-JECT LOC OTHER:	x	x	8037267123	01/31/2026	01/31/2027	EACH OCCURRENCE DAMAGE TO RENTED PREMISES (Ea occurrence) MED EXP (Any one person) PERSONAL & ADV INJURY GENERAL AGGREGATE PRODUCTS - COMP/OP AGG $	$ 1,000,000 $ 100,000 $ 15,000 $ 1,000,000 $ 2,000,000 $ 2,000,000 $
A	AUTOMOBILE LIABILITY X ANY AUTO ALL OWNED AUTOS SCHEDULED AUTOS X HIRED AUTOS X NON-OWNED AUTOS	x	x	8037267106	01/31/2026	01/31/2027	COMBINED SINGLE LIMIT (Ea accident) BODILY INJURY (Per person) BODILY INJURY (Per accident) PROPERTY DAMAGE (Per accident) $	$ 1,000,000 $ $ $ $
B	x UMBRELLA LIAB x OCCUR EXCESS LIAB CLAIMS-MADE DED RETENTION $			8037267090	01/31/2026	01/31/2027	EACH OCCURRENCE AGGREGATE $	$ 4,000,000 $ 4,000,000 $
D	WORKERS COMPENSATION AND EMPLOYERS' LIABILITY ANY PROPRIETOR/PARTNER/EXECUTIVE OFFICER/MEMBER EXCLUDED? Y / N: N (Mandatory in NH) If yes, describe under DESCRIPTION OF OPERATIONS below	N / A	x	8037267137	01/31/2026	01/31/2027	x PER STATUTE OTH-ER E.L. EACH ACCIDENT E.L. DISEASE - EA EMPLOYEE E.L. DISEASE - POLICY LIMIT	 $ 1,000,000 $ 1,000,000 $ 1,000,000
C	INLAND MARINE	X		ITA100065445525	1/31/2026	1/31/2027	Scheduled Equip. Installation Floater	6,773,444 $100,000/$500,00

DESCRIPTION OF OPERATIONS / LOCATIONS / VEHICLES (ACORD 101, Additional Remarks Schedule, may be attached if more space is required)

Additional Insured, Primary & Non-Contributory and Waiver of Subrogation apply if required by written contract, subject to policy terms, and provided the contract was executed prior to loss. The insurer will endeavor to provide 30 days' notice of cancellation; failure to do so shall impose no obligation or liability upon the insurer, its agents, or representatives. Additional Insured, Primary & Non-Contributory and Waiver of Subrogation is subject to all policy terms, conditions, and endorsements; please refer to the actual policies for governing language.

CERTIFICATE HOLDER

FOR BIDDING PURPOSES ONLY

CANCELLATION

SHOULD ANY OF THE ABOVE DESCRIBED POLICIES BE CANCELLED BEFORE THE EXPIRATION DATE THEREOF, NOTICE WILL BE DELIVERED IN ACCORDANCE WITH THE POLICY PROVISIONS.

AUTHORIZED REPRESENTATIVE Jennie Janman <JNL>

© 1988-2014 ACORD CORPORATION. All rights reserved.

March 24, 2026

Re: Hinterland Group, LLC – Surety Reference Letter

To Whom It May Concern,

HUB International is the bonding agent for Hinterland Group, LLC (Hinterland). They are bonded by SiriusPoint Insurance Company (A-/AM Best) and Berkley Insurance Company (A+ / AM Best). Hinterland has an excellent reputation in the community. Hinterland has the ability to bond $55,000,000 for single jobs and $135,000,000 in aggregate.

We welcome the opportunity to execute the necessary bonds provided they meet the current underwriting guidelines, and the provisions are acceptable to both Hinterland and the sureties list above.

Should you have any questions or concerns, please do not hesitate to call.

Sincerely,



Vinny Carbone

VP – Surety/Bonds

HUB International

Ron DeSantis, Governor

Melanie S. Griffin, Secretary

Florida dbpr

STATE OF FLORIDA
DEPARTMENT OF BUSINESS AND PROFESSIONAL REGULATION

CONSTRUCTION INDUSTRY LICENSING BOARD

THE UNDERGROUND UTILITY & EXCAVATION CO HEREIN IS CERTIFIED UNDER THE PROVISIONS OF CHAPTER 489, FLORIDA STATUTES

DUKE, DANIEL AMOS III

HINTERLAND GROUP, LLC
2051 W BLUE HERON BLVD
RIVIERA BEACH FL 33404

LICENSE NUMBER: CUC1224634

EXPIRATION DATE: AUGUST 31, 2026

Always verify licenses online at MyFloridaLicense.com

ISSUED: 10/21/2025

Do not alter this document in any form.

This is your license. It is unlawful for anyone other than the licensee to use this document.

Ron DeSantis, Governor

Melanie S. Griffin, Secretary

Florida dbpr

STATE OF FLORIDA
DEPARTMENT OF BUSINESS AND PROFESSIONAL REGULATION

CONSTRUCTION INDUSTRY LICENSING BOARD

THE GENERAL CONTRACTOR HEREIN IS CERTIFIED UNDER THE
PROVISIONS OF CHAPTER 489, FLORIDA STATUTES

DUKE, DANIEL AMOS III

HINTERLAND GROUP, LLC
2051 W BLUE HERON BLVD
RIVIERA BEACH FL 33404

LICENSE NUMBER: CGC1520354

EXPIRATION DATE: AUGUST 31, 2026

Always verify licenses online at MyFloridaLicense.com

ISSUED: 10/15/2025

Do not alter this document in any form.

This is your license. It is unlawful for anyone other than the licensee to use this document.

Ron DeSantis, Governor

Melanie S. Griffin, Secretary

Florida dbpr

STATE OF FLORIDA
DEPARTMENT OF BUSINESS AND PROFESSIONAL REGULATION

ELECTRICAL CONTRACTORS' LICENSING BOARD

THE ELECTRICAL CONTRACTOR HEREIN IS CERTIFIED UNDER THE
PROVISIONS OF CHAPTER 489, FLORIDA STATUTES

BREIG, CHARLES J

HINTERLAND GROUP INC
7161 NW 74TH STREET
MEDLEY FL 33166

LICENSE NUMBER: EC13003615

EXPIRATION DATE: AUGUST 31, 2026

Always verify licenses online at MyFloridaLicense.com

ISSUED: 05/16/2024

Do not alter this document in any form.

This is your license. It is unlawful for anyone other than the licensee to use this document.

Ron DeSantis, Governor

Melanie S. Griffin, Secretary

Florida dbpr

STATE OF FLORIDA
DEPARTMENT OF BUSINESS AND PROFESSIONAL REGULATION

CONSTRUCTION INDUSTRY LICENSING BOARD

THE BUILDING CONTRACTOR HEREIN IS CERTIFIED UNDER THE
PROVISIONS OF CHAPTER 489, FLORIDA STATUTES

DUKE, DANIEL AMOS III

HINTERLAND GROUP, LLC
2051 W BLUE HERON BLVD
RIVIERA BEACH FL 33404

LICENSE NUMBER: CBC1255077

EXPIRATION DATE: AUGUST 31, 2026

Always verify licenses online at MyFloridaLicense.com

ISSUED: 10/14/2025

Do not alter this document in any form.

This is your license. It is unlawful for anyone other than the licensee to use this document.

Ron DeSantis, Governor

Melanie S. Griffin, Secretary

STATE OF FLORIDA
DEPARTMENT OF BUSINESS AND PROFESSIONAL REGULATION

ELECTRICAL CONTRACTORS' LICENSING BOARD

THE ELECTRICAL CONTRACTOR HEREIN IS CERTIFIED UNDER THE
PROVISIONS OF CHAPTER 489, FLORIDA STATUTES

LAESSIG, THOMAS

HINTERLAND GROUP, LLC
2051 W BLUE HERON BLVD
RIVIERA BEACH FL 33404

LICENSE NUMBER: EC13003753

EXPIRATION DATE: AUGUST 31, 2026

Always verify licenses online at MyFloridaLicense.com

ISSUED: 02/17/2026

Do not alter this document in any form.

This is your license. It is unlawful for anyone other than the licensee to use this document.

ONLINE SERVICES

Apply for a License
Verify a Licensee
View Food & Lodging Inspections
File a Complaint
Continuing Education Course Search
View Application Status
Find Exam Information
Unlicensed Activity Search
AB&T Delinquent Invoice & Activity List Search

LICENSEE DETAILS

7:49:25 AM 2/19/2026

Licensee Information

Name:	**LAESSIG, THOMAS (Primary Name)**
	HINTERLAND GROUP, LLC (DBA Name)
Main Address:	**6839 CYPRESS COVE CRICLE JUPITER Florida 33458**
County:	**PALM BEACH**
License Location:	**2051 W BLUE HERON BLVD RIVIERA BEACH FL 33404**
County:	**PALM BEACH**

License Information

License Type:	**Certified Electrical Contractor**
Rank:	**Cert Electrical**
License Number:	**EC13003753**
Status:	**Current,Active**
Licensure Date:	**12/06/2007**
Expires:	**08/31/2026**

Special Qualifications	Qualification Effective

Alternate Names

View Related License Information
View License Complaint

The State of Florida is an AA/EEO employer. Copyright ©2023 Department of Business and Professional Regulation - State of Florida. Privacy Statement

Under Florida law, email addresses are public records. If you do not want your email address released in response to a public-records request, do not send electronic mail to this entity. Instead, contact the office by phone or by traditional mail. If you have any questions, please contact 850.487.1395. *Pursuant to Section 455.275(1), Florida Statutes, effective October 1, 2012, licensees licensed under Chapter 455, F.S. must provide the Department with an email address if they have one. The emails provided may be used for official communication with the licensee.

ANNE M. GANNON
CONSTITUTIONAL TAX COLLECTOR
Serving Palm Beach County
Serving *you.*

P.O. Box 3353, West Palm Beach, FL 33402-3353_
www.pbctax.gov Tel: (561) 355-2264

****LOCATED AT****
2051 W BLUE HERON BLVD
RIVIERA BEACH FL 33404

TYPE OF BUSINESS	OWNER	CERTIFICATION #	RECEIPT #/DATE PAID	AMT PAID	BILL #
UNDERGROUND UTILITY & EXCAVATION	DUKE DANIEL AMOS III	CUC1224634	B25.615835 7/3/2025	27.50	B40129110

This document is valid only when receipted by the Tax Collector's Office.

HINTERLAND GROUP LLC
HINTERLAND GROUP LLC
2051 WEST BLUE HERON BLVD
RIVIERA BEACH FL 33404

STATE OF FLORIDA
PALM BEACH COUNTY
2025 / 2026 LOCAL BUSINESS TAX RECEIPT
LBTR Number: 201139576
EXPIRES: 9/30/2026

This receipt MUST be conspicuously displayed at the place of business and in such a manner as to be open to the view of the public.

ANNE M. GANNON
CONSTITUTIONAL TAX COLLECTOR
Serving Palm Beach County
Serving *you.*

P.O. Box 3353, West Palm Beach, FL 33402-3353_
www.pbctax.gov Tel: (561) 355-2264

****LOCATED AT****
2051 W BLUE HERON BLVD
RIVIERA BEACH FL 33404

TYPE OF BUSINESS	OWNER	CERTIFICATION #	RECEIPT #/DATE PAID	AMT PAID	BILL #
ELECTRICAL CONTRACTOR	BREIG CHARLES J	EC13003615	B25.615922 7/3/2025	99.00	B40141881

This document is valid only when receipted by the Tax Collector's Office.

HINTERLAND GROUP LLC
HINTERLAND GROUP LLC
2051 WEST BLUE HERON BLVD
RIVIERA BEACH FL 33404

STATE OF FLORIDA
PALM BEACH COUNTY
2025 / 2026 LOCAL BUSINESS TAX RECEIPT
LBTR Number: 2015082363
EXPIRES: 9/30/2026

This receipt MUST be conspicuously displayed at the place of business and in such a manner as to be open to the view of the public.

ANNE M. GANNON
CONSTITUTIONAL TAX COLLECTOR
Serving Palm Beach County
Serving *you.*

P.O. Box 3353, West Palm Beach, FL 33402-3353_
www.pbctax.gov Tel: (561) 355-2264

****LOCATED AT****
2051 W BLUE HERON BLVD
RIVIERA BEACH FL 33404

TYPE OF BUSINESS	OWNER	CERTIFICATION #	RECEIPT #/DATE PAID	AMT PAID	BILL #
GENERAL CONTRACTOR	DUKE DANIEL AMOS III	CGC1520354	B25.619915 7/8/2025	99.00	B40141880

This document is valid only when receipted by the Tax Collector's Office.

HINTERLAND GROUP LLC
HINTERLAND GROUP LLC
2051 WEST BLUE HERON BLVD
RIVIERA BEACH FL 33404

STATE OF FLORIDA
PALM BEACH COUNTY
2025 / 2026 LOCAL BUSINESS TAX RECEIPT
LBTR Number: 2015082364
EXPIRES: 9/30/2026

This receipt MUST be conspicuously displayed at the place of business and in such a manner as to be open to the view of the public.

ANNE M. GANNON
CONSTITUTIONAL TAX COLLECTOR
Serving Palm Beach County
Serving you.

P.O. Box 3353, West Palm Beach, FL 33402-3353
www.pbctax.gov Tel: (561) 355-2264

LOCATED AT
2051 W BLUE HERON BLVD
RIVIERA BEACH FL 33404

TYPE OF BUSINESS	OWNER	CERTIFICATION #	RECEIPT #/DATE PAID	AMT PAID	BILL #
BUILDING CONTRACTOR	DUKE DANIEL AMOS III	CBC1255077	B25.616024 7/3/2025	99.00	B40150648

This document is valid only when receipted by the Tax Collector's Office.

HINTERLAND GROUP LLC
HINTERLAND GROUP LLC
2051 WEST BLUE HERON BLVD
RIVIERA BEACH FL 33404

STATE OF FLORIDA
PALM BEACH COUNTY
2025 / 2026 LOCAL BUSINESS TAX RECEIPT
LBTR Number: 2018108321
EXPIRES: 9/30/2026

This receipt MUST be conspicuously displayed at the place of business and in such a manner as to be open to the view of the public.

City of Riviera Beach
600 West Blue Heron Blvd
Riviera Beach, FL 33404
(561) 845-4000

BUSINESS TAX RECEIPT/CERTIFICATE OF USE

Business Name:	Hinterland Group Inc.
Business Location:	2051 W Blue Heron Blvd Riviera Beach, FL 33404
Owner:	HINTERLAND GROUP INC
BTR/COU Number	BTR-001961-2024
Issued Date:	9/30/2024
Expiration Date:	9/30/2025
Business Type(s):	519-520 Transportation / Truck Service - Vehicle (Each) (+) 325 Office - Business Management 100-105 Contractors (Number of Employees) (+)
Mailing Address:	2051 W Blue Heron Blvd Riviera Beach, FL 33404
Receipt Type:	Business Tax Receipt
Classification:	Commercial Business
Fees Paid:	$8,586.69

The best waterfront city in which to live, work, and play.

MUST RENEW ON OR BEFORE EXPIRATION DATE

TO BE POSTED IN A CONSPICUOUS PLACE

Florida Department of Transportation

RON DESANTIS
GOVERNOR

605 Suwannee Street
Tallahassee, FL 32399-0450

JARED W. PERDUE, P.E.
SECRETARY

May 02,2025

HINTERLAND GROUP, INC
2051 WEST BLUE HERON BOULEVARD
RIVIERA BEACH, FLORIDA 33404

RE: CERTIFICATE OF QUALIFICATION

The Department of Transportation has qualified your company for the type of work indicated below.

FDOT APPROVED WORK CLASSES:
DRAINAGE, ELECTRICAL WORK, Water & Wastewater, Manhole Rehabilitation, Lift Stations, Pipe Lining & Pipe Desilting.

Unless notified otherwise, this Certificate of Qualification will expire **6/30/2026.**

In accordance with Section 337.14(1), Florida Statutes, an application for qualification must be filed within (4) months of the ending date of the applicant's audited annual financial statements.

If the company's maximum capacity has been revised, it may be accessed by logging into the Contractor Prequalification Application System via the following link:
HTTPS://fdotwp1.dot.state.fl.us/ContractorPreQualification

Once logged in, select "View" for the most recently approved application, and then click the "Manage" and "Application Summary" tabs.

The company may apply for a Revised Certificate of Qualification at any time prior to the expiration date of this certificate according to Section 14-22.0041(3), Florida Administrative Code (F.A.C.), by accessing the most recently approved application as shown above and choosing "Update" instead of "View." If certification in additional classes of work is desired, documentation is needed to show that the company has performed such work.

All prequalified contractors are required by Section 14-22.006(3), F.A.C., to certify their work underway monthly in order to adjust maximum bidding capacity to available bidding capacity. You can find the link to this report at the website shown above.

Sincerely,

James E. Taylor II

James E. Taylor II, Prequalification Supervisor
Contracts Administration Office

JTII

References

Luke Jones
Jonathan's Landing POA Operations Manager
Services provided – cleaning, assessment, pipe replacement and pipe lining for POA and golf course
lukej@jlpoa.com
561-743-2032

Mary West
Crosswinds HOA President
Services provided – cleaning, assessment, grouting and pipelining for HOA
kmtnawest@icloud.com
404-702-1698

Dave Myers
Emerald Point HOA
Services provided – cleaning, assessment, pipe replacement and pipe lining for HOA
damyers@nycap.rr.com
518-265-4343

BID NUMBER: 24P020 LR

City of Titusville
REFERENCE CHECK WORKSHEET

BID NAME: Utility Contractors' Services Repair, Maintenance, Replacement

VENDOR NAME: Hinterland Group

Reference Check Company Name: City of Riviera Beach - sdoyle@rivierabeach.org

What specific services does this company perform for your company? Please provide as much detail about the project as possible.

The firm performs every aspect of lift station rehabilitation, repair and maintenance, up to and including; pump replacement; pipe, valve & fitting replacement; ARV replacement; electrical panels replacement; sewer lines; force mains; wet-well lining, civil site-work including demolition, fencing, slabs, landscaping, sidewalk, access drives, dewatering, bypass pumping, etc.

Was the company's performance satisfactory?

The company's performance has been exemplary. They understand our budget and their work-product is in proportion to our financing They provide a quality product and they have met or exceeded our expectations.

Did the company keep to a set schedule and execute projects in a timely manner? If not, how long of a delay(s) was incurred and what were the reasons for the delay(s)?

We schedule work using a 'Team' approach, where we understood that most businesses are experiencing limited resources and manpower. We created a sequence of work to move from one lift station to the next. We had one major delay and it is because of our pump vendor and waiting for parts.

Did the company have sufficient resources (e.g., staff, equipment, etc.) to fulfill their contractual requirements?

Yes, they do. We schedule our work so that it integrated into the work being performed. For example, we had one lift station that was challenging and they brought in several crews to literally tackle the entire station, that in 4 days the station was returned to service. They have numerous pieces of equipment and tools to manage a project.

Was your company satisfied with the personnel that were assigned to your company? Did the company make the appropriate efforts to assure quality, knowledgeable personnel are assigned as required?

Very satisfied with management of our projects. They assign a Hinterland Project Manager and a Financial Administrator. They always responded to calls and emails. We assigned a Utility Project Manager (PM) / Supervisor on the City side. The two PM's create a scope of work then generate a work order and we issue Notices to Proceed.

Do you know if your company experienced any invoicing problems?

Generally not an issue with Invoices. Invoices are vented in the field first with the respective PM and then routed through a supervisor for final review and then forwarded to AP for processing. If an invoice needs to be adjusted then a simple phone call and email to their PM or Financial Administrator and it is corrected.

Was your company aware of any issues regarding the payments of employees' salaries?

We are not aware of any issues related to payment of employee salaries and / or sub-vendors. It appears that many employee are veterans in the industry and have been with Hinterland for many years.

How responsive and effective was the company in resolving any disputes that may have developed with staff?

They have been very responsive in dealing with staff. The PM's (Hinterland and USD) worked out any disputes. If it needed further venting than each PM would bring in another person to QA/QC the dispute and recommend a resolution.

Additional Comments:

They are a Great Team player with us and have an understanding of our budget, purchasing process and scope. We are fortunate that we have sufficient funds allocated to Lift Station Rehabilitation that we are able to use their services over multiple years.

Would you consider hiring this company again?

☑ Yes ☐ No

Name: Steven J. Doyle, PE., Assist. Exec. Dir., Utility Special District

Date: Friday March 8, 2023

BROWARD COLLEGE

RFP-2024-082-OA - STORM DRAIN CLEANING, REPAIRS AND MAINTENANCE SERVICES

ATTACHMENT I - PERFORMANCE EVALUATION SURVEY FORM

Please email this form to Orlando Aponte at oaponte@broward.edu once completed in **PDF format** prior to 2:30 p.m. ET on: Wednesday, July 31, 2024	
This form is to be completed by the organization providing the reference **only**.	
Name of Company (Respondent to this RFP) on which reference is being provided:	Hinterland Group Inc.
Company providing reference:	Manatee County
Address of company providing reference:	4520 66th Street West, Bradenton, FL 34210
Name/title of person providing reference:	Jeff Anthony, Project Manager
Phone number of person providing reference:	941-749-3046
Email address of person providing reference:	Jeff.Anthony@mymanatee.org
Date(s) of Service:	April 2021 - Ongoing Annual Contract
Annual Aggregate Dollar Amount and/or Dollar Amount of Service	$4,786,790.00

Please evaluate and rate the performance of the company noted above (the Proposer to this RFP), using the following ratings scale: 0 = Do Not Hire (our company would not hire them again) 1 = Poor (does not meet minimum standards) 2 = Fair (barely meets minimum standards) 3 = Average (meets minimum standards) 4 = Good (meets defined minimum requirements and occasionally exceeds your expectations) 5 = Excellent or Outstanding (always exceed your expectations)	**Insert YOUR RATINGS in this column**
1. QUALITY OF SERVICE/PROJECT/PRODUCT: Did they perform service and provide project/product as specified and/or as proposed? **Please rate.**	5
2. PERSONNEL: Regarding the performance and workmanship of company personnel. **Please rate.**	5
3. TIMELINESS/RESPONSIVENESS: Was the company's timeliness and responsiveness satisfactory to your entity's needs? **Please rate.**	4
4. OVERALL PERFORMANCE: Was company willing to and/or did they go above and beyond project requirements, i.e., within reason, without altering specification? **Please rate.**	5
5. CUSTOMER SERVICE: If problems were caused or encountered, were they addressed and resolved promptly? **Please rate customer service.**	5
6. DEADLINES/MILESTONES/BUDGET: Was the company able to meet service delivery schedule and/or perform service to meet established deadlines/milestones/budget? **Please rate.**	5
7. ABILITY TO PERFORM: Did the company have technical expertise, facilities, and equipment to perform as specified? **Please rate.**	5
8. YEARLY CONTRACTS: If performing a yearly term contract, was the company able to adequately manage for the duration? **Please rate yearly contract performance.**	5
9. INTERACTION: Did their company representative work well with your entity's staff in providing these services or in performing yearly continuing contract? **Please rate.**	5
10. FUTURE PROJECTS: Most importantly, would you use this firm again? **Yes? No? Comments?**	YES

COMMENTS: Are there any additional comments you would like to add?

Hinterland has been great to work with, Prompt on all requests and have a great group to handle any stormwater projects we have asked them to complete.

Reference surveys submitted should be no more than twelve (12) months old. Please clearly identify the project name and number the reference is being submitted for.

CITY OF CAPE CORAL PROJECT NAME: Lining of Drainage Pipes **Project #:** BPW2415MM

Respondent Information: **Please Return Completed Form with bid/proposal submittal.**

NAME:	Daniel Duke III		
TITLE:	President		
COMPANY:	Hinterland Group Inc.		
EMAIL:	info@hinterlandgroup.com	PHONE #	561-640-3503

BIDDER/PROPOSER TO ENTER DETAILS OF A PROJECT PERFORMED FOR ABOVE REFERENCE RESPONDANT) If applicable, Submit references for projects of similar scope and size as the project being bid upon.

Reference Name:	Chauncey Mathis	Reference Title:	Project Manager
Reference Email:	cmathis@pbgfl.com	Reference Phone #:	561-804-7044

Reference Project Name:	Project Address:	Project Cost:
Stormwater Infrastructure Maintenance & Repair	Various locations in Palm Beach Gardens	$1,027,255.00

Summarize Scope:

Stormwater infrastructure maintenance and repair services to the City's several premises and locations - Lines from 12in - 84in

You as an individual or your company has been given as a reference on the project identified above. Please provide your responses to the question below. Indicate: "yes" or "no"

1. Did this company have the proper resources and personnel by which to get the job done?	Yes
2. Were problems encountered with the company's work performance?	No
3. Were change orders or contract amendments issued, other than owner initiated?	No
4. Was the job completed on time?	Yes
5. Was the job completed within budget?	Yes
6. On a scale of 1-10, with 10 being the best, how would you rate the overall work performance including professionalism; final product; personnel; resources.	10
7. Would you rehire this company for future work?	Yes

Please provide any additional comments you deem important regarding this company and their work performed.

Please submit non-City of Cape Coral employees as references.

Chauncey Mathis

Reference Name (Print)

C. Mathis

Reference Signature

12/04/2023

Date

Vendor Name Submitting Bid: Hinterland Group Inc.

VENDOR PERFORMANCE REFERENCE VERIFICATION SURVEY FORM

NW 45th St. and Crystal Lake Drive. Drainage Improvements, ITBC#24-24-VP

Agency Name: Palm Beach County
Agency Contact: Chase Miller, Public Works Superintendent
Contact E-mail: CMiller1@pbcgov.org
Contact Phone #: 561-233-3999

Please rate your experience with the vendor. The completed questionnaire form must be attached with your response. Thank you.

Please use the following rating scale to answer the questions:

Ratings: **1 Poor** **2 Good** **3 Exceptional** **4 Not Applicable**

1. Rate the level of commitment of the Contractor when performing the services. 3
2. Rate the competency and accessibility of the personnel performing the services. 3
3. Rate the Contractor's success at keeping you updated and informed of problems and issues. 3
4. Rate the Contractor's knowledge of procedures required by regulatory agencies. 3
5. Rate the Contractor's success at working cooperatively with Owner's personnel. 3
6. Rate the Contractor's ability to perform work promptly or within the time specified, without delay. 3
7. Rate the accuracy, completeness and proper documentation of invoices. 3
8. Rate the completion, satisfaction and the quality of work performed by the Contractor. 3
9. Rate the overall quality of performance of the Contractor. 3

Additional comments:
Palm Beach County PtB uses Hinterland for a Variety of projects. They have always been the most professional and dedicated Vendor.

Reference Name: Chase M. Miller Title: Public Works Superintendent
(Please print – Person completing survey)

Signature: _____ Date: 06/27/24
(Person completing survey)

******THIS SECTION FOR CITY USE ONLY******

Reference Verified by City Employee: _____ Date: _____



Owned Equipment

Asset ID	Category	Type	Description
207	EQUIPMENT	EXCAVATOR	Bobcat Compact Excavator
208	EQUIPMENT	EXCAVATOR	Bobcat Mini Excavator
209	EQUIPMENT	SKID STEER	Bobcat Skid Steer Loader T300
215	EQUIPMENT	EXCAVATOR	Cat 328D LCR Excavator 328D
216	EQUIPMENT	EXCAVATOR	2017 Caterpillar Excavator 325 FLCR
217	EQUIPMENT	LULL	Caterpillar Forklift TL1055
218	EQUIPMENT	EXCAVATOR	2016 Caterpillar Mini Excavator 305_5E2CR
219	TRAILER	HAULER	1995 Center Trailer
222	VEHICLE	FLAT BED	2013 Chevy Silverado 3500 Pickup Truck
224	VEHICLE	PICKUP	2016 Chevy Silverado 1500 Pickup Truck
225	VEHICLE	PICKUP	2017 Chevy Silverado 1500 Pickup Truck
226	VEHICLE	PICKUP	2017 Chevy Silverado 2500 Truck
230	TRAILER	HAULER	Crosley Dual Axle Trailer
231	TRAILER	HAULER	Crosley Trailer
232	TRAILER	HAULER	Crosley Trailer
236	TRAILER	HAULER	2001 Interstate Trailer Flat Bed
239	VEHICLE	BOILER	1995 Ford Tandem L9000W/Propane Boiler
242	VEHICLE	PICKUP	2008 Ford Pickup Truck F-250
245	VEHICLE	UTILITY	2006 Ford 750 Truck
248	VEHICLE	PICKUP	2004 Ford F350 Truck
250	VEHICLE	UTILITY	2012 Ford F550 Truck
253	VEHICLE	TANKER	2009 Freightliner Columbia
254	VEHICLE	TANKER	2009 Freightliner Columbia
255	VEHICLE	TANKER	2011 Freightliner M-2
256	VEHICLE	TV TRUCK	2002 Freightliner Cues 1
257	VEHICLE	TANDEM	2011 Freightliner TANDEM
258	TRAILER	CARGO	FRRV Trailer
259	EQUIPMENT	LIFT	Genie Personal Lift (Silver)
260	VEHICLE	VAN	2006 GMC Savana 3500 Cargo Van

261	VEHICLE	PICKUP	2004 GMC Sierra 1500 Pickup Truck
263	VEHICLE	PICKUP	2011 GMC Sierra Denali Pickup Truck
264	VEHICLE	PICKUP	2014 GMC Sierra 1500 Pickup Truck
267	VEHICLE	PICKUP	2006 GMC 1500 Sierra Pickup Truck
268	VEHICLE	PICKUP	2016 GMC Sierra 2500 Pickup Truck
269	VEHICLE	PICKUP	2016 GMC Sierra C25 Pickup Truck
270	VEHICLE	FLAT BED	2015 GMC Sierra C35 Pickup Truck
271	VEHICLE	UTILITY	2009 GMC TK Kodiac Service Truck/Crane 4x4
272	VEHICLE	TV TRUCK	2009 GMC TC500 Truck
274	VEHICLE	PICKUP	2017 GMC Sierra 2500 Truck
279	VEHICLE	VAN	2014 GMC Savana 1500 Work Van
280	EQUIPMENT	PUMP	Gorman Pump
285	TRAILER	BLASTER	Power Washer Trailer Mount
287	VEHICLE	TV TRUCK	2010 Horton Cues 2 International Chassis
288	EQUIPMENT	COMPRESSOR	Ingersoll Rand Air Compressor
289	EQUIPMENT	COMPRESSOR	Ingersoll Rand Mounted Compressor
291	VEHICLE	DUMP	2006 International 4300 Flat Bed Dump Truck
292	VEHICLE	BOX	2003 International Box Truck
295	VEHICLE	REEFER	2009 International 4400 Reefer Truck
296	VEHICLE	REEFER	2009 International 4400 Truck
304	TRAILER	HAULER	2000 Draggin Trailer (Pressure Washer Trailer)
307	EQUIPMENT	ROLLER	Bomag Roller
309	EQUIPMENT	EXCAVATOR	2015 John Deere 35G Compact Excavator
310	EQUIPMENT	EXCAVATOR	2015 John Deere 35G Compact Excavator
311	EQUIPMENT	EXCAVATOR	John Deere 35 D Compact Excavator
313	EQUIPMENT	SKID STEER	2016 John Deere 323E Compact Track Loader
314	EQUIPMENT	EXCAVATOR	John Deere 85G Excavator
317	EQUIPMENT	SKID STEER	2015 John Deere 329E Skid Steer
318	EQUIPMENT	LOADER	2013 John Deere 304K Wheel Loader
319	EQUIPMENT	LOADER	2004 John Deere 324H Wheel Loader
322	VEHICLE	BOILER	2017 Kenworth T880 Boiler Truck
323	VEHICLE	VAC	2016 Kenworth Vac Truck
325	EQUIPMENT	EXCAVATOR	2017 Komatsu PC228USLC-10 Hydraulic Excavator
326	EQUIPMENT	EXCAVATOR	2017 Komatsu PC138USLC-11 Hydraulic Excavator
327	EQUIPMENT	EXCAVATOR	2004 Komatsu PC228USLC-3 Hydraulic Excavator
329	TRAILER	CARGO	Look Enclosed Trailer
330	TRAILER	CARGO	Look Enclosed Steam Trailer

331	EQUIPMENT	EXCAVATOR	2008 Menzi Muck A91 Walking Excavator
332	VEHICLE	FLAT BED	2017 Dodge 5500 Crane Flatbed
333	EQUIPMENT	MIXER	Rex Dulvi-Mixer
335	TRAILER	CARGO	Space Coast Trailer
336	VEHICLE	CRANE	2000 Sterling L7500 Crane Truck
337	VEHICLE	VAC	2002 Sterling 7500 Vac Truck
338	VEHICLE	VAC	2005 Sterling LT9500 Sewer Cleaning Vac Truck
339	TRAILER	COMPRESSOR	Compressor w/ Trailer
341	EQUIPMENT	PUMP	Thompson 6' Bypass Pump -Trailer
342	EQUIPMENT	PUMP	Thompson 12' Wellpoint Pump (dewater)
343	EQUIPMENT	PUMP	Thompson 12" Well point Pump (dewater)
344	EQUIPMENT	PUMP	Thompson 4" Mounted Pump-Trailer
346	EQUIPMENT	PUMP	Thompson 6" Bypass Pump
347	TRAILER	PUMP	Thompson 6' Trailer Mounted PUMP
348	EQUIPMENT	PUMP	Thompson 6' Bypass Pump
349	EQUIPMENT	PUMP	Thompson 6' Bypass Pump
350	EQUIPMENT	PUMP	Thompson 6' Bypass Pump
351	EQUIPMENT	PUMP	Thompson 6" Bypass Pump
352	EQUIPMENT	PUMP	Thompson 6' Bypass Pump
353	EQUIPMENT	PUMP	Thompson 6' Bypass Pump
354	EQUIPMENT	PUMP	Thompson 6' Bypass Pump
355	EQUIPMENT	PUMP	Thompson 6" Bypass Pump
356	EQUIPMENT	PUMP	Thompson 6' Bypass Pump
357	TRAILER	HAULER	Torino Tilt Trailer
375	VEHICLE	PICKUP	2017 GMC Sierra 1500 Pickup Truck
377	VEHICLE	PICKUP	2017 Chevy Silverado 2500 Truck
379	VEHICLE	BUCKET	2005 GMC C4500 Truck
380	VEHICLE	TANDEM	2007 International 8600 Truck
382	TRAILER	LOW BOY	2017 Eager Beaver 26' 50 GSL/3 Low Boy
383	VEHICLE	VAC	2018 Freightliner 2115-18PD Vac Truck
384	EQUIPMENT	EXCAVATOR	2017 John Deere 35G Compact Excavator
385	TRAILER	REEFER	2011 Utility Reefer Trailer 53'
388	EQUIPMENT	EXCAVATOR	2017 Komatsu PC78US-10 Hydraulic Excavator
395	EQUIPMENT	GENERATOR	80KW Generator
397	EQUIPMENT	GENERATOR	25KW Generator
398	EQUIPMENT	EXCAVATOR	2004 Daewoo SL420LC-V Excavator
400	EQUIPMENT	EXCAVATOR	2001 Komatsu PC138USLC2 Hydraulic Excavator

404	TRAILER	DUMP	Big Tex Dump Trailer
405	EQUIPMENT	LOADER	Cat 928G Wheel Loader
406	EQUIPMENT	PUMP	2013 Thompson Skid mount Elec Bypass Pump
407	EQUIPMENT	LIFT	Scissor Lift
408	EQUIPMENT	PUMP	Holland Hydraulic Pump (power pack)
409	TRAILER	CARGO	2018 Forest River 7' x 16'
412	TRAILER	TANKER	2003 Heil 9000 Gallon Tanker
413	EQUIPMENT	PUMP	8" Thompson 8V-55 Pump (Dewater/Trash)
414	EQUIPMENT	PUMP	Gorman X504-001 Pump.
416	EQUIPMENT	PUMP	Holland Pump(power pack)
417	EQUIPMENT	COMPACTOR	Atlas Copco Asphalt
418	EQUIPMENT	COMPACTOR	2016 Wackier Neuson Plate compactor
419	TRAILER	CARGO	2017 Freedom Trailer 14' x 7'
420	EQUIPMENT	PUMP	Thompson W-357 Dewater
421	TRAILER	CARGO	2018 Forest River Trailer
422	TRAILER	CARGO	Forest River Trailer Cargo
423	EQUIPMENT	PUMP	Thompson 6" Bypass Pump
428	VEHICLE	PICKUP	2018 GMC Sierra 1500 pickup
429	EQUIPMENT	COMPRESSOR	1999 Ingersoll Rand P185 WIR 185 CFM Air compressor
430	EQUIPMENT	COMPACTOR	2018 Wackier Neuson BPU4045 Compactor
431	EQUIPMENT	PUMP	Thompson 6' Bypass pump
432	EQUIPMENT	PUMP	Thompson 6"Bypass pump
433	EQUIPMENT	PUMP	Thompson 6' Bypass Pump
434	EQUIPMENT	PUMP	Thompson 6" Bypass Pump
435	VEHICLE	VAN	2011 GMC Savana 3500
436	TRAILER	HAULER	2003 Crosley CR81 x 17 3 tonTrailer
438	TRAILER	PUMP	2008 Holland H12TP5370 pump(power pack)
445	VEHICLE	PICKUP	2015 Ford F350 Pickup
446	TRAILER	CARGO	2019 Pace cargo
447	TRAILER	CARGO	2018 Forest River 20' cargo
448	EQUIPMENT	LOADER	2007 Caterpillar 950H Loader
453	TRAILER	PUMP	Electric Bypass Pump
454	EQUIPMENT	MAN LIFT	2006 Genie Z3422 Man lift
455	EQUIPMENT	MAN LIFT	2007 JLG 460SJ Man Lift
457	EQUIPMENT	COMPACTOR	2018 Wackier Neuson BPU4045 compactor
458	EQUIPMENT	COMPACTOR	2018 Wackier Neuson BPU4045 compactor

460	TRAILER	CARGO	Trailer Pace 7x16
461	VEHICLE	PICKUP	2004 GMC Sierra 1500
462	VEHICLE	PICKUP	2008 Ford F-250
463	VEHICLE	PICKUP	2009 Ford F-250
465	VEHICLE	CRANE	2004 GMC C4500
466	VEHICLE	VAC	2005 International Vac Truck
467	EQUIPMENT	MIXER	Concrete Mixer CM9
468	EQUIPMENT	EXCAVATOR	2018 John Deere 35G excavator
469	EQUIPMENT	SKID STEER	2018 Caterpillar 289D skid steer
471	EQUIPMENT	EXCAVATOR	2018 Caterpillar 308E2CRSB excavator
472	EQUIPMENT	EXCAVATOR	2018 Caterpillar 308E2CRSB excavator
473	EQUIPMENT	SKID STEER	2018 Caterpillar 262D skid steer
475	VEHICLE	REEFER	2018 Kenworth T370 refrigerated truck
476	TRAILER	HAULER	2006 Imperial CR825 Trailer
477	TRAILER	HAULER	2006 Anderson T35180 Trailer
480	EQUIPMENT	OFF ROAD CART	2014 Club Cart Carryall Off Road Cart
481	EQUIPMENT	COMPACTOR	Wackier Neuson BPU4045 Compactor
484	EQUIPMENT	EXCAVATOR	2015 John Deere 17G Excavator
485	EQUIPMENT	EXCAVATOR	2018 Caterpillar 303ECR Excavator
486	VEHICLE	CRANE	2009 Ford F-350
488	VEHICLE	CRANE	2011 Ford F-550
489	EQUIPMENT	EXCAVATOR	2017 Caterpillar 303.5E2CR
491	EQUIPMENT	EXCAVATOR	Caterpillar 315F Excavator
493	VEHICLE	FLAT BED	2018 CHEVY Silverado 3500 FLAT BED
494	VEHICLE	FLAT BED	2018 CHEVY Silverado 3500 FLAT BED
495	VEHICLE	FLAT BED	2018 CHEVY Silverado 3500 FLAT BED
496	VEHICLE	FLAT BED	2018 Chevy Silverado 3500
497	EQUIPMENT	COMPACTOR	Wackier Neuson BPU4045
498	EQUIPMENT	COMPACTOR	Wackier Neuson BPU4045
499	EQUIPMENT	ROLLER	Caterpillar CS34 Roller
500	EQUIPMENT	ROLLER	Caterpillar CS54B
501	VEHICLE	BOILER	2019 Kenworth T370 Steam Truck
503	TRAILER	CARGO	2019 Spartan SP7 x 16TA Cargo Trailer
504	TRAILER	CARGO	2019 Spartan SP8.5 x 16TA Cargo Trailer
505	TRAILER	CARGO	2019 Spartan JU7 X 16TE2 Cargo Trailer
506	EQUIPMENT	EXCAVATOR	2018 Caterpillar 305_5E2CR Excavator
507	EQUIPMENT	LOADER	2018 Caterpillar 908M Loader

508	TRAILER	DUMP	2018 U DUMP 83" X 14' X 48" TRAILER
509	TRAILER	DUMP	2018 U DUMP 83" X 14' X 48" TRAILER
512	EQUIPMENT	SKID STEER	2019 Caterpillar 279D Skid Steer
513	EQUIPMENT	PUMP	2019 Thompson D-DHS-EOV-1B30X2 diaphragm pump
514	TRAILER	PUMP	2019 Thompson 6V-DJDST-45T-M PUMP
515	VEHICLE	VAN	2007 Chevy Uplander van
517	TRAILER	GENERATOR	2002 Coleman 25KW Generator
518	TRAILER	MIXER	Mixer 32007033
519	EQUIPMENT	LOADER	2006 Kubota R520S Wheel Loader
520	EQUIPMENT	PUMP	Thompson 6' Bypass Pump
521	EQUIPMENT	PUMP	Thompson 6' Bypass Pump
522	EQUIPMENT	PUMP	Thompson 12R-DJDS_45T-XC Pump
523	EQUIPMENT	PUMP	Thompson 6" Bypass Pump
524	EQUIPMENT	PUMP	Thompson 6' Bypass Pump
525	VEHICLE	TV TRUCK	2008 Ford E 450 TV Truck
526	TRAILER	CARGO	2019 Forest River 6' x 12' Cargo Trailer
527	VEHICLE	FLAT BED	2016 Ford F550 Flat bed
531	EQUIPMENT	LIGHT TOWER	Light Tower
532	EQUIPMENT	COMPACTOR	Wacker Neuson BPU4045A COMPACTOR
534	EQUIPMENT	ROLLER	Leeboy roller MODEL 400
536	EQUIPMENT	PUMP	6" Well point pump (Dewater)
537	VEHICLE	TRUCK	2019 Chevrolet Silverado 2500 4WD LTZ Crew Cab
538	TRAILER	CARGO	Forest River Trailer
539	VEHICLE	VAN	2014 Dodge Caravan
541	VEHICLE	VAN	2011 GMC Savana 2500 VAN
542	VEHICLE	VAN	2007 CHEVY VAN
543	VEHICLE	REEFER	2011 Kenworth T370
544	VEHICLE	TV TRUCK	2014 Chevrolet Van CCTV
545	EQUIPMENT	LIGHTING	2011 Terex RL4000 Light Tower
546	TRAILER	HAULER	Carry-On Trailer
547	VEHICLE	PICKUP	2014 Ford F250
549	VEHICLE	FLAT BED	2018 GMC Sierra
550	VEHICLE	VAC	1999 Sterling Vac truck LT 9501
551	EQUIPMENT	COMPACTOR	Wacker Neuson Compactor
552	EQUIPMENT	COMPACTOR	Wacker Neuson Compactor
553	EQUIPMENT	PUMP	Cornell Water Pump 12"
554	EQUIPMENT	ROLLER	2012 Multquip Double roller

560	TRAILER	REEFER	2007 Utility Reefer 28" Reefer
562	VEHICLE	UTILITY	Ford F350 1 Ton Utility Truck
563	TRAILER	HAULER	2007 Rayside trailer, 6 Ton Load Cap
566	EQUIPMENT	AIR COMPRESSOR	Atlas Copco XATS375T3 Air Compressor
567	EQUIPMENT	PUMP	14 BBA PT90 PUMP BLUE
568	EQUIPMENT	PUMP	17 BBA PT90 PUMP BLUE
569	EQUIPMENT	PUMP	13 BBA PT90 PUMP BLUE
571	VEHICLE	VAN	2019 FLT Sprinter 3500 170 EXT Van
572	VEHICLE	TRUCK	2017 Ford F450 Super Duty
573	EQUIPMENT	COMPACTOR	Wacker Nueson Vibroplate
574	VEHICLE	BOILER	2005 Kenworth T80 Boiler
575	EQUIPMENT	PUMP	06 OTHE Pump Blue (Dewater)
576	EQUIPMENT	COMPACTOR	BPU4045 Compactor
577	EQUIPMENT	COMPACTOR	Wacker Neuson Vibroplate
579	TRAILER	JETTER	Pipehunter 7834 sewer cleaner, trailer mounted
580	TRAILER	HAULER	2008 Interstate Trailer
581	TRAILER	HAULER	2007 Hudson HTD18D Trailer
582	TRAILER	HAULER	2007 Hudson HSE18 Trailer
583	VEHICLE	PICKUP	2008 Ford F250 pickup
587	EQUIPMENT	PUMP	PDT3A PUMP ,DIAPHRAGM
588	EQUIPMENT	PUMP	PDT3A PUMP ,DIAPHRAGM
589	EQUIPMENT	PUMP	PDT3A PUMP ,DIAPHRAGM
590	EQUIPMENT	PUMP	PDT3A PUMP ,DIAPHRAGM
591	EQUIPMENT	PUMP	PDT3A PUMP ,DIAPHRAGM
592	EQUIPMENT	EASEMENT MACHINE	Sewer Equipment (Jetter Machine)
593	TRAILER	PUMP	Pump Trailer
594	EQUIPMENT	SKID STEER	2016 Bob Cat T750 Skid Steer
597	TRAILER	CARGO	2020 FOREST RIVER TRAILER
598	EQUIPMENT	COMPACTOR	Wacker Neuson Compactor
599	EQUIPMENT	PUMP	4" Diaphragm Pump
600	EQUIPMENT	COMPACTOR	Wacker Neuson Compactor
602	TRAILER	CARGO	Forest River Trailer Cargo
604	TRAILER	CARGO	2021 Forest River Cargo 7x14
607	EQUIPMENT	EXCAVATOR	Doosan DX50
608	EQUIPMENT	EXCAVATOR	Doosan DX140 LCR - 5
610	EQUIPMENT	SKID STEER	2010 Bobcat A300 Skid Steer Loader
612	EQUIPMENT	PUMP	Thompson Pump 8" Electric Pump Intake , Discharge

613	EQUIPMENT	PUMP	Thompson Pump 12" (Dewater Pump)
614	EQUIPMENT	ATTACHMENT	60" MAYA Broom
615	VEHICLE	TV TRUCK	2017 Ford CCTV Truck
617	EQUIPMENT	COMPRESSOR	2014 Kaeser M250 Mobile Air Compressor
619	EQUIPMENT	PUMP	Thompson Pump 8" Bypass Pump
620	VEHICLE	UTILITY	2009 Ford F450 Utility Truck
622	VEHICLE	VAC	2008 INTERNATIONAL 7400 (AQUATEC)SEWER CLEANER/VACUUM TRUCK
623	EQUIPMENT	SKID STEER	2009 BOBCAT A300 SKID STEER LOADERS
625	EQUIPMENT	SKID STEER	2011 BOBCAT A770 SKID STEER LOADERS
626	EQUIPMENT	SKID STEER	2011 BOBCAT A770 SKID STEER LOADERS
627	EQUIPMENT	LOADER	2008 CASE 621E LOADER
628	EQUIPMENT	ATTACHMENT	Bobcat Broom Attachment
629	VEHICLE	TRUCK	2011 Ford F450 Utility Truck
630	EQUIPMENT	ATTACHMENT	72" Maya Pick up Broom Attachment
631	VEHICLE	REEFER	2020 Kenworth T880 Cab & Chassis (Global M)
632	VEHICLE	VAN	2009 Dodge Grand Caravana Cargo Mini Van
633	VEHICLE	DUMP	2007 Ford F450 Dump Truck
635	TRAILER	HAULER	2011 FELLING FT2T2 TRAILER
636	TRAILER	HAULER	2011 FELLING FT12L TRAILER
637	EQUIPMENT	PUMP	2009 THOMPSON 6TSV447 TRAILER MOUNTED TRASH PUMP
638	TRAILER	SEWER CLEANER	2009 PIPEHUNTER 7834 TRAILER MOUNTED SEWER CLEANER
639	TRAILER	SEWER CLEANER	2009 PIPEHUNTER 7834 TRAILER MOUNTED SEWER CLEANER
641	EQUIPMENT	ROLLER	2010 BOMAG BW90AD2 VIBRATORY ROLLER
644	EQUIPMENT	CONTROL PANEL	Control Panel
645	EQUIPMENT	ATTACHMENT	Broom Attachment Bobcat
646	VEHICLE	BOILER	2021 Kenworth Boiler
648	VEHICLE	DUMP	2011 International 7400 Water Truck
650	VEHICLE	BOX	2020 Chevrolet Silverado Medium Truck
655	TRAILER	PRES. CLEANER	2014 K-Bar 157597 Trailer MTD Pressure Cleaner
657	EQUIPMENT	LOADER	Wheel Loader Kubota R640R41
658	VEHICLE	REEFER	2018 IZUZU NPR REEFER
659	VEHICLE	PICKUP	2022 Chevrolet Silverado
660	VEHICLE	FLAT BED	2022 Chevrolet Silverado Medium Duty
661	VEHICLE	FLAT BED	2022 Chevy Silverado CK31043
663	VEHICLE	DUMP	2020 Kenworth T800 Dump Truck (WHITE)
664	VEHICLE	DUMP	2018 KENWORTH T880 DUMP TRUCK (BLUE)
667	EQUIPMENT	LOADER	Komatsu W320-8 Wheel Loader

668	EQUIPMENT	EXCAVATOR	2023 Doosan DX35Z Mini Exc
669	EQUIPMENT	LOADER	Komatsu WA320-8 Wheel Loader
673	EQUIPMENT	COMPACTOR	2023 Plate Compactor Weber Mf
674	EQUIPMENT	EXCAVATOR	Komatsu PC138USLC-11 Hydraulic Excavator
676	EQUIPMENT	COMPACTOR	2023 Plate Compactor Rev 9000-10000 Lb
680	EQUIPMENT	PUMP	12" Rotary WellPoint Pump
682	EQUIPMENT	SWEEPER	2018 Superior Broom Sweeper
683	EQUIPMENT	PUMP	2011 Tradewinds Pump TKP06-4750 6"
685	VEHICLE	PICKUP	2024 Chevrolet Silverado 2500HD
686	EQUIPMENT	WORKMAN	Workman (Toro)
687	VEHICLE	PICKUP	2024 Chevrolet Silverado 2500HD
689	EQUIPMENT	AIR COMPRESSOR	2014 Kaeser Compressor
690	VEHICLE	PICKUP	2024 Chevrolet Silverado 2500HD
691	VEHICLE	PICKUP	2024 Chevrolet Silverado 2500HD

HINTERLAND GROUP, LLC

Completed Jobs/Projects

JOB NAME & LOCATION	DOLLAR AMOUNT OF WORK PERFORMED	YEAR COMPLETED
CD01 WM Imp. Zone 2-3 & 4	1,013,382	2021
PBC-Sandpiper & Meadowlark WM	1,641,178	2021
LS Nos. 114-123-125-132-148	2,372,477	2021
TO#15-FTL Hector Park Storm	527,020	2021
CWPB-LS#5 Emergency Tankering	732,765	2021
Lift Stations 5-7-10	988,967	2021
E4S32-R1 - NPDES MARTIN CIPP	315,928	2021
Charlotte - 24 CIPP	309,326	2021
Charlotte-Rio De Jan 72in CIPP	471,220	2021
Sanitary Sewer - Mulberry	2,077,611	2021
Largo-Lift Station 2 SS CIPP	360,844	2021
E5U98 - FDOT Drainage Repair	295,701	2021
Orange-EWRF In-Plant PS Repl	1,323,642	2021
PBC-SS Collection Rehab CIPP	2,608,599	2021
ECUA-Pensacola-WO# CIPP-2020-3	570,559	2021
Palm Bay- Culvert Pipe Unit 32	662,107	2021
FTL-Replacement of PS D-38	526,834	2021
Mangonia-Inst Sanitary Sewer M	345,130	2021
SUA-PGA WWTP Pond Bypass	938,647	2021
Palm Bay- Culvert Pipe 23 & 56	540,699	2021
Zephyrhills- Lining 2020 CIPP	403,956	2021
Titusville-PO 016222- CIPP	628,416	2021
Martin-Indian River Dr WM&FM	1,131,061	2021
Palm Bay- Culvert C-39 & C-41R	680,648	2021
Tequesta-SW Pipe Lining CIPP	257,195	2021
Satellite Beach- Park Ave	843,907	2021
Brevard-LS T-36 & T-69 Rehab	278,000	2021
PBC WUD Lift Station 4101	755,036	2022
PBC-Aerial Canal Crossing P2	1,560,938	2022
FTL-Rio Vista Restore & WM	2,171,573	2022
PBC-WO#110 Seacrest	255,530	2022
Century Village and Westgate	2,530,945	2022
Polk County Storm Lining -CIPP	569,950	2022
LS Project A Bid Package 2	4,677,501	2022
Sykes Creek Regional WWTF	979,964	2022
Largo- LS No. 2 Rehab CIPP	479,505	2022
Envirowaste MIA CIPP-P0215-01	531,150	2022
ECUA-Pensacola- 2020-4 CIPP	481,716	2022
ECUA-Pensacola-A5 Phase 2 CCTV	277,734	2022
ECUA-CIPP SS Rehab	453,642	2022
IRC-LS 7,24,2147,2148 & 2149	290,995	2022

Wellington-Forcemain Replace	313,450	2022
Altamonte Springs-LS #31	259,050	2022
Delray-Sys 58A & 87 FM Replace	1,248,389	2022
CWPB- 31st-35th Lateral CIPP	655,200	2022
Melbourne-Cliff Creek Storm	737,612	2022
Zephyrhills- LS 03 06 CIPP	304,409	2022
CC-LS Reh103,113,116,118 & 119	586,520	2022
Hallandale-LS 8 Replacement	1,712,103	2022
Polk- Storm Sewer CIPP	375,493	2022
PBC- LS Rehab Priority 1	798,185	2022
GML-Englewood BH Phase 2 CIPP	265,922	2022
Hallandale- Raw Water Well 9	570,941	2022
SUA-Cabana Colony 4in WM Repl	751,315	2022
Charlotte-Lemon Bay CIPP	479,641	2022
Charlotte-2405 Harbor Blvd Ph1	320,986	2022
SUA-PGA WWTP Scum Pump Rpl	618,400	2022
Clearwater-2021 StormwaterCIPP	308,008	2022
Manatee-Storm Issuance 1 CIPP	466,751	2022
Lake Clarke Shores-Lawrence Rd	690,049	2022
TRC-PGA Village- WO#9 CIPP	362,681	2022
SUA-Juno Rd ForceMain Addition	471,022	2022
West Melbourne - Meadowlane Av	695,272	2022
PBC-Seacrest & Woolbright	41,854	2023
Nickel Blvd storm drain repair	564,975	2023
Boca Raton CIPP Project	51,634	2023
Structure and Grate Order Only	15,863	2023
PBC - Brandywine Dr/ Raintree	130,929	2023
Riviera Beach Dig Job	14,675	2023
Lake Park CIPP Prosperity Farm	69,480	2023
Boynton Beach CIPP Windsor/Jog	59,052	2023
PBC - 6915 Paul Mar Dr	87,173	2023
PBC - 6794 Paul Mar	102,303	2023
Lift Stations Rehab - Proj B	4,471,832	2023
PBC-SE 2nd Str Point Repairs	36,100	2023
PBC-BelleGlade SW Ave B Place	36,600	2023
PBC-BelleGlade RV Park Gate	20,200	2023
PBC - Jarvis Belle Glade	60,400	2023
Belle Glade - Acid Valve	33,948	2023
PBC - LS 5015 Bypass Line	288,993	2023
FM Repair SW 18th St/Powerline	121,426	2023
PBC Wildflower MH Repair/CIPP	57,100	2023
PBC Emergency Old Crestwood FM	66,791	2023
Martin- Witham Field CIPP	71,282	2023
PBC-Gravity Main & MH Reh CIPP	1,050,468	2023
PBC- WA#2- Gravity Main CIPP	1,632,830	2023
LRD - LS 266 Bears Club	19,383	2023

LRD LS #233 Rehab	145,678	2023
LRD LS #64 Rehab	116,938	2023
LRD LS #131 Rehab Juno Beach	96,247	2023
LRD LS#211 Rehab Pompano St	132,152	2023
LRD LS#210 Rehab Mullin St	127,364	2023
LRD - LS 108 site work	14,711	2023
Orange - Gravity System CIPP	1,955,925	2023
Storm Sewer River Ridge - CIPP	39,285	2023
Weston - 1055 Cedar Falls Dr	2,646	2023
Weston Emergency 1021 Laguna	2,880	2023
Indian River MH Rehab	31,871	2023
IRC Windsor LS	136,512	2023
Cooper City LS#15	81,267	2023
Cooper City LS #56	109,158	2023
Lee Co Island Ave & Sapodilla	68,493	2023
Sarasota 4th Qtr In-Kind	40,696	2023
Sarasota Ridgewood Estates 6&7	72,637	2023
Sarasota Ridgewood Estates 10	61,441	2023
Sarasota Ridgewood Estates 11	59,998	2023
Sarasota Ridgewood Estates 12	63,717	2023
Sarasota Ridgewood Estates 13	61,828	2023
Sarasota Ridgewood Esates 14	58,175	2023
Sarasota Ridgewood 16, 18, &19	41,062	2023
Sarasota Ridgewood Estates 17	65,905	2023
Titusville-WO#2 Storm CIPP	260,009	2023
FTL-Pump Station A-7 Upgrade	1,810,005	2023
Delray- LS #23 Rehab	61,435	2023
Delray LS #11 repair	103,550	2023
Delray 103 Andrews Emergency	56,332	2023
Delray Manhole #89 634 Lindell	11,947	2023
Delray SE 3rd Avenue manhole	9,141	2023
Delray LS #26C Rehab	93,222	2023
Delray 814 E Atlantic Avenue	14,485	2023
Delray Sludge Removel at WTP	23,000	2023
Lantana-Storm, Sewer &Lat CIPP	490,587	2023
Lantana Dixe & Pine Emerg Vac	11,300	2023
Lantana 515 Pine St Emergency	33,080	2023
Lantana 302 S Lake Dr Emerg	16,900	2023
Lantana-615 North 4th St Emerg	7,938	2023
Lantana Emerg Vac Services	7,150	2023
Lantana Emerg Vac Service	8,725	2023
Lantana Pine & Dixie Emerg Vac	9,725	2023
Highland Beach A1A Emergency	24,800	2023
Highland - FM Emg 4300 S Ocean	12,430	2023
Highland - 4001 S Ocean Emerg	12,744	2023

Highland CCTV Laterals	9,200	2023
Lands End-Boca Raton CIPP	6,500	2023
CWPB-Nottingham Blvd & Miller	2,779,583	2023
Polk- Various Locations CIPP	192,882	2023
Polk 9 locations storm lining	65,639	2023
PBC- Lox Groves LS Install	238,383	2023
PBC- LS Pressure Nodes	493,170	2023
PBC - Torry Island FM	175,950	2023
PBC Finfrock FM	503,352	2023
IRC Sewer Lateral Repair	30,099	2023
10th Ave N and K St Lake Worth	81,203	2023
Tequesta CIPP 2021	571,356	2023
Tequesta - 204 River Dr CIPP	124,557	2023
Charlotte-2405 Harbor Blvd Ph2	242,600	2023
Charlotte-129 Palmetto Cir CIP	16,768	2023
Charlotte Cape Horn CIPP	161,120	2023
Charlotte - Vellum Cir CIPP	136,100	2023
Charlotte 2369 Cedarwood CIPP	28,573	2023
Charlotte 144 Cabana Way CIPP	33,704	2023
Charlotte Lakeview Park Pipe L	162,821	2023
Hallandale- WO#1 Storm CIPP	173,185	2023
Titusville-Carpenter W Main Ex	469,645	2023
Wellington-WO#03 CIPP	205,780	2023
Wellington Block Island CIPP	298,594	2023
FPUA Jefferson Pkwy	227,295	2023
FPUA - FPUA U Vista Court	94,306	2023
FPUA - Academy Drive	30,018	2023
LRD-A1A 16in Arial Repairs	15,420	2023
LS #266 Driveway Replacement	11,728	2023
LRD- Maltz Theatre Valve	26,025	2023
LRD - Antigua IQPOC	58,170	2023
LRD- 4242 County Line Driveway	9,099	2023
5 St and S Orange Point Repair	24,825	2023
LRD Lox River Rd IQ Main Emerg	49,750	2023
LRD - Bank United Point Repair	107,489	2023
LRD - 5th and Orange Punchlist	10,207	2023
LRD - 55 Hickory Hill M&P	10,722	2023
LRD - 117 Pine Hill M&P	12,028	2023
LRD 207-211 Country Club Drive	49,259	2023
LRD 18 Pine Hill Trl LS54-MH15	27,318	2023
LRD LS 108 Turf Block Driveway	25,012	2023
PBG-Bamboo Dr CCTV	91,895	2023
PBG Russo Park Project	13,700	2023
PBG Valencia Gardens Emerg Vac	37,525	2023
Wellington-WW LS 10,48,76&79	1,396,867	2023

LRD-181 St Gravity Sewer Sys	207,512	2023
Martin-Gomez Restoration	1,923,250	2023
Lauderhill Raquet Club	34,254	2023
Lauderhill 56 Ave CleanInspect	17,940	2023
Lauderhill Unscheduld Vac Serv	9,520	2023
Bayshore at the Lake Bldg H	85,405	2023
Manatee Leisure Lakes	131,980	2023
Manatee - 100 Braden Run	40,800	2023
Manatee 32nd Avenue W	31,680	2023
Manatee - 52nd Ave Terr E	97,420	2023
Manatee 4804 89th St W	23,089	2023
Manatee 4506 17th Street W	27,500	2023
Manatee - DeSoto Mall@9th St W	191,730	2023
Manatee - 6111 Misty Oaks Insp	443,505	2023
Manatee Palm View Rd	43,300	2023
Manatee - 5425 39th St E	122,218	2023
Manatee NB2076 Wauchula Rd	96,326	2023
Manatee 4624 26th Ave W	57,000	2023
Manatee Lockwood Ridge Rd	78,640	2023
Manatee NB3023 Old Tampa Road	124,687	2023
Riviera Beach LS#37 Rehab	108,747	2023
Miramar LS#16 Rehab	63,585	2023
Bay-Panama City-Storm CIPP	314,833	2023
Bay-Storm CIPP Road Rehab Ph 1	279,712	2023
Martin - Grout Injection	57,430	2023
Martin Co Salerno Rd CIPP Proj	169,450	2023
Martin Co - 84 Sewalls Pt	16,653	2023
Lake Park- Crescent Dr Alleywy	14,570	2023
Lake Park- Joule Rd Storm	105,187	2023
JUP-SMRU Jamestown LS Replace	372,792	2023
D. Staley Culvert pipe lining	29,500	2023
Clewiston - E Ventura Ave Impr	1,306,637	2023
Dania Beach LS #14	26,760	2023
Tequesta Disposal relocate	225,900	2023
Palm Springs-Gulfstream Rd SI	709,747	2023
Lake Clarke Lawrence Woods lat	28,250	2023
LCS 3889 Tuskeegee Emerg Vac	4,025	2023
Grasslands HOA Bellerive CIPP	133,686	2023
LRD Replace Disconnect LS241	1,359	2023
LRD Panel Replacement ABS 15	1,466	2023
LRD Replace Panel ABS 17	1,045	2023
LRD Panel Replacement ABS 08	1,590	2023
LRD Panel Replacement ABS 16	1,441	2023
LRD Panel Replacement ABS 20	1,459	2023
LRD Panel Box/Breakers ABS 07	1,568	2023

LRD Panel Replacement ABS 12	1,473	2023
LRD Panel Replacement ABS 36	1,466	2023
LRD Panel Replacement IQ504	1,657	2023
LRD Replace Disconnect	1,258	2023
LRD Panel Replacement IQ505	1,652	2023
LRD - LS 164 Meter Can	1,830	2023
LRD LS39 Svc Meter/Disconnect	17,549	2023
Stuart MH Rehab	38,810	2023
Stuart MH rehab	41,800	2023
Stuart MH Rehab	7,580	2023
Finfrock B Glade LS Electrical	55,726	2023
CWPB - Floral Ave WO #3	18,529	2023
CWPB WO4 documents 48th Street	287,580	2023
CWPB amarind Ave Phs 1 Clean	14,995	2023
WPB MH Rehab 36th & Australian	145,101	2023
Lake Clarke-Emrg CCTV Seminole	7,600	2023
Comak - 36th St CCTV Inspect	143,556	2023
Ft Lauderdale FM Emergency	33,350	2023
FPUA Roselyn Emerg MH	8,435	2023
Kennedy Jacaranda CIPP	70,750	2023
194 Gulf View - Mendoza	68,486	2023
Palm Bay LS #2 Rehab	155,406	2023
Charlotte 15411 Appleton	46,281	2023
Englewood CB repair project	125,450	2023
Charlotte 261 Mariner project	38,780	2023
Charlotte FEMA Inspections	211,730	2023
Charlotte 107 Free Ct Project	27,946	2023
4107 Rock Creek, Charlotte	118,235	2023
Charlotte Meadow Lark Lane	39,460	2023
Charlotte 23306 Duchess	22,815	2023
Charlotte 348 Paramaribo St	43,850	2023
Charlotte - 25168 Recife Dr	35,692	2023
Charlotte - 25135 Obelisk Ct	32,755	2023
Charlotte 2518 Mauritania Rd	43,395	2023
Charlotte 20105 Mt Prospect	42,065	2023
Charlotte 101 Colonial St	67,605	2023
Charlotte 4242 Rose Arbor Cir	12,260	2023
Charlotte - 22316 Hallstead	27,732	2023
Charlotte - 145 Parade Circle	312,168	2023
Charlotte 62 Sportsman Lane	59,340	2023
Charlotte 25 Annapolis Lane	32,365	2023
Charlotte 124 Apollo Drive	34,630	2023
Charlotte 219 Antilla	143,296	2023
Charlotte 25506 Rampart Blvd	51,885	2023
CLT Harbor Peachland Crossing	36,502	2023

Charlotte 1201 Gasparilla Ave	85,348	2023
PSL Longhorn St Project	166,131	2023
LRD MH Rehab 1	30,430	2023
LRD - MH Rehab Round 2	18,070	2023
Hotwire Chase St Sewer Inspect	19,555	2023
Lantana Garnett St WM Emerg	74,345	2023
Harbor Point HOA Pipe Repair	4,650	2023
CWPB Reinstate Sewer Services	2,000	2023
PBC 6516 Paul Mar Dr	60,527	2023
PBC Burma Road top slab	7,376	2023
2911 Radnor Court	102,324	2023
Lantana & E Haverhill drainage	24,597	2023
PBC Brandywine and Raintree	49,895	2023
Prosperity FarmsAllamanda Emer	14,238	2023
PBC 1588 Bowood Rd	34,871	2023
PBC Avery Road outfall	24,705	2023
PBC Allamanda& Prosperity CIPP	131,493	2023
Investment Lane	66,499	2023
PBC 644 Snead Drainage Replace	108,575	2023
PBC WTP 3 Emergency #2	119,380	2023
PBC Flavor Pict Rd Emergency	51,809	2023
Canal Point HDD WM Replacement	98,028	2023
PBIA Storm Drain Steel Grate	21,570	2023
Cooper City Mastec Hatch	12,790	2023
Atlas-Manatee Heather Hills	850,996	2023
Wellington Pierside Emerg CIPP	25,380	2023
Stuart, Trailside HOA	21,000	2023
PBC - North Metering Station	46,000	2023
Lee Cty St James Storm CIPP	146,949	2023
Laurel Oaks 72" Storm Rehab	119,700	2023
Loxahatchee Landing 24" CIPP	39,900	2023
BP Gas Station LS	7,200	2023
Rapid Milling CCTV/Cleaning	3,450	2023
PBC - 6852 Tradewind Way	62,693	2024
CWPB Lift Station 73 Rehab	9,709	2024
PBC - WA#3 Gravity Main CIPP	2,781,804	2024
LRD - LS 242 Re-pipe	24,113	2024
River Ridge HOA Storm Project	29,400	2024
RiverRidgeHOA-Lakeside Outfall	11,500	2024
IRC-WTP LS Rehab	50,665	2024
IRC LS 2287 Rehab	68,958	2024
IRC LS #153 Rehab (Bay Tree)	110,489	2024
Cooper Cty LS #3 Rehab	163,210	2024
PBG - 4125 Lilac Street	12,600	2024
Delray LS #86A Full Rehab	99,968	2024

Delray LS 23 Emergency Repair	29,793	2024
Delray 634 Lindell MH 89	147,268	2024
Delray LS 57B Rehab	21,121	2024
Delray LS 106 Rehab	37,379	2024
Delray LS 93A Rehab	106,610	2024
LS #23 FM Emergency 2	160,180	2024
Delray Atlantic & Bronson Emrg	78,464	2024
Delray LS 10A Emergency Risers	17,079	2024
Delray LS#51 Emergency	63,957	2024
Delray NW 17th Ave Pnt Repair	102,422	2024
Delray LS 92 Emergency	19,870	2024
Delray 238 SE 2nd St MH Rehab	12,401	2024
Delray LS 34 Emerg Bypass & MH	51,673	2024
Delray - LS 10 Emerg Pump Base	24,114	2024
VPS Springdale LS Rehab	39,416	2024
VPS - Congress Ave Emergency	109,006	2024
V. Palm Springs-Bridge Bracket	24,217	2024
Lantana 401 Gator Dr Emergency	28,150	2024
Lantana - Drew St WM Repair	87,804	2024
1116 Highland Bch Dr Lateral	14,435	2024
CWPB-LS 153 Improvements	732,830	2024
Tequesta-Emerg Repair 12in RDM	53,703	2024
Polk - Storm CIPP RFP #6	247,546	2024
Polk Storm 22 locations	862,169	2024
IRC Landfill Leachate Pipe	698,263	2024
Lakeside & 16th Ave Sewer, LWB	42,360	2024
Wellington Essex Neighborhood	497,077	2024
FPUA - Fleetwood Low Pressure	213,234	2024
FPUA - MH 2-10 Replacement	189,862	2024
FPUA - Kerr and Roylat	214,529	2024
FPUA - Greenacres FM Expansion	338,656	2024
FPUA Cortez Blvd MH	376,218	2024
FPUA Sam's Club MH Replacement	336,436	2024
FPUA - Boland 4" Pipe Install	7,360	2024
FPUA - San Lucie	518,117	2024
FPUA - Lake Mura	417,850	2024
FPUA Avenue B WM Extension	117,385	2024
FPUA 25th St Emerg FM Repair	10,420	2024
Polk - JPV Sewer Inspection	196,340	2024
Palm Bay-462 Breakwater CIPP	15,480	2024
LRD - RAS Valve 3	60,425	2024
LRD 18345 SE Birdie Ln	14,950	2024
PBG - Westport Drive	56,370	2024
PBG 3913 Begonia St Driveway	20,100	2024
PBG - Fairchild Gardens Ave	171,425	2024

PBG - Magnolia Avnue	68,055	2024
PBG - 4267 Heather Circle	28,820	2024
PBG - Elm & Bayberry	12,110	2024
PBG Lighthouse&Burns cleaning	64,760	2024
PBG - Alton Cleaning & CCTV	117,680	2024
PBG - Westwood Gardens	103,105	2024
PBG - Ops Bldg Washdown Area	10,100	2024
PBG - Milton Pump Rental	37,760	2024
MWI-Bethesda Hospital- Boynton	181,820	2024
Plantation Park East manholes	94,160	2024
Plantation Park MH Rehab #2	150,068	2024
Plantation Harbor MH Rehab	115,828	2024
Central Park Place MH Rehab	35,043	2024
Lauderhill Emerg Pump Services	16,320	2024
Lauderhill - 1261 NW 55 Ave	7,150	2024
Manatee Whitfield Industrial	109,657	2024
Manatee - 5216 Commonwealth	17,810	2024
Manatee 71st Ave E	30,040	2024
Manatee 8311 Sylvan Woods Dr	85,820	2024
Manatee 8210 Timberlake Lane	132,830	2024
Manatee 1304 83rd St NW	45,050	2024
Manatee Natalie Way	37,200	2024
Manatee 6222 12th St Ct E	63,700	2024
Manatee 704 64th Ave Terr W	27,530	2024
Manatee - Tournament Blvd	61,910	2024
Manatee - 7707 15th Ave NW	98,880	2024
Manatee - 7860 Palm Aire Lane	168,330	2024
Riviera Beach LS #20 Rehab	117,307	2024
Riviera Beach LS #43	125,260	2024
Riviera Beach PS #1A	499,047	2024
Riviera - LS #9 Rehab	143,145	2024
BRVD 1990 London Town Ln CIPP	16,170	2024
BRVD 1965 Adale Ct CIPP	15,064	2024
BRVD 1931 Malmsey Ct CIPP	18,720	2024
BVRD 1865 Flintshire Way CIPP	20,980	2024
PSL Rehab WP 26,42,47	71,720	2024
Bay Cty FY24 Resurface Pipe	136,596	2024
Martin-Dixie Hwy Lining	164,397	2024
Straticon America Walks LS	7,605	2024
Plantation Acres - PS 3 Rehab	404,507	2024
Nunno-McDonalds- Delray MH	14,023	2024
FEA- Clean TV MH Install CIPP	43,431	2024
South Bay - SW 10th Ave Imprv	1,799,195	2024
MWI - Hampton Inn Wellpoints	40,300	2024
Halfacre Tallevast Rd Rehab	2,487,028	2024

Titusville - Sisson Rd	29,665	2024
JL POA Hidden Cove Emerg Vac	3,060	2024
JL POA Capt Kirle/HOA 12	15,603	2024
JL POA Holes 2 & 8	17,880	2024
JL POA - The Narrows	19,080	2024
JL POA - Longshore	6,300	2024
JL Landing-Barrow Island&S.Cay	8,540	2024
FDOT-Volusia Cty SR A1A	1,697,332	2024
LCS 3905 Ocala Rd Emer Vac Ser	8,040	2024
LCS Seminole Area Vac Services	6,750	2024
LRD Strut/Rack Work IQ 500	2,106	2024
LRD Lighhouse service and gear	121,262	2024
LRD lighthouse power feeds	130,428	2024
LRD ABS 21 Breaker Panel	1,227	2024
LRD ABS06 Breaker Panel	1,951	2024
LRD ABS 27 Breaker Panel	1,789	2024
LRD LS 91 Meter Can Replace	2,232	2024
LRD LS 69 Meter Can Replace	2,153	2024
LRD - IQ 5823	2,324	2024
LRD - LS 76 Meter and Disc	7,077	2024
LRD - LS 66 Conduits	1,914	2024
LRD - LS 94 Disc	5,980	2024
LRD LS 236 Disconnect Replace	6,016	2024
LRD LS 68 Service Wire	16,302	2024
LRD IQ 504 XFMR and Tower	5,760	2024
CWPB 28th Street Project	130,943	2024
Town Jupiter Island Way Well	797,516	2024
Halfacre 43 St & Sandpoint	1,199,158	2024
Brevard - Lift Sta S-27 Rehab	450,962	2024
FPUA - Ave N Manhole	14,163	2024
Cape Canaveral- LS 5 Rehab	385,760	2024
Martin-SE Hideawy Pl Swr Rehab	234,195	2024
Charlotte 1419 Deer Creek Dr	90,860	2024
Charlotte 18358 Burkholder Cir	59,910	2024
Charlotte 27256 San Marino Dr	51,882	2024
CLT Price Circle	18,400	2024
CLT - 7 Bunker Lane	47,660	2024
CLT - 27 Marker Road	35,531	2024
CLT -n 141 Beeney Road	52,760	2024
CLT - 144 Cousley Drive	43,415	2024
CLT - 181 Mocoro St	70,625	2024
CLT - 240 Fairway Road	104,595	2024
CLT - 2391 Breman Ct	43,402	2024
CLT - 2707 Lakeshore Circle	51,368	2024
CLT - 11185 Waterford Rd	57,250	2024

CLT - 25126 Remus Ct	92,057	2024
CLT - 25220 Paraguay Street	37,245	2024
CLT - 27248 Punta Cabello Ct	61,230	2024
CLT - River Beach Rd	18,405	2024
Charlotte - 675 Corrientes	41,175	2024
Charlotte Gasparilla&El Sol Dr	24,135	2024
CLT - 25840 Aysen Drive	72,095	2024
CLT - 212 Marker Road	130,942	2024
CLT 162 Marker Road	99,823	2024
CLT 22312 Edgewater Dr	38,404	2024
Charlotte - 27217 Voyageur	34,310	2024
CLT Kings Hwy@Veterans Blvd	41,551	2024
CLT - 2 Medalist Road	101,495	2024
Clt - Rotunda E@Fiddler Green	62,340	2024
Charlotte - Rotunda North	286,475	2024
Charlotte - 26294 Ascuncion	36,410	2024
CLT-Gulf Blvd Clean & Inspect	94,950	2024
CLT - 126 Severin Inspect Only	11,680	2024
Charlotte - 23242 Altman	127,826	2024
Charlotte - 1444 Deer Creek	35,963	2024
Hallandale- LS #3 Improvements	171,983	2024
PSL - Morningside	113,180	2024
PSL - Various locations	188,983	2024
PSL SE Veterans Mem Pkwy	392,405	2024
PSL CIPP 14 locations	411,365	2024
PSL - Treasure Island	246,456	2024
PBC WA#1 Canal Point WM	127,278	2024
LRD - MH Rehab Round 3	19,842	2024
LRD MH Rehab Round 6	36,168	2024
W Melbourne-LS 110 & 114 Rehab	317,943	2024
PBC - Material Purchases	39,927	2024
PBC Donald Ross&Ellison Wilson	23,030	2024
PBC Foxwood Emergency	1,632,353	2024
Woodcrest and Upland CIPP	1,147,840	2024
PBC 7153 Catalina Drive	94,740	2024
PBC SW 22nd and Congress	105,912	2024
PBC Caroline Av & Snead 42CIPP	199,000	2024
Seminole Pratt Whit ARV Assess	62,214	2024
MBR - Village Art Plaza	24,910	2024
CWPB - Vacuum Tanker TV Srvcs	59,635	2024
Delray Emergency Sewer Inspect	74,923	2024
Riviera Emerg Storm 17 & Ave L	91,020	2024
Dania Bch Nautilus Isle Clean	9,175	2024
Dania Beach-Hurric Milton Emer	119,100	2024
OUA 24th St Asbestos Removal	255,500	2024



Hinterland Group, LLC
2051 W Blue Heron Blvd.
Riviera Beach, FL 33404

As of: 06/16/25

CIPP Roster: Position, Experience, Expertise, Licenses

Name	Position	Years of Experience	Expertise	Licenses
Jacob Crowe **Percentage of time Assigned to Work:** - As Needed	General Manager / Project Manager	25 - Utility Construction 14 - Lining	CCTV PACP Liner Installation, Liner Curing Wet-Out, Drainage Repair, Grouting/Pressure Testing Robotic Service Reconnection	PACP MACP LACP
Butch Forrester **Percentage of time Assigned to Work:** - As Needed	Project Manager	27	CCTV PACP Liner Installation, Liner Curing Grouting/Pressure Testing Robotic Service Reconnection	PACP HAZWOPER FDOT MOT Geophysical Survey
Joseph Myer **Percentage of time Assigned to Work:** - As Needed	Safety Director	9	Loss Control & Risk Manager Occupational Safety Manager Construction Safety & Health	OSHA 30
Saul Rivera **Percentage of time Assigned to Work:** - As Needed	Superintendent	15	CCTV PACP Liner Installation, Liner Curing Grouting/Pressure Testing Robotic Service Reconnection	PACP HAZWOPER FDOT MOT
Jose Rivera **Percentage of time Assigned to Work:** - As Needed	Foreman	14	Liner Curing Liner Installation	FDOT MOT
Carlos Angulo **Percentage of time Assigned to Work:** - As Needed	Foreman	7	Liner Curing Liner Installation	FDOT MOT
Dermaine Williams **Percentage of time Assigned to Work:** - As Needed	Foreman / CCTV	9	CCTV PACP Liner Installation, Liner Curing	PACP FDOT MOT
Hassan Saffo **Percentage of time Assigned to Work:** - As Needed	Foreman / CCTV	9	CCTV PACP Liner Installation, Liner Curing	PACP FDOT MOT
Jesse Miller **Percentage of time Assigned to Work:** - As Needed	Foreman / CIPP	4	CCTV PACP Liner Installation, Liner Curing	PACP FDOT MOT
Ivan Pulido **Percentage of time Assigned to Work:** - As Needed	Robotics Operator / Mechanic Laborer	14	Liner Curing, Liner Installation Wet-Out Grouting/Pressure Testing Robotic Service Reconnection	CDL

Hinterland Group CIPP Experience

City	Type	MH-MH	Diameter	Thickness	Total Length
PBC / R&B	SS/Storm		8"-108"		373,147
City of Homestead	SS		8"		20,525
City of Lake Park	Storm		15"-54"		1,936
Cypress Lakes HOA	Storm		18"-36"		950
Winter Springs FDOT-E5U37	Storm		24"-42"		672
City of Palmetto	Storm		18"		93
Charlotte County	Storm		15"-72"		60,061
FDOT MARTIN	Storm		15"-36"		1,877
Desoto	Storm		24"		157
Bradenton	SS		8"-24"		10,395
Delray	SS/Storm		8"-21"		30,238
Lauderdale by the Sea	SS		8"-12"		19,294
Golden Bear	Storm		24"-30"		858
Ormond Beach	Storm		10"-48"		2,842
Clay County	Storm		21"-54"		1,525
Cape Coral	SS		8"-10"		15,054
Manatee County	Storm		15"-84"		35,514
Riviera Beach	SS		8"		1,298
Tampa	SS		8"-30"		26,181
City of West Palm Beach	SS/Storm		8"-48"		29,998
Clearwater	SS/Storm		8"-48"		32,232
Zephyrhills	SS		8"-12"		43,843
Lake Worth	SS		8"-21"		1,722
Bartow	SS		8"-24"		509
Maitland	SS		8"		1,144
Nassau County	Storm		36"		995
Mangonia Park	SS		8"		12,795
Village of Golf	SS/Storm		8"-24"		2,309
Town of Lantana	SS		8"-12"		20,000
Lantana Airport	Storm		18"-24"		606
FGUA	SS		8"		6,000
City of Lake City	SS/Storm		8"-36"		8,856
Seminole County	SS		8"-18"		17,020
Colonial Estates	SS		8"		3,500
City of Maitland	SS		8"		2,136
Sebring	SS		8"		1,685
Miramar	SS		8"-10"		375
N Lauderdale	SS		8"		24,873
Palm Beach Gardens	Storm		15"-48"		1,610
Polk County	SS/Storm		8"-72"		68,223
Loxahatchee River/Jupiter	SS/Storm		8"-36"		29,140
MARTIN COUNTY	Storm		15"54"		10,841
Mulberry	SS		8"		3,391
Stuart	SS		8"-12"		3,329
Seminole Tribe	SS		8"		3,353
Hickory Ridge	SS		18"		92
Fort Lauderdale	Storm		12"-24"		1,455
FLO-TECH FDOT	Storm		18"-24"		463
Cypress Lakes	Storm		15"-72"		7,087
Dade County (Miami)	SS		8"		22,722
River Ridge	Storm		18"		510
Santa Rosa County	Storm		24"-66"		981
Okeechobee	Storm		24"		63
Naples	Storm		8"-36"		16,395
Cooper City	SS		8"-12"		9,344
Pensacola ECUA	SS		8"-15"		75,968
Palm Coast	Storm		15"-60"		1,321
Orange County	SS		8"-12"		79,380
Pipers Landing	Storm		15"-54"		750
Coral Ridge	Storm		15"-36"		916
Largo	SS		8"-18"		25,952
Lantana	SS		8"-24"		5,675
Lands End	Storm		18"		32
FPL	Storm		18"		356
Lee County	Storm		15"-48"		1,572
Tequesta	Storm		15"-42"		5,843
Sarasota	SS		8"-10"		35,183
Maestre	SS		8"		352
Titusville	Storm		15"-54"		8,001
Lakewood Villas	SS		8"		387
Ocean Ridge	SS		8"-10"		500

Palm Bay	Storm		24"		188
Brevard	Storm		21"-30"		266
SWA Leachate	Storm		12"		470
Englewood	SS		8"-12"		15,764
St Lucie	Storm		15"-24"		511
Lauderdale Marine	Storm		15"		228
Georgetown	Storm		24"		688
Goldsboro	SS		8"		3,502
Newberry	SS		8"		1,405
Wellington	Storm		12"-42"		11,988
Village of North Palm Beach	Storm		36"		620
Atlantis	SS		8"		875
PGA Village	Storm		18"-42"		1,851
Bay County	Storm		12"-84"		3,989
Breakfast Point	Storm		60		159
Hallandale	Storm		18		18
Crosswinds HOA	Storm		15"-21"		1,262
ASU Enterprises	Storm		18"		246
FEA Ministries	SS		8"		1,637
Hollywood Plaza POA	Storm		18"-24"		435
Coastal Land Development	Storm		18"		276
Jonathans Landing POA (JL POA)	Storm		30"-72"		469
Highland Beach	SS		8"		105
Lauderhill	Storm		18"		154
Grasslands HOA	Storm		18"30"		892
Parliament East	Storm		15"-24"		460
Volusia County-FDOT	Storm		72"		2,077
Jacaranda	SS		8"		230
Lake Clarke Shores	Storm		15"-36"		500
Dover Engineering	Storm		24"		210
Halfacre Construction	Storm		60"-66"		2,818
Lake Worth Beach	Storm		36"		132
MBR	SS		8"		378
Port St Lucie	Storm		8"-36"		5,240
IRC	SS		8"		105
St Augustine	Storm		15"-42"		568
Duckwood HOA	Storm		15"-24"		222
				SUM:	1,295,232

STORM CIPP History

Size	Quantity
15"-21"	101,957
24"-36"	100,553
42"-108"	139,170

Of this storm CIPP quantity, 215,258 linear feet has been installed since July 2019.
All liners have been manufactured and provided by Global Materials.

Hinterland Group, LLC
2051 W. Blue Heron Blvd.
Riviera Beach, FL. 33404

3/8/2021

For questions or comments please contact us at **(561) 640-3503**

REFERENCE LIST

Owner	Project Title	Completion Date	Contact Information	Cleaned, Televised and Lined Linear Footage	Diameters
Palm Beach County Water Utilities Department	12-063, 14-088, 16-092, 17-016, 16-092	On going	Contact: Pollop Phonpornwithoon Phone: 561-493-6154 PPhonpornwithoon@pbcwater.com	**255,746**	8"-24"
City of Clearwater	Sanitary Sewer Rehab – Section A CIPP – Annual Contract	Annual Contract held since February, 2015	Contact: Rose Lara Phone: 727-224-7062 Rose.Lara@myClearwater.com	**28,225**	8" to 24"
Palm Beach Gardens	StormWater Project	On Going	Contact: Daniel Widdick 561-804-7044 dwiddick@pbgfl.com	**1,379**	12"-36"
Polk County	Storm Water Project	On Going	Contact: Doug Gable 863-535-2285 DougGable@polk-county.net	**37,992**	15"-36"
Charlotte County	Storm Sewer Rehab.	On Going	Contact: Randy Vowell 641-575-3680 Randy.Vowell@charlottefl.com	**24,566**	12"-72"
N Lauderdale	I&I Program	On Going	Contact: George Krawczyk, P.E., CFM 954-724-7070 gkrawczyk@nlauderdale.org	**24,873**	8"-10"
Manatee County	Storm Improvements	On Going	Contact: Clint Rimer 941-708-7430 clint.rimer@mymanatee.org	**13,441**	12"-36"
Martin County	Stormwater Infrastructure	On Going	Contact: Nick Muzia 772-288-5761 nmuzia@martin.fl.us	**5,229**	12"-60"
Zephyrhills	I&I Program	Jan, 2017	Contact: Joey Theel 813-780-0006 JTheel@ci.zephyrhills.fl.us	**34,633**	8"-12"
City of Naples	CIPP Lining	On Going	Contact: Bob Dorta 239-213-5117 rdorta@naplesgov.com	**14,092**	12"-36"
City of Largo	CIPP Lining	On Going	Contact: Brian Highnote 727-587-6713 X 4402 bhighnote@largo.com	**21,964**	12"36"
Town of Palm Beach	E-3 Forcemain Rehabilitation	November, 2014	Contact: Doug Terry Phone: 561-838-5440 Dterry@townofpalmbeach.com	**6,000**	12" Force main
Town of Lantana	CIPP and Manhole Rehab 2015	June, 2015	Contact: Darrell Blom Phone: 561-540-5750 Dblom@lantana.org	**20,000**	8" to 12"
City of Delray	CIPP Lining	On going	Contact: Spencer Britt Phone: 561-243-7164 Britt@mydelraybeach.com	**25,139**	8"-12"
Ormond Beach	I&I Program	July, 2017	Contact: Alex Schuman 386-676-3306 Alex.Schumann@ormondbeach.org	**2,842**	12"-36"

Hinterland Group, LLC
2051 W. Blue Heron Blvd.
Riviera Beach, FL. 33404

3/8/2021

For questions or comments please contact us at **(561) 640-3503**

City of West Palm Beach	Master of Contract for Sanitary Sewer and Stormwater Piping CIPP	Annual Contract Held Since September 2015	Contact: Daniel Roberge Phone: 561-494-1053 Droberge@wpb.org	**20,499**	8" to 36"
Town of Mangonia Park	I&I Program	December, 2016	Contact: David Frodsham Phone: 561-681-5269 Dfrodsham@cgasolutions.com	**12,795**	8"
Lauderdale by the Sea	I&I Program	On going	Contact: Don Prince Phone: 954-640-4233 Email:DonP@lauderdalebythesea-fl.gov	**19,293**	8"-12"

CITY OF ST. PETE BEACH					
WASTEWATER SYSTEM REHABILITATION SERVICES					
ITEM	**DESCRIPTION**	**QTY**	**UNIT**	**UNIT PRICE**	**AMOUNT**
MANHOLE REHABILITATION					
1	Mobilization	1	EA		$ -
2	Flagmen (Per-Flagmen)	20	HR		$ -
3	Multi Lane, Lane Closures (FDOT Index No. 613)	10	EA/DY		$ -
4	Multi Lane, Intersection (FDOT Index No. 615)	10	EA/DY		$ -
5	Arrow Boards - 5' Minimum Horizontal Size	10	EA/DY		$ -
6	Variable Message Board	10	EA/DY		$ -
7	Concrete Barrier (FDOT Index No. 100)	10	EA/DY		$ -
8	Low Profile Barrier (FDOT Index No. 120)	10	EA/DY		$ -
9	Signs in Work Zones	10	EA/DY		$ -
10	6" Solid line Thermo Plastic - Permanent	200	LF		$ -
11	24" Stop Bar, Solid, Thermo Plastic, Perm.	200	LF		$ -
12	6" Skip line (6'-10' Skip) Thermo Plastic-Perm.	200	LF		$ -
13	Barricades Type III, with Warning Lights	1000	EA/DY		$ -
14	Barricades Type I or II, with Warning Lights	1000	EA/DY		$ -
15	Repair Manhole Bench and Channel	10	EA		$ -
16	Repair Chimney, Adjust/Replace MH Casting- Unpaved	10	EA		$ -
17	Repair Chimney, Adjust/Replace MH Casting- Asphalt Pavement	100	EA		$ -
18	Rebuild Corbel/Chimney for Type B Manhole Casting	10	EA		$ -
19	Furnish Manhole Casting - Type B	10	EA		$ -
20	Furnish Manhole Casting - Type E	30	EA		$ -
21	Severe Manhole Infiltration Elimination	10	EA		$ -
22	Chemical Sealing - Grout	50	GAL		$ -
23	Internal Chimney Sealant - Type B Manhole Casing	5	EA		$ -
24	Internal Chimney Sealant - Type E Manhole Casing	10	EA		$ -
25	Additional Access Cost for Manhole Coating	10	EA		$ -
26	Bypass Pumping Setup - 6-10" diameter	5	EA		$ -
27	Bypass Pumping Setup - 12" -14" diameter	20	EA		$ -
28	Bypass Pumping Setup - 15" to 21" diameter	10	EA		$ -
29	Bypass Pumping Setup - 24" diameter	5	EA		$ -
30	Bypass Pumping Operation - 6"-10" diameter	10	DAY		$ -
31	Bypass Pumping Operation - 12"-14" diameter	50	DAY		$ -

32	Bypass Pumping Operation - 15" to 21" diameter	25	DAY		$ -
33	Bypass Pumping Operation - 24" diameter	15	DAY		$ -
34	Pure Calcium Aluminate Cementitious MH Coating - 48" diameter, Initial	50	EA		$ -
35	Pure Calcium Aluminate Cementitious MH Coating - 60" diameter, Initial	10	EA		$ -
36	Pure Calcium Aluminate Cementitious MH Coating - 72" diameter, Initial	5	EA		$ -
37	Pure Calcium Aluminate Cementitious MH Coating - 48" diameter, Additional	250	VF		$ -
38	Pure Calcium Aluminate Cementitious MH Coating - 60" diameter, Additional	50	VF		$ -
39	Pure Calcium Aluminate Cementitious MH Coating - 72" diameter, Additional	25	VF		$ -
40	Reinforced Polymer MH Coating - 48" diameter, Initial	5	EA		$ -
41	Reinforced Polymer MH Coating - 60" diameter, Initial	5	EA		$ -
42	Reinforced Polymer MH Coating - 72" diameter, Initial	5	EA		$ -
43	Reinforced Polymer MH Coating - 48" diameter, Additional	25	VF		$ -
44	Reinforced Polymer MH Coating - 60" diameter, Additional	25	VF		$ -
45	Reinforced Polymer MH Coating - 72" diameter, Additional	25	VF		$ -
46	Concrete Curb Replacement - Type D	100	LF		$ -
47	Concrete Curb Replacement - Type F	100	LF		$ -
48	Concrete Curb Replacement - Miami Curb	100	LF		$ -
49	Concrete Sidewalk Replacement - 4" Thick	50	SY		$ -
50	Concrete Sidewalk Replacement - 6" Thick	50	SY		$ -
51	Concrete Driveway Replacement - 4" Thick	50	SY		$ -
52	Concrete Driveway Replacement - 6" Thick	50	SY		$ -
53	Inflow Dish	100	EA		$ -
	SUBTOTAL - MANHOLE REHABILITATION				$ -
PIPE LINING					
1	Mobilization	1	EA	$ 4,500.00	$ 4,500.00
2	Flagmen (Per-Flagmen)	20	HR	$ 45.00	$ 900.00
3	Multi Lane, Lane Closures (FDOT Index No. 613)	10	EA/DY	$ 850.00	$ 8,500.00
4	Multi Lane, Intersection (FDOT Index No. 615)	10	EA/DY	$ 1,200.00	$ 12,000.00
5	Arrow Boards - 5' Minimum Horizontal Size	10	EA/DY	$ 120.00	$ 1,200.00
6	Variable Message Board	10	EA/DY	$ 125.00	$ 1,250.00
7	Concrete Barrier (FDOT Index No. 100)	10	EA/DY	$ 150.00	$ 1,500.00
8	Low Profile Barrier (FDOT Index No. 120)	10	EA/DY	$ 120.00	$ 1,200.00
9	Signs in Work Zones	10	EA/DY	$ 10.00	$ 100.00
10	6" Solid line Thermo Plastic - Permanent	200	LF	$ 5.00	$ 1,000.00
11	24" Stop Bar, Solid, Thermo Plastic, Perm.	200	LF	$ 12.00	$ 2,400.00

12	6" Skip line (6'-10' Skip) Thermo Plastic-Perm.	200	LF	$ 5.00	$ 1,000.00
13	Barricades Type III, with Warning Lights	1000	EA/DY	$ 10.00	$ 10,000.00
14	Barricades Type I or II, with Warning Lights	1000	EA/DY	$ 10.00	$ 10,000.00
15	CIPP Main Liner 6" Diameter - 4.5 mm thickness	1100	LF	$ 69.00	$ 75,900.00
16	CIPP Main Liner 8" Diameter - 6.0 mm thickness	72200	LF	$ 42.00	$ 3,032,400.00
17	CIPP Main Liner 10" Diameter - 6.0 mm thickness	3600	LF	$ 52.00	$ 187,200.00
18	CIPP Main Liner 12" Diameter - 6.0 mm thickness	2400	LF	$ 63.00	$ 151,200.00
19	CIPP Main Liner 15" Diameter - 7.5 mm thickness	1500	LF	$ 75.00	$ 112,500.00
20	CIPP Main Liner 18" Diameter - 9.0 mm thickness	1800	LF	$ 93.00	$ 167,400.00
21	CIPP Main Liner 21" Diameter - 9.0 mm thickness	2900	LF	$ 102.00	$ 295,800.00
22	CIPP Main Liner 24" Diameter - 10.5 mm thickness	3800	LF	$ 120.00	$ 456,000.00
23	CIPP Main Liner 6" Diameter - Thickness Variance + 1.5mm	300	LF	$ 2.00	$ 600.00
24	CIPP Main Liner 8" Diameter - Thickness Variance + 1.5mm	5000	LF	$ 2.00	$ 10,000.00
25	CIPP Main Liner 10" Diameter - Thickness Variance + 1.5mm	1000	LF	$ 2.00	$ 2,000.00
26	CIPP Main Liner 12" Diameter - Thickness Variance + 1.5mm	1000	LF	$ 2.00	$ 2,000.00
27	CIPP Main Liner 15" Diameter - Thickness Variance + 1.5mm	300	LF	$ 4.00	$ 1,200.00
28	CIPP Main Liner 18" Diameter - Thickness Variance + 1.5mm	300	LF	$ 4.00	$ 1,200.00
29	CIPP Main Liner 21" Diameter - Thickness Variance + 1.5mm	300	LF	$ 4.00	$ 1,200.00
30	CIPP Main Liner 24" Diameter - Thickness Variance + 1.5mm	300	LF	$ 6.00	$ 1,800.00
31	Bypass Pumping Setup - 6-10" diameter	5	EA	$ 1,500.00	$ 7,500.00
32	Bypass Pumping Setup - 12" -14" diameter	45	EA	$ 1,500.00	$ 67,500.00
33	Bypass Pumping Setup - 15" to 21" diameter	20	EA	$ 3,000.00	$ 60,000.00
34	Bypass Pumping Setup - 24" diameter	5	EA	$ 3,000.00	$ 15,000.00
35	Bypass Pumping Operation - 6"-10" diameter	10	DAY	$ 1,500.00	$ 15,000.00
36	Bypass Pumping Operation - 12"-14" diameter	90	DAY	$ 1,500.00	$ 135,000.00
37	Bypass Pumping Operation - 15" to 21" diameter	40	DAY	$ 2,400.00	$ 96,000.00
38	Bypass Pumping Operation - 24" diameter	10	DAY	$ 2,400.00	$ 24,000.00
39	Normal Cleaning - 6" and 8" diameter	73300	LF	$ 5.00	$ 366,500.00
40	Normal Cleaning - 10" and 12" diameter	6000	LF	$ 6.00	$ 36,000.00
41	Normal Cleaning - 15" and 18" diameter	3300	LF	$ 6.00	$ 19,800.00
42	Normal Cleaning - 21" and 24" diameter	6700	LF	$ 9.00	$ 60,300.00
43	Specialty Cleaning - 6" and 8" diameter	1000	LF	$ 12.00	$ 12,000.00
44	Specialty Cleaning - 10" and 12" diameter	100	LF	$ 12.00	$ 1,200.00
45	Specialty Cleaning - 15" and 18" diameter	50	LF	$ 18.00	$ 900.00
46	Specialty Cleaning - 21" and 24" diameter	100	LF	$ 21.00	$ 2,100.00

47	Chemical Sealing of Host Pipe - 10" diameter and less	30	EA	$ 3,600.00	$ 108,000.00
48	Chemical Sealing of Host Pipe - 12" and 15" diameter	10	EA	$ 3,600.00	$ 36,000.00
49	Chemical Sealing of Host Pipe - 18" to 24" diameter	5	EA	$ 4,500.00	$ 22,500.00
50	Chemical Sealing - Grout	100	GAL	$ 36.00	$ 3,600.00
51	Removal & Sealing of Protruding Service Connections	25	EA	$ 300.00	$ 7,500.00
52	Additional Access Cost Main Liner	25	EA	$ 750.00	$ 18,750.00
53	Service Reconnection	200	EA	$ 240.00	$ 48,000.00
54	CIPP Liner Testing	5	EA	$ 450.00	$ 2,250.00
55	Lateral Grouting	10	EA	$ 450.00	$ 4,500.00
				SUBTOTAL - PIPE LINING	$ 5,723,850.00
POINT REPAIRS					
1	Mobilization for Routine Response	20	EA	$ 7,500.00	$ 150,000.00
2	Mobilization for Emergency Response	6	EA	$ 12,000.00	$ 72,000.00
3	Flagmen (Per-Flagmen)	20	HR	$ 45.00	$ 900.00
4	Multi Lane, Lane Closures (FDOT Index No. 613)	5	EA/DY	$ 850.00	$ 4,250.00
5	Multi Lane, Intersection (FDOT Index No. 615)	5	EA/DY	$ 1,200.00	$ 6,000.00
6	Arrow Boards - 5' Minimum Horizontal Size	10	EA/DY	$ 120.00	$ 1,200.00
7	Variable Message Board	10	EA/DY	$ 125.00	$ 1,250.00
8	Concrete Barrier (FDOT Index No. 415)	10	EA/DY	$ 150.00	$ 1,500.00
9	Low Profile Barrier (FDOT Index No. 412)	10	EA/DY	$ 120.00	$ 1,200.00
10	Signs in Work Zones	10	EA/DY	$ 10.00	$ 100.00
11	6" Solid line Thermo Plastic - Permanent	200	LF	$ 5.00	$ 1,000.00
12	24" Stop Bar, Solid, Thermo Plastic, Perm.	200	LF	$ 12.00	$ 2,400.00
13	6" Skip line (6'-10' Skip) Thermo Plastic-Perm.	200	LF	$ 5.00	$ 1,000.00
14	Barricades Type III, with Warning Lights	1000	EA/DY	$ 10.00	$ 10,000.00
15	Barricades Type I or II, with Warning Lights	1000	EA/DY	$ 10.00	$ 10,000.00
16	As-Built Survey	5	EA	$ 4,500.00	$ 22,500.00
17	Excavation, Unsuitable Material	100	CY	$ 95.00	$ 9,500.00
18	Sheeting & Bracing (Left in Place)	500	SF	$ 85.00	$ 42,500.00
19	Sheeting & Bracing, Pipe Trenches (Removed)	2500	SF	$ 65.00	$ 162,500.00
20	Well Point Dewatering Initial - 6'-8' Deep	10	EA	$ 3,200.00	$ 32,000.00
21	Well Point Dewatering Initial - 8'-10' Deep	10	EA	$ 3,800.00	$ 38,000.00
22	Well Point Dewatering Initial - 10'-12' Deep	5	EA	$ 4,500.00	$ 22,500.00
23	Well Point Dewatering Initial - 12'-14' Deep	5	EA	$ 6,800.00	$ 34,000.00
24	Well Point Dewatering Initial - 14'-16' Deep	3	EA	$ 7,200.00	$ 21,600.00

25	Well Point Dewatering Initial - > 16' Deep	3	EA	$ 12,000.00	$ 36,000.00
26	Well Point Dewatering Additional - 6'-8' Deep	200	EA	$ 85.00	$ 17,000.00
27	Well Point Dewatering Additional - 8'-10' Deep	200	EA	$ 90.00	$ 18,000.00
28	Well Point Dewatering Additional - 10'-12' Deep	100	EA	$ 95.00	$ 9,500.00
29	Well Point Dewatering Additional - 12'-14' Deep	100	EA	$ 120.00	$ 12,000.00
30	Well Point Dewatering Additional - 14'-16' Deep	50	EA	$ 200.00	$ 10,000.00
31	Well Point Dewatering Additional - > 16' Deep	50	EA	$ 250.00	$ 12,500.00
32	Jack & Bore 12" x .188" Steel Casing (6" GS)	40	LF		$ -
33	Jack & Bore 16" x .219" Steel Casing (8" GS)	40	LF		$ -
34	Jack & Bore 20" x .250" Steel Casing (10" GS)	40	LF		$ -
35	Jack & Bore 24" x .281" Steel Casing (12" GS)	40	LF		$ -
36	2" Directional Drill HDPE DR 9, IPS OD	200	LF		$ -
37	4" Directional Drill HDPE DR 11, DIPS OD	300	LF		$ -
38	6" Directional Drill HDPE DR 11, DIPS OD	500	LF		$ -
39	8" Directional Drill HDPE DR 11, DIPS OD	500	LF		$ -
40	10" Directional Drill HDPE DR 11, DIPS OD	500	LF		$ -
41	12" Directional Drill HDPE DR 11, DIPS OD	300	LF		$ -
42	6" PVC Pipe, C-900 DR 18 (Gravity Sewer) 0' - 6' Depth	100	LF	$ 120.00	$ 12,000.00
43	6" PVC Pipe, C-900 DR 18 (Gravity Sewer) 6' - 8' Depth	200	LF	$ 130.00	$ 26,000.00
44	6" PVC Pipe, C-900 DR 18 (Gravity Sewer) 8' - 10' Depth	100	LF	$ 140.00	$ 14,000.00
45	6" PVC Pipe, C-900 DR 18 (Gravity Sewer) 10' - 12' Depth	50	LF	$ 180.00	$ 9,000.00
46	6" PVC Pipe, C-900 DR 18 (Gravity Sewer) 12' - 14' Depth	50	LF	$ 225.00	$ 11,250.00
47	6" PVC Pipe, C-900 DR 18 (Gravity Sewer) 14' - 16' Depth	50	LF	$ 350.00	$ 17,500.00
48	6" PVC Pipe, C-900 DR 18 (Gravity Sewer) 16' - 18' Depth	50	LF	$ 700.00	$ 35,000.00
49	8" DI Pipe, CL 350 (Gravity Sewer) 0' - 6' Depth	50	LF	$ 160.00	$ 8,000.00
50	8" DI Pipe, CL 350 (Gravity Sewer) 6' - 8' Depth	100	LF	$ 180.00	$ 18,000.00
51	8" DI Pipe, CL 350 (Gravity Sewer) 8' - 10' Depth	100	LF	$ 225.00	$ 22,500.00
52	8" DI Pipe, CL 350 (Gravity Sewer) 10' - 12' Depth	50	LF	$ 350.00	$ 17,500.00
53	8" DI Pipe, CL 350 (Gravity Sewer) 12' - 14' Depth	50	LF	$ 450.00	$ 22,500.00
54	8" DI Pipe, CL 350 (Gravity Sewer) 14' - 16' Depth	50	LF	$ 650.00	$ 32,500.00
55	8" DI Pipe, CL 350 (Gravity Sewer) 16' - 18' Depth	50	LF	$ 800.00	$ 40,000.00
56	8" PVC Pipe, C-900 DR 18 (Gravity Sewer) 0' - 6' Depth	200	LF	$ 140.00	$ 28,000.00
57	8" PVC Pipe, C-900 DR 18 (Gravity Sewer) 6' - 8' Depth	400	LF	$ 160.00	$ 64,000.00
58	8" PVC Pipe, C-900 DR 18 (Gravity Sewer) 8' - 10' Depth	400	LF	$ 210.00	$ 84,000.00
59	8" PVC Pipe, C-900 DR 18 (Gravity Sewer) 10' - 12' Depth	400	LF	$ 325.00	$ 130,000.00

60	8" PVC Pipe, C-900 DR 18 (Gravity Sewer) 12' - 14' Depth	400	LF	$ 425.00	$ 170,000.00
61	8" PVC Pipe, C-900 DR 18 (Gravity Sewer) 14' - 16' Depth	200	LF	$ 650.00	$ 130,000.00
62	8" PVC Pipe, C-900 DR 18 (Gravity Sewer) 16' - 18' Depth	200	LF	$ 800.00	$ 160,000.00
63	10" DI Pipe, CL 350 (Gravity Sewer) 0' - 6' Depth	50	LF	$ 180.00	$ 9,000.00
64	10" DI Pipe, CL 350 (Gravity Sewer) 6' - 8' Depth	100	LF	$ 200.00	$ 20,000.00
65	10" DI Pipe, CL 350 (Gravity Sewer) 8' - 10' Depth	100	LF	$ 245.00	$ 24,500.00
66	10" DI Pipe, CL 350 (Gravity Sewer) 10' - 12' Depth	50	LF	$ 380.00	$ 19,000.00
67	10" DI Pipe, CL 350 (Gravity Sewer) 12' - 14' Depth	50	LF	$ 500.00	$ 25,000.00
68	10" DI Pipe, CL 350 (Gravity Sewer) 14' - 16' Depth	50	LF	$ 700.00	$ 35,000.00
69	10" DI Pipe, CL 350 (Gravity Sewer) 16' - 18' Depth	50	LF	$ 850.00	$ 42,500.00
70	10" PVC Pipe, C-900 DR 18 (Gravity Sewer) 0' -6' Depth	100	LF	$ 160.00	$ 16,000.00
71	10" PVC Pipe, C-900 DR 18 (Gravity Sewer) 6' - 8' Depth	400	LF	$ 180.00	$ 72,000.00
72	10" PVC Pipe, C-900 DR 18 (Gravity Sewer) 8' - 10' Depth	400	LF	$ 225.00	$ 90,000.00
73	10" PVC Pipe, C-900 DR 18 (Gravity Sewer) 10' - 12' Depth	400	LF	$ 350.00	$ 140,000.00
74	10" PVC Pipe, C-900 DR 18 (Gravity Sewer) 12' - 14' Depth	400	LF	$ 480.00	$ 192,000.00
75	10" PVC Pipe, C-900 DR 18 (Gravity Sewer) 14' - 16' Depth	200	LF	$ 680.00	$ 136,000.00
76	10" PVC Pipe, C-900 DR 18 (Gravity Sewer) 16' - 18' Depth	200	LF	$ 825.00	$ 165,000.00
77	12" DI Pipe, CL 350 (Gravity Sewer) 0' - 6' Depth	50	LF	$ 200.00	$ 10,000.00
78	12" DI Pipe, CL 350 (Gravity Sewer) 6' - 8' Depth	100	LF	$ 250.00	$ 25,000.00
79	12" DI Pipe, CL 350 (Gravity Sewer) 8' - 10' Depth	100	LF	$ 350.00	$ 35,000.00
80	12" DI Pipe, CL 350 (Gravity Sewer) 10' - 12' Depth	100	LF	$ 550.00	$ 55,000.00
81	12" DI Pipe, CL 350 (Gravity Sewer) 12' - 14' Depth	100	LF	$ 650.00	$ 65,000.00
82	12" DI Pipe, CL 350 (Gravity Sewer) 14' - 16' Depth	50	LF	$ 800.00	$ 40,000.00
83	12" DI Pipe, CL 350 (Gravity Sewer) 16' - 18' Depth	50	LF	$ 900.00	$ 45,000.00
84	12" PVC Pipe, C-900 DR 18 (Gravity Sewer) 0' ' 6' Depth	100	LF	$ 180.00	$ 18,000.00
85	12" PVC Pipe, C-900 DR 18 (Gravity Sewer) 6' - 8' Depth	200	LF	$ 225.00	$ 45,000.00
86	12" PVC Pipe, C-900 DR 18 (Gravity Sewer) 8' - 10' Depth	200	LF	$ 325.00	$ 65,000.00
87	12" PVC Pipe, C-900 DR 18 (Gravity Sewer) 10' - 12' Depth	100	LF	$ 525.00	$ 52,500.00
88	12" PVC Pipe, C-900 DR 18 (Gravity Sewer) 12' - 14' Depth	100	LF	$ 625.00	$ 62,500.00
89	12" PVC Pipe, C-900 DR 18 (Gravity Sewer) 14' - 16' Depth	50	LF	$ 750.00	$ 37,500.00
90	12" PVC Pipe, C-900 DR 18 (Gravity Sewer) 16' - 18' Depth	50	LF	$ 850.00	$ 42,500.00
91	16" DI Pipe, CL 350 (Gravity Sewer) 0' - 6' Depth	200	LF	$ 300.00	$ 60,000.00
92	16" DI Pipe, CL 350 (Gravity Sewer) 6' - 8' Depth	400	LF	$ 350.00	$ 140,000.00
93	16" DI Pipe, CL 350 (Gravity Sewer) 8' - 10' Depth	400	LF	$ 425.00	$ 170,000.00
94	16" DI Pipe, CL 350 (Gravity Sewer) 10' - 12' Depth	200	LF	$ 550.00	$ 110,000.00

95	16" DI Pipe, CL 350 (Gravity Sewer) 12' - 14' Depth	200	LF	$ 700.00	$ 140,000.00
96	16" DI Pipe, CL 350 (Gravity Sewer) 14' - 16' Depth	100	LF	$ 800.00	$ 80,000.00
97	16" DI Pipe, CL 350 (Gravity Sewer) 16' - 18' Depth	100	LF	$ 950.00	$ 95,000.00
98	16" PVC Pipe, C-905 DR 18 (Gravity Sewer) 0' - 6' Depth	100	LF	$ 275.00	$ 27,500.00
99	16" PVC Pipe, C-905 DR 18 (Gravity Sewer) 6' - 8' Depth	200	LF	$ 325.00	$ 65,000.00
100	16" PVC Pipe, C-905 DR 18 (Gravity Sewer) 8' - 10' Depth	200	LF	$ 400.00	$ 80,000.00
101	16" PVC Pipe, C-905 DR 18 (Gravity Sewer) 10' - 12' Depth	100	LF	$ 525.00	$ 52,500.00
102	16" PVC Pipe, C-905 DR 18 (Gravity Sewer) 12' - 14' Depth	100	LF	$ 675.00	$ 67,500.00
103	16" PVC Pipe, C-905 DR 18 (Gravity Sewer) 14' - 16' Depth	50	LF	$ 775.00	$ 38,750.00
104	16" PVC Pipe, C-905 DR 18 (Gravity Sewer) 16' - 18' Depth	50	LF	$ 925.00	$ 46,250.00
105	18" DI Pipe, CL 350 (Gravity Sewer) 0' - 6' Depth	200	LF	$ 350.00	$ 70,000.00
106	18" DI Pipe, CL 350 (Gravity Sewer) 6' - 8' Depth	400	LF	$ 400.00	$ 160,000.00
107	18" DI Pipe, CL 350 (Gravity Sewer) 8' - 10' Depth	400	LF	$ 475.00	$ 190,000.00
108	18" DI Pipe, CL 350 (Gravity Sewer) 10' - 12' Depth	200	LF	$ 600.00	$ 120,000.00
109	18" DI Pipe, CL 350 (Gravity Sewer) 12' - 14' Depth	200	LF	$ 750.00	$ 150,000.00
110	18" DI Pipe, CL 350 (Gravity Sewer) 14' - 16' Depth	100	LF	$ 850.00	$ 85,000.00
111	18" DI Pipe, CL 350 (Gravity Sewer) 16' - 18' Depth	100	LF	$ 1,000.00	$ 100,000.00
112	18" PVC Pipe, C-905 DR 21 (Gravity Sewer) 0' - 6' Depth	100	LF	$ 325.00	$ 32,500.00
113	18" PVC Pipe, C-905 DR 21 (Gravity Sewer) 6' - 8' Depth	200	LF	$ 375.00	$ 75,000.00
114	18" PVC Pipe, C-905 DR 21 (Gravity Sewer) 8' - 10' Depth	200	LF	$ 450.00	$ 90,000.00
115	18" PVC Pipe, C-905 DR 21 (Gravity Sewer) 10' - 12' Depth	100	LF	$ 575.00	$ 57,500.00
116	18 PVC Pipe, C-905 DR 21 (Gravity Sewer) 12' - 14' Depth	100	LF	$ 725.00	$ 72,500.00
117	18" PVC Pipe, C-905 DR 21 (Gravity Sewer) 14' - 16' Depth	50	LF	$ 825.00	$ 41,250.00
118	18" PVC Pipe, C-905 DR 21 (Gravity Sewer) 16' - 18' Depth	50	LF	$ 975.00	$ 48,750.00
119	21" DI Pipe, CL 350 (Gravity Sewer) 0' - 6' Depth	200	LF	$ 500.00	$ 100,000.00
120	21" DI Pipe, CL 350 (Gravity Sewer) 6' - 8' Depth	400	LF	$ 550.00	$ 220,000.00
121	21" DI Pipe, CL 350 (Gravity Sewer) 8' - 10' Depth	400	LF	$ 650.00	$ 260,000.00
122	21" DI Pipe, CL 350 (Gravity Sewer) 10' - 12' Depth	200	LF	$ 750.00	$ 150,000.00
123	21" DI Pipe, CL 350 (Gravity Sewer) 12' - 14' Depth	200	LF	$ 850.00	$ 170,000.00
124	21" DI Pipe, CL 350 (Gravity Sewer) 14' - 16' Depth	100	LF	$ 900.00	$ 90,000.00
125	21" DI Pipe, CL 350 (Gravity Sewer) 16' - 18' Depth	100	LF	$ 1,200.00	$ 120,000.00
126	21" PVC Pipe, C-905 DR 21 (Gravity Sewer) 0' - 6' Depth	100	LF	$ 500.00	$ 50,000.00
127	21" PVC Pipe, C-905 DR 21 (Gravity Sewer) 6' - 8' Depth	200	LF	$ 550.00	$ 110,000.00
128	21" PVC Pipe, C-905 DR 21 (Gravity Sewer) 8' - 10' Depth	200	LF	$ 650.00	$ 130,000.00
129	21" PVC Pipe, C-905 DR 21 (Gravity Sewer) 10' - 12' Depth	100	LF	$ 750.00	$ 75,000.00

130	21" PVC Pipe, C-905 DR 21 (Gravity Sewer) 12' - 14' Depth	100	LF	$ 850.00	$ 85,000.00
131	21" PVC Pipe, C-905 DR 21 (Gravity Sewer) 14' - 16' Depth	50	LF	$ 900.00	$ 45,000.00
132	21" PVC Pipe, C-905 DR 21 (Gravity Sewer) 16' - 18' Depth	50	LF	$ 1,200.00	$ 60,000.00
133	24" DI Pipe, CL 350 (Gravity Sewer) 0' - 6' Depth	200	LF	$ 500.00	$ 100,000.00
134	24" DI Pipe, CL 350 (Gravity Sewer) 6' - 8' Depth	400	LF	$ 550.00	$ 220,000.00
135	24" DI Pipe, CL 350 (Gravity Sewer) 8' - 10' Depth	400	LF	$ 650.00	$ 260,000.00
136	24" DI Pipe, CL 350 (Gravity Sewer) 10' - 12' Depth	200	LF	$ 750.00	$ 150,000.00
137	24" DI Pipe, CL 350 (Gravity Sewer) 12' - 14' Depth	200	LF	$ 850.00	$ 170,000.00
138	24" DI Pipe, CL 350 (Gravity Sewer) 14' - 16' Depth	100	LF	$ 900.00	$ 90,000.00
139	24" DI Pipe, CL 350 (Gravity Sewer) 16' - 18' Depth	100	LF	$ 1,200.00	$ 120,000.00
140	24" PVC Pipe, C-905 DR 21 (Gravity Sewer) 0' - 6' Depth	100	LF	$ 500.00	$ 50,000.00
141	24" PVC Pipe, C-905 DR 21 (Gravity Sewer) 6' - 8' Depth	200	LF	$ 550.00	$ 110,000.00
142	24" PVC Pipe, C-905 DR 21 (Gravity Sewer) 8' - 10' Depth	200	LF	$ 650.00	$ 130,000.00
143	24" PVC Pipe, C-905 DR 21 (Gravity Sewer) 10' - 12' Depth	100	LF	$ 750.00	$ 75,000.00
144	24" PVC Pipe, C-905 DR 21 (Gravity Sewer) 12' - 14' Depth	100	LF	$ 850.00	$ 85,000.00
145	24" PVC Pipe, C-905 DR 21 (Gravity Sewer) 14' - 16' Depth	50	LF	$ 900.00	$ 45,000.00
146	24" PVC Pipe, C-905 DR 21 (Gravity Sewer) 16' - 18' Depth	50	LF	$ 1,200.00	$ 60,000.00
147	Install PVC Cleanout	10	EA	$ 3,400.00	$ 34,000.00
148	Replace PVC Cleanout with Manhole Structure	10	EA	$ 18,000.00	$ 180,000.00
149	Remove Pipe 2" or 4" (Gravity Sewer)	200	LF	$ 35.00	$ 7,000.00
150	Remove Pipe 6" or 8" (Gravity Sewer)	400	LF	$ 45.00	$ 18,000.00
151	Remove Pipe 10" or 12" (Gravity Sewer)	400	LF	$ 60.00	$ 24,000.00
152	Remove Pipe 15", 16" or 18" (Gravity Sewer)	200	LF	$ 85.00	$ 17,000.00
153	Remove Pipe 21" or 24" (Gravity Sewer)	200	LF	$ 120.00	$ 24,000.00
154	4" Pipe - Install or Adjust Service Lateral 0'-6' Deep	3	EA	$ 4,800.00	$ 14,400.00
155	4" Pipe - Install or Adjust Service Lateral 6'-8' Deep	3	EA	$ 5,400.00	$ 16,200.00
156	4" Pipe - Install or Adjust Service Lateral 8'-10' Deep	3	EA	$ 6,200.00	$ 18,600.00
157	4" Pipe - Install or Adjust Service Lateral 10'-12'Deep	3	EA	$ 7,600.00	$ 22,800.00
158	4" Pipe - Install or Adjust Service Lateral 12'-14'Deep	2	EA	$ 18,000.00	$ 36,000.00
159	4" Pipe - Install or Adjust Service Lateral 14'-16'Deep	2	EA	$ 24,000.00	$ 48,000.00
160	4" Pipe - Install or Adjust Service Lateral 16'-18' Deep	2	EA	$ 35,000.00	$ 70,000.00
161	6" Pipe - Install or Adjust Service Lateral 0'-6' Deep	3	EA	$ 5,000.00	$ 15,000.00
162	6" Pipe - Install or Adjust Service Lateral 6'-8' Deep	3	EA	$ 5,600.00	$ 16,800.00
163	6" Pipe - Install or Adjust Service Lateral 8'-10' Deep	3	EA	$ 6,400.00	$ 19,200.00
164	6" Pipe - Install or Adjust Service Lateral 10'-12' Deep	3	EA	$ 7,800.00	$ 23,400.00

165	6" Pipe - Install or Adjust Service Lateral 12'-14' Deep	2	EA	$ 19,000.00	$ 38,000.00
166	6" Pipe - Install or Adjust Service Lateral 14'-16' Deep	2	EA	$ 25,000.00	$ 50,000.00
167	6" Pipe - Install or Adjust Service Lateral 16'-18' Deep	2	EA	$ 36,000.00	$ 72,000.00
168	2" Sewer Line Manhole Connection	3	EA	$ 3,200.00	$ 9,600.00
169	4" Sewer Line Manhole Connection	3	EA	$ 3,600.00	$ 10,800.00
170	6" Sewer Line Manhole Connection	5	EA	$ 4,000.00	$ 20,000.00
171	8" Sewer Line Manhole Connection	5	EA	$ 4,200.00	$ 21,000.00
172	10" Sewer Line Manhole Connection	3	EA	$ 4,500.00	$ 13,500.00
173	12" Sewer Line Manhole Connection	3	EA	$ 4,800.00	$ 14,400.00
174	16" Sewer Line Manhole Connection	3	EA	$ 6,000.00	$ 18,000.00
175	18" Sewer Line Manhole Connection	2	EA	$ 7,200.00	$ 14,400.00
176	21” Sewer Line Manhole Connection	2	EA	$ 7,800.00	$ 15,600.00
177	24” Sewer Line Manhole Connection	2	EA	$ 8,500.00	$ 17,000.00
178	2" Inside Drop Connection	3	EA	$ 3,500.00	$ 10,500.00
179	4" Inside Drop Connection	3	EA	$ 3,800.00	$ 11,400.00
180	6" Inside Drop Connection	3	EA	$ 4,200.00	$ 12,600.00
181	8" Inside Drop Connection	5	EA	$ 4,500.00	$ 22,500.00
182	10" Inside Drop Connection	3	EA	$ 6,000.00	$ 18,000.00
183	12" Inside Drop Connection	3	EA	$ 6,200.00	$ 18,600.00
184	15"/16" Inside Drop Connection	3	EA	$ 7,500.00	$ 22,500.00
185	18" Inside Drop Connection	2	EA	$ 9,500.00	$ 19,000.00
186	21" Inside Drop Connection	3	EA	$ 12,000.00	$ 36,000.00
187	24" Inside Drop Connection	2	EA	$ 15,000.00	$ 30,000.00
188	Grouting Out of Service Pipe (Force Main)	30	CY	$ 475.00	$ 14,250.00
189	Disconnect & Plug 2" or 4" Pipe	5	EA	$ 2,400.00	$ 12,000.00
190	Disconnect & Plug 6" or 8" Pipe	5	EA	$ 3,500.00	$ 17,500.00
191	Disconnect & Plug 10" or 12" Pipe	5	EA	$ 4,800.00	$ 24,000.00
192	2" PVC Restrained Joint Pipe & Fittings FM, SDR 21	200	LF	$ 65.00	$ 13,000.00
193	4" PVC Pipe, C-900 DR 18 (Force Main)	500	LF	$ 85.00	$ 42,500.00
194	4" PVC Restrained Joint Pipe & Fittings FM, C-900 DR 18	100	LF	$ 95.00	$ 9,500.00
195	6" PVC Pipe, C-900 DR 18 (Force Main)	500	LF	$ 95.00	$ 47,500.00
196	6" PVC Restrained Joint Pipe & Fittings FM, C-900 DR 18	100	LF	$ 110.00	$ 11,000.00
197	8" PVC Pipe, C-900 DR 18 (Force Main)	500	LF	$ 120.00	$ 60,000.00
198	8" PVC Restrained Joint Pipe & Fittings FM, C-900 DR 18	100	LF	$ 130.00	$ 13,000.00
199	10" PVC Pipe, C-900 DR 18 (Force Main)	500	LF	$ 140.00	$ 70,000.00

200	10" PVC Restrained Joint Pipe & Fittings FM, C-900 DR 18	100	LF	$ 150.00	$ 15,000.00
201	12" PVC Pipe, C-900 DR 18 (Force Main)	300	LF	$ 160.00	$ 48,000.00
202	12" PVC Restrained Joint Pipe & Fittings FM, C-900 DR 18	100	LF	$ 170.00	$ 17,000.00
203	2" Restrained Joints	20	EA	$ 1,200.00	$ 24,000.00
204	4" Restrained Joints	20	EA	$ 1,400.00	$ 28,000.00
205	6" Restrained Joints	20	EA	$ 1,500.00	$ 30,000.00
206	8" Restrained Joints	20	EA	$ 2,000.00	$ 40,000.00
207	10" Restrained Joints	20	EA	$ 2,400.00	$ 48,000.00
208	12" Restrained Joints	20	EA	$ 3,000.00	$ 60,000.00
209	2"-4" Forcemain Pipe and Appurtenances - Over Depth Excavation	400	LF	$ 30.00	$ 12,000.00
210	6"-8" Forcemain Pipe and Appurtenances - Over Depth Excavation	500	LF	$ 45.00	$ 22,500.00
211	10"-12" Forcemain Pipe and Appurtenances - Over Depth Excavation	200	LF	$ 60.00	$ 12,000.00
212	Remove Out of Service Pipe 2" or 4" (Force Main)	500	LF	$ 30.00	$ 15,000.00
213	Remove Out of Service Pipe 6" or 8" (Force Main)	1000	LF	$ 35.00	$ 35,000.00
214	Remove Out of Service Pipe 10" or 12" (Force Main)	500	LF	$ 50.00	$ 25,000.00
215	2" Sleeved Connection	6	EA	$ 3,200.00	$ 19,200.00
216	4" Sleeved Connection	6	EA	$ 3,400.00	$ 20,400.00
217	6" Sleeved Connection	10	EA	$ 3,800.00	$ 38,000.00
218	8" Sleeved Connection	10	EA	$ 4,500.00	$ 45,000.00
219	10" Sleeved Connection	4	EA	$ 4,800.00	$ 19,200.00
220	12" Sleeved Connection	4	EA	$ 5,200.00	$ 20,800.00
221	Reverse Deadman for 2" or 4" Pipe	3	EA	$ 2,500.00	$ 7,500.00
222	Reverse Deadman for 6" or 8" Pipe	5	EA	$ 3,200.00	$ 16,000.00
223	Reverse Deadman for 10" or 12" Pipe	3	EA	$ 4,000.00	$ 12,000.00
224	DI Fittings FM C 153 (Compact Body)	2	TN	$ 19,500.00	$ 39,000.00
225	2" Air Release Assembly (In-line)	2	EA	$ 12,000.00	$ 24,000.00
226	2" Air Release Assembly (Offset)	2	EA	$ 13,500.00	$ 27,000.00
227	2" RWGV (Resilient Wedge Gate Valve) & Box	4	EA	$ 2,000.00	$ 8,000.00
228	4" RWGV & Box C 515	4	EA	$ 3,000.00	$ 12,000.00
229	6" RWGV & Box C 515	10	EA	$ 4,000.00	$ 40,000.00
230	8" RWGV & Box C 515	5	EA	$ 6,000.00	$ 30,000.00
231	10" RWGV & Box C 515	2	EA	$ 12,000.00	$ 24,000.00
232	12" RWGV & Box C 515	2	EA	$ 14,000.00	$ 28,000.00
233	Adjust Valve Box to Finished Grade (In Pavement)	5	EA	$ 850.00	$ 4,250.00
234	Adjust Valve Box to Finished Grade (Outside of Pavement)	5	EA	$ 450.00	$ 2,250.00

235	4" Line Stop	1	EA	$ 6,500.00	$ 6,500.00
236	6" Line Stop	1	EA	$ 8,500.00	$ 8,500.00
237	8" Line Stop	1	EA	$ 9,000.00	$ 9,000.00
238	10" Line Stop	1	EA	$ 12,000.00	$ 12,000.00
239	12" Line Stop	1	EA	$ 13,500.00	$ 13,500.00
240	4" x 2" Tapping Saddle Valve & Box	2	EA		$ -
241	4" x 4" Tapping Sleeve Valve & Box	2	EA		$ -
242	6" x 2" Tapping Saddle Valve & Box	2	EA		$ -
243	6" x 4" Tapping Sleeve Valve & Box	2	EA		$ -
244	6" x 6" Tapping Sleeve Valve & Box	2	EA		$ -
245	8" x 2" Tapping Saddle Valve & Box	2	EA		$ -
246	8" x 4" Tapping Sleeve Valve & Box	2	EA		$ -
247	8" x 6" Tapping Sleeve Valve & Box	2	EA		$ -
248	8" x 8" Tapping Sleeve Valve & Box	2	EA		$ -
249	10" x 2" Tapping Saddle Valve & Box	2	EA		$ -
250	10" x 4" Tapping Sleeve Valve & Box	2	EA		$ -
251	10" x 6" Tapping Sleeve Valve & Box	2	EA		$ -
252	10" x 8" Tapping Sleeve Valve & Box	2	EA		$ -
253	10" x 10" Tapping Sleeve Valve & Box	2	EA		$ -
254	12" x 2" Tapping Saddle Valve & Box	2	EA		$ -
255	12" x 4" Tapping Sleeve Valve & Box	2	EA		$ -
256	12" x 6" Tapping Sleeve Valve & Box	2	EA		$ -
257	12" x 8" Tapping Sleeve Valve & Box	2	EA		$ -
258	12" x 10" Tapping Sleeve Valve & Box	2	EA		$ -
259	12" x 12" Tapping Sleeve Valve & Box	2	EA		$ -
260	4' Dia. - Precast Manhole Standard	30	VF	$ 4,300.00	$ 129,000.00
261	4' Dia. - Precast Manhole Inside Drop	10	VF	$ 4,300.00	$ 43,000.00
262	4' Dia. - Precast Manhole Outside Drop	10	VF	$ 4,500.00	$ 45,000.00
263	5' Dia. - Precast Manhole Standard	30	VF	$ 4,500.00	$ 135,000.00
264	5' Dia. - Precast Manhole Inside Drop	10	VF	$ 4,500.00	$ 45,000.00
265	5' Dia. - Precast Manhole Outside Drop	10	VF	$ 4,600.00	$ 46,000.00
266	5' Dia. - Precast Air Release Manhole	10	VF	$ 4,000.00	$ 40,000.00
267	6' Dia. - Precast Manhole Standard	30	VF	$ 5,000.00	$ 150,000.00
268	6' Dia. - Precast Manhole Inside Drop	10	VF	$ 5,000.00	$ 50,000.00
269	6' Dia. - Precast Manhole Outside Drop	10	VF	$ 5,400.00	$ 54,000.00

270	Removal of Existing Manhole	3	EA	$ 3,500.00	$ 10,500.00
271	Remove Existing Manhole Additional	30	VF	$ 2,500.00	$ 75,000.00
272	Initial Excavation - 0'-6' Deep	5	EA		$ -
273	Initial Excavation - 6'-8' Deep	6	EA		$ -
274	Initial Excavation - 8'-10' Deep	6	EA		$ -
275	Initial Excavation - 10'-12' Deep	6	EA		$ -
276	Initial Excavation - 12'-14' Deep	3	EA		$ -
277	Initial Excavation - 14'-16' Deep	3	EA		$ -
278	Initial Excavation - 16'-18' Deep	2	EA		$ -
279	Initial Excavation - 18'-20' Deep	2	EA		$ -
280	Additional Excavation - 0'-6' Deep	100	LF		$ -
281	Additional Excavation - 6'-8' Deep	100	LF		$ -
282	Additional Excavation - 8'-10' Deep	100	LF		$ -
283	Additional Excavation - 10'-12' Deep	100	LF		$ -
284	Additional Excavation - 12'-14' Deep	100	LF		$ -
285	Additional Excavation - 14'-16' Deep	100	LF		$ -
286	Additional Excavation - 16'-18' Deep	50	LF		$ -
287	Additional Excavation - 18'-20' Deep	50	LF		$ -
288	Wastewater Bypass Pumping, Set up, 6" - 10" diameter	5	EA		$ -
289	Wastewater Bypass Pumping, Set up, 12" - 14" diameter	2	EA		$ -
290	Wastewater Bypass Pumping, Set up, 15" - 21" diameter	2	EA		$ -
291	Wastewater Bypass Pumping, Set up, 24" diameter	2	EA		$ -
292	Wastewater Bypass Pumping, Operation, 6" - 10" diameter	10	DAY		$ -
293	Wastewater Bypass Pumping, Operation, 12" - 14" diameter	5	DAY		$ -
294	Wastewater Bypass Pumping, Operation, 15" - 21" diameter	5	DAY		$ -
295	Wastewater Bypass Pumping, Operation, 24" diameter	2	DAY		$ -
296	6" Dia. Pipe Gravity Sewer Point Repair (DI Replacement Pipe)	2	EA		$ -
297	6" Dia. Pipe Gravity Sewer Point Repair (PVC Replacement Pipe)	5	EA		$ -
298	8" Dia. Pipe Gravity Sewer Point Repair (DI Replacement Pipe)	2	EA		$ -
299	8" Dia. Pipe Gravity Sewer Point Repair (PVC Replacement Pipe)	5	EA		$ -
300	10" Dia. Pipe Gravity Sewer Point Repair (DI Replacement Pipe)	2	EA		$ -
301	10" Dia. Pipe Gravity Sewer Point Repair (PVC Replacement Pipe)	5	EA		$ -
302	12" Dia. Pipe Gravity Sewer Point Repair (DI Replacement Pipe)	2	EA		$ -
303	12" Dia. Pipe Gravity Sewer Point Repair (PVC Replacement Pipe)	5	EA		$ -
304	15"/16" Dia. Pipe Gravity Sewer Point Repair (DI Replacement Pipe)	2	EA		$ -

305	15"/16" Dia. Pipe Gravity Sewer Point Repair (PVC Rplacement Pipe)	2	EA		$	-
306	18" Dia. Pipe Gravity Sewer Point Repair (DI Replacement Pipe)	2	EA		$	-
307	18" Dia. Pipe Gravity Sewer Point Repair (PVC Replacement Pipe)	2	EA		$	-
308	21" Dia. Pipe Gravity Sewer Point Repair (DI Replacement Pipe)	2	EA		$	-
309	21" Dia. Pipe Gravity Sewer Point Repair(PVC Replacement Pipe)	2	EA		$	-
310	24" Dia. Pipe Gravity Sewer Point Repair (DI Replacement Pipe)	2	EA		$	-
311	24" Dia. Pipe Gravity Sewer Point Repair (PVC Replacement Pipe)	2	EA		$	-
312	6" Dia. Pipe Gravity Sewer Point Repair - Additional Length (DI Replacement Pipe)	20	LF		$	-
313	6" Dia. Pipe Gravity Sewer Point Repair - Additional Length (PVC Replacement Pipe)	50	LF		$	-
314	8" Dia. Pipe Gravity Sewer Point Repair - Additional Length (DI Replacement Pipe)	20	LF		$	-
315	8" Dia. Pipe Gravity Sewer Point Repair - Additional Length (PVC Replacement Pipe)	100	LF		$	-
316	10" Dia. Pipe Gravity Sewer Point Repair - Additional Length (DI Replacement Pipe)	20	LF		$	-
317	10" Dia. Pipe Gravity Sewer Point Repair - Additional Length (PVC Replacement Pipe)	100	LF		$	-
318	12" Dia. Pipe Gravity Sewer Point Repair Additional Length (DI Replacement Pipe)	50	LF		$	-
319	12" Dia. Pipe Gravity Sewer Point Repair - Additional Length (PVC Replacement Pipe)	20	LF		$	-
320	15"/16" Dia. Pipe Gravity Sewer Point Repair - Additional Length (DI Replacement Pipe)	20	LF		$	-
321	15"/16" Dia. Pipe Gravity Sewer Point Repair - Additional Length (PVC Replacement Pipe)	50	LF		$	-
322	18" Dia. Pipe Gravity Sewer Point Repair - Additional Length (DI Replacement Pipe)	20	LF		$	-
323	18" Dia. Pipe Gravity Sewer Point Repair - Additional Length (PVC Replacement Pipe)	50	LF		$	-
324	21" Dia. Pipe Gravity Sewer Point Repair - Additional Length (DI Replacement Pipe)	20	LF		$	-
325	21" Dia. Pipe Gravity Sewer Point Repair - Additional Length (PVC Replacement Pipe)	50	LF		$	-
326	24" Dia. Pipe Gravity Sewer Point Repair - Additional Length (DI Replacement Pipe)	20	LF		$	-
327	24" Dia. Pipe Gravity Sewer Point Repair - Additional Length (PVC Replacement Pipe)	50	LF		$	-
328	2" Dia. Pipe Forcemain Point Repair	3	EA		$	-
329	4" Dia. Pipe Forcemain Point Repair	3	EA		$	-
330	6" Dia. Pipe Forcemain Point Repair	3	EA		$	-
331	8" Dia. Pipe Forcemain Point Repair	3	EA		$	-
332	10" Dia. Pipe Forcemain Point Repair	2	EA		$	-
333	12" Dia. Pipe Forcemain Point Repair	2	EA		$	-
334	Replace Manhole Ring & Cover (Asphalt Pavement)	5	EA		$	-
335	Replace Manhole Ring & Cover (Unpaved)	5	EA		$	-
336	Manhole Bench Replacement, 4' Diameter	2	EA		$	-
337	Manhole Bench Replacement, 5' Diameter	2	EA		$	-
338	Manhole Bench Replacement, 6' Diameter	2	EA		$	-
339	Adjust Manhole Ring & Cover to Finished Grade (In Pavement)	5	EA		$	-

340	Adjust Manhole Ring & Cover to Finished Grade (Outside of Pavement)	5	EA		$ -
341	Flowable Concrete Fill	100	CY		$ -
342	Roadway Base, Lime Rock, Primed, Min. LBR 100, Variable Thickness	120	CY		$ -
343	Roadway Base, Crushed Concrete/Graded Aggregate, Min. LBR 100, Variable Thickness	120	CY		$ -
344	Superpave Asphalt Base, Type B 12.5, Variable Thickness	50	TN		$ -
345	Superpave Asphalt Concrete, Type SP 9.5, Fine, Traffic Level C, Variable Thickness	100	TN		$ -
346	Superpave Asphalt Concrete, Type SP 12.5, Fine, Traffic Level C, Variable Thickness	100	TN		$ -
347	Pavement, Cement Concrete, 6" Min Thickness (Driveways)	100	SY		$ -
348	Pavement, Cement Concrete, 8" Thick	100	SY		$ -
349	Driveway Restoration, In Kind, Decorative Block	50	SY		$ -
350	Milling Existing Asphalt Pavement, 1/2" Average Depth	150	SY		$ -
351	Milling Existing Asphalt Pavement, 3/4" Average Depth	150	SY		$ -
352	Milling Existing Asphalt Pavement, 1" Average Depth	150	SY		$ -
353	Curb & Gutter, Concrete, FDOT Type D	100	LF		$ -
354	Curb & Gutter Concrete, FDOT Type F	100	LF		$ -
355	Curb & Gutter, Concrete, Miami Curb	300	LF		$ -
356	Valley Gutter, Concrete, PCED Index 1315	100	LF		$ -
357	Sidewalk, Concrete, 4" Min. Thickness, Remove and Replace	500	SF		$ -
358	Sidewalk, Concrete, 6" Min. Thickness, Remove and Replace	500	SF		$ -
359	Sodding	4500	SF		$ -
360	Sectional Liner, 6" - 24" Pipe	50	EA		$ -
				SUBTOTAL - POINT REPAIRS	$12,387,800.00
				GRAND TOTAL	$18,111,650.00

Bid quantities are for comparison purposes only.
This contract consists of various projects which are not yet defined and no quantities are guaranteed.

EXHIBIT "D"

Conditional Federal/Grant-Funded Contract Addendum

(Place Conditional Federal/Grant-Funded Contract Addendum behind this page)

EXHIBIT "D"
CONDITIONAL FEDERAL/GRANT-FUNDED CONTRACT ADDENDUM

1. Applicability

1.1 This Exhibit applies only if activated under Section 25 of the Agreement or under a Task Order. If not activated, this Exhibit is reserved and has no operative effect.
1.2 If activated, this Exhibit supplements the Agreement and applies to the federally funded or grant-funded Work only. Contractor shall comply with all applicable requirements of the federal award, grant agreement, pass-through entity, program rules, and applicable law.
1.3 The City may provide additional award-specific clauses, certifications, forms, wage determinations, reporting requirements, or flow-down provisions. Contractor shall comply with such requirements as a condition of performing the affected Work and receiving payment from the applicable funding source.

2. Federal Award and Grant Information

Federal/Grant Program: [insert]
Federal Awarding Agency: [insert]
Pass-Through Entity: [insert, if applicable]
Assistance Listing Number: [insert, if applicable]
Federal Award Identification Number: [insert, if applicable]
Award or Disaster Declaration Date: [insert, if applicable]
Project Number: [insert]
Special Award Conditions: [insert or attach]

3. Remedies for Breach

For contracts exceeding the simplified acquisition threshold, Contractor acknowledges that the City may exercise all administrative, contractual, legal, and equitable remedies available under the Contract Documents and applicable law if Contractor violates or breaches contract terms. Remedies may include withholding payment, requiring correction, suspension of Work, termination, procurement from alternate sources, damages, sanctions, and any other appropriate remedy.

4. Termination for Cause and Convenience

For contracts in excess of $10,000, the City may terminate the federally funded or grant-funded Work for cause or convenience as provided in the Agreement. The notice of termination will identify the effective date and the manner of termination. Contractor shall be paid only for authorized Work satisfactorily performed before the effective date of termination, subject to documentation, offsets, allowable cost requirements, and applicable grant rules.

5. Equal Employment Opportunity

Except as otherwise provided under 41 C.F.R. Part 60, if the Work is a federally assisted construction contract as defined in 41 C.F.R. § 60-1.3, Contractor shall comply with the equal opportunity clause in 41 C.F.R. § 60-1.4(b), which is incorporated by reference as if fully set forth

RESERVED

herein, and shall include the required clause in covered subcontracts and purchase orders.

6. Davis-Bacon Act and Copeland Anti-Kickback Act

When required by federal program legislation, all prime construction contracts in excess of $2,000 must include compliance with the Davis-Bacon Act, 40 U.S.C. §§ 3141-3148, as supplemented by Department of Labor regulations at 29 C.F.R. Part 5. If Davis-Bacon applies, Contractor shall pay laborers and mechanics at rates not less than the applicable wage determination, pay wages not less than once per week, submit certified payrolls if required, and comply with all applicable labor standards.
If Davis-Bacon applies, Contractor shall also comply with the Copeland "Anti-Kickback" Act, 40 U.S.C. § 3145, as supplemented by 29 C.F.R. Part 3, and shall not induce any person employed in the construction, completion, or repair of public work to give up any part of compensation to which the person is entitled. Contractor shall report suspected or reported violations to the City.

7. Contract Work Hours and Safety Standards Act

Where applicable, for contracts in excess of $100,000 that involve the employment of mechanics or laborers, Contractor shall comply with 40 U.S.C. §§ 3702 and 3704, as supplemented by Department of Labor regulations at 29 C.F.R. Part 5. Contractor shall compute wages based on a standard 40-hour workweek and shall compensate covered workers at not less than one and one-half times the basic rate of pay for hours worked in excess of 40 hours in a workweek. No laborer or mechanic shall be required to work under unsanitary, hazardous, or dangerous conditions. These requirements do not apply to purchases of supplies, materials, or articles ordinarily available on the open market, or to contracts for transportation or transmission of intelligence.

8. Rights to Inventions

If the federal award meets the definition of "funding agreement" under 37 C.F.R. § 401.2(a), and the Work involves substitution of parties, assignment, or performance of experimental, developmental, or research work under that funding agreement, Contractor shall comply with 37 C.F.R. Part 401 and any implementing regulations issued by the awarding agency.

9. Clean Air Act and Federal Water Pollution Control Act

For contracts and subgrants exceeding $150,000, Contractor shall comply with all applicable standards, orders, and regulations issued pursuant to the Clean Air Act, 42 U.S.C. §§ 7401-7671q, and the Federal Water Pollution Control Act, 33 U.S.C. §§ 1251-1387. Contractor shall report each violation to the City, and the City will report violations as required to the federal awarding agency and the appropriate EPA regional office. Contractor shall include these requirements in each covered subcontract exceeding $150,000.

10. Debarment and Suspension

Contractor shall comply with Executive Orders 12549 and 12689 and 2 C.F.R. Part 180. Contractor shall not enter into covered transactions with parties listed on the governmentwide exclusions in the System for Award Management. Contractor shall verify that Contractor, its principals, and its affiliates are not excluded or disqualified and shall include this requirement in lower-tier covered

RESERVED

transactions.

11. Byrd Anti-Lobbying Amendment

For awards exceeding $100,000, Contractor shall comply with the Byrd Anti-Lobbying Amendment, 31 U.S.C. § 1352. Contractor shall certify that it has not and will not use federal appropriated funds to pay any person or organization for influencing or attempting to influence an officer or employee of an agency, a member of Congress, an officer or employee of Congress, or an employee of a member of Congress in connection with obtaining a federal contract, grant, or other covered award. Contractor shall disclose lobbying with non-federal funds as required and shall require each lower tier to make the same certification and disclosure.

12. Procurement of Recovered Materials

Contractor shall comply with 2 C.F.R. § 200.323 and Section 6002 of the Solid Waste Disposal Act, as amended by the Resource Conservation and Recovery Act, to the extent applicable. Contractor shall procure designated items containing the highest percentage of recovered materials practicable, consistent with competition and performance requirements, when the purchase price exceeds the applicable threshold or the value of the quantity acquired during the preceding fiscal year exceeded the applicable threshold. Contractor shall also procure solid waste management services in a manner that maximizes energy and resource recovery and shall support the City's affirmative procurement program where applicable.

13. Domestic Preferences for Procurements

As appropriate and to the extent consistent with law, Contractor shall comply with 2 C.F.R. § 200.322 by providing a preference for the purchase, acquisition, or use of goods, products, or materials produced in the United States, including iron, aluminum, steel, cement, and other manufactured products, when the Work is performed under a federal award.

14. Prohibition on Certain Telecommunications and Video Surveillance Equipment or Services

Contractor shall comply with 2 C.F.R. § 200.216 and shall not obligate or expend federal funds to procure, obtain, extend, renew, or enter into a contract to procure or obtain covered telecommunications equipment or services as a substantial or essential component of any system or as critical technology as part of any system. Contractor shall include this prohibition in applicable subcontracts and purchase orders.

15. Build America, Buy America

If the Work is an infrastructure project funded by a federal financial assistance program subject to the Build America, Buy America Act, Contractor shall comply with all applicable domestic content procurement preference requirements for iron, steel, manufactured products, and construction materials permanently incorporated into the project, unless a waiver applies. Contractor shall provide certifications, documentation, and product information required by the City, funding agency, or pass-through entity.

16. Small and Minority Businesses, Women's Business Enterprises, Veteran-Owned Businesses,

RESERVED

and Labor Surplus Area Firms

Contractor shall take the affirmative steps required by 2 C.F.R. § 200.321 to assure that small businesses, minority businesses, women's business enterprises, veteran-owned businesses, and labor surplus area firms are used when possible, including, as applicable, placing such businesses on solicitation lists, soliciting them when they are potential sources, dividing requirements when economically feasible, establishing delivery schedules that encourage participation, using appropriate assistance organizations, and requiring subcontractors to take the same affirmative steps.

17. Bonding Requirements for Federal Construction or Facility Improvement Contracts

For construction or facility improvement contracts or subcontracts exceeding the simplified acquisition threshold, Contractor shall comply with the bonding requirements in 2 C.F.R. § 200.326 when the federal award requires such bonding, including bid guarantee, performance bond, and payment bond requirements unless the federal agency or pass-through entity determines that the City's bonding policy and requirements adequately protect the federal interest.

18. Access to Records; Retention

Contractor shall provide the City, the federal awarding agency, the pass-through entity, the Comptroller General of the United States, and their authorized representatives access to any documents, papers, records, and other materials that are directly pertinent to the federal or grant-funded Work for the purpose of making audits, examinations, excerpts, and transcriptions. Contractor shall retain records for the period required by 2 C.F.R. Part 200, the award terms, the Agreement, and applicable law, whichever is longer.

19. No Obligation by Federal Government

The federal government is not a party to this Agreement or any Task Order and is not subject to any obligations or liabilities to the City, Contractor, or any other party arising from the Agreement or Work.

20. Program Fraud and False or Fraudulent Statements

Contractor acknowledges that 31 U.S.C. Chapter 38 and other federal laws concerning fraud, false claims, and false statements may apply to Contractor's actions pertaining to federally funded or grant-funded Work. Contractor shall not submit false, fictitious, fraudulent, or misleading claims, certifications, invoices, records, or statements.

21. Additional Award-Specific Terms

If the federal awarding agency, pass-through entity, grant agreement, disaster assistance program, or other funding source requires additional clauses, certifications, forms, reporting, wage determinations, environmental/historic preservation conditions, civil rights provisions, procurement certifications, or other requirements, such requirements are incorporated into the affected Task Order upon written notice by the City. Contractor shall execute additional documents reasonably required by the City to document compliance.

RESERVED

CITY COMMISSION MEETING
CITY OF ST. PETE BEACH
COMMISSION CHAMBERS

Agenda Report

Agenda Title Name: Authorize the City Manager to execute the Agreement with PCS Civil, LLC for Civil On-Call Construction Services on an as-needed basis in an amount not to exceed annually appropriated funding.

Action Request: Motion to authorize the City Manager to execute the Agreement with PCS Civil, LLC for Civil On-Call Construction Services on an as-needed basis in an amount not to exceed annually appropriated funding.

Strategic Objective: Reliable Infrastructure

Date: June 23, 2026

Prepared By: Camden Mills, Public Services Director

Through: Frances Robustelli, City Manager

Summary of Issue: The City publicly advertised a Request for Proposals (RFP) for a task work order-driven Civil On-Call Construction Services contract. Five (5) responsive proposals were received on March 18, 2026. Following evaluation, the City's selection committee recommended award to Ajax Paving Industries of Florida LLC, BCS Construction Group Cathcart Construction Company Florida LLC, PCS Civil LLC, and Southern Road and Bridge LLC

- Qualifications and Experience
- References and Past Performance
- Capacity to Perform the Work
- Cost

The contract provides not-to-exceed unit prices for labor, materials, equipment, tools, transportation, and incidentals necessary to perform civil construction services on an as-needed basis throughout the City. Projects may include roadway and intersection improvements, drainage upgrades, ADA improvements, sidewalk construction, alley improvements, signing and pavement markings, recreational trails, traffic signal improvements, and intelligent transportation system (ITS) infrastructure.

Work will be authorized by task order on an as-needed basis in an amount not to exceed annually appropriated funding. The initial contract term is three (3) years with the option for two (2) additional one (1) year renewals upon mutual agreement and annual appropriation of funds.

Approval of this agreement will provide the City with qualified contractors to perform civil infrastructure improvements in a timely and cost-effective manner, improve responsiveness to maintenance and capital project needs, and support implementation of the City's transportation, drainage, utility, and public infrastructure programs.

Funding:

301.5410.563000 Improvements Other Than Buildings (remaining balance $211,746.90)

301.5411.563000 Improvements Other Than Buildings (remaining balance $8,478,760.96)

301.5726.563000 Improvements Other Than Buildings (remaining balance $825,791.26)

Other CIP funding sources may be used based on the available annual budget

Attachments:

1. PCS CIVIL Contract Signed

CITY OF ST. PETE BEACH, FLORIDA
SERVICES AGREEMENT

Civil On-Call Construction Services

This is an Agreement (the "Agreement") entered into by and between the **CITY OF ST. PETE BEACH** (hereinafter "City") and **PCS CIVIL, LLC** (hereinafter "Contractor"). The City and Contractor together shall be referred to as the "parties."

WHEREAS, The City properly issued a Request for Bids, attached and incorporated hereto as Exhibit "B" and the City Commission authorized the selection of Contractor at its 06/23/2026, public hearing.

WHEREAS, City desires to purchase from Contractor the services described in this Agreement.

WHEREAS, Contractor is in the business of providing the services described herein, and has submitted an appropriate proposal to the City to provide the same.

WHEREAS, this Agreement has been properly approved by the appropriate authority of the City and the Contractor.

NOW, THEREFORE, upon the mutual covenants contained herein, and other good and valuable considerations, the sufficiency of which is hereby acknowledged, the parties hereto hereby agree to the following:

1. Recitals. The foregoing recitals are true and correct and incorporated herein by reference.

2. Standard Contract Addendum. The attached Standard Contract Addendum, which contains all the Florida Statutorily required provisions applicable to this Agreement, is attached hereto as Exhibit "A" and its provisions modify and supplement this Agreement.

3. Scope of Services. The Contractor must perform all work for the City required by the contract documents as set forth below:

a. Contractor will furnish all labor, materials, and equipment necessary as indicated in the Request for Bids (Exhibit "B") in the amount of Not To Exceed the Annual Budgeted amount. Funding will be awarded by Task Orders.

b. Contractor must supervise the workforce to ensure that all workers conduct themselves and perform their work in a safe and professional manner. Contractor must comply with all OSHA safety rules and regulations in the operation of equipment and in the performance of the work. Contractor must at all times have a competent field supervisor on the job site to enforce these policies and procedures at the Contractor's expense.

c. Contractor will provide the City with seventy-two (72) hours written notice prior to the beginning of work under this Agreement and prior to any schedule change with the exception of changes caused by inclement weather.

d. Contractor must comply with any and all Federal, State, and local laws and regulations

now in effect, or hereinafter enacted during the term of this Agreement, which are applicable to the Contractor, its employees, agents or subcontractors, if any, with respect to the work and services described herein. The Contractor further warrants that there has been no violation of copyrights or patent rights either in the United States of America or in foreign countries in connection with the work of the contract.

e. Contractor warrants to the City that all goods and materials furnished under the contract will be new unless otherwise specified and that contractor possesses good, clear, and marketable title to said goods and there are no pending liens, claims, or encumbrances whatsoever against said goods. All work not conforming to these requirements, including substitutions not properly approved and authorized may be considered defective. Contractor further warrants that all goods, materials and workmanship furnished, whether furnished by the Contractor or its subcontractors and suppliers, will comply with the specifications, drawings and other descriptions supplied or adopted. Last, Contractor warrants all material and workmanship for a minimum of (1) year from date of project completion and acceptancy by the City. If within one (1) year after acceptance by the City, or within such larger period of time as may be prescribed by law any of the work is found to be defective or not in accordance with the contract documents, the Contractor will, after receipt of a written notice from the City to do so, promptly correct the work.

4. Damages. Time is of the essence in the performance of this Agreement. City shall be entitled to liquidated damages in the amount of $500 per day, for each day after the date set forth in paragraph 10, that Contractor has failed to properly and completely deliver all goods or provide all service specified herein. The Contractor specifically acknowledges that the foregoing sum is reasonable and does not constitute a penalty.

5. Remedies.

   a. Damages. The City reserves the right to recover any ascertainable actual damages incurred as a result of the failure of the Contractor to perform in accordance with the requirements of this Agreement, or for losses sustained by the city resultant from the Contractor's failure to perform in accordance with the requirements of this Agreement.

   b. Correction of Work. If, in the judgment of the City, work provided by the Contractor does not conform to the requirements of this Agreement, or if the work exhibits poor workmanship, the city reserves the right to require that the Contractor correct all deficiencies in the work to bring the work into conformance without additional cost to the City, and/or replace any personnel who fail to perform in accordance with the requirements of this Agreement. The City is the sole judge of non-conformance and the quality of workmanship.

6. Waiver of Liens. Prior to final payment of the Contract Sum, a final waiver of lien must be submitted by all suppliers, subcontractors, and/or Contractors who worked on the project that is the subject of this Agreement.

7. Warranties.
   a. Warranty of Title. Contractor warrants to the City that all goods and materials furnished

under the contract will be new unless otherwise specified and that Contractor possesses good, clear, and marketable title to said goods and there are no pending liens, claims, or encumbrances whatsoever against said goods. All work not conforming to these requirements, including substitutions not properly approved and authorized may be considered defective.

b. Warranty of Specifications. The Contractor warrants that all goods, materials, workmanship furnished, whether by the Contractor or its subcontractors and suppliers, will comply with the specifications, drawings and other descriptions supplied or adopted.

c. Warranty of Merchantability. The Contractor warrants all material and workmanship for a minimum of one (1) year from date of project completion and acceptance by the City. If within one (1) year after acceptance by the city, or within such larger period of time as may be described by law any of the work is found to be defective or not in accordance with the contract documents, the Contractor must after receipt of a written notice from the City to do so, promptly correct the work unless the City has previously given the Contractor a written acceptance of such condition.

8. Term. This Agreement will remain in effect for a period of (3) three years with (2) two, (1) one-year extensions from the Effective Date.

9. Effective date. The "Effective Date" of this Agreement shall be the date this Agreement has been executed by all parties.

10. Termination. This Agreement may be canceled by the City when:
   a. Sufficient funds are not available to continue its full and faithful performance to the Agreement.
   b. Sub-standard or non-performance of Agreement.
   c. The City wishes to terminate the Agreement at any time and for any reason, upon giving thirty (30) days prior written notice to the Contractor.

11. Fiscal Non-funding. If funds for the requested services described herein are not appropriated via the annual budget adoption process, the City reserves the right to cancel the Agreement immediately upon written notice to the Contractor.

12. Non-Exclusivity. Contractor acknowledges that the City may enter into agreements with other consultants or may have its own employees complete the work for services similar to the services that are subject to this Agreement.

13. Compensation. Upon Contractor's satisfactory full performance of the services or in accordance with the payment schedule provided in the attached proposal, City shall pay Contractor, as full consideration for services provided in this Agreement.

14. Insurance. To the extent that this Agreement requires Contractor to provide any services of any kind, Contractor and all of Contractor's subcontractors shall maintain public liability insurance in a combined single limit for bodily injury and property damage in the amount of not less than $1,000,000.00, satisfactory to the City Manager, naming the City as an additionally named insured and providing coverage up through and including the final performance of any services provided

herein. Contractor and all of Contractor's subcontractors shall maintain in full force and effect a policy of worker's compensation insurance for all of Contractor's employees in accordance with applicable state and federal law. Said insurance coverage shall include employer's liability with a single limit of $100,000.00 per accident or occurrence. Contractor shall present City with a certificate for all the foregoing insurance, at the time of executing this Agreement and at such other times requested by the City.

The Contractor waives all rights against the City, its consultants, separate contractors, if any, and any of its subcontractors, agents and employees, for any and all damages caused to the extent covered by insurance described herein and obtained pursuant to this Section or other property insurance applicable to the services and product provided under this Agreement. The City shall require of the Contractor, Contractor's consultants, separate contractors, if any, and the subcontractors, sub-subcontractors, agents and employees of any of them, by appropriate agreements, written where legally required for validity, similar waivers each in favor of other parties enumerated herein. The policies shall provide such waiver of subrogation by endorsement otherwise. A waiver of subrogation shall be effective as to a person or entity even though that person or entity would otherwise have a duty of indemnification, contractual or otherwise, did not pay the insurance premium directly or indirectly, and whether or not the person or entity had an insurable interest in the property damaged.

15. Indemnification. In consideration of the payment of ten dollars as part of the compensation described herein, such sum being specifically found by Contractor to be sufficient consideration for this indemnification, Contractor shall indemnify, defend and hold the City harmless for itself, its past/present/future elected and appointed officials, its employees, agents and assigns, from and against any and all losses, claims, damages, suits, actions, liability or demands, including attorneys' fees and costs of litigation through all appellate proceedings, arising from the performance or non-performance of this Agreement, whether caused in part by the City or not, and in connection with violations of copyrighted or trademarked materials used by Contractor, loss of life, bodily or personal injury, or property damage, including loss of use thereof, directly or indirectly caused by, resulting from, arising out of or occurring in connection with the operations of the Contractor or its officers, employees, agents, subcontractors, or independent Contractors, excepting only such loss of life, bodily or personal injury, or property damage solely attributable to the gross negligence or willful misconduct of the City or its elected or appointed officials and employees. In any and all claims against the City, or any of their agents or employees by any employee of the Contractor any subcontractor, anyone directly or indirectly employed by any of them or anyone for whose acts any of them may be liable, the indemnification obligation under this paragraph is not limited in any way by any limitation in this amount or type of damages compensation or benefits payable by or for the Contractor or any subcontractor under Workers' Compensation Acts, Disability Benefit Acts or other Employee Benefit Acts. Nothing contained herein is intended nor may it be construed, to waive City's rights and immunities under the common law or Section 768.28, Florida Statutes, as amended from time to time; nor will anything included herein be construed as consent to be sued by any third parties in any matter arising out of this Agreement. To the extent considered necessary by the Contract Administrator and the City Attorney, any sums due Contractor under this Agreement may be retained by the City until all of the City's claims subject to this indemnification obligation have been settled or otherwise resolved, and any amount withheld is not subject to payment of interest by the City. The above provisions

will survive the termination or expiration of this Agreement and will pertain to any occurrence during the term of this Agreement, even though the claim may be made after the termination or expiration hereof.

16. Discriminatory Vendor List. Contractor hereby acknowledges its continuous duty to disclose to the City if the Contractor or any of its affiliates, as defined by Section 287.134 (1)(a), Florida Statutes, are placed on the Discriminatory Vendor List. Pursuant to Section 287-134 (2)(a), Florida Statutes: "An entity or affiliate who has been placed on the discriminatory vendor list may not submit a bid, proposal, or reply on a contract to a public entity; may not submit a bid or proposal, or reply on a contract with a public entity for the construction or repair of a public building or public work; may not submit bids, proposals, or replies on leases of real property to a public entity; may not be awarded or perform work as a contractor, supplier, subcontractor, or consultant under a contract with any public entity; and may not transact business with any public entity."

17. Independent Contractor. This Agreement does not create an employee/employer relationship between the parties. It is the intent of the parties that the Contractor is an independent contractor under this Agreement and not the City's employee for any purposes, including but not limited to, the application of the Fair Labor Standards Act minimum wage and overtime payments, Federal Insurance Contribution Act, the Social Security Act, the Federal Unemployment Tax Act, the provisions of the Internal Revenue Code, the State Worker's Compensation Act, and the State Unemployment Insurance law. The Contractor will retain sole and absolute discretion in the judgment of the manner and means of carrying out Contractor's activities and responsibilities hereunder provided, further that administrative procedures applicable to services rendered under this Agreement will be those of Contractor, which policies of Contractor will not conflict with City, State, or United States policies, rules, or regulations relating to the use of Contractor's funds provided for herein. The contractor agrees that it is a separate and independent enterprise from the City, that it had full opportunity to find other business, that it has made its own investment in it business, and that it will utilize a high level of skill necessary to perform the work. This Agreement must not be construed as creating any joint employment relationship between the Contractor and the City and the City will not be liable for any obligation incurred by Contractor, including but not limited to unpaid minimum wages and/or overtime premiums.

18. Audit Rights. The City reserves the right to audit the records of the Contractor for the commodities and/or serves provided under the contract at any time during the performance and term of the contract and for a period of five (5) years after completion and acceptance by the City. If required by the City, the Contractor agrees to submit to an audit by an independent certified public accountant selected by the City. The Contractor must allow the City to inspect, examine and review the records of the Contractor in relation to this Agreement at any an all times during normal business hours during the term of the Agreement.

19. Exhibits. The following Exhibits shall be attached, incorporated, and made a part of this Agreement:
    a. Standard Contract Addendum (Exhibit "A")
    b. Request for Bid/Proposal (Exhibit "B")
    c. Vendor Bid/Proposal (Exhibit "C")

d. Conditional Federal/Grant-Funded Contract Addendum (Exhibit "D")

20. Notices. All notices sent pursuant to this Agreement shall be given in writing via certified mail or overnight courier and shall be delivered to the following addresses:

As to Contractor:
PCS Civil, LLC
6920 Asphalt Avenue
Tampa, FL 33614

As to City:
City Manager
City of St. Pete Beach
155 Corey Avenue
St. Pete Beach, FL 33706

With Copy To:
terryannm@pcscivilinc.com

With Copy To:
attorney@stpetebeach.org

21. Conflicts and Severability. To the extent that any terms in the attached proposal conflict with the terms of this Agreement, the terms of this Agreement shall control and supersede such conflicting terms in the attached proposal, to the extent of such conflict. If any section, part of section, paragraph, clause, phrase, or word of this Agreement is declared invalid, the remaining provisions of this Agreement shall not be affected.

22. Amendments. This document and exhibits embody the entire Agreement of the parties. There are no promises, terms, conditions, or representations binding on either party hereto, other than those contained herein; and this document shall supersede all previous communications, representations, and/or agreements between the parties hereto, whether written or oral. This Agreement shall not be modified by any oral statement, communication, Agreement, course of conduct, or by anything other than a writing signed by the parties. This Agreement may be amended or modified only in writing signed by all parties hereto.

23. Jurisdiction, Venue, Attorney Fees. This Agreement shall be governed and construed according to the laws of Florida, and venue for any action arising herefrom shall be in Pinellas County, Florida. The prevailing party in any action to enforce or interpret this Agreement shall be entitled to reasonable attorney's fees incurred through all appellate proceedings.

24. Assignment. This Agreement shall be binding upon the parties, their successors, assigns, and legal representatives. Contractor shall not assign or otherwise transfer any of the rights or duties under this Agreement, without the express written consent of the City.

25. Counterparts. This Agreement may be executed and delivered in any number of counterparts, each of which so executed and delivered shall be deemed to be an original and all of which shall constitute one and the same instrument. Facsimile, documents executed, scanned and transmitted electronically and electronic signatures shall be deemed original signatures for purposes of this Agreement and all matters related thereto, with such facsimile, scanned and electronic signatures having the same legal effect as original signatures.

26. Authority. Contractor hereby acknowledges that the person executing this Agreement on behalf of Contractor has the full authority to do so and to bind Contractor to the terms hereof.

IN WITNESS WHEREOF, the Parties have executed this Agreement on the day and year set forth below.

Under penalties of perjury, and pursuant to Sec. 92.525, Fla. Stat., Contractor declares that Contractor has read the Section 15 of the Standard Contract Addendum, Exhibit "A", and that the facts stated in it are true.

PCS Civil, LLC

Signature: _____

By: ~~Douglas J Ebbers~~ ~~Jeff~~ Jeff Sejgny

Its: ~~President~~ Vice President

Date: 6.10.2026

City of St. Pete Beach:

Signature: _____

By: Frances Robustelli

Its: City Manager

Date: _____

APPROVED AS TO FORM
AND LEGAL SUFFICIENCY:

_____
Ralf Brookes
City Attorney

ATTEST:

_____
Renee Rose
City Clerk

EXHIBIT "A"

Standard Contract Addendum

(Place Standard Contract Addendum behind this page)

CITY OF ST. PETE BEACH, FLORIDA
STANDARD CONTRACT ADDENDUM

THIS STANDARD CONTRACT ADDENDUM is made and entered into this _____ day of _____, 2026, by and between the CITY OF ST. PETE BEACH, a Florida municipality, hereinafter referred to as the "City", and _____, hereinafter referred to as "Contractor", concerning that certain agreement dated the ____ day of _____, 2026 ("Agreement") and titled _____.

WITNESSETH:

WHEREAS, Section 119.0701, Fla. Stat., requires that certain public agency contracts must include certain statutorily required provisions concerning the contractor's compliance for Florida's Public Records Act; and

WHEREAS, Section 768.28, Fla. Stat., sets forth certain mandatory limitations on indemnification and liability for Florida public agencies; and

WHEREAS, Florida law requires that public agency contracts be subject to non-appropriation and thereby contingent upon appropriation during the public agency's statutorily mandated annual budget approval process; and

WHEREAS, Section 448.095, Fla. Stat., imposes certain obligations on public agencies with regard to the use of the E-Verify system by their contractors and subcontractors; and

WHEREAS, Section 287.133 and 287.135, Fla. Stat., provides restrictions on local governments contracting with companies that are on certain Scrutinized Companies lists or convicted vendor list; and

WHEREAS, additional terms required by Sections 282.3185(5) and (6) Fla. Stat. related to data management and Section 287.05701 Fla. Stat. related to social government and corporate activism are also added by virtue of this Addendum; and

WHEREAS, Section 286.101, Florida Statutes contains a list of "foreign countries of concern" including, the People's Republic of China, the Russian Federation, the Islamic Republic of Iran, the Democratic People's Republic of Korea, the Republic of Cuba, the Venezuelan regime of Nicolás Maduro, or the Syrian Arab Republic, including any agency of or any other entity under significant control of such "foreign country of concern". Any entity that does business with a state agency or political subdivision must disclose certain of their dealings with those "foreign countries of concern" to the Florida Department of Financial Services; and

WHEREAS, Section 787.06(13), Fla. Stat. provides that when a contract is executed, renewed, or extended between a nongovernmental entity and a governmental entity, the nongovernmental entity must provide the governmental entity with an affidavit signed by an

officer or a representative of the nongovernmental entity under penalty of perjury attesting that the nongovernmental entity does not use coercion for labor or services as defined in such statute;

NOW, THEREFORE, in consideration of the covenants set forth herein, the parties agree to this addendum as follows:

1. Amendment. This Addendum hereby amends and supplements the terms of the Agreement. In the event of a conflict between the terms of the Agreement and terms of the Addendum, the terms of the Addendum shall prevail.

2. Public Records Compliance. Contractor agrees that, to the extent that it may "act on behalf" of the City within the meaning of Section 119.0701(1)(a), Florida Statutes in providing its services under this Agreement, it shall:

(a) Keep and maintain public records required by the public agency to perform the service.

(b) Upon request from the public agency's custodian of public records, provide the public agency with a copy of the requested records or allow the records to be inspected or copied within a reasonable time at a cost that does not exceed the cost provided in this chapter or as otherwise provided by law.

(c) Ensure that public records that are exempt or confidential and exempt from public records disclosure requirements are not disclosed except as authorized by law for the duration of the contract term and following completion of the contract if the contractor does not transfer the records to the public agency.

(d) Upon completion of the contract, transfer, at no cost, to the public agency all public records in possession of the contractor or keep and maintain public records required by the public agency to perform the service. If the contractor transfers all public records to the public agency upon completion of the contract, the contractor shall destroy any duplicate public records that are exempt or confidential and exempt from public records disclosure requirements. If the contractor keeps and maintains public records upon completion of the contract, the contractor shall meet all applicable requirements for retaining public records. All records stored electronically must be provided to the public agency, upon request from the City's custodian of public records, in a format that is compatible with the information technology systems of the City.

(e) Pursuant to Section 119.0701(2)(a), Fla. Stat., **IF THE CONTRACTOR HAS QUESTIONS REGARDING THE APPLICATION OF CHAPTER 119, FLORIDA STATUTES, TO THE CONTRACTOR'S DUTY TO PROVIDE PUBLIC RECORDS RELATING TO THIS AGREEMENT, CONTACT THE CUSTODIAN OF PUBLIC RECORDS AT:**

Renee Rose
City Clerk/Public Records Custodian
cityclerk@stpetebeach.org

Phone: 727-363-9220
155 Corey Avenue
St. Pete Beach, FL 33706
Fax: 727-541-8040

3. Public Records Compliance Indemnification. Contractor agrees to indemnify and hold the City harmless against any and all claims, damage awards, and causes of action arising from the contractor's failure to comply with the public records disclosure requirements of Section 119.07(1), Florida Statutes, or by contractor's failure to maintain public records that are exempt or confidential and exempt from the public records disclosure requirements, including, but not limited to, any third party claims or awards for attorneys' fees and costs arising therefrom. Contractor authorizes the public agency to seek declaratory, injunctive, or other appropriate relief against Contractor in Pinellas County Circuit Court on an expedited basis to enforce the requirements of this section.

4. Compliance/Consistency with Section 768.28, Fla. Stat. Any indemnification or agreement to defend or hold harmless by City specified in the Agreement shall not be construed as a waiver of City's sovereign immunity, and shall be limited to such indemnification and liability limits consistent with the requirements of Section 768.28, Fla. Stat. and subject to the procedural requirements set forth therein. Any other purported indemnification by City in the Agreement in derogation hereof shall be void and of no force or effect.

5. Non-appropriation. City's performance and obligation to pay under this Agreement is contingent upon an appropriation during the City's annual budget approval process. If funds are not appropriated for a fiscal year, then the Contractor shall be notified as soon as is practical by memorandum from the City Manager or designee that funds have not been appropriated for continuation of the Agreement, and the Agreement shall expire at the end of the fiscal year for which funding has been appropriated. The termination of the Agreement at fiscal year end shall be without penalty or expense to the City subject to the City paying all invoices for services rendered during the period the Agreement was funded by appropriations.

6. E-Verify Compliance. By entering into this Agreement, the Contractor is obligated to comply with the provisions of Section 448.095, Fla. Stat. "Employment Eligibility," as amended from time to time. This includes but is not limited to register with and use the E-Verify System to verify the work authorization status of all newly hired employees, and requiring all subcontractors to provide an affidavit to Contractor attesting that the subcontractor does not employ, contract with, or subcontract with, an unauthorized alien. Contractor agrees to maintain a copy of such affidavit for the duration of this Agreement. Failure to comply with this paragraph will result in the termination of this Agreement as provided in Section 448.095, Fla. Stat., as amended and Contractor will not be awarded a public contract for at least one (1) year after the date on which the Agreement was terminated. Contractor will also be liable for any additional costs to the City as a result of the termination of this Agreement in accordance with this paragraph. Contractor affirmatively states, under penalty of perjury, that in accordance with Section 448.095, Fla. Stat., Contractor is registered with and uses the E-Verify system to verify the work authorization status of all newly hired employees, that in accordance with such statute, Contractor requires from each of its subcontractors an affidavit stating that the subcontractor does not employ, contract with, or

subcontract with an unauthorized alien, and that Contractor is otherwise in compliance with Sections 448.09 and 448.095, Fla. Stat.

7. Compliance/Consistency with Scrutinized Companies Provisions of Florida Statutes. Section 287.135(2)(a), Fla. Stat., prohibits a company from bidding on, submitting a proposal for, or entering into or renewing a contract for goods or services of any amount if, at the time of contracting or renewal, the company is on the Scrutinized Companies that Boycott Israel List, created pursuant to Section 215.4725, Fla. Stat., or is engaged in a boycott of Israel. Section 287.135(2)(b), Fla. Stat., further prohibits a company from bidding on, submitting a proposal for, or entering into or renewing a contract for goods or services over one million dollars ($1,000,000) if, at the time of contracting or renewal, the company is on either the Scrutinized Companies with Activities in Sudan List or the Scrutinized Companies with Activities in the Iran Petroleum Energy Sector List, both created pursuant to section 215.473, Fla. Stat., or the company is engaged in business operations in Cuba or Syria. Contractor hereby certifies that Contractor is not listed on any of the following: (i) the Scrutinized Companies that Boycott Israel List, (ii) Scrutinized Companies with Activities in Sudan List, or (iii) the Scrutinized Companies with Activities in the Iran Petroleum Energy Sector List. Contractor further hereby certifies that Contractor is not engaged in a boycott of Israel or engaged in business operations in Cuba or Syria. Contractor understands that pursuant to section 287.135, Fla. Stat., the submission of a false certification may subject Contractor to civil penalties, attorney's fees, and/or costs. Contractor further understands that any contract with City for goods or services of any amount may be terminated at the option of City if Contractor (i) is found to have submitted a false certification, (ii) has been placed on the Scrutinized Companies that Boycott Israel List, or (iii) is engaged in a boycott of Israel. And, in addition to the foregoing, if the amount of the contract is one million dollars ($1,000,000) or more, the contract may be terminated at the option of City if the company is found to have submitted a false certification, has been placed on the Scrutinized Companies with Activities in Sudan List or the Scrutinized Companies with Activities in the Iran Petroleum Energy Sector List, or has been engaged in business operations in Cuba or Syria.

8. Disclosure Requirements for "Foreign Countries of Concern". CONTRACTOR shall comply with the disclosure requirements set forth is Section 286.101 (3) (a), Fla. Stat., which requires "Any entity that applies to a state agency or political subdivision for a grant or proposes having a contract value of $100,000 or more shall disclose to the state agency or political subdivision any current or prior interest of, any contract with, or any grant or gift received from a "foreign country of concern" if such interest, contract, grant or gift received from a "foreign country of concern" if such interest, contract, grant or gift has a value of $50,000 or more and such interest existed at any time or such contract, grant or gift was received or in force at any time during the previous five (5) years. Such disclosure shall contain the name and mailing address of the disclosing entity, the amount of the gift or the value of the interest disclosed, the applicable "foreign country of concern" and, if applicable the date of termination of the contract or interest, the date of receipt of the grant or gift and the name of the agent or controlled entity that is the source or interest holder. Within one (1) year before applying for any grant or proposing any contract, such entity must provide a copy of such disclosure to the Department of Financial Services". Pursuant to Section 286.101(7), Fla. Stat.: "In addition to any fine assessed under [section 286.101(7)(a), F.S.], a final order determining a third or subsequent violation by an entity other than a state agency or political subdivision shall automatically disqualify the entity from

eligibility for any grant or contract funded by a state agency or any political subdivision until such ineligibility is lifted by the Administration Commission for good cause."

9. Venue and Jurisdiction. Notwithstanding any of other provision to the contrary, this Agreement and the parties' actions under this Agreement shall be governed by and construed under the laws of the State of Florida, without reference to conflict of law principles. As a material condition of this Agreement, each Party hereby irrevocably and unconditionally: i) consents to submit and does submit to the jurisdiction of the Circuit Court in and for Pinellas County, Florida for any actions, suits or proceedings arising out of or relating to this Agreement. Both parties waive any right to file an action, suit or proceeding in Federal Court or remove any action, suit or proceeding to Federal Court.

10. Attorneys' Fees and Costs. Notwithstanding any of other provision to the contrary, if litigation ensues regarding this Agreement, each party hereto shall bear its own attorneys' fee and costs.

11. Public Entities Crime or Convicted Vendor List. Contractor agrees and assumes a continuous duty to disclose to the City if the Contractor or any of its affiliates as defined by Section 287.133(1)(a), Florida Statutes are placed on the Convicted Vendor List or the Antitrust Violator Vendor List maintained by the Florida Department of Management Services.

12. Data Management; Notice of Breach. Contractor shall cooperate with the City and provide timely incident reporting, response activities/fact gathering, public and agency notification, severity level assessment, after-action reports, etc., which the City must report in accordance with Sections 282.3185(5) & (6), Florida Statutes in the event of a data breach.

13. Environmental and Social Government and Corporate Activism. The City has not given preference or requested documentation from the Contractor based on Contractor's social, political or ideological interest. Contractor agrees to similarly not request documentation or give preference to any subcontractor based on the subcontractor's social, political or ideological interests.

14. Taxes. The City shall not be liable for any taxes and assessments imposed by a federal, state or local governmental agency to the extent that the City is exempt from same by Florida law, including but not limited to any sales or use tax.

15. No coercion for labor or services. The Contractor swears under penalty of perjury that the Contractor does not use coercion for labor or services as defined as follows:

"Coercion" means:

1. Using or threatening to use physical force against any person;
2. Restraining, isolating, or confining or threatening to restrain, isolate, or confine any person without lawful authority and against her or his will;
3. Using lending or other credit methods to establish a debt by any person when labor or services are pledged as a security for the debt, if the value of the labor or services as reasonably assessed is not applied toward the liquidation of the debt, the length and nature of the labor or services are not respectively limited and defined;

4. Destroying, concealing, removing, confiscating, withholding, or possessing any actual or purported passport, visa, or other immigration document, or any other actual or purported government identification document, of any person;

5. Causing or threatening to cause financial harm to any person;

6. Enticing or luring any person by fraud or deceit; or

7. Providing a controlled substance as outlined in Schedule I or Schedule II of Sec. 893.03, Fla. Stat. to any person for the purpose of exploitation of that person.

16. Force Majeure. The City reserves the right to suspend, modify or terminate this contract in the event of an act of god or act of man beyond the control of the parties, including but not limited to a hurricane, tropical storm, tornado, or other destructive weather event, flooding, pandemic, plague, war, armed conflict, domestic or foreign terrorism, riot, labor condition, state or federal governmental action, and catastrophic Internet disturbance, making performance inadvisable, economically impracticable, illegal, or impossible.

17. Additional Terms. Notwithstanding any of other provision to the contrary, the parties agree as follows:

A. None.

IN WITNESS WHEREOF, the parties hereto have executed and delivered this instrument on the days and year indicated below and the signatories below to bind the parties set forth herein.

Under penalties of perjury, and pursuant to Sec. 92.525, Fla. Stat., Contractor declares that Contractor has read the foregoing Section 15 above and that the facts stated in it are true.

Contractor:

_____

Print Name: Jeff Sevigny

Title: Vice President

Company: PLS Civil LLC

ATTEST:

_____

Renee Rose, City Clerk

City of St. Pete Beach:

_____

Frances Robustelli, City Manager

EXHIBIT "B"

Request for Bid/Proposal

(Place Request for Bid/Proposal behind this page)

City of St Pete Beach
Request for Proposal

Civil On Call Construction Services

Timeline	Date	Time
Publication of Bid	03/11/2026	8:00 AM
Pre-Bid Meeting	03/18/2026	10:00 AM
Deadline for Question Submission	03/25/2026	10:00 AM
Submittal Deadline electronically via Bonfire	04/08/2026	9:00 AM
Submittal Opening	04/08/2026	11:00 AM

Submittals are due on or before
04/08/2026 at 9:00 AM EST
Electronically Via Bonfire Only

TABLE OF CONTENTS

I. INVITATION 3
II. STATEMENT OF WORK 4
III. BID FORM 26
IV. GENERAL CONTRACT TERMS 27
V. REFERENCES & MINIMUM QUALIFICATIONS 38
VI. CONTRACTOR'S PROPOSAL SUBMITTAL 39
VII. PUBLIC ENTITY CRIMINAL AFFIDAVIT 40
VIII. NON-COLLUSION AFFADAVIT 42

I. INVITATION

The City of St Pete Beach has issued this Request for Proposal (RFP) to solicit competitive bids and proposals from Proposers for a Task Work Order driven Civil On-Call Construction Services Contract. The successful bidder shall provide all labor, materials, equipment, tools, consumables, transportation, and incidentals to provide Public Services capital improvement projects construction services on an 'as needed' basis for the City of St Pete Beach.

The types of projects that may be assigned under this Contract shall include, but not be limited to:

- intersection/roadway improvements
- drainage upgrades and/or installations
- ADA upgrades and pedestrian/bicyclist improvements
- sidewalk installations and upgrades
- alley improvements
- median modifications
- signing and pavement markings
- recreational trails
- signal upgrades and installations
- intelligent transportation systems (ITS) components upgrades

CONTACT INFORMATION
Procurement Manager – Sara Spain
Email – purchasing@stpetebeach.org

II. STATEMENT OF WORK

PART I: GENERAL REQUIREMENTS

1. SPECIAL CONDITIONS

A. **Local Preference, Location Points and Tie Breakers**

Location preferences do not apply due to the fact that some task orders may be funded with state or federal dollars.

B. **Minority Business Enterprise Policy**

Minority Business Enterprise Evaluation Criteria do not apply due to the fact that some task orders may be funded with state or federal dollars.

C. **Scrutinized Companies**

Scrutinized Companies with activities in Sudan List or activities in the Iran Petroleum Energy Sector List do not apply due to the fact that some task orders may be funded with state or federal dollars.

D. **Bonding and Credit**

Contractor/Vendor shall provide a letter of bondability showing their maximum bonding capacity.

E. **Contract Term**

This will be a three (3) year initial contract with the option to be extended for two (2) additional one (1) year periods upon mutual consent of both parties. It is the intent of the City of St Pete Beach to award these services to more than one Contractor/Vendor.

F. **Contract Pricing**

Contract prices for equipment and/or service will remain firm through the first three (3) contract years. Sixty (60) days prior to the contract renewal date, Contractor/Vendor may request a price adjustment. The price adjustment and justification must be submitted in writing, and be approved by the City. Said price increase may not, under any circumstances, exceed three (3) percent of the Construction CPI. No retroactive contract price adjustments will be allowed. If the Contractor/Vendor fails to submit a price adjustment within the sixty (60) days prior to the contract renewal date, current contract pricing will continue for the contract renewal period.

G. **Work Assignments**

All work to be performed shall take the following into consideration prior to assignment of any work to any Contractor/Vendor, at the discretion of the Procurement Manager:

1. **Estimated Cost < $250,000.00:**

The City retains the right to select any Contractor/Vendor to whom a multiple-award contract has been made when the opportunity to submit a quote for any job whose estimated cost is less than Two Hundred & Fifty Thousand Dollars ($250,000.00).

2. **Estimated Cost > $250,000.00 and < $500,000.00:**

The City shall obtain three (3) quotes from any Contractor/Vendor to whom a multiple vendor award has been made, for those jobs whose estimated cost is greater than Two Hundred & Fifty Thousand Dollars ($250,000.00) and less than Five Hundred Thousand Dollars ($500,000.00).

3. **Estimated Cost > $500,000.00:**
   a. The City retains the right to separately and competitively bid any and all projects whose cost estimates are greater than Five Hundred Thousand Dollars ($500,000.00). The determination will be made by the City Procurement Manager.
   b. Projects that exceed Five Hundred Thousand Dollars ($500,000.00) may not be sub-divided into separate projects in order to circumvent such requirement.

4. **Reassignment of Work:**

The City retains the right and authority to reassign work to another Contractor/Vendor, at any time, for the following reasons:

a. The lowest Contractor/Vendor cannot comply with the specifications in cases of an emergency.
b. The lowest Contractor/Vendor cannot respond to the job requirements, at the time, due to scheduling conflicts, staffing considerations or other reasonable cause(s) for preventing their completion of the task as required.
c. The City shall have the option to solicit additional quotes, bids, or even professional opinion about a particular job when in its best interest and could engage the services of another company/Contractor/Vendor. This exception will always require advanced written notice and explanation by the requesting City Department to the Procurement Manager, for approval, before authorizing any contemplated work to be done. The receipt of the approved purchase order shall be understood that all work is to immediately begin on the project, per the project schedule and needs as identified by the City and as agreed upon by the Contractor/Vendor.

5. **Cumulative Work shall not exceed $4,000,000.00:**

The cost of all work completed by a Contractor/Vendor shall not exceed Four Million Dollars ($4,000,000.00) in a calendar year. If all costs are expected to exceed this threshold, these services will need to be separately re-bid through issuance of a new set of bid specifications.

H. **Quotes**

1. The City will request a quote if and when needed. Vendors participating in the contract shall have ten (10) business days from written notification to respond to quotes, unless waived by the Procurement Manager. If work is an emergency, as determined by the City, vendors shall have (24) hours from email or phone notification to respond to quotes.
2. A Task Order Form will be provided to awarded Contractor/Vendor. A properly executed Purchase Order shall be issued for the work assignment and shall have the Task Order Form and all related paperwork attached as backup. The Purchase Order shall indicate the start and end dates for the project.
3. If the Contractor/Vendor does not wish to issue a quote for or cannot meet the requirements of the project, inclusive of the time given in which to complete the job; the Contractor/Vendor shall complete the Work Order Form by noting "No Quote" on the form itself and by also providing an explanation as to why they are not submitting a quote.
4. Final costs for any individual project shall not exceed the original approved and total cost for such project by more than ten percent (10%). Any and all anticipated project cost increases are subject to advanced approval by the Procurement Manager.
5. Any Contractor/Vendor that fails to submit a quote successively three (3) times in a row may have their contract cancelled due to non-performance.

I. **Notice to Proceed (NTP)**

All task orders $250,000.00 or less will use the purchase order as the Notice to Proceed (NTP). The start date and date or the number of day to complete the project must be included on the purchase order. If the start date is left off the purchase order then the date of the purchase order approval will default as the NTP start date. Projects over $250,000.00 will have a formal NTP issued through the Purchasing Division. All task orders must be reviewed by the Purchasing Division before a purchase order or NTP is issued.

J. **Liquidated Damages**

Liquidated damages will be assessed to the Contractor/Vendor/vendor for each consecutive calendar day completion of the project or work is delayed. The amount of liquidated damages will be dependent on the cost of the task order and will be calculated using the chart below.

Estimated Project Cost Over	Estimated Project Cost But Less than	Daily Charge Per Calendar Day
$0.00	$50,000.00	$960.00
$50,000.00	$250,000.00	$965.00
$250,000.00	$500,000.00	$1,245.00
$500,000.00	$2,500,000.00	$1,665.00
$2,500,000.00	$5,000,000.00	$2,715.00

K. **Project Spreadsheet Submittal**

Contractor/Vendor must submit a formal spreadsheet using the process below.

1. List of completed projects to include:
   a. Relevant project experience includes construction and delivery methods relevant to the type of project to be constructed utilizing the CM/GC method (or performing as a General Contractor/Vendor on similar types and sizes of projects).
   b. Describe no more than ten (10) and no less than five (5) projects in order of most relevant to least relevant (similar type of construction with a contract dollar amount of $500,000.00 or less) which demonstrates the firm's capabilities to perform such projects.
   c. For each project, the following information should be provided:
      i. Project name
      ii. Project location
      iii. Dates during which services were performed
      iv. Physical description (e.g. square footage, key components, site area)
      v. Brief description of Project Services performed by CM/GC or GC Firm.
      vi. Owners Information:
         a. Contact person
         b. Telephone number
         c. Email
         d. Project name
         e. Owner reference
         f. Original Contract Price
      vii. Amount of Change Orders by:
         a. Your Company
         b. Consultant
         c. Client/Entity
      viii. Final Project Price
      ix. Proposer should include a table with this information layout as follows:

Entity Name and Project Name	Contact Person Phone Email	Begin Project Amount	Change Orders by CMR	Change Orders by Engineer	Change Orders by Entity	Final Cost of Projects	Original Days for Construction	Final Construction Days

2. Any outstanding accomplishments of the firm that relates to the specific services being sought.

3. Any Quality Assurance and Value Engineering Programs should also be included.

2. STANDARD SPECIFICATIONS

The Project shall be constructed in accordance with these specifications, the Pinellas County Engineering Standard Details and the Florida Department of Transportation "Standard Specifications for Road and Bridge Construction", Latest Edition.

3. GOVERNING DOCUMENTS

The Specifications and all supplementary documents are essential parts of the Contract, and a requirement occurring in one is as binding as though occurring in all. They are intended to be complimentary and to describe and provide for a complete project. In case of discrepancy, calculated dimensions will govern over scaled dimensions.

The Contractor shall take no advantage of any apparent error or omission in the specifications. If the Contractor discovers such an error or omission, they shall immediately notify the Project Manager. The Project Manager will then make such corrections and interpretations as may be deemed necessary for fulfilling the intent of the specifications.

4. COOPERATION WITH OTHERS

The Contractor shall cooperate with the owners of any underground or overhead utilities in their removal and rearrangement operations in order that these operations may progress in a reasonable manner and that service rendered by these parties will not be interrupted.

A. Permits

1. City ROW Use Permit: The Contractor will obtain a Right of Way Use Permit from the City Permits Division located at 155 Corey Avenue, Florida. There will be no fee for this permit.
2. Public Services will require shop drawings, schedule, and the location of staging areas at the pre-construction meeting. Where the Contractor wishes to use private property, he shall obtain permission from the owner in writing and submit a copy at the first meeting.
3. The Contractor will be responsible for the requirements of all permits. There may be FDOT permits required for this project.

5. LINES, GRADES AND CONSTRUCTION SURVEYING

The Contractor shall lay out the work from the benchmarks, grades, dimensions, points and lines noted on the working drawings, established at the site, or supplied by the Project Manager. All work of every description shall be laid out and checked by the Contractor who will be held solely responsible for its correctness, and the Contractor shall pay for all expenses in connection with this work. The Contractor shall request clarification from the Project Manager of any errors, inconsistencies or omissions which they may discover. It is the Contractor's responsibility to review every street prior to milling and paving, including the inspection of overhead tree limbs, overgrown grass on pavement, manholes and gate valves.

The work may be checked by the Project Manager, and in the event of a discrepancy, their decision shall be final. No special compensation will be made to the Contractor to defray costs of any work or delays occasioned by making surveys and measurements, tests, or inspections, but such costs shall be considered as having been included in the price stipulated for the several items of work to be done under this Contract.

All attempts shall be made to protect existing property corner monumentation. The monumentation must be identified and marked prior to construction to ensure its permanency. All survey monuments, property corners, and benchmarks, which may be disturbed during construction, shall be referenced and replaced by the Contractor. All monuments and benchmarks disturbed or destroyed by the Contractor or any of his forces through accident or negligence shall be replaced by a Florida Licensed Professional Land Surveyor at the Contractor's expense. All survey markings shall be brought to the attention of the Project Manager.

6. MAINTENANCE OF DETOURS

The Contractor shall repair, at his expense, all potholes and other localized failures on streets which are used as detour routes to facilitate construction operations.

7. REPLACEMENT OF TRAFFIC, STREET SIGNS, SIGNAL LOOPS AND MAILBOXES

The Contractor shall remove and re-erect all existing traffic, street signs and mailboxes within the project site at his own expense for those which must be moved or relocated to permit construction operations.

The Contractor shall notify the City prior to disturbing any traffic signal loops and the City will install new traffic signal loops under a separate contract.

8. USE OF PREMISES

The Contractor shall confine all apparatus to the roadway or right-of-way in which the work is being performed and will not unreasonably encumber these premises with such apparatus, materials, supplies, and equipment. The Contractor shall promptly remove and dispose of all debris resulting from his operations.

9. PROSECUTION OF WORK/ LIQUIDATED DAMAGES

The Contractor shall begin work on any project/road no later than fourteen (14) calendar days after receipt of the "Notice to Proceed"; and shall diligently prosecute the same to project completion prior to the expiration of the total number of calendar days determined necessary for the project, from the date of said "Notice to Proceed".
Failure to complete each project within the determined number of calendar days shall cause the Contractor to be subject to the provisions for Liquidated Damages. The Contractor shall pay to the City as fixed liquidated damages for each calendar day of delay until the work is complete or accepted, and the Contractor and their sureties, jointly and severally, shall be liable for the amount thereof:

A. For each Task Work Order issued, the City project manager will determine the required number of days for completion of all work as well as the amount for liquidated damages, as appropriate.

B. Liquidated Damages will be assessed in accordance with Part I, 2. Special Conditions, J. Liquidated Damages of these bid specifications.

** Please refer to City of St Pete Beach Terms and Conditions, “Liquidated Damages, Penalties and Non-Conformance to Contract”

10. CONSTRUCTION SCHEDULE

A. Work shall be performed on an “as needed” basis for a **three (3) year contract period**. Upon mutual consent, this agreement may be extended for **two (2) additional one (1) year periods**, subject to the same terms and conditions and available funding being in place. No guarantee of volume or quantity of work is intended.

B. At the direction of the City of St Pete Beach, the Contractor will not be allowed to proceed with the scheduled work until restoration of preceding work areas are restored to the satisfaction of the City of St Pete Beach. It is the intent of this project to:

1. Start paving each street no later than three (3) working days after milling each street. If the street has not been paved after three (3) working days, a fee equal to the daily amount for liquidated damages indicated in Item #2J (above) will be assessed until the street has been paved. The time limit for streets to be paved where sewer manhole castings or water valve boxes need to be adjusted or replaced will be three (3) working days after the casting or water valve boxes have been adjusted or replaced.

2. Complete restoration including temporary striping and clean-up, shall be finished in no more than five (5) working days after the completion of paving activity and as directed by the City.

3. No work shall be done during the week between the hours of 9:00 PM and 6:00 AM, or between the hours of 9:00 PM and 9:00 AM on weekends or holidays; except for emergency work by a public service utility or by other permit approved by the City.
4. Night work may be established by the Contractor as regular procedure by obtaining the written permission of the City. Such permission may be revoked at any time by the City, if the Contractor fails to maintain adequate equipment and supervision for the proper execution, control, and safety of the work at night.

C. Work may need to be performed under more urgent timeline at the direction of the City of St Pete Beach. The Contract bid form includes pay items for Emergency Mobilizations for such occurrences. The Contactor shall respond to Emergency Work Requests within 24 hours and should expect to mobilize in less than 72 hours.

11. CONTRACTOR'S ACCEPTANCE OF CONDITIONS

The provisions of this Contract shall control any inconsistent provisions contained in the specifications. All Drawings and Specifications have been read and carefully considered by the Contractor, who understands the same, and agrees to their sufficiency for the work to be done.

It is expressly agreed that under no circumstances, conditions or situations shall this Contract be more strongly construed against the City than against the Contractor and his Surety.

Any ambiguity or uncertainty in the Drawings or Specifications shall be interpreted and construed by the Project Manager, or their designee, and their decision shall be final and binding upon all parties.

It is distinctly understood and agreed that the passing, approval and/or acceptance of any part of the work or material by the City, the Project Manager, or by any agent or representative as in compliance with the terms of this Contract and/or of the Drawings and Specifications covering said work, shall not operate as a waiver by the City of strict compliance with the terms of this Contract, and/or the Drawings and Specifications covering said work; and the City may require the Contractor and/or his surety to repair, replace, restore and/or make to
comply strictly and in all things with this Contract and the Drawings and Specifications any and all of said work and/or materials which within a period of one year from and after the date of the passing, approval, and/or acceptance of such work or material, are found to be defective or to fail in any way to comply with this Contract or with the Drawings and Specifications.

This provision shall not apply to materials or equipment normally expected to deteriorate or wear out and become subject to normal repair and replacement before the condition is discovered. The Contractor shall not be required to do normal maintenance work under the guarantee provisions. Failure on the part of the Contractor and/or his surety, immediately after notice to either repair or replace any such defective materials and workmanship, shall entitle the City, if it sees fit, to replace or repair the same and recover the reasonable cost of such replacement and/or repair from the Contractor and/or his surety, who shall in any event be jointly and severally liable to the City for all damage, loss and expense caused to the City by Reason for the Contractor's breach of this Contract and/or his failure to comply strictly and in all things with this Contract and with the Drawings and specifications.

12. HAZARDOUS MATERIALS

The Contractor shall be responsible for the independent inspection and certification of the removal, transportation and disposal of all identified and all unidentified hazardous materials located within the project site.

13. JOB CONDITIONS

A. The Contractor is to provide the City with a working schedule prior to commencing the project. The City reserves the right to revise and/or adjust the schedule accordingly.

B. City Notification**:** At least 72 hours in advance of closing, or partially closing, any street, alley, or other public thoroughfare, the Contractor shall notify the Engineering Division of the Public Services Department, and immediately notify the same agencies of the reopening.

C. Customer Notification**:** The City of St Pete Beach residents occupying a home on the street to be milled and paved shall be notified seven (7) days before the construction of the street begins. This is completed by the following:

1. A door hanger notice will be provided by the Department of Public Services. It shall contain the reason for the construction, the overall length of time with dates, any problems that may be encountered and other important information regarding the project. The Contractor is responsible for the installation of the door hanger notices no later than seven (7) working days before the construction of the street begins.

2. The Contractor shall hand this notice to each resident. If the resident is not available, the Contractor is to place the door hanger on the doorknob. In certain sensitive areas, usually business areas and as requested by the Engineer, each customer may be asked to sign a signature sheet with their name, address, and signature. The original shall be given to the Department of Public Services before any construction commences.

D. Utility Emergency Access**:** All fire hydrants, valves, water meters and backflow assemblies shall be free of all construction material and equipment and in plain view for easy emergency access or necessary maintenance by the City crews.

E. Pedestrian or School Crossings**:** Where the work crosses or interferes with school or pedestrian crossings, extreme care shall be taken by the Contractor to insure the safety of the school children or other pedestrians.

F. Temporary Staging Areas**:** The Contractor shall obtain all temporary construction staging areas approvals required and shall not encroach onto private property unless a written agreement has been made between the property owner and the Contractor; or onto public property unless a written agreement has been made and approval by the Purchasing Division's designee has been received prior to using the land. The Contractor shall assume full responsibility for the protection and safekeeping of materials stored at the staging areas.

G. Erosion Control**:** Prior to construction, all efforts for siltation/erosion control will be taken, including the use of turbidity screens, hay bales, and sod replacement at the earliest possible time prior to and after excavation/grading. Sediment/erosion controls should be used around drainage structures and any areas to mitigate erosion on or off the project site. The Contractor is responsible for any removal of asphalt debris in manholes or drainage structures.

H. Road Hauling**:** The existing paved roads in the City shall be used for transporting material required for construction of the project. The Contractor should be aware that any road that is damaged during construction due to truck/equipment involvement would be the responsibility of the Contractor to correct. The Contractor shall contact the City for specific routes to be used during construction.

I. Water on Street**:** All water shall be removed, and the streets dry prior to paving. No paving shall take place during a rainstorm event.

J. Towing of Vehicles**:** The City will remove any cars parked in the way of the resurfacing project as long as proper notification has been given as stated under Section 13.c. (above) of the Scope of Work.

K. Clippings**:** Where grass, tree roots or other vegetation has grown over or above the edge of the asphalt, it shall be removed to the existing edge of asphalt by the Contractor prior to paving the street.

L. City Utilities**:** If work by the Contractor results in damage to City owned utilities; the Contractor shall repair the damage immediately at no cost to the City. If the Contractor does not respond immediately to repair the damaged utility, the City Utilities Department will make the repair and bill the Contractor for the costs incurred.

M. Dumpsters**:** The City will relocate all dumpsters in the way of this project. The Contractor is to provide written notice to the City forty-eight (48) hours in advance when said dumpsters need to be moved.

N. Disturbed Areas**:** All areas disturbed by the construction shall be restored to a condition at least equal to the pre-construction conditions or to what shall be approved by the Project Manager.

O. Security**:** The Contractor shall be responsible for the site security and shall determine whether full time watchmen will be required. The Contractor shall inspect the area daily and take whatever measures necessary to protect the safety of the public, workmen and materials both day and night.

P. Brick/Driveways**:** The Contractor shall be responsible for the tack coat not being spread to the brick crosswalks, brick intersections, brick speed tables, driveways or other similar areas due to the hauling of the asphalt. These areas shall be covered with sand or other City approved material. If tack appears on these items from the Contract, it shall be the responsibility of the Contractor to remove it.

Q. Interference with Others**:** The Contractor shall coordinate with Pinellas Suncoast Transit Authority or any public agency to notify the agency of any and all potential disruption in service. The Contractor shall not interfere with materials, appliances, or workmen of the City, Private Utility Companies, or any other contractor, who may be performing work at the same sites. All contractors and other parties involved shall have equal rights as far as practicable, to the use of all roads and grounds, except as otherwise provided by these specifications. The decision of the Project Manager shall govern in cases of disagreement between contractors or other parties regarding such use.

R. Public Safety**:** The Contractor shall provide, erect, and maintain continually, seven days per week and twenty-four hours per day, all necessary barricades, reflectorized signs, signals, flashing lights, red lights, "danger" or "caution" or "street closed" signs, etc., and take all necessary precautions necessary for the protection of the work and the safety of the public. The Contractor shall also provide a watchman at all places where the work causes obstructions to normal traffic or constitutes in any way a hazard to the public.

S. Cleaning Up**:** The Contractor shall always keep the construction area clean from accumulation of waste material or rubbish, including storage areas. The Contractor shall remove any rubbish, tools, scaffolding, equipment and materials from and about the premises, which do not belong to the City, prior to completion of the work. The Contractor shall leave the work and premises, following the completion of work, in a clean and workmanlike condition satisfactory to the Project Manager or their representative.

T. Coordination of Details with the County Sheriff**:** Any traffic detour plan must be submitted by the Contractor for approval to the Engineer of Record, the Engineering Division of the Public Services Department and the Pinellas County Sheriff at least two (2) weeks prior to the implementation of said detour in order to provide adequate time for review. Detour plans must include all streets involved in the detour.

U. Maintaining Proper Drainage Flow**:** No drainage structure or paved waterway shall be blocked by the new pavement work. New pavement shall be feathered or tapered towards the inlet opening. This task is to be included as part of the paving operation and there shall be no separate payment for this work. Any debris entering the drainage structure during construction is to be removed by the Contractor.

V. Responsibility of the Contractor**:** The Contractor shall be entirely responsible and liable for all damage or injury as a result of his operations to all other adjacent public and private property, structures of any kind and appurtenances thereto met with during the progress of the work. The cost of protection, replacement in their original locations and conditions or payment of damages for injuries to such adjacent public and private property and structures affected by the work, whether or not shown on the drawings and the removal, relocation and reconstruction of such items called for on the drawings or specified shall be included in the various Contract Items and no separate payments shall be made thereof. Where such public and private property, structures of any kind and appurtenances thereto are not shown on the drawings and when, in the opinion of the Project Manager to avoid interference with the work, payment therefore will be made as provided for extra work in the Agreement. The Contractor is expressly advised that the protection of the buildings, structures, tanks, pipelines, and related work adjacent and in the vicinity of his operations, wherever they may be, is solely his responsibility.

W. Protection of Trees, Lawn & Sod**:** All trees, shrubs and sod shall be adequately protected by and in accordance with all ordinances governing the protection of the trees. No materials shall be placed so as to injure such trees, shrubs and sod. Trees, shrubs and sod destroyed by negligence of the Contractor or his employees shall be replaced by him with new stock of similar size and age, at its proper season and at the sole expense of the Contractor. Trees close to the work shall be protected against injury. The Contractor shall trim all branches and roots in the road that are necessary to complete the project and are liable to damage his operations, but in no case shall any tree be cut or removed without prior notification of the Project Manager. It is the Contractor's responsibility to inspect all roads that are to be milled and resurfaced. All injuries to bark, trunk, limbs, and roots of trees shall be repaired by dressing, cutting, and painting according to approved methods, using only approved tools and materials under the direction of City Staff. Lawn areas shall be left in good condition as before the starting of the work. Where sod has been removed shall be restored with new sod in a good workmanship manner approved by the resident or the Project Manager. The sod shall match existing grass and shall have no visible broad leaf weeds or foreign grasses. Water for the sod shall be supplied by the Contractor in sufficient quantities required to keep the grassed areas moist for a period of one month from the date of installation. The Contractor shall guarantee the satisfactory growth for a 90-day period.

X. Noise**:** The Contractor shall eliminate noise to as great an extent as practicable at all times. Air compressing equipment shall be equipped with silencers and the exhaust of all gasoline motors or other power equipment shall be provided with mufflers. In the vicinity of hospitals and schools, special care shall be used to avoid noise or other nuisances. The Contractor shall strictly observe all local regulations and ordinances covering noise.

Y. Access to Public Services**:** No materials used in the construction of the work shall be placed as to prevent free access to all fire hydrants, valves, manholes, driveways and roadways.

14. SUBSTITUTIONS

Whenever material or equipment are specified or described in the Contract documents by using the name of a proprietary item or the name of a particular supplier the naming of the item is intended to establish the type, function and quality required. Unless the name is followed by words indicating that no substitution is permitted, materials or equipment of other suppliers may be accepted by Project Manager if sufficient information is submitted by Contractor to allow Project Manager to determine that the material or equipment proposed is an approved alternate to that named. The procedure for review by the Project Manager will include the following as supplemented in the General Requirements. Requests for review of substitute items of material and equipment will not be accepted by Project Manager from anyone other than Contractor. If Contractor wishes to furnish or use a substitute item of material or equipment, Contractor shall make written application to Project Manager for acceptance thereof, certifying that the proposed substitute will perform adequately the functions and achieve the results called for by the general design, be similar and an approved alternate to that specified and be suited to the same use as that specified. The application will state that the evaluation and acceptance of the proposed substitute will not prejudice Contractor's achievement of Substantial Completion on time, whether or not acceptance of the substitute for use in the work will require a change in any of the contract documents (or in the provisions of any other direct contract with City for work on the Project) to adapt the design to the proposed work is subject to payment of any license fee or royalty. All variations of the proposed substitute from that specified will be identified in the application and available maintenance, repair and replacement service will be indicated. The application will also contain an itemized estimate of all costs that will result directly or indirectly from acceptance of such substitute, including costs of redesign and claims of other Contractors; affected by the resulting change, all of which shall be considered by Project Manager in evaluating the proposed substitute. The Project Manager may require Contractor to furnish at Contractor's expense additional data about the proposed substitute.

15. MINIMUM QUALIFICATIONS

The City has established minimum qualifications for Contractor expertise and experience regarding the subject project as follows:

A. The Contractor must provide a minimum of three (3) project references and may provide a maximum of five (5) project references for each of the five (5) criteria listed below.

B. Each project reference must have been successfully completed in the ten (10) years preceding the bid opening.

C. All criteria do not need to be satisfied by each submitted project reference, however, all criteria must have been satisfied two (2) times by the submitted project references.

D. Any project for which references are provided may have been self-performed with Contractor’s employees or performed by a subcontractor who is part of the Contractor’s team for this project.

E. The Contractor qualification requirements include the following:

1. Construction of site work including clearing, grubbing, and fine grading.
2. Construction of flexible and rigid pavement roadways, alleys, and trails.
3. Construction of sidewalk and ADA accessibility improvements.
4. Construction of stormwater utility upgrades.

5. Construction of signal, lighting, and intelligent transportation system (ITS) component upgrades.

[END OF PART I]

PART II: PROGRESS MEETINGS

1. **FREQUENCY**

Progress meetings will be held every other week or less, with the first meeting fourteen (14) days after the pre-construction meeting or fourteen (14) days or less after the date of the Notice to Proceed.

The City has the right to hold called meetings as required by the progress of the work.

2. **ATTENDANCE**

The following people should attend progress meetings, as applicable:

- Project Manager
- City Inspector Contractor
- Subcontractors as appropriate to the Agenda Suppliers as appropriate to the Agenda Others as appropriate

3. **PROGRESS SCHEDULE**

The Contractor shall submit a detailed schedule before work is to be started. It shall indicate the sequence of the work, the time of starting and completing each part.

4. **SUGGESTED AGENDA**

- Review approval of minutes of previous meetings. Review of work progress.

Field observations, problems, and conflicts. Problems which impede the construction schedule. Review of off-site fabrication, delivery schedules.

- Corrective measures and procedures to regain projected schedule, if necessary. Revisions to construction schedule.
- Progress schedule during succeeding work period. Coordination of schedules.
- Review submittal -- expedite as required. Maintenance of quality standards.
- Pending changes and substitutions. Shop drawing submittals.
- Review proposed changes for:
  Effect on construction schedule and on completion date. Effect on other contracts of the project.
  Other business

[END OF PART II]

***P*ART III: TECHNICAL SPECIFICATIONS**

1. GENERAL

Furnish all necessary labor, equipment, and materials to construct various types of public services infrastructure projects as outlined in Part I General Requirements, 1. Introduction.

Tasks may involve milling existing asphaltic concrete surfaces to specified depths. Excess milled material should be transported to an asphalt reprocessing plant. The streets specified should be surfaced with Superpave asphaltic concrete mix. Additionally, tasks include necessary adjustments or replacements of existing structures, traffic control, sweeping, cleanup, placement of painted and thermoplastic pavement markings, and installation of curb, gutter, and sidewalks.

2. MOBILIZATION

A. The Contractor is solely responsible for providing security for all materials stored on- site during the construction activities.
B. The Contractor shall provide ten (10) calendar days notification to the Engineer prior to initiating mobilization to the site and initiating work. The Contractor will also provide copies of all permits that have been obtained to the engineer prior to initiating work associated with such permits.
C. The Contractor shall restrict their operations to the designated work area and ensure that construction activities do not disrupt normal operational activities of the City's services.

D. The Contractor is responsible for visually inspecting the site to note obstructions or access difficulties.

E. The Contractor is responsible for providing and/or maintaining access to the work site to facilitate all construction, inspection and testing activities.

F. The contractor shall deliver/post notifications to affected citizens and business owners seven (7) calendar days prior to construction. A form of the notification must be approved by the City prior to distribution.

3. MILLING

A. Furnish all necessary labor, equipment and materials to mill pavements as specified, and haul the milled material to the reprocessing plant.

B. The methods used for milling shall meet all applicable portions of Section 327 - Milling of Existing Asphalt Pavement, Florida Department of Transportation Standard Specifications for Road and Bridge Construction, latest revision.
C. All manhole castings and water valve boxes shall be adjusted and/or replaced by the Contractor, as specified, after milling is completed.

D. When the full street is required by these documents to be milled, the desired finished cross slope is to be 2%.

E. The unit price per square yard (SY) shall be full compensation for all work required to perform the milling, loading, hauling, sweeping, clean-up, and all incidentals necessary to complete the work specified in this section.

F. Milling of existing asphalt speed humps and speed tables is required as specified in the plans.

4. CONCRETE CURB AND GUTTER (INSTALLATION)

A. All Concrete Curb and Gutter work shall conform to the requirements of Section 520, "Concrete Gutter, Curb elements and Traffic Separator," of the FDOT Standard Specifications and placed in conformity with the lines, grades, dimensions and notes shown in the contract plans.

B. Forms for this work shall be made of either wood or metal and shall have a depth at least equal to the Plan vertical dimensions for the depth of the concrete being deposited against them. They shall be straight and free from warp or bends and of sufficient strength and rigidity, when staked, to resist the pressure of the concrete without deviation from line and grade. If wooden forms are used, they shall be of a cross-section approved by the Project Manager and shall have a flat surface on top. The Contractor shall use flexible forms for all curb and gutter constructed on a radius.

C. Excavation shall be to the required depth, and the foundation material upon which these items are to be placed shall be compacted as specified in Section 120-9, "Compaction Requirements" of the FDOT Standard Specifications.

D. The concrete shall be placed in the forms and tamped and spaded in place so that all honeycombs will be eliminated, and sufficient mortar brought to the surface. The top of the section shall be floated smooth, and its edges rounded to the radius shown on the plans. No concrete shall be placed during unfavorable weather conditions.

E. Except for machine placed concrete, at the option of the Contractor, joints may be formed by the use of dummy joints (either formed or sawed) or by the use of sheet metal templates. If sheet metal templates are used, they shall be at least as long as the depth of the curb section. They shall be set perpendicular to the top and face of the curb form and shall be held firmly in place during the placing of concrete. Templates shall remain in place until the concrete has set sufficiently to hold its shape, but shall be removed while the forms are still in place.

For machine placed concrete, unless an alternate method is approved by the Project Manager, contraction joints shall be sawed. The joints shall be sawed as soon as the concrete has hardened to the degree that excessive raveling will not occur and before uncontrolled shrinkage cracking begins.

Contraction joints shall be spaced at intervals of ten feet (10') except where a lesser interval is required for closure, but no section shall be less than four feet (4') in length. On medians and traffic separators, cuts shall align across from each other. Cuts shall also align with contraction joints of sidewalks adjacent to the curb.

Expansion joints shall be constructed at all structures, at all ends of curb returns, except that expansion joints shall not be constructed within twenty (20) feet of an island nose. They shall be located at intervals of 500 feet between other expansion joints or ends of a run. The expansion joint filler shall be ½ inch in width and shaped to the cross section of the curb.

F. The forms shall be removed within twenty-four (24) hours after the concrete has been placed, and minor defects then filled with mortar composed of one part of Portland cement and two parts of fine aggregate. Plastering will not be permitted on the face of the curb or the gutter. Any rejected curb and gutter shall be removed and replaced at no additional cost to the City. All exposed surfaces shall be given a brush finish while the concrete is still green. For any surface areas, however, which are too rough or where other surface defects make additional finishing necessary, the Project Manager may require that the curb be rubbed to a smooth

surface with a soft brick or wood block, with water used liberally. Also, if necessary further to provide a suitable surface, the Project Manager may require additional rubbing, using a thin grout or mortar, either of which additional rubbing shall be at no additional cost to the City.

G. When surface finishing is completed, the curb and gutter shall be cured per applicable paragraphs of Section 520-8, of the FDOT Standard Specifications.

H. After the concrete has set sufficiently, but not later than three (3) days after pouring, the spaces in front and back of the curb and gutter sections shall be refilled to the required elevation, with suitable material, adequately compacted. In sections where sidewalk is to abut the curb, the backfill shall be placed and compacted to a suitable depth for the placing of sidewalk forms. In all other sections of the work, the back of the curb shall be backfilled to the required elevation with suitable material, which shall be placed and thoroughly compacted in layers of not more than six inches (6") in thickness.

I. Where a base is to be constructed adjacent to a curb and gutter, the curb and gutter shall be properly backfilled and shall set for a period of not less than seven (7) days before any base material is placed against it.

J. The top and face of the finished curb and gutter shall be true and straight, and the top surface of curbs shall be uniform width, free from humps, sags, or other irregularities. When a straightedge ten feet (10') long is laid on the top or face of the curb or on the surface of gutters, the surface shall not vary more than 0.01 foot from the edge of the straightedge, except at grade changes or curves.

K. Full compensation for conforming to the requirements of this Section shall be considered as included in the unit price paid per linear foot (LF) for constructing concrete curb, curb and gutter, or valley gutter, complete in place and accepted, and no additional compensation will be allowed therefore.

5. CONCRETE SIDEWALKS (INSTALLATION)

A. All Concrete Sidewalk work shall conform to the requirements of Section 522, "Concrete Sidewalks and Driveways", of the FDOT Standard Specifications and these Special Provisions and placed in conformity where so ordered by the Project Manager.

B. Forms for this work shall be made of either wood or metal and shall have a depth at least equal to the Plan vertical dimensions for the depth of concrete being deposited against them. They shall be straight, free from warp or bends, and of sufficient strength and rigidity, when staked, to resist the pressure of the concrete without deviation from line and grade. If wooden forms are used, they shall be of cross-section approved by the Project Engineer and shall have a flat surface on top. The Contractor shall use flexible forms for all headers constructed on a radius.

C. Tree roots within the sidewalk area shall be removed to a minimum depth of one foot (1') below the specified subgrade surface. If a contractor must cut tree roots, sharp cuts shall be made. All roots greater than 2” shall be cut clean with a hand saw. The contractor shall hand dig near the roots and saw the roots, heavy mechanical equipment shall not be used. Broken roots shall be sawed 2” behind the ragged end. Roots smaller than 2” may be cut with a sharp-edged hand tool. Crushed or torn roots are more likely to allow decay. Sharply cut roots produce a flush of new roots helping the tree to recover from its injury. If tree roots larger than 6” must be cut, the Contractor shall inform the City Engineer or his representative prior to cutting for field direction. All boulders, organic material, soft clay, spongy material and any

other objectionable material shall be removed and replaced with material approved by the Engineer.

Before placing the forms for sidewalks, the surface upon which they are to be built shall be brought to the specified line, grade and elevation and uniformly compacted to a minimum 85 percent of AASHTO T-99 density. The materials shall be compacted at a moisture content such that the specified density can be uniformly attained. If necessary to attain the specified density, water shall be added to the material, or the moisture content shall be lowered by manipulation or allowing the material to dry, as is appropriate.

Fill areas including cut areas under the sidewalk which have been excavated more than six inches (6") below the bottom of sidewalk shall be compacted to a minimum of 95 percent of AASHTO T-99 density. The area to be compacted is defined as that area directly under the sidewalk and one foot (1') beyond each side of the sidewalk when right-of-way allows.

D. Transverse expansion joints shall be placed at intervals not exceeding eighty feet (80'), and at all places where a walk intersects or abuts a curb, driveway, building, other sidewalk or fixed objects. Expansion joints shall be constructed at each side of structures and at ends of curb returns, except that expansion joints shall not be constructed within twenty feet (20') of an island nose. Expansion joints shall be filled with ½ inch thick premolded joint filler conforming to the provisions in Section 932 of the Standard Specifications. The joint filler shall be shaped to the cross section of the sidewalk, shall extend from the surface to the subgrade, and shall be at right angles to the sidewalk surface.

   Contraction joints shall be sawed and shall be at intervals of four (4) to six (6) feet, or as shown on the plans. A slot approximately 3/16 inches wide and not less than 1 ½ inches deep shall be cut with a concrete saw after the concrete has set, and within twenty-four (24) hours of concrete being poured. Open type joints shall not be allowed.

E. Just prior to placing the concrete, the subgrade shall be moistened. The concrete shall be placed in the forms and tamped and spaded in place so that all honeycombs will be eliminated and sufficient mortar brought to the surface. Thereafter, the surface shall be brought to a smooth even finish by means of a wooden float. No concrete shall be poured during unfavorable weather conditions.

F. The concrete shall be given a broom finish. The top of the finished sidewalk shall be true and straight, and the top surface of sidewalks shall be uniform width, free from humps, sags, or other irregularities. When a straightedge ten feet (10') long is laid on the top of the sidewalk the surface shall not vary more than 0.01 foot from the edge of the straightedge, except at grade changes or curves.

G. When surface finishing is completed, the sidewalk shall be cured per applicable paragraphs of Section 520-8, of the Standard Specifications. After concrete has set sufficiently, but no later than three (3) calendar days after pouring, the space alongside the sidewalk shall be backfilled, compacted and sodded or seeded as shown on the striping plans.

H. Full compensation for conforming to the requirements of this Section shall be considered as included in the unit price paid per Square Yard for constructing sidewalks, complete in place and accepted, and no additional compensation will be allowed therefore.

6. LEVELING/RESURFACING

A. **Material:**

1. The material used for leveling shall be Superpave asphaltic concrete.

2. The material used for resurfacing shall be Superpave asphaltic concrete. Friction Course mixes may be used as specified by the City Project Manager.

B. **Construction Requirements:**

1. The leveling and resurfacing shall commence within three (3) working days after the milling of each street. The time limit for streets where castings or other water valve boxes need to be adjusted or replaced will be three (3) working days after the casting or water valve box has been adjusted or replaced.

2. The methods used for re-paving shall meet all applicable portions of Section 330 - Hot Mix Asphalt General Construction Requirements, Florida Department of Transportation Standard Specifications for Road and Bridge Construction, latest revision.
3. The Contractor shall contact all utility and TV cable companies for location of their facilities. The exact location of their facilities, type of material used by the utility and TV cable, etc. shall be determined by the Contractor prior to any excavation work required by this Contract.

4. The Contractor shall be responsible for the protection of all pavements, sidewalks, and other improvements within the work area. All damage to such improvements, as a result of the Contractor's operations, beyond the limits of the work of pavement replacement as described herein, shall be repaired by the Contractor at the Contractor's expense.

5. Testing by City: Testing may be completed by an independent testing laboratory. If core borings are done to determine thickness and density, the Contractor is responsible for filling these holes in the pavement.

C. **Quality Control:**

1. The Contractor shall have a Quality Control Technician who has been certified by the State of Florida Department of Transportation as a Certified Asphalt Plant Technician, available at the asphalt plant at all times the Contractor is producing asphalt mix for use on this project.

2. The Contractor's quality control procedures, inspection and tests shall be documented, and that information shall be available for review by the Project Manager or his representative, throughout the course of the Contract.

3. The mix design shall meet the requirements of Section 334-3.2 for the type of Superpave asphalt indicated in the plans as set forth in Florida Department of Transportation Standard Specifications for Road and Bridge Construction, latest revision. Friction course asphalt concrete must meet the requirements of Section 337 for the type of friction course indicated in the plans. Submit a Notarized Certification of Specification Compliance letter on company letterhead to the Engineer stating that all material produced and placed on the project was in substantial compliance with the specifications. The City may run independent tests during the project to determine the acceptability of the material.

7. UTILITY ADJUSTMENTS & REPLACEMENTS

A. **Adjusting Existing City Valve Boxes:**

1. The Contractor is to provide the necessary equipment to adjust the castings without damaging the existing structure. Adjustment would include being able to screw the top portion of the valve box up or down. Water valves that cannot be adjusted either up or down must be replaced under Section 6.2. If the structure is damaged, the Contractor is to replace the structure to its original condition at their cost.

2. The materials and construction methods for this work shall conform to applicable portions of Section 425 Inlets, Manholes and Junction Boxes, Florida Department of Transportation Standard Specifications for Road and Bridge Construction, latest revision.

3. The quantities to be paid for under this section shall be for the number of valve boxes, adjusted physically.

4. Structures, sections of structures, valve box sections or other items necessary for adjustment that are considered debris and that has been removed by the Contractor as part of the progress of work shall be removed from the project site by the Contractor at the end of each day's work. The Contractor is to remove all debris deposited in the structure as a result of the work performed.

B. **Castings:**

1. The Contractor shall notify the Project Manager or his representative on any questions regarding the prior adjustment or replacement of manhole frames or valve boxes.

2. Manhole frame and covers and valve boxes to be replaced are to be furnished by the Contractor.

3. Castings damaged by construction shall be replaced at no additional cost to the City of St Pete Beach.
4. All castings shall be adjusted and replaced in accordance with the manufacturers recommended requirements.

5. Adjusted or replaced castings shall be set at the grade of the proposed asphalt after compaction with not more than ¼" variation in 10 feet.

8. STRIPING AND MARKINGS

A. **Temporary Striping**: Temporary traffic stripes and markings will be required. Temporary markings shall be placed immediately after milling on any arterial/collector roads or within the immediate proximity of a school, and immediately after final asphalt on all roads. Before opening any re-paved area to traffic, temporary markings shall be applied as specified by the Project Manager. The paint used for this work shall be in accordance with the FDOT specification.

B. **Permanent Striping**: The Contractor shall place permanent traffic stripes and markings in accordance with reference points and alignment gathered by the Contractor prior to milling or overlay or in accordance with striping plans provided by the City of St Pete Beach. The Contractor shall use an Alkyd/Maleic thermoplastic compound and application methods meeting the requirements of Section 711 – Thermoplastic Pavement Markings, Florida Department of Transportation Standard Specifications for Road and Bridge Construction, latest revision. The thermoplastic compound shall be extruded on the pavement surface in a molten state by mechanical means with surface application of glass spheres, and upon cooling

to ambient pavement temperature shall produce an adherent pavement marking of the specified thickness and width and capable of resisting deformation.

C. A minimum of 21 days curing time after asphalt placement shall be allowed before the placement of any thermoplastic marking commences, with all thermoplastic markings to be completed within 28 days after asphalt placement.

D. The color of the thermoplastic shall be white, yellow, or blue as specified by the M.U.T.C.D.; and revisions thereof.

9. CLEANUP AND DUST CONTROL

A. The Contractor shall furnish and operate a minimum of one (1) mechanical sweeper for the purpose of removal of loose milled material. After milling and before resurfacing, the Contractor shall water the streets as necessary to prevent dust nuisance from his operations or from traffic.

B. Upon completion of the work on each street and before acceptance, the Contractor shall remove all surplus and discard materials and rubbish; shall restore in an acceptable manner all property, both public and private, which has been damaged during the prosecution of the work and shall leave each street in a neat and presentable condition throughout the entire length of the work under Contract. This shall include, but not be limited to the overspray of tack, and shall be completed within one (1) week after the resurfacing of each street.

C. Failure of the Contractor to comply with the Project Manager cleanup orders may result in an order to suspend work until the condition is corrected. No additional compensation will be allowed as a result of such suspension.

D. 5% of the value of the work performed may be retained, should at the opinion of the City, restoration not be completed.

E. The cost of all work regarding Cleanup and Dust Control shall be included in the prices for other pay items, which are included in the Contract.

F. The Contractor shall reflect in the schedule, which shall be approved prior to construction, the time required for complete restoration. The Contractor shall strictly adhere to the schedule.

G. The Contractor shall take the necessary measures to prevent siltation and other construction related materials including tack coatings from entering storm inlet structures and manhole structures during the road repaving operation.

10. TRAFFIC CONTROL, STREET CLOSURES, DETOURS AND BARRICADES

A. The Contractor shall comply with all applicable portions of Section 102 – Maintenance of Traffic – Florida Department of Transportation Standard Specifications for Road and Bridge Construction, latest revision, and City requirements for traffic control.

B. The Contractor shall furnish all necessary barriers, lights, signs, and flag persons, to advise the public of detours and construction hazards. All flag persons on site shall be properly qualified.

C. The Contractor shall be responsible for compliance with additional public safety requirements, which may be ordered by the Project Manager or his authorized representative.

D. Failure of the Contractor to comply with the public safety requirements may result in an order to suspend work until the condition is corrected. No additional compensation will be allowed as a result of such suspension.

E. The Contractor shall furnish and install, and upon completion of the work, promptly remove all signs and warning devices.

11. SODDING

A. **Description:** All sodding shall conform to the requirements of Section 570, FDOT Manual on Road and Bridge Construction, latest revision.

B. **Materials:**

1. **Sod:** Sod shall be Argentine Bahia as determined by the Project Engineer. Where sodding will adjoin, or be in sufficiently close proximity to, private lawns, other types of sod may be used if desired by the affected property owners and approved by the Project Engineer. The sod shall be taken up in commercial-size rectangles, preferably 12-inch by 24-inch or larger. Maximum allowable deviation from the standard widths and lengths shall be five percent (5%). Broken pads and torn or uneven ends will not be acceptable. The sod shall be sufficiently thick to secure a dense stand of live grass. The sod shall be live, fresh and uninjured, at the time of planting. It shall have a uniform soil thickness of three-fourths inch (3/4"), plus or minus one-fourth inch (1/4"), at the time of cutting. Measurement for thickness shall exclude top growth and thatch. The soil mat shall adhere firmly to the roots such that it will not break, crumble, or tear during handling and placing. No muck or heavy peat soil grown sod will be accepted. All sod shall be 97% free of weeds and other grasses. All sod shall comply with State and Federal laws with respect to inspection for plant diseases and insect infestation. An inspection certificate, required by law, may be requested by the Project Engineer for each shipment. All sod shall be placed as soon as possible after being dug and shall be shaded and kept moist from the time it is dug until it is planted. No sod which has been cut for more than 48 hours may be used unless specifically authorized by the Project Engineer.

2. **Commercial Fertilizer:** All commercial fertilizers shall comply with the State fertilizer laws. All fertilizers shall be uniform in composition, free flowing and suitable for application by mechanical spreader equipment. The chemical designation of the fertilizer shall be 12-8-8 or equivalent ratio. At least 50% of the phosphoric acid shall be from normal super phosphate or an equivalent source which will provide a minimum of two units of sulfur. The amount of sulfur shall be indicated on the quantitative analysis card attached to each bag or other container.

3. **Water:** The water may be obtained from any approved spring, pond, lake, stream or municipal water system. The water shall be free of excessive and harmful chemicals, acids, alkalies, or any substance which might be harmful to plant growth or obnoxious to traffic. Salt water shall not be used. The Contractor shall pay for all water used for the installation of sod.

C. **Construction Methods:**

1. **Soil Moisture:** Rough and fine grading shall be carefully executed to ensure that the final placed sod will conform to existing grades, free of depressions, “bird baths” or

bumps. The area on which sod is to be placed shall contain sufficient moisture for optimum results. During periods of high temperature and after all unevenness in the soil surface has been corrected, the soil shall be lightly irrigated immediately prior to laying the sod. Muddy soil shall not be created.

2. **Placing Sod:** The first row of sod shall be laid in a straight line with subsequent rows placed parallel to and tightly against each other. Lateral joints shall be staggered to promote more uniform growth and strength. Care shall be exercised to ensure that the sod is not stretched or overlapped and that all joints are butted tight in order to prevent voids which would cause air drying of the roots. The sod shall form a solid mass. The sod shall be firmly embedded by light tampering and rolling to ensure contact with the subgrade and to provide a smooth, even surface to eliminate voids under the root system making dry spots. The sod shall be staked on all slopes of 2:1 or steeper with pegs or similar material, driven through the sod blocks, six inches (6") into firm earth at suitable intervals.

3. **Watering:** The sod shall be watered with a fine spray immediately after placing, such that the underside of the new sod pad and soil immediately below the sod are thoroughly wet. The sod shall be kept in moist condition for the duration of the contract period (and in no case less than 4 weeks except in dry season it shall be 8 weeks). The moistened condition shall extend to at least to the full depth of the rooting zone. Water shall not be applied between the hours of 10:00 a.m. and 6:00 p.m.

D. **Maintenance:** The Contractor shall, at no additional expense to the City, maintain the sodded areas in a satisfactory condition until final acceptance of the project. Such maintenance shall include the filling, leveling, and repairing of any washed or eroded areas, as deemed necessary by the Project Engineer. The Project Engineer, at any time, may require resodding of any areas in which the establishment of the grass stand does not appear to be developing satisfactorily. The Contractor shall mow lawns as soon as there is enough top growth to cut with mower set at height of two inches (2") and shall repeat mowing as required throughout the duration of the project, to maintain such height. The Contractor shall not delay mowing until grass blades bend over and become matted and shall not mow when grass is wet.

E. **Measurement and Payment:** Full compensation for conforming to the requirements of this Section shall be considered as included in the unit price paid per square yard (SY) for furnishing, placing, maintaining and replacing sod, complete in place and accepted, and no additional compensation will be allowed therefore.

[END OF PART III]

SECTION 01425
FDOT STANDARDS REFERENCE

PART 1 GENERAL

1.01 Section Includes

Instruction on the use and applicability of FDOT standards on the project

1.02 Requirements

A. The Florida Department of Transportation, Standard Specifications for Road and Bridge Construction, latest non-metric edition ("Standard Specifications"), and Standard Plans for Road Construction, latest non-metric edition ("Standard Plans") are referenced herein as source documents for applicable technical specifications and construction details to be used in the construction of this project. The term “latest edition” refers to the latest edition implemented by FDOT and includes all FDOT implemented supplements at the time of bid advertisement.

B. Method of Measurement and Basis of Payment is to be in accordance with the Florida Department of Transportation Standard Specifications. Any item which is detailed in the Plans and for which material types, sizes and quality are also called out, the "Standard Plans" shall take preference over the plan detail unless otherwise directed by the Engineer.

C. Where the FDOT Standard Specifications use the reference "Department", replace "Department" with "Owner", except for when such reference is to Department Standards and evaluation criteria.

D. The Standard Plans are referenced herein as a source document for applicable construction items and details called for in the plans for which a specific plan detail is not provided. The Contractor shall construct the items called for in the plans in accordance with the "Standard Plans" unless otherwise defined or detailed in the plans or as directed by the Owner, Engineer or authorized representative.

E. The Standard Plans are available for download from the FDOT website at: https://www.fdot.gov/design/standardplans

F. In case of conflict, the Technical Specifications takes precedence over FDOT specifications for a particular construction requirement.

G. Copies of the latest implemented edition and implemented supplements of the Florida Department of Transportation Standard Specifications are available for download from the FDOT website at: https://www.fdot.gov/programmanagement/Implemented/SpecBooks

H. The Contractor shall inform the Owner and Engineer in writing of any specification that the Contractor feels is ambiguous or conflicting with other plan notes and details prior to the construction of the associated item. The Engineer will determine which information is to be used for construction. The Contractor is responsible for the removal and replacement of any item improperly constructed resulting from a misinterpretation of the specifications at no additional cost to the Owner.

PART 2 PRODUCTS - Not Used

PART 3 EXECUTION

3.01 General

The Contractor shall use Divisions Two (II) and Three (III) of the FDOT Specifications as they relate to methods of construction and material types and quality for the appropriate construction items contained within this project.

END OF SECTION

III. BID FORM

See attached Excel document.

IV. GENERAL CONTRACT TERMS

REQUEST FOR PROPOSALS
Civil On Call Construction Services

REQUEST FOR PROPOSAL SUMMARY
The City of St Pete Beach has issued this Request for Proposal (RFP) to solicit competitive bids and proposals from Proposers for a Task Work Order driven Civil On-Call Construction Services Contract. The successful bidder shall provide all labor, materials, equipment, tools, consumables, transportation, and incidentals to provide Public Services capital improvement projects construction services on an 'as needed' basis for the City of St Pete Beach.

The "City" intends to **award multiple contracts** to vendors who can provide the best value for services. Vendors may submit proposals for all, some, or only one of the requested line items or categories. **It is not mandatory to submit a proposal for every item listed**. A bidder may bid on any, all, or none of the items. The "City" reserves the right to select multiple vendors to optimize cost-efficiency and capability across different segments of the project. Proposals will be evaluated based on capability, cost, and capacity to perform the specific line items requested.

PROPOSAL SUBMITTALS
Proposal documents must include a signed/notarized Contractor's Proposal Submittal, Bid Form, References, Contractor's license and insurance certificates, and Public Entity Criminal Affidavit. The Contractor shall submit electronic proposals only. Bidders must submit electronically only through Bonfire platform. When bidding electronically, only one copy should be submitted.

Proposals shall include the following:

- A signed and notarized Proposer's Contract Proposal.
- Current proof of insurance certificate.
- A list of references and minimum qualifications as outlined in Section V.
- One copy of bid electronically submitted to Bonfire platform.

The City is not responsible for any Addendums or other supplementary information that is not received due to non-submittal of the aforementioned information. Please refer back to the city website (http://www.stpetebeach.org/news-and-links/city-projects.html) for additional project information as it becomes available. The City reserves the right to decide whether to answer addendums or not. The City is not required to provide any additional information.

Proposers or persons wishing to submit a proposal on this project shall be licensed, and insured in accordance with the City's requirements

The City of St. Pete Beach reserves the right to reject any or all proposals or parts of proposals, or accept any proposal or part thereof deemed to be in the best interests to the City of St. Pete Beach.

Electronic proposals must be submitted by **9:00 AM on April 08, 2026 (Deadline),** clearly marked as: **"Civil On Call Construction Services."**

PRE-PROPOSAL MEETING
An optional pre-proposal meeting will be held on **March 18, 2026 at 10:00 AM EST** via Microsoft Teams conference/Teleconference. Please contact the City's Procurement Manager (purchasing@stpetebeach.org) for a meeting invitation and instructions.

WRITTEN REQUESTS FOR INTERPRETATIONS/CLARIFICATIONS
No oral interpretations will be made to any firms as to the meaning of the scope of work or any other

contract documents included in this **RFP.** All questions pertaining to the terms and conditions or scope of work of this Request for Proposal **(RFP)** must be sent in writing via email only to the City Procurement Manager (purchasing@stpetebeach.org) and shall be received no later than **10:00 AM EST on March 25, 2026.** Responses to questions may be handled as an Addendum if the response would provide clarification to the requirements of the **RFP**. All such Addenda shall become a part of the contract documents. The City will not be responsible for any other explanation or interpretation of the proposed **RFP** made or given prior to the award of the contract. The City will not respond to questions received after the specified deadline. The City reserves the right to respond to any and all questions but is not required to do so. If the Proposer discovered the opportunity through the online platform (Bonfire), do not submit questions through these platforms. **Only questions emailed directly to the City Procurement Manager will be answered.**

BEGINNING DATE
The Proposer shall, within ten (10) business days after receipt of the Notice of Award and before commencement of any operations hereunder, execute the Agreement. Additionally, the Proposer shall, within twenty (20) business days after receipt of the Notice of Award, provide all required documentation to the City.

COMPLETION OF WORK
The work will be completed on an as-needed basis. Each location that needs to be surveyed, repaired and/or worked on will constitute it's own "job". This will be a three (3) year initial contract with the option to be extended for two (2) additional one (1) year periods upon mutual consent of both parties. It is the intent of the City of St Pete Beach to award these services to more than one Contractor/Vendor.

COSTS INCURRED BY PROPOSERS
All expenses involved with the preparation and submission of proposals to the City, or any work performed in connection therewith, shall be borne solely by the Proposers. No payment will be made for any responses received or for any other effort required of or made by; the Proposer's prior to contract commencement.

ORAL PRESENTATION
The City may require an oral presentation of the proposal at the Evaluation Committee's discretion. This could also include a formal interview of any and all members of the Proposer's contract management staff.

CONFLICT OF INTEREST
The Proposer represents that it presently has no interest and shall acquire no interest, either direct or indirect, which would conflict in any manner with the performance or services required hereunder, as provided for in FL Stat. 112.311. The Proposer further represents that no person having any interest shall be employed for said performance.

The Proposer shall promptly notify the City's representative, in writing, by certified mail, of all potential conflicts of interest for any prospective business association, interest, or other circumstance, which may influence or appear to influence the contractor's judgment or quality of services being provided hereunder. Such written notification shall identify the prospective business association, interest or circumstance, the nature of work that the Proposer may undertake and request an opinion of the city as to whether the association, interest or circumstance would, in the opinion of the City, constitute a conflict of interest if entered into by the Proposer. The City agrees to notify the Proposer of its opinion by certified mail within thirty days of receipt of notification by the Proposer.

LATE PROPOSAL OR MODIFICATIONS
Modifications in writing received prior to the time set for the proposal submittal will be accepted. Proposal modifications received after the time set for the proposal submittal will not be considered.

RELATED PARTIES AND MULTIPLE PROPOSALS

Where two (2) or more related parties each submit a proposal or multiple proposals are received from (1) Proposer, for any such contract, such proposals shall be judged non-responsive. Related parties mean Proposers or the principles thereof, which have a direct or indirect ownership interest in another Proposer for the same contract or in which a parent company or the principles thereof where one (1) Proposer has a direct ownership interest in another Proposer for the same contract.

RIGHT TO AUDIT
The City of St. Pete Beach reserves the privilege of auditing a Proposer's record as such records relate to purchases or work between the City and said Proposer. Records should be maintained for three years from contract date.

VARIANCE FROM STANDARD TERMS & CONDITIONS
All standard terms and conditions stated throughout the RFP apply to this contract except as specifically stated. This should be fully understood by Proposers prior to submitting a proposal.

ASSIGNMENT
The Proposer shall perform this contract. No assignment or subcontracting shall be allowed without prior written consent of the City. If a Proposer intends to subcontract a portion of this work, the Proposer must disclose that intent in the proposal. In the event of a corporate acquisition and/or merger, the Contractor shall provide written notice to the City within thirty (30) business days of Proposer's notice of such action or upon the occurrence of said action, whichever occurs first. The right to terminate this contract, which shall not be unreasonably exercised by the City shall include but not be limited to, instances in which a corporate acquisition and/or merger represent a conflict of interest or are contrary to any local, state, or federal laws. Action by the City awarding a proposal to a firm that has disclosed its intent to assign or subcontract in its response to the RFP, without exception shall constitute approval for purpose of this Agreement.

LOBBYING Lobbying of Evaluation Committee members, City employees, or elected officials regarding request for proposals, request for qualifications, bids or contracts, during the pendency of bid award or bid protest, by the bidder/proposer/protestor or any member of the bidder's/proposer's/protestor's staff, an agent of the bidder/proposer/protestor, or any person employed by any legal entity affiliated with representing an organization that is responding to the request for proposal, request for qualification, bid or contract, or has a pending bid protest is strictly prohibited either upon advertisement or on a date established by the City and shall be prohibited until either an award is final or the protest is finally resolved by the City Manager or Procurement Manager; provided, however, nothing herein shall prohibit a prospective bidder/proposer from contacting City departments to address situations such as clarification and/or questions related to the procurement process. For purposes of this provision, lobbying activities shall include but not be limited to, influencing or attempting to influence action or non-action in connection with any requests for proposal, request for qualification, bid or contract through direct or indirect oral or written communication or an attempt to obtain goodwill of persons and/or entities specified in this provision. Such actions may cause any request for proposal, request for qualification, bid or contract to be rejected.

ADDITIONAL REQUIREMENTS
The City reserves the right, by change order, to unilaterally add or delete locations/services, either collectively or individually, at the City's sole option, at any time after award has been made as may be deemed necessary or in the best interest of the City. In such case, the Proposer will be required to provide or reduce services to this contract in accordance with the terms, conditions, and specifications.

SERVICES AGREEMENT
A written agreement incorporating the RFP and the successful proposal will be prepared by the City, signed by the successful Proposer, and presented to the City Commission for approval and signature.

INTEGRITY OF REQUEST FOR PROPOSAL DOCUMENTS
Proposers shall use the original RFP forms provided within the RFP and enter information in the spaces where a response is requested. Proposers may use an attachment as an addendum to the RFP forms if sufficient space is not available on the original form for the Proposer to enter a complete response. Any modifications or alterations to the original RFP documents by the Proposer, whether intentional or otherwise, will constitute grounds for rejection of the RFP. Any such modifications or alterations a Proposer wishes to propose must clearly be stated in the Proposer's RFP response and presented in the form of an addendum to the original RFP documents.

RESPONSIBILITY OF THE CITY MANAGER OR DESIGNEE
The term "City Manager or designee" wherever used in this Contract shall be the City of St. Pete Beach or its duly authorized representative. Notices of any change in the City Manager or designee shall be given in writing by the City to the Contractor. The City Manager or designee shall have full authority to interpret the contract and requirements and shall determine acceptance of the work under this Contract and every question relative to the fulfillment of the terms and provisions therein. It shall be the duty of the City Manager or designee to enforce the contract terms in a fair and unbiased manner.
If a variation from any requirements is allowed, the City Manager or designee shall grant the same in writing with the reasons for his action outlined, and such action will not invalidate or change the Contract in any other manner.

EXAMINATION OF SITE
Proposer shall carefully examine project site and be familiar with the work required for the project, investigate all site conditions that may affect execution of work as detailed in the construction documents. Contact the City's Procurement Manager or their designee for changes or alterations before proceeding.

ASSURANCES
The responding Proposer shall provide a statement of assurance that the Proposer is not presently in violation of any statutes or regulatory rules that might have an impact on the firm's operations. All applicable laws and regulations of the State of Florida, and ordinances and regulations of the City of St. Pete Beach will apply.

ASSIGNMENT AND TRANSFER OF CONTRACT
The Proposer shall not assign or transfer this Agreement or any part thereof or any interest therein without consent in writing of the City and the Proposer's Surety, and any such assignment or transfer without such written consent shall be null and void.

SUBCONTRACTS
The Proposer shall not subcontract this Agreement or any part thereof or any interest therein without consent in writing of the City and the Proposer's Surety. Any Subcontractor approved by the City will be subject to the same standards and qualifications as stated in this Contract.

PAYMENT
Payment shall be made to the Proposer for work performed under this Contract for the quantities of work as determined in accordance with Payments for Work Completed and Payments Withheld of this Contract. Payment for extra work will be made in accordance with the Changes in Work, Contract Amount, and Contract Time sections below.

PERIOD OF PERFORMANCE
The target completion for the base Scope of Services is January 2027, corresponding to delivery of the Design-Build Readiness Package. The City reserves the right, at its sole discretion and subject to funding

availability, to amend this Agreement to extend the Consultant's services through final (100%) design. Any additional services shall be authorized by written amendment and negotiated in accordance with the Consultants' Competitive Negotiation Act (Section 287.055, Florida Statutes).

CHANGES IN THE WORK

Without invalidating the Contract, the City may, at any time or from time to time, order additions, deletions or revisions in the work authorized by written Change Orders or directives. Upon receipt of a Change Order, the Proposer will proceed with the work involved. All such work shall be executed under the applicable conditions of the Contract documents. If any Change Order causes an increase or decrease in the Contract Amount or any extension or shortening of the Contract Time, an equitable adjustment will be made.

Additional Work performed by the Proposer without authorization of a Change Order will not entitle them to an increase in the Contract Amount or any extension of the Contract Time, except in the case of an emergency (subject to approval by City Manager or designee).

It is the Proposer's responsibility to notify their Surety of any changes affecting the general scope of the Work or change of the Contract Amount and the amount of the applicable bonds shall be adjusted accordingly, and an amended bond document furnished to the City. In the event the City directs the Proposer to make a change in the Work, and if the City and the Proposer do not arrive at a mutually acceptable increase or decrease in the Contract Amount, the Proposer shall not use any such lack of mutual acceptance as a basis or cause to stop or otherwise delay the progress or the execution and completion of any of the work ordered, directed or required pursuant to the Contract Documents.

If the Proposer believes an event or situation has occurred which justifies a change in the Contract Amount or Contract Time, they shall deliver a written notice to the City Manager or designee. Each such written notice shall be delivered promptly and no later than fifteen (15) business days after the Proposer first discovered the occurrence. The Proposer shall be deemed to have waived the right to collect any and all costs incurred more than fifteen (15) business days prior to the date of delivery of the written notice and shall be deemed to have waived the right to seek an extension of the Contract Time with respect to any delay in the Progress Schedule which accrued more than fifteen (15) business days prior to the date of delivery of the written notice.

Any such notice shall include sufficient detail to explain the basis of entitlement to a claim for an adjustment to the Contract Amount of Contract Time. When requested by the City Manager or designee, the Proposer shall furnish any additional information and details as may be required to determine the facts or allegations involved, which shall be provided within fifteen (15) business days of the request unless a longer time period is allowed by the City Manager or designee.

The Proposer shall prepare proposals detailing proposed adjustments to Contract Amount and/or Contract Time and submit them to the City Manager or designee within fifteen (15) business days of the City's issuance of a proposed Change Order or the Proposer's submitting a written notice of a change or claim for an adjustment to the Contract Amount or Contract Time. Proposer's proposals shall be irrevocable for a period of at least sixty (60) business days after receipt by the City. Any delay in the submittal of a complete, adequate and acceptable proposal will not justify an increase in Contract Amount or Contract Time. Proposer agrees that it shall give the City access to any and all of Proposer's and Subcontractors' books, records and other materials relating to proposed Change Orders and other claims for adjustment to Contract Amount or Contract Time.

CHANGE OF CONTRACT AMOUNT

The Contract Amount constitutes the total compensation payable to the Proposer for performing the Work. All duties, responsibilities and obligations assigned to or undertaken by the Proposer shall be at his expense

without change in the Contract Amount. The Contract Amount may only be changed by written Change Order issued by the City. Any claim for an increase in the Contract Amount shall be in writing and delivered to the City Manager or designee within fifteen (15) business days of the occurrence of the event giving rise to the claim.

All claims for adjustment in the Contract Amount shall be determined by the City Manager or designee. However, no claim for an adjustment to the Contract Amount will be considered for unforeseeable causes that were beyond the fault or negligence of the Proposer or his Subcontractors or supplier such as acts of God, floods, riots, etc. This restriction does not restrict submission of claims for additional Contract Time due to events of this nature. Any change in the Contract Amount shall be incorporated in a Change Order.

Proposer proposals or claims shall cover all aspects of the Work involved and shall be fully documented and itemized as to all costs, quantities and charges for overhead and profit. Amounts for Subcontractors or Suppliers at any tier shall be similarly supported. When determining Subcontractors' costs, the methods to be used shall be those used for the Proposer's costs, except that the term "Subcontractor" shall replace the term "Proposer," context permitting.

The value of any Work covered by a Change Order or of any claim for an increase or decrease in the Contract Amount where the Work involved is covered by unit prices contained in the Contract Documents shall be determined by application of unit prices to the quantities of the items involved. If the quantities originally contemplated are so changed in a proposed Change Order, that application of the Unit Prices to the quantities proposed will cause substantial inequity to the City or the Proposer, the applicable unit price(s) shall be equitably adjusted by mutual agreement.

If the value of work covered by a Change Order cannot be established or mutually agreed to utilizing previously established unit rates, the value shall be determined by the City on the basis of an estimate of the out-of-pocket cost and percentages that are acceptable to the City for overhead and profit.

In such case, the Proposer will submit in the form prescribed by the City an itemized cost breakdown together with supporting data.

The amount of credit to be allowed by the Proposer to the City for any such change which results in a net decrease in cost, will be the amount of the actual net decrease as determined by the City. When both additions and credits are involved in any one change, the combined overhead and profit shall be figured on the basis of the net increase, if any.

CHANGE OF CONTRACT TIME

The Contract Time may only be changed by written Change Order. Any claim for an extension in the Contract Time shall be in writing and include an analysis of the Progress Schedule as further described in the Specifications and shall be delivered to the City Manager or designee within fifteen (15) business days of the occurrence of the event giving rise to the claim. All claims for adjustment in the Contract Time shall be determined by the City Manager or designee. Any change in the Contract Time resulting from any such claim shall be incorporated in a Change Order. The Contract Time may be extended for an amount equal to time lost due to unforeseeable causes beyond the control of the Proposer (and his Subcontractors and Suppliers) if he makes a claim therefrom. Such delays shall include, but not be restricted to, acts or neglect by any separate Proposer employed by the City; fires; floods; labor disputes; epidemics; or acts of God.

All time limits stated in the Contract Documents are of the essence to the Contract. The stated time limits are agreed to be adequate to complete the work, including the procurement, manufacture and delivery of all material and equipment required, and account for any and all potential impact, delays, disruptions and costs that may be expected.

PAYMENTS FOR WORK COMPLETED
All payments under this agreement shall comply with the requirements of Florida Statutes, Section 215.422, commonly referred to as the "Prompt Payment Law." This includes timely processing of invoices and adherence to statutory interest provisions for late payments. The Contractor shall submit detailed invoices for services rendered under this agreement. Each invoice must include: Purchase Order or Contract Number, Description of services provided, Dates of service, Total amount due. Payment will be made within 45 days of receipt of a proper invoice and acceptance of deliverables, as required by Florida law. If payment is not made within the statutory timeframe, interest penalties will apply in accordance with Section 215.422, Florida Statutes. Payments will be issued via electronic funds transfer (EFT) unless otherwise agreed in writing. Contractor must provide accurate banking information to facilitate EFT.

PAYMENTS WITHHELD
The City Manager or designee may withhold, or, on account of subsequently discovered evidence, nullify the whole or part of any estimate to such extent as may be necessary to protect the City from loss on account of:

a) Defective work not remedied

b) Claims and/or liens filed or reasonable evidence indicating probable filing of claims

c) Failure of the Proposer to make payments properly to Subcontractors or for labor

d) A reasonable doubt that the Contract can be completed for the balance then unpaid

e) Damage to another Proposer

f) Failure of the Proposer to keep their work progressing in accordance with their time schedule

FINAL PAYMENTS
Upon the completion and acceptance of the work, the City Manager or designee shall issue a certificate that designates that the whole work provided for in this Contract has been completed and accepted by him under the conditions and the terms thereof and shall make the final estimate of the work. After issuance of the certificate, the entire balance found to be due the Proposer, including said retained percentage by the City in accordance with existing state laws as may be retained lawfully by said City, shall pay excepting such sums to the Proposer.

Before the approval of the final payment, the Proposer shall submit evidence satisfactory to the City that states that all payrolls, materials, bills and outstanding indebtedness in connection with this Contract have been paid.

LIENS
If at any time there shall be evidence of any lien or claim for which the City might become liable and which is chargeable to the Proposer, the City shall have the right to retain out of any payment then due or thereafter to become due, an amount sufficient for complete indemnification against such lien or claim. In the event the City has already paid to the Proposer all sums due under this contract or the balance remaining unpaid is insufficient to protect the City, the Proposer and his Surety shall be liable to the City for any loss so sustained.

RESPONSIBILITY OF THE CITY MANAGER OR DESIGNEE
The term "City Manager or designee" wherever used in the Contract shall be the City of St. Pete Beach or its duly authorized representative. Notices of any change in the City Manager or designee shall be given in writing by the City to the Proposer. The City Manager or designee shall have full authority to interpret the Plans and Specifications and shall determine the amount, quality, and acceptance of the work and supplies

to be paid for under the Contract and every question relative to the fulfillment of the terms and provisions therein. It shall be the duty of the City Manager or designee to enforce the Plans and Specifications in a fair and unbiased manner. If a variation from any requirements is allowed the City Manager or designee shall grant the same in writing with the reasons for his action outlined, and such action will not invalidate or change the Contract in any other manner.

LICENSES AND PERMITS

The Proposer shall obtain and pay for all necessary City licenses and work permits and shall faithfully comply with all laws, ordinances and regulations, (Federal, State or local) which may be applicable to the operations to be conducted hereunder, except for those permits obtained by the City. Notwithstanding the provisions above, the Proposer is responsible for non-compliance of all permit requirements, including all fines resulting from Proposer's non-compliance of said requirements.

Chapter II, Section II-4, "Registration of Licenses Obtained From Other Municipalities:" "Persons, partnerships, corporations, or other business entities doing business with the City who are not required to obtain a City occupational license, but who must have either a State or County or Municipal occupational license from another municipality, shall register such occupational license with St. Pete Beach Community Development Department. The City may charge a fee for such registration." The Proposer shall be responsible for obtaining all City, County, State and Federal permits required by those government agencies and must provide documentation of receipt of those permits prior to project commencement. This shall include a notice to commence work letter and the applicable fee, if required. Any sub-contractor hired by the Proposer awarded the project, MUST also register their license with the City.

LABOR PROVISIONS

The Proposer and his Subcontractors shall discharge, whenever ordered to do so by the City Manager or designee, any employee who is disorderly or whose conduct in the opinion of the City Manager or designee is detrimental to the prosecution of the work. No person whose age or physical condition is such as to make this employment dangerous to his/her health and safety or to the health and safety of others shall be employed on the work, and in no event shall any persons under the age of sixteen (16) years be employed. The State of Florida prevailing wage law requires that the Proposer shall fully comply with all provisions contained in Section 215.19, "Schedule of Prevailing Wage Rates for Specified Public Construction." The wage rates set forth by such determination shall apply to this project.

INSURANCE

The Proposer shall procure and maintain at his/her own expense, during the life of the Contract, liability insurance as hereinafter specified. All such insurance shall be subject to the approval of the City for adequacy of protection and shall include a provision preventing cancellation without twenty (20) business days prior notice to the City in writing. The City shall be included as an additional insured on all liability insurance. The liability insurance required is as follows: Proposer's General Public Liability and Property Damage Insurance issued to the Proposer and protecting the Proposer from all claims for personal injury, including death, and all claims for destruction of or damage to property, arising out of or in connection with any operations under this Contract, whether such operations be by the Proposer or by any Subcontractor hired by the Proposer or anyone directly or indirectly employed by the Proposer or hired by the Proposer.

The successful Proposer shall supply and maintain insurance which defends, indemnifies and holds harmless the City of St. Pete Beach, its officers, employees and agents from and against any and all liability, damage claims, demands, costs, judgments, fees, attorney's fees or loss arising directly out of acts or omissions hereunder by the Proposer or third party under the direction or control of the Proposer. Such general and excess liability coverage shall be primary to any other coverage carried by the City of St Pete Beach. Proposer must furnish the City with Certificate of Insurance prior to commencement of work. An

approved Certificate of Insurance furnished by the Proposer's carrier to guarantee the Proposer being insured with the City of St Pete Beach must be named as a certificate holder for this contract. The following minimum coverage:

- Professional Liability Insurance $2,000,000 each occurrence.
- Commercial General Liability Insurance $1,000,000.00.
- Comprehensive General Liability Insurance of $1,000,000.00 each occurrence.
- Personal Injury for $1,000,000.00 each occurrence.
- Automobile Liability $1,000,000.00.
- General Workers Compensation Insurance as required by Florida law.
- Longshore Harbor Workers Compensation Insurance

PROTECTION OF WORK AND PROPERTY
The Proposer shall continuously maintain adequate protection of all their work and materials from damage or theft and shall protect the City's property and all adjacent property from injury or loss arising in connection with activities under their Contract. The Proposer shall make good any such damage, injury, or loss, except such as may be caused by agents or employees of the City.

The Proposer shall take, use, provide, and maintain all necessary precautions, safeguards, and protection to prevent accidents, or injury to persons or property on, about, or adjacent to the site of the work. Should the situation arise that physical security is needed the Proposer will provide security on off days and holidays. The Proposer shall be responsible for all charges incurred with such action.

The Proposer shall post danger signs warning against any hazards created by the work being done under their Contract. They shall designate a responsible member of their organization on the work, whose duty shall be the prevention of accidents, and the name of the person so designated shall be reported to the City Manager or designee and City in writing. In an emergency affecting the safety of life, or of the work or adjoining property, the Proposer, without special instruction or authorization from the City Manager or designee, or City, is hereby permitted to act, at their own discretion, to prevent such threatened loss or injury, and they must take such action if so instructed or authorized by the City Manager or designee. The Proposer shall also protect adjacent property as required by law.

PROPOSAL REVIEW AND CONTRACT AWARD
Failure to submit all documents requested at the time of proposal may deem the Proposer's proposal ineligible for award. The City of St. Pete Beach reserves the right to reject any or all proposals or parts of proposals. The contract shall be awarded by written notice to the responsible and responsive Contractor whose proposal is determined in writing to be the most advantageous to the City, taking into consideration the price and other criteria set forth in this request for proposals. The City may waive any informality.

LOCAL, STATE AND FEDERAL COMPLAINCE REQUIREMENTS
The laws of the State of Florida do apply to any purchase made under this Request for Proposal. Proposers shall comply with all local, state, and federal directives, orders and laws as applicable to their proposal and subsequent contracts include but not limited to Equal Employment Opportunity, Minority Business Enterprise, and OSHA as applicable to this contract.

Compliance with Fla. Stat. 448.095:

- Proposer agrees to comply with all applicable portions of Fla. Stat. 448.095. Proposer must use the

U.S. Department of Homeland Security's E-Verify System, hhttps://e-verify.uscis.gov/emp, to verify the employment eligibility of all employees hired on or after January 1, 2021 during the term of this Agreement.

- Subcontractors (i) Proposer shall also require all subcontractors performing work under this Agreement to use the E-Verify system for any employees they may hire during the term of this Agreement. (ii) Subcontractors shall provide Proposer with an affidavit stating the subcontractor does not employ, contract with, or subcontract with an unauthorized alien, as defined by Fla. Stat. 448.095 (iii) Proposer shall provide a copy of such affidavit to the City upon receipt and shall maintain a copy for the duration of the Agreement.

- Proposer must provide evidence of compliance with Fla. Stat. 448.05 by January 1, 2021. Evidence may consist of, but is not limited to, providing notice of Proposer's E-Verify number.

- Failure to comply with this provision is a material breach of the Agreement, and the City may choose to terminate the Agreement at its sole discretion. Proposer may be liable for all costs associated with the City securing the same services, inclusive, but not limited to, higher costs for the same services and proposal costs (if necessary). Any challenge to termination under this provision must be filed in the Circuit Court no later than 20 calendar days after the date of termination. If this agreement is terminated for a violation of the statute by the Proposer, the Proposer may not be awarded a public agreement for a period of 1 year after date of termination.

RESERVES THE RIGHT

The City reserves the right to accept or reject any and/or all proposals, to waive irregularities and technicalities, and to request re-submission. If only one proposal is received by the proposal date and time listed, the proposal may or may not be rejected by the City depending upon proposal review and the needs of the City.

The City reserves the right to select a firm with or without additional interviews and may decide to select any of the firms submitting proposals. The City reserves the right to award the contract to a responsible proposer submitting a responsible proposal, with a resulting negotiated agreement which is most advantageous and in the best interest of the City.

Proposers, Proposers, their agents, and associates shall not contact or solicit any City Commission member, City employee, or official regarding this RFP during any phase of the proposalding process. Failure to comply with the provision may result in disqualification of the Proposer, at the option of the City. Only that individual listed, or an approved designee, as the contact person for this RFP shall be contacted.

SUBMITTAL WITHDRAWAL

After submittals are opened, corrections or modifications to submittals are not permitted, but a responding firm may be permitted to withdraw an erroneous submittal prior to the award by the City Commission, if the following is established:

- That the responding firm acted in good faith in submitting the submittal;
- That in preparing the submittal there was an error of such magnitude that enforcement of the submittal would work severe hardship upon the respondent;
- That the error was not the result of gross negligence or willful inattention on the part of the respondent;
- That the error was discovered and communicated to the City within twenty-four (24) hours of submittal opening, along with a request for permission to withdraw the submittal; or
- The responding firm submits documentation and an explanation of how the error was made.

CONE OF SILENCE
Respondents to this solicitation or persons acting on their behalf may not contact, between the release of the solicitation and the end of the 72-hour period following the agency posting the notice of intended award, excluding Saturdays, Sundays, and state holidays, any employee or officer of the executive or legislative branch concerning any aspect of this solicitation, except in writing to the procurement officer or as provided in the solicitation documents. Violation of this provision may be grounds for rejecting a response.

TERMINATION
The resulting contract may be canceled by the City when:

- Sufficient funds are not available to continue its full and faithful performance of this contract.
- There is sub-standard or non-performance of contract.
- The City wishes to terminate at any time and for any reason, upon giving thirty (30) days prior written notice to the other party.

The resulting contract may be canceled by either party in the event of substantial failure to perform in accordance with the terms by the other party through no fault of the terminating party.

FISCAL NON-FUNDING

If funds for the requested services described herein are not appropriated via the annual budget adoption process, the City reserves the right to cancel this Agreement immediately upon written notice to the vendor.

PROJECT RECORDS
The awarded firm shall maintain auditable records concerning the procurement to account for all receipts and expenditures, and to document compliance with the Contract. These records shall be kept in accordance with generally accepted accounting methods, and the City of St. Pete Beach reserves the right to determine the record-keeping method in the event of non-conformity. These records shall be maintained for three (3) years after final payment has been made and shall be readily available to City personnel with reasonable notice, and to other persons in accordance with the Florida Public Disclosure Statutes. Additionally, the awarded firm shall abide by and comply with Florida Statutes regarding public records. Specifically, the firm shall be aware of the provisions found in Section 119.0701, Florida Statutes.

Upon completion of the project, all reports, studies, recommendations, forms, and other project specific information will need to be submitted in paper and in an electronic file format (.PDF, .JPEG) on CD or USB storage device.

V. REFERENCES & MINIMUM QUALIFICATIONS

Provide at least three (3) or more professional, business references with which you have contracted to provide similar services in the past five (5) years. Include the name of the person, its organization, telephone number, fax number, and e-mail address. Include any governmental agencies, with the same contact and descriptive information for which you have provided similar service within the past five (5) years.

Provide a brief description of the history and capabilities of the firm. Describe the types of projects or services the firm performs/has performed and the dollar value of each. Provide information regarding your firm's ability to complete this project. Demonstrate that the firm's personnel have experience with similar projects.

Identify all unresolved and ongoing claims and disputes against your firm in excess of $500,000. Include any claims against the principals of your firm or any claims your company may have against a third party. Provide a history of litigation, including the outcomes, for the past five (5) years.

The responding firm shall provide a statement of assurance that the firm is not presently in violations of any statutes or regulatory rules that might have an impact on the firm's operations. All applicable laws and regulations of the State of Florida and ordinances and regulations of the City of St. Pete Beach will apply.

Provide the overall bonding capacity for the company and provide a history of any claims against the Proposer's previous bonds for the past five (5) years.

The City shall be the sole final judge of qualifications of Proposer to perform service and reserves the exclusive right to accept or reject any proposal as it deems to be in the best interests of the City. The City reserves the right to make such investigation, as it deems necessary, to determine the ability of any proposer to perform the work or service requested. Failure to comply with the requirements of this section may be grounds for rejecting a response.

VI. CONTRACTOR'S PROPOSAL SUBMITTAL

The company that is submitting a proposal declares that it has extensive experience providing Task Work Order driven Civil On-Call Construction Services.

The undersigned, as Proposer, hereby declares that the only person or persons interested in the Proposal as principal or principals are named herein, and that no person other than herein mentioned has any interest in the Proposal or in the Agreement to be entered into; that this Proposal or Agreement is made without connection with any other person, company, or parties making a Proposal; and that it is in all respects fair and in good faith without collusion or fraud.

The Proposer further declares that they have examined the site of the work and informed themselves fully in regard to all conditions pertaining to the place where the work is to be done; that they have examined the Plans and Specifications for the work and Contract Documents relative thereto, and have read all special provisions furnished prior to the opening of proposals; and that they have satisfied themselves relative to the materials to be supplied and work to be performed.

The Proposer proposes and agrees, if the Proposal is accepted, to contract with the City of St. Pete Beach, Florida, in the form of an Agreement specified for **"Civil On Call Construction Services"** in St. Pete Beach, Florida, in full and complete accordance with the shown, noted, described, and reasonably intended requirements of the Plans, Specifications, and Contract Documents, to the full and entire satisfaction of the City of St. Pete Beach, Florida.

The successful Proposer shall be required to utilize the template Agreement in this Request for Proposals (RFP) and any questions regarding the Agreement must be addressed during the RFP process before submittal. The City reserves the right to respond or not respond to questions in the form of an addendum.

The Proposer proposes to furnish all materials, equipment, labor, and perform the work submitted in their proposal schedule for the City of St. Pete Beach **"Civil On Call Construction Services."**

COMPANY:_____ DATE: _____

ADDRESS:_____ PHONE:_____

PROPOSER: _____ NAME: _____

(SIGNATURE) (PRINT NAME & TITLE)

STATE OF FLORIDA
COUNTY OF _____

The foregoing instrument was sworn to (or affirmed), subscribed, and acknowledged before me by means of ☐ physical presence or ☐ online notarization, this _____ day of _____, 2026, by_____, who is personally known to me or has produced _____ as identification.

(SEAL)

_____
Notary Public – State of Florida

_____
(Print, Type, Stamp, or Commissioned Name of Notary Public)

SUBMIT PROPOSAL TO: Electronically via Bonfire only

VII. PUBLIC ENTITY CRIMINAL AFFIDAVIT

SWORN STATEMENT – PUBLIC ENTITY CRIMES

PURSUANT TO § 287.133 (3)(a), FLORIDA STATUTES, ON PUBLIC ENTITY CRIMES
THE FORM MUST BE SIGNED AND SWORN TO IN THE PRESENCE OF A NOTARY PUBLIC OR OTHER OFFICIAL AUTHORIZED TO ADMINISTER OATHS.

1. This sworn statement is submitted to: City of St. Pete Beach
by: _____
(Print individual's name and title)

for: _____
(Print name of entity submitting sworn statement)

at: _____
(Business address)

and (if applicable), its Federal Employer Identification Number (FEIN):

_____
(FEIN)
or, if the entity has no FEIN, include the Social Security Number:

_____
(SSN)

by the individual signing this sworn statement:
_____ (Signature)

2. I understand that a "public entity crime" as defined in § 287.133 (1)(g), Fla. Stat., means a violation of any State or Federal law by a person with respect to and directly related to the transaction of business with any public entity or with an agency or political subdivision of any other state or of the United States including, but not limited to, any proposal or contract for goods or services, any lease for real property, or any contract for the construction or repair of a public building or public work, involving antitrust, fraud, theft, bribery, collusion, racketeering, conspiracy, or material misrepresentation.

3. I understand that "convicted" or "conviction" as defined in § 287.133 (1)(b), Fla. Stat., means a finding of guilt or a conviction of public entity crime with or without an adjudication of guilt in any Federal or State trial court of record relating to charges brought by indictment or information after July 1, 1989, as a result of a jury verdict, non-jury trial, or entry of a plea of guilty or nolo contendere.

4. I understand that an "affiliate" as defined in § 287.133 (1)(a), Fla. Stat., means:
   a. A predecessor or successor of a person convicted of a public entity crime or
   b. An entity under the control of any natural person who is active in the management of the entity and who has been convicted of a public entity crime. The term "affiliate" includes those officers, directors, executives, partners, shareholders, employees, members, and agents who are active in the management of an affiliate. The ownership by one (1) person of shares constituting a controlling interest in another person or a pooling of equipment or income among persons when not for fair market value under the arm's length agreement, shall be a prima facie case that one (1) person controls another person. A person who knowingly enters into a joint venture with a person who has been convicted of a public crime in Florida during the preceding thirty-six (36) months shall be considered an affiliate.

5. I understand that a "person" as defined in Section 287.133 (1)(e), Fla. Stat., means any natural person or any entity organized under the laws of any state or of the United States with the legal power to enter into a binding contract and which proposals or applies to proposal on contracts let by a public entity, or which otherwise transacts or applies to transact business with a public entity. The term "person" includes those officers, directors, executives, partners, shareholders, employees, members, and agents who are active in management of an entity.

6. Based on information and belief, the **statement which I have marked below is true** in relation to the entity submitting this sworn statement (indicate which statement applies).

☐ Neither the entity submitting this sworn statement, nor any of its officers, directors, executives, partners, shareholders, employees, members, or agents who are active in the management of the entity nor any affiliate of the entity has been charged with and convicted of a public entity crime subsequent to July 1, 1989.

☐The entity submitting this sworn statement or one (1) or more of its officers, directors, executives, partners, shareholders, employees, members, or agents who are active in the management of the entity or an affiliate of the entity has been charged with and convicted of a public entity crime subsequent to July 1, 1989.

☐The entity submitting this sworn statement or one (1) or more of its officers, directors, executives, partners, shareholders, employees, members, or agents who are active in the management of the entity or an affiliate of the entity has been charged with and convicted of a public entity crime subsequent to July 1, 1989. However, there has been a subsequent proceeding before a Hearing Office of the State of Florida, Division of Administrative Hearings and the Final Order entered by the Hearing Officer determined that it was not in the public interest to place the entity submitting this sworn statement on the convicted vendor list (attach a copy of the final order).

I UNDERSTAND THAT THE SUBMISSION OF THIS FORM TO THE CONTRACTING OFFICE FOR THE PUBLIC ENTITY IDENTIFIED IN PARAGRAPH 1 ABOVE IS FOR THE PUBLIC ENTITY ONLY AND THAT THIS FORM IS VALID THROUGH DECEMBER 31 OF THE CALENDAR YEAR IN WHICH IT IS FILED. I ALSO UNDERSTAND THAT I AM REQUIRED TO INFORM THE PUBLIC ENTITY PRIOR TO ENTERING INTO A CONTRACT IN EXCESS OF THE THRESHOLD AMOUNT PROVIDED IN SECTION 287.017, FLORIDA STATUTES, FOR CATEGORY TWO OF ANY CHANGE IN THE INFORMATION CONTAINED IN THIS FORM.

STATE OF FLORIDA
COUNTY OF _____

The foregoing instrument was sworn to (or affirmed), subscribed, and acknowledged before me by means of ☐ physical presence or ☐ online notarization, this _____ day of _____, 2026, by_____, who is personally known to me or has produced _____ as identification.

(SEAL)

_____
Notary Public – State of Florida

_____
(Print, Type, Stamp, or Commissioned
Name of Notary Public)

VIII. NON-COLLUSION AFFADAVIT

STATE OF _____ COUNTY OF _____

I state that **I**_____ of _____,
(Name and Title) (Name of Firm)

I am authorized to make this affidavit on behalf of my firm and its owner, directors and officers. I am the person responsible in my firm for the price(s) and amount(s) of this Response, and the preparation of the Response. I state that:

1. The price(s) and amount(s) of this Response have been arrived at independently and without consultation, communication or agreement with any other Provider, potential provider, Proposal, or potential Proposal.
2. Neither the price(s) nor the amount(s) of this Response, and neither the approximate price(s) nor approximate amount(s) of this Response, have been disclosed to any other firm or person who is a Provider, potential Provider, Proposal, or potential Proposal, and they will not be disclosed before Proposal opening.
3. No attempt has been made or will be made to induce any firm or persons to refrain from submitting a Response for this contract, or to submit a price(s) higher that the prices in this Response, or to submit any intentionally high or noncompetitive price(s) or other form of complementary Response.
4. The Response of my firm is made in good faith and not pursuant to any agreement or discussion with, or inducement from, any firm or person to submit a complementary or other noncompetitive Response.
5. _____, its affiliates, subsidiaries, officers, director, and employees (Name of Firm) are not currently under investigation, by any governmental agency and have not in the last three years been convicted or found liable for any act prohibited by State or Federal law in any jurisdiction, involving conspiracy or collusion with respect to Proposal, on any public contract, except as follows:

I state that I and the named firm understand and acknowledge that the above representations are material and important, and will be relied on by the State of Florida for which this Response is submitted. I understand and my firm understands that any misstatement in this affidavit is, and shall be treated as, fraudulent concealment from the State of Florida of the true facts relating to the submission of responses for this contract.

Name of Organization:_____ Signed By: _____

Print Name:_____

The foregoing instrument was sworn to (or affirmed), subscribed, and acknowledged before me by means of ☐ physical presence or ☐ online notarization, this _____ day of _____, 2026, by _____, who is personally known to me or has produced _____ as identification.

(SEAL)

_____
Notary Public – State of Florida

_____
(Print, Type, Stamp, or Commissioned
Name of Notary Public)

Bid Form for City of St Pete Beach
On-Call Civil Construction Services
Request for Proposal

Specifications for the numbered pay items can be found in the current FDOT "Standard Specifications for Road and Bridge Construction".
Bid quantities are for comparison purposes only. This contract consists of various projects which are not yet defined and no quantities are guaranteed.

Pay Item No.	Item Description	Units	Est. Quantity	Unit Price	Amount
0101 1 (2501-5000)	MOBILIZATION (PER WORK ASSIGNMENT/LOCATION) - $2,501 TO $5,000	LS	1		$0.00
0101 1 (5501-25000)	MOBILIZATION (PER WORK ASSIGNMENT/LOCATION) - $5,001 TO $25,000	LS	1		$0.00
0101 1 (25001-50000)	MOBILIZATION (PER WORK ASSIGNMENT/LOCATION) - $25,001 TO $50,000	LS	1		$0.00
0101 1 (50001-150000)	MOBILIZATION (PER WORK ASSIGNMENT/LOCATION) - $50,001 TO $150,000	LS	1		$0.00
0101 1 (150001-250000)	MOBILIZATION (PER WORK ASSIGNMENT/LOCATION) - $150,001 TO $250,000	LS	1		$0.00
0101 1 (250001-350000)	MOBILIZATION (PER WORK ASSIGNMENT/LOCATION) - $250,001 TO $350,000	LS	1		$0.00
0101 1 (350001-500000)	MOBILIZATION (PER WORK ASSIGNMENT/LOCATION) - $350,001 to $500,000	LS	1		$0.00
0101 1 (500001+)	MOBILIZATION (PER WORK ASSIGNMENT/LOCATION) - $500,001 or more	LS	1		$0.00
0101 1 (2501-5000)	EMERGENCY MOBILIZATION (PER WORK ASSIGNMENT/LOCATION) - $2,501 TO $5,000	LS	1		$0.00
0101 1 (5501-25000)	EMERGENCY MOBILIZATION (PER WORK ASSIGNMENT/LOCATION) - $5,001 TO $25,000	LS	1		$0.00
0101 1 (25001-50000)	EMERGENCY MOBILIZATION (PER WORK ASSIGNMENT/LOCATION) - $25,001 TO $50,000	LS	1		$0.00
0101 1 (50001-150000)	EMERGENCY MOBILIZATION (PER WORK ASSIGNMENT/LOCATION) - $50,001 TO $150,000	LS	1		$0.00
0101 1 (150001-250000)	EMERGENCY MOBILIZATION (PER WORK ASSIGNMENT/LOCATION) - $150,001 TO $250,000	LS	1		$0.00
0102 1	MAINTENANCE OF TRAFFIC	Lump Sum (LS) cost to be assigned for each Task Order and shall not exceed 10% of the proposed construction cost.			
0102 3	COMMERCIAL MATERIAL FOR TEMPORARY DRIVEWAY MAINTENANCE	CY	50		$0.00
0102 14	TRAFFIC CONTROL OFFICER	HR	500		$0.00
0102 60	WORK ZONE SIGN	ED	6000		$0.00
0102 61	BUSINESS SIGN	EA	5		$0.00
0102 71 11	BARRIER WALL, TEMPORARY, F&I, CONCRETE	LF	200		$0.00
0102 71 13	BARRIER WALL, TEMPORARY, F&I, LOW PROFILE, CONCRETE	LF	200		$0.00
0102 71 14	BARRIER WALL, TEMPORARY, F&I, TYPE K	LF	200		$0.00
0102 71 21	BARRIER WALL, TEMPORARY, RELOCATE, CONCRETE	LF	200		$0.00
0102 71 23	BARRIER WALL, TEMPORARY, RELOCATE, LOW PROFILE, CONCRETE	LF	200		$0.00
0102 71 24	BARRIER WALL, TEMPORARY, RELOCATE, TYPE K	LF	200		$0.00
0102 73	TEMPORARY GUARDRAIL	LF	20		$0.00

0102 74 1	CHANNELIZING DEVICE- TYPES I, II, DI, VP, DRUM, OR LCD	ED	15000		$0.00
0102 74 2	CHANNELIZING DEVICE, TYPE III, 6'	ED	1000		$0.00
0102 74 7	CHANNELIZING DEVICE- PEDESTRIAN LCD (LONGITUDINAL CHANNELIZING DEVICE)	LF	1000		$0.00
0102 75 1	TEMPORARY SEPARATOR, F&I REMOVE	LF	500		$0.00
0102 75 2	TEMPORARY SEPARATOR, F&I REMAIN	LF	500		$0.00
0102 75 3	TEMPORARY SEPARATOR, INSTALL	LF	500		$0.00
0102 75 4	TEMPORARY SEPARATOR, RELOCATE	LF	500		$0.00
0102 75 5	TEMPORARY SEPARATOR, REMOVE	LF	500		$0.00
0102 76	ARROW BOARD / ADVANCE WARNING ARROW PANEL	ED	250		$0.00
0102 78	TEMPORARY RETROREFLECTIVE PAVEMENT MARKER	EA	50		$0.00
0102 89 1	TEMPORARY CRASH CUSHION, REDIRECTIVE OPTION	LO	5		$0.00
0102 99	PORTABLE CHANGEABLE MESSAGE SIGN, TEMPORARY	ED	600		$0.00
0102 104	TEMPORARY SIGNALIZATION AND MAINTENANCE, INTERSECTION	ED	100		$0.00
0102 107 1	TEMPORARY TRAFFIC DETECTION AND MAINTENANCE, INTERSECTION	ED	100		$0.00
0102 150 1	PORTABLE REGULATORY SIGN	ED	50		$0.00
0102 150 2	RADAR SPEED DISPLAY UNIT	ED	50		$0.00
0102 911 1	PAVEMENT MARKING REMOVABLE TAPE, WHITE OR BLACK, SKIP	LF	500		$0.00
0102 911 2	PAVEMENT MARKING REMOVABLE TAPE, WHITE, BLACK, SOLID	LF	500		$0.00
0102 911 3	PAVEMENT MARKING REMOVABLE TAPE, WHITE OR BLACK, OTHER	SF	25		$0.00
0102 912 1	PAVT MARKING REMOVABLE TAPE, YELLOW, SKIP	LF	500		$0.00
0102 912 2	PAVEMENT MARKING REMOVABLE TAPE, YELLOW, SOLID	LF	500		$0.00
0102 912 3	PAVEMENT MARKING REMOVABLE TAPE, YELLOW, OTHER	SF	25		$0.00
0104 1	ARTIFICIAL COVERINGS /ROLLED EROSION CONTROL PRODUCTS	SY	150		$0.00
0104 10 3	SEDIMENT BARRIER	LF	5000		$0.00
0104 11	FLOATING TURBIDITY BARRIER	LF	100		$0.00
0104 12	STAKED TURBIDITY BARRIER- NYLON REINFORCED PVC	LF	100		$0.00
0104 13 1	STAKED SILT FENCE, TYPE III	LF	500		$0.00
0104 13 2	STAKED SILT FENCE, TYPE IV	LF	500		$0.00
0104 18	INLET PROTECTION SYSTEM	EA	100		$0.00

0107 1	LITTER REMOVAL	AC	10		$0.00
0107 2	MOWING	AC	10		$0.00
0110 2 1	CLEARING & GRUBBING	AC	10		$0.00
0110 3	REMOVAL OF EXISTING STRUCTURES/BRIDGES	SF	20		$0.00
0110 4 10	REMOVAL OF EXISTING CONCRETE	SY	2000		$0.00
0110 7 1	MAILBOX, F&I SINGLE	EA	5		$0.00
0120 1	REGULAR EXCAVATION	CY	3000		$0.00
0120 3	LATERAL DITCH EXCAVATION	CY	100		$0.00
0120 4	SUBSOIL EXCAVATION	CY	100		$0.00
0120 5	CHANNEL EXCAVATION	CY	100		$0.00
0120 6	EMBANKMENT	CY	500		$0.00
0121 70	FLOWABLE FILL	CY	50		$0.00
0125 1	EXCAVATION FOR STRUCTURES	CY	25		$0.00
0145 1	GEOSYNTHETIC REINFORCED SOIL SLOPE	SF	25		$0.00
0160 4	TYPE B STABILIZATION	SY	7000		$0.00
0162 1 11	PREPARED SOIL LAYER-6" DEPTH	SY	50		$0.00
0162 1 12	PREPARED SOIL LAYER, FINISH SOIL LAYER, 12"	SY	50		$0.00
0162 1 21	PREPARED SOIL LAYER, ORGANIC SOIL LAYER, 6"	SY	50		$0.00
285701	OPTIONAL BASE, BASE GROUP 01	SY	100		$0.00
285702	OPTIONAL BASE, BASE GROUP 02	SY	100		$0.00
285703	OPTIONAL BASE, BASE GROUP 03	SY	100		$0.00
285704	OPTIONAL BASE, BASE GROUP 04	SY	1000		$0.00
285705	OPTIONAL BASE, BASE GROUP 05	SY	100		$0.00
285706	OPTIONAL BASE, BASE GROUP 06	SY	1000		$0.00
285707	OPTIONAL BASE, BASE GROUP 07	SY	100		$0.00
285708	OPTIONAL BASE, BASE GROUP 08	SY	1000		$0.00
285709	OPTIONAL BASE, BASE GROUP 09	SY	100		$0.00
285710	OPTIONAL BASE GROUP 10	SY	100		$0.00
285711	OPTIONAL BASE, BASE GROUP 11	SY	100		$0.00

285712	OPTIONAL BASE, BASE GROUP 12	SY	100		$0.00
285713	OPTIONAL BASE, BASE GROUP 13	SY	100		$0.00
285714	OPTIONAL BASE, BASE GROUP 14	SY	100		$0.00
285715	OPTIONAL BASE, BASE GROUP 15	SY	100		$0.00
0327 70 1	MILLING EXIST ASPH PAVT, 1" AVG DEPTH	SY	1000		$0.00
0327 70 2	MILLING EXIST ASPH PAVT, 3 1/2" AVG DEPTH	SY	200		$0.00
0327 70 3	MILLING EXIST ASPH PAVT, 4 1/2" AVG DEPTH	SY	200		$0.00
0327 70 4	MILLING EXIST ASPH PAVT, 3" AVG DEPTH	SY	200		$0.00
0327 70 5	MILLING EXIST ASPH PAVT, 2" AVG DEPTH	SY	200		$0.00
0327 70 6	MILLING EXIST ASPH PAVT, 1 1/2" AVG DEPTH	SY	5000		$0.00
0327 70 7	MILLING EXIST ASPH PAVT, 4" AVG DEPTH	SY	200		$0.00
0327 70 8	MILLING EXIST ASPH PAVT, 2 1/2" AVG DEPTH	SY	200		$0.00
0327 70 11	MILLING EXIST ASPH PAVT, 2 1/4" AVG DEPTH	SY	200		$0.00
0327 70 12	MILLING EXIST ASPH PAVT, 1 1/4" AVG DEPTH	SY	200		$0.00
0327 70 13	MILLING EXIST ASPH PAVT, 1 3/4" AVG DEPTH	SY	200		$0.00
0327 70 15	MILLING EXIST ASPH PAVT, 2 3/4" AVG DEPTH	SY	200		$0.00
0327 70 16	MILLING EXIST ASPH PAVT, 1/2" AVG DEPTH	SY	200		$0.00
0327 70 17	MILLING EXIST ASPH PAVT, 3 1/4" AVG DEPTH	SY	200		$0.00
0327 70 19	MILLING EXIST ASPH PAVT, 3/4" AVG DEPTH	SY	200		$0.00
0327 70 20	MILLING EXIST ASPH PAVT, 3 3/4" AVG DEPTH	SY	200		$0.00
0334 1 12 (1-99)	SUPERPAVE ASPHALTIC CONC, TRAFFIC B, 1-99 TONS	TN	50		$0.00
0334 1 12 (100-199)	SUPERPAVE ASPHALTIC CONC, TRAFFIC B, 100 - 199 TONS	TN	150		$0.00
0334 1 12 (200-300)	SUPERPAVE ASPHALTIC CONC, TRAFFIC B, 200 - 300 TONS	TN	250		$0.00
0334 1 12 (300+)	SUPERPAVE ASPHALTIC CONC, TRAFFIC B, 300 TONS OR MORE	TN	350		$0.00
0334 1 13 (1-99)	SUPERPAVE ASPHALTIC CONC, TRAFFIC C 1 - 99 TONS	TN	50		$0.00
0334 1 13 (100-199)	SUPERPAVE ASPHALTIC CONC, TRAFFIC C 100 - 199 TONS	TN	150		$0.00
0334 1 13 (200-300)	SUPERPAVE ASPHALTIC CONC, TRAFFIC C 200 -300 TONS	TN	250		$0.00
0334 1 13 (300+)	SUPERPAVE ASPHALTIC CONC, TRAFFIC C 300 TONS OR MORE	TN	350		$0.00
0334 1 52 (0-99)	SUPERPAVE ASPHALTIC CONCRETE, TRAFFIC B, PG76-22 0-99 TONS	TN	50		$0.00

0334 1 52 (100-199)	SUPERPAVE ASPHALTIC CONCRETE, TRAFFIC B, PG76-22 100-199 TONS	TN	150		$0.00
0334 1 52 (200-300)	SUPERPAVE ASPHALTIC CONCRETE, TRAFFIC B, PG76-22 200-300 TONS	TN	250		$0.00
0334 1 52 (300+)	SUPERPAVE ASPHALTIC CONCRETE, TRAFFIC B, PG76-22 300 TONS OR MORE	TN	350		$0.00
0334 1 53 (0-99)	SUPERPAVE ASPHALTIC CONCRETE, TRAFFIC C, PG76-22 0-99 TONS	TN	50		$0.00
0334 1 53 (100-199)	SUPERPAVE ASPHALTIC CONCRETE, TRAFFIC C, PG76-22 100-199 TONS	TN	150		$0.00
0334 1 53 (200-300)	SUPERPAVE ASPHALTIC CONCRETE, TRAFFIC C, PG76-22 200-300 TONS	TN	250		$0.00
0334 1 53 (300+)	SUPERPAVE ASPHALTIC CONCRETE, TRAFFIC C, PG76-22 300 TONS OR MORE	TN	350		$0.00
0334 1 54 (0-99)	SUPERPAVE ASPHALTIC CONCRETE, TRAFFIC D, PG76-22 0-99 TONS	TN	50		$0.00
0334 1 54 (100-199)	SUPERPAVE ASPHALTIC CONCRETE, TRAFFIC D, PG76-22 100-199 TONS	TN	150		$0.00
0334 1 54 (200-300)	SUPERPAVE ASPHALTIC CONCRETE, TRAFFIC D, PG76-22 200-300 TONS	TN	250		$0.00
0334 1 54 (300+)	SUPERPAVE ASPHALTIC CONCRETE, TRAFFIC D, PG76-22 300 TONS OR MORE	TN	350		$0.00
0334 1 56 (1-99)	SUPERPAVE ASPHALTIC CONCRETE, TRAFFIC B, HIGH POLYMER 0-99 TONS	TN	50		$0.00
0334 1 56 (100-199)	SUPERPAVE ASPHALTIC CONCRETE, TRAFFIC B, HIGH POLYMER 100-199 TONS	TN	150		$0.00
0334 1 56 (200-300)	SUPERPAVE ASPHALTIC CONCRETE, TRAFFIC B, HIGH POLYMER 200-300 TONS	TN	250		$0.00
0334 1 56 (300+)	SUPERPAVE ASPHALTIC CONCRETE, TRAFFIC B, HIGH POLYMER 300 TONS OR MORE	TN	350		$0.00
0334 1 57 (0-99)	SUPERPAVE ASPHALTIC CONCRETE, TRAFFIC C, HIGH POLYMER 0-99 TONS	TN	50		$0.00
0334 1 57 (100-199)	SUPERPAVE ASPHALTIC CONCRETE, TRAFFIC C, HIGH POLYMER 100-199 TONS	TN	150		$0.00
0334 1 57 (200-300)	SUPERPAVE ASPHALTIC CONCRETE, TRAFFIC C, HIGH POLYMER 200-300 TONS	TN	250		$0.00
0334 1 57 (300+)	SUPERPAVE ASPHALTIC CONCRETE, TRAFFIC C, HIGH POLYMER 300 TONS OR MORE	TN	350		$0.00
0334 1 58 (0-99)	SUPERPAVE ASPHALTIC CONCRETE, TRAFFIC D, HIGH POLYMER 0-99 TONS	TN	50		$0.00
0334 1 58 (100-199)	SUPERPAVE ASPHALTIC CONCRETE, TRAFFIC D, HIGH POLYMER 100-199 TONS	TN	150		$0.00
0334 1 58 (200-300)	SUPERPAVE ASPHALTIC CONCRETE, TRAFFIC D, HIGH POLYMER 200-300 TONS	TN	250		$0.00
0334 1 58 (300+)	SUPERPAVE ASPHALTIC CONCRETE, TRAFFIC D, HIGH POLYMER 300 TONS OR MORE	TN	350		$0.00
0337 7 80 (0-99)	ASPHALT CONCRETE FRICTION COURSE,TRAFFIC B, FC-9.5, PG 76-22 0-99 TONS	TN	50		$0.00
0337 7 80 (100-199)	ASPHALT CONCRETE FRICTION COURSE,TRAFFIC B, FC-9.5, PG 76-22 100-199 TONS	TN	150		$0.00
0337 7 80 (200-300)	ASPHALT CONCRETE FRICTION COURSE,TRAFFIC B, FC-9.5, PG 76-22 200-300 TONS	TN	250		$0.00
0337 7 80 (300+)	ASPHALT CONCRETE FRICTION COURSE,TRAFFIC B, FC-9.5, PG 76-22 300 TONS OR MORE	TN	350		$0.00
0337 7 81 (0-99)	ASPHALT CONCRETE FRICTION COURSE,TRAFFIC B, FC-12.5, PG 76-22 0-99 TONS	TN	50		$0.00
0337 7 81 (100-199)	ASPHALT CONCRETE FRICTION COURSE,TRAFFIC B, FC-12.5, PG 76-22 100-199 TONS	TN	150		$0.00

0337 7 81 (200-300)	ASPHALT CONCRETE FRICTION COURSE,TRAFFIC B, FC-12.5, PG 76-22 200-300 TONS	TN	250		$0.00
0337 7 81 (300+)	ASPHALT CONCRETE FRICTION COURSE,TRAFFIC B, FC-12.5, PG 76-22 300 TONS OR MORE	TN	350		$0.00
0337 7 82 (0-99)	ASPHALT CONCRETE FRICTION COURSE,TRAFFIC C, FC-9.5, PG 76-22 0-99 TONS	TN	50		$0.00
0337 7 82 (100-199)	ASPHALT CONCRETE FRICTION COURSE,TRAFFIC C, FC-9.5, PG 76-22 100-199 TONS	TN	150		$0.00
0337 7 82 (200-300)	ASPHALT CONCRETE FRICTION COURSE,TRAFFIC C, FC-9.5, PG 76-22 200-300 TONS	TN	250		$0.00
0337 7 82 (300+)	ASPHALT CONCRETE FRICTION COURSE,TRAFFIC C, FC-9.5, PG 76-22 300 TONS OR MORE	TN	350		$0.00
0337 7 83 (0-99)	ASPHALT CONCRETE FRICTION COURSE,TRAFFIC C, FC-12.5, PG 76-22 0-99 TONS	TN	50		$0.00
0337 7 83 (100-199)	ASPHALT CONCRETE FRICTION COURSE,TRAFFIC C, FC-12.5, PG 76-22 100-199 TONS	TN	150		$0.00
0337 7 83 (200-300)	ASPHALT CONCRETE FRICTION COURSE,TRAFFIC C, FC-12.5, PG 76-22 200-300 TONS	TN	250		$0.00
0337 7 83 (300+)	ASPHALT CONCRETE FRICTION COURSE,TRAFFIC C, FC-12.5, PG 76-22 300 TONS OR MORE	TN	350		$0.00
0337 7 85 (0-99)	ASPHALT CONCRETE FRICTION COURSE,TRAFFIC D, FC-12.5, PG 76-22 0-99 TONS	TN	50		$0.00
0337 7 85 (100-199)	ASPHALT CONCRETE FRICTION COURSE,TRAFFIC D, FC-12.5, PG 76-22 100-199 TONS	TN	150		$0.00
0337 7 85 (200-300)	ASPHALT CONCRETE FRICTION COURSE,TRAFFIC D, FC-12.5, PG 76-22 200-300 TONS	TN	250		$0.00
0337 7 85 (300+)	ASPHALT CONCRETE FRICTION COURSE,TRAFFIC D, FC-12.5, PG 76-22 300 TONS OR MORE	TN	350		$0.00
0337 7 90 (0-99)	ASPHALT CONCRETE FRICTION COURSE,TRAFFIC B, FC-9.5, HIGH POLYMER 0-99 TONS	TN	50		$0.00
0337 7 90 (100-199)	ASPHALT CONCRETE FRICTION COURSE,TRAFFIC B, FC-9.5, HIGH POLYMER 100-199 TONS	TN	150		$0.00
0337 7 90 (200-300)	ASPHALT CONCRETE FRICTION COURSE,TRAFFIC B, FC-9.5, HIGH POLYMER 200-300 TONS	TN	250		$0.00
0337 7 90 (300+)	ASPHALT CONCRETE FRICTION COURSE,TRAFFIC B, FC-9.5, HIGH POLYMER 300 TONS OR MORE	TN	350		$0.00
0337 7 93 (0-99)	ASPHALT CONCRETE FRICTION COURSE,TRAFFIC C, FC-12.5, HIGH POLYMER 0-99 TONS	TN	50		$0.00
0337 7 93 (100-199)	ASPHALT CONCRETE FRICTION COURSE,TRAFFIC C, FC-12.5, HIGH POLYMER 100-199 TONS	TN	150		$0.00
0337 7 93 (200-300)	ASPHALT CONCRETE FRICTION COURSE,TRAFFIC C, FC-12.5, HIGH POLYMER 200-300 TONS	TN	250		$0.00
0337 7 93 (300+)	ASPHALT CONCRETE FRICTION COURSE,TRAFFIC C, FC-12.5, HIGH POLYMER 300 TONS OR MORE	TN	350		$0.00
0337 7 94 (0-99)	ASPHALT CONCRETE FRICTION COURSE,TRAFFIC D, FC-12.5, HIGH POLYMER 0-99 TONS	TN	50		$0.00
0337 7 94 (100-199)	ASPHALT CONCRETE FRICTION COURSE,TRAFFIC D, FC-12.5, HIGH POLYMER 100-199 TONS	TN	150		$0.00
0337 7 94 (200-300)	ASPHALT CONCRETE FRICTION COURSE,TRAFFIC D, FC-12.5, HIGH POLYMER 200-300 TONS	TN	250		$0.00
0337 7 94 (300+)	ASPHALT CONCRETE FRICTION COURSE,TRAFFIC D, FC-12.5, HIGH POLYMER 300 TONS OR MORE	TN	350		$0.00
0339 1	MISCELLANEOUS ASPHALT PAVEMENT	TN	25		$0.00
0350 3 5	PLAIN CEMENT CONCRETE PAVEMENT, 8"	SY	100		$0.00
0350 3 9	PLAIN CEMENT CONCRETE PAVEMENT, 10"	SY	100		$0.00

0350 3 13	PLAIN CEMENT CONCRETE PAVEMENT, 12"	SY	100		$0.00
0350 5	CLEANING & SEALING JOINTS- CONCRETE PAVEMENT:	LF	100		$0.00
0350 30 13	CONCRETE PAVEMENT FOR ROUNDABOUT APRON, 12" DEPTH	SY	100		$0.00
0352 70	GRINDING CONCRETE PAVEMENT	SY	100		$0.00
0400 0 11	CONCRETE CLASS NS, GRAVITY WALL	CY	10		$0.00
0400 1 2	CONCRETE CLASS I, ENDWALLS	CY	10		$0.00
0400 1 11	CONCRETE CLASS I, RETAINING WALLS	CY	10		$0.00
0400 2 1	CONCRETE CLASS II, CULVERTS	CY	10		$0.00
0400 2 2	CONCRETE CLASS II, ENDWALLS	CY	10		$0.00
0400 2 5	CONCRETE CLASS II, BRIDGE SUBSTRUCTURE	CY	10		$0.00
0400 2 11	CONCRETE CLASS II, RETAINING WALLS	CY	10		$0.00
0400 3 1	CONCRETE CLASS III, CULVERTS	CY	10		$0.00
0400 3 8	CONCRETE CLASS III, BULKHEAD	CY	10		$0.00
0400 4 1	CONCRETE CLASS IV, CULVERTS	CY	10		$0.00
0400 4 2	CONCRETE CLASS IV, ENDWALLS	CY	10		$0.00
0400 4 5	CONCRETE CLASS IV, BRIDGE SUBSTRUCTURE	CY	10		$0.00
0400 4 11	CONC CLASS IV, RETAINING WALLS	CY	10		$0.00
0400 145	CLEANING CONCRETE SURFACE	SF	20		$0.00
0401 70 1	RESTORE SPALLED AREAS, EPOXY	CF	10		$0.00
0401 70 4	RESTORE SPALLED AREAS, PORTLAND CEMENT GROUT	CF	10		$0.00
0401 70 5	RESTORE SPALLED AREAS, CONTRACTORS OPTION	CF	10		$0.00
0411 1	EPOXY MATERIAL FOR CRACK INJECTION- STRUCTURES REHAB	GA	10		$0.00
0411 2	CRACKS INJECT & SEAL- STRUCTURES REHAB	LF	25		$0.00
413-149	PENETRANT SEALER	GA	10		$0.00
413-154	CLEANING & SEALING CONCRETE SURFACES- PENETRANT SEALER OR METHACRYLATES	SF	25		$0.00
0415 1 1	REINFORCING STEEL- ROADWAY	LB	100		$0.00
0415 1 3	REINFORCING STEEL- RETAINING WALL	LB	100		$0.00
0415 1 5	REINFORCING STEEL- BRIDGE SUBSTRUCTURE	LB	100		$0.00
0415 1 6	REINFORCING STEEL- MISCELLANEOUS	LB	100		$0.00

0415 1 8	REINFORCING STEEL- BULKHEAD	LB	100		$0.00
0425 1201	INLETS, CURB, TYPE 9, <10'	EA	3		$0.00
0425 1202	INLETS, CURB, TYPE 9, >10'	EA	3		$0.00
0425 1203	INLETS, CURB, TYPE 9, J BOT, <10'	EA	3		$0.00
0425 1204	INLETS, CURB, TYPE 9, J BOT, >10'	EA	3		$0.00
0425 1205	INLETS, CURB, TYPE 9, PARTIAL	EA	3		$0.00
0425 1209	INLETS, CURB, TYPE 9, MODIFY	EA	3		$0.00
0425 1211	INLETS, CURB, TYPE 10, <10'	EA	3		$0.00
0425 1212	INLETS, CURB, TYPE 10, >10'	EA	3		$0.00
0425 1213	INLETS, CURB, TYPE 10, J BOT <10'	EA	3		$0.00
0425 1214	INLETS, CURB, TYPE 10, J BOT >10'	EA	3		$0.00
0425 1215	INLETS, CURB, TYPE 10, PARTIAL	EA	3		$0.00
0425 1311	INLETS, CURB, TYPE P-1, <10'	EA	3		$0.00
0425 1312	INLETS, CURB TYPE P-1, >10'	EA	3		$0.00
0425 1315	INLETS, CURB TYPE P-1, PARTIAL	EA	3		$0.00
0425 1319	INLETS, CURB TYPE P-1, MODIFY	EA	3		$0.00
0425 1321	INLETS, CURB, TYPE P-2, <10'	EA	3		$0.00
0425 1322	INLETS, CURB, TYPE P-2, >10'	EA	3		$0.00
0425 1325	INLETS, CURB, TYPE P-2, PARTIAL	EA	3		$0.00
0425 1329	INLETS, CURB TYPE P-2, MODIFY	EA	3		$0.00
0425 1331	INLETS, CURB, TYPE P-3, <10'	EA	3		$0.00
0425 1332	INLETS, CURB. TYPE P-3, >10'	EA	3		$0.00
0425 1335	INLETS, CURB, TYPE P-3, PARTIAL	EA	3		$0.00
0425 1341	INLETS, CURB, TYPE P-4, <10'	EA	3		$0.00
0425 1342	INLETS, CURB, TYPE P-4, >10'	EA	3		$0.00
0425 1345	INLETS, CURB, TYPE P-4, PARTIAL	EA	3		$0.00
0425 1349	INLETS, CURB, TYPE P-4, MODIFY	EA	3		$0.00
0425 1351	INLETS, CURB, TYPE P-5, <10'	EA	3		$0.00
0425 1352	INLETS, CURB, TYPE P-5, >10'	EA	3		$0.00

0425 1355	INLETS, CURB, TYPE P-5, PARTIAL	EA	3		$0.00
0425 1359	INLETS, CURB, TYPE P-5, MODIFY	EA	3		$0.00
0425 1361	INLETS, CURB, TYPE P-6, <10'	EA	3		$0.00
0425 1362	INLETS, CURB, TYPE P-6, >10'	EA	3		$0.00
0425 1365	INLETS, CURB, TYPE P-6, PARTIAL	EA	3		$0.00
0425 1369	INLETS, CURB, TYPE P-6, MODIFY	EA	3		$0.00
0425 1411	INLETS, CURB TYPE J-1, <10'	EA	3		$0.00
0425 1412	INLETS, CURB, TYPE J-1, >10'	EA	3		$0.00
0425 1415	INLETS, CURB, TYPE J-1, PARTIAL	EA	3		$0.00
0425 1419	INLETS, CURB, TYPE J-1, MODIFY	EA	3		$0.00
0425 1421	INLETS, CURB, TYPE J-2, <10'	EA	3		$0.00
0425 1422	INLETS, CURB, TYPE J-2, >10'	EA	3		$0.00
0425 1425	INLETS, CURB, TYPE J-2, PARTIAL	EA	3		$0.00
0425 1429	INLETS, CURB, TYPE J-2, MODIFY	EA	3		$0.00
0425 1431	INLETS, CURB, TYPE J-3, <10'	EA	3		$0.00
0425 1432	INLETS, CURB, TYPE J-3, >10'	EA	3		$0.00
0425 1435	INLETS, CURB, TYPE J-3, PARTIAL	EA	3		$0.00
0425 1441	INLETS, CURB, TYPE J-4, <10'	EA	3		$0.00
0425 1442	INLETS, CURB, TYPE J-4, >10'	EA	3		$0.00
0425 1445	INLETS, CURB, TYPE J-4, PARTIAL	EA	3		$0.00
0425 1451	INLETS, CURB, TYPE J-5, <10'	EA	3		$0.00
0425 1452	INLETS, CURB, TYPE J-5, >10'	EA	3		$0.00
0425 1455	INLETS, CURB, TYPE J-5, PARTIAL	EA	3		$0.00
0425 1459	INLETS, CURB, TYPE J-5, MODIFY	EA	3		$0.00
0425 1461	INLETS, CURB, TYPE J-6, <10'	EA	3		$0.00
0425 1462	INLETS, CURB, TYPE J-6, >10'	EA	3		$0.00
0425 1465	INLETS, CURB, TYPE J-6, PARTIAL	EA	3		$0.00
0425 1469	INLETS, CURB, TYPE J-6, MODIFY	EA	3		$0.00
0425 1471	INLETS, CURB, TYPE 7, <10'	EA	3		$0.00

0425 1472	INLETS, CURB, TYPE 7, >10'	EA	3		$0.00
0425 1473	INLETS, CURB, TYPE 7, J BOT , <10'	EA	3		$0.00
0425 1474	INLETS, CURB, TYPE 7, J BOT ,>10'	EA	3		$0.00
0425 1475	INLETS, CURB, TYPE 7, PARTIAL	EA	3		$0.00
0425 1479	INLETS, CURB, TYPE 7, MODIFY	EA	3		$0.00
0425 1481	INLETS, CURB, TYPE 8, <10'	EA	3		$0.00
0425 1483	INLETS, CURB, TYPE 8, J BOT , <10'	EA	3		$0.00
0425 1484	INLETS, CURB, TYPE 8, J BOT ,>10'	EA	3		$0.00
0425 1485	INLETS, CURB, TYPE 8, PARTIAL	EA	3		$0.00
0425 1489	INLETS, CURB, TYPE 8, MODIFY	EA	3		$0.00
0425 1501	INLETS, DT BOT, TYPE A, <10'	EA	3		$0.00
0425 1502	INLETS, DT BOT, TYPE A, >10'	EA	3		$0.00
0425 1503	INLETS, DT BOT, TYPE A, J BOT, <10'	EA	3		$0.00
0425 1504	INLETS, DT BOT, TYPE A, J BOT, >10'	EA	3		$0.00
0425 1505	INLETS, DT BOT, TYPE A, PARTIAL	EA	3		$0.00
0425 1511	INLETS, DT BOT, TYPE B, <10'	EA	3		$0.00
0425 1512	INLETS, DT BOT, TYPE B, >10'	EA	3		$0.00
0425 1513	INLETS, DT BOT, TYPE B, J BOT, <10'	EA	3		$0.00
0425 1514	INLETS, DT BOT, TYPE B, J BOT, >10'	EA	3		$0.00
0425 1515	INLETS, DT BOT, TYPE B, PARTIAL	EA	3		$0.00
0425 1519	INLETS, DT BOT, TYPE B, MODIFY	EA	3		$0.00
0425 1521	INLETS, DT BOT, TYPE C,<10'	EA	3		$0.00
0425 1522	INLETS, DT BOT, TYPE C,>10'	EA	3		$0.00
0425 1523	INLETS, DT BOT, TYPE C,JBOT, <10'	EA	3		$0.00
0425 1524	INLETS, DT BOT, TYPE C, JBOT, >10'	EA	3		$0.00
0425 1525	INLETS, DITCH BOTTOM, TYPE C, PARTIAL	EA	3		$0.00
0425 1529	INLETS, DT BOT, TYPE C, MODIFY	EA	3		$0.00
0425 1531	INLETS, DITCH BOTTOM, TYPE C MODIFIED- BACK OF SIDEWALK, <10'	EA	3		$0.00
0425 1532	INLETS, DITCH BOTTOM, TYPE C MODIFIED- BACK OF SIDEWALK, >10'	EA	3		$0.00

0425 1533	INLETS, DITCH BOTTOM TYPE C MODIFIED- BACK OF SIDEWALK, J BOT, <10'	EA	3		$0.00
0425 1534	INLETS, DITCH BOTTOM, TYPE C MODIFIED- BACK OF SIDEWALK, J BOT, >10'	EA	3		$0.00
0425 1535	INLETS, DITCH BOTTOM TYPE C MODIFIED- BACK OF SIDEWALK, PARTIAL	EA	3		$0.00
0425 1541	INLETS, DT BOT, TYPE D, <10'	EA	3		$0.00
0425 1542	INLETS, DT BOT, TYPE D, >10'	EA	3		$0.00
0425 1543	INLETS, DITCH BOTTOM, TYPE D, J BOT, <10'	EA	3		$0.00
0425 1544	INLETS, DITCH BOTTOM, TYPE D, J BOT, >10'	EA	3		$0.00
0425 1545	INLETS, DITCH BOTTOM, TYPE D, PARTIAL	EA	3		$0.00
0425 1549	INLETS, DT BOT, TYPE D, MODIFY	EA	3		$0.00
0425 1551	INLETS, DT BOT, TYPE E, <10'	EA	3		$0.00
0425 1552	INLETS, DT BOT, TYPE E, >10'	EA	3		$0.00
0425 1553	INLETS, DT BOT, TYPE E, J BOT, <10'	EA	3		$0.00
0425 1554	INLETS, DT BOT, TYPE E, J BOT, >10'	EA	3		$0.00
0425 1555	INLETS, DT BOT, TYPE E, PARTIAL	EA	3		$0.00
0425 1559	INLETS, DT BOT, TYPE E, MODIFY	EA	3		$0.00
0425 1561	INLETS, DT BOT, TYPE F, <10'	EA	3		$0.00
0425 1562	INLETS, DT BOT, TYPE F, >10'	EA	3		$0.00
0425 1563	INLETS, DITCH BOTTOM, TYPE F, J BOT, <10'	EA	3		$0.00
0425 1564	INLETS, DITCH BOTTOM, TYPE F, J BOT, >10'	EA	3		$0.00
0425 1565	INLETS, DITCH BOTTOM, TYPE F, PARTIAL	EA	3		$0.00
0425 1569	INLETS, DITCH BOTTOM, TYPE F, MODIFY	EA	3		$0.00
0425 1571	INLETS, DITCH BOTTOM, TYPE G, <10'	EA	3		$0.00
0425 1572	INLETS, DITCH BOTTOM, TYPE G, >10'	EA	3		$0.00
0425 1573	INLETS, DITCH BOTTOM, TYPE G, J BOT, <10'	EA	3		$0.00
0425 1574	INLETS, DITCH BOTTOM, TYPE G, J BOT, >10'	EA	3		$0.00
0425 1575	INLETS, DITCH BOTTOM, TYPE G, PARTIAL	EA	3		$0.00
0425 1579	INLETS, DITCH BOTTOM, TYPE G, MODIFY	EA	3		$0.00
0425 1581	INLETS, DT BOT, TYPE H, <10'	EA	3		$0.00
0425 1582	INLETS, DT BOT, TYPE H, >10'	EA	3		$0.00

0425 1583	INLETS, DT BOT, TYPE H, J BOTTOM <10'	EA	3		$0.00
0425 1584	INLETS, DT BOT, TYPE H, J BOTTOM >10'	EA	3		$0.00
0425 1585	INLETS, DT BOT, TYPE H, PARTIAL	EA	3		$0.00
0425 1589	INLETS, DT BOT, TYPE H, MODIFY	EA	3		$0.00
0425 1601	INLETS, DT BOT, TYPE J, <10'	EA	3		$0.00
0425 1602	INLETS, DT BOT, TYPE J, >10'	EA	3		$0.00
0425 1603	INLETS, DT BOT, TYPE J, J BOT, <10'	EA	3		$0.00
0425 1604	INLETS, DT BOT, TYPE J, JBOT,>10'	EA	3		$0.00
0425 1605	INLETS, DT BOT, TYPE J, PARTIAL	EA	3		$0.00
0425 1609	INLETS, DT BOT, TYPE J, MODIFY	EA	3		$0.00
0425 1611	INLETS, DITCH BOTTOM, TYPE K, <10'	EA	3		$0.00
0425 1619	INLETS, DITCH BOTTOM, TYPE K, J BOTTOM, MODIFY	EA	3		$0.00
0425 1701	INLETS, GUTTER, TYPE S, <10'	EA	3		$0.00
0425 1702	INLETS, GUTTER, TYPE S, >10'	EA	3		$0.00
0425 1703	INLETS, GUTTER, TYPE S, J BOTTOM <10'	EA	3		$0.00
0425 1704	INLETS, GUTTER, TYPE S, J BOTTOM, >10'	EA	3		$0.00
0425 1705	INLETS, GUTTER, TYPE S, PARTIAL	EA	3		$0.00
0425 1711	INLETS, GUTTER, TYPE V, <10'	EA	3		$0.00
0425 1712	INLETS, GUTTER, TYPE V, >10'	EA	3		$0.00
0425 1713	INLETS, GUTTER, TYPE V, J BOT, <10'	EA	3		$0.00
0425 1714	INLETS, GUTTER, TYPE V, J BOTTOM, >10'	EA	3		$0.00
0425 1715	INLETS, GUTTER, TYPE V, PARTIAL	EA	3		$0.00
0425 1719	INLETS, GUTTER, TYPE V, MODIFY	EA	3		$0.00
0425 1910	INLETS, CLOSED FLUME	EA	3		$0.00
0425 2 41	MANHOLES, P-7, <10'	EA	3		$0.00
0425 2 42	MANHOLES, P-7, >10'	EA	3		$0.00
0425 2 43	MANHOLES, P-7, PARTIAL	EA	3		$0.00
0425 2 61	MANHOLES, P-8, <10'	EA	3		$0.00
0425 2 62	MANHOLES, P-8, >10'	EA	3		$0.00

0425 2 63	MANHOLES, P-8, PARTIAL	EA	3		$0.00
0425 2 71	MANHOLES, J-7, <10'	EA	3		$0.00
0425 2 72	MANHOLES, J-7, >10'	EA	3		$0.00
0425 2 73	MANHOLES, J-7, PARTIAL	EA	3		$0.00
0425 2 91	MANHOLES, J-8, <10'	EA	3		$0.00
0425 2 92	MANHOLES, J-8, >10'	EA	3		$0.00
0425 2 93	MANHOLES, J-8, PARTIAL	EA	3		$0.00
0425 2110	MANHOLES, REPAIR	EA	3		$0.00
0425 3 41	JUNCTION BOX, DRAINAGE, P-7, <10'	EA	3		$0.00
0425 3 42	JUNCTION BOXES, P-7, >10'	EA	3		$0.00
0425 3 43	JUNCTION BOX, DRAINAGE, P-7, PARTIAL	EA	3		$0.00
0425 3 50	JUNCTION BOX, DRAINAGE, REPAIR	EA	3		$0.00
0425 3 61	JUNCTION BOXES, J-7, <10'	EA	3		$0.00
0425 3 62	JUNCTION BOXES, J-7, >10'	EA	3		$0.00
0425 3 63	JUNCTION BOXES, DRAINAGE, J-7, PARTIAL	EA	3		$0.00
0425 4	INLETS, ADJUST	EA	3		$0.00
0425 5	MANHOLE, ADJUST	EA	3		$0.00
0425 6	VALVE BOXES, ADJUST	EA	3		$0.00
0425 7	MANHOLE COVER- REPLACE	EA	3		$0.00
0425 8	DRAINAGE STRUCTURES, MISCELLANEOUS, ADJUST	EA	3		$0.00
0425 11	MODIFY EXISTING DRAINAGE STRUCTURE	EA	3		$0.00
0425 14 1	GRATE FOR EXISTING DRAINAGE STRUCTURE, FURNISH AND INSTALL	SF	3		$0.00
0425 15 41	INLET TOP, REPAIR, CURB INLET	EA	3		$0.00
0425 15 42	INLET TOP, REPAIR, DITCH BOTTOM INLET	EA	3		$0.00
0425 15 51	INLET TOP, REPLACE, CURB INLET	EA	3		$0.00
0425 15 52	INLET TOP, REPLACE, DITCH BOTTOM INLET	EA	3		$0.00
0425 16 11	DRAINAGE MANHOLE- REPLACE TOP AND RIM	EA	3		$0.00
0425 82	REPLACE GRATE	EA	3		$0.00
0430 94 1	DESILTING PIPE, 0 - 24"	LF	50		$0.00

0430 94 2	DESILTING PIPE, 25 - 36"	LF	50		$0.00
430173112	PIPE CULVERT OPTIONAL MATERIAL, ROUND, 12", GUTTER DRAIN	LF	50		$0.00
430173115	PIPE CULVERT OPTIONAL MATERIAL, ROUND, 15", GUTTER DRAIN	LF	50		$0.00
430173118	PIPE CULVERT OPTIONAL MATERIAL, ROUND, 18", GUTTER DRAIN	LF	50		$0.00
430173124	PIPE CULVERT OPTIONAL MATERIAL, ROUND, 24", GUTTER DRAIN	LF	50		$0.00
430173130	PIPE CULVERT OPTIONAL MATERIAL, ROUND, 30", GUTTER DRAIN	LF	50		$0.00
430173136	PIPE CULVERT OPTIONAL MATERIAL, ROUND, 36", GUTTER DRAIN	LF	50		$0.00
430173142	PIPE CULVERT, OPTIONAL MATERIAL, ROUND, 42", GUTTER DRAIN	LF	50		$0.00
430173148	PIPE CULVERT, OPTIONAL MATERIAL, ROUND, 48" GUTTER DRAIN	LF	50		$0.00
430173218	PIPE CULVERT OPTIONAL MATERIAL, OTHER/ELLIPTICAL, 18", GUTTER DRAIN	LF	50		$0.00
430174112	PIPE CULVERT, OPTIONAL MATERIAL, ROUND, 12"SD	LF	50		$0.00
430174115	PIPE CULVERT, OPTIONAL MATERIAL, ROUND, 15"SD	LF	50		$0.00
430174118	PIPE CULVERT, OPTIONAL MATERIAL, ROUND, 18"SD	LF	50		$0.00
430174124	PIPE CULVERT, OPTIONAL MATERIAL, ROUND, 24"SD	LF	50		$0.00
430174130	PIPE CULVERT, OPTIONAL MATERIAL, ROUND, 30"SD	LF	50		$0.00
430174142	PIPE CULVERT, OPTIONAL MATERIAL, ROUND, 42"SD	LF	50		$0.00
430174148	PIPE CULVERT, OPTIONAL MATERIAL, ROUND, 48"SD	LF	50		$0.00
430174154	PIPE CULVERT, OPTIONAL MATERIAL, ROUND, 54"SD	LF	50		$0.00
430174160	PIPE CULVERT, OPTIONAL MATERIAL, ROUND, 60"SD	LF	50		$0.00
430174172	PIPE CULVERT, OPTIONAL MATERIAL, ROUND, 72"SD	LF	50		$0.00
430174215	PIPE CULVERT, OPTIONAL MATERIAL, OTHER SHAPE - ELLIP/ARCH, 15"SD	LF	50		$0.00
430174218	PIPE CULVERT, OPTIONAL MATERIAL, OTHER SHAPE - ELLIP/ARCH, 18"SD	LF	50		$0.00
430174224	PIPE CULVERT, OPTIONAL MATERIAL, OTHER SHAPE - ELLIP/ARCH, 24"SD	LF	50		$0.00
430174230	PIPE CULVERT, OPTIONAL MATERIAL, OTHER SHAPE - ELLIP/ARCH, 30"SD	LF	50		$0.00
430174236	PIPE CULVERT, OPTIONAL MATERIAL, OTHER SHAPE - ELLIP/ARCH, 36"SD	LF	50		$0.00
430174242	PIPE CULVERT, OPTIONAL MATERIAL, ELLIP/OTHER, 42"SD	LF	50		$0.00
430174248	PIPE CULVERT,OPTIONAL MATERIAL,OTHER-ELIP/ARCH, 48"SD	LF	50		$0.00
430175112	PIPE CULVERT,OPTIONAL MATERIAL,ROUND, 12"S/CD	LF	50		$0.00
430175115	PIPE CULVERT,OPTIONAL MATERIAL,ROUND, 15"S/CD	LF	50		$0.00

430175118	PIPE CULVERT, OPTIONAL MATERIAL, ROUND, 18"S/CD	LF	250		$0.00
430175124	PIPE CULVERT, OPTIONAL MATERIAL, ROUND, 24"S/CD	LF	50		$0.00
430175130	PIPE CULVERT, OPT MATERIAL, ROUND, 30"S/CD	LF	50		$0.00
430175136	PIPE CULVERT, OPT MATERIAL, ROUND, 36"S/CD	LF	50		$0.00
430175140	PIPE CULVERT, OPT MATERIAL, ROUND, 40"S/CD	LF	50		$0.00
430175142	PIPE CULVERT, OPT MATERIAL, ROUND, 42"S/CD	LF	50		$0.00
430175148	PIPE CULVERT, OPT MATERIAL, ROUND, 48"S/CD	LF	50		$0.00
430175154	PIPE CULVERT, OPT MATERIAL, ROUND, 54"S/CD	LF	50		$0.00
430175160	PIPE CULVERT, OPT MATERIAL, ROUND, 60"S/CD	LF	50		$0.00
430175166	PIPE CULVERT, OPT MATERIAL, ROUND, 66"S/CD	LF	50		$0.00
430175172	PIPE CULVERT, OPT MATERIAL, ROUND, 72"S/CD	LF	50		$0.00
430175178	PIPE CULVERT, OPT MATERIAL, ROUND, 78" STORM/CROSS DRAIN	LF	50		$0.00
430175184	PIPE CULVERT, OPT MATERIAL, ROUND, 84"S/CD	LF	50		$0.00
430175196	PIPE CULVERT, OPT MATERIAL, ROUND, 96"S/CD	LF	50		$0.00
430175215	PIPE CULVERT,OPTIONAL MATERIAL,OTHER-ELIP/ARCH, 15"S/CD	LF	50		$0.00
430175218	PIPE CULVERT,OPTIONAL MATERIAL,OTHER-ELIP/ARCH, 18"S/CD	LF	50		$0.00
430175224	PIPE CULVERT,OPTIONAL MATERIAL,OTHER SHAPE-ELIP/ARCH, 24"S/CD	LF	50		$0.00
430175230	PIPE CULVERT, OPT MATERIAL, OTHER SHAPE - ELIP/ARCH, 30"S/CD	LF	50		$0.00
430175236	PIPE CULVERT, OPT MATERIAL, OTHER SHAPE - ELIP/ARCH, 36"S/CD	LF	50		$0.00
430175242	PIPE CULVERT, OPT MATERIAL, OTHER SHAPE - ELIP/ARCH, 42"S/CD	LF	50		$0.00
430175248	PIPE CULVERT, OPT MATERIAL, OTHER SHAPE - ELIP/ARCH, 48"S/CD	LF	50		$0.00
430175254	PIPE CULVERT, OPT MATERIAL, OTHER SHAPE - ELIP/ARCH, 54"S/CD	LF	50		$0.00
430175260	PIPE CULVERT, OPT MATERIAL, OTHER SHAPE - ELIP/ARCH, 60"S/CD	LF	50		$0.00
430175266	PIPE CULVERT, OPT MATERIAL, OTHER SHAPE - ELIP/ARCH, 66"S/CD	LF	50		$0.00
430175272	PIPE CULVERT, OPT MATERIAL, OTHER SHAPE - ELIP/ARCH, 72"S/CD	LF	50		$0.00
430175299	PIPE CULVERT,OPTIONAL MATERIAL,OTHER SHAPE-ELIP/ARCH, 99" OR >, S/CD	LF	50		$0.00
430185118	PIPE CULVERT,OPTIONAL MATERIAL,ROUND, JACK & BORE, 18" , STORM AND CROSS DRAIN	LF	50		$0.00
430185124	PIPE CULVERT,OPTIONAL MATERIAL,ROUND, JACK & BORE, 24", STORM AND CROSS DRAIN	LF	50		$0.00
430185130	PIPE CULVERT,OPTIONAL MATERIAL,ROUND, JACK & BORE, 30", STORM AND CROSS DRAIN	LF	50		$0.00

430185136	PIPE CULVERT,OPTIONAL MATERIAL,ROUND, JACK & BORE, 36", STORM AND CROSS DRAIN	LF	50		$0.00
430185142	PIPE CULVERT,OPTIONAL MATERIAL,ROUND, JACK & BORE, 42", STORM AND CROSS DRAIN	LF	50		$0.00
430185148	PIPE CULVERT,OPTIONAL MATERIAL,ROUND, JACK & BORE, 48", STORM AND CROSS DRAIN	LF	50		$0.00
430185154	PIPE CULVERT,OPTIONAL MATERIAL,ROUND, JACK & BORE, 54", STORM AND CROSS DRAIN	LF	50		$0.00
430185160	PIPE CULVERT,OPTIONAL MATERIAL,ROUND, JACK & BORE, 60" , STORM AND CROSS DRAIN	LF	50		$0.00
430185166	PIPE CULVERT,OPTIONAL MATERIAL,ROUND, JACK & BORE, 66" , STORM AND CROSS DRAIN	LF	50		$0.00
430185178	PIPE CULVERT,OPTIONAL MATERIAL,ROUND, JACK & BORE, 78" , STORM AND CROSS DRAIN	LF	50		$0.00
0430200 21	FLARED END SECTION, CONCRETE, 12"	EA	3		$0.00
0430200 23	FLARED END SECTION, CONCRETE, 15"	EA	3		$0.00
0430200 25	FLARED END SECTION, CONCRETE, 18"	EA	3		$0.00
0430200 29	FLARED END SECTION, CONCRETE, 24"	EA	3		$0.00
0430200 33	FLARED END SECTION, CONCRETE, 30"	EA	3		$0.00
0430200 38	FLARED END SECTION, CONCRETE, 36"	EA	3		$0.00
0430200 40	FLARED END SECTION, CONCRETE, 42"	EA	3		$0.00
0430200 41	FLARED END SECTION, CONCRETE, 48"	EA	3		$0.00
0430200 42	FLARED END SECTION, CONCRETE, 54"	EA	3		$0.00
0430200 43	FLARED END SECTION, CONCRETE, 60"	EA	3		$0.00
0430200 44	FLARED END SECTION, CONCRETE, 66"	EA	3		$0.00
0430200 45	FLARED END SECTION, CONCRETE, 72"	EA	3		$0.00
430600025	U-ENDWALL, STD 260, 1:6 SLOPE, 18"PIPE	EA	3		$0.00
430600125	U-ENDWALL, STD 260, 1:4 SLOPE, 18"PIPE	EA	3		$0.00
430602123	U-ENDWALL, WITH GRATE,STD INDEX 260, 1:4 SLOPE, 15"	EA	3		$0.00
430602125	U-ENDWALL, WITH GRATE,STD 260, 1:4 SLOPE, 18"	EA	3		$0.00
430602129	U-ENDWALL, WITH GRATE,STD 260, 1:4 SLOPE, 24"	EA	3		$0.00
430602133	U-ENDWALL, WITH GRATE,STD INDEX 260, 1:4 SLOPE, 30"	EA	3		$0.00
430610025	U-ENDWALL, STD 261, 1:6 SLOPE, 18"PIPE	EA	3		$0.00
430610029	U-ENDWALL, STD 261, 1:6 SLOPE, 24"PIPE	EA	3		$0.00
430610033	U-ENDWALL, STD 261, 1:6 SLOPE, 30"PIPE	EA	3		$0.00
430610123	U-ENDWALL, STD 261, 1:4 SLOPE, 15"PIPE	EA	3		$0.00

430610125	U-ENDWALL, STD 261, 1:4 SLOPE, 18"PIPE	EA	3		$0.00
430610129	U-ENDWALL, STD 261, 1:4 SLOPE, 24"PIPE	EA	3		$0.00
430610133	U-ENDWALL, STD 261, 1:4 SLOPE, 30"PIPE	EA	3		$0.00
430610223	U-ENDWALL, STD 261, 1:3 SLOPE, 15"PIPE	EA	3		$0.00
430610225	U-ENDWALL, STD 261, 1:3 SLOPE, 18"PIPE	EA	3		$0.00
430610229	U-ENDWALL, STD 261, 1:3 SLOPE, 24"PIPE	EA	3		$0.00
430610233	U-ENDWALL, STD 261, 1:3 SLOPE, 30"PIPE	EA	3		$0.00
430610323	U-ENDWALL, STD 261, 1:2 SLOPE, 15"PIPE	EA	3		$0.00
430610325	U-ENDWALL, STD 261, 1:2 SLOPE, 18"PIPE	EA	3		$0.00
430610329	U-ENDWALL, STD 261,1:2 SLOPE, 24"PIPE	EA	3		$0.00
430611023	U-ENDWALL, STD 261, BAFFLES, 1:6 SLOPE, 15"PIPE	EA	3		$0.00
430611025	U-ENDWALL, STD 261, BAFFLES, 1:6 SLOPE, 18"PIPE	EA	3		$0.00
430611029	U-ENDWALL, STD 261, BAFFLES, 1:6 SLOPE, 24"PIPE	EA	3		$0.00
430611033	U-ENDWALL, STD 261, BAFFLES, 1:6 SLOPE, 30"PIPE	EA	3		$0.00
430611123	U-ENDWALL WITH BAFFLES, STD 261, 1:4 SLOPE, 15"PIPE	EA	3		$0.00
430611125	U-ENDWALL WITH BAFFLES, STD 261, 1:4 SLOPE, 18"PIPE	EA	3		$0.00
430611129	U-ENDWALL WITH BAFFLES, STD 261, 1:4 SLOPE, 24"PIPE	EA	3		$0.00
430611133	U-ENDWALL WITH BAFFLES,STD 261,1:4 SLOPE,30"PIPE	EA	3		$0.00
430611223	U-ENDWALL WITH BAFFLES, STD 261, 1:3 SLOPE, 15"PIPE	EA	3		$0.00
430611225	U-ENDWALL WITH BAFFLES, STD 261, 1:3 SLOPE, 18"PIPE	EA	3		$0.00
430611229	U-ENDWALL WITH BAFFLES, STD 261, 1:3 SLOPE, 24"PIPE	EA	3		$0.00
430611233	U-ENDWALL, STD 261, BAFFLES, 1:3 SLOPE, 30"PIPE	EA	3		$0.00
430611323	U-ENDWALL WITH BAFFLES, STD 261, 1:2 SLOPE, 15"PIPE	EA	3		$0.00
430611325	U-ENDWALL WITH BAFFLES, STD 261, 1:2 SLOPE, 18"PIPE	EA	3		$0.00
430611329	U-ENDWALL WITH BAFFLES, STD 261, 1:2 SLOPE, 24"PIPE	EA	3		$0.00
430611333	U-ENDWALL, BAFFLES, STD 261, 1:2 SLOPE, 30"PIPE	EA	3		$0.00
430612023	U-ENDWALL WITH GRATE, STD 261, 1:6 SLOPE, 15"	EA	3		$0.00
430612025	U-ENDWALL WITH GRATE, STD 261, 1:6 SLOPE, 18"PIPE	EA	3		$0.00
430612029	U-ENDWALL WITH GRATE, STD 261, 1:6 SLOPE, 24"PIPE	EA	3		$0.00

430612033	U-ENDWALL WITH GRATE, STD 261, 1:6 SLOPE, 30"	EA	3		$0.00
430612125	U-ENDWALL WITH GRATE, STD 261, 1:4 SLOPE, 18"PIPE	EA	3		$0.00
430612129	U-ENDWALL WITH GRATE, STD 261, 1:4 SLOPE, 24"PIPE	EA	3		$0.00
430612133	U-ENDWALL, GRATE, STD 261, 1:4 SLOPE, 30" PIPE	EA	3		$0.00
430612329	U-ENDWALL WITH GRATE, STD 261, 1:2 SLOPE, 24"PIPE	EA	3		$0.00
430612333	U-ENDWALL, GRATE, STD 261, 1:2 SLOPE, 30" PIPE	EA	3		$0.00
430613025	U-ENDWALL, WITH BAFFLES & GRATE, STD 261,1:6 SLOPE, 18"	EA	3		$0.00
430613029	U-ENDWALL, WITH BAFFLES & GRATE, STD 261,1:6 SLOPE, 24"PIPE	EA	3		$0.00
430613033	U-ENDWALL, WITH BAFFLES & GRATE, STD 261,1:6 SLOPE, 30"	EA	3		$0.00
430613123	U-ENDWALL, WITH BAFFLES & GRATE, STD 261,1:4 SLOPE,15"PIPE	EA	3		$0.00
430613125	U-ENDWALL, WITH BAFFLES & GRATE, STD 261,1:4 SLOPE,18"PIPE	EA	3		$0.00
430613129	U-ENDWALL, WITH BAFFLES & GRATE, STD 261,1:4 SLOPE, 24"PIPE	EA	3		$0.00
430613133	U-ENDWALL, WITH BAFFLES & GRATE, STD 261,1:4 SLOPE,30"PIPE	EA	3		$0.00
430613225	U-ENDWALL, WITH BAFFLES & GRATE, STD 261,1:3 SLOPE,18"PIPE	EA	3		$0.00
430613229	U-ENDWALL, WITH BAFFLES & GRATE, STD 261,1:3 SLOPE, 24 "PIPE	EA	3		$0.00
430613233	U-ENDWALL, WITH BAFFLES & GRATE, STD 261,1:3 SLOPE,30"PIPE	EA	3		$0.00
430613325	U-ENDWALL, WITH BAFFLES & GRATE, STD 261,1:2 SLOPE,18"PIPE	EA	3		$0.00
430613333	U-ENDWALL, WITH BAFFLES & GRATE, STD 261,1:2 SLOPE,30"PIPE	EA	3		$0.00
430830	PIPE FILLING AND PLUGGING- PLACE OUT OF SERVICE	CY	20		$0.00
430950	DESILTING CONCRETE BOX CULVERT	CY	20		$0.00
0430963 1	PVC PIPE FOR BACK OF SIDEWALK, 4"	LF	50		$0.00
430982120	MITERED END SECTION, OPTIONAL ROUND, 8" CD	EA	3		$0.00
430982121	MITERED END SECTION, OPTIONAL ROUND, 12" CD	EA	3		$0.00
430982123	MITERED END SECTION, OPTIONAL ROUND, 15" CD	EA	3		$0.00
430982125	MITERED END SECTION, OPTIONAL ROUND, 18" CD	EA	3		$0.00
430982129	MITERED END SECTION, OPTIONAL ROUND, 24" CD	EA	3		$0.00
430982133	MITERED END SECTION, OPTIONAL ROUND, 30" CD	EA	3		$0.00
430982138	MITERED END SECTION, OPTIONAL ROUND, 36" CD	EA	3		$0.00
430982140	MITERED END SECTION, OPTIONAL ROUND, 42" CD	EA	3		$0.00

430982141	MITERED END SECTION, OPTIONAL ROUND, 48" CD	EA	3		$0.00
430982142	MITERED END SECTION, OPTIONAL ROUND, 54" CD	EA	3		$0.00
430982143	MITERED END SECTION, OPTIONAL ROUND, 60" CD	EA	3		$0.00
430982144	MITERED END SECTION, OPTIONAL ROUND, 66" CD	EA	3		$0.00
430982145	MITERED END SECTION, OPTIONAL ROUND, 72" CD	EA	3		$0.00
430982147	MITERED END SECTION, OPTIONAL ROUND, 84" CD	EA	3		$0.00
430982623	MITERED END SECTION, OPTIONAL - ELLIPTICAL / ARCH, 15" CD	EA	3		$0.00
430982625	MITERED END SECTION, OPTIONAL - ELLIPTICAL / ARCH, 18" CD	EA	3		$0.00
430982629	MITERED END SECTION, OPTIONAL - ELLIPTICAL / ARCH, 24" CD	EA	3		$0.00
430982633	MITERED END SECTION, OPTIONAL - ELLIPTICAL / ARCH, 30" CD	EA	3		$0.00
430982638	MITERED END SECTION, OPTIONAL - ELLIPTICAL / ARCH, 36" CD	EA	3		$0.00
430982640	MITERED END SECTION, OPTIONAL - ELLIPTICAL / ARCH, 42" CD	EA	3		$0.00
430982641	MITERED END SECTION, OPTIONAL - ELLIPTICAL / ARCH, 48" CD	EA	3		$0.00
430982642	MITERED END SECTION, OPTIONAL - ELLIPTICAL / ARCH, 54" CD	EA	3		$0.00
430982643	MITERED END SECTION, OPTIONAL - ELLIPTICAL / ARCH, 60" CD	EA	3		$0.00
430982645	MITERED END SECTION, OPTIONAL - ELLIPTICAL / ARCH, 72" CD	EA	3		$0.00
430984120	MITERED END SECTION, OPTIONAL ROUND, 8" SD	EA	3		$0.00
430984121	MITERED END SECTION, OPTIONAL ROUND, 12" SD	EA	3		$0.00
430984123	MITERED END SECTION, OPTIONAL ROUND, 15" SD	EA	3		$0.00
430984125	MITERED END SECTION, OPTIONAL ROUND, 18" SD	EA	3		$0.00
430984129	MITERED END SECTION, OPTIONAL ROUND, 24" SD	EA	3		$0.00
430984133	MITERED END SECTION , OPTIONAL ROUND, 30" SD	EA	3		$0.00
430984138	MITERED END SECTION , OPTIONAL ROUND, 36" SIDE DRAIN	EA	3		$0.00
430984140	MITERED END SECTION , OPTIONAL ROUND, 42" SD	EA	3		$0.00
430984141	MITERED END SECTION , OPTIONAL ROUND, 48" SD	EA	3		$0.00
430984142	MITERED END SECTION , OPTIONAL ROUND, 54" SD	EA	3		$0.00
430984143	MITERED END SECTION , OPTIONAL ROUND, 60" SD	EA	3		$0.00
430984144	MITERED END SECTION, OPTIONAL ROUND, 66" SIDE DRAIN	EA	3		$0.00
430984145	MITERED END SECTION, OPTIONAL ROUND, 72" SIDE DRAIN	EA	3		$0.00

430984147	MITERED END SECTION, OPTIONAL ROUND, 84" SD	EA	3		$0.00
430984623	MITERED END SECTION, OPTIONAL OTHER - ELLIP/ARCH, 15" SD	EA	3		$0.00
430984625	MITERED END SECT, OPTIONAL - ELLIPTICAL / ARCH, 18" SD	EA	3		$0.00
430984629	MITERED END SECT, OPTIONAL - ELLIPTICAL / ARCH, 24" SD	EA	3		$0.00
430984633	MITERED END SECT, OPTIONAL /ELLIP/ARCH, 30" SD	EA	3		$0.00
430984638	MITERED END SECT, OPTIONAL /ELLIP/ARCH, 36" SD	EA	3		$0.00
430984640	MITERED END SECT, OPTIONAL /ELLIP/ARCH, 42" SD	EA	3		$0.00
430984641	MITERED END SECT, OPTIONAL /ELLIP/ARCH, 48" SD	EA	3		$0.00
430984642	MITERED END SECT, OPTIONAL /ELLIP/ARCH, 54" SD	EA	3		$0.00
430984643	MITERED END SECTION, OPTIONAL SHAPE /ELLIP/ARCH, 60" SIDE DRAIN	EA	3		$0.00
430984644	MITERED END SECT, OPTIONAL /ELLIP/ARCH, 66" SD	EA	3		$0.00
430984645	MITERED END SECT, OPTIONAL /ELLIP/ARCH, 72" SD	EA	3		$0.00
430990	MITERED END SECT, REPLACE GRATE	EA	3		$0.00
0431 1 1	PIPE LINER, OPTIONAL MATERIAL, 0-24"	LF	50		$0.00
0431 1 2	PIPE LINER, OPTIONAL MATERIAL, 25-36"	LF	50		$0.00
0431 1 3	PIPE LINER, OPTIONAL MATERIAL, 37-48"	LF	50		$0.00
0431 1 4	PIPE LINER, OPTIONAL MATERIAL, 49 - 60"	LF	50		$0.00
0431 1 5	PIPE LINER, OPTIONAL MATERIAL, 61" AND GREATER	LF	50		$0.00
0436 1 1	TRENCH DRAIN, STANDARD	LF	50		$0.00
0440 1 10	UNDERDRAIN, TYPE I	LF	50		$0.00
0440 1 20	UNDERDRAIN, TYPE II	LF	50		$0.00
0440 1 30	UNDERDRAIN, TYPE III	LF	50		$0.00
0440 1 50	UNDERDRAIN, TYPE V	LF	50		$0.00
0440 70	UNDERDRAIN INSPECTION BOX	EA	5		$0.00
0440 73 1	UNDERDRAIN OUTLET PIPE, 4"	LF	50		$0.00
0440 73 2	UNDERDRAIN OUTLET PIPE, 6"	LF	50		$0.00
0440 73 3	UNDERDRAIN OUTLET PIPE, 8"	LF	50		$0.00
0440 73 4	UNDERDRAIN OUTLET PIPE, 10"	LF	50		$0.00
0440 73 5	UNDERDRAIN OUTLET PIPE, 12"	LF	50		$0.00

0443 70 3	FRENCH DRAIN, 18"	LF	50		$0.00
0443 70 4	FRENCH DRAIN, 24"	LF	50		$0.00
0443 70 5	FRENCH DRAIN, 30"	LF	50		$0.00
0443 70 6	FRENCH DRAIN, 36"	LF	50		$0.00
0443 70 7	FRENCH DRAIN, 42"	LF	50		$0.00
0443 70 8	FRENCH DRAIN, 48"	LF	50		$0.00
0443 70 9	FRENCH DRAIN, 54"	LF	50		$0.00
0443 70 10	FRENCH DRAIN, 60"	LF	50		$0.00
0443 72 10	FRENCH DRAIN- AGGREGATE WITHOUT PIPE, 0-0.9’ DEPTH	SY	10		$0.00
0443 72 11	FRENCH DRAIN- AGGREGATE WITHOUT PIPE, 1-1.9’ DEPTH	SY	10		$0.00
0443 72 12	FRENCH DRAIN- AGGREGATE WITHOUT PIPE, 2-2.9’ DEPTH	SY	10		$0.00
0443 72 13	FRENCH DRAIN- AGGREGATE WITHOUT PIPE, 3-3.9’ DEPTH	SY	10		$0.00
0443 72 14	FRENCH DRAIN- AGGREGATE WITHOUT PIPE, 4-4.9’ DEPTH	SY	10		$0.00
0446 1 1	EDGEDRAIN DRAINCRETE, STANDARD	LF	50		$0.00
0446 71 1	EDGEDRAIN OUTLET PIPE, 4"	LF	50		$0.00
0515 1 1	PIPE HANDRAIL - GUIDERAIL, STEEL	LF	50		$0.00
0515 1 2	PIPE HANDRAIL - GUIDERAIL, ALUMINUM	LF	50		$0.00
0515 1 41	PIPE HANDRAIL - GUIDERAIL, RELOCATE, STEEL	LF	50		$0.00
0515 1 42	PIPE HANDRAIL - GUIDERAIL, RELOCATE, ALUMINUM	LF	50		$0.00
0515 2111	PEDESTRIAN / BICYCLE RAILING, NS, 42" TYPE 1	LF	50		$0.00
0515 2211	PEDESTRIAN / BICYCLE RAILING, STEEL, 42" TYPE 1	LF	50		$0.00
0515 2212	PEDESTRIAN / BICYCLE RAILING, STEEL, 42" TYPE 2	LF	50		$0.00
0515 2213	PEDESTRIAN / BICYCLE RAILING, STEEL, 42" TYPE 3	LF	50		$0.00
0515 2221	PEDESTRIAN/ BICYCLE RAILING, STEEL ONLY,54" TYPE 1	LF	50		$0.00
0515 2231	PEDESTRIAN/ BICYCLE RAILING, STEEL ONLY,48" TYPE 1	LF	50		$0.00
0515 2311	PEDESTRIAN/ BICYCLE RAILING, ALUMINUM ONLY,42" TYPE 1	LF	50		$0.00
0515 2312	PEDESTRIAN / BICYCLE RAILING, ALUMINUM, 42" TYPE 2	LF	50		$0.00
0515 2313	PEDESTRIAN / BICYCLE RAILING, ALUMINUM, 42" TYPE 3	LF	50		$0.00
0515 2321	PEDESTRIAN/ BICYCLE RAILING, ALUMINUM ONLY,54" TYPE 1	LF	50		$0.00

0515 2411	PEDESTRIAN / BICYCLE RAILING, SPECIAL MATERIALS- WEATHERING STEEL, 42" TYPE 1	LF	50		$0.00
0515 2500	PEDESTRIAN / BICYCLE RAILING, RELOCATE	LF	50		$0.00
0519 78	BOLLARDS	EA	10		$0.00
0520 1 7	CONCRETE CURB & GUTTER, TYPE E	LF	1000		$0.00
0520 1 10	CONCRETE CURB & GUTTER, TYPE F	LF	5000		$0.00
0520 1 11	CONCRETE CURB & GUTTER, VARIABLE HEIGHT TYPE F	LF	100		$0.00
0520 1 12	CONCRETE CURB & GUTTER, TYPE F WITH SPECIAL GUTTER PROFILE	LF	100		$0.00
0520 2 1	CONCRETE CURB, TYPE A	LF	100		$0.00
0520 2 2	CONCRETE CURB, TYPE B	LF	1000		$0.00
0520 2 4	CONCRETE CURB, TYPE D	LF	1000		$0.00
0520 3	VALLEY GUTTER- CONCRETE	LF	100		$0.00
0520 5 11	TRAFFIC SEPARATOR CONCRETE - TYPE I, 4' WIDE	LF	50		$0.00
0520 5 12	TRAFFIC SEPARATOR CONCRETE - TYPE I, 6' WIDE	LF	50		$0.00
520 5 16	TRAFFIC SEPARATOR CONCRETE- TYPE I, 8.5' WIDE	LF	50		$0.00
0520 5 21	TRAFFIC SEPARATOR - CONCRETE, TYPE II, 4' WIDE	LF	50		$0.00
0520 5 22	TRAFFIC SEPARATOR - CONCRETE, TYPE II, 6' WIDE	LF	50		$0.00
0520 5 26	TRAFFIC SEPARATOR CONCRETE- TYPE II, 8.5' WIDE	LF	50		$0.00
0520 5 41	TRAFFIC SEPARATOR CONCRETE, TYPE IV, 4' WIDE	LF	50		$0.00
0520 5 42	TRAFFIC SEPARATOR CONCRETE, TYPE IV, 6' WIDE	LF	50		$0.00
0520 5 46	TRAFFIC SEPARATOR CONCRETE, TYPE IV, 8.5' WIDE	LF	50		$0.00
0520 5 51	TRAF SEP CONC, TYPE V, 4' WIDE	LF	50		$0.00
0520 6	SHOULDER GUTTER- CONCRETE	LF	50		$0.00
0520 70	CONCRETE TRAFFIC SEPARATOR, SPECIAL - VARIABLE WIDTH	SY	50		$0.00
0521 72 2	SHOULDER CONCRETE BARRIER WALL, BOX CULVERT	LF	100		$0.00
0521 72 3	SHOULDER CONCRETE BARRIER WALL, RIGID-SHOULDER	LF	100		$0.00
0521 72 4	SHOULDER CONCRETE BARRIER WALL, RIGID RETAINING	LF	100		$0.00
0521 72 5	SHOULDER CONCRETE BARRIER WALL, RIGID-CURB & GUTTER	LF	100		$0.00
0521 72 10	SHOULDER CONCRETE BARRIER WALL, RIGID SHOULDER 42"	LF	100		$0.00
0521 72 11	SHOULDER CONCRETE BARRIER WALL, RIGID SHOULDER 54"	LF	100		$0.00

0521 73	CONCRETE BARRIER WALL, REMOVAL	LF	20		$0.00
0522 1	CONCRETE SIDEWALK AND DRIVEWAY, 4" THICK	SY	3000		$0.00
0522 2	CONCRETE SIDEWALK AND DRIVEWAY, 6" THICK	SY	500		$0.00
0522 3	BUS BOARDING PAD - CONCRETE	SY	50		$0.00
0522 4	BUS SHELTER PAD - CONCRETE	SY	50		$0.00
0524 1 1	CONCRETE DITCH PAVT, NON REINFORCED, 3"	SY	10		$0.00
0524 1 2	CONCRETE DITCH PAVEMENT, NON REINFORCED, 4"	SY	10		$0.00
0524 1 3	CONCRETE DITCH PAVEMENT, NON REINFORCED, 5"	SY	10		$0.00
0524 1 4	CONCRETE DITCH PAVEMENT, NON REINFORCED, 6"	SY	10		$0.00
0524 1 19	CONCRETE DITCH PAVT, 3", REINFORCED	SY	10		$0.00
0524 1 29	CONCRETE DITCH PAVEMENT, 4", REINFORCED	SY	10		$0.00
0524 1 49	CONCRETE DITCH PAVEMENT, 6", REINFORCED	SY	10		$0.00
0524 2 1	CONCRETE SLOPE PAVEMENT,NON REINFORCED, 3"	SY	10		$0.00
0524 2 2	CONCRETE SLOPE PAVEMENT,NON REINFORCED, 4"	SY	10		$0.00
0524 2 4	CONCRETE SLOPE PAVEMENT,NON REINFORCED, 6"	SY	10		$0.00
0524 2 29	CONCRETE SLOPE PAVEMENT, 4", REINFORCED	SY	10		$0.00
0524 2 49	CONCRETE SLOPE PAVEMENT, 6", REINFORCED	SY	10		$0.00
0524 3	CONC CORE DITCH BLOCKS	CY	10		$0.00
0526 1 1	PAVERS, ARCHITECTURAL, ROADWAY	SY	50		$0.00
0526 1 2	PAVERS, ARCHITECTURAL, SIDEWALK	SY	50		$0.00
0527 2	DETECTABLE WARNINGS	SF	1000		$0.00
0530 1	RIPRAP, SAND-CEMENT	CY	50		$0.00
0530 3 3	RIPRAP- RUBBLE, BANK AND SHORE	TN	10		$0.00
0530 3 4	RIPRAP, RUBBLE, F&I, DITCH LINING	TN	10		$0.00
0530 3 5	RIPRAP- RUBBLE, COASTAL SHORE- LARGE BOULDERS	TN	10		$0.00
0530 74	BEDDING STONE	TN	10		$0.00
0536 1 0	GUARDRAIL -ROADWAY, GENERAL TL-2	LF	250		$0.00
0536 1 1	GUARDRAIL -ROADWAY, GENERAL TL-3	LF	250		$0.00
0536 1 3	GUARDRAIL ROADWAY, DOUBLE FACE	LF	250		$0.00

0536 1 11	GUARDRAIL, ROADWAY, MODIFIED THRIE BEAM	LF	250		$0.00
0536 1 12	GUARDRAIL ROADWAY, MODIFIED THRIE BEAM-DOUBLE FACE	LF	250		$0.00
0536 5 1	RUB RAIL FOR GUARDRAIL, SINGLE SIDED	LF	250		$0.00
0536 5 2	RUB RAIL FOR GUARDRAIL, DOUBLE SIDED	LF	250		$0.00
0536 7 1	SPECIAL GUARDRAIL POST- DEEP POST FOR SLOPE BREAK CONDITION-TIMBER OR STEEL	EA	5		$0.00
0536 7 2	SPECIAL GUARDRAIL POST- SPECIAL STEEL POST FOR CONCRETE STRUCTURE MOUNT	EA	5		$0.00
0536 7 3	SPECIAL GUARDRAIL POST- ENCASED POST FOR SHALLOW MOUNT	EA	5		$0.00
0536 7 4	SPECIAL GUARDRAIL POST- FRANGIBLE LEAVE-OUT FOR MOUNTING THROUGH CONCRETE SURFACE	EA	5		$0.00
0536 8 11	APPROACH TRANSITION TO RIGID BARRIER- BRIDGE ANCHORAGE ASSEMBLY CONNECTION, FURNISH & INSTALL	EA	5		$0.00
0536 8 12	APPROACH TRANSITION CONNECTION TO RIGID BARRIER, FURNISH AND INSTALL, TL-2	EA	5		$0.00
0536 8 13	APPROACH TRANSITION CONNECTION TO RIGID BARRIER, FURNISH AND INSTALL, TL-3	EA	5		$0.00
0536 8 40	APPROACH TRANSITION TO RIGID BARRIER- BRIDGE ANCHORAGE ASSEMBLY, RELOCATE	EA	5		$0.00
0536 8 60	APPROACH TRANSITION TO RIGID BARRIER- BRIDGE ANCHORAGE ASSEMBLY, REMOVE	EA	5		$0.00
0536 73	GUARDRAIL REMOVAL	LF	25		$0.00
0536 85 22	GUARDRAIL END ANCHORAGE ASSEMBLY/END TREATMENT- FLARED	EA	2		$0.00
0536 85 24	GUARDRAIL END ANCHORAGE ASSEMBLY/END TREATMENT- PARALLEL	EA	2		$0.00
0536 85 25	GUARDRAIL END ANCHORAGE ASSEMBLY/END TREATMENT- TYPE II	EA	2		$0.00
0536 85 26	GUARDRAIL END ANCHORAGE ASSEMBLY/END TREATMENT- TYPE CRT	EA	2		$0.00
0536 85 27	GUARDRAIL END ANCHORAGE ASSEMBLY/END TREATMENT- DOUBLE FACE TERMINAL	EA	2		$0.00
0538 1	GUARDRAIL- RESET	LF	25		$0.00
0539 80111	OPAQUE VISUAL BARRIER, F&I, CONCRETE, 2' 3"	LF	25		$0.00
0544 74 40	RELOCATE CRASH CUSHION - ALL OPTIONS	EA	2		$0.00
0544 75 1	CRASH CUSHION	EA	2		$0.00
0546 71	RUMBLE STRIPS	PS	10		$0.00
0546 72 52	RUMBLE STRIPS, GROUND-IN, 16" CENTERLINE USED WITH RUMBLE STRIPE	GM	1		$0.00
0546 72 53	RUMBLE STRIPS, GROUND-IN, 8" EDGELINE USED WITH RUMBLE STRIPE	GM	1		$0.00
0546 72 55	RUMBLE STRIPS, GROUND-IN, 16" SHOULDER	GM	1		$0.00
0550 10110	FENCING, TYPE A, 0.0-5.0', STANDARD	LF	25		$0.00
0550 10118	FENCING, TYPE A, 0.0-5.0', TYPE A STANDARD, RESET EXISTING	LF	25		$0.00

0550 10119	FENCING, TYPE A, 0.0-5.0', SPECIAL FEATURES	LF	25		$0.00
0550 10120	FENCING, TYPE A, 5.1-6.0, STANDARD	LF	25		$0.00
0550 10128	FENCING, TYPE A, 5.1-6.0', RESET EXISTING	LF	25		$0.00
0550 10130	FENCING, TYPE A, 6.1-7.0, STANDARD	LF	25		$0.00
0550 10140	FENCING, TYPE A, 7.1-8.0', STANDARD	LF	25		$0.00
0550 10148	FENCING, TYPE A, 7.1-8.0', RESET EXISTING	LF	25		$0.00
0550 10149	FENCING, TYPE A, 7.1-8.0', SPECIAL FEATURES	LF	25		$0.00
0550 10150	FENCING, TYPE A, 8.1-10.0', STANDARD	LF	25		$0.00
0550 10158	FENCING, TYPE A, 8.1-10.0', RESET EXISTING	LF	25		$0.00
0550 10159	FENCING, TYPE A, 8.1-10.0', SPECIAL FEATURES	LF	25		$0.00
0550 10169	FENCING, TYPE A, 10.1-12.0', SPECIAL FEATURES	LF	25		$0.00
0550 10210	FENCING, TYPE B, 0.0-5.0', STANDARD FEATURES	LF	25		$0.00
0550 10212	FENCING, TYPE B, 0.5-5.0', W/ VINYL COATING	LF	25		$0.00
0550 10218	FENCING, TYPE B, 0.0-5.0', RESET EXISTING	LF	25		$0.00
0550 10219	FENCING, TYPE B, 0.0-5.0', SPECIAL FEATURES	LF	25		$0.00
0550 10220	FENCING, TYPE B, 5.1-6.0', STANDARD	LF	25		$0.00
0550 10221	FENCING, TYPE B, 5.1-6.0', W/ BARB WIRE ATTMT	LF	25		$0.00
0550 10222	FENCING, TYPE B, 5.1-6.0, W/ VINYL COATING	LF	25		$0.00
0550 10228	FENCING, TYPE B, 5.1-6.0, RESET EXISTING	LF	25		$0.00
0550 10229	FENCING, TYPE B, 5.1-6.0, SPECIAL FEATURES	LF	25		$0.00
0550 10230	FENCING, TYPE B, 6.1-7.0', STANDARD	LF	25		$0.00
0550 10231	FENCING, TYPE B, 6.1-7.0, W/ BARB WIRE ATTMT	LF	25		$0.00
0550 10232	FENCING, TYPE B, 6.1-7.0, W/ VINYL COATING	LF	25		$0.00
0550 10238	FENCING, TYPE B, 6.1-7.0, RESET EXISTING	LF	25		$0.00
0550 10240	FENCING, TYPE B, 7.1-8.0', STANDARD	LF	25		$0.00
0550 10242	FENCING, TYPE B, 7.1-8.0', VINYL COATING	LF	25		$0.00
0550 10248	FENCING, TYPE B, 7.1-8.0, RESET EXISTING	LF	25		$0.00
0550 10250	FENCING, TYPE B, 8.1-10.0', STANDARD FEATURES	LF	25		$0.00
0550 10251	FENCING, TYPE B, 8.1-10.0', WITH BARBED WIRE ATTMT	LF	25		$0.00

0550 10252	FENCING, TYPE B, 8.1-10.0', VINYL COATING	LF	25		$0.00
0550 10256	FENCING, TYPE B, 8-10.0', WITH VINYL COATING AND BARBED WIRE ATTACHMENT	LF	25		$0.00
0550 10258	FENCING, TYPE B, 8.1-10.0', RESET EXISTING FENCE	LF	25		$0.00
0550 10259	FENCING, TYPE B, 8.1-10.0', SPECIAL	LF	25		$0.00
0550 10266	FENCING, TYPE B, 10.1-12.0', WITH VINYL COATING AND BARBED WIRE ATTACHMENT	LF	25		$0.00
0550 10315	FENCING, TYPE R, 0-5.0', VERTICAL	LF	25		$0.00
0550 10325	FENCING, TYPE R, 5.1-6.0', VERTICAL	LF	25		$0.00
0550 10335	FENCING, TYPE R, 6.1-7.0', VERTICAL	LF	25		$0.00
0550 10343	FENCING, TYPE R, 7.1-8.0, W/FULL ENCLOSURE	LF	25		$0.00
0550 10344	FENCING, TYPE R, 7.1-8.0, W / PARTIAL ENCLOSURE	LF	25		$0.00
0550 10353	FENCING, TYPE R, 8.1 - 10.0', WITH FULL ENCLOSURE	LF	25		$0.00
0550 10354	FENCING, TYPE R, 8.1-10.0', WITH PARTIAL ENCLOSURE, TYPE R ONLY	LF	25		$0.00
0550 10355	FENCING, TYPE R, 8.1-10.0', VERTICAL	LF	25		$0.00
0550 10363	FENCING, TYPE R, GREATER THAN 10.0', WITH FULL ENCLOSURE	LF	25		$0.00
0570 1 2	PERFORMANCE TURF, SOD	SY	1500		$0.00
0571 1 11	PLASTIC EROSION MAT, TURF REINFORCED MAT, TYPE 1	SY	100		$0.00
0571 1 12	PLASTIC EROSION MAT, TRM, TYPE 2	SY	100		$0.00
0571 1 13	PLASTIC EROSION MAT, TURF REINFORCED MAT, TYPE 3	SY	100		$0.00
0591 1 2	4" LANDSCAPE SLEEVE (UNDERGROUND)	LF	50		$0.00
0591 1 2A	4" LANDSCAPE SLEEVE (BORED)	LF	50		$0.00
0630 2 11	CONDUIT, FURNISH & INSTALL, OPEN TRENCH	LF	1000		$0.00
0630 2 12	CONDUIT, FURNISH & INSTALL, DIRECTIONAL BORE	LF	1000		$0.00
0630 2 14	CONDUIT, FURNISH & INSTALL, ABOVEGROUND	LF	1000		$0.00
0630 2 15	CONDUIT, FURNISH & INSTALL, BRIDGE MOUNT	LF	100		$0.00
0630 2 65	CONDUIT, REMOVE, BRIDGE MOUNT	LF	100		$0.00
0654 001	RECTANGULAR RAPID FLASHING BEACON ASSEMBLY	EA	2		$0.00
0660 2101	LOOP ASSEMBLY- F&I, TYPE A	AS	20		$0.00
0660 2102	LOOP ASSEMBLY, F&I, TYPE B	AS	20		$0.00
0660 2103	LOOP ASSEMBLY, F&I, TYPE C	AS	20		$0.00

0660 2104	LOOP ASSEMBLY, F&I, TYPE D	AS	20		$0.00
0660 2105	LOOP ASSEMBLY, F&I, TYPE E	AS	20		$0.00
0660 2106	LOOP ASSEMBLY, F&I, TYPE F	AS	20		$0.00
0660 2107	LOOP ASSEMBLY, F&I, TYPE G	AS	20		$0.00
0660 3 11	VEHICLE DETECTION SYSTEM- MICROWAVE, FURNISH & INSTALL CABINET EQUIPMENT	EA	5		$0.00
0660 3 12	VEHICLE DETECTION SYSTEM- MICROWAVE, FURNISH & INSTALL, ABOVE GROUND EQUIPMENT	EA	5		$0.00
0700 1 11	SINGLE POST SIGN, F&I GROUND MOUNT, UP TO 12 SF	AS	50		$0.00
0700 1 12	SINGLE POST SIGN, F&I GROUND MOUNT, 12-20 SF	AS	20		$0.00
0700 1 13	SINGLE POST SIGN, F&I GROUND MOUNT, 21-30 SF	AS	5		$0.00
0700 1 14	SINGLE POST SIGN, F&I GROUND MOUNT, 31+ SF	AS	5		$0.00
0700 1 18	SINGLE POST SIGN, F&I GROUND MOUNT, IN-STREET FLEXIBLE POST	AS	5		$0.00
0700 1 21	SINGLE POST SIGN, F&I BARRIER MOUNT INDEX 11871 UP TO 12 SF	AS	5		$0.00
0700 1 22	SINGLE POST SIGN, F&I BARRIER MOUNT INDEX 11871 12-20 SF	AS	5		$0.00
0700 1 23	SINGLE POST SIGN, F&I BARRIER MOUNT INDEX 11871, 21-30 SF SHEETING AREA- BACK TO BACK	AS	5		$0.00
0700 1 31	SINGLE POST SIGN, F&I BRIDGE MOUNT INDEX 11870, UP TO 12 SF	AS	5		$0.00
0700 1 32	SINGLE POST SIGN, F&I BRIDGE MOUNT INDEX 11870, 12-20 SF	AS	5		$0.00
0700 1 33	SINGLE POST SIGN, F&I BRIDGE MOUNT INDEX 11870, 21-30 SF	AS	5		$0.00
0700 1 40	SINGLE POST SIGN, INSTALL	AS	5		$0.00
0700 1 50	SINGLE POST SIGN, RELOCATE	AS	10		$0.00
0700 1 60	SINGLE POST SIGN, REMOVE	AS	50		$0.00
0700 1 74	SINGLE POST SIGN, F&I CUSTOM, 31+ SF	AS	5		$0.00
0700 2 11	MULTI- POST SIGN, F&I GROUND MOUNT, UP TO 12 SF	AS	5		$0.00
0700 2 12	MULTI- POST SIGN, F&I GROUND MOUNT, 12-20 SF	AS	5		$0.00
0700 2 13	MULTI- POST SIGN, F&I GROUND MOUNT, 21-30 SF	AS	5		$0.00
0700 2 14	MULTI- POST SIGN, F&I GROUND MOUNT, 31-50 SF	AS	5		$0.00
0700 2 15	MULTI- POST SIGN, F&I GROUND MOUNT, 51-100 SF	AS	5		$0.00
0700 2 16	MULTI- POST SIGN, F&I GROUND MOUNT, 101-200 SF	AS	5		$0.00
0700 2 40	MULTI- POST SIGN, INSTALL	AS	5		$0.00
0700 2 50	MULTI- POST SIGN, F&I GROUND MOUNT, RELOCATE	AS	5		$0.00

0700 2 60	MULTI- POST SIGN, F&I GROUND MOUNT, REMOVE	AS	5		$0.00
0700 2 80	MULTI- POST SIGN, F&I GROUND MOUNT, REPAIR	AS	5		$0.00
0700 3101	SIGN PANEL, FURNISH & INSTALL GROUND MOUNT, UP TO 12 SF	EA	5		$0.00
0700 3102	SIGN PANEL, FURNISH & INSTALL GROUND MOUNT, 12-20 SF	EA	5		$0.00
0700 3103	SIGN PANEL, FURNISH & INSTALL GROUND MOUNT, 21-30 SF	EA	5		$0.00
0700 3104	SIGN PANEL, FURNISH & INSTALL GROUND MOUNT, 31-50 SF	EA	5		$0.00
0700 3105	SIGN PANEL, FURNISH & INSTALL GROUND MOUNT, 51-100 SF	EA	5		$0.00
0700 3106	SIGN PANEL, FURNISH & INSTALL GROUND MOUNT, 101-200 SF	EA	5		$0.00
0700 3201	SIGN PANEL, FURNISH & INSTALL OVERHEAD MOUNT, UP TO 12 SF	EA	5		$0.00
0700 3202	SIGN PANEL, FURNISH & INSTALL OVERHEAD MOUNT, 12-20 SF	EA	5		$0.00
0700 3203	SIGN PANEL, FURNISH & INSTALL OVERHEAD MOUNT, 21-30 SF	EA	5		$0.00
0700 3204	SIGN PANEL, FURNISH & INSTALL OVERHEAD MOUNT, 31-50 SF	EA	5		$0.00
0700 3205	SIGN PANEL, FURNISH & INSTALL OVERHEAD MOUNT, 51-100 SF	EA	5		$0.00
0700 3206	SIGN PANEL, FURNISH & INSTALL OVERHEAD MOUNT, 101-200 SF	EA	5		$0.00
0700 3401	SIGN PANEL, INSTALL, UP TO 12 SF	EA	5		$0.00
0700 3402	SIGN PANEL, INSTALL, 12-20 SF	EA	5		$0.00
0700 3403	SIGN PANEL, INSTALL, 21-30 SF,	EA	5		$0.00
0700 3404	SIGN PANEL, INSTALL, 31-50 SF	EA	5		$0.00
0700 3405	SIGN PANEL, INSTALL, 51-100 SF,	EA	5		$0.00
0700 3406	SIGN PANEL, INSTALL, 101-200 SF	EA	5		$0.00
0700 3501	SIGN PANEL, RELOCATE, UP TO 12 SF	EA	5		$0.00
0700 3502	SIGN PANEL, RELOCATE, 12-20 SF	EA	5		$0.00
0700 3503	SIGN PANEL, RELOCATE, 21-30 SF	EA	5		$0.00
0700 3504	SIGN PANEL, RELOCATE, 31-50 SF	EA	5		$0.00
0700 3505	SIGN PANEL, RELOCATE, 51-100 SF	EA	5		$0.00
0700 3506	SIGN PANEL, RELOCATE, 101-200 SF	EA	5		$0.00
0700 3601	SIGN PANEL, REMOVE, UP TO 12 SF	EA	5		$0.00
0700 3602	SIGN PANEL, REMOVE, 12-20 SF	EA	5		$0.00
0700 3603	SIGN PANEL, REMOVE, 21-30 SF	EA	5		$0.00

0700 3604	SIGN PANEL, REMOVE, 31-50 SF	EA	5		$0.00
0700 3605	SIGN PANEL, REMOVE, 51-100 SF	EA	5		$0.00
0700 3606	SIGN PANEL, REMOVE, 101-200 SF	EA	5		$0.00
0700 3624	SIGN PANEL, REMOVE, UP TO 50 SF WITH LIGHTING	EA	5		$0.00
0700 3625	SIGN PANEL, REMOVE, 51-100 SF WITH LIGHTING	EA	5		$0.00
0700 3626	SIGN PANEL, REMOVE, 101-200 SF WITH LIGHTING	EA	5		$0.00
0700 12 11	SIGN BEACON, F&I GROUND MOUNT- AC POWERED, ONE BEACON	AS	5		$0.00
0700 12 12	SIGN BEACON, F&I GROUND MOUNT- AC POWERED, TWO BEACONS	AS	5		$0.00
0700 12 21	SIGN BEACON, F&I GROUND MOUNT- SOLAR POWERED, ONE BEACON	AS	5		$0.00
0700 12 22	SIGN BEACON, F&I GROUND MOUNT- SOLAR POWERED, TWO BEACONS	AS	5		$0.00
0700 12 31	SIGN BEACON, F&I OVERHEAD MOUNT, ONE BEACON	AS	5		$0.00
0700 12 32	SIGN BEACON, F&I OVERHEAD MOUNT, TWO BEACONS	AS	5		$0.00
0700 12 50	SIGN BEACON, RELOCATE BEACON- SIGN TO REMAIN	AS	5		$0.00
0700 12 60	SIGN BEACON, REMOVE BEACON- SIGN TO REMAIN	AS	5		$0.00
0700 13 10	RETROREFLECTIVE SIGN STRIP- BACK OF RAIL ROAD CROSSBUCK SIGN BLADES	EA	5		$0.00
0700 13 12	RETROREFLECTIVE SIGN STRIP- FURNISH AND INSTALL, 2'	EA	5		$0.00
0700 13 15	RETROREFLECTIVE SIGN STRIP- FURNISH AND INSTALL, 5'	EA	5		$0.00
0701 17101	PROFILED THERMOPLASTIC,STANDARD- CONCRETE SURFACES, WHITE, SOLID,6"	GM	1		$0.00
0701 17201	PROFILED THERMOPLASTIC,STANDARD- CONCRETE SURFACES, YELLOW, SOLID,6"	GM	1		$0.00
0701 17221	PROFILED THERMOPLASTIC,STANDARD- CONCRETE SURFACES, YELLOW, SKIP,6"	GM	1		$0.00
0701 18101	PROFILED THERMOPLASTIC,STANDARD- ASPHALT SURFACES, WHITE, SOLID,6"	GM	1		$0.00
0701 18201	PROFILED THERMOPLASTIC,STANDARD- ASPHALT SURFACES, YELLOW, SOLID,6"	GM	1		$0.00
0701 18221	PROFILED THERMOPLASTIC,STANDARD- ASPHALT SURFACES, YELLOW, SKIP,6"	GM	1		$0.00
0705 10 1	OBJECT MARKER, TYPE 1	EA	5		$0.00
0705 10 2	OBJECT MARKER, TYPE 2	EA	5		$0.00
0705 10 3	OBJECT MARKER, TYPE 3	EA	5		$0.00
0705 10 4	OBJECT MARKER, TYPE 4	EA	5		$0.00
0705 11 1	DELINEATOR, FLEXIBLE TUBULAR	EA	50		$0.00
0705 11 2	DELINEATOR, NON-FLEXIBLE	EA	5		$0.00

0705 11 3	DELINEATOR, FLEXIBLE HIGH VISABILITY MEDIAN	EA	5		$0.00
0705 11 4	DELINEATOR, FLEXIBLE HIGH PERFORMANCE	EA	5		$0.00
0706 1 3	RAISED PAVEMENT MARKER, TYPE B	EA	200		$0.00
0710 90	PAINTED PAVEMENT MARKINGS, FINAL SURFACE	LS	5		$0.00
0710 11101	PAINTED PAVEMENT MARKINGS, STANDARD, WHITE, SOLID, 6"	GM	1		$0.00
0710 11102	PAINTED PAVEMENT MARKINGS, STANDARD, WHITE, SOLID FOR INTERCHANGE AND URBAN ISLAND, 8"	GM	1		$0.00
0710 11103	PAINTED PAVEMENT MARKINGS, STANDARD, WHITE, SOLID FOR INTERCHANGE MARKINGS, 12"	GM	1		$0.00
0710 11123	PAINTED PAVEMENT MARKINGS, STANDARD, WHITE, SOLID, 12"	LF	3000		$0.00
0710 11124	PAINTED PAVEMENT MARKINGS, STANDARD, WHITE, SOLID, 18"	LF	2000		$0.00
0710 11125	PAINTED PAVEMENT MARKINGS, STANDARD, WHITE, SOLID, 24"	LF	2000		$0.00
0710 11131	PAINTED PAVEMENT MARKINGS, STANDARD, WHITE, SKIP, 10-30 OR 3-9 SKIP, 6" WIDE	GM	1		$0.00
0710 11133	PAINTED PAVEMENT MARKING, STANDARD,WHITE, 3'-9' SKIP DROP LINE AND APPROACH TO TOLL PLAZA, 12" WIDE,	GM	1		$0.00
0710 11141	PAINTED PAVEMENT MARKINGS, STANDARD, WHITE, 2-4 DOTTED GUIDELINE/ 6-10 DOTTED EXTENSION, 6"	GM	1		$0.00
0710 11160	PAINTED PAVEMENT MARKINGS, STANDARD, WHITE, MESSAGE	EA	25		$0.00
0710 11170	PAINTED PAVEMENT MARKINGS, STANDARD, WHITE, ARROWS	EA	25		$0.00
0710 11180	PAINTED PAVEMENT MARKINGS, STANDARD, WHITE, YIELD LINE	LF	500		$0.00
0710 11190	PAINTED PAVEMENT MARKINGS, STANDARD, WHITE, ISLAND NOSE	SF	100		$0.00
0710 11201	PAINTED PAVEMENT MARKINGS, STANDARD, YELLOW, SOLID, 6"	GM	1		$0.00
0710 11202	PAINTED PAVEMENT MARKINGS, STANDARD, YELLOW, SOLID FOR INTERCHANGE AND URBAN ISLAND, 8"	GM	1		$0.00
0710 11203	PAINTED PAVEMENT MARKINGS, STANDARD, YELLOW, SOLID, 12"	GM	1		$0.00
0710 11223	PAINTED PAVEMENT MARKINGS, STANDARD, YELLOW, SOLID, 12"	LF	100		$0.00
0710 11224	PAINTED PAVEMENT MARKINGS, STANDARD, YELLOW, SOLID, 18"	LF	300		$0.00
0710 11225	PAINTED PAVEMENT MARKINGS, STANDARD, YELLOW, SOLID, 24"	LF	100		$0.00
0710 11231	PAINTED PAVEMENT MARKINGS, STANDARD, YELLOW, SKIP, 6"	GM	1		$0.00
0710 11241	PAINTED PAVEMENT MARKINGS, STANDARD, YELLOW, 2-4 DOTTED GUIDELINE/6-10 DOTTED EXTENSION, 6"	GM	1		$0.00
0710 11290	PAINTED PAVEMENT MARKINGS, STANDARD, YELLOW, ISLAND NOSE	SF	100		$0.00
0710 11331	PAINTED PAVEMENT MARKINGS, STANDARD,BLACK, SKIP, 6"	GM	1		$0.00
0710 11333	PAINTED PAVEMENT MARKING, STANDARD, BLACK, 3'-9' DOTTED LANE DROP AND APPROACH TO TOLL PLAZA, 12"	GM	1		$0.00
0710 11341	PAINTED PAVEMENT MARKINGS, STANDARD, BLACK, 2-4 DOTTED GUIDELINE/ 6-10 DOTTED EXTENSION, 6"	GM	1		$0.00

0710 11421	PAINTED PAVEMENT MARKINGS, STANDARD, BLUE, SOLID FOR PARKING LOT- ACCESSIBLE MARKINGS, 6"	LF	100		$0.00
0710 12231	PAINTED PAVEMENT MARKINGS, DURABLE, YELLOW, SKIP, 6"	GM	1		$0.00
0710 12421	PAINTED PAVEMENT MARKINGS, DURABLE, BLUE, SOLID FOR PARKING LOT-ACCESSIBLE MARKINGS, 6"	LF	100		$0.00
0711 11102	THERMOPLASTIC, STANDARD, WHITE, SOLID, 8" FOR INTERCHANGE AND URBAN ISLAND	GM	1		$0.00
0711 11103	THERMOPLASTIC, STANDARD, WHITE, SOLID, 12" FOR INTERCHANGE MARKINGS	GM	1		$0.00
0711 11123	THERMOPLASTIC, STANDARD, WHITE, SOLID, 12" FOR CROSSWALK AND ROUNDABOUT	LF	2500		$0.00
0711 11124	THERMOPLASTIC, STANDARD, WHITE, SOLID, 18" FOR DIAGONALS AND CHEVRONS	LF	500		$0.00
0711 11125	THERMOPLASTIC, STANDARD, WHITE, SOLID, 24" FOR STOP LINE AND CROSSWALK	LF	1500		$0.00
0711 11130	THERMOPLASTIC, STANDARD, WHITE, VERTICAL DEFLECTION MARKING	EA	10		$0.00
0711 11140	THERMOPLASTIC, STANDARD, WHITE, VERTICAL DEFLECTION ADVANCED WARNING MARKING	EA	10		$0.00
0711 11141	THERMOPLASTIC, STANDARD, WHITE, 2-4 DOTTED GUIDELINE/ 6-10 GAP EXTENSION, 6"	GM	1		$0.00
0711 11143	THERMOPLASTIC, STANDARD, WHITE, 2-4 DOTTED GUIDELINE, 12" FOR ROUNDABOUT	GM	1		$0.00
0711 11160	THERMOPLASTIC, STANDARD, WHITE, MESSAGE OR SYMBOL	EA	20		$0.00
0711 11170	THERMOPLASTIC, STANDARD, WHITE, ARROW	EA	20		$0.00
0711 11180	THERMOPLASTIC, STANDARD, WHITE, YIELD LINE	LF	250		$0.00
0711 11224	THERMOPLASTIC, STANDARD, YELLOW, SOLID, 18" FOR DIAGONAL OR CHEVRON	LF	250		$0.00
0711 11241	THERMOPLASTIC, STANDARD, YELLOW, 2-4 DOTTED GUIDE LINE /6-10 DOTTED EXTENSION LINE, 6"	GM	1		$0.00
0711 11421	THERMOPLASTIC, STANDARD, BLUE, SOLID,6"	LF	100		$0.00
0711 14123	THERMOPLASTIC, PREFORMED, WHITE, SOLID, 12"	LF	1000		$0.00
0711 14125	THERMOPLASTIC, PREFORMED, WHITE, SOLID, 24"	LF	1000		$0.00
0711 14141	THERMOPLASTIC, PREFORMED, WHITE, 2-4 DOTTED GUIDELINE ON CONCRETE SURFACES	GM	1		$0.00
0711 14160	THERMOPLASTIC, PREFORMED, WHITE, MESSAGE	EA	5		$0.00
0711 14170	THERMOPLASTIC, PREFORMED, WHITE, ARROWS	EA	20		$0.00
0711 14191	THERMOPLASTIC, PREFORMED, 6" WHITE, RAILROAD DYNAMIC ENVELOPE	LF	100		$0.00
0711 14193	THERMOPLASTIC, PREFORMED, 12" WHITE ON ASPHALT PAVEMENT, RAILROAD DYNAMIC ENVELOPE	LF	250		$0.00
0711 14194	THERMOPLASTIC, PREFORMED, 12" WHITE WITH 4" OUTSIDE BLACK CONTRAST ON CONCRETE PAVEMENT, RAILROAD DYNAMIC ENVELOPE	LF	100		$0.00
0711 14341	THERMOPLASTIC, PREFORMED, BLACK, 2-4 DOTTED GUIDELINE ON CONCRETE SURFACES	GM	1		$0.00
0711 14560	THERMOPLASTIC, PREFORMED, WHITE WITH BLACK CONTRAST ON CONCRETE PAVEMENT, MESSAGE OR SYMBOL	EA	5		$0.00
0711 14570	THERMOPLASTIC, PREFORMED, WHITE WITH BLACK CONTRAST, ARROW ON CONCRETE SURFACE	EA	5		$0.00

0711 15101	THERMOPLASTIC, STANDARD-OPEN GRADED ASPHALT SURFACES WHITE, SOLID, 6"	GM	1		$0.00
0711 15102	THERMOPLASTIC, STANDARD-OPEN GRADED ASPHALT SURFACES, WHITE, SOLID, 8"	GM	1		$0.00
0711 15131	THERMOPLASTIC, STANDARD-OPEN GRADED ASPHALT SURFACES, WHITE, SKIP, 6",10-30 SKIP OR 3-9 LANE DROP	GM	1		$0.00
0711 15133	THERMOPLASTIC, STANDARD-OPEN GRADED ASPHALT SURFACES, WHITE, SKIP, 12"- APPROACH TO TOLL PLAZA OR 3-9 LANE DROP	GM	1		$0.00
0711 15201	THERMOPLASTIC, STANDARD-OPEN GRADED ASPHALT SURFACES, YELLOW, SOLID, 6"	GM	1		$0.00
0711 15202	THERMOPLASTIC, STANDARD-OPEN GRADED ASPHALT SURFACES YELLOW, SOLID, 8"	GM	1		$0.00
0711 15231	THERMOPLASTIC, STANDARD-OPEN GRADED ASPHALT SURFACES, YELLOW, SKIP, 6"	GM	1		$0.00
0711 16101	THERMOPLASTIC, STANDARD-OTHER SURFACES, WHITE, SOLID, 6"	GM	3		$0.00
0711 16102	THERMOPLASTIC, STANDARD-OTHER SURFACES, WHITE, SOLID, 8"	GM	1		$0.00
0711 16131	THERMOPLASTIC, OTHER SURFACES, WHITE, SKIP, 6",10-30 SKIP OR 3-9 LANE DROP	GM	1		$0.00
0711 16133	THERMOPLASTIC, STANDARD-OTHER SURFACES WHITE, SKIP, 12"- APPROACH TO TOLL PLAZA OR 3-9 LANE DROP	GM	1		$0.00
0711 16201	THERMOPLASTIC, STANDARD-OTHER SURFACES, YELLOW, SOLID, 6"	GM	3		$0.00
0711 16202	THERMOPLASTIC, STANDARD-OTHER SURFACES, YELLOW, SOLID, 8"	GM	1		$0.00
0711 16231	THERMOPLASTIC, STANDARD-OTHER SURFACES, YELLOW, SKIP, 6"	GM	1		$0.00
0711 17	THERMOPLASTIC, REMOVE EXISTING THERMOPLASTIC PAVEMENT MARKINGS: NON-CONFLICTING ONLY	SF	500		$0.00
0711 12131	THERMOPLASTIC, REFURBISHMENT, WHITE, SKIP, 6"	GM	1		$0.00
0711 12160	THERMOPLASTIC, REFURBISH, WHITE, MESSAGE	EA	5		$0.00
0711 12170	THERMOPLASTIC, REFURBISH, WHITE, ARROWS	EA	5		$0.00
0711 12231	THERMOPLASTIC, REFURBISHMENT, YELLOW, SKIP, 6"	GM	1		$0.00
713103101	PERMANENT TAPE, WHITE, SOLID, 6" FOR CONCRETE BRIDGES	GM	1		$0.00
713103102	PERMANENT TAPE, WHITE, SOLID, 8" EXIT LANE AT INTERCHANGE ON CONCRETE PAVEMENT	GM	1		$0.00
713103103	PERMANENT TAPE, WHITE, SOLID DROP LANE MARKING, 12" FOR CONCRETE BRIDGES,	GM	1		$0.00
713103131	PERMANENT TAPE, WHITE, SKIP/DOTTED, 6" FOR CONCRETE SURFACES	GM	1		$0.00
713103133	PERMANENT TAPE, WHITE, SKIP, 12" WIDE 3'-9' DROP LANE ON CONCRETE SURFACES	GM	1		$0.00
713103201	PERMANENT TAPE, YELLOW, SOLID, 6" FOR CONCRETE BRIDGES	GM	1		$0.00
713103231	PERMANENT TAPE, YELLOW, 10-30 SKIP/ 3-9 DOTTED, 6" FOR CONCRETE SURFACES	GM	1		$0.00
713103331	PERMANENT TAPE, BLACK, SKIP/DOTTED, 6" FOR CONCRETE SURFACES	GM	1		$0.00
713103333	PERMANENT TAPE, BLACK, 3'-9' DROP LANE, 12" ON CONCRETE SURFACES	GM	1		$0.00
713107	PREFORMED/PERMANENT TAPE, REMOVE	SF	50		$0.00

400143	CLEANING & COATING CONCRETE SURFACE, CLASS 5	SF	5		$0.00
906-173-7	SINGLE COMPONENT POLYURETHANE INJECTION	GAL	500		$0.00
906-173-8	TWO COMPONENT POLYURETHANE INJECTION	LB	10000		$0.00
MISCELLANEOUS LABOR, EQUIPMENT, MATERIAL, AND SUB-CONTRACTOR ITEMS					
	LABOR - FOREMAN	HR	1		$0.00
	LABOR - OPERATOR	HR	1		$0.00
	LABOR - TRUCK DRIVER	HR	1		$0.00
	LABOR - PIPE LAYERS (FOR PIPES < 48" DIA.)	HR	1		$0.00
	LABOR - LABORER	HR	1		$0.00
	EQUIPMENT - FOREMAN P/U WITH HAND TOOLS	HR	1		$0.00
	EQUIPMENT - JOB TRUCK WITH MANDATORY TOOLS*	HR	1		$0.00
	EQUIPMENT - CRANE (20 TON)	HR	1		$0.00
	EQUIPMENT - CRANE (60 TON)	HR	1		$0.00
	EQUIPMENT - TRACTOR & TRAILER (TRANSPORT)	HR	1		$0.00
	EQUIPMENT - TRACK HOE (TO 100 HP)	HR	1		$0.00
	EQUIPMENT - TRACK HOE (101 HP TO 170 HP)	HR	1		$0.00
	EQUIPMENT - RUBBER TIRED BACKHOE	HR	1		$0.00
	EQUIPMENT - WHEEL LOADER (TO 150 HP)	HR	1		$0.00
	EQUIPMENT - WHEEL LOADER (151 HP AND UP)	HR	1		$0.00
	EQUIPMENT - TRACK TYPE TRACTORS (TO 100 HP)	HR	1		$0.00
	EQUIPMENT - TRACK TYPE TRACTORS (101 HP AND UP)	HR	1		$0.00
	EQUIPMENT - DUMP TRUCK (TANDEM AXLE)	HR	1		$0.00
	EQUIPMENT - PLATE TAMP	HR	1		$0.00
	EQUIPMENT - 3" TRASH PUMP	HR	1		$0.00
	EQUIPMENT - 4" DOUBLE DIAPHRAGM PUMP	HR	1		$0.00
	EQUIPMENT - AIR COMPRESSOR (125 SCFM)	HR	1		$0.00
	EQUIPMENT - WELL POINT PUMP	HR	1		$0.00
	EQUIPMENT - 4" JET PUMP	HR	1		$0.00
	MATERIAL - 2500 PSI CONCRETE (UN-FORMED)	CY	1		$0.00
	MATERIAL - OFF SITE SELECT FILL	CY	1		$0.00
	MATERIAL - LIMEROCK BASE MATERIAL	TN	1		$0.00
	MATERIAL - #57 WASHED STONE	TN	1		$0.00
	MATERIAL - ASPHALT PAVING (1.5" THICK; TYPE S-3)	SY	1		$0.00
	MATERIAL - BAHIA SOD	SY	1		$0.00
	SUB-CONTRACTOR - WELDER WITH TRUCK	HR	1		$0.00
	SUB-CONTRACTOR - TRACTOR WITH 7' BUSH HOG	HR	1		$0.00

* Contractor Job Truck Mandatory Tools

	Tool	Minimum size	Quantity
1	Air compressor	20 CFM @ 90PSI	1
2	3/4" drive ratchet and socket set		1
3	1 inch drive air impact wrench		1
4	1 inch drive sockets	1-1/2" to 3"	1 each
5	Slug wrenches	1-1/2" to 3"	1
6	End wrenches	7/16" to 1-1/2"	2 each
7	Porta band saw w spare blades	4" opening	1
8	Sawzall w spare blades		1
9	Nylon slings 5,000 and 10,000 pound rated (vertical)	2" 2 ply/4" 2 ply	2 each
10	Grade 80 Chain 10,000 pound rated	1/2" X 10 ft	2
11	Clevis or Shackles 5 ton rated	5/8" alloy	4
12	Porta power 10 ton		1
13	Shovels- round and square point		3 each
14	Cutting torch set *see note*		1
15	Gas or diesel stick welder and accessories *see note*		1
16	Small diaphragm pump and accessories	2" suction	1
17	Tap and die set	1/2" to 2" NPT	1
18	Drill and bits for steel or ductile	1/2" to 2" NPT size	1 set
19	Pry bar	5 foot	1
20	Come along	2ton	2
21	Circular Saw and blades for cribbing/forms	7 1/2 inch	2
22	Generator 120/240 volt	3500 watt	1
23	Framing hammer and nails for forms		2
24	Screw gun and screws for forms and cribbing		1
25	Gas powered cutoff saw (K-12)	12inch	1
26	Chain saw for cribbing and for'ms	14 inch bar	1
27	Sledge hammers	4t/ and 6tl	1 each
28	Crew PPE to include Hard hat and gloves at minimum	as needed	per person

155 Corey Avenue
St. Pete Beach, FL 33706-1839
www.stpetebeach.org

ADDENDUM 1

Civil On Call Construction Services

Issued 3/23/2026

*Sealed bids must be received by **9:00 AM on 04/08/2026** electronically via Bonfire. Bids received after the deadline will not be accepted. They will be publicly opened and read at **11:00 AM on 04/08/2026**. All bidders are invited to attend this bid Opening.*

Addendum 1 includes:

Pre-bid Minutes
Questions and Answers

Optional - Pre-Bid Meeting Minutes
RFP: Civil On Call Construction Services
March 18, 2026
10:00 AM

Staff Members Present:
Sara Spain, Procurement Manager
John Taylor, Assistant Finance Director
Camden Mills, Public Services Director
Dejan Milosevic, Project Manager
Michael Weaver, Infrastructure Operations Manager
Brian Gelock, Public Services
Kenneth Kosbab, Public Services
Ariana Wilson-Romo, Exec. Assistant City Clerk's Office

Others Present:

Name	***Company***	***Contact***
Abbey Boyle	PCS Civil	abbeyb@pcscivilinc.com
Bruno Sequeira	BCS Construction Group	Did not provide.
George Pappas	Southern Road & Bridge LLC	gpappas@southernrb.com
Tristan Hine	PCS Civil	tristanh@pcscivilinc.com
Dave Reid	Ajax Paving Industries of FL LLC	flestimate@ajaxpaving.com
Zachariah Wachalec	David Nelson Construction Co.	zwachalec@nelson-consturction.com

The meeting was called to order at 10:02 AM.

All attendees were present via Teams.

Ms. Spain briefly reviewed important dates and times which are as follows:
- Receipt of questions due 3/25 at 10AM
- Bids due 4/8 by 9AM
- Bid opening 4/8 at 11AM

She requested that any questions be submitted in writing to purchasing@stpetebeach.org. Questions will be answered via an addendum that will be posted to the City website and Bonfire.

Public Services Director Camden Mills stated that the City is seeking as-needed construction services for various capital projects and/or maintenance projects. Ms. Spain clarified that the City does anticipate awarding multiple vendors.

The following questions were asked:
Q: Contract terms? A: 3yr with options for two one-year renewals.
Q: Size project monetary-wise? A: The scope touches on what the dollar amounts would be. This contract would be used for anything under $4M. An addendum with anticipated projects can be posted.

There were questions regarding how contractors are selected if unit line items were being submitted in advance. Mr. Mills and Ms. Spain will clarify the contract language via an addendum. Ms. Spain added that in the general contract terms, it states that submissions will be evaluated on capability, cost, and capacity to perform the specific line items requested.
There being no additional questions, the meeting was adjourned at 10:16 AM.

Questions and Answers:

1. **Are there any plans available for the potential work needed? Or would you like us to provide the price for each line item on the bid form? – Plans are not yet available for the potential work needed. Please provide the unit price for each line item on the bid form that you're capable of performing or subcontracting.**
2. **On the bid form for the On-Call Civil Construction Services list, pay items 285701 through 285715, Optional Base Group 1 through Optional Base Group 15, are listed, but it does not specify which base option will be required. What base options are needed for each base group? – Base Groups 1-11: Graded aggregate based or crushed concrete, consisting of granitic material (minimum LBR 100). Base groups 12-15: Type B-12.5.**
3. **Prebid question: Contract Terms? 3 year with options for 2 one-year renewals.**
4. **Prebid question: Size project monetary-wise? The scope touches on what the dollar amounts would be. This contract would be used for anything under $4M.**
5. **Prebid question: List of anticipated projects. See list below of anticipated projects. This list is not all inclusive of potential projects, other projects may be assigned as needed.**
    - **Citywide stormwater collection system repairs and replacements (estimated > $1,000,000)**
    - **Citywide traffic signage replacements (estimated <$250,000)**
    - **Citywide pavement markings (estimated <$250,000)**
    - **Public Services operations yard expansion (estimated >$250,000 and <$500,000)**
    - **Coquina Way cul-de-sac improvements (<$250,000)**
    - **Fisherman's park hurricane damage rehabilitation (estimated >$250,000 and <$500,000)**
    - **Sunset park hurricane damage rehabilitation (estimated >$250,000 and <$500,000)**
    - **Gulf Way roadway rehabilitation (estimated > $2,000,000)**
    - **Belle Vista mini park improvements (estimated <$250,000)**
    - **1st Ave fishing pier hurricane damage repair (estimated <$250,000)**
    - **7th Ave fishing dock hurricane damage repair (estimated <$250,000)**
6. **Prebid question: There were questions regarding how contractors are selected if unit line items were being submitted in advance. Ms. Spain added that in the general contract terms, it states that submissions will be evaluated on capability, cost, and capacity to perform the specific line items requested. – Refer to II. Statement of Work, Part I: General Requirements, G. Work Assignments.**
7. **Will we split up projects (e.g. Seawalls and Parks)? – Multiple vendors may be selected per project depending on scope of work and vendors capabilities. Vendors are encouraged to submit unit prices for line items that they can perform or subcontract.**

155 Corey Avenue
St. Pete Beach, FL 33706-1839
www.stpetebeach.org

ADDENDUM 2

Civil On Call Construction Services

Issued 3/27/2026

*Sealed bids must be received by **9:00 AM on 04/08/2026** electronically via Bonfire. Bids received after the deadline will not be accepted. They will be publicly opened and read at **11:00 AM on 04/08/2026**. All bidders are invited to attend this bid Opening.*

Addendum 1 includes:

Questions and Answers

Questions and Answers:

1. **What class should the Round and Other-Elip/Arch pipe culvert be, class 3 or 4?** **The Round and Other-Elip/Arch pipe culvert bid items are listed as optional material pipe culverts and are not intended to specify a particular pipe class (e.g., Class III or Class IV) at the bid stage. The required pipe material and structural class, if applicable, will be determined by the City for each specific task order based on the project design, loading conditions, and applicable Florida Department of Transportation Standard Specifications.**

2. **Do the U-End walls need to be precast or cast in place?** **U-end walls may be precast or cast-in-place, as appropriate for the specific task order. The required type will be identified in the plans or directed by the City/Engineer for each assignment.**

3. **Are any inlets planned to be cast in place?** **Inlets may be precast or cast-in-place depending on site conditions and design requirements. This will be defined on a task order basis.**

4. **Will any of the end walls listed on the bid form have runs of pipe passing through them? If so, how many runs and at what skew?** **Some end walls may include pipe penetrations; however, the number of runs, pipe sizes, and skew angles (if any) will be determined by the design for each individual task order and shown in the applicable plans.**

5. **Please clarify how contract work will be assigned. The Statement of Work, Part I, Section 1, item G (Work Assignments) states that the City will obtain quotes from the Contractors who have a multiple-award contract. The City will already have contract pricing for each Contractor in the multiple-award contract, what is the criteria for these quotes?** **In the general contract terms, it states that submissions will be evaluated on capability, cost, and capacity to perform the specific line items requested.**

6. **Statement of Work, Part I, Section 15 states that Contractors must provide references for 5 work types in item E. If the Contractor does not intend to submit pricing for a work type, must that work type still be included in the project references?** **No, bidders shall provide references for applicable work types.**

7. **Please clarify the Period of Performance in the General Contract Terms. This states base scope target completion of January 2027 while other parts of the RFP specify a three year contract.** **3-year contract with 2 options for 1-year extensions. Ongoing work may be required.**

8. **Will any bonding be required?** **Yes, 5% of total bid amount.**

EXHIBIT "C"

Vendor Bid/Proposal

(Place Vendor's Bid/Proposal Behind this Page)

PCS CIVIL
"Committed to Excellence"

6920 Asphalt Avenue ▪ Tampa, FL 33614
Phone: (813) 868-7719 ▪ www.pcscivilinc.com

PROPOSAL

CITY OF ST. PETE BEACH
155 COREY AVENUE
ST. PETE BEACH, FL 33706

Project: Civil On Call Construction Services

Bidder: PCS Civil, LLC

9:00 a.m., Wednesday, April 8, 2026

Bid Form for City of St Pete Beach
On-Call Civil Construction Services
Request for Proposal

Specifications for the numbered pay items can be found in the current FDOT "Standard Specifications for Road and Bridge Construction".
Bid quantities are for comparison purposes only. This contract consists of various projects which are not yet defined and no quantities are guaranteed.

Pay Item No.	Item Description	Units	Est. Quantity	Unit Price	Amount
0101 1 (2501-5000)	MOBILIZATION (PER WORK ASSIGNMENT/LOCATION) - $2,501 TO $5,000	LS	1	$1000.00	$1000.00
0101 1 (5501-25000)	MOBILIZATION (PER WORK ASSIGNMENT/LOCATION) - $5,001 TO $25,000	LS	1	$2500.00	$2500.00
0101 1 (25001-50000)	MOBILIZATION (PER WORK ASSIGNMENT/LOCATION) - $25,001 TO $50,000	LS	1	$5000.00	$5000.00
0101 1 (50001-150000)	MOBILIZATION (PER WORK ASSIGNMENT/LOCATION) - $50,001 TO $150,000	LS	1	$15000.00	$15000.00
0101 1 (150001-250000)	MOBILIZATION (PER WORK ASSIGNMENT/LOCATION) - $150,001 TO $250,000	LS	1	$25000.00	$25000.00
0101 1 (250001-350000)	MOBILIZATION (PER WORK ASSIGNMENT/LOCATION) - $250,001 TO $350,000	LS	1	$35000.00	$35000.00
0101 1 (350001-500000)	MOBILIZATION (PER WORK ASSIGNMENT/LOCATION) - $350,001 to $500,000	LS	1	$50000.00	$50000.00
0101 1 (500001+)	MOBILIZATION (PER WORK ASSIGNMENT/LOCATION) - $500,001 or more	LS	1	$200000.00	$200000.00
0101 1 (2501-5000)	EMERGENCY MOBILIZATION (PER WORK ASSIGNMENT/LOCATION) - $2,501 TO $5,000	LS	1	$1000.00	$1000.00
0101 1 (5501-25000)	EMERGENCY MOBILIZATION (PER WORK ASSIGNMENT/LOCATION) - $5,001 TO $25,000	LS	1	$2500.00	$2500.00
0101 1 (25001-50000)	EMERGENCY MOBILIZATION (PER WORK ASSIGNMENT/LOCATION) - $25,001 TO $50,000	LS	1	$5000.00	$5000.00
0101 1 (50001-150000)	EMERGENCY MOBILIZATION (PER WORK ASSIGNMENT/LOCATION) - $50,001 TO $150,000	LS	1	$15000.00	$15000.00
0101 1 (150001-250000)	EMERGENCY MOBILIZATION (PER WORK ASSIGNMENT/LOCATION) - $150,001 TO $250,000	LS	1	$25000.00	$25000.00
0102 1	MAINTENANCE OF TRAFFIC	Lump Sum (LS) cost to be assigned for each Task Order and shall not exceed 10% of the proposed construction cost.			
0102 3	COMMERCIAL MATERIAL FOR TEMPORARY DRIVEWAY MAINTENANCE	CY	50	$145.00	$7250.00
0102 14	TRAFFIC CONTROL OFFICER	HR	500	$115.00	$57500.00
0102 60	WORK ZONE SIGN	ED	6000	$0.65	$3900.00
0102 61	BUSINESS SIGN	EA	5	$500.00	$2500.00
0102 71 11	BARRIER WALL, TEMPORARY, F&I, CONCRETE	LF	200	$55.00	$11000.00
0102 71 13	BARRIER WALL, TEMPORARY, F&I, LOW PROFILE, CONCRETE	LF	200	$65.00	$13000.00
0102 71 14	BARRIER WALL, TEMPORARY, F&I, TYPE K	LF	200	$60.00	$12000.00
0102 71 21	BARRIER WALL, TEMPORARY, RELOCATE, CONCRETE	LF	200	$25.00	$5000.00
0102 71 23	BARRIER WALL, TEMPORARY, RELOCATE, LOW PROFILE, CONCRETE	LF	200	$25.00	$5000.00
0102 71 24	BARRIER WALL, TEMPORARY, RELOCATE, TYPE K	LF	200	$25.00	$5000.00

0102 73	TEMPORARY GUARDRAIL	LF	20	$50.00	$1000.00
0102 74 1	CHANNELIZING DEVICE- TYPES I, II, DI, VP, DRUM, OR LCD	ED	15000	$0.30	$4500.00
0102 74 2	CHANNELIZING DEVICE, TYPE III, 6'	ED	1000	$0.70	$700.00
0102 74 7	CHANNELIZING DEVICE- PEDESTRIAN LCD (LONGITUDINAL CHANNELIZING DEVICE)	LF	1000	$12.00	$12000.00
0102 75 1	TEMPORARY SEPARATOR, F&I REMOVE	LF	500	$20.00	$10000.00
0102 75 2	TEMPORARY SEPARATOR, F&I REMAIN	LF	500	$15.00	$7500.00
0102 75 3	TEMPORARY SEPARATOR, INSTALL	LF	500	$10.00	$5000.00
0102 75 4	TEMPORARY SEPARATOR, RELOCATE	LF	500	$10.00	$5000.00
0102 75 5	TEMPORARY SEPARATOR, REMOVE	LF	500	$10.00	$5000.00
0102 76	ARROW BOARD / ADVANCE WARNING ARROW PANEL	ED	250	$20.00	$5000.00
0102 78	TEMPORARY RETROREFLECTIVE PAVEMENT MARKER	EA	50	$20.00	$1000.00
0102 89 1	TEMPORARY CRASH CUSHION, REDIRECTIVE OPTION	LO	5	$1500.00	$7500.00
0102 99	PORTABLE CHANGEABLE MESSAGE SIGN, TEMPORARY	ED	600	$25.00	$15000.00
0102 104	TEMPORARY SIGNALIZATION AND MAINTENANCE, INTERSECTION	ED	100	$35.00	$3500.00
0102 107 1	TEMPORARY TRAFFIC DETECTION AND MAINTENANCE, INTERSECTION	ED	100	$20.00	$2000.00
0102 150 1	PORTABLE REGULATORY SIGN	ED	50	$20.00	$1000.00
0102 150 2	RADAR SPEED DISPLAY UNIT	ED	50	$20.00	$1000.00
0102 911 1	PAVEMENT MARKING REMOVABLE TAPE, WHITE OR BLACK, SKIP	LF	500	$6.25	$3125.00
0102 911 2	PAVEMENT MARKING REMOVABLE TAPE, WHITE, BLACK, SOLID	LF	500	$8.75	$4375.00
0102 911 3	PAVEMENT MARKING REMOVABLE TAPE, WHITE OR BLACK, OTHER	SF	25	$6.25	$156.25
0102 912 1	PAVT MARKING REMOVABLE TAPE, YELLOW, SKIP	LF	500	$6.25	$3125.00
0102 912 2	PAVEMENT MARKING REMOVABLE TAPE, YELLOW, SOLID	LF	500	$9.25	$4625.00
0102 912 3	PAVEMENT MARKING REMOVABLE TAPE, YELLOW, OTHER	SF	25	$6.25	$156.25
0104 1	ARTIFICIAL COVERINGS /ROLLED EROSION CONTROL PRODUCTS	SY	150	$4.00	$600.00
0104 10 3	SEDIMENT BARRIER	LF	5000	$7.00	$35000.00
0104 11	FLOATING TURBIDITY BARRIER	LF	100	$18.50	$1850.00
0104 12	STAKED TURBIDITY BARRIER- NYLON REINFORCED PVC	LF	100	$6.00	$600.00
0104 13 1	STAKED SILT FENCE, TYPE III	LF	500	$7.00	$3500.00
0104 13 2	STAKED SILT FENCE, TYPE IV	LF	500	$9.00	$4500.00

0104 18	INLET PROTECTION SYSTEM	EA	100	$225.00	$22500.00
0107 1	LITTER REMOVAL	AC	10	$650.00	$6500.00
0107 2	MOWING	AC	10	$650.00	$6500.00
0110 2 1	CLEARING & GRUBBING	AC	10	$10,000.00	$100000.00
0110 3	REMOVAL OF EXISTING STRUCTURES/BRIDGES	SF	20	$425.00	$8500.00
0110 4 10	REMOVAL OF EXISTING CONCRETE	SY	2000	$30.00	$60000.00
0110 7 1	MAILBOX, F&I SINGLE	EA	5	$300.00	$1500.00
0120 1	REGULAR EXCAVATION	CY	3000	$45.00	$135000.00
0120 3	LATERAL DITCH EXCAVATION	CY	100	$45.00	$4500.00
0120 4	SUBSOIL EXCAVATION	CY	100	$60.00	$6000.00
0120 5	CHANNEL EXCAVATION	CY	100	$45.00	$4500.00
0120 6	EMBANKMENT	CY	500	$30.00	$15000.00
0121 70	FLOWABLE FILL	CY	50	$375.00	$18750.00
0125 1	EXCAVATION FOR STRUCTURES	CY	25	$45.00	$1125.00
0145 1	GEOSYNTHETIC REINFORCED SOIL SLOPE	SF	25	$5.00	$125.00
0160 4	TYPE B STABILIZATION	SY	7000	$35.00	$245000.00
0162 1 11	PREPARED SOIL LAYER-6" DEPTH	SY	50	$30.00	$1500.00
0162 1 12	PREPARED SOIL LAYER, FINISH SOIL LAYER, 12"	SY	50	$45.00	$2250.00
0162 1 21	PREPARED SOIL LAYER, ORGANIC SOIL LAYER, 6"	SY	50	$50.00	$2500.00
285701	OPTIONAL BASE, BASE GROUP 01	SY	100	$30.00	$3000.00
285702	OPTIONAL BASE, BASE GROUP 02	SY	100	$35.00	$3500.00
285703	OPTIONAL BASE, BASE GROUP 03	SY	100	$40.00	$4000.00
285704	OPTIONAL BASE, BASE GROUP 04	SY	1000	$45.00	$45000.00
285705	OPTIONAL BASE, BASE GROUP 05	SY	100	$50.00	$5000.00
285706	OPTIONAL BASE, BASE GROUP 06	SY	1000	$55.00	$55000.00
285707	OPTIONAL BASE, BASE GROUP 07	SY	100	$60.00	$6000.00
285708	OPTIONAL BASE, BASE GROUP 08	SY	1000	$75.00	$75000.00
285709	OPTIONAL BASE, BASE GROUP 09	SY	100	$85.00	$8500.00
285710	OPTIONAL BASE GROUP 10	SY	100	$85.00	$8500.00

285711	OPTIONAL BASE, BASE GROUP 11	SY	100	$95.00	$9500.00
285712	OPTIONAL BASE, BASE GROUP 12	SY	100	$95.00	$9500.00
285713	OPTIONAL BASE, BASE GROUP 13	SY	100	$100.00	$10000.00
285714	OPTIONAL BASE, BASE GROUP 14	SY	100	$100.00	$10000.00
285715	OPTIONAL BASE, BASE GROUP 15	SY	100	$125.00	$12500.00
0327 70 1	MILLING EXIST ASPH PAVT, 1" AVG DEPTH	SY	1000	$40.00	$40000.00
0327 70 2	MILLING EXIST ASPH PAVT, 3 1/2" AVG DEPTH	SY	200	$40.00	$8000.00
0327 70 3	MILLING EXIST ASPH PAVT, 4 1/2" AVG DEPTH	SY	200	$40.00	$8000.00
0327 70 4	MILLING EXIST ASPH PAVT, 3" AVG DEPTH	SY	200	$40.00	$8000.00
0327 70 5	MILLING EXIST ASPH PAVT, 2" AVG DEPTH	SY	200	$40.00	$8000.00
0327 70 6	MILLING EXIST ASPH PAVT, 1 1/2" AVG DEPTH	SY	5000	$40.00	$200000.00
0327 70 7	MILLING EXIST ASPH PAVT, 4" AVG DEPTH	SY	200	$40.00	$8000.00
0327 70 8	MILLING EXIST ASPH PAVT, 2 1/2" AVG DEPTH	SY	200	$40.00	$8000.00
0327 70 11	MILLING EXIST ASPH PAVT, 2 1/4" AVG DEPTH	SY	200	$40.00	$8000.00
0327 70 12	MILLING EXIST ASPH PAVT, 1 1/4" AVG DEPTH	SY	200	$40.00	$8000.00
0327 70 13	MILLING EXIST ASPH PAVT, 1 3/4" AVG DEPTH	SY	200	$40.00	$8000.00
0327 70 15	MILLING EXIST ASPH PAVT, 2 3/4" AVG DEPTH	SY	200	$40.00	$8000.00
0327 70 16	MILLING EXIST ASPH PAVT, 1/2" AVG DEPTH	SY	200	$40.00	$8000.00
0327 70 17	MILLING EXIST ASPH PAVT, 3 1/4" AVG DEPTH	SY	200	$40.00	$8000.00
0327 70 19	MILLING EXIST ASPH PAVT, 3/4" AVG DEPTH	SY	200	$40.00	$8000.00
0327 70 20	MILLING EXIST ASPH PAVT, 3 3/4" AVG DEPTH	SY	200	$40.00	$8000.00
0334 1 12 (1-99)	SUPERPAVE ASPHALTIC CONC, TRAFFIC B, 1-99 TONS	TN	50	$175.00	$8750.00
0334 1 12 (100-199)	SUPERPAVE ASPHALTIC CONC, TRAFFIC B, 100 - 199 TONS	TN	150	$175.00	$26250.00
0334 1 12 (200-300)	SUPERPAVE ASPHALTIC CONC, TRAFFIC B, 200 - 300 TONS	TN	250	$175.00	$43750.00
0334 1 12 (300+)	SUPERPAVE ASPHALTIC CONC, TRAFFIC B, 300 TONS OR MORE	TN	350	$175.00	$61250.00
0334 1 13 (1-99)	SUPERPAVE ASPHALTIC CONC, TRAFFIC C 1 - 99 TONS	TN	50	$275.00	$13750.00
0334 1 13 (100-199)	SUPERPAVE ASPHALTIC CONC, TRAFFIC C 100 - 199 TONS	TN	150	$250.00	$37500.00
0334 1 13 (200-300)	SUPERPAVE ASPHALTIC CONC, TRAFFIC C 200 -300 TONS	TN	250	$225.00	$56250.00
0334 1 13 (300+)	SUPERPAVE ASPHALTIC CONC, TRAFFIC C 300 TONS OR MORE	TN	350	$175.00	$61250.00

0334 1 52 (0-99)	SUPERPAVE ASPHALTIC CONCRETE, TRAFFIC B, PG76-22 0-99 TONS	TN	50	$175.00	$8750.00
0334 1 52 (100-199)	SUPERPAVE ASPHALTIC CONCRETE, TRAFFIC B, PG76-22 100-199 TONS	TN	150	$175.00	$26250.00
0334 1 52 (200-300)	SUPERPAVE ASPHALTIC CONCRETE, TRAFFIC B, PG76-22 200-300 TONS	TN	250	$175.00	$43750.00
0334 1 52 (300+)	SUPERPAVE ASPHALTIC CONCRETE, TRAFFIC B, PG76-22 300 TONS OR MORE	TN	350	$175.00	$61250.00
0334 1 53 (0-99)	SUPERPAVE ASPHALTIC CONCRETE, TRAFFIC C, PG76-22 0-99 TONS	TN	50	$300.00	$15000.00
0334 1 53 (100-199)	SUPERPAVE ASPHALTIC CONCRETE, TRAFFIC C, PG76-22 100-199 TONS	TN	150	$250.00	$37500.00
0334 1 53 (200-300)	SUPERPAVE ASPHALTIC CONCRETE, TRAFFIC C, PG76-22 200-300 TONS	TN	250	$250.00	$62500.00
0334 1 53 (300+)	SUPERPAVE ASPHALTIC CONCRETE, TRAFFIC C, PG76-22 300 TONS OR MORE	TN	350	$250.00	$87500.00
0334 1 54 (0-99)	SUPERPAVE ASPHALTIC CONCRETE, TRAFFIC D, PG76-22 0-99 TONS	TN	50	$300.00	$15000.00
0334 1 54 (100-199)	SUPERPAVE ASPHALTIC CONCRETE, TRAFFIC D, PG76-22 100-199 TONS	TN	150	$250.00	$37500.00
0334 1 54 (200-300)	SUPERPAVE ASPHALTIC CONCRETE, TRAFFIC D, PG76-22 200-300 TONS	TN	250	$250.00	$62500.00
0334 1 54 (300+)	SUPERPAVE ASPHALTIC CONCRETE, TRAFFIC D, PG76-22 300 TONS OR MORE	TN	350	$250.00	$87500.00
0334 1 56 (1-99)	SUPERPAVE ASPHALTIC CONCRETE, TRAFFIC B, HIGH POLYMER 0-99 TONS	TN	50	$175.00	$8750.00
0334 1 56 (100-199)	SUPERPAVE ASPHALTIC CONCRETE, TRAFFIC B, HIGH POLYMER 100-199 TONS	TN	150	$175.00	$26250.00
0334 1 56 (200-300)	SUPERPAVE ASPHALTIC CONCRETE, TRAFFIC B, HIGH POLYMER 200-300 TONS	TN	250	$175.00	$43750.00
0334 1 56 (300+)	SUPERPAVE ASPHALTIC CONCRETE, TRAFFIC B, HIGH POLYMER 300 TONS OR MORE	TN	350	$175.00	$61250.00
0334 1 57 (0-99)	SUPERPAVE ASPHALTIC CONCRETE, TRAFFIC C, HIGH POLYMER 0-99 TONS	TN	50	$175.00	$8750.00
0334 1 57 (100-199)	SUPERPAVE ASPHALTIC CONCRETE, TRAFFIC C, HIGH POLYMER 100-199 TONS	TN	150	$175.00	$26250.00
0334 1 57 (200-300)	SUPERPAVE ASPHALTIC CONCRETE, TRAFFIC C, HIGH POLYMER 200-300 TONS	TN	250	$175.00	$43750.00
0334 1 57 (300+)	SUPERPAVE ASPHALTIC CONCRETE, TRAFFIC C, HIGH POLYMER 300 TONS OR MORE	TN	350	$175.00	$61250.00
0334 1 58 (0-99)	SUPERPAVE ASPHALTIC CONCRETE, TRAFFIC D, HIGH POLYMER 0-99 TONS	TN	50	$175.00	$8750.00
0334 1 58 (100-199)	SUPERPAVE ASPHALTIC CONCRETE, TRAFFIC D, HIGH POLYMER 100-199 TONS	TN	150	$175.00	$26250.00
0334 1 58 (200-300)	SUPERPAVE ASPHALTIC CONCRETE, TRAFFIC D, HIGH POLYMER 200-300 TONS	TN	250	$175.00	$43750.00
0334 1 58 (300+)	SUPERPAVE ASPHALTIC CONCRETE, TRAFFIC D, HIGH POLYMER 300 TONS OR MORE	TN	350	$175.00	$61250.00
0337 7 80 (0-99)	ASPHALT CONCRETE FRICTION COURSE,TRAFFIC B, FC-9.5, PG 76-22 0-99 TONS	TN	50	$175.00	$8750.00
0337 7 80 (100-199)	ASPHALT CONCRETE FRICTION COURSE,TRAFFIC B, FC-9.5, PG 76-22 100-199 TONS	TN	150	$175.00	$26250.00
0337 7 80 (200-300)	ASPHALT CONCRETE FRICTION COURSE,TRAFFIC B, FC-9.5, PG 76-22 200-300 TONS	TN	250	$175.00	$43750.00
0337 7 80 (300+)	ASPHALT CONCRETE FRICTION COURSE,TRAFFIC B, FC-9.5, PG 76-22 300 TONS OR MORE	TN	350	$175.00	$61250.00
0337 7 81 (0-99)	ASPHALT CONCRETE FRICTION COURSE,TRAFFIC B, FC-12.5, PG 76-22 0-99 TONS	TN	50	$175.00	$8750.00

0337 7 81 (100-199)	ASPHALT CONCRETE FRICTION COURSE,TRAFFIC B, FC-12.5, PG 76-22 100-199 TONS	TN	150	$175.00	$26250.00
0337 7 81 (200-300)	ASPHALT CONCRETE FRICTION COURSE,TRAFFIC B, FC-12.5, PG 76-22 200-300 TONS	TN	250	$175.00	$43750.00
0337 7 81 (300+)	ASPHALT CONCRETE FRICTION COURSE,TRAFFIC B, FC-12.5, PG 76-22 300 TONS OR MORE	TN	350	$175.00	$61250.00
0337 7 82 (0-99)	ASPHALT CONCRETE FRICTION COURSE,TRAFFIC C, FC-9.5, PG 76-22 0-99 TONS	TN	50	$350.00	$17500.00
0337 7 82 (100-199)	ASPHALT CONCRETE FRICTION COURSE,TRAFFIC C, FC-9.5, PG 76-22 100-199 TONS	TN	150	$325.00	$48750.00
0337 7 82 (200-300)	ASPHALT CONCRETE FRICTION COURSE,TRAFFIC C, FC-9.5, PG 76-22 200-300 TONS	TN	250	$275.00	$68750.00
0337 7 82 (300+)	ASPHALT CONCRETE FRICTION COURSE,TRAFFIC C, FC-9.5, PG 76-22 300 TONS OR MORE	TN	350	$250.00	$87500.00
0337 7 83 (0-99)	ASPHALT CONCRETE FRICTION COURSE,TRAFFIC C, FC-12.5, PG 76-22 0-99 TONS	TN	50	$350.00	$17500.00
0337 7 83 (100-199)	ASPHALT CONCRETE FRICTION COURSE,TRAFFIC C, FC-12.5, PG 76-22 100-199 TONS	TN	150	$325.00	$48750.00
0337 7 83 (200-300)	ASPHALT CONCRETE FRICTION COURSE,TRAFFIC C, FC-12.5, PG 76-22 200-300 TONS	TN	250	$275.00	$68750.00
0337 7 83 (300+)	ASPHALT CONCRETE FRICTION COURSE,TRAFFIC C, FC-12.5, PG 76-22 300 TONS OR MORE	TN	350	$250.00	$87500.00
0337 7 85 (0-99)	ASPHALT CONCRETE FRICTION COURSE,TRAFFIC D, FC-12.5, PG 76-22 0-99 TONS	TN	50	$175.00	$8750.00
0337 7 85 (100-199)	ASPHALT CONCRETE FRICTION COURSE,TRAFFIC D, FC-12.5, PG 76-22 100-199 TONS	TN	150	$175.00	$26250.00
0337 7 85 (200-300)	ASPHALT CONCRETE FRICTION COURSE,TRAFFIC D, FC-12.5, PG 76-22 200-300 TONS	TN	250	$175.00	$43750.00
0337 7 85 (300+)	ASPHALT CONCRETE FRICTION COURSE,TRAFFIC D, FC-12.5, PG 76-22 300 TONS OR MORE	TN	350	$175.00	$61250.00
0337 7 90 (0-99)	ASPHALT CONCRETE FRICTION COURSE,TRAFFIC B, FC-9.5, HIGH POLYMER 0-99 TONS	TN	50	$175.00	$8750.00
0337 7 90 (100-199)	ASPHALT CONCRETE FRICTION COURSE,TRAFFIC B, FC-9.5, HIGH POLYMER 100-199 TONS	TN	150	$175.00	$26250.00
0337 7 90 (200-300)	ASPHALT CONCRETE FRICTION COURSE,TRAFFIC B, FC-9.5, HIGH POLYMER 200-300 TONS	TN	250	$175.00	$43750.00
0337 7 90 (300+)	ASPHALT CONCRETE FRICTION COURSE,TRAFFIC B, FC-9.5, HIGH POLYMER 300 TONS OR MORE	TN	350	$175.00	$61250.00
0337 7 93 (0-99)	ASPHALT CONCRETE FRICTION COURSE,TRAFFIC C, FC-12.5, HIGH POLYMER 0-99 TONS	TN	50	$175.00	$8750.00
0337 7 93 (100-199)	ASPHALT CONCRETE FRICTION COURSE,TRAFFIC C, FC-12.5, HIGH POLYMER 100-199 TONS	TN	150	$175.00	$26250.00
0337 7 93 (200-300)	ASPHALT CONCRETE FRICTION COURSE,TRAFFIC C, FC-12.5, HIGH POLYMER 200-300 TONS	TN	250	$175.00	$43750.00
0337 7 93 (300+)	ASPHALT CONCRETE FRICTION COURSE,TRAFFIC C, FC-12.5, HIGH POLYMER 300 TONS OR MORE	TN	350	$175.00	$61250.00
0337 7 94 (0-99)	ASPHALT CONCRETE FRICTION COURSE,TRAFFIC D, FC-12.5, HIGH POLYMER 0-99 TONS	TN	50	$175.00	$8750.00
0337 7 94 (100-199)	ASPHALT CONCRETE FRICTION COURSE,TRAFFIC D, FC-12.5, HIGH POLYMER 100-199 TONS	TN	150	$175.00	$26250.00
0337 7 94 (200-300)	ASPHALT CONCRETE FRICTION COURSE,TRAFFIC D, FC-12.5, HIGH POLYMER 200-300 TONS	TN	250	$175.00	$43750.00
0337 7 94 (300+)	ASPHALT CONCRETE FRICTION COURSE,TRAFFIC D, FC-12.5, HIGH POLYMER 300 TONS OR MORE	TN	350	$175.00	$61250.00
0339 1	MISCELLANEOUS ASPHALT PAVEMENT	TN	25	$400.00	$10000.00
0350 3 5	PLAIN CEMENT CONCRETE PAVEMENT, 8"	SY	100	$235.00	$23500.00

0350 3 9	PLAIN CEMENT CONCRETE PAVEMENT, 10"	SY	100	$245.00	$24500.00
0350 3 13	PLAIN CEMENT CONCRETE PAVEMENT, 12"	SY	100	$255.00	$25500.00
0350 5	CLEANING & SEALING JOINTS- CONCRETE PAVEMENT:	LF	100	$5.00	$500.00
0350 30 13	CONCRETE PAVEMENT FOR ROUNDABOUT APRON, 12" DEPTH	SY	100	$255.00	$25500.00
0352 70	GRINDING CONCRETE PAVEMENT	SY	100	$20.00	$2000.00
0400 0 11	CONCRETE CLASS NS, GRAVITY WALL	CY	10	$1,800.00	$18000.00
0400 1 2	CONCRETE CLASS I, ENDWALLS	CY	10	$2,850.00	$28500.00
0400 1 11	CONCRETE CLASS I, RETAINING WALLS	CY	10	$2,000.00	$20000.00
0400 2 1	CONCRETE CLASS II, CULVERTS	CY	10	$3,700.00	$37000.00
0400 2 2	CONCRETE CLASS II, ENDWALLS	CY	10	$2,850.00	$28500.00
0400 2 5	CONCRETE CLASS II, BRIDGE SUBSTRUCTURE	CY	10	$4,500.00	$45000.00
0400 2 11	CONCRETE CLASS II, RETAINING WALLS	CY	10	$2,000.00	$20000.00
0400 3 1	CONCRETE CLASS III, CULVERTS	CY	10	$4,250.00	$42500.00
0400 3 8	CONCRETE CLASS III, BULKHEAD	CY	10	$2,500.00	$25000.00
0400 4 1	CONCRETE CLASS IV, CULVERTS	CY	10	$4,500.00	$45000.00
0400 4 2	CONCRETE CLASS IV, ENDWALLS	CY	10	$2,000.00	$20000.00
0400 4 5	CONCRETE CLASS IV, BRIDGE SUBSTRUCTURE	CY	10	$5,500.00	$55000.00
0400 4 11	CONC CLASS IV, RETAINING WALLS	CY	10	$2,500.00	$25000.00
0400 145	CLEANING CONCRETE SURFACE	SF	20	$25.00	$500.00
0401 70 1	RESTORE SPALLED AREAS, EPOXY	CF	10	$200.00	$2000.00
0401 70 4	RESTORE SPALLED AREAS, PORTLAND CEMENT GROUT	CF	10	$180.00	$1800.00
0401 70 5	RESTORE SPALLED AREAS, CONTRACTORS OPTION	CF	10	$180.00	$1800.00
0411 1	EPOXY MATERIAL FOR CRACK INJECTION- STRUCTURES REHAB	GA	10	$380.00	$3800.00
0411 2	CRACKS INJECT & SEAL- STRUCTURES REHAB	LF	25	$200.00	$5000.00
413-149	PENETRANT SEALER	GA	10	$200.00	$2000.00
413-154	CLEANING & SEALING CONCRETE SURFACES- PENETRANT SEALER OR METHACRYLATES	SF	25	$200.00	$5000.00
0415 1 1	REINFORCING STEEL- ROADWAY	LB	100	$2.00	$200.00
0415 1 3	REINFORCING STEEL- RETAINING WALL	LB	100	$2.00	$200.00
0415 1 5	REINFORCING STEEL- BRIDGE SUBSTRUCTURE	LB	100	$2.00	$200.00

0415 1 6	REINFORCING STEEL- MISCELLANEOUS	LB	100	$2.00	$200.00
0415 1 8	REINFORCING STEEL- BULKHEAD	LB	100	$2.00	$200.00
0425 1201	INLETS, CURB, TYPE 9, <10'	EA	3	$9,750.00	$29250.00
0425 1202	INLETS, CURB, TYPE 9, >10'	EA	3	$11,500.00	$34500.00
0425 1203	INLETS, CURB, TYPE 9, J BOT, <10'	EA	3	$9,000.00	$27000.00
0425 1204	INLETS, CURB, TYPE 9, J BOT, >10'	EA	3	$15,225.00	$45675.00
0425 1205	INLETS, CURB, TYPE 9, PARTIAL	EA	3	$4,300.00	$12900.00
0425 1209	INLETS, CURB, TYPE 9, MODIFY	EA	3	$4,000.00	$12000.00
0425 1211	INLETS, CURB, TYPE 10, <10'	EA	3	$10,450.00	$31350.00
0425 1212	INLETS, CURB, TYPE 10, >10'	EA	3	$12,200.00	$36600.00
0425 1213	INLETS, CURB, TYPE 10, J BOT <10'	EA	3	$13,400.00	$40200.00
0425 1214	INLETS, CURB, TYPE 10, J BOT >10'	EA	3	$15,800.00	$47400.00
0425 1215	INLETS, CURB, TYPE 10, PARTIAL	EA	3	$5,000.00	$15000.00
0425 1311	INLETS, CURB, TYPE P-1, <10'	EA	3	$14,450.00	$43350.00
0425 1312	INLETS, CURB TYPE P-1, >10'	EA	3	$16,200.00	$48600.00
0425 1315	INLETS, CURB TYPE P-1, PARTIAL	EA	3	$9,275.00	$27825.00
0425 1319	INLETS, CURB TYPE P-1, MODIFY	EA	3	$4,000.00	$12000.00
0425 1321	INLETS, CURB, TYPE P-2, <10'	EA	3	$15,700.00	$47100.00
0425 1322	INLETS, CURB, TYPE P-2, >10'	EA	3	$17,450.00	$52350.00
0425 1325	INLETS, CURB, TYPE P-2, PARTIAL	EA	3	$9,800.00	$29400.00
0425 1329	INLETS, CURB TYPE P-2, MODIFY	EA	3	$4,000.00	$12000.00
0425 1331	INLETS, CURB, TYPE P-3, <10'	EA	3	$13,050.00	$39150.00
0425 1332	INLETS, CURB. TYPE P-3, >10'	EA	3	$14,675.00	$44025.00
0425 1335	INLETS, CURB, TYPE P-3, PARTIAL	EA	3	$7,825.00	$23475.00
0425 1341	INLETS, CURB, TYPE P-4, <10'	EA	3	$14,775.00	$44325.00
0425 1342	INLETS, CURB, TYPE P-4, >10'	EA	3	$16,400.00	$49200.00
0425 1345	INLETS, CURB, TYPE P-4, PARTIAL	EA	3	$9,475.00	$28425.00
0425 1349	INLETS, CURB, TYPE P-4, MODIFY	EA	3	$4,000.00	$12000.00
0425 1351	INLETS, CURB, TYPE P-5, <10'	EA	3	$11,400.00	$34200.00

0425 1352	INLETS, CURB, TYPE P-5, >10'	EA	3	$13,000.00	$39000.00
0425 1355	INLETS, CURB, TYPE P-5, PARTIAL	EA	3	$6,150.00	$18450.00
0425 1359	INLETS, CURB, TYPE P-5, MODIFY	EA	3	$4,000.00	$12000.00
0425 1361	INLETS, CURB, TYPE P-6, <10'	EA	3	$12,675.00	$38025.00
0425 1362	INLETS, CURB, TYPE P-6, >10'	EA	3	$13,900.00	$41700.00
0425 1365	INLETS, CURB, TYPE P-6, PARTIAL	EA	3	$7,000.00	$21000.00
0425 1369	INLETS, CURB, TYPE P-6, MODIFY	EA	3	$4,000.00	$12000.00
0425 1411	INLETS, CURB TYPE J-1, <10'	EA	3	$16,800.00	$50400.00
0425 1412	INLETS, CURB, TYPE J-1, >10'	EA	3	$19,560.00	$58680.00
0425 1415	INLETS, CURB, TYPE J-1, PARTIAL	EA	3	$8,725.00	$26175.00
0425 1419	INLETS, CURB, TYPE J-1, MODIFY	EA	3	$4,000.00	$12000.00
0425 1421	INLETS, CURB, TYPE J-2, <10'	EA	3	$15,700.00	$47100.00
0425 1422	INLETS, CURB, TYPE J-2, >10'	EA	3	$17,450.00	$52350.00
0425 1425	INLETS, CURB, TYPE J-2, PARTIAL	EA	3	$9,775.00	$29325.00
0425 1429	INLETS, CURB, TYPE J-2, MODIFY	EA	3	$4,000.00	$12000.00
0425 1431	INLETS, CURB, TYPE J-3, <10'	EA	3	$15,325.00	$45975.00
0425 1432	INLETS, CURB, TYPE J-3, >10'	EA	3	$18,200.00	$54600.00
0425 1435	INLETS, CURB, TYPE J-3, PARTIAL	EA	3	$7,825.00	$23475.00
0425 1441	INLETS, CURB, TYPE J-4, <10'	EA	3	$16,450.00	$49350.00
0425 1442	INLETS, CURB, TYPE J-4, >10'	EA	3	$19,325.00	$57975.00
0425 1445	INLETS, CURB, TYPE J-4, PARTIAL	EA	3	$9,500.00	$28500.00
0425 1451	INLETS, CURB, TYPE J-5, <10'	EA	3	$15,900.00	$47700.00
0425 1452	INLETS, CURB, TYPE J-5, >10'	EA	3	$17,075.00	$51225.00
0425 1455	INLETS, CURB, TYPE J-5, PARTIAL	EA	3	$6,125.00	$18375.00
0425 1459	INLETS, CURB, TYPE J-5, MODIFY	EA	3	$4,000.00	$12000.00
0425 1461	INLETS, CURB, TYPE J-6, <10'	EA	3	$16,700.00	$50100.00
0425 1462	INLETS, CURB, TYPE J-6, >10'	EA	3	$17,950.00	$53850.00
0425 1465	INLETS, CURB, TYPE J-6, PARTIAL	EA	3	$7,000.00	$21000.00
0425 1469	INLETS, CURB, TYPE J-6, MODIFY	EA	3	$4,000.00	$12000.00

0425 1471	INLETS, CURB, TYPE 7, <10'	EA	3	$9,750.00	$29250.00
0425 1472	INLETS, CURB, TYPE 7, >10'	EA	3	$11,500.00	$34500.00
0425 1473	INLETS, CURB, TYPE 7, J BOT , <10'	EA	3	$12,275.00	$36825.00
0425 1474	INLETS, CURB, TYPE 7, J BOT ,>10'	EA	3	$14,825.00	$44475.00
0425 1475	INLETS, CURB, TYPE 7, PARTIAL	EA	3	$3,500.00	$10500.00
0425 1479	INLETS, CURB, TYPE 7, MODIFY	EA	3	$4,000.00	$12000.00
0425 1481	INLETS, CURB, TYPE 8, <10'	EA	3	$9,750.00	$29250.00
0425 1483	INLETS, CURB, TYPE 8, J BOT , <10'	EA	3	$14,650.00	$43950.00
0425 1484	INLETS, CURB, TYPE 8, J BOT ,>10'	EA	3	$13,150.00	$39450.00
0425 1485	INLETS, CURB, TYPE 8, PARTIAL	EA	3	$3,500.00	$10500.00
0425 1489	INLETS, CURB, TYPE 8, MODIFY	EA	3	$4,000.00	$12000.00
0425 1501	INLETS, DT BOT, TYPE A, <10'	EA	3	$10,625.00	$31875.00
0425 1502	INLETS, DT BOT, TYPE A, >10'	EA	3	$12,450.00	$37350.00
0425 1503	INLETS, DT BOT, TYPE A, J BOT, <10'	EA	3	$13,200.00	$39600.00
0425 1504	INLETS, DT BOT, TYPE A, J BOT, >10'	EA	3	$14,250.00	$42750.00
0425 1505	INLETS, DT BOT, TYPE A, PARTIAL	EA	3	$3,750.00	$11250.00
0425 1511	INLETS, DT BOT, TYPE B, <10'	EA	3	$14,750.00	$44250.00
0425 1512	INLETS, DT BOT, TYPE B, >10'	EA	3	$17,650.00	$52950.00
0425 1513	INLETS, DT BOT, TYPE B, J BOT, <10'	EA	3	$14,900.00	$44700.00
0425 1514	INLETS, DT BOT, TYPE B, J BOT, >10'	EA	3	$17,525.00	$52575.00
0425 1515	INLETS, DT BOT, TYPE B, PARTIAL	EA	3	$5,100.00	$15300.00
0425 1519	INLETS, DT BOT, TYPE B, MODIFY	EA	3	$4,000.00	$12000.00
0425 1521	INLETS, DT BOT, TYPE C,<10'	EA	3	$8,850.00	$26550.00
0425 1522	INLETS, DT BOT, TYPE C,>10'	EA	3	$10,700.00	$32100.00
0425 1523	INLETS, DT BOT, TYPE C,JBOT, <10'	EA	3	$12,850.00	$38550.00
0425 1524	INLETS, DT BOT, TYPE C, JBOT, >10'	EA	3	$14,650.00	$43950.00
0425 1525	INLETS, DITCH BOTTOM, TYPE C, PARTIAL	EA	3	$3,200.00	$9600.00
0425 1529	INLETS, DT BOT, TYPE C, MODIFY	EA	3	$4,000.00	$12000.00
0425 1531	INLETS, DITCH BOTTOM, TYPE C MODIFIED- BACK OF SIDEWALK, <10'	EA	3	$9,950.00	$29850.00

0425 1532	INLETS, DITCH BOTTOM, TYPE C MODIFIED- BACK OF SIDEWALK, >10'	EA	3	$10,950.00	$32850.00
0425 1533	INLETS, DITCH BOTTOM TYPE C MODIFIED- BACK OF SIDEWALK, J BOT, <10'	EA	3	$15,250.00	$45750.00
0425 1534	INLETS, DITCH BOTTOM, TYPE C MODIFIED- BACK OF SIDEWALK, J BOT, >10'	EA	3	$17,175.00	$51525.00
0425 1535	INLETS, DITCH BOTTOM TYPE C MODIFIED- BACK OF SIDEWALK, PARTIAL	EA	3	$3,375.00	$10125.00
0425 1541	INLETS, DT BOT, TYPE D, <10'	EA	3	$10,300.00	$30900.00
0425 1542	INLETS, DT BOT, TYPE D, >10'	EA	3	$12,525.00	$37575.00
0425 1543	INLETS, DITCH BOTTOM, TYPE D, J BOT, <10'	EA	3	$11,800.00	$35400.00
0425 1544	INLETS, DITCH BOTTOM, TYPE D, J BOT, >10'	EA	3	$13,850.00	$41550.00
0425 1545	INLETS, DITCH BOTTOM, TYPE D, PARTIAL	EA	3	$3,650.00	$10950.00
0425 1549	INLETS, DT BOT, TYPE D, MODIFY	EA	3	$4,000.00	$12000.00
0425 1551	INLETS, DT BOT, TYPE E, <10'	EA	3	$11,500.00	$34500.00
0425 1552	INLETS, DT BOT, TYPE E, >10'	EA	3	$13,800.00	$41400.00
0425 1553	INLETS, DT BOT, TYPE E, J BOT, <10'	EA	3	$13,650.00	$40950.00
0425 1554	INLETS, DT BOT, TYPE E, J BOT, >10'	EA	3	$15,800.00	$47400.00
0425 1555	INLETS, DT BOT, TYPE E, PARTIAL	EA	3	$3,200.00	$9600.00
0425 1559	INLETS, DT BOT, TYPE E, MODIFY	EA	3	$4,000.00	$12000.00
0425 1561	INLETS, DT BOT, TYPE F, <10'	EA	3	$11,250.00	$33750.00
0425 1562	INLETS, DT BOT, TYPE F, >10'	EA	3	$14,000.00	$42000.00
0425 1563	INLETS, DITCH BOTTOM, TYPE F, J BOT, <10'	EA	3	$12,500.00	$37500.00
0425 1564	INLETS, DITCH BOTTOM, TYPE F, J BOT, >10'	EA	3	$15,050.00	$45150.00
0425 1565	INLETS, DITCH BOTTOM, TYPE F, PARTIAL	EA	3	$3,950.00	$11850.00
0425 1569	INLETS, DITCH BOTTOM, TYPE F, MODIFY	EA	3	$4,000.00	$12000.00
0425 1571	INLETS, DITCH BOTTOM, TYPE G, <10'	EA	3	$19,050.00	$57150.00
0425 1572	INLETS, DITCH BOTTOM, TYPE G, >10'	EA	3	$25,300.00	$75900.00
0425 1573	INLETS, DITCH BOTTOM, TYPE G, J BOT, <10'	EA	3	$17,950.00	$53850.00
0425 1574	INLETS, DITCH BOTTOM, TYPE G, J BOT, >10'	EA	3	$23,400.00	$70200.00
0425 1575	INLETS, DITCH BOTTOM, TYPE G, PARTIAL	EA	3	$5,150.00	$15450.00
0425 1579	INLETS, DITCH BOTTOM, TYPE G, MODIFY	EA	3	$4,000.00	$12000.00
0425 1581	INLETS, DT BOT, TYPE H, <10'	EA	3	$14,200.00	$42600.00

0425 1582	INLETS, DT BOT, TYPE H, >10'	EA	3	$18,050.00	$54150.00
0425 1583	INLETS, DT BOT, TYPE H, J BOTTOM <10'	EA	3	$19,050.00	$57150.00
0425 1584	INLETS, DT BOT, TYPE H, J BOTTOM >10'	EA	3	$24,250.00	$72750.00
0425 1585	INLETS, DT BOT, TYPE H, PARTIAL	EA	3	$4,200.00	$12600.00
0425 1589	INLETS, DT BOT, TYPE H, MODIFY	EA	3	$4,000.00	$12000.00
0425 1601	INLETS, DT BOT, TYPE J, <10'	EA	3	$11,675.00	$35025.00
0425 1602	INLETS, DT BOT, TYPE J, >10'	EA	3	$14,500.00	$43500.00
0425 1603	INLETS, DT BOT, TYPE J, J BOT, <10'	EA	3	$13,250.00	$39750.00
0425 1604	INLETS, DT BOT, TYPE J, JBOT,>10'	EA	3	$16,350.00	$49050.00
0425 1605	INLETS, DT BOT, TYPE J, PARTIAL	EA	3	$4,300.00	$12900.00
0425 1609	INLETS, DT BOT, TYPE J, MODIFY	EA	3	$4,000.00	$12000.00
0425 1611	INLETS, DITCH BOTTOM, TYPE K, <10'	EA	3	$10,775.00	$32325.00
0425 1619	INLETS, DITCH BOTTOM, TYPE K, J BOTTOM, MODIFY	EA	3	$14,300.00	$42900.00
0425 1701	INLETS, GUTTER, TYPE S, <10'	EA	3	$11,800.00	$35400.00
0425 1702	INLETS, GUTTER, TYPE S, >10'	EA	3	$14,700.00	$44100.00
0425 1703	INLETS, GUTTER, TYPE S, J BOTTOM <10'	EA	3	$12,700.00	$38100.00
0425 1704	INLETS, GUTTER, TYPE S, J BOTTOM, >10'	EA	3	$15,650.00	$46950.00
0425 1705	INLETS, GUTTER, TYPE S, PARTIAL	EA	3	$4,100.00	$12300.00
0425 1711	INLETS, GUTTER, TYPE V, <10'	EA	3	$11,750.00	$35250.00
0425 1712	INLETS, GUTTER, TYPE V, >10'	EA	3	$14,575.00	$43725.00
0425 1713	INLETS, GUTTER, TYPE V, J BOT, <10'	EA	3	$12,800.00	$38400.00
0425 1714	INLETS, GUTTER, TYPE V, J BOTTOM, >10'	EA	3	$15,750.00	$47250.00
0425 1715	INLETS, GUTTER, TYPE V, PARTIAL	EA	3	$4,200.00	$12600.00
0425 1719	INLETS, GUTTER, TYPE V, MODIFY	EA	3	$4,000.00	$12000.00
0425 1910	INLETS, CLOSED FLUME	EA	3	$16,150.00	$48450.00
0425 2 41	MANHOLES, P-7, <10'	EA	3	$10,000.00	$30000.00
0425 2 42	MANHOLES, P-7, >10'	EA	3	$10,850.00	$32550.00
0425 2 43	MANHOLES, P-7, PARTIAL	EA	3	$3,550.00	$10650.00
0425 2 61	MANHOLES, P-8, <10'	EA	3	$9,700.00	$29100.00

0425 2 62	MANHOLES, P-8, >10'	EA	3	$11,775.00	$35325.00
0425 2 63	MANHOLES, P-8, PARTIAL	EA	3	$3,550.00	$10650.00
0425 2 71	MANHOLES, J-7, <10'	EA	3	$14,350.00	$43050.00
0425 2 72	MANHOLES, J-7, >10'	EA	3	$16,800.00	$50400.00
0425 2 73	MANHOLES, J-7, PARTIAL	EA	3	$3,550.00	$10650.00
0425 2 91	MANHOLES, J-8, <10'	EA	3	$11,575.00	$34725.00
0425 2 92	MANHOLES, J-8, >10'	EA	3	$18,250.00	$54750.00
0425 2 93	MANHOLES, J-8, PARTIAL	EA	3	$3,550.00	$10650.00
0425 2110	MANHOLES, REPAIR	EA	3	$5,500.00	$16500.00
0425 3 41	JUNCTION BOX, DRAINAGE, P-7, <10'	EA	3	$15,000.00	$45000.00
0425 3 42	JUNCTION BOXES, P-7, >10'	EA	3	$17,000.00	$51000.00
0425 3 43	JUNCTION BOX, DRAINAGE, P-7, PARTIAL	EA	3	$3,850.00	$11550.00
0425 3 50	JUNCTION BOX, DRAINAGE, REPAIR	EA	3	$5,500.00	$16500.00
0425 3 61	JUNCTION BOXES, J-7, <10'	EA	3	$15,300.00	$45900.00
0425 3 62	JUNCTION BOXES, J-7, >10'	EA	3	$17,450.00	$52350.00
0425 3 63	JUNCTION BOXES, DRAINAGE, J-7, PARTIAL	EA	3	$7,300.00	$21900.00
0425 4	INLETS, ADJUST	EA	3	$5,500.00	$16500.00
0425 5	MANHOLE, ADJUST	EA	3	$5,175.00	$15525.00
0425 6	VALVE BOXES, ADJUST	EA	3	$1,300.00	$3900.00
0425 7	MANHOLE COVER- REPLACE	EA	3	$1,500.00	$4500.00
0425 8	DRAINAGE STRUCTURES, MISCELLANEOUS, ADJUST	EA	3	$5,500.00	$16500.00
0425 11	MODIFY EXISTING DRAINAGE STRUCTURE	EA	3	$5,500.00	$16500.00
0425 14 1	GRATE FOR EXISTING DRAINAGE STRUCTURE, FURNISH AND INSTALL	SF	3	$1,150.00	$3450.00
0425 15 41	INLET TOP, REPAIR, CURB INLET	EA	3	$5,750.00	$17250.00
0425 15 42	INLET TOP, REPAIR, DITCH BOTTOM INLET	EA	3	$5,750.00	$17250.00
0425 15 51	INLET TOP, REPLACE, CURB INLET	EA	3	$7,525.00	$22575.00
0425 15 52	INLET TOP, REPLACE, DITCH BOTTOM INLET	EA	3	$6,400.00	$19200.00
0425 16 11	DRAINAGE MANHOLE- REPLACE TOP AND RIM	EA	3	$8,125.00	$24375.00
0425 82	REPLACE GRATE	EA	3	$1,150.00	$3450.00

0430 94 1	DESILTING PIPE, 0 - 24"	LF	50	$32.00	$1600.00
0430 94 2	DESILTING PIPE, 25 - 36"	LF	50	$55.00	$2750.00
430173112	PIPE CULVERT OPTIONAL MATERIAL, ROUND, 12", GUTTER DRAIN	LF	50	$150.00	$7500.00
430173115	PIPE CULVERT OPTIONAL MATERIAL, ROUND, 15", GUTTER DRAIN	LF	50	$200.00	$10000.00
430173118	PIPE CULVERT OPTIONAL MATERIAL, ROUND, 18", GUTTER DRAIN	LF	50	$205.00	$10250.00
430173124	PIPE CULVERT OPTIONAL MATERIAL, ROUND, 24", GUTTER DRAIN	LF	50	$225.00	$11250.00
430173130	PIPE CULVERT OPTIONAL MATERIAL, ROUND, 30", GUTTER DRAIN	LF	50	$275.00	$13750.00
430173136	PIPE CULVERT OPTIONAL MATERIAL, ROUND, 36", GUTTER DRAIN	LF	50	$360.00	$18000.00
430173142	PIPE CULVERT, OPTIONAL MATERIAL, ROUND, 42", GUTTER DRAIN	LF	50	$465.00	$23250.00
430173148	PIPE CULVERT, OPTIONAL MATERIAL, ROUND, 48" GUTTER DRAIN	LF	50	$510.00	$25500.00
430173218	PIPE CULVERT OPTIONAL MATERIAL, OTHER/ELLIPTICAL, 18", GUTTER DRAIN	LF	50	$235.00	$11750.00
430174112	PIPE CULVERT, OPTIONAL MATERIAL, ROUND, 12"SD	LF	50	$145.00	$7250.00
430174115	PIPE CULVERT, OPTIONAL MATERIAL, ROUND, 15"SD	LF	50	$200.00	$10000.00
430174118	PIPE CULVERT, OPTIONAL MATERIAL, ROUND, 18"SD	LF	50	$205.00	$10250.00
430174124	PIPE CULVERT, OPTIONAL MATERIAL, ROUND, 24"SD	LF	50	$225.00	$11250.00
430174130	PIPE CULVERT, OPTIONAL MATERIAL, ROUND, 30"SD	LF	50	$275.00	$13750.00
430174142	PIPE CULVERT, OPTIONAL MATERIAL, ROUND, 42"SD	LF	50	$465.00	$23250.00
430174148	PIPE CULVERT, OPTIONAL MATERIAL, ROUND, 48"SD	LF	50	$510.00	$25500.00
430174154	PIPE CULVERT, OPTIONAL MATERIAL, ROUND, 54"SD	LF	50	$615.00	$30750.00
430174160	PIPE CULVERT, OPTIONAL MATERIAL, ROUND, 60"SD	LF	50	$820.00	$41000.00
430174172	PIPE CULVERT, OPTIONAL MATERIAL, ROUND, 72"SD	LF	50	$1,025.00	$51250.00
430174215	PIPE CULVERT, OPTIONAL MATERIAL, OTHER SHAPE - ELLIP/ARCH, 15"SD	LF	50	$220.00	$11000.00
430174218	PIPE CULVERT, OPTIONAL MATERIAL, OTHER SHAPE - ELLIP/ARCH, 18"SD	LF	50	$235.00	$11750.00
430174224	PIPE CULVERT, OPTIONAL MATERIAL, OTHER SHAPE - ELLIP/ARCH, 24"SD	LF	50	$285.00	$14250.00
430174230	PIPE CULVERT, OPTIONAL MATERIAL, OTHER SHAPE - ELLIP/ARCH, 30"SD	LF	50	$385.00	$19250.00
430174236	PIPE CULVERT, OPTIONAL MATERIAL, OTHER SHAPE - ELLIP/ARCH, 36"SD	LF	50	$510.00	$25500.00
430174242	PIPE CULVERT, OPTIONAL MATERIAL, ELLIP/OTHER, 42"SD	LF	50	$600.00	$30000.00
430174248	PIPE CULVERT,OPTIONAL MATERIAL,OTHER-ELIP/ARCH, 48"SD	LF	50	$785.00	$39250.00
430175112	PIPE CULVERT,OPTIONAL MATERIAL,ROUND, 12"S/CD	LF	50	$145.00	$7250.00

430175115	PIPE CULVERT,OPTIONAL MATERIAL,ROUND, 15"S/CD	LF	50	$200.00	$10000.00
430175118	PIPE CULVERT, OPTIONAL MATERIAL, ROUND, 18"S/CD	LF	250	$205.00	$51250.00
430175124	PIPE CULVERT, OPTIONAL MATERIAL, ROUND, 24"S/CD	LF	50	$225.00	$11250.00
430175130	PIPE CULVERT, OPT MATERIAL, ROUND, 30"S/CD	LF	50	$280.00	$14000.00
430175136	PIPE CULVERT, OPT MATERIAL, ROUND, 36"S/CD	LF	50	$360.00	$18000.00
430175140	PIPE CULVERT, OPT MATERIAL, ROUND, 40"S/CD	LF	50	$450.00	$22500.00
430175142	PIPE CULVERT, OPT MATERIAL, ROUND, 42"S/CD	LF	50	$465.00	$23250.00
430175148	PIPE CULVERT, OPT MATERIAL, ROUND, 48"S/CD	LF	50	$510.00	$25500.00
430175154	PIPE CULVERT, OPT MATERIAL, ROUND, 54"S/CD	LF	50	$615.00	$30750.00
430175160	PIPE CULVERT, OPT MATERIAL, ROUND, 60"S/CD	LF	50	$820.00	$41000.00
430175166	PIPE CULVERT, OPT MATERIAL, ROUND, 66"S/CD	LF	50	$910.00	$45500.00
430175172	PIPE CULVERT, OPT MATERIAL, ROUND, 72"S/CD	LF	50	$1,025.00	$51250.00
430175178	PIPE CULVERT, OPT MATERIAL, ROUND, 78" STORM/CROSS DRAIN	LF	50	$1,455.00	$72750.00
430175184	PIPE CULVERT, OPT MATERIAL, ROUND, 84"S/CD	LF	50	$1,565.00	$78250.00
430175196	PIPE CULVERT, OPT MATERIAL, ROUND, 96"S/CD	LF	50	$1,835.00	$91750.00
430175215	PIPE CULVERT,OPTIONAL MATERIAL,OTHER-ELIP/ARCH, 15"S/CD	LF	50	$220.00	$11000.00
430175218	PIPE CULVERT,OPTIONAL MATERIAL,OTHER-ELIP/ARCH, 18"S/CD	LF	50	$235.00	$11750.00
430175224	PIPE CULVERT,OPTIONAL MATERIAL,OTHER SHAPE-ELIP/ARCH, 24"S/CD	LF	50	$285.00	$14250.00
430175230	PIPE CULVERT, OPT MATERIAL, OTHER SHAPE - ELIP/ARCH, 30"S/CD	LF	50	$385.00	$19250.00
430175236	PIPE CULVERT, OPT MATERIAL, OTHER SHAPE - ELIP/ARCH, 36"S/CD	LF	50	$510.00	$25500.00
430175242	PIPE CULVERT, OPT MATERIAL, OTHER SHAPE - ELIP/ARCH, 42"S/CD	LF	50	$600.00	$30000.00
430175248	PIPE CULVERT, OPT MATERIAL, OTHER SHAPE - ELIP/ARCH, 48"S/CD	LF	50	$785.00	$39250.00
430175254	PIPE CULVERT, OPT MATERIAL, OTHER SHAPE - ELIP/ARCH, 54"S/CD	LF	50	$1,100.00	$55000.00
430175260	PIPE CULVERT, OPT MATERIAL, OTHER SHAPE - ELIP/ARCH, 60"S/CD	LF	50	$1,220.00	$61000.00
430175266	PIPE CULVERT, OPT MATERIAL, OTHER SHAPE - ELIP/ARCH, 66"S/CD	LF	50	$1,530.00	$76500.00
430175272	PIPE CULVERT, OPT MATERIAL, OTHER SHAPE - ELIP/ARCH, 72"S/CD	LF	50	$1,710.00	$85500.00
430175299	PIPE CULVERT,OPTIONAL MATERIAL,OTHER SHAPE-ELIP/ARCH, 99" OR >, S/CD	LF	50	$2,300.00	$115000.00
430185118	PIPE CULVERT,OPTIONAL MATERIAL,ROUND, JACK & BORE, 18" , STORM AND CROSS DRAIN	LF	50	$3,015.00	$150750.00
430185124	PIPE CULVERT,OPTIONAL MATERIAL,ROUND, JACK & BORE, 24", STORM AND CROSS DRAIN	LF	50	$3,035.00	$151750.00

430185130	PIPE CULVERT,OPTIONAL MATERIAL,ROUND, JACK & BORE, 30", STORM AND CROSS DRAIN	LF	50	$3,065.00	$153250.00
430185136	PIPE CULVERT,OPTIONAL MATERIAL,ROUND, JACK & BORE, 36", STORM AND CROSS DRAIN	LF	50	$3,120.00	$156000.00
430185142	PIPE CULVERT,OPTIONAL MATERIAL,ROUND, JACK & BORE, 42", STORM AND CROSS DRAIN	LF	50	$3,150.00	$157500.00
430185148	PIPE CULVERT,OPTIONAL MATERIAL,ROUND, JACK & BORE, 48", STORM AND CROSS DRAIN	LF	50	$3,300.00	$165000.00
430185154	PIPE CULVERT,OPTIONAL MATERIAL,ROUND, JACK & BORE, 54", STORM AND CROSS DRAIN	LF	50	$3,350.00	$167500.00
430185160	PIPE CULVERT,OPTIONAL MATERIAL,ROUND, JACK & BORE, 60" , STORM AND CROSS DRAIN	LF	50	$3,425.00	$171250.00
430185166	PIPE CULVERT,OPTIONAL MATERIAL,ROUND, JACK & BORE, 66" , STORM AND CROSS DRAIN	LF	50	$3,600.00	$180000.00
430185178	PIPE CULVERT,OPTIONAL MATERIAL,ROUND, JACK & BORE, 78" , STORM AND CROSS DRAIN	LF	50	$4,000.00	$200000.00
0430200 21	FLARED END SECTION, CONCRETE, 12"	EA	3	$2,750.00	$8250.00
0430200 23	FLARED END SECTION, CONCRETE, 15"	EA	3	$3,225.00	$9675.00
0430200 25	FLARED END SECTION, CONCRETE, 18"	EA	3	$3,475.00	$10425.00
0430200 29	FLARED END SECTION, CONCRETE, 24"	EA	3	$3,825.00	$11475.00
0430200 33	FLARED END SECTION, CONCRETE, 30"	EA	3	$5,325.00	$15975.00
0430200 38	FLARED END SECTION, CONCRETE, 36"	EA	3	$6,175.00	$18525.00
0430200 40	FLARED END SECTION, CONCRETE, 42"	EA	3	$7,400.00	$22200.00
0430200 41	FLARED END SECTION, CONCRETE, 48"	EA	3	$8,825.00	$26475.00
0430200 42	FLARED END SECTION, CONCRETE, 54"	EA	3	$14,200.00	$42600.00
0430200 43	FLARED END SECTION, CONCRETE, 60"	EA	3	$17,650.00	$52950.00
0430200 44	FLARED END SECTION, CONCRETE, 66"	EA	3	$19,725.00	$59175.00
0430200 45	FLARED END SECTION, CONCRETE, 72"	EA	3	$22,900.00	$68700.00
430600025	U-ENDWALL, STD 260, 1:6 SLOPE, 18"PIPE	EA	3	$3,500.00	$10500.00
430600125	U-ENDWALL, STD 260, 1:4 SLOPE, 18"PIPE	EA	3	$2,750.00	$8250.00
430602123	U-ENDWALL, WITH GRATE,STD INDEX 260, 1:4 SLOPE, 15"	EA	3	$2,950.00	$8850.00
430602125	U-ENDWALL, WITH GRATE,STD 260, 1:4 SLOPE, 18"	EA	3	$3,250.00	$9750.00
430602129	U-ENDWALL, WITH GRATE,STD 260, 1:4 SLOPE, 24"	EA	3	$3,900.00	$11700.00
430602133	U-ENDWALL, WITH GRATE,STD INDEX 260, 1:4 SLOPE, 30"	EA	3	$5,175.00	$15525.00
430610025	U-ENDWALL, STD 261, 1:6 SLOPE, 18"PIPE	EA	3	$3,500.00	$10500.00
430610029	U-ENDWALL, STD 261, 1:6 SLOPE, 24"PIPE	EA	3	$4,925.00	$14775.00
430610033	U-ENDWALL, STD 261, 1:6 SLOPE, 30"PIPE	EA	3	$6,075.00	$18225.00

430610123	U-ENDWALL, STD 261, 1:4 SLOPE, 15"PIPE	EA	3	$2,475.00	$7425.00
430610125	U-ENDWALL, STD 261, 1:4 SLOPE, 18"PIPE	EA	3	$2,750.00	$8250.00
430610129	U-ENDWALL, STD 261, 1:4 SLOPE, 24"PIPE	EA	3	$3,900.00	$11700.00
430610133	U-ENDWALL, STD 261, 1:4 SLOPE, 30"PIPE	EA	3	$4,675.00	$14025.00
430610223	U-ENDWALL, STD 261, 1:3 SLOPE, 15"PIPE	EA	3	$2,125.00	$6375.00
430610225	U-ENDWALL, STD 261, 1:3 SLOPE, 18"PIPE	EA	3	$2,350.00	$7050.00
430610229	U-ENDWALL, STD 261, 1:3 SLOPE, 24"PIPE	EA	3	$3,350.00	$10050.00
430610233	U-ENDWALL, STD 261, 1:3 SLOPE, 30"PIPE	EA	3	$3,925.00	$11775.00
430610323	U-ENDWALL, STD 261, 1:2 SLOPE, 15"PIPE	EA	3	$2,550.00	$7650.00
430610325	U-ENDWALL, STD 261, 1:2 SLOPE, 18"PIPE	EA	3	$2,800.00	$8400.00
430610329	U-ENDWALL, STD 261,1:2 SLOPE, 24"PIPE	EA	3	$3,900.00	$11700.00
430611023	U-ENDWALL, STD 261, BAFFLES, 1:6 SLOPE, 15"PIPE	EA	3	$3,575.00	$10725.00
430611025	U-ENDWALL, STD 261, BAFFLES, 1:6 SLOPE, 18"PIPE	EA	3	$4,000.00	$12000.00
430611029	U-ENDWALL, STD 261, BAFFLES, 1:6 SLOPE, 24"PIPE	EA	3	$5,425.00	$16275.00
430611033	U-ENDWALL, STD 261, BAFFLES, 1:6 SLOPE, 30"PIPE	EA	3	$6,600.00	$19800.00
430611123	U-ENDWALL WITH BAFFLES, STD 261, 1:4 SLOPE, 15"PIPE	EA	3	$2,975.00	$8925.00
430611125	U-ENDWALL WITH BAFFLES, STD 261, 1:4 SLOPE, 18"PIPE	EA	3	$3,250.00	$9750.00
430611129	U-ENDWALL WITH BAFFLES, STD 261, 1:4 SLOPE, 24"PIPE	EA	3	$4,400.00	$13200.00
430611133	U-ENDWALL WITH BAFFLES,STD 261,1:4 SLOPE,30"PIPE	EA	3	$5,175.00	$15525.00
430611223	U-ENDWALL WITH BAFFLES, STD 261, 1:3 SLOPE, 15"PIPE	EA	3	$2,625.00	$7875.00
430611225	U-ENDWALL WITH BAFFLES, STD 261, 1:3 SLOPE, 18"PIPE	EA	3	$2,850.00	$8550.00
430611229	U-ENDWALL WITH BAFFLES, STD 261, 1:3 SLOPE, 24"PIPE	EA	3	$3,850.00	$11550.00
430611233	U-ENDWALL, STD 261, BAFFLES, 1:3 SLOPE, 30"PIPE	EA	3	$4,400.00	$13200.00
430611323	U-ENDWALL WITH BAFFLES, STD 261, 1:2 SLOPE, 15"PIPE	EA	3	$3,025.00	$9075.00
430611325	U-ENDWALL WITH BAFFLES, STD 261, 1:2 SLOPE, 18"PIPE	EA	3	$3,300.00	$9900.00
430611329	U-ENDWALL WITH BAFFLES, STD 261, 1:2 SLOPE, 24"PIPE	EA	3	$5,175.00	$15525.00
430611333	U-ENDWALL, BAFFLES, STD 261, 1:2 SLOPE, 30"PIPE	EA	3	$5,175.00	$15525.00
430612023	U-ENDWALL WITH GRATE, STD 261, 1:6 SLOPE, 15"	EA	3	$3,550.00	$10650.00
430612025	U-ENDWALL WITH GRATE, STD 261, 1:6 SLOPE, 18"PIPE	EA	3	$4,000.00	$12000.00

430612029	U-ENDWALL WITH GRATE, STD 261, 1:6 SLOPE, 24"PIPE	EA	3	$5,425.00	$16275.00
430612033	U-ENDWALL WITH GRATE, STD 261, 1:6 SLOPE, 30"	EA	3	$6,575.00	$19725.00
430612125	U-ENDWALL WITH GRATE, STD 261, 1:4 SLOPE, 18"PIPE	EA	3	$3,250.00	$9750.00
430612129	U-ENDWALL WITH GRATE, STD 261, 1:4 SLOPE, 24"PIPE	EA	3	$4,400.00	$13200.00
430612133	U-ENDWALL, GRATE, STD 261, 1:4 SLOPE, 30" PIPE	EA	3	$5,175.00	$15525.00
430612329	U-ENDWALL WITH GRATE, STD 261, 1:2 SLOPE, 24"PIPE	EA	3	$4,400.00	$13200.00
430612333	U-ENDWALL, GRATE, STD 261, 1:2 SLOPE, 30" PIPE	EA	3	$5,175.00	$15525.00
430613025	U-ENDWALL, WITH BAFFLES & GRATE, STD 261,1:6 SLOPE, 18"	EA	3	$4,000.00	$12000.00
430613029	U-ENDWALL, WITH BAFFLES & GRATE, STD 261,1:6 SLOPE, 24"PIPE	EA	3	$5,425.00	$16275.00
430613033	U-ENDWALL, WITH BAFFLES & GRATE, STD 261,1:6 SLOPE, 30"	EA	3	$6,575.00	$19725.00
430613123	U-ENDWALL, WITH BAFFLES & GRATE, STD 261,1:4 SLOPE,15"PIPE	EA	3	$3,000.00	$9000.00
430613125	U-ENDWALL, WITH BAFFLES & GRATE, STD 261,1:4 SLOPE,18"PIPE	EA	3	$3,250.00	$9750.00
430613129	U-ENDWALL, WITH BAFFLES & GRATE, STD 261,1:4 SLOPE, 24"PIPE	EA	3	$4,400.00	$13200.00
430613133	U-ENDWALL, WITH BAFFLES & GRATE, STD 261,1:4 SLOPE,30"PIPE	EA	3	$5,175.00	$15525.00
430613225	U-ENDWALL, WITH BAFFLES & GRATE, STD 261,1:3 SLOPE,18"PIPE	EA	3	$2,850.00	$8550.00
430613229	U-ENDWALL, WITH BAFFLES & GRATE, STD 261,1:3 SLOPE, 24 "PIPE	EA	3	$3,850.00	$11550.00
430613233	U-ENDWALL, WITH BAFFLES & GRATE, STD 261,1:3 SLOPE,30"PIPE	EA	3	$4,400.00	$13200.00
430613325	U-ENDWALL, WITH BAFFLES & GRATE, STD 261,1:2 SLOPE,18"PIPE	EA	3	$3,300.00	$9900.00
430613333	U-ENDWALL, WITH BAFFLES & GRATE, STD 261,1:2 SLOPE,30"PIPE	EA	3	$5,175.00	$15525.00
430830	PIPE FILLING AND PLUGGING- PLACE OUT OF SERVICE	CY	20	$1,450.00	$29000.00
430950	DESILTING CONCRETE BOX CULVERT	CY	20	$400.00	$8000.00
0430963 1	PVC PIPE FOR BACK OF SIDEWALK, 4"	LF	50	$50.00	$2500.00
430982120	MITERED END SECTION, OPTIONAL ROUND, 8" CD	EA	3	$1,500.00	$4500.00
430982121	MITERED END SECTION, OPTIONAL ROUND, 12" CD	EA	3	$1,500.00	$4500.00
430982123	MITERED END SECTION, OPTIONAL ROUND, 15" CD	EA	3	$1,750.00	$5250.00
430982125	MITERED END SECTION, OPTIONAL ROUND, 18" CD	EA	3	$2,750.00	$8250.00
430982129	MITERED END SECTION, OPTIONAL ROUND, 24" CD	EA	3	$3,250.00	$9750.00
430982133	MITERED END SECTION, OPTIONAL ROUND, 30" CD	EA	3	$4,000.00	$12000.00
430982138	MITERED END SECTION, OPTIONAL ROUND, 36" CD	EA	3	$4,500.00	$13500.00

430982140	MITERED END SECTION, OPTIONAL ROUND, 42" CD	EA	3	$5,500.00	$16500.00
430982141	MITERED END SECTION, OPTIONAL ROUND, 48" CD	EA	3	$6,500.00	$19500.00
430982142	MITERED END SECTION, OPTIONAL ROUND, 54" CD	EA	3	$8,500.00	$25500.00
430982143	MITERED END SECTION, OPTIONAL ROUND, 60" CD	EA	3	$12,000.00	$36000.00
430982144	MITERED END SECTION, OPTIONAL ROUND, 66" CD	EA	3	$13,500.00	$40500.00
430982145	MITERED END SECTION, OPTIONAL ROUND, 72" CD	EA	3	$15,000.00	$45000.00
430982147	MITERED END SECTION, OPTIONAL ROUND, 84" CD	EA	3	$15,000.00	$45000.00
430982623	MITERED END SECTION, OPTIONAL - ELLIPTICAL / ARCH, 15" CD	EA	3	$1,750.00	$5250.00
430982625	MITERED END SECTION, OPTIONAL - ELLIPTICAL / ARCH, 18" CD	EA	3	$2,750.00	$8250.00
430982629	MITERED END SECTION, OPTIONAL - ELLIPTICAL / ARCH, 24" CD	EA	3	$3,250.00	$9750.00
430982633	MITERED END SECTION, OPTIONAL - ELLIPTICAL / ARCH, 30" CD	EA	3	$4,000.00	$12000.00
430982638	MITERED END SECTION, OPTIONAL - ELLIPTICAL / ARCH, 36" CD	EA	3	$4,500.00	$13500.00
430982640	MITERED END SECTION, OPTIONAL - ELLIPTICAL / ARCH, 42" CD	EA	3	$5,500.00	$16500.00
430982641	MITERED END SECTION, OPTIONAL - ELLIPTICAL / ARCH, 48" CD	EA	3	$6,500.00	$19500.00
430982642	MITERED END SECTION, OPTIONAL - ELLIPTICAL / ARCH, 54" CD	EA	3	$8,500.00	$25500.00
430982643	MITERED END SECTION, OPTIONAL - ELLIPTICAL / ARCH, 60" CD	EA	3	$12,000.00	$36000.00
430982645	MITERED END SECTION, OPTIONAL - ELLIPTICAL / ARCH, 72" CD	EA	3	$13,500.00	$40500.00
430984120	MITERED END SECTION, OPTIONAL ROUND, 8" SD	EA	3	$1,500.00	$4500.00
430984121	MITERED END SECTION, OPTIONAL ROUND, 12" SD	EA	3	$1,500.00	$4500.00
430984123	MITERED END SECTION, OPTIONAL ROUND, 15" SD	EA	3	$1,750.00	$5250.00
430984125	MITERED END SECTION, OPTIONAL ROUND, 18" SD	EA	3	$2,750.00	$8250.00
430984129	MITERED END SECTION, OPTIONAL ROUND, 24" SD	EA	3	$3,250.00	$9750.00
430984133	MITERED END SECTION , OPTIONAL ROUND, 30" SD	EA	3	$4,000.00	$12000.00
430984138	MITERED END SECTION , OPTIONAL ROUND, 36" SIDE DRAIN	EA	3	$4,500.00	$13500.00
430984140	MITERED END SECTION , OPTIONAL ROUND, 42" SD	EA	3	$5,500.00	$16500.00
430984141	MITERED END SECTION , OPTIONAL ROUND, 48" SD	EA	3	$6,500.00	$19500.00
430984142	MITERED END SECTION , OPTIONAL ROUND, 54" SD	EA	3	$8,500.00	$25500.00
430984143	MITERED END SECTION , OPTIONAL ROUND, 60" SD	EA	3	$12,000.00	$36000.00
430984144	MITERED END SECTION, OPTIONAL ROUND, 66" SIDE DRAIN	EA	3	$13,500.00	$40500.00

430984145	MITERED END SECTION, OPTIONAL ROUND, 72" SIDE DRAIN	EA	3	$15,000.00	$45000.00
430984147	MITERED END SECTION, OPTIONAL ROUND, 84" SD	EA	3	$15,000.00	$45000.00
430984623	MITERED END SECTION, OPTIONAL OTHER - ELLIP/ARCH, 15" SD	EA	3	$1,750.00	$5250.00
430984625	MITERED END SECT, OPTIONAL - ELLIPTICAL / ARCH, 18" SD	EA	3	$2,750.00	$8250.00
430984629	MITERED END SECT, OPTIONAL - ELLIPTICAL / ARCH, 24" SD	EA	3	$3,250.00	$9750.00
430984633	MITERED END SECT, OPTIONAL /ELLIP/ARCH, 30" SD	EA	3	$4,000.00	$12000.00
430984638	MITERED END SECT, OPTIONAL /ELLIP/ARCH, 36" SD	EA	3	$4,500.00	$13500.00
430984640	MITERED END SECT, OPTIONAL /ELLIP/ARCH, 42" SD	EA	3	$5,500.00	$16500.00
430984641	MITERED END SECT, OPTIONAL /ELLIP/ARCH, 48" SD	EA	3	$6,500.00	$19500.00
430984642	MITERED END SECT, OPTIONAL /ELLIP/ARCH, 54" SD	EA	3	$8,500.00	$25500.00
430984643	MITERED END SECTION, OPTIONAL SHAPE /ELLIP/ARCH, 60" SIDE DRAIN	EA	3	$12,000.00	$36000.00
430984644	MITERED END SECT, OPTIONAL /ELLIP/ARCH, 66" SD	EA	3	$13,500.00	$40500.00
430984645	MITERED END SECT, OPTIONAL /ELLIP/ARCH, 72" SD	EA	3	$15,000.00	$45000.00
430990	MITERED END SECT, REPLACE GRATE	EA	3	$5,900.00	$17700.00
0431 1 1	PIPE LINER, OPTIONAL MATERIAL, 0-24"	LF	50	$305.00	$15250.00
0431 1 2	PIPE LINER, OPTIONAL MATERIAL, 25-36"	LF	50	$430.00	$21500.00
0431 1 3	PIPE LINER, OPTIONAL MATERIAL, 37-48"	LF	50	$620.00	$31000.00
0431 1 4	PIPE LINER, OPTIONAL MATERIAL, 49 - 60"	LF	50	$840.00	$42000.00
0431 1 5	PIPE LINER, OPTIONAL MATERIAL, 61" AND GREATER	LF	50	$925.00	$46250.00
0436 1 1	TRENCH DRAIN, STANDARD	LF	50	$250.00	$12500.00
0440 1 10	UNDERDRAIN, TYPE I	LF	50	$110.00	$5500.00
0440 1 20	UNDERDRAIN, TYPE II	LF	50	$115.00	$5750.00
0440 1 30	UNDERDRAIN, TYPE III	LF	50	$120.00	$6000.00
0440 1 50	UNDERDRAIN, TYPE V	LF	50	$145.00	$7250.00
0440 70	UNDERDRAIN INSPECTION BOX	EA	5	$4,275.00	$21375.00
0440 73 1	UNDERDRAIN OUTLET PIPE, 4"	LF	50	$48.50	$2425.00
0440 73 2	UNDERDRAIN OUTLET PIPE, 6"	LF	50	$52.50	$2625.00
0440 73 3	UNDERDRAIN OUTLET PIPE, 8"	LF	50	$72.50	$3625.00
0440 73 4	UNDERDRAIN OUTLET PIPE, 10"	LF	50	$81.00	$4050.00

0440 73 5	UNDERDRAIN OUTLET PIPE, 12"	LF	50	$81.00	$4050.00
0443 70 3	FRENCH DRAIN, 18"	LF	50	$255.00	$12750.00
0443 70 4	FRENCH DRAIN, 24"	LF	50	$280.00	$14000.00
0443 70 5	FRENCH DRAIN, 30"	LF	50	$340.00	$17000.00
0443 70 6	FRENCH DRAIN, 36"	LF	50	$550.00	$27500.00
0443 70 7	FRENCH DRAIN, 42"	LF	50	$725.00	$36250.00
0443 70 8	FRENCH DRAIN, 48"	LF	50	$825.00	$41250.00
0443 70 9	FRENCH DRAIN, 54"	LF	50	$975.00	$48750.00
0443 70 10	FRENCH DRAIN, 60"	LF	50	$1,250.00	$62500.00
0443 72 10	FRENCH DRAIN- AGGREGATE WITHOUT PIPE, 0-0.9’ DEPTH	SY	10	$225.00	$2250.00
0443 72 11	FRENCH DRAIN- AGGREGATE WITHOUT PIPE, 1-1.9’ DEPTH	SY	10	$250.00	$2500.00
0443 72 12	FRENCH DRAIN- AGGREGATE WITHOUT PIPE, 2-2.9’ DEPTH	SY	10	$300.00	$3000.00
0443 72 13	FRENCH DRAIN- AGGREGATE WITHOUT PIPE, 3-3.9’ DEPTH	SY	10	$500.00	$5000.00
0443 72 14	FRENCH DRAIN- AGGREGATE WITHOUT PIPE, 4-4.9’ DEPTH	SY	10	$750.00	$7500.00
0446 1 1	EDGEDRAIN DRAINCRETE, STANDARD	LF	50	$500.00	$25000.00
0446 71 1	EDGEDRAIN OUTLET PIPE, 4"	LF	50	$135.00	$6750.00
0515 1 1	PIPE HANDRAIL - GUIDERAIL, STEEL	LF	50	$65.00	$3250.00
0515 1 2	PIPE HANDRAIL - GUIDERAIL, ALUMINUM	LF	50	$80.00	$4000.00
0515 1 41	PIPE HANDRAIL - GUIDERAIL, RELOCATE, STEEL	LF	50	$31.00	$1550.00
0515 1 42	PIPE HANDRAIL - GUIDERAIL, RELOCATE, ALUMINUM	LF	50	$31.00	$1550.00
0515 2111	PEDESTRIAN / BICYCLE RAILING, NS, 42" TYPE 1	LF	50	$81.50	$4075.00
0515 2211	PEDESTRIAN / BICYCLE RAILING, STEEL, 42" TYPE 1	LF	50	$81.50	$4075.00
0515 2212	PEDESTRIAN / BICYCLE RAILING, STEEL, 42" TYPE 2	LF	50	$81.50	$4075.00
0515 2213	PEDESTRIAN / BICYCLE RAILING, STEEL, 42" TYPE 3	LF	50	$81.50	$4075.00
0515 2221	PEDESTRIAN/ BICYCLE RAILING, STEEL ONLY,54" TYPE 1	LF	50	$100.00	$5000.00
0515 2231	PEDESTRIAN/ BICYCLE RAILING, STEEL ONLY,48" TYPE 1	LF	50	$100.00	$5000.00
0515 2311	PEDESTRIAN/ BICYCLE RAILING, ALUMINUM ONLY,42" TYPE 1	LF	50	$55.50	$2775.00
0515 2312	PEDESTRIAN / BICYCLE RAILING, ALUMINUM, 42" TYPE 2	LF	50	$55.50	$2775.00
0515 2313	PEDESTRIAN / BICYCLE RAILING, ALUMINUM, 42" TYPE 3	LF	50	$55.50	$2775.00

0515 2321	PEDESTRIAN/ BICYCLE RAILING, ALUMINUM ONLY,54" TYPE 1	LF	50	$75.00	$3750.00
0515 2411	PEDESTRIAN / BICYCLE RAILING, SPECIAL MATERIALS- WEATHERING STEEL, 42" TYPE 1	LF	50	$81.50	$4075.00
0515 2500	PEDESTRIAN / BICYCLE RAILING, RELOCATE	LF	50	$31.00	$1550.00
0519 78	BOLLARDS	EA	10	$1,500.00	$15000.00
0520 1 7	CONCRETE CURB & GUTTER, TYPE E	LF	1000	$62.00	$62000.00
0520 1 10	CONCRETE CURB & GUTTER, TYPE F	LF	5000	$85.00	$425000.00
0520 1 11	CONCRETE CURB & GUTTER, VARIABLE HEIGHT TYPE F	LF	100	$90.00	$9000.00
0520 1 12	CONCRETE CURB & GUTTER, TYPE F WITH SPECIAL GUTTER PROFILE	LF	100	$95.00	$9500.00
0520 2 1	CONCRETE CURB, TYPE A	LF	100	$60.00	$6000.00
0520 2 2	CONCRETE CURB, TYPE B	LF	1000	$60.00	$60000.00
0520 2 4	CONCRETE CURB, TYPE D	LF	1000	$60.00	$60000.00
0520 3	VALLEY GUTTER- CONCRETE	LF	100	$75.00	$7500.00
0520 5 11	TRAFFIC SEPARATOR CONCRETE - TYPE I, 4' WIDE	LF	50	$150.00	$7500.00
0520 5 12	TRAFFIC SEPARATOR CONCRETE - TYPE I, 6' WIDE	LF	50	$175.00	$8750.00
520 5 16	TRAFFIC SEPARATOR CONCRETE- TYPE I, 8.5' WIDE	LF	50	$225.00	$11250.00
0520 5 21	TRAFFIC SEPARATOR - CONCRETE, TYPE II, 4' WIDE	LF	50	$165.00	$8250.00
0520 5 22	TRAFFIC SEPARATOR - CONCRETE, TYPE II, 6' WIDE	LF	50	$195.00	$9750.00
0520 5 26	TRAFFIC SEPARATOR CONCRETE- TYPE II, 8.5' WIDE	LF	50	$250.00	$12500.00
0520 5 41	TRAFFIC SEPARATOR CONCRETE, TYPE IV, 4' WIDE	LF	50	$200.00	$10000.00
0520 5 42	TRAFFIC SEPARATOR CONCRETE, TYPE IV, 6' WIDE	LF	50	$250.00	$12500.00
0520 5 46	TRAFFIC SEPARATOR CONCRETE, TYPE IV, 8.5' WIDE	LF	50	$300.00	$15000.00
0520 5 51	TRAF SEP CONC, TYPE V, 4' WIDE	LF	50	$250.00	$12500.00
0520 6	SHOULDER GUTTER- CONCRETE	LF	50	$80.00	$4000.00
0520 70	CONCRETE TRAFFIC SEPARATOR, SPECIAL - VARIABLE WIDTH	SY	50	$135.00	$6750.00
0521 72 2	SHOULDER CONCRETE BARRIER WALL, BOX CULVERT	LF	100	$400.00	$40000.00
0521 72 3	SHOULDER CONCRETE BARRIER WALL, RIGID-SHOULDER	LF	100	$400.00	$40000.00
0521 72 4	SHOULDER CONCRETE BARRIER WALL, RIGID RETAINING	LF	100	$400.00	$40000.00
0521 72 5	SHOULDER CONCRETE BARRIER WALL, RIGID-CURB & GUTTER	LF	100	$375.00	$37500.00
0521 72 10	SHOULDER CONCRETE BARRIER WALL, RIGID SHOULDER 42"	LF	100	$400.00	$40000.00

0521 72 11	SHOULDER CONCRETE BARRIER WALL, RIGID SHOULDER 54"	LF	100	$425.00	$42500.00
0521 73	CONCRETE BARRIER WALL, REMOVAL	LF	20	$200.00	$4000.00
0522 1	CONCRETE SIDEWALK AND DRIVEWAY, 4" THICK	SY	3000	$120.00	$360000.00
0522 2	CONCRETE SIDEWALK AND DRIVEWAY, 6" THICK	SY	500	$140.00	$70000.00
0522 3	BUS BOARDING PAD - CONCRETE	SY	50	$155.00	$7750.00
0522 4	BUS SHELTER PAD - CONCRETE	SY	50	$155.00	$7750.00
0524 1 1	CONCRETE DITCH PAVT, NON REINFORCED, 3"	SY	10	$200.00	$2000.00
0524 1 2	CONCRETE DITCH PAVEMENT, NON REINFORCED, 4"	SY	10	$200.00	$2000.00
0524 1 3	CONCRETE DITCH PAVEMENT, NON REINFORCED, 5"	SY	10	$225.00	$2250.00
0524 1 4	CONCRETE DITCH PAVEMENT, NON REINFORCED, 6"	SY	10	$225.00	$2250.00
0524 1 19	CONCRETE DITCH PAVT, 3", REINFORCED	SY	10	$200.00	$2000.00
0524 1 29	CONCRETE DITCH PAVEMENT, 4", REINFORCED	SY	10	$200.00	$2000.00
0524 1 49	CONCRETE DITCH PAVEMENT, 6", REINFORCED	SY	10	$225.00	$2250.00
0524 2 1	CONCRETE SLOPE PAVEMENT,NON REINFORCED, 3"	SY	10	$250.00	$2500.00
0524 2 2	CONCRETE SLOPE PAVEMENT,NON REINFORCED, 4"	SY	10	$250.00	$2500.00
0524 2 4	CONCRETE SLOPE PAVEMENT,NON REINFORCED, 6"	SY	10	$275.00	$2750.00
0524 2 29	CONCRETE SLOPE PAVEMENT, 4", REINFORCED	SY	10	$250.00	$2500.00
0524 2 49	CONCRETE SLOPE PAVEMENT, 6", REINFORCED	SY	10	$275.00	$2750.00
0524 3	CONC CORE DITCH BLOCKS	CY	10	$1,500.00	$15000.00
0526 1 1	PAVERS, ARCHITECTURAL, ROADWAY	SY	50	$150.00	$7500.00
0526 1 2	PAVERS, ARCHITECTURAL, SIDEWALK	SY	50	$150.00	$7500.00
0527 2	DETECTABLE WARNINGS	SF	1000	$30.00	$30000.00
0530 1	RIPRAP, SAND-CEMENT	CY	50	$900.00	$45000.00
0530 3 3	RIPRAP- RUBBLE, BANK AND SHORE	TN	10	$675.00	$6750.00
0530 3 4	RIPRAP, RUBBLE, F&I, DITCH LINING	TN	10	$650.00	$6500.00
0530 3 5	RIPRAP- RUBBLE, COASTAL SHORE- LARGE BOULDERS	TN	10	$850.00	$8500.00
0530 74	BEDDING STONE	TN	10	$550.00	$5500.00
0536 1 0	GUARDRAIL -ROADWAY, GENERAL TL-2	LF	250	$125.00	$31250.00
0536 1 1	GUARDRAIL -ROADWAY, GENERAL TL-3	LF	250	$65.00	$16250.00

0536 1 3	GUARDRAIL ROADWAY, DOUBLE FACE	LF	250	$150.00	$37500.00
0536 1 11	GUARDRAIL, ROADWAY, MODIFIED THRIE BEAM	LF	250	$150.00	$37500.00
0536 1 12	GUARDRAIL ROADWAY, MODIFIED THRIE BEAM-DOUBLE FACE	LF	250	$150.00	$37500.00
0536 5 1	RUB RAIL FOR GUARDRAIL, SINGLE SIDED	LF	250	$65.00	$16250.00
0536 5 2	RUB RAIL FOR GUARDRAIL, DOUBLE SIDED	LF	250	$125.00	$31250.00
0536 7 1	SPECIAL GUARDRAIL POST- DEEP POST FOR SLOPE BREAK CONDITION-TIMBER OR STEEL	EA	5	$250.00	$1250.00
0536 7 2	SPECIAL GUARDRAIL POST- SPECIAL STEEL POST FOR CONCRETE STRUCTURE MOUNT	EA	5	$1,500.00	$7500.00
0536 7 3	SPECIAL GUARDRAIL POST- ENCASED POST FOR SHALLOW MOUNT	EA	5	$500.00	$2500.00
0536 7 4	SPECIAL GUARDRAIL POST- FRANGIBLE LEAVE-OUT FOR MOUNTING THROUGH CONCRETE SURFACE	EA	5	$850.00	$4250.00
0536 8 11	APPROACH TRANSITION TO RIGID BARRIER- BRIDGE ANCHORAGE ASSEMBLY CONNECTION, FURNISH & INSTALL	EA	5	$4,000.00	$20000.00
0536 8 12	APPROACH TRANSITION CONNECTION TO RIGID BARRIER, FURNISH AND INSTALL, TL-2	EA	5	$3,500.00	$17500.00
0536 8 13	APPROACH TRANSITION CONNECTION TO RIGID BARRIER, FURNISH AND INSTALL, TL-3	EA	5	$3,750.00	$18750.00
0536 8 40	APPROACH TRANSITION TO RIGID BARRIER- BRIDGE ANCHORAGE ASSEMBLY, RELOCATE	EA	5	$2,850.00	$14250.00
0536 8 60	APPROACH TRANSITION TO RIGID BARRIER- BRIDGE ANCHORAGE ASSEMBLY, REMOVE	EA	5	$2,000.00	$10000.00
0536 73	GUARDRAIL REMOVAL	LF	25	$50.00	$1250.00
0536 85 22	GUARDRAIL END ANCHORAGE ASSEMBLY/END TREATMENT- FLARED	EA	2	$4,000.00	$8000.00
0536 85 24	GUARDRAIL END ANCHORAGE ASSEMBLY/END TREATMENT- PARALLEL	EA	2	$4,000.00	$8000.00
0536 85 25	GUARDRAIL END ANCHORAGE ASSEMBLY/END TREATMENT- TYPE II	EA	2	$2,500.00	$5000.00
0536 85 26	GUARDRAIL END ANCHORAGE ASSEMBLY/END TREATMENT- TYPE CRT	EA	2	$4,000.00	$8000.00
0536 85 27	GUARDRAIL END ANCHORAGE ASSEMBLY/END TREATMENT- DOUBLE FACE TERMINAL	EA	2	$5,750.00	$11500.00
0538 1	GUARDRAIL- RESET	LF	25	$50.00	$1250.00
0539 80111	OPAQUE VISUAL BARRIER, F&I, CONCRETE, 2' 3"	LF	25	$750.00	$18750.00
0544 74 40	RELOCATE CRASH CUSHION - ALL OPTIONS	EA	2	$1,500.00	$3000.00
0544 75 1	CRASH CUSHION	EA	2	$33,450.00	$66900.00
0546 71	RUMBLE STRIPS	PS	10	$2,750.00	$27500.00
0546 72 52	RUMBLE STRIPS, GROUND-IN, 16" CENTERLINE USED WITH RUMBLE STRIPE	GM	1	$2,750.00	$2750.00
0546 72 53	RUMBLE STRIPS, GROUND-IN, 8" EDGELINE USED WITH RUMBLE STRIPE	GM	1	$2,750.00	$2750.00
0546 72 55	RUMBLE STRIPS, GROUND-IN, 16" SHOULDER	GM	1	$2,750.00	$2750.00
0550 10110	FENCING, TYPE A, 0.0-5.0', STANDARD	LF	25	$25.00	$625.00

0550 10118	FENCING, TYPE A, 0.0-5.0', TYPE A STANDARD, RESET EXISTING	LF	25	$20.00	$500.00
0550 10119	FENCING, TYPE A, 0.0-5.0', SPECIAL FEATURES	LF	25	$30.00	$750.00
0550 10120	FENCING, TYPE A, 5.1-6.0, STANDARD	LF	25	$15.00	$375.00
0550 10128	FENCING, TYPE A, 5.1-6.0', RESET EXISTING	LF	25	$25.00	$625.00
0550 10130	FENCING, TYPE A, 6.1-7.0, STANDARD	LF	25	$30.00	$750.00
0550 10140	FENCING, TYPE A, 7.1-8.0', STANDARD	LF	25	$32.00	$800.00
0550 10148	FENCING, TYPE A, 7.1-8.0', RESET EXISTING	LF	25	$40.00	$1000.00
0550 10149	FENCING, TYPE A, 7.1-8.0', SPECIAL FEATURES	LF	25	$42.00	$1050.00
0550 10150	FENCING, TYPE A, 8.1-10.0', STANDARD	LF	25	$30.00	$750.00
0550 10158	FENCING, TYPE A, 8.1-10.0', RESET EXISTING	LF	25	$30.00	$750.00
0550 10159	FENCING, TYPE A, 8.1-10.0', SPECIAL FEATURES	LF	25	$48.00	$1200.00
0550 10169	FENCING, TYPE A, 10.1-12.0', SPECIAL FEATURES	LF	25	$60.00	$1500.00
0550 10210	FENCING, TYPE B, 0.0-5.0', STANDARD FEATURES	LF	25	$30.00	$750.00
0550 10212	FENCING, TYPE B, 0.5-5.0', W/ VINYL COATING	LF	25	$25.00	$625.00
0550 10218	FENCING, TYPE B, 0.0-5.0', RESET EXISTING	LF	25	$27.50	$687.50
0550 10219	FENCING, TYPE B, 0.0-5.0', SPECIAL FEATURES	LF	25	$32.00	$800.00
0550 10220	FENCING, TYPE B, 5.1-6.0', STANDARD	LF	25	$25.00	$625.00
0550 10221	FENCING, TYPE B, 5.1-6.0', W/ BARB WIRE ATTMT	LF	25	$35.00	$875.00
0550 10222	FENCING, TYPE B, 5.1-6.0, W/ VINYL COATING	LF	25	$30.00	$750.00
0550 10228	FENCING, TYPE B, 5.1-6.0, RESET EXISTING	LF	25	$22.50	$562.50
0550 10229	FENCING, TYPE B, 5.1-6.0, SPECIAL FEATURES	LF	25	$25.00	$625.00
0550 10230	FENCING, TYPE B, 6.1-7.0', STANDARD	LF	25	$30.00	$750.00
0550 10231	FENCING, TYPE B, 6.1-7.0, W/ BARB WIRE ATTMT	LF	25	$37.00	$925.00
0550 10232	FENCING, TYPE B, 6.1-7.0, W/ VINYL COATING	LF	25	$30.00	$750.00
0550 10238	FENCING, TYPE B, 6.1-7.0, RESET EXISTING	LF	25	$20.00	$500.00
0550 10240	FENCING, TYPE B, 7.1-8.0', STANDARD	LF	25	$40.00	$1000.00
0550 10242	FENCING, TYPE B, 7.1-8.0', VINYL COATING	LF	25	$42.00	$1050.00
0550 10248	FENCING, TYPE B, 7.1-8.0, RESET EXISTING	LF	25	$33.00	$825.00
0550 10250	FENCING, TYPE B, 8.1-10.0', STANDARD FEATURES	LF	25	$27.00	$675.00

0550 10251	FENCING, TYPE B, 8.1-10.0', WITH BARBED WIRE ATTMT	LF	25	$40.00	$1000.00
0550 10252	FENCING, TYPE B, 8.1-10.0', VINYL COATING	LF	25	$42.00	$1050.00
0550 10256	FENCING, TYPE B, 8-10.0', WITH VINYL COATING AND BARBED WIRE ATTACHMENT	LF	25	$42.00	$1050.00
0550 10258	FENCING, TYPE B, 8.1-10.0', RESET EXISTING FENCE	LF	25	$36.00	$900.00
0550 10259	FENCING, TYPE B, 8.1-10.0', SPECIAL	LF	25	$45.00	$1125.00
0550 10266	FENCING, TYPE B, 10.1-12.0', WITH VINYL COATING AND BARBED WIRE ATTACHMENT	LF	25	$48.00	$1200.00
0550 10315	FENCING, TYPE R, 0-5.0', VERTICAL	LF	25	$145.00	$3625.00
0550 10325	FENCING, TYPE R, 5.1-6.0', VERTICAL	LF	25	$115.00	$2875.00
0550 10335	FENCING, TYPE R, 6.1-7.0', VERTICAL	LF	25	$115.00	$2875.00
0550 10343	FENCING, TYPE R, 7.1-8.0, W/FULL ENCLOSURE	LF	25	$350.00	$8750.00
0550 10344	FENCING, TYPE R, 7.1-8.0, W / PARTIAL ENCLOSURE	LF	25	$175.00	$4375.00
0550 10353	FENCING, TYPE R, 8.1 - 10.0', WITH FULL ENCLOSURE	LF	25	$400.00	$10000.00
0550 10354	FENCING, TYPE R, 8.1-10.0', WITH PARTIAL ENCLOSURE, TYPE R ONLY	LF	25	$250.00	$6250.00
0550 10355	FENCING, TYPE R, 8.1-10.0', VERTICAL	LF	25	$225.00	$5625.00
0550 10363	FENCING, TYPE R, GREATER THAN 10.0', WITH FULL ENCLOSURE	LF	25	$240.00	$6000.00
0570 1 2	PERFORMANCE TURF, SOD	SY	1500	$13.00	$19500.00
0571 1 11	PLASTIC EROSION MAT, TURF REINFORCED MAT, TYPE 1	SY	100	$10.00	$1000.00
0571 1 12	PLASTIC EROSION MAT, TRM, TYPE 2	SY	100	$10.00	$1000.00
0571 1 13	PLASTIC EROSION MAT, TURF REINFORCED MAT, TYPE 3	SY	100	$10.00	$1000.00
0591 1 2	4" LANDSCAPE SLEEVE (UNDERGROUND)	LF	50	$50.00	$2500.00
0591 1 2A	4" LANDSCAPE SLEEVE (BORED)	LF	50	$150.00	$7500.00
0630 2 11	CONDUIT, FURNISH & INSTALL, OPEN TRENCH	LF	1000	$55.00	$55000.00
0630 2 12	CONDUIT, FURNISH & INSTALL, DIRECTIONAL BORE	LF	1000	$80.00	$80000.00
0630 2 14	CONDUIT, FURNISH & INSTALL, ABOVEGROUND	LF	1000	$70.00	$70000.00
0630 2 15	CONDUIT, FURNISH & INSTALL, BRIDGE MOUNT	LF	100	$70.00	$7000.00
0630 2 65	CONDUIT, REMOVE, BRIDGE MOUNT	LF	100	$15.00	$1500.00
0654 001	RECTANGULAR RAPID FLASHING BEACON ASSEMBLY	EA	2	$25,000.00	$50000.00
0660 2101	LOOP ASSEMBLY- F&I, TYPE A	AS	20	$3,500.00	$70000.00
0660 2102	LOOP ASSEMBLY, F&I, TYPE B	AS	20	$3,500.00	$70000.00

0660 2103	LOOP ASSEMBLY, F&I, TYPE C	AS	20	$3,500.00	$70000.00
0660 2104	LOOP ASSEMBLY, F&I, TYPE D	AS	20	$3,500.00	$70000.00
0660 2105	LOOP ASSEMBLY, F&I, TYPE E	AS	20	$3,500.00	$70000.00
0660 2106	LOOP ASSEMBLY, F&I, TYPE F	AS	20	$3,500.00	$70000.00
0660 2107	LOOP ASSEMBLY, F&I, TYPE G	AS	20	$3,500.00	$70000.00
0660 3 11	VEHICLE DETECTION SYSTEM- MICROWAVE, FURNISH & INSTALL CABINET EQUIPMENT	EA	5	$15,000.00	$75000.00
0660 3 12	VEHICLE DETECTION SYSTEM- MICROWAVE, FURNISH & INSTALL, ABOVE GROUND EQUIPMENT	EA	5	$20,000.00	$100000.00
0700 1 11	SINGLE POST SIGN, F&I GROUND MOUNT, UP TO 12 SF	AS	50	$500.00	$25000.00
0700 1 12	SINGLE POST SIGN, F&I GROUND MOUNT, 12-20 SF	AS	20	$1,750.00	$35000.00
0700 1 13	SINGLE POST SIGN, F&I GROUND MOUNT, 21-30 SF	AS	5	$2,250.00	$11250.00
0700 1 14	SINGLE POST SIGN, F&I GROUND MOUNT, 31+ SF	AS	5	$2,500.00	$12500.00
0700 1 18	SINGLE POST SIGN, F&I GROUND MOUNT, IN-STREET FLEXIBLE POST	AS	5	$1,500.00	$7500.00
0700 1 21	SINGLE POST SIGN, F&I BARRIER MOUNT INDEX 11871 UP TO 12 SF	AS	5	$425.00	$2125.00
0700 1 22	SINGLE POST SIGN, F&I BARRIER MOUNT INDEX 11871 12-20 SF	AS	5	$675.00	$3375.00
0700 1 23	SINGLE POST SIGN, F&I BARRIER MOUNT INDEX 11871, 21-30 SF SHEETING AREA- BACK TO BACK	AS	5	$1,750.00	$8750.00
0700 1 31	SINGLE POST SIGN, F&I BRIDGE MOUNT INDEX 11870, UP TO 12 SF	AS	5	$1,150.00	$5750.00
0700 1 32	SINGLE POST SIGN, F&I BRIDGE MOUNT INDEX 11870, 12-20 SF	AS	5	$1,750.00	$8750.00
0700 1 33	SINGLE POST SIGN, F&I BRIDGE MOUNT INDEX 11870, 21-30 SF	AS	5	$2,650.00	$13250.00
0700 1 40	SINGLE POST SIGN, INSTALL	AS	5	$200.00	$1000.00
0700 1 50	SINGLE POST SIGN, RELOCATE	AS	10	$350.00	$3500.00
0700 1 60	SINGLE POST SIGN, REMOVE	AS	50	$75.00	$3750.00
0700 1 74	SINGLE POST SIGN, F&I CUSTOM, 31+ SF	AS	5	$4,200.00	$21000.00
0700 2 11	MULTI- POST SIGN, F&I GROUND MOUNT, UP TO 12 SF	AS	5	$3,750.00	$18750.00
0700 2 12	MULTI- POST SIGN, F&I GROUND MOUNT, 12-20 SF	AS	5	$4,450.00	$22250.00
0700 2 13	MULTI- POST SIGN, F&I GROUND MOUNT, 21-30 SF	AS	5	$5,150.00	$25750.00
0700 2 14	MULTI- POST SIGN, F&I GROUND MOUNT, 31-50 SF	AS	5	$6,000.00	$30000.00
0700 2 15	MULTI- POST SIGN, F&I GROUND MOUNT, 51-100 SF	AS	5	$7,500.00	$37500.00
0700 2 16	MULTI- POST SIGN, F&I GROUND MOUNT, 101-200 SF	AS	5	$15,000.00	$75000.00
0700 2 40	MULTI- POST SIGN, INSTALL	AS	5	$500.00	$2500.00

0700 2 50	MULTI- POST SIGN, F&I GROUND MOUNT, RELOCATE	AS	5	$5,000.00	$25000.00
0700 2 60	MULTI- POST SIGN, F&I GROUND MOUNT, REMOVE	AS	5	$1,100.00	$5500.00
0700 2 80	MULTI- POST SIGN, F&I GROUND MOUNT, REPAIR	AS	5	$1,550.00	$7750.00
0700 3101	SIGN PANEL, FURNISH & INSTALL GROUND MOUNT, UP TO 12 SF	EA	5	$500.00	$2500.00
0700 3102	SIGN PANEL, FURNISH & INSTALL GROUND MOUNT, 12-20 SF	EA	5	$650.00	$3250.00
0700 3103	SIGN PANEL, FURNISH & INSTALL GROUND MOUNT, 21-30 SF	EA	5	$1,500.00	$7500.00
0700 3104	SIGN PANEL, FURNISH & INSTALL GROUND MOUNT, 31-50 SF	EA	5	$2,500.00	$12500.00
0700 3105	SIGN PANEL, FURNISH & INSTALL GROUND MOUNT, 51-100 SF	EA	5	$3,100.00	$15500.00
0700 3106	SIGN PANEL, FURNISH & INSTALL GROUND MOUNT, 101-200 SF	EA	5	$4,000.00	$20000.00
0700 3201	SIGN PANEL, FURNISH & INSTALL OVERHEAD MOUNT, UP TO 12 SF	EA	5	$1,750.00	$8750.00
0700 3202	SIGN PANEL, FURNISH & INSTALL OVERHEAD MOUNT, 12-20 SF	EA	5	$2,250.00	$11250.00
0700 3203	SIGN PANEL, FURNISH & INSTALL OVERHEAD MOUNT, 21-30 SF	EA	5	$4,500.00	$22500.00
0700 3204	SIGN PANEL, FURNISH & INSTALL OVERHEAD MOUNT, 31-50 SF	EA	5	$7,200.00	$36000.00
0700 3205	SIGN PANEL, FURNISH & INSTALL OVERHEAD MOUNT, 51-100 SF	EA	5	$10,200.00	$51000.00
0700 3206	SIGN PANEL, FURNISH & INSTALL OVERHEAD MOUNT, 101-200 SF	EA	5	$16,000.00	$80000.00
0700 3401	SIGN PANEL, INSTALL, UP TO 12 SF	EA	5	$350.00	$1750.00
0700 3402	SIGN PANEL, INSTALL, 12-20 SF	EA	5	$750.00	$3750.00
0700 3403	SIGN PANEL, INSTALL, 21-30 SF,	EA	5	$1,150.00	$5750.00
0700 3404	SIGN PANEL, INSTALL, 31-50 SF	EA	5	$1,250.00	$6250.00
0700 3405	SIGN PANEL, INSTALL, 51-100 SF,	EA	5	$1,500.00	$7500.00
0700 3406	SIGN PANEL, INSTALL, 101-200 SF	EA	5	$2,500.00	$12500.00
0700 3501	SIGN PANEL, RELOCATE, UP TO 12 SF	EA	5	$250.00	$1250.00
0700 3502	SIGN PANEL, RELOCATE, 12-20 SF	EA	5	$350.00	$1750.00
0700 3503	SIGN PANEL, RELOCATE, 21-30 SF	EA	5	$750.00	$3750.00
0700 3504	SIGN PANEL, RELOCATE, 31-50 SF	EA	5	$1,150.00	$5750.00
0700 3505	SIGN PANEL, RELOCATE, 51-100 SF	EA	5	$1,500.00	$7500.00
0700 3506	SIGN PANEL, RELOCATE, 101-200 SF	EA	5	$1,650.00	$8250.00
0700 3601	SIGN PANEL, REMOVE, UP TO 12 SF	EA	5	$100.00	$500.00
0700 3602	SIGN PANEL, REMOVE, 12-20 SF	EA	5	$125.00	$625.00

0700 3603	SIGN PANEL, REMOVE, 21-30 SF	EA	5	$300.00	$1500.00
0700 3604	SIGN PANEL, REMOVE, 31-50 SF	EA	5	$350.00	$1750.00
0700 3605	SIGN PANEL, REMOVE, 51-100 SF	EA	5	$750.00	$3750.00
0700 3606	SIGN PANEL, REMOVE, 101-200 SF	EA	5	$1,000.00	$5000.00
0700 3624	SIGN PANEL, REMOVE, UP TO 50 SF WITH LIGHTING	EA	5	$1,000.00	$5000.00
0700 3625	SIGN PANEL, REMOVE, 51-100 SF WITH LIGHTING	EA	5	$2,000.00	$10000.00
0700 3626	SIGN PANEL, REMOVE, 101-200 SF WITH LIGHTING	EA	5	$3,000.00	$15000.00
0700 12 11	SIGN BEACON, F&I GROUND MOUNT- AC POWERED, ONE BEACON	AS	5	$5,250.00	$26250.00
0700 12 12	SIGN BEACON, F&I GROUND MOUNT- AC POWERED, TWO BEACONS	AS	5	$5,500.00	$27500.00
0700 12 21	SIGN BEACON, F&I GROUND MOUNT- SOLAR POWERED, ONE BEACON	AS	5	$7,500.00	$37500.00
0700 12 22	SIGN BEACON, F&I GROUND MOUNT- SOLAR POWERED, TWO BEACONS	AS	5	$8,500.00	$42500.00
0700 12 31	SIGN BEACON, F&I OVERHEAD MOUNT, ONE BEACON	AS	5	$750.00	$3750.00
0700 12 32	SIGN BEACON, F&I OVERHEAD MOUNT, TWO BEACONS	AS	5	$950.00	$4750.00
0700 12 50	SIGN BEACON, RELOCATE BEACON- SIGN TO REMAIN	AS	5	$1,750.00	$8750.00
0700 12 60	SIGN BEACON, REMOVE BEACON- SIGN TO REMAIN	AS	5	$1,000.00	$5000.00
0700 13 10	RETROREFLECTIVE SIGN STRIP- BACK OF RAIL ROAD CROSSBUCK SIGN BLADES	EA	5	$125.00	$625.00
0700 13 12	RETROREFLECTIVE SIGN STRIP- FURNISH AND INSTALL, 2'	EA	5	$150.00	$750.00
0700 13 15	RETROREFLECTIVE SIGN STRIP- FURNISH AND INSTALL, 5'	EA	5	$175.00	$875.00
0701 17101	PROFILED THERMOPLASTIC,STANDARD- CONCRETE SURFACES, WHITE, SOLID,6"	GM	1	$7,350.00	$7350.00
0701 17201	PROFILED THERMOPLASTIC,STANDARD- CONCRETE SURFACES, YELLOW, SOLID,6"	GM	1	$7,300.00	$7300.00
0701 17221	PROFILED THERMOPLASTIC,STANDARD- CONCRETE SURFACES, YELLOW, SKIP,6"	GM	1	$4,100.00	$4100.00
0701 18101	PROFILED THERMOPLASTIC,STANDARD- ASPHALT SURFACES, WHITE, SOLID,6"	GM	1	$6,625.00	$6625.00
0701 18201	PROFILED THERMOPLASTIC,STANDARD- ASPHALT SURFACES, YELLOW, SOLID,6"	GM	1	$6,785.00	$6785.00
0701 18221	PROFILED THERMOPLASTIC,STANDARD- ASPHALT SURFACES, YELLOW, SKIP,6"	GM	1	$2,775.00	$2775.00
0705 10 1	OBJECT MARKER, TYPE 1	EA	5	$230.00	$1150.00
0705 10 2	OBJECT MARKER, TYPE 2	EA	5	$175.00	$875.00
0705 10 3	OBJECT MARKER, TYPE 3	EA	5	$210.00	$1050.00
0705 10 4	OBJECT MARKER, TYPE 4	EA	5	$210.00	$1050.00
0705 11 1	DELINEATOR, FLEXIBLE TUBULAR	EA	50	$67.50	$3375.00

0705 11 2	DELINEATOR, NON-FLEXIBLE	EA	5	$84.00	$420.00
0705 11 3	DELINEATOR, FLEXIBLE HIGH VISABILITY MEDIAN	EA	5	$205.00	$1025.00
0705 11 4	DELINEATOR, FLEXIBLE HIGH PERFORMANCE	EA	5	$130.00	$650.00
0706 1 3	RAISED PAVEMENT MARKER, TYPE B	EA	200	$20.00	$4000.00
0710 90	PAINTED PAVEMENT MARKINGS, FINAL SURFACE	LS	5	$15,000.00	$75000.00
0710 11101	PAINTED PAVEMENT MARKINGS, STANDARD, WHITE, SOLID, 6"	GM	1	$1,300.00	$1300.00
0710 11102	PAINTED PAVEMENT MARKINGS, STANDARD, WHITE, SOLID FOR INTERCHANGE AND URBAN ISLAND, 8"	GM	1	$1,900.00	$1900.00
0710 11103	PAINTED PAVEMENT MARKINGS, STANDARD, WHITE, SOLID FOR INTERCHANGE MARKINGS, 12"	GM	1	$2,325.00	$2325.00
0710 11123	PAINTED PAVEMENT MARKINGS, STANDARD, WHITE, SOLID, 12"	LF	3000	$2.00	$6000.00
0710 11124	PAINTED PAVEMENT MARKINGS, STANDARD, WHITE, SOLID, 18"	LF	2000	$3.00	$6000.00
0710 11125	PAINTED PAVEMENT MARKINGS, STANDARD, WHITE, SOLID, 24"	LF	2000	$4.00	$8000.00
0710 11131	PAINTED PAVEMENT MARKINGS, STANDARD, WHITE, SKIP, 10-30 OR 3-9 SKIP, 6" WIDE	GM	1	$650.00	$650.00
0710 11133	PAINTED PAVEMENT MARKING, STANDARD,WHITE, 3'-9' SKIP DROP LINE AND APPROACH TO TOLL PLAZA, 12" WIDE,	GM	1	$1,100.00	$1100.00
0710 11141	PAINTED PAVEMENT MARKINGS, STANDARD, WHITE, 2-4 DOTTED GUIDELINE/ 6-10 DOTTED EXTENSION, 6"	GM	1	$775.00	$775.00
0710 11160	PAINTED PAVEMENT MARKINGS, STANDARD, WHITE, MESSAGE	EA	25	$65.00	$1625.00
0710 11170	PAINTED PAVEMENT MARKINGS, STANDARD, WHITE, ARROWS	EA	25	$40.00	$1000.00
0710 11180	PAINTED PAVEMENT MARKINGS, STANDARD, WHITE, YIELD LINE	LF	500	$3.50	$1750.00
0710 11190	PAINTED PAVEMENT MARKINGS, STANDARD, WHITE, ISLAND NOSE	SF	100	$3.25	$325.00
0710 11201	PAINTED PAVEMENT MARKINGS, STANDARD, YELLOW, SOLID, 6"	GM	1	$1,500.00	$1500.00
0710 11202	PAINTED PAVEMENT MARKINGS, STANDARD, YELLOW, SOLID FOR INTERCHANGE AND URBAN ISLAND, 8"	GM	1	$2,000.00	$2000.00
0710 11203	PAINTED PAVEMENT MARKINGS, STANDARD, YELLOW, SOLID, 12"	GM	1	$6,800.00	$6800.00
0710 11223	PAINTED PAVEMENT MARKINGS, STANDARD, YELLOW, SOLID, 12"	LF	100	$7.50	$750.00
0710 11224	PAINTED PAVEMENT MARKINGS, STANDARD, YELLOW, SOLID, 18"	LF	300	$1.50	$450.00
0710 11225	PAINTED PAVEMENT MARKINGS, STANDARD, YELLOW, SOLID, 24"	LF	100	$7.50	$750.00
0710 11231	PAINTED PAVEMENT MARKINGS, STANDARD, YELLOW, SKIP, 6"	GM	1	$605.00	$605.00
0710 11241	PAINTED PAVEMENT MARKINGS, STANDARD, YELLOW, 2-4 DOTTED GUIDELINE/6-10 DOTTED EXTENSION, 6"	GM	1	$1,000.00	$1000.00
0710 11290	PAINTED PAVEMENT MARKINGS, STANDARD, YELLOW, ISLAND NOSE	SF	100	$4.00	$400.00
0710 11331	PAINTED PAVEMENT MARKINGS, STANDARD,BLACK, SKIP, 6"	GM	1	$775.00	$775.00
0710 11333	PAINTED PAVEMENT MARKING, STANDARD, BLACK, 3'-9' DOTTED LANE DROP AND APPROACH TO TOLL PLAZA, 12"	GM	1	$6,500.00	$6500.00

0710 11341	PAINTED PAVEMENT MARKINGS, STANDARD, BLACK, 2-4 DOTTED GUIDELINE/ 6-10 DOTTED EXTENSION, 6"	GM	1	$6,750.00	$6750.00
0710 11421	PAINTED PAVEMENT MARKINGS, STANDARD, BLUE, SOLID FOR PARKING LOT- ACCESSIBLE MARKINGS, 6"	LF	100	$7.00	$700.00
0710 12231	PAINTED PAVEMENT MARKINGS, DURABLE, YELLOW, SKIP, 6"	GM	1	$1,200.00	$1200.00
0710 12421	PAINTED PAVEMENT MARKINGS, DURABLE, BLUE, SOLID FOR PARKING LOT-ACCESSIBLE MARKINGS, 6"	LF	100	$12.00	$1200.00
0711 11102	THERMOPLASTIC, STANDARD, WHITE, SOLID, 8" FOR INTERCHANGE AND URBAN ISLAND	GM	1	$8,500.00	$8500.00
0711 11103	THERMOPLASTIC, STANDARD, WHITE, SOLID, 12" FOR INTERCHANGE MARKINGS	GM	1	$12,500.00	$12500.00
0711 11123	THERMOPLASTIC, STANDARD, WHITE, SOLID, 12" FOR CROSSWALK AND ROUNDABOUT	LF	2500	$4.00	$10000.00
0711 11124	THERMOPLASTIC, STANDARD, WHITE, SOLID, 18" FOR DIAGONALS AND CHEVRONS	LF	500	$8.00	$4000.00
0711 11125	THERMOPLASTIC, STANDARD, WHITE, SOLID, 24" FOR STOP LINE AND CROSSWALK	LF	1500	$12.00	$18000.00
0711 11130	THERMOPLASTIC, STANDARD, WHITE, VERTICAL DEFLECTION MARKING	EA	10	$15.00	$150.00
0711 11140	THERMOPLASTIC, STANDARD, WHITE, VERTICAL DEFLECTION ADVANCED WARNING MARKING	EA	10	$500.00	$5000.00
0711 11141	THERMOPLASTIC, STANDARD, WHITE, 2-4 DOTTED GUIDELINE/ 6-10 GAP EXTENSION, 6"	GM	1	$2,850.00	$2850.00
0711 11143	THERMOPLASTIC, STANDARD, WHITE, 2-4 DOTTED GUIDELINE, 12" FOR ROUNDABOUT	GM	1	$6,500.00	$6500.00
0711 11160	THERMOPLASTIC, STANDARD, WHITE, MESSAGE OR SYMBOL	EA	20	$225.00	$4500.00
0711 11170	THERMOPLASTIC, STANDARD, WHITE, ARROW	EA	20	$200.00	$4000.00
0711 11180	THERMOPLASTIC, STANDARD, WHITE, YIELD LINE	LF	250	$12.00	$3000.00
0711 11224	THERMOPLASTIC, STANDARD, YELLOW, SOLID, 18" FOR DIAGONAL OR CHEVRON	LF	250	$8.00	$2000.00
0711 11241	THERMOPLASTIC, STANDARD, YELLOW, 2-4 DOTTED GUIDE LINE /6-10 DOTTED EXTENSION LINE, 6"	GM	1	$3,200.00	$3200.00
0711 11421	THERMOPLASTIC, STANDARD, BLUE, SOLID,6"	LF	100	$8.00	$800.00
0711 14123	THERMOPLASTIC, PREFORMED, WHITE, SOLID, 12"	LF	1000	$10.00	$10000.00
0711 14125	THERMOPLASTIC, PREFORMED, WHITE, SOLID, 24"	LF	1000	$24.00	$24000.00
0711 14141	THERMOPLASTIC, PREFORMED, WHITE, 2-4 DOTTED GUIDELINE ON CONCRETE SURFACES	GM	1	$1,250.00	$1250.00
0711 14160	THERMOPLASTIC, PREFORMED, WHITE, MESSAGE	EA	5	$350.00	$1750.00
0711 14170	THERMOPLASTIC, PREFORMED, WHITE, ARROWS	EA	20	$250.00	$5000.00
0711 14191	THERMOPLASTIC, PREFORMED, 6" WHITE, RAILROAD DYNAMIC ENVELOPE	LF	100	$20.00	$2000.00
0711 14193	THERMOPLASTIC, PREFORMED, 12" WHITE ON ASPHALT PAVEMENT, RAILROAD DYNAMIC ENVELOPE	LF	250	$20.00	$5000.00
0711 14194	THERMOPLASTIC, PREFORMED, 12" WHITE WITH 4" OUTSIDE BLACK CONTRAST ON CONCRETE PAVEMENT, RAILROAD DYNAMIC ENVELOPE	LF	100	$30.00	$3000.00
0711 14341	THERMOPLASTIC, PREFORMED, BLACK, 2-4 DOTTED GUIDELINE ON CONCRETE SURFACES	GM	1	$17,500.00	$17500.00
0711 14560	THERMOPLASTIC, PREFORMED, WHITE WITH BLACK CONTRAST ON CONCRETE PAVEMENT, MESSAGE OR SYMBOL	EA	5	$1,500.00	$7500.00

0711 14570	THERMOPLASTIC, PREFORMED, WHITE WITH BLACK CONTRAST, ARROW ON CONCRETE SURFACE	EA	5	$1,000.00	$5000.00
0711 15101	THERMOPLASTIC, STANDARD-OPEN GRADED ASPHALT SURFACES WHITE, SOLID, 6"	GM	1	$6,000.00	$6000.00
0711 15102	THERMOPLASTIC, STANDARD-OPEN GRADED ASPHALT SURFACES, WHITE, SOLID, 8"	GM	1	$8,000.00	$8000.00
0711 15131	THERMOPLASTIC, STANDARD-OPEN GRADED ASPHALT SURFACES, WHITE, SKIP, 6",10-30 SKIP OR 3-9 LANE DROP	GM	1	$2,250.00	$2250.00
0711 15133	THERMOPLASTIC, STANDARD-OPEN GRADED ASPHALT SURFACES, WHITE, SKIP, 12"- APPROACH TO TOLL PLAZA OR 3-9 LANE DROP	GM	1	$3,750.00	$3750.00
0711 15201	THERMOPLASTIC, STANDARD-OPEN GRADED ASPHALT SURFACES, YELLOW, SOLID, 6"	GM	1	$5,800.00	$5800.00
0711 15202	THERMOPLASTIC, STANDARD-OPEN GRADED ASPHALT SURFACES YELLOW, SOLID, 8"	GM	1	$8,000.00	$8000.00
0711 15231	THERMOPLASTIC, STANDARD-OPEN GRADED ASPHALT SURFACES, YELLOW, SKIP, 6"	GM	1	$2,500.00	$2500.00
0711 16101	THERMOPLASTIC, STANDARD-OTHER SURFACES, WHITE, SOLID, 6"	GM	3	$5,600.00	$16800.00
0711 16102	THERMOPLASTIC, STANDARD-OTHER SURFACES, WHITE, SOLID, 8"	GM	1	$7,500.00	$7500.00
0711 16131	THERMOPLASTIC, OTHER SURFACES, WHITE, SKIP, 6",10-30 SKIP OR 3-9 LANE DROP	GM	1	$2,250.00	$2250.00
0711 16133	THERMOPLASTIC, STANDARD-OTHER SURFACES WHITE, SKIP, 12"- APPROACH TO TOLL PLAZA OR 3-9 LANE DROP	GM	1	$4,250.00	$4250.00
0711 16201	THERMOPLASTIC, STANDARD-OTHER SURFACES, YELLOW, SOLID, 6"	GM	3	$5,500.00	$16500.00
0711 16202	THERMOPLASTIC, STANDARD-OTHER SURFACES, YELLOW, SOLID, 8"	GM	1	$9,250.00	$9250.00
0711 16231	THERMOPLASTIC, STANDARD-OTHER SURFACES, YELLOW, SKIP, 6"	GM	1	$2,200.00	$2200.00
0711 17	THERMOPLASTIC, REMOVE EXISTING THERMOPLASTIC PAVEMENT MARKINGS: NON-CONFLICTING ONLY	SF	500	$10.00	$5000.00
0711 12131	THERMOPLASTIC, REFURBISHMENT, WHITE, SKIP, 6"	GM	1	$1,600.00	$1600.00
0711 12160	THERMOPLASTIC, REFURBISH, WHITE, MESSAGE	EA	5	$375.00	$1875.00
0711 12170	THERMOPLASTIC, REFURBISH, WHITE, ARROWS	EA	5	$200.00	$1000.00
0711 12231	THERMOPLASTIC, REFURBISHMENT, YELLOW, SKIP, 6"	GM	1	$6,650.00	$6650.00
713103101	PERMANENT TAPE, WHITE, SOLID, 6" FOR CONCRETE BRIDGES	GM	1	$32,500.00	$32500.00
713103102	PERMANENT TAPE, WHITE, SOLID, 8" EXIT LANE AT INTERCHANGE ON CONCRETE PAVEMENT	GM	1	$35,000.00	$35000.00
713103103	PERMANENT TAPE, WHITE, SOLID DROP LANE MARKING, 12" FOR CONCRETE BRIDGES,	GM	1	$48,500.00	$48500.00
713103131	PERMANENT TAPE, WHITE, SKIP/DOTTED, 6" FOR CONCRETE SURFACES	GM	1	$10,000.00	$10000.00
713103133	PERMANENT TAPE, WHITE, SKIP, 12" WIDE 3'-9' DROP LANE ON CONCRETE SURFACES	GM	1	$21,500.00	$21500.00
713103201	PERMANENT TAPE, YELLOW, SOLID, 6" FOR CONCRETE BRIDGES	GM	1	$31,500.00	$31500.00
713103231	PERMANENT TAPE, YELLOW, 10-30 SKIP/ 3-9 DOTTED, 6" FOR CONCRETE SURFACES	GM	1	$15,500.00	$15500.00
713103331	PERMANENT TAPE, BLACK, SKIP/DOTTED, 6" FOR CONCRETE SURFACES	GM	1	$10,500.00	$10500.00
713103333	PERMANENT TAPE, BLACK, 3'-9' DROP LANE, 12" ON CONCRETE SURFACES	GM	1	$17,500.00	$17500.00

713107	PREFORMED/PERMANENT TAPE, REMOVE	SF	50	$20.00	$1000.00
400143	CLEANING & COATING CONCRETE SURFACE, CLASS 5	SF	5	$100.00	$500.00
906-173-7	SINGLE COMPONENT POLYURETHANE INJECTION	GAL	500	$50.00	$25000.00
906-173-8	TWO COMPONENT POLYURETHANE INJECTION	LB	10000	$15.00	$150000.00
MISCELLANEOUS LABOR, EQUIPMENT, MATERIAL, AND SUB-CONTRACTOR ITEMS					
	LABOR - FOREMAN	HR	1	$145.00	$145.00
	LABOR - OPERATOR	HR	1	$75.00	$75.00
	LABOR - TRUCK DRIVER	HR	1	$65.00	$65.00
	LABOR - PIPE LAYERS (FOR PIPES < 48" DIA.)	HR	1	$60.00	$60.00
	LABOR - LABORER	HR	1	$55.00	$55.00
	EQUIPMENT - FOREMAN P/U WITH HAND TOOLS	HR	1	$50.00	$50.00
	EQUIPMENT - JOB TRUCK WITH MANDATORY TOOLS*	HR	1	$150.00	$150.00
	EQUIPMENT - CRANE (20 TON)	HR	1	$250.00	$250.00
	EQUIPMENT - CRANE (60 TON)	HR	1	$400.00	$400.00
	EQUIPMENT - TRACTOR & TRAILER (TRANSPORT)	HR	1	$150.00	$150.00
	EQUIPMENT - TRACK HOE (TO 100 HP)	HR	1	$175.00	$175.00
	EQUIPMENT - TRACK HOE (101 HP TO 170 HP)	HR	1	$250.00	$250.00
	EQUIPMENT - RUBBER TIRED BACKHOE	HR	1	$175.00	$175.00
	EQUIPMENT - WHEEL LOADER (TO 150 HP)	HR	1	$150.00	$150.00
	EQUIPMENT - WHEEL LOADER (151 HP AND UP)	HR	1	$200.00	$200.00
	EQUIPMENT - TRACK TYPE TRACTORS (TO 100 HP)	HR	1	$150.00	$150.00
	EQUIPMENT - TRACK TYPE TRACTORS (101 HP AND UP)	HR	1	$200.00	$200.00
	EQUIPMENT - DUMP TRUCK (TANDEM AXLE)	HR	1	$250.00	$250.00
	EQUIPMENT - PLATE TAMP	HR	1	$75.00	$75.00
	EQUIPMENT - 3" TRASH PUMP	HR	1	$65.00	$65.00
	EQUIPMENT - 4" DOUBLE DIAPHRAGM PUMP	HR	1	$85.00	$85.00
	EQUIPMENT - AIR COMPRESSOR (125 SCFM)	HR	1	$50.00	$50.00
	EQUIPMENT - WELL POINT PUMP	HR	1	$100.00	$100.00
	EQUIPMENT - 4" JET PUMP	HR	1	$75.00	$75.00
	MATERIAL - 2500 PSI CONCRETE (UN-FORMED)	CY	1	$250.00	$250.00
	MATERIAL - OFF SITE SELECT FILL	CY	1	$65.00	$65.00
	MATERIAL - LIMEROCK BASE MATERIAL	TN	1	$100.00	$100.00
	MATERIAL - #57 WASHED STONE	TN	1	$185.00	$185.00
	MATERIAL - ASPHALT PAVING (1.5" THICK; TYPE S-3)	SY	1	$55.00	$55.00
	MATERIAL - BAHIA SOD	SY	1	$15.00	$15.00
	SUB-CONTRACTOR - WELDER WITH TRUCK	HR	1	$250.00	$250.00

	SUB-CONTRACTOR - TRACTOR WITH 7' BUSH HOG	HR	1	$250.00	$250.00

* Contractor Job Truck Mandatory Tools

	Tool	Minimum size	Quantity
1	Air compressor	20 CFM @ 90PSI	1
2	3/4" drive ratchet and socket set		1
3	1 inch drive air impact wrench		1
4	1 inch drive sockets	1-1/2" to 3"	1 each
5	Slug wrenches	1-1/2" to 3"	1
6	End wrenches	7/16" to 1-1/2"	2 each
7	Porta band saw w spare blades	4" opening	1
8	Sawzall w spare blades		1
9	Nylon slings 5,000 and 10,000 pound rated (vertical)	2" 2 ply/4" 2 ply	2 each
10	Grade 80 Chain 10,000 pound rated	1/2" X 10 ft	2
11	Clevis or Shackles 5 ton rated	5/8" alloy	4
12	Porta power 10 ton		1
13	Shovels- round and square point		3 each
14	Cutting torch set *see note*		1
15	Gas or diesel stick welder and accessories *see note*		1
16	Small diaphragm pump and accessories	2" suction	1
17	Tap and die set	1/2" to 2" NPT	1
18	Drill and bits for steel or ductile	1/2" to 2" NPT size	1 set
19	Pry bar	5 foot	1
20	Come along	2ton	2
21	Circular Saw and blades for cribbing/forms	7 1/2 inch	2
22	Generator 120/240 volt	3500 watt	1
23	Framing hammer and nails for forms		2
24	Screw gun and screws for forms and cribbing		1
25	Gas powered cutoff saw (K-12)	12inch	1
26	Chain saw for cribbing and for'ms	14 inch bar	1
27	Sledge hammers	4t/ and 6tl	1 each
28	Crew PPE to include Hard hat and gloves at minimum	as needed	per person

V. REFERENCES & MINIMUM QUALIFICATIONS

Provide at least three (3) or more professional, business references with which you have contracted to provide similar services in the past five (5) years. Include the name of the person, its organization, telephone number, fax number, and e-mail address. Include any governmental agencies, with the same contact and descriptive information for which you have provided similar service within the past five (5) years.

Provide a brief description of the history and capabilities of the firm. Describe the types of projects or services the firm performs/has performed and the dollar value of each. Provide information regarding your firm's ability to complete this project. Demonstrate that the firm's personnel have experience with similar projects.

Identify all unresolved and ongoing claims and disputes against your firm in excess of $500,000. Include any claims against the principals of your firm or any claims your company may have against a third party. Provide a history of litigation, including the outcomes, for the past five (5) years.

The responding firm shall provide a statement of assurance that the firm is not presently in violations of any statutes or regulatory rules that might have an impact on the firm's operations. All applicable laws and regulations of the State of Florida and ordinances and regulations of the City of St. Pete Beach will apply.

Provide the overall bonding capacity for the company and provide a history of any claims against the Proposer's previous bonds for the past five (5) years.

The City shall be the sole final judge of qualifications of Proposer to perform service and reserves the exclusive right to accept or reject any proposal as it deems to be in the best interests of the City. The City reserves the right to make such investigation, as it deems necessary, to determine the ability of any proposer to perform the work or service requested. Failure to comply with the requirements of this section may be grounds for rejecting a response.

6920 Asphalt Avenue, Tampa, FL 33614
www.pcscivilinc.com
813-868-7719

V.REFERENCES & MINIMUM QUALIFICATIONS

Professional References:

Pierre Valles, P.E
Professional Engineer II
Hillsborough County Capital Programs Department / Construction Services
(813) 459-0373
VallesP@hcfl.gov

Samir Ahmed
Senior Project Manager
Hillsborough County Construction Services Group
(813) 904-5403
AhmendS@hcfl.gov

Patrick Blair, P.E, S.I
Vice President of Engineering
Port Tampa Bay
(813) 508-1444
Pblair@tampaport.com

Government Agencies PCS Civil has provided similar Construction Services for:

- Hillsborough County
- Port Tampa Bay
- Florida Department of Transportation
- City of Tampa

6920 Asphalt Avenue, Tampa, FL 33614
www.pcscivilinc.com
813-868-7719

Company History and Capabilities

PCS Civil, LLC is a leader in Heavy Civil Construction services in Florida. Originally known as Pepper Contracting, PCS was incorporated on December 21, 1993, with the mission to set the bar higher for all roadway, utility, and concrete companies in the Tampa Bay area.

From our earliest beginnings our Core Values of Passion, Respect, Integrity, Diversity and Excellence have been the backbone of our company's leadership and employees. Our highly skilled teams have constructed some of the most challenging infrastructure projects in the Tampa Bay area including complex interchanges, urban & rural roadways, underground utilities, bridges, complex drainage systems and concrete structures. Our extensive list of clients includes: FDOT District 1 & 7, Clearwater International Airport, Hillsborough / Pinellas / Pasco Counties, Port Tampa Bay, Tampa International Airport, Port Manatee and many more.

PCS Civil believes that Safety is the highest priority in every aspect of our business. We practice what we preach and create a safe and healthy work environment as part of our dynamic culture and that safety is one of our most central guiding principles. With over 200 full-time employees and staff, PCS maintains an overall total recordable incident rate (TRIR) and overall lost-time frequency rate (FTFR) among the lowest in our industry. PCS's committed to providing our employees with the training, equipment, and practices to achieve our zero accidents goal. The safety of our employees is our highest priority, and we want each employee to leave work and return home safely and healthy each day.

PCS Civil currently operates out of our 7-acre site on Asphalt Ave centrally located in Tampa, FL. This site is complete with an 11,000 SF office space and 9,000 SF equipment maintenance facility with equipment and material staging areas.

PCS is a proud member of the Design Build Institute of America and has successfully completed many design-build projects. We are also members of the Florida Transportation Builders Association and have received multiple FTBA Best in Construction Awards. Our team is also members of NUCA, SUCA and various other construction industry associations.

At PCS, we are proud to be shaping Florida's future. The projects we take on play a continuing role in improving the local communities and improving our shared infrastructure. Our highly successful team of skilled builders, engineers and operational support is responsible for our success and our culture of excellence. We continue to strive to be the best and are committed to excellence in all that we do.

6920 Asphalt Avenue, Tampa, FL 33614
www.pcscivilinc.com
813-868-7719

Comparable Previous Projects

ENTITY NAME	PROJECT NAME	CONTACT PERSON	ORIGINAL CONTRACT AMOUNT	CO's by CMR	CO's by ENGINEER	CO'S by ENTITY	JOB DESCRIPTION	DESIGN ENGINEER	CONTRACT DATE	FINAL CONTRACT AMOUNT	COMPLETED
Hillsborough County BOCC	HILLSBOROUGH COUNTY BOCC:	Pierre Valles, P.E					Work Order contract for repairs to existing storm drainage	Hillsborough County Engineering			
Engineering Services	Miscellaneous Stormwater Construction - Term	Professional Engineer II	$4,642,308.63	N/A	N/A	N/A	system on as-needed basis	601 E. Kennedy Blvd.	5/1/2019	$4,642,308.63	2020
601 E. Kennedy Blvd.	**Contract - East Service Unit Area - ITB 17719,3-**	(813) 459-0373						Tampa, Florida 33602			
Tampa, Florida 33602	Work Order Contract, Various Locations	VallesP@hcfl.gov									
Hillsborough County BOCC	Hillsborough County BOCC:	Pierre Valles, P.E					Work performed under this contract may include, but not	Various			
Attn: Procurement Services Department	Stormwater Culverts Construction Contract	Professional Engineer II	$7,693,461.76				limited to, storm water installation, cross drains, side drains,	The design engineer used was based on the	8/28/2020	$7,693,461.76	2022
P.O. Box 1110	**ITB 19549**	(813) 459-0373		N/A	N/A	N/A	manhole, and inlet structures, and outfall and/or end	specific work order. Information is available			
Tampa, FL 33601		VallesP@hcfl.gov					treatment that may encounter groundwater installation	upon request.			
							within project limits; slip lining of existing storm sewers etc.				
Hillsborough County BOCC	Hillsborough County BOCC:	Pierre Valles, P.E					Work performed under this contract may include, but not	Various			
Attn: Procurement Services Department	Neighborhood Stormwater Construction	Professional Engineer II	$12,364,598.78	N/A	N/A	N/A	limited to, storm water installation, cross drains, side drains,	The design engineer used was based on the	8/28/2020	$12,364,598.78	2024
P.O. Box 1110	**ITB 19613**	(813) 459-0373					manhole, and inlet structures, and outfall and/or end	specific work order. Information is available			
Tampa, FL 33601		VallesP@hcfl.gov					treatment that may encounter groundwater installation	upon request.			
							within project limits; slip lining of existing storm sewers etc.				
Hillsborough County BOCC	Hillsborough County BOCC:	Pierre Valles, P.E					Work performed under this contract may include, but not	Various			
Attn: Procurement Services Department	Stormwater Culverts Construction Contract	Professional Engineer II	$8,093,461.76	N/A	N/A	N/A	limited to, storm water installation, cross drains, side drains,	The design engineer used was based on the	11/1/2021	$8,093,461.76	2024
P.O. Box 1110	**ITB 19549 (YEAR 2)**	(813) 459-0373					manhole, and inlet structures, and outfall and/or end	specific work order. Information is available			
Tampa, FL 33601		VallesP@hcfl.gov					treatment that may encounter groundwater installation	upon request.			
							within project limits; slip lining of existing storm sewers etc.				
Hillsborough County BOCC	Hillsborough County BOCC:	Pierre Valles, P.E					Perform construction and installation of water mains, reclaimed	Various			
Attn: Procurement Services Department	Pipeline Work Order Construction Services	Professional Engineer II	$2,000,000.00	N/A	N/A	N/A	water mains, and wastewater force mains and miscellaneous		10/24/2022	$2,000,000.00	Ongoing
P.O. Box 1110	**ITB 23484 (WORCS-6)**	(813) 459-0373					installations and/or modifications at various water, reclaimed				
Tampa, FL 33601	One Year contract with potential to be extended	VallesP@hcfl.gov					water, and wastewater facilities, pumping stations and				
	to 3 additional 1 year terms						equipment utilized by Hillsborough County Water Resources				
							Department.				
Hillsborough County BOCC	Hillsborough County BOCC:	Pierre Valles, P.E					Ongoing and as needed stormwater culvert construction related	Various			
Attn: Procurement Services Department	Stormwater Culvert Construction (South Region)	Professional Engineer II	$24,225,735.15	N/A	N/A	N/A	services. The contractor shall furnish all labor, materials and		12/1/2022	$24,225,735.15	Ongoing
P.O. Box 1110	**ITB 23316**	(813) 459-0373					equipment for the accomplishment of all work as described in the				
Tampa, FL 33601		VallesP@hcfl.gov					contract documents, specifications, and attachments,				
							as shown on plans…				
Hillsborough County BOCC	Hillsborough County BOCC:	Pierre Valles, P.E					Work Order contract for repairs to existing storm drainage	Various			
Engineering Services	Stormwater Neighbourhood East	Professional Engineer II	$7,966,139.15	N/A	N/A	N/A	system on as-needed basis.	The design engineer used was based on the	12/20/2023	$7,966,139.15	Ongoing
601 E. Kennedy Blvd.	**ITB, 23-24297 FY23**	(813) 459-0373						specific work order. Information is available			
Tampa, Florida 33602		VallesP@hcfl.gov						upon request.			
Hillsborough County BOCC	Hillsborough County BOCC:	Pierre Valles, P.E					Work Order contract for repairs to existing storm drainage	Various			
Engineering Services	Stormwater Neighbourhood West	Professional Engineer II	$8,056,830.00	N/A	N/A	N/A	system on as-needed basis.	The design engineer used was based on the	12/20/2023	$8,056,830.00	Ongoing
601 E. Kennedy Blvd.	**ITB, 23-24298 FY23**	(813) 459-0373						specific work order. Information is available			
Tampa, Florida 33602		VallesP@hcfl.gov						upon request.			
Hillsborough County BOCC	Hillsborough County BOCC:	Pierre Valles, P.E					Work Order contract for repairs to existing storm drainage	Various			
Engineering Services	Stormwater Culvert East	Professional Engineer II	$9,266,560.00	N/A	N/A	N/A	system on as-needed basis.	The design engineer used was based on the	2/7/2024	$9,266,560.00	Ongoing
601 E. Kennedy Blvd.	**ITB, 23-24187 FY23**	(813) 459-0373						specific work order. Information is available			
Tampa, Florida 33602		VallesP@hcfl.gov						upon request.			
Hillsborough County BOCC	Hillsborough County BOCC:	Pierre Valles, P.E					Work Order contract for repairs to existing storm drainage	Various			
Engineering Services	Stormwater Culvert West	Professional Engineer II	$9,376,876.00	N/A	N/A	N/A	system on as-needed basis.	The design engineer used was based on the	5/15/2024	$9,376,876.00	Ongoing
601 E. Kennedy Blvd.	**ITB, 23-24188 FY23**	(813) 459-0373						specific work order. Information is available			
Tampa, Florida 33602		VallesP@hcfl.gov						upon request.			

PCS CIVIL
"Committed to Excellence"

6920 Asphalt Avenue, Tampa, FL 33614
www.pcscivilinc.com
813-868-7719

Statement of Assurance

PCS Civil, LLC Assures that the firm is not presently in violation of any statutes or regulatory rules that would impact the firm's operation. PCS follows all State, Local, and Federal laws and statutes in the performance of their work.

This sworn statement is submitted to: City of St. Pete Beach
by: Douglas J. Ebbers, President
(Print individual's name and title)

for: PCS Civil, LLC
(Print name of entity submitting sworn statement)

6920 Asphalt Ave., Tampa, FL 33614
at: (Business address)

STATE OF FLORIDA
COUNTY OF Hillsborough_____

The foregoing instrument was sworn to (or affirmed), subscribed, and acknowledged before me by means
of ☒ physical presence or ☐ online notarization, this 7th day of April____, 2026,by Douglas J Ebbers_____, who is personally known to me or has produced_____ as identification

_____
Notary Public – State of Florida
Tristan Hine
(Print, Type, Stamp, or Commissioned Name of Notary Public)

TRISTAN HINE
Commission # HH 300450
Expires August 15, 2026

6920 Asphalt Avenue, Tampa, FL 33614
www.pcscivilinc.com
813-868-7719

Current Litigation Summary

April 7th, 2026

PCS Civil, Inc Plaintiff
v.
Wantman Group, Inc. Defendant
David Wantman, Individually

Hillsborough County, Florida
13th District
Case No: 2CA-002033

Description: PCS Civil seeks to recover damages of $1.8M as result Wantman Group's design deficiencies on a $17M FDOT Design Build Project. The case is still in its infancy. PCS Civil was the Prime Contractor and Wantman Group was the Design Engineer under a design subcontract agreement.

PCS Civil, Inc. Plaintiff
v.
Asphalt Paving Systems, Inc. Defendant

Hillsborough County, Florida
13th District
Case No. 2024-CA-000508A

Description: PCS Civil seeks to recover damages of $1M +/- as a result of Asphalt Paving Systems' breach of contract and defaults. PCS Civil was the Prime Contractor and Asphalt Paving Systems was a subcontractor and asphalt supplier.

PCS Civil, LLC Plaintiff
v.
Western Surety Company Defendant

United States District Court
Middle District of Florida
Case No. 5:25-cv-=262

Description: PCS Civil seeks to recover damages of $7M +/= as a result of Western Surety's material breaches of contract on the FDOT T7407 SR 55 (US 19) project. Western Surety defaulted in its contract payments to PCS Civil.

6920 Asphalt Avenue, Tampa, FL 33614
www.pcscivilinc.com
813-868-7719

Bonding Statement

The following page contains PCS Civil's bonding statement. The current company capacity for project bonding is $125 million dollars Aggregate.

PCS Civil has never had a claim against their Performance and Payment Bonds on any project resulting in a monetary loss to the Surety.

March 9, 2026

Florida Department of Transportation
Manager, Contracts Administration Office
605 Suwannee Street, M.S 55
Tallahassee, Florida 32399-0445

Re: **PCS Civil, Inc.**/ Surety Bonding Letter

To Whom it May Concern:

Please be advised that we have been the surety bond agents for the above-mentioned company for the past several years.

We have established a line of credit for **PCS Civil, Inc.** in the $**125,000,000.00** aggregate program. This program is in place through **Markel Insurance Company** who is rated **"A XV"** by A.M. Best and appears on the U.S. Treasury Circular 570 of approved sureties at $298,854,000.

We obviously reserve the right to review final contractual documents, bond forms and obtain satisfactory evidence of funding prior to final commitment to issue bonds, and we cannot assume liability to any third party, including you, if we do not execute said bonds.

Sincerely,



Kevin R. Wojtowicz
Surety Bond Specialist
Attorney-In-Fact for Surety

VI. CONTRACTOR'S PROPOSAL SUBMITTAL

The company that is submitting a proposal declares that it has extensive experience providing Task Work Order driven Civil On-Call Construction Services.

The undersigned, as Proposer, hereby declares that the only person or persons interested in the Proposal as principal or principals are named herein, and that no person other than herein mentioned has any interest in the Proposal or in the Agreement to be entered into; that this Proposal or Agreement is made without connection with any other person, company, or parties making a Proposal; and that it is in all respects fair and in good faith without collusion or fraud.

The Proposer further declares that they have examined the site of the work and informed themselves fully in regard to all conditions pertaining to the place where the work is to be done; that they have examined the Plans and Specifications for the work and Contract Documents relative thereto, and have read all special provisions furnished prior to the opening of proposals; and that they have satisfied themselves relative to the materials to be supplied and work to be performed.

The Proposer proposes and agrees, if the Proposal is accepted, to contract with the City of St. Pete Beach, Florida, in the form of an Agreement specified for **"Civil On Call Construction Services"** in St. Pete Beach, Florida, in full and complete accordance with the shown, noted, described, and reasonably intended requirements of the Plans, Specifications, and Contract Documents, to the full and entire satisfaction of the City of St. Pete Beach, Florida.

The successful Proposer shall be required to utilize the template Agreement in this Request for Proposals (RFP) and any questions regarding the Agreement must be addressed during the RFP process before submittal. The City reserves the right to respond or not respond to questions in the form of an addendum.

The Proposer proposes to furnish all materials, equipment, labor, and perform the work submitted in their proposal schedule for the City of St. Pete Beach **"Civil On Call Construction Services."**

COMPANY: PCS Civil, LLC DATE: 04/07/2026

ADDRESS: 6920 Asphalt Ave. Tampa, FL 33614 PHONE: (813) 868-7719

PROPOSER: _____ NAME: Douglas J. Ebbers, President

(SIGNATURE) (PRINT NAME & TITLE)

STATE OF FLORIDA
COUNTY OF Hillsborough

The foregoing instrument was sworn to (or affirmed), subscribed, and acknowledged before me by means of ☒ physical presence or ☐ online notarization, this 7th day of April, 2026, by Douglas J. Ebbers, who is personally known to me or has produced _____ as identification.

(SEAL)

TRISTAN HINE
Commission # HH 300450
Expires August 15, 2026

_____
Notary Public – State of Florida

Tristan Hine
_____
(Print, Type, Stamp, or Commissioned Name of Notary Public)

SUBMIT PROPOSAL TO: Electronically via Bonfire only

VII. PUBLIC ENTITY CRIMINAL AFFIDAVIT

SWORN STATEMENT – PUBLIC ENTITY CRIMES

PURSUANT TO § 287.133 (3)(a), FLORIDA STATUTES, ON PUBLIC ENTITY CRIMES
THE FORM MUST BE SIGNED AND SWORN TO IN THE PRESENCE OF A NOTARY PUBLIC OR OTHER OFFICIAL AUTHORIZED TO ADMINISTER OATHS.

1. This sworn statement is submitted to: City of St. Pete Beach
by: Douglas J. Ebbers, President
(Print individual's name and title)

for: PCS Civil, LLC
(Print name of entity submitting sworn statement)

at: 6920Asphalt Ave., Tampa, FL 33614
(Business address)

and (if applicable), its Federal Employer Identification Number (FEIN):

59-3221511
(FEIN)
or, if the entity has no FEIN, include the Social Security Number:

(SSN)

by the individual signing this sworn statement:
(Signature)

2. I understand that a "public entity crime" as defined in § 287.133 (1)(g), Fla. Stat., means a violation of any State or Federal law by a person with respect to and directly related to the transaction of business with any public entity or with an agency or political subdivision of any other state or of the United States including, but not limited to, any proposal or contract for goods or services, any lease for real property, or any contract for the construction or repair of a public building or public work, involving antitrust, fraud, theft, bribery, collusion, racketeering, conspiracy, or material misrepresentation.

3. I understand that "convicted" or "conviction" as defined in § 287.133 (1)(b), Fla. Stat., means a finding of guilt or a conviction of public entity crime with or without an adjudication of guilt in any Federal or State trial court of record relating to charges brought by indictment or information after July 1, 1989, as a result of a jury verdict, non-jury trial, or entry of a plea of guilty or nolo contendere.

4. I understand that an "affiliate" as defined in § 287.133 (1)(a), Fla. Stat., means:
   a. A predecessor or successor of a person convicted of a public entity crime or
   b. An entity under the control of any natural person who is active in the management of the entity and who has been convicted of a public entity crime. The term "affiliate" includes those officers, directors, executives, partners, shareholders, employees, members, and agents who are active in the management of an affiliate. The ownership by one (1) person of shares constituting a controlling interest in another person or a pooling of equipment or income among persons when not for fair market value under the arm's length agreement, shall be a prima facie case that one (1) person controls another person. A person who knowingly enters into a joint venture with a person who has been convicted of a public crime in Florida during the preceding thirty-six (36) months shall be considered an affiliate.

5. I understand that a "person" as defined in Section 287.133 (1)(e), Fla. Stat., means any natural person or any entity organized under the laws of any state or of the United States with the legal power to enter into a binding contract and which proposals or applies to proposal on contracts let by a public entity, or which otherwise transacts or applies to transact business with a public entity. The term "person" includes those officers, directors, executives, partners, shareholders, employees, members, and agents who are active in management of an entity.

6. Based on information and belief, the **statement which I have marked below is true** in relation to the entity submitting this sworn statement (indicate which statement applies).

☒ Neither the entity submitting this sworn statement, nor any of its officers, directors, executives, partners, shareholders, employees, members, or agents who are active in the management of the entity nor any affiliate of the entity has been charged with and convicted of a public entity crime subsequent to July 1, 1989.

☐ The entity submitting this sworn statement or one (1) or more of its officers, directors, executives, partners, shareholders, employees, members, or agents who are active in the management of the entity or an affiliate of the entity has been charged with and convicted of a public entity crime subsequent to July 1, 1989.

☐ The entity submitting this sworn statement or one (1) or more of its officers, directors, executives, partners, shareholders, employees, members, or agents who are active in the management of the entity or an affiliate of the entity has been charged with and convicted of a public entity crime subsequent to July 1, 1989. However, there has been a subsequent proceeding before a Hearing Office of the State of Florida, Division of Administrative Hearings and the Final Order entered by the Hearing Officer determined that it was not in the public interest to place the entity submitting this sworn statement on the convicted vendor list (attach a copy of the final order).

I UNDERSTAND THAT THE SUBMISSION OF THIS FORM TO THE CONTRACTING OFFICE FOR THE PUBLIC ENTITY IDENTIFIED IN PARAGRAPH 1 ABOVE IS FOR THE PUBLIC ENTITY ONLY AND THAT THIS FORM IS VALID THROUGH DECEMBER 31 OF THE CALENDAR YEAR IN WHICH IT IS FILED. I ALSO UNDERSTAND THAT I AM REQUIRED TO INFORM THE PUBLIC ENTITY PRIOR TO ENTERING INTO A CONTRACT IN EXCESS OF THE THRESHOLD AMOUNT PROVIDED IN SECTION 287.017, FLORIDA STATUTES, FOR CATEGORY TWO OF ANY CHANGE IN THE INFORMATION CONTAINED IN THIS FORM.

STATE OF FLORIDA
COUNTY OF Hillsborough

The foregoing instrument was sworn to (or affirmed), subscribed, and acknowledged before me by means of ☒ physical presence or ☐ online notarization, this 7th day of April, 2026, by Douglas J. Ebbers, who is personally known to me or has produced _____ as identification.

(SEAL)

TRISTAN HINE
Commission # HH 300450
Expires August 15, 2026

Notary Public – State of Florida

Tristan Hine
(Print, Type, Stamp, or Commissioned Name of Notary Public)

VIII. NON-COLLUSION AFFADAVIT

STATE OF Florida COUNTY OF Hillsborough

I state that I Douglas J. Ebbers of PCS Civil, LLC,
(Name and Title) (Name of Firm)

I am authorized to make this affidavit on behalf of my firm and its owner, directors and officers. I am the person responsible in my firm for the price(s) and amount(s) of this Response, and the preparation of the Response. I state that:

1. The price(s) and amount(s) of this Response have been arrived at independently and without consultation, communication or agreement with any other Provider, potential provider, Proposal, or potential Proposal.

2. Neither the price(s) nor the amount(s) of this Response, and neither the approximate price(s) nor approximate amount(s) of this Response, have been disclosed to any other firm or person who is a Provider, potential Provider, Proposal, or potential Proposal, and they will not be disclosed before Proposal opening.

3. No attempt has been made or will be made to induce any firm or persons to refrain from submitting a Response for this contract, or to submit a price(s) higher that the prices in this Response, or to submit any intentionally high or noncompetitive price(s) or other form of complementary Response.

4. The Response of my firm is made in good faith and not pursuant to any agreement or discussion with, or inducement from, any firm or person to submit a complementary or other noncompetitive Response.

5. PCS Civil, LLC, its affiliates, subsidiaries, officers, director, and employees (Name of Firm) are not currently under investigation, by any governmental agency and have not in the last three years been convicted or found liable for any act prohibited by State or Federal law in any jurisdiction, involving conspiracy or collusion with respect to Proposal, on any public contract, except as follows:

I state that I and the named firm understand and acknowledge that the above representations are material and important, and will be relied on by the State of Florida for which this Response is submitted. I understand and my firm understands that any misstatement in this affidavit is, and shall be treated as, fraudulent concealment from the State of Florida of the true facts relating to the submission of responses for this contract.

Name of Organization: PCS Civil, LLC Signed By: _____

Print Name: Douglas J. Ebbers, President

The foregoing instrument was sworn to (or affirmed), subscribed, and acknowledged before me by means of ☒ physical presence or ☐ online notarization, this 7th day of April, 2026, by Douglas J. Ebbers, who is personally known to me or has produced _____ as identification.

(SEAL)

_____
Notary Public – State of Florida

TRISTAN HINE
Commission # HH 300450
Expires August 15, 2026

Tristan Hine
(Print, Type, Stamp, or Commissioned Name of Notary Public)

Document A310™ – 2010

Conforms with The American Institute of Architects AIA Document 310

Bid Bond

CONTRACTOR:
(Name, legal status and address)

PCS Civil, Inc
6920 Asphalt Ave.
Tampa, FL 33614

SURETY:
(Name, legal status and principal place of business)

Markel Insurance Company
4521 Highwoods Parkway
Glen Allen, VA 23060

This document has important legal consequences. Consultation with an attorney is encouraged with respect to its completion or modification.

Any singular reference to Contractor, Surety, Owner or other party shall be considered plural where applicable.

OWNER:
(Name, legal status and address)

City of St. Pete Beach
155 Corey Avenue
St. Pete Beach, FL 33706

BOND AMOUNT: $ 5% Five Percent of Amount Bid

PROJECT:
(Name, location or address, and Project number, if any)

On Call Construction Services, St. Pete Beach, FL

The Contractor and Surety are bound to the Owner in the amount set forth above, for the payment of which the Contractor and Surety bind themselves, their heirs, executors, administrators, successors and assigns, jointly and severally, as provided herein. The conditions of this Bond are such that if the Owner accepts the bid of the Contractor within the time specified in the bid documents, or within such time period as may be agreed to by the Owner and Contractor, and the Contractor either (1) enters into a contract with the Owner in accordance with the terms of such bid, and gives such bond or bonds as may be specified in the bidding or Contract Documents, with a surety admitted in the jurisdiction of the Project and otherwise acceptable to the Owner, for the faithful performance of such Contract and for the prompt payment of labor and material furnished in the prosecution thereof; or (2) pays to the Owner the difference, not to exceed the amount of this Bond, between the amount specified in said bid and such larger amount for which the Owner may in good faith contract with another party to perform the work covered by said bid, then this obligation shall be null and void, otherwise to remain in full force and effect. The Surety hereby waives any notice of an agreement between the Owner and Contractor to extend the time in which the Owner may accept the bid. Waiver of notice by the Surety shall not apply to any extension exceeding sixty (60) days in the aggregate beyond the time for acceptance of bids specified in the bid documents, and the Owner and Contractor shall obtain the Surety's consent for an extension beyond sixty (60) days.

If this Bond is issued in connection with a subcontractor's bid to a Contractor, the term Contractor in this Bond shall be deemed to be Subcontractor and the term Owner shall be deemed to be Contractor.

When this Bond has been furnished to comply with a statutory or other legal requirement in the location of the Project, any provision in this Bond conflicting with said statutory or legal requirement shall be deemed deleted herefrom and provisions conforming to such statutory or other legal requirement shall be deemed incorporated herein. When so furnished, the intent is that this Bond shall be construed as a statutory bond and not as a common law bond.

Signed and sealed this 8th day of April, 2026

(Witness) ABBEY BOYLE

PCS Civil, Inc
(Principal) (Seal)

By: DOUG FIBBERS, PRESIDENT
(Title)

(Witness) Brittany Reissfelder

Markel Insurance Company
(Surety) (Seal)

By:
(Title) Kevin Wojtowicz Attorney-in-Fact & FL Licensed Agent

POA# 910113

JOINT LIMITED POWER OF ATTORNEY

KNOW ALL MEN BY THESE PRESENTS: That SureTec Insurance Company, a Corporation duly organized and existing under the laws of the State of Texas and having its principal office in the County of Harris, Texas and Markel Insurance Company (the "Company"), a corporation duly organized and existing under the laws of the state of Illinois, and having its principal administrative office in Glen Allen, Virginia, does by these presents make, constitute and appoint:

Kevin Wojtowicz

Their true and lawful agent(s) and attorney(s)-in-fact, each in their separate capacity if more than one is named above, to make, execute, seal and deliver for and on their own behalf, individually as a surety or jointly, as co-sureties, and as their act and deed any and all bonds and other undertaking in suretyship provided, however, that the penal sum of any one such instrument executed hereunder shall not exceed the sum of:

In Unlimited Amounts

This Power of Attorney is granted and is signed and sealed under and by the authority of the following Resolutions adopted by the Board of Directors of SureTec Insurance Company and Markel Insurance Company:

"RESOLVED, That the President, any Senior Vice President, Vice President, Assistant Vice President, Secretary, Assistant Secretary, Treasurer or Assistant Treasurer and each of them hereby is authorized to execute powers of attorney, and such authority can be executed by use of facsimile signature, which may be attested or acknowledged by any officer or attorney, of the company, qualifying the attorney or attorneys named in the given power of attorney, to execute in behalf of, and acknowledge as the act and deed of the SureTec Insurance Company and Markel Insurance Company, as the case may be, all bond undertakings and contracts of suretyship, and to affix the corporate seal thereto."

IN WITNESS WHEREOF, Markel Insurance Company and SureTec Insurance Company have caused their official seal to be hereunto affixed and these presents to be signed by their duly authorized officers on the 26th day of September, 2024.

SureTec Insurance Company

By: _____
Michael C. Keinig, President

Markel Insurance Company

By: _____
Lindey Jennings, Vice President

State of Texas
County of Harris:

On this 26th day of September, 2024 A. D., before me, a Notary Public of the State of Texas, in and for the County of Harris, duly commissioned and qualified, came THE ABOVE OFFICERS OF THE COMPANIES, to me personally known to be the individuals and officers described in, who executed the preceding instrument, and they acknowledged the execution of same, and being by me duly sworn, disposed and said that they are the officers of the said companies aforesaid, and that the seals affixed to the proceeding instrument are the Corporate Seals of said Companies, and the said Corporate Seals and their signatures as officers were duly affixed and subscribed to the said instrument by the authority and direction of the said companies, and that Resolutions adopted by the Board of Directors of said Companies referred to in the preceding instrument is now in force.

IN TESTIMONY WHEREOF, I have hereunto set my hand, and affixed my Official Seal at the County of Harris, the day and year first above written.

By: _____
Chelsea Turner, Notary Public
My commission expires 7/6/2028

We, the undersigned Officers of SureTec Insurance Company and Markel Insurance Company do hereby certify that the original POWER OF ATTORNEY of which the foregoing is a full, true and correct copy is still in full force and effect and has not been revoked.

IN WITNESS WHEREOF, we have hereunto set our hands, and affixed the Seals of said Companies, on the 8 day of April, 2026.

SureTec Insurance Company

By: _____
M. Brent Beaty, Assistant Secretary

Markel Insurance Company

By: _____
Andrew Marquis, Assistant Secretary

Any Instrument Issued in excess of the penalty stated above is totally void and without any validity. 910113
For verification of the authority of this Power you may call (713)812-0800 on any business day between 8:30 AM and 5:00 PM CST

Client#: 2238406 569PCSCIV L

ACORD™ C RTIFICATE OF LIA IL TY NSURANCE

DA (MM/DD/YYYY) 3/09/2026

THIS CERT FICAT IS ISSU D AS A MA T R OF INFORMATION ONLY AND CONFERS NO R GHTS UPON HE CER IFICAT HOLDER. HIS C R IFICA E DO S NOT AFFIRMATIVELY OR NEGATIV LY AMEND, EX END OR ALT R THE COVERAG AFFORDED BY THE POLICIES B LOW. H S CER IFICA E OF INSURANCE DOES NOT CONS ITU E A CONTRACT B T EN H SSU NG NSURER(S), AUTHORIZED R PRES N ATIV OR PRODUCER, AND THE C RTIFICATE HOLDER.

IMPORTAN : If the certificate holder is an ADDITIONAL NSURED, the policy(ies) must have ADD TIONAL NSURED provisions or be endorsed. If SU ROGAT ON S AIVED, subject to the terms and conditions of the policy, certain policies may require an endorsement. A statement on this certificate does not confer any rights to the certificate holder in lieu of such endorsement(s).

PRODUC R
McGriff, a MMA LLC Company
12485 28th Street N
St Petersburg, FL 33716

CONTAC NAME: Patricia Byrne
PHONE (A/C, No, Ext): 813-682-1510 FAX (A/C, No):
E-MAIL ADDRESS: Tricia.Byrne01@MarshMMA.com

INSURER(S) AFFORDING COVERAGE	NAIC #
INSURER A : Zurich American Insurance Company	16535
INSURER B : Great American nsurance Company	16691
INSURER C : XL Specialty nsurance Company	37885
INSURER D : Indian Harbor Insurance Company	36940
INSURER E :	
INSURER F :	

INSURED
PCS Civil, LLC
6920 Asphalt Avenue
Tampa, FL 33614-3625

COVERAG S CERT FICATE NUM ER: R VIS ON NUMB R:

THIS IS TO CERTIFY THAT THE POLICIES OF INSURANCE LISTED BELOW HAVE BEEN ISSUED TO THE INSURED NAMED ABOVE FOR THE POLICY PERIOD INDICATED. NOTWITHSTANDING ANY REQUIREMENT, TERM OR CONDITION OF ANY CONTRACT OR OTHER DOCUMENT WITH RESPECT TO WHICH THIS CERTIFICATE MAY BE ISSUED OR MAY PERTAIN, THE INSURANCE AFFORDED BY THE POLICIES DESCRIBED HEREIN IS SUBJECT TO ALL THE TERMS, EXCLUSIONS AND CONDITIONS OF SUCH POLICIES. LIMITS SHOWN MAY HAVE BEEN REDUCED BY PAID CLAIMS.

NSR LTR	YP OF NSURANCE	ADDL INSR	SU R WVD	POLICY NUM R	POLICY EFF (MM/DD/YYYY)	POLICY EXP (MM/DD/YYYY)	LIMITS	
A	X COMMERCIAL GENERAL LIAB LITY	X	X	GLO292999005	03/01/2026	03/01/2027	EACH OCCURRENCE	$1,000,000
	CLAIMS-MADE X OCCUR						DAMAGE TO RENTED PREMISES (Ea occurrence)	$1,000,000
							MED EXP (Any one person)	$10,000
							PERSONAL & ADV INJURY	$1,000,000
	GEN'L AGGREGATE LIMIT APPLIES PER:						GENERAL AGGREGATE	$2,000,000
	POLICY X PRO-JECT X LOC						PRODUCTS - COMP/OP AGG	$2,000,000
	OTHER:							$
A	AUTOMOBILE LIABILITY	X	X	BAP292999105	03/01/2026	03/01/2027	COMBINED SINGLE LIMIT (Ea accident)	$1,000,000
	X ANY AUTO						BODILY INJURY (Per person)	$
	OWNED AUTOS ONLY / SCHEDULED AUTOS						BODILY INJURY (Per accident)	$
	X HIRED AUTOS ONLY / X NON-OWNED AUTOS ONLY						PROPERTY DAMAGE (Per accident)	$
								$
B	X UMBRELLA LIAB X OCCUR			TUU327244606	03/01/2026	03/01/2027	EACH OCCURRENCE	$8,000,000
	EXCESS LIAB CLAIMS-MADE						AGGREGATE	$8,000,000
	DED RETENTION $							$
A	WORKERS COMPENSATION AND EMPLOYERS' LIABILITY Y / N		X	WC292998905	03/01/2026	03/01/2027	X PER STATUTE OTH-ER	
	ANY PROPRIETOR/PARTNER/EXECUTIVE OFFICER/MEMBER EXCLUDED? Y	N / A					E.L. EACH ACCIDENT	$1,000,000
	(Mandatory in NH)						E.L. DISEASE - EA EMPLOYEE	$1,000,000
	If yes, describe under DESCRIPTION OF OPERATIONS below						E.L. DISEASE - POLICY LIMIT	$1,000,000
C	Contractors Equip			UM00081999MA	03/01/2026	03/01/2027	Schedule on file	
C	Leased/Rented Equ			UM00081999MA	03/01/2026	03/01/2027	$500,000 Per tem	
D	Professional Liab			PEC004971909	03/01/2026	03/01/2027	$2,000,0000 Aggregate	

DESCRIPTION OF OPERATIONS / LOCATIONS / VEHICLES (ACORD 101, Additional Remarks Schedule, may be attached if more space is required)
6920 Asphalt, LLC, Axos Bank and Jadian Industrial Storage, LLC, additional insured status applies to any person or organization when required by written contract. General Liability coveage is Primary and Non Contributory when required by written contract.
Loc# 1 - 6920 Asphalt Ave; ampa, FL

CERT FICATE HOLD R

City of St. Pete Beach
155 Corey Avenue
St. Pete Beach, FL 33706

CANCELLAT ON

SHOULD ANY OF THE ABOVE DESCRIBED POLICIES BE CANCELLED BEFORE THE EXPIRATION DATE THEREOF, NOTICE WILL BE DELIVERED IN ACCORDANCE WITH THE POLICY PROVISIONS.

AUTHORIZED REPRESENTATIVE

© 1988-2015 ACORD CORPORA ION. All rights reserved.

Ron DeSantis, Governor

Melanie S. Griffin, Secretary

STATE OF FLORIDA
DEPARTMENT OF BUSINESS AND PROFESSIONAL REGULATION

CONSTRUCTION INDUSTRY LICENSING BOARD

THE GENERAL CONTRACTOR HEREIN IS CERTIFIED UNDER THE
PROVISIONS OF CHAPTER 489, FLORIDA STATUTES

EBBERS, DOUGLAS J.

PCS CIVIL, INC.
6920 ASPHALT AVE.
TAMPA FL 33614

LICENSE NUMBER: CGC1510959

EXPIRATION DATE: AUGUST 31, 2026

Always verify licenses online at MyFloridaLicense.com

ISSUED: 09/01/2024

Do not alter this document in any form.

This is your license. It is unlawful for anyone other than the licensee to use this document.

Florida Department of Transportation

RON DESANTIS
GOVERNOR

605 Suwannee Street
Tallahassee, FL 32399-0450

JARED W. PERDUE, P.E.
SECRETARY

March 23,2026

PCS CIVIL, LLC
6920 ASPHALT AVENUE
TAMPA, FLORIDA 33614

REVISED
RE: CERTIFICATE OF QUALIFICATION

The Department of Transportation has qualified your company for the type of work indicated below.

FDOT APPROVED WORK CLASSES:
DRAINAGE, FLEXIBLE PAVING, GRADING, GRASSING, SEEDING AND SODDING, HOT PLANT-MIXED BITUM. COURSES, INTERMEDIATE BRIDGES, MAJOR BRIDGE - BRIDGES OF CONVENTIONAL CONSTRUCTION WHICH ARE OVER A WATER OPENING OF 1,000 FEET OR MORE, MAJOR BRIDGE - CAST IN PLACE / POST-TENSIONED / SUPER-STRUCTURE, MAJOR BRIDGE - CURVED STEEL GIRDERS, MAJOR BRIDGE - MULTI-LEVEL ROADWAYS, MINOR BRIDGES, PORTLAND CEMENT CONCRETE ROADWAY PAVING, R&R INTERMEDIATE BRIDGES ("R&R" IS REPAIR AND REHABILITATE), R&R MINOR BRIDGES, SIDEWALK, SOUND (NOISE) BARRIER WALL,CURB & GUTTER, ADA RAMPS, UNDERGROUND UTILITIES (WATER & SEWER), RIPRAP, CONCRETE PAVEMENT REPAIRS, SPALL REPAIR, STEEL SHEET PILING, RETAINING WALL, SEAWALL.

Unless notified otherwise, this Certificate of Qualification will expire **6/30/2027.**

In accordance with Section 337.14(1), Florida Statutes, an application for qualification must be filed within (4) months of the ending date of the applicant's audited annual financial statements.

If the company's maximum capacity has been revised, it may be accessed by logging into the Contractor Prequalification Application System via the following link:
HTTPS://fdotwp1.dot.state.fl.us/ContractorPreQualification

Once logged in, select "View" for the most recently approved application, and then click the "Manage" and "Application Summary" tabs.

The company may apply for a Revised Certificate of Qualification at any time prior to the expiration date of this certificate according to Section 14-22.0041(3), Florida Administrative Code (F.A.C.), by accessing the most recently approved application as shown above and choosing "Update" instead of "View." If certification in additional classes of work is desired, documentation is needed to show that the company has performed such work.

All prequalified contractors are required by Section 14-22.006(3), F.A.C., to certify their work underway monthly in order to adjust maximum bidding capacity to available bidding capacity. You can find the link to this report at the website shown above.

Sincerely,

James E. Taylor II

James E. Taylor II, Prequalification Supervisor
Contracts Administration Office

JTII

EXHIBIT "D"

Conditional Federal/Grant-Funded Contract Addendum

(Place Conditional Federal/Grant-Funded Contract Addendum behind this page)

EXHIBIT "D"
CONDITIONAL FEDERAL/GRANT-FUNDED CONTRACT ADDENDUM

1. Applicability

1.1 This Exhibit applies only if activated under Section 25 of the Agreement or under a Task Order. If not activated, this Exhibit is reserved and has no operative effect.
1.2 If activated, this Exhibit supplements the Agreement and applies to the federally funded or grant-funded Work only. Contractor shall comply with all applicable requirements of the federal award, grant agreement, pass-through entity, program rules, and applicable law.
1.3 The City may provide additional award-specific clauses, certifications, forms, wage determinations, reporting requirements, or flow-down provisions. Contractor shall comply with such requirements as a condition of performing the affected Work and receiving payment from the applicable funding source.

2. Federal Award and Grant Information

Federal/Grant Program: [insert]
Federal Awarding Agency: [insert]
Pass-Through Entity: [insert, if applicable]
Assistance Listing Number: [insert, if applicable]
Federal Award Identification Number: [insert, if applicable]
Award or Disaster Declaration Date: [insert, if applicable]
Project Number: [insert]
Special Award Conditions: [insert or attach]

3. Remedies for Breach

For contracts exceeding the simplified acquisition threshold, Contractor acknowledges that the City may exercise all administrative, contractual, legal, and equitable remedies available under the Contract Documents and applicable law if Contractor violates or breaches contract terms. Remedies may include withholding payment, requiring correction, suspension of Work, termination, procurement from alternate sources, damages, sanctions, and any other appropriate remedy.

4. Termination for Cause and Convenience

For contracts in excess of $10,000, the City may terminate the federally funded or grant-funded Work for cause or convenience as provided in the Agreement. The notice of termination will identify the effective date and the manner of termination. Contractor shall be paid only for authorized Work satisfactorily performed before the effective date of termination, subject to documentation, offsets, allowable cost requirements, and applicable grant rules.

5. Equal Employment Opportunity

Except as otherwise provided under 41 C.F.R. Part 60, if the Work is a federally assisted construction contract as defined in 41 C.F.R. § 60-1.3, Contractor shall comply with the equal opportunity clause in 41 C.F.R. § 60-1.4(b), which is incorporated by reference as if fully set forth

RESERVED

herein, and shall include the required clause in covered subcontracts and purchase orders.

6. Davis-Bacon Act and Copeland Anti-Kickback Act

When required by federal program legislation, all prime construction contracts in excess of $2,000 must include compliance with the Davis-Bacon Act, 40 U.S.C. §§ 3141-3148, as supplemented by Department of Labor regulations at 29 C.F.R. Part 5. If Davis-Bacon applies, Contractor shall pay laborers and mechanics at rates not less than the applicable wage determination, pay wages not less than once per week, submit certified payrolls if required, and comply with all applicable labor standards.
If Davis-Bacon applies, Contractor shall also comply with the Copeland "Anti-Kickback" Act, 40 U.S.C. § 3145, as supplemented by 29 C.F.R. Part 3, and shall not induce any person employed in the construction, completion, or repair of public work to give up any part of compensation to which the person is entitled. Contractor shall report suspected or reported violations to the City.

7. Contract Work Hours and Safety Standards Act

Where applicable, for contracts in excess of $100,000 that involve the employment of mechanics or laborers, Contractor shall comply with 40 U.S.C. §§ 3702 and 3704, as supplemented by Department of Labor regulations at 29 C.F.R. Part 5. Contractor shall compute wages based on a standard 40-hour workweek and shall compensate covered workers at not less than one and one-half times the basic rate of pay for hours worked in excess of 40 hours in a workweek. No laborer or mechanic shall be required to work under unsanitary, hazardous, or dangerous conditions. These requirements do not apply to purchases of supplies, materials, or articles ordinarily available on the open market, or to contracts for transportation or transmission of intelligence.

8. Rights to Inventions

If the federal award meets the definition of "funding agreement" under 37 C.F.R. § 401.2(a), and the Work involves substitution of parties, assignment, or performance of experimental, developmental, or research work under that funding agreement, Contractor shall comply with 37 C.F.R. Part 401 and any implementing regulations issued by the awarding agency.

9. Clean Air Act and Federal Water Pollution Control Act

For contracts and subgrants exceeding $150,000, Contractor shall comply with all applicable standards, orders, and regulations issued pursuant to the Clean Air Act, 42 U.S.C. §§ 7401-7671q, and the Federal Water Pollution Control Act, 33 U.S.C. §§ 1251-1387. Contractor shall report each violation to the City, and the City will report violations as required to the federal awarding agency and the appropriate EPA regional office. Contractor shall include these requirements in each covered subcontract exceeding $150,000.

10. Debarment and Suspension

Contractor shall comply with Executive Orders 12549 and 12689 and 2 C.F.R. Part 180. Contractor shall not enter into covered transactions with parties listed on the governmentwide exclusions in the System for Award Management. Contractor shall verify that Contractor, its principals, and its affiliates are not excluded or disqualified and shall include this requirement in lower-tier covered

RESERVED

transactions.

11. Byrd Anti-Lobbying Amendment

For awards exceeding $100,000, Contractor shall comply with the Byrd Anti-Lobbying Amendment, 31 U.S.C. § 1352. Contractor shall certify that it has not and will not use federal appropriated funds to pay any person or organization for influencing or attempting to influence an officer or employee of an agency, a member of Congress, an officer or employee of Congress, or an employee of a member of Congress in connection with obtaining a federal contract, grant, or other covered award. Contractor shall disclose lobbying with non-federal funds as required and shall require each lower tier to make the same certification and disclosure.

12. Procurement of Recovered Materials

Contractor shall comply with 2 C.F.R. § 200.323 and Section 6002 of the Solid Waste Disposal Act, as amended by the Resource Conservation and Recovery Act, to the extent applicable. Contractor shall procure designated items containing the highest percentage of recovered materials practicable, consistent with competition and performance requirements, when the purchase price exceeds the applicable threshold or the value of the quantity acquired during the preceding fiscal year exceeded the applicable threshold. Contractor shall also procure solid waste management services in a manner that maximizes energy and resource recovery and shall support the City's affirmative procurement program where applicable.

13. Domestic Preferences for Procurements

As appropriate and to the extent consistent with law, Contractor shall comply with 2 C.F.R. § 200.322 by providing a preference for the purchase, acquisition, or use of goods, products, or materials produced in the United States, including iron, aluminum, steel, cement, and other manufactured products, when the Work is performed under a federal award.

14. Prohibition on Certain Telecommunications and Video Surveillance Equipment or Services

Contractor shall comply with 2 C.F.R. § 200.216 and shall not obligate or expend federal funds to procure, obtain, extend, renew, or enter into a contract to procure or obtain covered telecommunications equipment or services as a substantial or essential component of any system or as critical technology as part of any system. Contractor shall include this prohibition in applicable subcontracts and purchase orders.

15. Build America, Buy America

If the Work is an infrastructure project funded by a federal financial assistance program subject to the Build America, Buy America Act, Contractor shall comply with all applicable domestic content procurement preference requirements for iron, steel, manufactured products, and construction materials permanently incorporated into the project, unless a waiver applies. Contractor shall provide certifications, documentation, and product information required by the City, funding agency, or pass-through entity.

16. Small and Minority Businesses, Women's Business Enterprises, Veteran-Owned Businesses,

RESERVED

and Labor Surplus Area Firms

Contractor shall take the affirmative steps required by 2 C.F.R. § 200.321 to assure that small businesses, minority businesses, women's business enterprises, veteran-owned businesses, and labor surplus area firms are used when possible, including, as applicable, placing such businesses on solicitation lists, soliciting them when they are potential sources, dividing requirements when economically feasible, establishing delivery schedules that encourage participation, using appropriate assistance organizations, and requiring subcontractors to take the same affirmative steps.

17. Bonding Requirements for Federal Construction or Facility Improvement Contracts

For construction or facility improvement contracts or subcontracts exceeding the simplified acquisition threshold, Contractor shall comply with the bonding requirements in 2 C.F.R. § 200.326 when the federal award requires such bonding, including bid guarantee, performance bond, and payment bond requirements unless the federal agency or pass-through entity determines that the City's bonding policy and requirements adequately protect the federal interest.

18. Access to Records; Retention

Contractor shall provide the City, the federal awarding agency, the pass-through entity, the Comptroller General of the United States, and their authorized representatives access to any documents, papers, records, and other materials that are directly pertinent to the federal or grant-funded Work for the purpose of making audits, examinations, excerpts, and transcriptions. Contractor shall retain records for the period required by 2 C.F.R. Part 200, the award terms, the Agreement, and applicable law, whichever is longer.

19. No Obligation by Federal Government

The federal government is not a party to this Agreement or any Task Order and is not subject to any obligations or liabilities to the City, Contractor, or any other party arising from the Agreement or Work.

20. Program Fraud and False or Fraudulent Statements

Contractor acknowledges that 31 U.S.C. Chapter 38 and other federal laws concerning fraud, false claims, and false statements may apply to Contractor's actions pertaining to federally funded or grant-funded Work. Contractor shall not submit false, fictitious, fraudulent, or misleading claims, certifications, invoices, records, or statements.

21. Additional Award-Specific Terms

If the federal awarding agency, pass-through entity, grant agreement, disaster assistance program, or other funding source requires additional clauses, certifications, forms, reporting, wage determinations, environmental/historic preservation conditions, civil rights provisions, procurement certifications, or other requirements, such requirements are incorporated into the affected Task Order upon written notice by the City. Contractor shall execute additional documents reasonably required by the City to document compliance.

RESERVED

CITY COMMISSION MEETING
CITY OF ST. PETE BEACH
COMMISSION CHAMBERS

Agenda Report

Agenda Title Name: Authorize the City Manager to execute the Agreement with Southern Road and Bridge, LLC for Civil On-Call Construction Services on an as-needed basis in an amount not to exceed annually appropriated funding.

Action Request: Motion to authorize the City Manager to execute the Agreement with Southern Road and Bridge, LLC for Civil On-Call Construction Services on an as-needed basis in an amount not to exceed annually appropriated funding.

Strategic Objective: Reliable Infrastructure

Date: June 23, 2026

Prepared By: Camden Mills, Public Services Director

Through: Frances Robustelli, City Manager

Summary of Issue: The City publicly advertised a Request for Proposals (RFP) for a task work order-driven Civil On-Call Construction Services contract. Five (5) responsive proposals were received on March 18, 2026. Following evaluation, the City's selection committee recommended award to Ajax Paving Industries of Florida LLC, BCS Construction Group Cathcart Construction Company Florida LLC, PCS Civil LLC, and Southern Road and Bridge LLC

- Qualifications and Experience
- References and Past Performance
- Capacity to Perform the Work
- Cost

The contract provides not-to-exceed unit prices for labor, materials, equipment, tools, transportation, and incidentals necessary to perform civil construction services on an as-needed basis throughout the City. Projects may include roadway and intersection improvements, drainage upgrades, ADA improvements, sidewalk construction, alley improvements, signing and pavement markings, recreational trails, traffic signal improvements, and

intelligent transportation system (ITS) infrastructure.

Work will be authorized by task order on an as-needed basis in an amount not to exceed annually appropriated funding. The initial contract term is three (3) years with the option for two (2) additional one (1) year renewals upon mutual agreement and annual appropriation of funds.

Approval of this agreement will provide the City with qualified contractors to perform civil infrastructure improvements in a timely and cost-effective manner, improve responsiveness to maintenance and capital project needs, and support implementation of the City's transportation, drainage, utility, and public infrastructure programs.

Funding:

301.5410.563000 Improvements Other Than Buildings (remaining balance $211,746.90)

301.5411.563000 Improvements Other Than Buildings (remaining balance $8,478,760.96)

301.5726.563000 Improvements Other Than Buildings (remaining balance $825,791.26)

Other CIP funding sources may be used based on the available annual budget

Attachments:

1. Southern Road and Bridge Contract Signed

CITY OF ST. PETE BEACH, FLORIDA
SERVICES AGREEMENT

Civil On-Call Construction Services

This is an Agreement (the "Agreement") entered into by and between the **CITY OF ST. PETE BEACH** (hereinafter "City") and **SOUTHERN ROAD AND BRIDGE, LLC**. (hereinafter "Contractor"). The City and Contractor together shall be referred to as the "parties."

WHEREAS, The City properly issued a Request for Bids, attached and incorporated hereto as Exhibit "B" and the City Commission authorized the selection of Contractor at its 06/23/2026, public hearing.

WHEREAS, City desires to purchase from Contractor the services described in this Agreement.

WHEREAS, Contractor is in the business of providing the services described herein, and has submitted an appropriate proposal to the City to provide the same.

WHEREAS, this Agreement has been properly approved by the appropriate authority of the City and the Contractor.

NOW, THEREFORE, upon the mutual covenants contained herein, and other good and valuable considerations, the sufficiency of which is hereby acknowledged, the parties hereto hereby agree to the following:

1. Recitals. The foregoing recitals are true and correct and incorporated herein by reference.

2. Standard Contract Addendum. The attached Standard Contract Addendum, which contains all the Florida Statutorily required provisions applicable to this Agreement, is attached hereto as Exhibit "A" and its provisions modify and supplement this Agreement.

3. Scope of Services. The Contractor must perform all work for the City required by the contract documents as set forth below:

a. Contractor will furnish all labor, materials, and equipment necessary as indicated in the Request for Bids (Exhibit "B") in the amount of Not To Exceed the Annual Budgeted amoun. Funding will be awarded by Task Orders.

b. Contractor must supervise the workforce to ensure that all workers conduct themselves and perform their work in a safe and professional manner. Contractor must comply with all OSHA safety rules and regulations in the operation of equipment and in the performance of the work. Contractor must at all times have a competent field supervisor on the job site to enforce these policies and procedures at the Contractor's expense.

c. Contractor will provide the City with seventy-two (72) hours written notice prior to the beginning of work under this Agreement and prior to any schedule change with the exception of changes caused by inclement weather.

d. Contractor must comply with any and all Federal, State, and local laws and regulations

now in effect, or hereinafter enacted during the term of this Agreement, which are applicable to the Contractor, its employees, agents or subcontractors, if any, with respect to the work and services described herein. The Contractor further warrants that there has been no violation of copyrights or patent rights either in the United States of America or in foreign countries in connection with the work of the contract.

e. Contractor warrants to the City that all goods and materials furnished under the contract will be new unless otherwise specified and that contractor possesses good, clear, and marketable title to said goods and there are no pending liens, claims, or encumbrances whatsoever against said goods. All work not conforming to these requirements, including substitutions not properly approved and authorized may be considered defective. Contractor further warrants that all goods, materials and workmanship furnished, whether furnished by the Contractor or its subcontractors and suppliers, will comply with the specifications, drawings and other descriptions supplied or adopted. Last, Contractor warrants all material and workmanship for a minimum of (1) year from date of project completion and acceptancy by the City. If within one (1) year after acceptance by the City, or within such larger period of time as may be prescribed by law any of the work is found to be defective or not in accordance with the contract documents, the Contractor will, after receipt of a written notice from the City to do so, promptly correct the work.

4. Damages. Time is of the essence in the performance of this Agreement. City shall be entitled to liquidated damages in the amount of $500 per day, for each day after the date set forth in paragraph 10, that Contractor has failed to properly and completely deliver all goods or provide all service specified herein. The Contractor specifically acknowledges that the foregoing sum is reasonable and does not constitute a penalty.

5. Remedies.

   a. Damages. The City reserves the right to recover any ascertainable actual damages incurred as a result of the failure of the Contractor to perform in accordance with the requirements of this Agreement, or for losses sustained by the city resultant from the Contractor's failure to perform in accordance with the requirements of this Agreement.

   b. Correction of Work. If, in the judgment of the City, work provided by the Contractor does not conform to the requirements of this Agreement, or if the work exhibits poor workmanship, the city reserves the right to require that the Contractor correct all deficiencies in the work to bring the work into conformance without additional cost to the City, and/or replace any personnel who fail to perform in accordance with the requirements of this Agreement. The City is the sole judge of non-conformance and the quality of workmanship.

6. Waiver of Liens. Prior to final payment of the Contract Sum, a final waiver of lien must be submitted by all suppliers, subcontractors, and/or Contractors who worked on the project that is the subject of this Agreement.

7. Warranties.
   a. Warranty of Title. Contractor warrants to the City that all goods and materials furnished

under the contract will be new unless otherwise specified and that Contractor possesses good, clear, and marketable title to said goods and there are no pending liens, claims, or encumbrances whatsoever against said goods. All work not conforming to these requirements, including substitutions not properly approved and authorized may be considered defective.

b. Warranty of Specifications. The Contractor warrants that all goods, materials, workmanship furnished, whether by the Contractor or its subcontractors and suppliers, will comply with the specifications, drawings and other descriptions supplied or adopted.

c. Warranty of Merchantability. The Contractor warrants all material and workmanship for a minimum of one (1) year from date of project completion and acceptance by the City. If within one (1) year after acceptance by the city, or within such larger period of time as may be described by law any of the work is found to be defective or not in accordance with the contract documents, the Contractor must after receipt of a written notice from the City to do so, promptly correct the work unless the City has previously given the Contractor a written acceptance of such condition.

8. Term. This Agreement will remain in effect for a period of (3) three years with (2) two, (1) one-year extensions from the Effective Date.

9. Effective date. The "Effective Date" of this Agreement shall be the date this Agreement has been executed by all parties.

10. Termination. This Agreement may be canceled by the City when:
   a. Sufficient funds are not available to continue its full and faithful performance to the Agreement.
   b. Sub-standard or non-performance of Agreement.
   c. The City wishes to terminate the Agreement at any time and for any reason, upon giving thirty (30) days prior written notice to the Contractor.

11. Fiscal Non-funding. If funds for the requested services described herein are not appropriated via the annual budget adoption process, the City reserves the right to cancel the Agreement immediately upon written notice to the Contractor.

12. Non-Exclusivity. Contractor acknowledges that the City may enter into agreements with other consultants or may have its own employees complete the work for services similar to the services that are subject to this Agreement.

13. Compensation. Upon Contractor's satisfactory full performance of the services or in accordance with the payment schedule provided in the attached proposal, City shall pay Contractor, as full consideration for services provided in this Agreement.

14. Insurance. To the extent that this Agreement requires Contractor to provide any services of any kind, Contractor and all of Contractor's subcontractors shall maintain public liability insurance in a combined single limit for bodily injury and property damage in the amount of not less than $1,000,000.00, satisfactory to the City Manager, naming the City as an additionally named insured and providing coverage up through and including the final performance of any services provided

herein. Contractor and all of Contractor's subcontractors shall maintain in full force and effect a policy of worker's compensation insurance for all of Contractor's employees in accordance with applicable state and federal law. Said insurance coverage shall include employer's liability with a single limit of $100,000.00 per accident or occurrence. Contractor shall present City with a certificate for all the foregoing insurance, at the time of executing this Agreement and at such other times requested by the City.

The Contractor waives all rights against the City, its consultants, separate contractors, if any, and any of its subcontractors, agents and employees, for any and all damages caused to the extent covered by insurance described herein and obtained pursuant to this Section or other property insurance applicable to the services and product provided under this Agreement. The City shall require of the Contractor, Contractor's consultants, separate contractors, if any, and the subcontractors, sub-subcontractors, agents and employees of any of them, by appropriate agreements, written where legally required for validity, similar waivers each in favor of other parties enumerated herein. The policies shall provide such waiver of subrogation by endorsement otherwise. A waiver of subrogation shall be effective as to a person or entity even though that person or entity would otherwise have a duty of indemnification, contractual or otherwise, did not pay the insurance premium directly or indirectly, and whether or not the person or entity had an insurable interest in the property damaged.

15. Indemnification. In consideration of the payment of ten dollars as part of the compensation described herein, such sum being specifically found by Contractor to be sufficient consideration for this indemnification, Contractor shall indemnify, defend and hold the City harmless for itself, its past/present/future elected and appointed officials, its employees, agents and assigns, from and against any and all losses, claims, damages, suits, actions, liability or demands, including attorneys' fees and costs of litigation through all appellate proceedings, arising from the performance or non-performance of this Agreement, whether caused in part by the City or not, and in connection with violations of copyrighted or trademarked materials used by Contractor, loss of life, bodily or personal injury, or property damage, including loss of use thereof, directly or indirectly caused by, resulting from, arising out of or occurring in connection with the operations of the Contractor or its officers, employees, agents, subcontractors, or independent Contractors, excepting only such loss of life, bodily or personal injury, or property damage solely attributable to the gross negligence or willful misconduct of the City or its elected or appointed officials and employees. In any and all claims against the City, or any of their agents or employees by any employee of the Contractor any subcontractor, anyone directly or indirectly employed by any of them or anyone for whose acts any of them may be liable, the indemnification obligation under this paragraph is not limited in any way by any limitation in this amount or type of damages compensation or benefits payable by or for the Contractor or any subcontractor under Workers' Compensation Acts, Disability Benefit Acts or other Employee Benefit Acts. Nothing contained herein is intended nor may it be construed, to waive City's rights and immunities under the common law or Section 768.28, Florida Statutes, as amended from time to time; nor will anything included herein be construed as consent to be sued by any third parties in any matter arising out of this Agreement. To the extent considered necessary by the Contract Administrator and the City Attorney, any sums due Contractor under this Agreement may be retained by the City until all of the City's claims subject to this indemnification obligation have been settled or otherwise resolved, and any amount withheld is not subject to payment of interest by the City. The above provisions

will survive the termination or expiration of this Agreement and will pertain to any occurrence during the term of this Agreement, even though the claim may be made after the termination or expiration hereof.

16. Discriminatory Vendor List. Contractor hereby acknowledges its continuous duty to disclose to the City if the Contractor or any of its affiliates, as defined by Section 287.134 (1)(a), Florida Statutes, are placed on the Discriminatory Vendor List. Pursuant to Section 287-134 (2)(a), Florida Statutes: "An entity or affiliate who has been placed on the discriminatory vendor list may not submit a bid, proposal, or reply on a contract to a public entity; may not submit a bid or proposal, or reply on a contract with a public entity for the construction or repair of a public building or public work; may not submit bids, proposals, or replies on leases of real property to a public entity; may not be awarded or perform work as a contractor, supplier, subcontractor, or consultant under a contract with any public entity; and may not transact business with any public entity."

17. Independent Contractor. This Agreement does not create an employee/employer relationship between the parties. It is the intent of the parties that the Contractor is an independent contractor under this Agreement and not the City's employee for any purposes, including but not limited to, the application of the Fair Labor Standards Act minimum wage and overtime payments, Federal Insurance Contribution Act, the Social Security Act, the Federal Unemployment Tax Act, the provisions of the Internal Revenue Code, the State Worker's Compensation Act, and the State Unemployment Insurance law. The Contractor will retain sole and absolute discretion in the judgment of the manner and means of carrying out Contractor's activities and responsibilities hereunder provided, further that administrative procedures applicable to services rendered under this Agreement will be those of Contractor, which policies of Contractor will not conflict with City, State, or United States policies, rules, or regulations relating to the use of Contractor's funds provided for herein. The contractor agrees that it is a separate and independent enterprise from the City, that it had full opportunity to find other business, that it has made its own investment in it business, and that it will utilize a high level of skill necessary to perform the work. This Agreement must not be construed as creating any joint employment relationship between the Contractor and the City and the City will not be liable for any obligation incurred by Contractor, including but not limited to unpaid minimum wages and/or overtime premiums.

18. Audit Rights. The City reserves the right to audit the records of the Contractor for the commodities and/or serves provided under the contract at any time during the performance and term of the contract and for a period of five (5) years after completion and acceptance by the City. If required by the City, the Contractor agrees to submit to an audit by an independent certified public accountant selected by the City. The Contractor must allow the City to inspect, examine and review the records of the Contractor in relation to this Agreement at any an all times during normal business hours during the term of the Agreement.

19. Exhibits. The following Exhibits shall be attached, incorporated, and made a part of this Agreement:
    a. Standard Contract Addendum (Exhibit "A")
    b. Request for Bid/Proposal (Exhibit "B")
    c. Vendor Bid/Proposal (Exhibit "C")

d. Conditional Federal/Grant-Funded Contract Addendum (Exhibit "D")

20. Notices. All notices sent pursuant to this Agreement shall be given in writing via certified mail or overnight courier and shall be delivered to the following addresses:

As to Contractor:
Southern Road and Bridge, LLC.
2997 Alt 19
Palm Harbor FL 34683

As to City:
City Manager
City of St. Pete Beach
155 Corey Avenue
St. Pete Beach, FL 33706

With Copy To:
prequal@southernrb.com

With Copy To:
attorney@stpetebeach.org

21. Conflicts and Severability. To the extent that any terms in the attached proposal conflict with the terms of this Agreement, the terms of this Agreement shall control and supersede such conflicting terms in the attached proposal, to the extent of such conflict. If any section, part of section, paragraph, clause, phrase, or word of this Agreement is declared invalid, the remaining provisions of this Agreement shall not be affected.

22. Amendments. This document and exhibits embody the entire Agreement of the parties. There are no promises, terms, conditions, or representations binding on either party hereto, other than those contained herein; and this document shall supersede all previous communications, representations, and/or agreements between the parties hereto, whether written or oral. This Agreement shall not be modified by any oral statement, communication, Agreement, course of conduct, or by anything other than a writing signed by the parties. This Agreement may be amended or modified only in writing signed by all parties hereto.

23. Jurisdiction, Venue, Attorney Fees. This Agreement shall be governed and construed according to the laws of Florida, and venue for any action arising herefrom shall be in Pinellas County, Florida. The prevailing party in any action to enforce or interpret this Agreement shall be entitled to reasonable attorney's fees incurred through all appellate proceedings.

24. Assignment. This Agreement shall be binding upon the parties, their successors, assigns, and legal representatives. Contractor shall not assign or otherwise transfer any of the rights or duties under this Agreement, without the express written consent of the City.

25. Counterparts. This Agreement may be executed and delivered in any number of counterparts, each of which so executed and delivered shall be deemed to be an original and all of which shall constitute one and the same instrument. Facsimile, documents executed, scanned and transmitted electronically and electronic signatures shall be deemed original signatures for purposes of this Agreement and all matters related thereto, with such facsimile, scanned and electronic signatures having the same legal effect as original signatures.

26. Authority. Contractor hereby acknowledges that the person executing this Agreement on behalf of Contractor has the full authority to do so and to bind Contractor to the terms hereof.

IN WITNESS WHEREOF, the Parties have executed this Agreement on the day and year set forth below.

Under penalties of perjury, and pursuant to Sec. 92.525, Fla. Stat., Contractor declares that Contractor has read the Section 15 of the Standard Contract Addendum, Exhibit "A", and that the facts stated in it are true.

Southern Road and Bridge, LLC

Signature: 

By: Lucas L. Pappas

Its: Managing Member

Date: June 1st, 2026

City of St. Pete Beach:

Signature: _____

By: Frances Robustelli

Its: City Manager

Date: _____

APPROVED AS TO FORM
AND LEGAL SUFFICIENCY:

_____
Ralf Brookes
City Attorney

ATTEST:

_____
Renee Rose
City Clerk

EXHIBIT "A"

Standard Contract Addendum

(Place Standard Contract Addendum behind this page)

CITY OF ST. PETE BEACH, FLORIDA
STANDARD CONTRACT ADDENDUM

THIS STANDARD CONTRACT ADDENDUM is made and entered into this _____ day of _____, 2026, by and between the CITY OF ST. PETE BEACH, a Florida municipality, hereinafter referred to as the "City", and _____, hereinafter referred to as "Contractor", concerning that certain agreement dated the ____ day of _____, 2026 ("Agreement") and titled _____.

WITNESSETH:

WHEREAS, Section 119.0701, Fla. Stat., requires that certain public agency contracts must include certain statutorily required provisions concerning the contractor's compliance for Florida's Public Records Act; and

WHEREAS, Section 768.28, Fla. Stat., sets forth certain mandatory limitations on indemnification and liability for Florida public agencies; and

WHEREAS, Florida law requires that public agency contracts be subject to non-appropriation and thereby contingent upon appropriation during the public agency's statutorily mandated annual budget approval process; and

WHEREAS, Section 448.095, Fla. Stat., imposes certain obligations on public agencies with regard to the use of the E-Verify system by their contractors and subcontractors; and

WHEREAS, Section 287.133 and 287.135, Fla. Stat., provides restrictions on local governments contracting with companies that are on certain Scrutinized Companies lists or convicted vendor list; and

WHEREAS, additional terms required by Sections 282.3185(5) and (6) Fla. Stat. related to data management and Section 287.05701 Fla. Stat. related to social government and corporate activism are also added by virtue of this Addendum; and

WHEREAS, Section 286.101, Florida Statutes contains a list of "foreign countries of concern" including, the People's Republic of China, the Russian Federation, the Islamic Republic of Iran, the Democratic People's Republic of Korea, the Republic of Cuba, the Venezuelan regime of Nicolás Maduro, or the Syrian Arab Republic, including any agency of or any other entity under significant control of such "foreign country of concern". Any entity that does business with a state agency or political subdivision must disclose certain of their dealings with those "foreign countries of concern" to the Florida Department of Financial Services; and

WHEREAS, Section 787.06(13), Fla. Stat. provides that when a contract is executed, renewed, or extended between a nongovernmental entity and a governmental entity, the nongovernmental entity must provide the governmental entity with an affidavit signed by an

officer or a representative of the nongovernmental entity under penalty of perjury attesting that the nongovernmental entity does not use coercion for labor or services as defined in such statute;

NOW, THEREFORE, in consideration of the covenants set forth herein, the parties agree to this addendum as follows:

1. Amendment. This Addendum hereby amends and supplements the terms of the Agreement. In the event of a conflict between the terms of the Agreement and terms of the Addendum, the terms of the Addendum shall prevail.

2. Public Records Compliance. Contractor agrees that, to the extent that it may "act on behalf" of the City within the meaning of Section 119.0701(1)(a), Florida Statutes in providing its services under this Agreement, it shall:

(a) Keep and maintain public records required by the public agency to perform the service.

(b) Upon request from the public agency's custodian of public records, provide the public agency with a copy of the requested records or allow the records to be inspected or copied within a reasonable time at a cost that does not exceed the cost provided in this chapter or as otherwise provided by law.

(c) Ensure that public records that are exempt or confidential and exempt from public records disclosure requirements are not disclosed except as authorized by law for the duration of the contract term and following completion of the contract if the contractor does not transfer the records to the public agency.

(d) Upon completion of the contract, transfer, at no cost, to the public agency all public records in possession of the contractor or keep and maintain public records required by the public agency to perform the service. If the contractor transfers all public records to the public agency upon completion of the contract, the contractor shall destroy any duplicate public records that are exempt or confidential and exempt from public records disclosure requirements. If the contractor keeps and maintains public records upon completion of the contract, the contractor shall meet all applicable requirements for retaining public records. All records stored electronically must be provided to the public agency, upon request from the City's custodian of public records, in a format that is compatible with the information technology systems of the City.

(e) Pursuant to Section 119.0701(2)(a), Fla. Stat., **IF THE CONTRACTOR HAS QUESTIONS REGARDING THE APPLICATION OF CHAPTER 119, FLORIDA STATUTES, TO THE CONTRACTOR'S DUTY TO PROVIDE PUBLIC RECORDS RELATING TO THIS AGREEMENT, CONTACT THE CUSTODIAN OF PUBLIC RECORDS AT:**

Renee Rose
City Clerk/Public Records Custodian
cityclerk@stpetebeach.org

Phone: 727-363-9220
155 Corey Avenue
St. Pete Beach, FL 33706
Fax: 727-541-8040

3. Public Records Compliance Indemnification. Contractor agrees to indemnify and hold the City harmless against any and all claims, damage awards, and causes of action arising from the contractor's failure to comply with the public records disclosure requirements of Section 119.07(1), Florida Statutes, or by contractor's failure to maintain public records that are exempt or confidential and exempt from the public records disclosure requirements, including, but not limited to, any third party claims or awards for attorneys' fees and costs arising therefrom. Contractor authorizes the public agency to seek declaratory, injunctive, or other appropriate relief against Contractor in Pinellas County Circuit Court on an expedited basis to enforce the requirements of this section.

4. Compliance/Consistency with Section 768.28, Fla. Stat. Any indemnification or agreement to defend or hold harmless by City specified in the Agreement shall not be construed as a waiver of City's sovereign immunity, and shall be limited to such indemnification and liability limits consistent with the requirements of Section 768.28, Fla. Stat. and subject to the procedural requirements set forth therein. Any other purported indemnification by City in the Agreement in derogation hereof shall be void and of no force or effect.

5. Non-appropriation. City's performance and obligation to pay under this Agreement is contingent upon an appropriation during the City's annual budget approval process. If funds are not appropriated for a fiscal year, then the Contractor shall be notified as soon as is practical by memorandum from the City Manager or designee that funds have not been appropriated for continuation of the Agreement, and the Agreement shall expire at the end of the fiscal year for which funding has been appropriated. The termination of the Agreement at fiscal year end shall be without penalty or expense to the City subject to the City paying all invoices for services rendered during the period the Agreement was funded by appropriations.

6. E-Verify Compliance. By entering into this Agreement, the Contractor is obligated to comply with the provisions of Section 448.095, Fla. Stat. "Employment Eligibility," as amended from time to time. This includes but is not limited to register with and use the E-Verify System to verify the work authorization status of all newly hired employees, and requiring all subcontractors to provide an affidavit to Contractor attesting that the subcontractor does not employ, contract with, or subcontract with, an unauthorized alien. Contractor agrees to maintain a copy of such affidavit for the duration of this Agreement. Failure to comply with this paragraph will result in the termination of this Agreement as provided in Section 448.095, Fla. Stat., as amended and Contractor will not be awarded a public contract for at least one (1) year after the date on which the Agreement was terminated. Contractor will also be liable for any additional costs to the City as a result of the termination of this Agreement in accordance with this paragraph. Contractor affirmatively states, under penalty of perjury, that in accordance with Section 448.095, Fla. Stat., Contractor is registered with and uses the E-Verify system to verify the work authorization status of all newly hired employees, that in accordance with such statute, Contractor requires from each of its subcontractors an affidavit stating that the subcontractor does not employ, contract with, or

subcontract with an unauthorized alien, and that Contractor is otherwise in compliance with Sections 448.09 and 448.095, Fla. Stat.

7. Compliance/Consistency with Scrutinized Companies Provisions of Florida Statutes. Section 287.135(2)(a), Fla. Stat., prohibits a company from bidding on, submitting a proposal for, or entering into or renewing a contract for goods or services of any amount if, at the time of contracting or renewal, the company is on the Scrutinized Companies that Boycott Israel List, created pursuant to Section 215.4725, Fla. Stat., or is engaged in a boycott of Israel. Section 287.135(2)(b), Fla. Stat., further prohibits a company from bidding on, submitting a proposal for, or entering into or renewing a contract for goods or services over one million dollars ($1,000,000) if, at the time of contracting or renewal, the company is on either the Scrutinized Companies with Activities in Sudan List or the Scrutinized Companies with Activities in the Iran Petroleum Energy Sector List, both created pursuant to section 215.473, Fla. Stat., or the company is engaged in business operations in Cuba or Syria. Contractor hereby certifies that Contractor is not listed on any of the following: (i) the Scrutinized Companies that Boycott Israel List, (ii) Scrutinized Companies with Activities in Sudan List, or (iii) the Scrutinized Companies with Activities in the Iran Petroleum Energy Sector List. Contractor further hereby certifies that Contractor is not engaged in a boycott of Israel or engaged in business operations in Cuba or Syria. Contractor understands that pursuant to section 287.135, Fla. Stat., the submission of a false certification may subject Contractor to civil penalties, attorney's fees, and/or costs. Contractor further understands that any contract with City for goods or services of any amount may be terminated at the option of City if Contractor (i) is found to have submitted a false certification, (ii) has been placed on the Scrutinized Companies that Boycott Israel List, or (iii) is engaged in a boycott of Israel. And, in addition to the foregoing, if the amount of the contract is one million dollars ($1,000,000) or more, the contract may be terminated at the option of City if the company is found to have submitted a false certification, has been placed on the Scrutinized Companies with Activities in Sudan List or the Scrutinized Companies with Activities in the Iran Petroleum Energy Sector List, or has been engaged in business operations in Cuba or Syria.

8. Disclosure Requirements for "Foreign Countries of Concern". CONTRACTOR shall comply with the disclosure requirements set forth is Section 286.101 (3) (a), Fla. Stat., which requires "Any entity that applies to a state agency or political subdivision for a grant or proposes having a contract value of $100,000 or more shall disclose to the state agency or political subdivision any current or prior interest of, any contract with, or any grant or gift received from a "foreign country of concern" if such interest, contract, grant or gift received from a "foreign country of concern" if such interest, contract, grant or gift has a value of $50,000 or more and such interest existed at any time or such contract, grant or gift was received or in force at any time during the previous five (5) years. Such disclosure shall contain the name and mailing address of the disclosing entity, the amount of the gift or the value of the interest disclosed, the applicable "foreign country of concern" and, if applicable the date of termination of the contract or interest, the date of receipt of the grant or gift and the name of the agent or controlled entity that is the source or interest holder. Within one (1) year before applying for any grant or proposing any contract, such entity must provide a copy of such disclosure to the Department of Financial Services". Pursuant to Section 286.101(7), Fla. Stat.: "In addition to any fine assessed under [section 286.101(7)(a), F.S.], a final order determining a third or subsequent violation by an entity other than a state agency or political subdivision shall automatically disqualify the entity from

eligibility for any grant or contract funded by a state agency or any political subdivision until such ineligibility is lifted by the Administration Commission for good cause."

9. Venue and Jurisdiction. Notwithstanding any of other provision to the contrary, this Agreement and the parties' actions under this Agreement shall be governed by and construed under the laws of the State of Florida, without reference to conflict of law principles. As a material condition of this Agreement, each Party hereby irrevocably and unconditionally: i) consents to submit and does submit to the jurisdiction of the Circuit Court in and for Pinellas County, Florida for any actions, suits or proceedings arising out of or relating to this Agreement. Both parties waive any right to file an action, suit or proceeding in Federal Court or remove any action, suit or proceeding to Federal Court.

10. Attorneys' Fees and Costs. Notwithstanding any of other provision to the contrary, if litigation ensues regarding this Agreement, each party hereto shall bear its own attorneys' fee and costs.

11. Public Entities Crime or Convicted Vendor List. Contractor agrees and assumes a continuous duty to disclose to the City if the Contractor or any of its affiliates as defined by Section 287.133(1)(a), Florida Statutes are placed on the Convicted Vendor List or the Antitrust Violator Vendor List maintained by the Florida Department of Management Services.

12. Data Management; Notice of Breach. Contractor shall cooperate with the City and provide timely incident reporting, response activities/fact gathering, public and agency notification, severity level assessment, after-action reports, etc., which the City must report in accordance with Sections 282.3185(5) & (6), Florida Statutes in the event of a data breach.

13. Environmental and Social Government and Corporate Activism. The City has not given preference or requested documentation from the Contractor based on Contractor's social, political or ideological interest. Contractor agrees to similarly not request documentation or give preference to any subcontractor based on the subcontractor's social, political or ideological interests.

14. Taxes. The City shall not be liable for any taxes and assessments imposed by a federal, state or local governmental agency to the extent that the City is exempt from same by Florida law, including but not limited to any sales or use tax.

15. No coercion for labor or services. The Contractor swears under penalty of perjury that the Contractor does not use coercion for labor or services as defined as follows:

"Coercion" means:

1. Using or threatening to use physical force against any person;
2. Restraining, isolating, or confining or threatening to restrain, isolate, or confine any person without lawful authority and against her or his will;
3. Using lending or other credit methods to establish a debt by any person when labor or services are pledged as a security for the debt, if the value of the labor or services as reasonably assessed is not applied toward the liquidation of the debt, the length and nature of the labor or services are not respectively limited and defined;

4. Destroying, concealing, removing, confiscating, withholding, or possessing any actual or purported passport, visa, or other immigration document, or any other actual or purported government identification document, of any person;

5. Causing or threatening to cause financial harm to any person;

6. Enticing or luring any person by fraud or deceit; or

7. Providing a controlled substance as outlined in Schedule I or Schedule II of Sec. 893.03, Fla. Stat. to any person for the purpose of exploitation of that person.

16. Force Majeure. The City reserves the right to suspend, modify or terminate this contract in the event of an act of god or act of man beyond the control of the parties, including but not limited to a hurricane, tropical storm, tornado, or other destructive weather event, flooding, pandemic, plague, war, armed conflict, domestic or foreign terrorism, riot, labor condition, state or federal governmental action, and catastrophic Internet disturbance, making performance inadvisable, economically impracticable, illegal, or impossible.

17. Additional Terms. Notwithstanding any of other provision to the contrary, the parties agree as follows:

A. None.

IN WITNESS WHEREOF, the parties hereto have executed and delivered this instrument on the days and year indicated below and the signatories below to bind the parties set forth herein.

Under penalties of perjury, and pursuant to Sec. 92.525, Fla. Stat., Contractor declares that Contractor has read the foregoing Section 15 above and that the facts stated in it are true.

Contractor:

_____

Print Name: Lucas L. Pappas

Title: Managing Member

Company: Southern Road & Bridge, LLC

ATTEST:

_____

Renee Rose, City Clerk

City of St. Pete Beach:

_____

Frances Robustelli, City Manager

EXHIBIT "B"

Request for Bid/Proposal

(Place Request for Bid/Proposal behind this page)

City of St Pete Beach
Request for Proposal

Civil On Call Construction Services

Timeline	Date	Time
Publication of Bid	03/11/2026	8:00 AM
Pre-Bid Meeting	03/18/2026	10:00 AM
Deadline for Question Submission	03/25/2026	10:00 AM
Submittal Deadline electronically via Bonfire	04/08/2026	9:00 AM
Submittal Opening	04/08/2026	11:00 AM

Submittals are due on or before
04/08/2026 at 9:00 AM EST
Electronically Via Bonfire Only

TABLE OF CONTENTS

I. INVITATION 3
II. STATEMENT OF WORK 4
III. BID FORM 26
IV. GENERAL CONTRACT TERMS 27
V. REFERENCES & MINIMUM QUALIFICATIONS 38
VI. CONTRACTOR'S PROPOSAL SUBMITTAL 39
VII. PUBLIC ENTITY CRIMINAL AFFIDAVIT 40
VIII. NON-COLLUSION AFFADAVIT 42

I. INVITATION

The City of St Pete Beach has issued this Request for Proposal (RFP) to solicit competitive bids and proposals from Proposers for a Task Work Order driven Civil On-Call Construction Services Contract. The successful bidder shall provide all labor, materials, equipment, tools, consumables, transportation, and incidentals to provide Public Services capital improvement projects construction services on an 'as needed' basis for the City of St Pete Beach.

The types of projects that may be assigned under this Contract shall include, but not be limited to:

- intersection/roadway improvements
- drainage upgrades and/or installations
- ADA upgrades and pedestrian/bicyclist improvements
- sidewalk installations and upgrades
- alley improvements
- median modifications
- signing and pavement markings
- recreational trails
- signal upgrades and installations
- intelligent transportation systems (ITS) components upgrades

CONTACT INFORMATION
Procurement Manager – Sara Spain
Email – purchasing@stpetebeach.org

II. STATEMENT OF WORK

PART I: GENERAL REQUIREMENTS

1. SPECIAL CONDITIONS

A. **Local Preference, Location Points and Tie Breakers**

Location preferences do not apply due to the fact that some task orders may be funded with state or federal dollars.

B. **Minority Business Enterprise Policy**

Minority Business Enterprise Evaluation Criteria do not apply due to the fact that some task orders may be funded with state or federal dollars.

C. **Scrutinized Companies**

Scrutinized Companies with activities in Sudan List or activities in the Iran Petroleum Energy Sector List do not apply due to the fact that some task orders may be funded with state or federal dollars.

D. **Bonding and Credit**

Contractor/Vendor shall provide a letter of bondability showing their maximum bonding capacity.

E. **Contract Term**

This will be a three (3) year initial contract with the option to be extended for two (2) additional one (1) year periods upon mutual consent of both parties. It is the intent of the City of St Pete Beach to award these services to more than one Contractor/Vendor.

F. **Contract Pricing**

Contract prices for equipment and/or service will remain firm through the first three (3) contract years. Sixty (60) days prior to the contract renewal date, Contractor/Vendor may request a price adjustment. The price adjustment and justification must be submitted in writing, and be approved by the City. Said price increase may not, under any circumstances, exceed three (3) percent of the Construction CPI. No retroactive contract price adjustments will be allowed. If the Contractor/Vendor fails to submit a price adjustment within the sixty (60) days prior to the contract renewal date, current contract pricing will continue for the contract renewal period.

G. **Work Assignments**

All work to be performed shall take the following into consideration prior to assignment of any work to any Contractor/Vendor, at the discretion of the Procurement Manager:

1. **Estimated Cost < $250,000.00:**

The City retains the right to select any Contractor/Vendor to whom a multiple-award contract has been made when the opportunity to submit a quote for any job whose estimated cost is less than Two Hundred & Fifty Thousand Dollars ($250,000.00).

2. **Estimated Cost > $250,000.00 and < $500,000.00:**

The City shall obtain three (3) quotes from any Contractor/Vendor to whom a multiple vendor award has been made, for those jobs whose estimated cost is greater than Two Hundred & Fifty Thousand Dollars ($250,000.00) and less than Five Hundred Thousand Dollars ($500,000.00).

3. **Estimated Cost > $500,000.00:**
   a. The City retains the right to separately and competitively bid any and all projects whose cost estimates are greater than Five Hundred Thousand Dollars ($500,000.00). The determination will be made by the City Procurement Manager.
   b. Projects that exceed Five Hundred Thousand Dollars ($500,000.00) may not be sub-divided into separate projects in order to circumvent such requirement.

4. **Reassignment of Work:**

The City retains the right and authority to reassign work to another Contractor/Vendor, at any time, for the following reasons:

a. The lowest Contractor/Vendor cannot comply with the specifications in cases of an emergency.
b. The lowest Contractor/Vendor cannot respond to the job requirements, at the time, due to scheduling conflicts, staffing considerations or other reasonable cause(s) for preventing their completion of the task as required.
c. The City shall have the option to solicit additional quotes, bids, or even professional opinion about a particular job when in its best interest and could engage the services of another company/Contractor/Vendor. This exception will always require advanced written notice and explanation by the requesting City Department to the Procurement Manager, for approval, before authorizing any contemplated work to be done. The receipt of the approved purchase order shall be understood that all work is to immediately begin on the project, per the project schedule and needs as identified by the City and as agreed upon by the Contractor/Vendor.

5. **Cumulative Work shall not exceed $4,000,000.00:**

The cost of all work completed by a Contractor/Vendor shall not exceed Four Million Dollars ($4,000,000.00) in a calendar year. If all costs are expected to exceed this threshold, these services will need to be separately re-bid through issuance of a new set of bid specifications.

H. **Quotes**

1. The City will request a quote if and when needed. Vendors participating in the contract shall have ten (10) business days from written notification to respond to quotes, unless waived by the Procurement Manager. If work is an emergency, as determined by the City, vendors shall have (24) hours from email or phone notification to respond to quotes.
2. A Task Order Form will be provided to awarded Contractor/Vendor. A properly executed Purchase Order shall be issued for the work assignment and shall have the Task Order Form and all related paperwork attached as backup. The Purchase Order shall indicate the start and end dates for the project.
3. If the Contractor/Vendor does not wish to issue a quote for or cannot meet the requirements of the project, inclusive of the time given in which to complete the job; the Contractor/Vendor shall complete the Work Order Form by noting "No Quote" on the form itself and by also providing an explanation as to why they are not submitting a quote.
4. Final costs for any individual project shall not exceed the original approved and total cost for such project by more than ten percent (10%). Any and all anticipated project cost increases are subject to advanced approval by the Procurement Manager.
5. Any Contractor/Vendor that fails to submit a quote successively three (3) times in a row may have their contract cancelled due to non-performance.

I. **Notice to Proceed (NTP)**

All task orders $250,000.00 or less will use the purchase order as the Notice to Proceed (NTP). The start date and date or the number of day to complete the project must be included on the purchase order. If the start date is left off the purchase order then the date of the purchase order approval will default as the NTP start date. Projects over $250,000.00 will have a formal NTP issued through the Purchasing Division. All task orders must be reviewed by the Purchasing Division before a purchase order or NTP is issued.

J. **Liquidated Damages**

Liquidated damages will be assessed to the Contractor/Vendor/vendor for each consecutive calendar day completion of the project or work is delayed. The amount of liquidated damages will be dependent on the cost of the task order and will be calculated using the chart below.

Estimated Project Cost Over	Estimated Project Cost But Less than	Daily Charge Per Calendar Day
$0.00	$50,000.00	$960.00
$50,000.00	$250,000.00	$965.00
$250,000.00	$500,000.00	$1,245.00
$500,000.00	$2,500,000.00	$1,665.00
$2,500,000.00	$5,000,000.00	$2,715.00

K. **Project Spreadsheet Submittal**

Contractor/Vendor must submit a formal spreadsheet using the process below.

1. List of completed projects to include:
   a. Relevant project experience includes construction and delivery methods relevant to the type of project to be constructed utilizing the CM/GC method (or performing as a General Contractor/Vendor on similar types and sizes of projects).
   b. Describe no more than ten (10) and no less than five (5) projects in order of most relevant to least relevant (similar type of construction with a contract dollar amount of $500,000.00 or less) which demonstrates the firm's capabilities to perform such projects.
   c. For each project, the following information should be provided:
      i. Project name
      ii. Project location
      iii. Dates during which services were performed
      iv. Physical description (e.g. square footage, key components, site area)
      v. Brief description of Project Services performed by CM/GC or GC Firm.
      vi. Owners Information:
         a. Contact person
         b. Telephone number
         c. Email
         d. Project name
         e. Owner reference
         f. Original Contract Price
      vii. Amount of Change Orders by:
         a. Your Company
         b. Consultant
         c. Client/Entity
      viii. Final Project Price
      ix. Proposer should include a table with this information layout as follows:

Entity Name and Project Name	Contact Person Phone Email	Begin Project Amount	Change Orders by CMR	Change Orders by Engineer	Change Orders by Entity	Final Cost of Projects	Original Days for Construction	Final Construction Days

2. Any outstanding accomplishments of the firm that relates to the specific services being sought.

3. Any Quality Assurance and Value Engineering Programs should also be included.

2. STANDARD SPECIFICATIONS

The Project shall be constructed in accordance with these specifications, the Pinellas County Engineering Standard Details and the Florida Department of Transportation "Standard Specifications for Road and Bridge Construction", Latest Edition.

3. GOVERNING DOCUMENTS

The Specifications and all supplementary documents are essential parts of the Contract, and a requirement occurring in one is as binding as though occurring in all. They are intended to be complimentary and to describe and provide for a complete project. In case of discrepancy, calculated dimensions will govern over scaled dimensions.

The Contractor shall take no advantage of any apparent error or omission in the specifications. If the Contractor discovers such an error or omission, they shall immediately notify the Project Manager. The Project Manager will then make such corrections and interpretations as may be deemed necessary for fulfilling the intent of the specifications.

4. COOPERATION WITH OTHERS

The Contractor shall cooperate with the owners of any underground or overhead utilities in their removal and rearrangement operations in order that these operations may progress in a reasonable manner and that service rendered by these parties will not be interrupted.

A. Permits

1. City ROW Use Permit: The Contractor will obtain a Right of Way Use Permit from the City Permits Division located at 155 Corey Avenue, Florida. There will be no fee for this permit.
2. Public Services will require shop drawings, schedule, and the location of staging areas at the pre-construction meeting. Where the Contractor wishes to use private property, he shall obtain permission from the owner in writing and submit a copy at the first meeting.
3. The Contractor will be responsible for the requirements of all permits. There may be FDOT permits required for this project.

5. LINES, GRADES AND CONSTRUCTION SURVEYING

The Contractor shall lay out the work from the benchmarks, grades, dimensions, points and lines noted on the working drawings, established at the site, or supplied by the Project Manager. All work of every description shall be laid out and checked by the Contractor who will be held solely responsible for its correctness, and the Contractor shall pay for all expenses in connection with this work. The Contractor shall request clarification from the Project Manager of any errors, inconsistencies or omissions which they may discover. It is the Contractor's responsibility to review every street prior to milling and paving, including the inspection of overhead tree limbs, overgrown grass on pavement, manholes and gate valves.

The work may be checked by the Project Manager, and in the event of a discrepancy, their decision shall be final. No special compensation will be made to the Contractor to defray costs of any work or delays occasioned by making surveys and measurements, tests, or inspections, but such costs shall be considered as having been included in the price stipulated for the several items of work to be done under this Contract.

All attempts shall be made to protect existing property corner monumentation. The monumentation must be identified and marked prior to construction to ensure its permanency. All survey monuments, property corners, and benchmarks, which may be disturbed during construction, shall be referenced and replaced by the Contractor. All monuments and benchmarks disturbed or destroyed by the Contractor or any of his forces through accident or negligence shall be replaced by a Florida Licensed Professional Land Surveyor at the Contractor's expense. All survey markings shall be brought to the attention of the Project Manager.

6. MAINTENANCE OF DETOURS

The Contractor shall repair, at his expense, all potholes and other localized failures on streets which are used as detour routes to facilitate construction operations.

7. REPLACEMENT OF TRAFFIC, STREET SIGNS, SIGNAL LOOPS AND MAILBOXES

The Contractor shall remove and re-erect all existing traffic, street signs and mailboxes within the project site at his own expense for those which must be moved or relocated to permit construction operations.

The Contractor shall notify the City prior to disturbing any traffic signal loops and the City will install new traffic signal loops under a separate contract.

8. USE OF PREMISES

The Contractor shall confine all apparatus to the roadway or right-of-way in which the work is being performed and will not unreasonably encumber these premises with such apparatus, materials, supplies, and equipment. The Contractor shall promptly remove and dispose of all debris resulting from his operations.

9. PROSECUTION OF WORK/ LIQUIDATED DAMAGES

The Contractor shall begin work on any project/road no later than fourteen (14) calendar days after receipt of the "Notice to Proceed"; and shall diligently prosecute the same to project completion prior to the expiration of the total number of calendar days determined necessary for the project, from the date of said "Notice to Proceed".
Failure to complete each project within the determined number of calendar days shall cause the Contractor to be subject to the provisions for Liquidated Damages. The Contractor shall pay to the City as fixed liquidated damages for each calendar day of delay until the work is complete or accepted, and the Contractor and their sureties, jointly and severally, shall be liable for the amount thereof:

A. For each Task Work Order issued, the City project manager will determine the required number of days for completion of all work as well as the amount for liquidated damages, as appropriate.

B. Liquidated Damages will be assessed in accordance with Part I, 2. Special Conditions, J. Liquidated Damages of these bid specifications.

** Please refer to City of St Pete Beach Terms and Conditions, “Liquidated Damages, Penalties and Non-Conformance to Contract”

10. CONSTRUCTION SCHEDULE

A. Work shall be performed on an “as needed” basis for a **three (3) year contract period**. Upon mutual consent, this agreement may be extended for **two (2) additional one (1) year periods**, subject to the same terms and conditions and available funding being in place. No guarantee of volume or quantity of work is intended.

B. At the direction of the City of St Pete Beach, the Contractor will not be allowed to proceed with the scheduled work until restoration of preceding work areas are restored to the satisfaction of the City of St Pete Beach. It is the intent of this project to:

1. Start paving each street no later than three (3) working days after milling each street. If the street has not been paved after three (3) working days, a fee equal to the daily amount for liquidated damages indicated in Item #2J (above) will be assessed until the street has been paved. The time limit for streets to be paved where sewer manhole castings or water valve boxes need to be adjusted or replaced will be three (3) working days after the casting or water valve boxes have been adjusted or replaced.

2. Complete restoration including temporary striping and clean-up, shall be finished in no more than five (5) working days after the completion of paving activity and as directed by the City.

3. No work shall be done during the week between the hours of 9:00 PM and 6:00 AM, or between the hours of 9:00 PM and 9:00 AM on weekends or holidays; except for emergency work by a public service utility or by other permit approved by the City.
4. Night work may be established by the Contractor as regular procedure by obtaining the written permission of the City. Such permission may be revoked at any time by the City, if the Contractor fails to maintain adequate equipment and supervision for the proper execution, control, and safety of the work at night.

C. Work may need to be performed under more urgent timeline at the direction of the City of St Pete Beach. The Contract bid form includes pay items for Emergency Mobilizations for such occurrences. The Contactor shall respond to Emergency Work Requests within 24 hours and should expect to mobilize in less than 72 hours.

11. CONTRACTOR'S ACCEPTANCE OF CONDITIONS

The provisions of this Contract shall control any inconsistent provisions contained in the specifications. All Drawings and Specifications have been read and carefully considered by the Contractor, who understands the same, and agrees to their sufficiency for the work to be done.

It is expressly agreed that under no circumstances, conditions or situations shall this Contract be more strongly construed against the City than against the Contractor and his Surety.

Any ambiguity or uncertainty in the Drawings or Specifications shall be interpreted and construed by the Project Manager, or their designee, and their decision shall be final and binding upon all parties.

It is distinctly understood and agreed that the passing, approval and/or acceptance of any part of the work or material by the City, the Project Manager, or by any agent or representative as in compliance with the terms of this Contract and/or of the Drawings and Specifications covering said work, shall not operate as a waiver by the City of strict compliance with the terms of this Contract, and/or the Drawings and Specifications covering said work; and the City may require the Contractor and/or his surety to repair, replace, restore and/or make to
comply strictly and in all things with this Contract and the Drawings and Specifications any and all of said work and/or materials which within a period of one year from and after the date of the passing, approval, and/or acceptance of such work or material, are found to be defective or to fail in any way to comply with this Contract or with the Drawings and Specifications.

This provision shall not apply to materials or equipment normally expected to deteriorate or wear out and become subject to normal repair and replacement before the condition is discovered. The Contractor shall not be required to do normal maintenance work under the guarantee provisions. Failure on the part of the Contractor and/or his surety, immediately after notice to either repair or replace any such defective materials and workmanship, shall entitle the City, if it sees fit, to replace or repair the same and recover the reasonable cost of such replacement and/or repair from the Contractor and/or his surety, who shall in any event be jointly and severally liable to the City for all damage, loss and expense caused to the City by Reason for the Contractor's breach of this Contract and/or his failure to comply strictly and in all things with this Contract and with the Drawings and specifications.

12. HAZARDOUS MATERIALS

The Contractor shall be responsible for the independent inspection and certification of the removal, transportation and disposal of all identified and all unidentified hazardous materials located within the project site.

13. JOB CONDITIONS

A. The Contractor is to provide the City with a working schedule prior to commencing the project. The City reserves the right to revise and/or adjust the schedule accordingly.

B. City Notification**:** At least 72 hours in advance of closing, or partially closing, any street, alley, or other public thoroughfare, the Contractor shall notify the Engineering Division of the Public Services Department, and immediately notify the same agencies of the reopening.

C. Customer Notification**:** The City of St Pete Beach residents occupying a home on the street to be milled and paved shall be notified seven (7) days before the construction of the street begins. This is completed by the following:

1. A door hanger notice will be provided by the Department of Public Services. It shall contain the reason for the construction, the overall length of time with dates, any problems that may be encountered and other important information regarding the project. The Contractor is responsible for the installation of the door hanger notices no later than seven (7) working days before the construction of the street begins.

2. The Contractor shall hand this notice to each resident. If the resident is not available, the Contractor is to place the door hanger on the doorknob. In certain sensitive areas, usually business areas and as requested by the Engineer, each customer may be asked to sign a signature sheet with their name, address, and signature. The original shall be given to the Department of Public Services before any construction commences.

D. Utility Emergency Access**:** All fire hydrants, valves, water meters and backflow assemblies shall be free of all construction material and equipment and in plain view for easy emergency access or necessary maintenance by the City crews.

E. Pedestrian or School Crossings**:** Where the work crosses or interferes with school or pedestrian crossings, extreme care shall be taken by the Contractor to insure the safety of the school children or other pedestrians.

F. Temporary Staging Areas**:** The Contractor shall obtain all temporary construction staging areas approvals required and shall not encroach onto private property unless a written agreement has been made between the property owner and the Contractor; or onto public property unless a written agreement has been made and approval by the Purchasing Division's designee has been received prior to using the land. The Contractor shall assume full responsibility for the protection and safekeeping of materials stored at the staging areas.

G. Erosion Control**:** Prior to construction, all efforts for siltation/erosion control will be taken, including the use of turbidity screens, hay bales, and sod replacement at the earliest possible time prior to and after excavation/grading. Sediment/erosion controls should be used around drainage structures and any areas to mitigate erosion on or off the project site. The Contractor is responsible for any removal of asphalt debris in manholes or drainage structures.

H. Road Hauling**:** The existing paved roads in the City shall be used for transporting material required for construction of the project. The Contractor should be aware that any road that is damaged during construction due to truck/equipment involvement would be the responsibility of the Contractor to correct. The Contractor shall contact the City for specific routes to be used during construction.

I. Water on Street**:** All water shall be removed, and the streets dry prior to paving. No paving shall take place during a rainstorm event.

J. Towing of Vehicles**:** The City will remove any cars parked in the way of the resurfacing project as long as proper notification has been given as stated under Section 13.c. (above) of the Scope of Work.

K. Clippings**:** Where grass, tree roots or other vegetation has grown over or above the edge of the asphalt, it shall be removed to the existing edge of asphalt by the Contractor prior to paving the street.

L. City Utilities**:** If work by the Contractor results in damage to City owned utilities; the Contractor shall repair the damage immediately at no cost to the City. If the Contractor does not respond immediately to repair the damaged utility, the City Utilities Department will make the repair and bill the Contractor for the costs incurred.

M. Dumpsters**:** The City will relocate all dumpsters in the way of this project. The Contractor is to provide written notice to the City forty-eight (48) hours in advance when said dumpsters need to be moved.

N. Disturbed Areas**:** All areas disturbed by the construction shall be restored to a condition at least equal to the pre-construction conditions or to what shall be approved by the Project Manager.

O. Security**:** The Contractor shall be responsible for the site security and shall determine whether full time watchmen will be required. The Contractor shall inspect the area daily and take whatever measures necessary to protect the safety of the public, workmen and materials both day and night.

P. Brick/Driveways**:** The Contractor shall be responsible for the tack coat not being spread to the brick crosswalks, brick intersections, brick speed tables, driveways or other similar areas due to the hauling of the asphalt. These areas shall be covered with sand or other City approved material. If tack appears on these items from the Contract, it shall be the responsibility of the Contractor to remove it.

Q. Interference with Others**:** The Contractor shall coordinate with Pinellas Suncoast Transit Authority or any public agency to notify the agency of any and all potential disruption in service. The Contractor shall not interfere with materials, appliances, or workmen of the City, Private Utility Companies, or any other contractor, who may be performing work at the same sites. All contractors and other parties involved shall have equal rights as far as practicable, to the use of all roads and grounds, except as otherwise provided by these specifications. The decision of the Project Manager shall govern in cases of disagreement between contractors or other parties regarding such use.

R. Public Safety**:** The Contractor shall provide, erect, and maintain continually, seven days per week and twenty-four hours per day, all necessary barricades, reflectorized signs, signals, flashing lights, red lights, "danger" or "caution" or "street closed" signs, etc., and take all necessary precautions necessary for the protection of the work and the safety of the public. The Contractor shall also provide a watchman at all places where the work causes obstructions to normal traffic or constitutes in any way a hazard to the public.

S. Cleaning Up**:** The Contractor shall always keep the construction area clean from accumulation of waste material or rubbish, including storage areas. The Contractor shall remove any rubbish, tools, scaffolding, equipment and materials from and about the premises, which do not belong to the City, prior to completion of the work. The Contractor shall leave the work and premises, following the completion of work, in a clean and workmanlike condition satisfactory to the Project Manager or their representative.

T. Coordination of Details with the County Sheriff**:** Any traffic detour plan must be submitted by the Contractor for approval to the Engineer of Record, the Engineering Division of the Public Services Department and the Pinellas County Sheriff at least two (2) weeks prior to the implementation of said detour in order to provide adequate time for review. Detour plans must include all streets involved in the detour.

U. Maintaining Proper Drainage Flow**:** No drainage structure or paved waterway shall be blocked by the new pavement work. New pavement shall be feathered or tapered towards the inlet opening. This task is to be included as part of the paving operation and there shall be no separate payment for this work. Any debris entering the drainage structure during construction is to be removed by the Contractor.

V. Responsibility of the Contractor**:** The Contractor shall be entirely responsible and liable for all damage or injury as a result of his operations to all other adjacent public and private property, structures of any kind and appurtenances thereto met with during the progress of the work. The cost of protection, replacement in their original locations and conditions or payment of damages for injuries to such adjacent public and private property and structures affected by the work, whether or not shown on the drawings and the removal, relocation and reconstruction of such items called for on the drawings or specified shall be included in the various Contract Items and no separate payments shall be made thereof. Where such public and private property, structures of any kind and appurtenances thereto are not shown on the drawings and when, in the opinion of the Project Manager to avoid interference with the work, payment therefore will be made as provided for extra work in the Agreement. The Contractor is expressly advised that the protection of the buildings, structures, tanks, pipelines, and related work adjacent and in the vicinity of his operations, wherever they may be, is solely his responsibility.

W. Protection of Trees, Lawn & Sod**:** All trees, shrubs and sod shall be adequately protected by and in accordance with all ordinances governing the protection of the trees. No materials shall be placed so as to injure such trees, shrubs and sod. Trees, shrubs and sod destroyed by negligence of the Contractor or his employees shall be replaced by him with new stock of similar size and age, at its proper season and at the sole expense of the Contractor. Trees close to the work shall be protected against injury. The Contractor shall trim all branches and roots in the road that are necessary to complete the project and are liable to damage his operations, but in no case shall any tree be cut or removed without prior notification of the Project Manager. It is the Contractor's responsibility to inspect all roads that are to be milled and resurfaced. All injuries to bark, trunk, limbs, and roots of trees shall be repaired by dressing, cutting, and painting according to approved methods, using only approved tools and materials under the direction of City Staff. Lawn areas shall be left in good condition as before the starting of the work. Where sod has been removed shall be restored with new sod in a good workmanship manner approved by the resident or the Project Manager. The sod shall match existing grass and shall have no visible broad leaf weeds or foreign grasses. Water for the sod shall be supplied by the Contractor in sufficient quantities required to keep the grassed areas moist for a period of one month from the date of installation. The Contractor shall guarantee the satisfactory growth for a 90-day period.

X. Noise**:** The Contractor shall eliminate noise to as great an extent as practicable at all times. Air compressing equipment shall be equipped with silencers and the exhaust of all gasoline motors or other power equipment shall be provided with mufflers. In the vicinity of hospitals and schools, special care shall be used to avoid noise or other nuisances. The Contractor shall strictly observe all local regulations and ordinances covering noise.

Y. Access to Public Services**:** No materials used in the construction of the work shall be placed as to prevent free access to all fire hydrants, valves, manholes, driveways and roadways.

14. SUBSTITUTIONS

Whenever material or equipment are specified or described in the Contract documents by using the name of a proprietary item or the name of a particular supplier the naming of the item is intended to establish the type, function and quality required. Unless the name is followed by words indicating that no substitution is permitted, materials or equipment of other suppliers may be accepted by Project Manager if sufficient information is submitted by Contractor to allow Project Manager to determine that the material or equipment proposed is an approved alternate to that named. The procedure for review by the Project Manager will include the following as supplemented in the General Requirements. Requests for review of substitute items of material and equipment will not be accepted by Project Manager from anyone other than Contractor. If Contractor wishes to furnish or use a substitute item of material or equipment, Contractor shall make written application to Project Manager for acceptance thereof, certifying that the proposed substitute will perform adequately the functions and achieve the results called for by the general design, be similar and an approved alternate to that specified and be suited to the same use as that specified. The application will state that the evaluation and acceptance of the proposed substitute will not prejudice Contractor's achievement of Substantial Completion on time, whether or not acceptance of the substitute for use in the work will require a change in any of the contract documents (or in the provisions of any other direct contract with City for work on the Project) to adapt the design to the proposed work is subject to payment of any license fee or royalty. All variations of the proposed substitute from that specified will be identified in the application and available maintenance, repair and replacement service will be indicated. The application will also contain an itemized estimate of all costs that will result directly or indirectly from acceptance of such substitute, including costs of redesign and claims of other Contractors; affected by the resulting change, all of which shall be considered by Project Manager in evaluating the proposed substitute. The Project Manager may require Contractor to furnish at Contractor's expense additional data about the proposed substitute.

15. MINIMUM QUALIFICATIONS

The City has established minimum qualifications for Contractor expertise and experience regarding the subject project as follows:

A. The Contractor must provide a minimum of three (3) project references and may provide a maximum of five (5) project references for each of the five (5) criteria listed below.

B. Each project reference must have been successfully completed in the ten (10) years preceding the bid opening.

C. All criteria do not need to be satisfied by each submitted project reference, however, all criteria must have been satisfied two (2) times by the submitted project references.

D. Any project for which references are provided may have been self-performed with Contractor’s employees or performed by a subcontractor who is part of the Contractor’s team for this project.

E. The Contractor qualification requirements include the following:

1. Construction of site work including clearing, grubbing, and fine grading.
2. Construction of flexible and rigid pavement roadways, alleys, and trails.
3. Construction of sidewalk and ADA accessibility improvements.
4. Construction of stormwater utility upgrades.

5. Construction of signal, lighting, and intelligent transportation system (ITS) component upgrades.

[END OF PART I]

PART II: PROGRESS MEETINGS

1. **FREQUENCY**

Progress meetings will be held every other week or less, with the first meeting fourteen (14) days after the pre-construction meeting or fourteen (14) days or less after the date of the Notice to Proceed.

The City has the right to hold called meetings as required by the progress of the work.

2. **ATTENDANCE**

The following people should attend progress meetings, as applicable:

- Project Manager
- City Inspector Contractor
- Subcontractors as appropriate to the Agenda Suppliers as appropriate to the Agenda Others as appropriate

3. **PROGRESS SCHEDULE**

The Contractor shall submit a detailed schedule before work is to be started. It shall indicate the sequence of the work, the time of starting and completing each part.

4. **SUGGESTED AGENDA**

- Review approval of minutes of previous meetings. Review of work progress.

Field observations, problems, and conflicts. Problems which impede the construction schedule. Review of off-site fabrication, delivery schedules.

- Corrective measures and procedures to regain projected schedule, if necessary. Revisions to construction schedule.
- Progress schedule during succeeding work period. Coordination of schedules.
- Review submittal -- expedite as required. Maintenance of quality standards.
- Pending changes and substitutions. Shop drawing submittals.
- Review proposed changes for:
  Effect on construction schedule and on completion date. Effect on other contracts of the project.
  Other business

[END OF PART II]

***P*ART III: TECHNICAL SPECIFICATIONS**

1. GENERAL

Furnish all necessary labor, equipment, and materials to construct various types of public services infrastructure projects as outlined in Part I General Requirements, 1. Introduction.

Tasks may involve milling existing asphaltic concrete surfaces to specified depths. Excess milled material should be transported to an asphalt reprocessing plant. The streets specified should be surfaced with Superpave asphaltic concrete mix. Additionally, tasks include necessary adjustments or replacements of existing structures, traffic control, sweeping, cleanup, placement of painted and thermoplastic pavement markings, and installation of curb, gutter, and sidewalks.

2. MOBILIZATION

A. The Contractor is solely responsible for providing security for all materials stored on- site during the construction activities.
B. The Contractor shall provide ten (10) calendar days notification to the Engineer prior to initiating mobilization to the site and initiating work. The Contractor will also provide copies of all permits that have been obtained to the engineer prior to initiating work associated with such permits.
C. The Contractor shall restrict their operations to the designated work area and ensure that construction activities do not disrupt normal operational activities of the City's services.

D. The Contractor is responsible for visually inspecting the site to note obstructions or access difficulties.

E. The Contractor is responsible for providing and/or maintaining access to the work site to facilitate all construction, inspection and testing activities.

F. The contractor shall deliver/post notifications to affected citizens and business owners seven (7) calendar days prior to construction. A form of the notification must be approved by the City prior to distribution.

3. MILLING

A. Furnish all necessary labor, equipment and materials to mill pavements as specified, and haul the milled material to the reprocessing plant.

B. The methods used for milling shall meet all applicable portions of Section 327 - Milling of Existing Asphalt Pavement, Florida Department of Transportation Standard Specifications for Road and Bridge Construction, latest revision.
C. All manhole castings and water valve boxes shall be adjusted and/or replaced by the Contractor, as specified, after milling is completed.

D. When the full street is required by these documents to be milled, the desired finished cross slope is to be 2%.

E. The unit price per square yard (SY) shall be full compensation for all work required to perform the milling, loading, hauling, sweeping, clean-up, and all incidentals necessary to complete the work specified in this section.

F. Milling of existing asphalt speed humps and speed tables is required as specified in the plans.

4. CONCRETE CURB AND GUTTER (INSTALLATION)

A. All Concrete Curb and Gutter work shall conform to the requirements of Section 520, "Concrete Gutter, Curb elements and Traffic Separator," of the FDOT Standard Specifications and placed in conformity with the lines, grades, dimensions and notes shown in the contract plans.

B. Forms for this work shall be made of either wood or metal and shall have a depth at least equal to the Plan vertical dimensions for the depth of the concrete being deposited against them. They shall be straight and free from warp or bends and of sufficient strength and rigidity, when staked, to resist the pressure of the concrete without deviation from line and grade. If wooden forms are used, they shall be of a cross-section approved by the Project Manager and shall have a flat surface on top. The Contractor shall use flexible forms for all curb and gutter constructed on a radius.

C. Excavation shall be to the required depth, and the foundation material upon which these items are to be placed shall be compacted as specified in Section 120-9, "Compaction Requirements" of the FDOT Standard Specifications.

D. The concrete shall be placed in the forms and tamped and spaded in place so that all honeycombs will be eliminated, and sufficient mortar brought to the surface. The top of the section shall be floated smooth, and its edges rounded to the radius shown on the plans. No concrete shall be placed during unfavorable weather conditions.

E. Except for machine placed concrete, at the option of the Contractor, joints may be formed by the use of dummy joints (either formed or sawed) or by the use of sheet metal templates. If sheet metal templates are used, they shall be at least as long as the depth of the curb section. They shall be set perpendicular to the top and face of the curb form and shall be held firmly in place during the placing of concrete. Templates shall remain in place until the concrete has set sufficiently to hold its shape, but shall be removed while the forms are still in place.

For machine placed concrete, unless an alternate method is approved by the Project Manager, contraction joints shall be sawed. The joints shall be sawed as soon as the concrete has hardened to the degree that excessive raveling will not occur and before uncontrolled shrinkage cracking begins.

Contraction joints shall be spaced at intervals of ten feet (10') except where a lesser interval is required for closure, but no section shall be less than four feet (4') in length. On medians and traffic separators, cuts shall align across from each other. Cuts shall also align with contraction joints of sidewalks adjacent to the curb.

Expansion joints shall be constructed at all structures, at all ends of curb returns, except that expansion joints shall not be constructed within twenty (20) feet of an island nose. They shall be located at intervals of 500 feet between other expansion joints or ends of a run. The expansion joint filler shall be ½ inch in width and shaped to the cross section of the curb.

F. The forms shall be removed within twenty-four (24) hours after the concrete has been placed, and minor defects then filled with mortar composed of one part of Portland cement and two parts of fine aggregate. Plastering will not be permitted on the face of the curb or the gutter. Any rejected curb and gutter shall be removed and replaced at no additional cost to the City. All exposed surfaces shall be given a brush finish while the concrete is still green. For any surface areas, however, which are too rough or where other surface defects make additional finishing necessary, the Project Manager may require that the curb be rubbed to a smooth

surface with a soft brick or wood block, with water used liberally. Also, if necessary further to provide a suitable surface, the Project Manager may require additional rubbing, using a thin grout or mortar, either of which additional rubbing shall be at no additional cost to the City.

G. When surface finishing is completed, the curb and gutter shall be cured per applicable paragraphs of Section 520-8, of the FDOT Standard Specifications.

H. After the concrete has set sufficiently, but not later than three (3) days after pouring, the spaces in front and back of the curb and gutter sections shall be refilled to the required elevation, with suitable material, adequately compacted. In sections where sidewalk is to abut the curb, the backfill shall be placed and compacted to a suitable depth for the placing of sidewalk forms. In all other sections of the work, the back of the curb shall be backfilled to the required elevation with suitable material, which shall be placed and thoroughly compacted in layers of not more than six inches (6") in thickness.

I. Where a base is to be constructed adjacent to a curb and gutter, the curb and gutter shall be properly backfilled and shall set for a period of not less than seven (7) days before any base material is placed against it.

J. The top and face of the finished curb and gutter shall be true and straight, and the top surface of curbs shall be uniform width, free from humps, sags, or other irregularities. When a straightedge ten feet (10') long is laid on the top or face of the curb or on the surface of gutters, the surface shall not vary more than 0.01 foot from the edge of the straightedge, except at grade changes or curves.

K. Full compensation for conforming to the requirements of this Section shall be considered as included in the unit price paid per linear foot (LF) for constructing concrete curb, curb and gutter, or valley gutter, complete in place and accepted, and no additional compensation will be allowed therefore.

5. CONCRETE SIDEWALKS (INSTALLATION)

A. All Concrete Sidewalk work shall conform to the requirements of Section 522, "Concrete Sidewalks and Driveways", of the FDOT Standard Specifications and these Special Provisions and placed in conformity where so ordered by the Project Manager.

B. Forms for this work shall be made of either wood or metal and shall have a depth at least equal to the Plan vertical dimensions for the depth of concrete being deposited against them. They shall be straight, free from warp or bends, and of sufficient strength and rigidity, when staked, to resist the pressure of the concrete without deviation from line and grade. If wooden forms are used, they shall be of cross-section approved by the Project Engineer and shall have a flat surface on top. The Contractor shall use flexible forms for all headers constructed on a radius.

C. Tree roots within the sidewalk area shall be removed to a minimum depth of one foot (1') below the specified subgrade surface. If a contractor must cut tree roots, sharp cuts shall be made. All roots greater than 2” shall be cut clean with a hand saw. The contractor shall hand dig near the roots and saw the roots, heavy mechanical equipment shall not be used. Broken roots shall be sawed 2” behind the ragged end. Roots smaller than 2” may be cut with a sharp-edged hand tool. Crushed or torn roots are more likely to allow decay. Sharply cut roots produce a flush of new roots helping the tree to recover from its injury. If tree roots larger than 6” must be cut, the Contractor shall inform the City Engineer or his representative prior to cutting for field direction. All boulders, organic material, soft clay, spongy material and any

other objectionable material shall be removed and replaced with material approved by the Engineer.

Before placing the forms for sidewalks, the surface upon which they are to be built shall be brought to the specified line, grade and elevation and uniformly compacted to a minimum 85 percent of AASHTO T-99 density. The materials shall be compacted at a moisture content such that the specified density can be uniformly attained. If necessary to attain the specified density, water shall be added to the material, or the moisture content shall be lowered by manipulation or allowing the material to dry, as is appropriate.

Fill areas including cut areas under the sidewalk which have been excavated more than six inches (6") below the bottom of sidewalk shall be compacted to a minimum of 95 percent of AASHTO T-99 density. The area to be compacted is defined as that area directly under the sidewalk and one foot (1') beyond each side of the sidewalk when right-of-way allows.

D. Transverse expansion joints shall be placed at intervals not exceeding eighty feet (80'), and at all places where a walk intersects or abuts a curb, driveway, building, other sidewalk or fixed objects. Expansion joints shall be constructed at each side of structures and at ends of curb returns, except that expansion joints shall not be constructed within twenty feet (20') of an island nose. Expansion joints shall be filled with ½ inch thick premolded joint filler conforming to the provisions in Section 932 of the Standard Specifications. The joint filler shall be shaped to the cross section of the sidewalk, shall extend from the surface to the subgrade, and shall be at right angles to the sidewalk surface.

   Contraction joints shall be sawed and shall be at intervals of four (4) to six (6) feet, or as shown on the plans. A slot approximately 3/16 inches wide and not less than 1 ½ inches deep shall be cut with a concrete saw after the concrete has set, and within twenty-four (24) hours of concrete being poured. Open type joints shall not be allowed.

E. Just prior to placing the concrete, the subgrade shall be moistened. The concrete shall be placed in the forms and tamped and spaded in place so that all honeycombs will be eliminated and sufficient mortar brought to the surface. Thereafter, the surface shall be brought to a smooth even finish by means of a wooden float. No concrete shall be poured during unfavorable weather conditions.

F. The concrete shall be given a broom finish. The top of the finished sidewalk shall be true and straight, and the top surface of sidewalks shall be uniform width, free from humps, sags, or other irregularities. When a straightedge ten feet (10') long is laid on the top of the sidewalk the surface shall not vary more than 0.01 foot from the edge of the straightedge, except at grade changes or curves.

G. When surface finishing is completed, the sidewalk shall be cured per applicable paragraphs of Section 520-8, of the Standard Specifications. After concrete has set sufficiently, but no later than three (3) calendar days after pouring, the space alongside the sidewalk shall be backfilled, compacted and sodded or seeded as shown on the striping plans.

H. Full compensation for conforming to the requirements of this Section shall be considered as included in the unit price paid per Square Yard for constructing sidewalks, complete in place and accepted, and no additional compensation will be allowed therefore.

6. LEVELING/RESURFACING

A. **Material:**

1. The material used for leveling shall be Superpave asphaltic concrete.

2. The material used for resurfacing shall be Superpave asphaltic concrete. Friction Course mixes may be used as specified by the City Project Manager.

B. **Construction Requirements:**

1. The leveling and resurfacing shall commence within three (3) working days after the milling of each street. The time limit for streets where castings or other water valve boxes need to be adjusted or replaced will be three (3) working days after the casting or water valve box has been adjusted or replaced.

2. The methods used for re-paving shall meet all applicable portions of Section 330 - Hot Mix Asphalt General Construction Requirements, Florida Department of Transportation Standard Specifications for Road and Bridge Construction, latest revision.
3. The Contractor shall contact all utility and TV cable companies for location of their facilities. The exact location of their facilities, type of material used by the utility and TV cable, etc. shall be determined by the Contractor prior to any excavation work required by this Contract.

4. The Contractor shall be responsible for the protection of all pavements, sidewalks, and other improvements within the work area. All damage to such improvements, as a result of the Contractor's operations, beyond the limits of the work of pavement replacement as described herein, shall be repaired by the Contractor at the Contractor's expense.

5. Testing by City: Testing may be completed by an independent testing laboratory. If core borings are done to determine thickness and density, the Contractor is responsible for filling these holes in the pavement.

C. **Quality Control:**

1. The Contractor shall have a Quality Control Technician who has been certified by the State of Florida Department of Transportation as a Certified Asphalt Plant Technician, available at the asphalt plant at all times the Contractor is producing asphalt mix for use on this project.

2. The Contractor's quality control procedures, inspection and tests shall be documented, and that information shall be available for review by the Project Manager or his representative, throughout the course of the Contract.

3. The mix design shall meet the requirements of Section 334-3.2 for the type of Superpave asphalt indicated in the plans as set forth in Florida Department of Transportation Standard Specifications for Road and Bridge Construction, latest revision. Friction course asphalt concrete must meet the requirements of Section 337 for the type of friction course indicated in the plans. Submit a Notarized Certification of Specification Compliance letter on company letterhead to the Engineer stating that all material produced and placed on the project was in substantial compliance with the specifications. The City may run independent tests during the project to determine the acceptability of the material.

7. UTILITY ADJUSTMENTS & REPLACEMENTS

A. **Adjusting Existing City Valve Boxes:**

1. The Contractor is to provide the necessary equipment to adjust the castings without damaging the existing structure. Adjustment would include being able to screw the top portion of the valve box up or down. Water valves that cannot be adjusted either up or down must be replaced under Section 6.2. If the structure is damaged, the Contractor is to replace the structure to its original condition at their cost.

2. The materials and construction methods for this work shall conform to applicable portions of Section 425 Inlets, Manholes and Junction Boxes, Florida Department of Transportation Standard Specifications for Road and Bridge Construction, latest revision.

3. The quantities to be paid for under this section shall be for the number of valve boxes, adjusted physically.

4. Structures, sections of structures, valve box sections or other items necessary for adjustment that are considered debris and that has been removed by the Contractor as part of the progress of work shall be removed from the project site by the Contractor at the end of each day's work. The Contractor is to remove all debris deposited in the structure as a result of the work performed.

B. **Castings:**

1. The Contractor shall notify the Project Manager or his representative on any questions regarding the prior adjustment or replacement of manhole frames or valve boxes.

2. Manhole frame and covers and valve boxes to be replaced are to be furnished by the Contractor.

3. Castings damaged by construction shall be replaced at no additional cost to the City of St Pete Beach.
4. All castings shall be adjusted and replaced in accordance with the manufacturers recommended requirements.

5. Adjusted or replaced castings shall be set at the grade of the proposed asphalt after compaction with not more than ¼" variation in 10 feet.

8. STRIPING AND MARKINGS

A. **Temporary Striping**: Temporary traffic stripes and markings will be required. Temporary markings shall be placed immediately after milling on any arterial/collector roads or within the immediate proximity of a school, and immediately after final asphalt on all roads. Before opening any re-paved area to traffic, temporary markings shall be applied as specified by the Project Manager. The paint used for this work shall be in accordance with the FDOT specification.

B. **Permanent Striping**: The Contractor shall place permanent traffic stripes and markings in accordance with reference points and alignment gathered by the Contractor prior to milling or overlay or in accordance with striping plans provided by the City of St Pete Beach. The Contractor shall use an Alkyd/Maleic thermoplastic compound and application methods meeting the requirements of Section 711 – Thermoplastic Pavement Markings, Florida Department of Transportation Standard Specifications for Road and Bridge Construction, latest revision. The thermoplastic compound shall be extruded on the pavement surface in a molten state by mechanical means with surface application of glass spheres, and upon cooling

to ambient pavement temperature shall produce an adherent pavement marking of the specified thickness and width and capable of resisting deformation.

C. A minimum of 21 days curing time after asphalt placement shall be allowed before the placement of any thermoplastic marking commences, with all thermoplastic markings to be completed within 28 days after asphalt placement.

D. The color of the thermoplastic shall be white, yellow, or blue as specified by the M.U.T.C.D.; and revisions thereof.

9. CLEANUP AND DUST CONTROL

A. The Contractor shall furnish and operate a minimum of one (1) mechanical sweeper for the purpose of removal of loose milled material. After milling and before resurfacing, the Contractor shall water the streets as necessary to prevent dust nuisance from his operations or from traffic.

B. Upon completion of the work on each street and before acceptance, the Contractor shall remove all surplus and discard materials and rubbish; shall restore in an acceptable manner all property, both public and private, which has been damaged during the prosecution of the work and shall leave each street in a neat and presentable condition throughout the entire length of the work under Contract. This shall include, but not be limited to the overspray of tack, and shall be completed within one (1) week after the resurfacing of each street.

C. Failure of the Contractor to comply with the Project Manager cleanup orders may result in an order to suspend work until the condition is corrected. No additional compensation will be allowed as a result of such suspension.

D. 5% of the value of the work performed may be retained, should at the opinion of the City, restoration not be completed.

E. The cost of all work regarding Cleanup and Dust Control shall be included in the prices for other pay items, which are included in the Contract.

F. The Contractor shall reflect in the schedule, which shall be approved prior to construction, the time required for complete restoration. The Contractor shall strictly adhere to the schedule.

G. The Contractor shall take the necessary measures to prevent siltation and other construction related materials including tack coatings from entering storm inlet structures and manhole structures during the road repaving operation.

10. TRAFFIC CONTROL, STREET CLOSURES, DETOURS AND BARRICADES

A. The Contractor shall comply with all applicable portions of Section 102 – Maintenance of Traffic – Florida Department of Transportation Standard Specifications for Road and Bridge Construction, latest revision, and City requirements for traffic control.

B. The Contractor shall furnish all necessary barriers, lights, signs, and flag persons, to advise the public of detours and construction hazards. All flag persons on site shall be properly qualified.

C. The Contractor shall be responsible for compliance with additional public safety requirements, which may be ordered by the Project Manager or his authorized representative.

D. Failure of the Contractor to comply with the public safety requirements may result in an order to suspend work until the condition is corrected. No additional compensation will be allowed as a result of such suspension.

E. The Contractor shall furnish and install, and upon completion of the work, promptly remove all signs and warning devices.

11. SODDING

A. **Description:** All sodding shall conform to the requirements of Section 570, FDOT Manual on Road and Bridge Construction, latest revision.

B. **Materials:**

1. **Sod:** Sod shall be Argentine Bahia as determined by the Project Engineer. Where sodding will adjoin, or be in sufficiently close proximity to, private lawns, other types of sod may be used if desired by the affected property owners and approved by the Project Engineer. The sod shall be taken up in commercial-size rectangles, preferably 12-inch by 24-inch or larger. Maximum allowable deviation from the standard widths and lengths shall be five percent (5%). Broken pads and torn or uneven ends will not be acceptable. The sod shall be sufficiently thick to secure a dense stand of live grass. The sod shall be live, fresh and uninjured, at the time of planting. It shall have a uniform soil thickness of three-fourths inch (3/4"), plus or minus one-fourth inch (1/4"), at the time of cutting. Measurement for thickness shall exclude top growth and thatch. The soil mat shall adhere firmly to the roots such that it will not break, crumble, or tear during handling and placing. No muck or heavy peat soil grown sod will be accepted. All sod shall be 97% free of weeds and other grasses. All sod shall comply with State and Federal laws with respect to inspection for plant diseases and insect infestation. An inspection certificate, required by law, may be requested by the Project Engineer for each shipment. All sod shall be placed as soon as possible after being dug and shall be shaded and kept moist from the time it is dug until it is planted. No sod which has been cut for more than 48 hours may be used unless specifically authorized by the Project Engineer.

2. **Commercial Fertilizer:** All commercial fertilizers shall comply with the State fertilizer laws. All fertilizers shall be uniform in composition, free flowing and suitable for application by mechanical spreader equipment. The chemical designation of the fertilizer shall be 12-8-8 or equivalent ratio. At least 50% of the phosphoric acid shall be from normal super phosphate or an equivalent source which will provide a minimum of two units of sulfur. The amount of sulfur shall be indicated on the quantitative analysis card attached to each bag or other container.

3. **Water:** The water may be obtained from any approved spring, pond, lake, stream or municipal water system. The water shall be free of excessive and harmful chemicals, acids, alkalies, or any substance which might be harmful to plant growth or obnoxious to traffic. Salt water shall not be used. The Contractor shall pay for all water used for the installation of sod.

C. **Construction Methods:**

1. **Soil Moisture:** Rough and fine grading shall be carefully executed to ensure that the final placed sod will conform to existing grades, free of depressions, “bird baths” or

bumps. The area on which sod is to be placed shall contain sufficient moisture for optimum results. During periods of high temperature and after all unevenness in the soil surface has been corrected, the soil shall be lightly irrigated immediately prior to laying the sod. Muddy soil shall not be created.

2. **Placing Sod:** The first row of sod shall be laid in a straight line with subsequent rows placed parallel to and tightly against each other. Lateral joints shall be staggered to promote more uniform growth and strength. Care shall be exercised to ensure that the sod is not stretched or overlapped and that all joints are butted tight in order to prevent voids which would cause air drying of the roots. The sod shall form a solid mass. The sod shall be firmly embedded by light tampering and rolling to ensure contact with the subgrade and to provide a smooth, even surface to eliminate voids under the root system making dry spots. The sod shall be staked on all slopes of 2:1 or steeper with pegs or similar material, driven through the sod blocks, six inches (6") into firm earth at suitable intervals.

3. **Watering:** The sod shall be watered with a fine spray immediately after placing, such that the underside of the new sod pad and soil immediately below the sod are thoroughly wet. The sod shall be kept in moist condition for the duration of the contract period (and in no case less than 4 weeks except in dry season it shall be 8 weeks). The moistened condition shall extend to at least to the full depth of the rooting zone. Water shall not be applied between the hours of 10:00 a.m. and 6:00 p.m.

D. **Maintenance:** The Contractor shall, at no additional expense to the City, maintain the sodded areas in a satisfactory condition until final acceptance of the project. Such maintenance shall include the filling, leveling, and repairing of any washed or eroded areas, as deemed necessary by the Project Engineer. The Project Engineer, at any time, may require resodding of any areas in which the establishment of the grass stand does not appear to be developing satisfactorily. The Contractor shall mow lawns as soon as there is enough top growth to cut with mower set at height of two inches (2") and shall repeat mowing as required throughout the duration of the project, to maintain such height. The Contractor shall not delay mowing until grass blades bend over and become matted and shall not mow when grass is wet.

E. **Measurement and Payment:** Full compensation for conforming to the requirements of this Section shall be considered as included in the unit price paid per square yard (SY) for furnishing, placing, maintaining and replacing sod, complete in place and accepted, and no additional compensation will be allowed therefore.

[END OF PART III]

SECTION 01425
FDOT STANDARDS REFERENCE

PART 1 GENERAL

1.01 Section Includes

Instruction on the use and applicability of FDOT standards on the project

1.02 Requirements

A. The Florida Department of Transportation, Standard Specifications for Road and Bridge Construction, latest non-metric edition ("Standard Specifications"), and Standard Plans for Road Construction, latest non-metric edition ("Standard Plans") are referenced herein as source documents for applicable technical specifications and construction details to be used in the construction of this project. The term “latest edition” refers to the latest edition implemented by FDOT and includes all FDOT implemented supplements at the time of bid advertisement.

B. Method of Measurement and Basis of Payment is to be in accordance with the Florida Department of Transportation Standard Specifications. Any item which is detailed in the Plans and for which material types, sizes and quality are also called out, the "Standard Plans" shall take preference over the plan detail unless otherwise directed by the Engineer.

C. Where the FDOT Standard Specifications use the reference "Department", replace "Department" with "Owner", except for when such reference is to Department Standards and evaluation criteria.

D. The Standard Plans are referenced herein as a source document for applicable construction items and details called for in the plans for which a specific plan detail is not provided. The Contractor shall construct the items called for in the plans in accordance with the "Standard Plans" unless otherwise defined or detailed in the plans or as directed by the Owner, Engineer or authorized representative.

E. The Standard Plans are available for download from the FDOT website at: https://www.fdot.gov/design/standardplans

F. In case of conflict, the Technical Specifications takes precedence over FDOT specifications for a particular construction requirement.

G. Copies of the latest implemented edition and implemented supplements of the Florida Department of Transportation Standard Specifications are available for download from the FDOT website at: https://www.fdot.gov/programmanagement/Implemented/SpecBooks

H. The Contractor shall inform the Owner and Engineer in writing of any specification that the Contractor feels is ambiguous or conflicting with other plan notes and details prior to the construction of the associated item. The Engineer will determine which information is to be used for construction. The Contractor is responsible for the removal and replacement of any item improperly constructed resulting from a misinterpretation of the specifications at no additional cost to the Owner.

PART 2 PRODUCTS - Not Used

PART 3 EXECUTION

3.01 General

The Contractor shall use Divisions Two (II) and Three (III) of the FDOT Specifications as they relate to methods of construction and material types and quality for the appropriate construction items contained within this project.

END OF SECTION

III. BID FORM

See attached Excel document.

IV. GENERAL CONTRACT TERMS

REQUEST FOR PROPOSALS
Civil On Call Construction Services

REQUEST FOR PROPOSAL SUMMARY
The City of St Pete Beach has issued this Request for Proposal (RFP) to solicit competitive bids and proposals from Proposers for a Task Work Order driven Civil On-Call Construction Services Contract. The successful bidder shall provide all labor, materials, equipment, tools, consumables, transportation, and incidentals to provide Public Services capital improvement projects construction services on an 'as needed' basis for the City of St Pete Beach.

The "City" intends to **award multiple contracts** to vendors who can provide the best value for services. Vendors may submit proposals for all, some, or only one of the requested line items or categories. **It is not mandatory to submit a proposal for every item listed**. A bidder may bid on any, all, or none of the items. The "City" reserves the right to select multiple vendors to optimize cost-efficiency and capability across different segments of the project. Proposals will be evaluated based on capability, cost, and capacity to perform the specific line items requested.

PROPOSAL SUBMITTALS
Proposal documents must include a signed/notarized Contractor's Proposal Submittal, Bid Form, References, Contractor's license and insurance certificates, and Public Entity Criminal Affidavit. The Contractor shall submit electronic proposals only. Bidders must submit electronically only through Bonfire platform. When bidding electronically, only one copy should be submitted.

Proposals shall include the following:

- A signed and notarized Proposer's Contract Proposal.
- Current proof of insurance certificate.
- A list of references and minimum qualifications as outlined in Section V.
- One copy of bid electronically submitted to Bonfire platform.

The City is not responsible for any Addendums or other supplementary information that is not received due to non-submittal of the aforementioned information. Please refer back to the city website (http://www.stpetebeach.org/news-and-links/city-projects.html) for additional project information as it becomes available. The City reserves the right to decide whether to answer addendums or not. The City is not required to provide any additional information.

Proposers or persons wishing to submit a proposal on this project shall be licensed, and insured in accordance with the City's requirements

The City of St. Pete Beach reserves the right to reject any or all proposals or parts of proposals, or accept any proposal or part thereof deemed to be in the best interests to the City of St. Pete Beach.

Electronic proposals must be submitted by **9:00 AM on April 08, 2026 (Deadline),** clearly marked as: **"Civil On Call Construction Services."**

PRE-PROPOSAL MEETING
An optional pre-proposal meeting will be held on **March 18, 2026 at 10:00 AM EST** via Microsoft Teams conference/Teleconference. Please contact the City's Procurement Manager (purchasing@stpetebeach.org) for a meeting invitation and instructions.

WRITTEN REQUESTS FOR INTERPRETATIONS/CLARIFICATIONS
No oral interpretations will be made to any firms as to the meaning of the scope of work or any other

contract documents included in this **RFP.** All questions pertaining to the terms and conditions or scope of work of this Request for Proposal **(RFP)** must be sent in writing via email only to the City Procurement Manager (purchasing@stpetebeach.org) and shall be received no later than **10:00 AM EST on March 25, 2026.** Responses to questions may be handled as an Addendum if the response would provide clarification to the requirements of the **RFP**. All such Addenda shall become a part of the contract documents. The City will not be responsible for any other explanation or interpretation of the proposed **RFP** made or given prior to the award of the contract. The City will not respond to questions received after the specified deadline. The City reserves the right to respond to any and all questions but is not required to do so. If the Proposer discovered the opportunity through the online platform (Bonfire), do not submit questions through these platforms. **Only questions emailed directly to the City Procurement Manager will be answered.**

BEGINNING DATE
The Proposer shall, within ten (10) business days after receipt of the Notice of Award and before commencement of any operations hereunder, execute the Agreement. Additionally, the Proposer shall, within twenty (20) business days after receipt of the Notice of Award, provide all required documentation to the City.

COMPLETION OF WORK
The work will be completed on an as-needed basis. Each location that needs to be surveyed, repaired and/or worked on will constitute it's own "job". This will be a three (3) year initial contract with the option to be extended for two (2) additional one (1) year periods upon mutual consent of both parties. It is the intent of the City of St Pete Beach to award these services to more than one Contractor/Vendor.

COSTS INCURRED BY PROPOSERS
All expenses involved with the preparation and submission of proposals to the City, or any work performed in connection therewith, shall be borne solely by the Proposers. No payment will be made for any responses received or for any other effort required of or made by; the Proposer's prior to contract commencement.

ORAL PRESENTATION
The City may require an oral presentation of the proposal at the Evaluation Committee's discretion. This could also include a formal interview of any and all members of the Proposer's contract management staff.

CONFLICT OF INTEREST
The Proposer represents that it presently has no interest and shall acquire no interest, either direct or indirect, which would conflict in any manner with the performance or services required hereunder, as provided for in FL Stat. 112.311. The Proposer further represents that no person having any interest shall be employed for said performance.

The Proposer shall promptly notify the City's representative, in writing, by certified mail, of all potential conflicts of interest for any prospective business association, interest, or other circumstance, which may influence or appear to influence the contractor's judgment or quality of services being provided hereunder. Such written notification shall identify the prospective business association, interest or circumstance, the nature of work that the Proposer may undertake and request an opinion of the city as to whether the association, interest or circumstance would, in the opinion of the City, constitute a conflict of interest if entered into by the Proposer. The City agrees to notify the Proposer of its opinion by certified mail within thirty days of receipt of notification by the Proposer.

LATE PROPOSAL OR MODIFICATIONS
Modifications in writing received prior to the time set for the proposal submittal will be accepted. Proposal modifications received after the time set for the proposal submittal will not be considered.

RELATED PARTIES AND MULTIPLE PROPOSALS

Where two (2) or more related parties each submit a proposal or multiple proposals are received from (1) Proposer, for any such contract, such proposals shall be judged non-responsive. Related parties mean Proposers or the principles thereof, which have a direct or indirect ownership interest in another Proposer for the same contract or in which a parent company or the principles thereof where one (1) Proposer has a direct ownership interest in another Proposer for the same contract.

RIGHT TO AUDIT
The City of St. Pete Beach reserves the privilege of auditing a Proposer's record as such records relate to purchases or work between the City and said Proposer. Records should be maintained for three years from contract date.

VARIANCE FROM STANDARD TERMS & CONDITIONS
All standard terms and conditions stated throughout the RFP apply to this contract except as specifically stated. This should be fully understood by Proposers prior to submitting a proposal.

ASSIGNMENT
The Proposer shall perform this contract. No assignment or subcontracting shall be allowed without prior written consent of the City. If a Proposer intends to subcontract a portion of this work, the Proposer must disclose that intent in the proposal. In the event of a corporate acquisition and/or merger, the Contractor shall provide written notice to the City within thirty (30) business days of Proposer's notice of such action or upon the occurrence of said action, whichever occurs first. The right to terminate this contract, which shall not be unreasonably exercised by the City shall include but not be limited to, instances in which a corporate acquisition and/or merger represent a conflict of interest or are contrary to any local, state, or federal laws. Action by the City awarding a proposal to a firm that has disclosed its intent to assign or subcontract in its response to the RFP, without exception shall constitute approval for purpose of this Agreement.

LOBBYING Lobbying of Evaluation Committee members, City employees, or elected officials regarding request for proposals, request for qualifications, bids or contracts, during the pendency of bid award or bid protest, by the bidder/proposer/protestor or any member of the bidder's/proposer's/protestor's staff, an agent of the bidder/proposer/protestor, or any person employed by any legal entity affiliated with representing an organization that is responding to the request for proposal, request for qualification, bid or contract, or has a pending bid protest is strictly prohibited either upon advertisement or on a date established by the City and shall be prohibited until either an award is final or the protest is finally resolved by the City Manager or Procurement Manager; provided, however, nothing herein shall prohibit a prospective bidder/proposer from contacting City departments to address situations such as clarification and/or questions related to the procurement process. For purposes of this provision, lobbying activities shall include but not be limited to, influencing or attempting to influence action or non-action in connection with any requests for proposal, request for qualification, bid or contract through direct or indirect oral or written communication or an attempt to obtain goodwill of persons and/or entities specified in this provision. Such actions may cause any request for proposal, request for qualification, bid or contract to be rejected.

ADDITIONAL REQUIREMENTS
The City reserves the right, by change order, to unilaterally add or delete locations/services, either collectively or individually, at the City's sole option, at any time after award has been made as may be deemed necessary or in the best interest of the City. In such case, the Proposer will be required to provide or reduce services to this contract in accordance with the terms, conditions, and specifications.

SERVICES AGREEMENT
A written agreement incorporating the RFP and the successful proposal will be prepared by the City, signed by the successful Proposer, and presented to the City Commission for approval and signature.

INTEGRITY OF REQUEST FOR PROPOSAL DOCUMENTS
Proposers shall use the original RFP forms provided within the RFP and enter information in the spaces where a response is requested. Proposers may use an attachment as an addendum to the RFP forms if sufficient space is not available on the original form for the Proposer to enter a complete response. Any modifications or alterations to the original RFP documents by the Proposer, whether intentional or otherwise, will constitute grounds for rejection of the RFP. Any such modifications or alterations a Proposer wishes to propose must clearly be stated in the Proposer's RFP response and presented in the form of an addendum to the original RFP documents.

RESPONSIBILITY OF THE CITY MANAGER OR DESIGNEE
The term "City Manager or designee" wherever used in this Contract shall be the City of St. Pete Beach or its duly authorized representative. Notices of any change in the City Manager or designee shall be given in writing by the City to the Contractor. The City Manager or designee shall have full authority to interpret the contract and requirements and shall determine acceptance of the work under this Contract and every question relative to the fulfillment of the terms and provisions therein. It shall be the duty of the City Manager or designee to enforce the contract terms in a fair and unbiased manner.
If a variation from any requirements is allowed, the City Manager or designee shall grant the same in writing with the reasons for his action outlined, and such action will not invalidate or change the Contract in any other manner.

EXAMINATION OF SITE
Proposer shall carefully examine project site and be familiar with the work required for the project, investigate all site conditions that may affect execution of work as detailed in the construction documents. Contact the City's Procurement Manager or their designee for changes or alterations before proceeding.

ASSURANCES
The responding Proposer shall provide a statement of assurance that the Proposer is not presently in violation of any statutes or regulatory rules that might have an impact on the firm's operations. All applicable laws and regulations of the State of Florida, and ordinances and regulations of the City of St. Pete Beach will apply.

ASSIGNMENT AND TRANSFER OF CONTRACT
The Proposer shall not assign or transfer this Agreement or any part thereof or any interest therein without consent in writing of the City and the Proposer's Surety, and any such assignment or transfer without such written consent shall be null and void.

SUBCONTRACTS
The Proposer shall not subcontract this Agreement or any part thereof or any interest therein without consent in writing of the City and the Proposer's Surety. Any Subcontractor approved by the City will be subject to the same standards and qualifications as stated in this Contract.

PAYMENT
Payment shall be made to the Proposer for work performed under this Contract for the quantities of work as determined in accordance with Payments for Work Completed and Payments Withheld of this Contract. Payment for extra work will be made in accordance with the Changes in Work, Contract Amount, and Contract Time sections below.

PERIOD OF PERFORMANCE
The target completion for the base Scope of Services is January 2027, corresponding to delivery of the Design-Build Readiness Package. The City reserves the right, at its sole discretion and subject to funding

availability, to amend this Agreement to extend the Consultant's services through final (100%) design. Any additional services shall be authorized by written amendment and negotiated in accordance with the Consultants' Competitive Negotiation Act (Section 287.055, Florida Statutes).

CHANGES IN THE WORK

Without invalidating the Contract, the City may, at any time or from time to time, order additions, deletions or revisions in the work authorized by written Change Orders or directives. Upon receipt of a Change Order, the Proposer will proceed with the work involved. All such work shall be executed under the applicable conditions of the Contract documents. If any Change Order causes an increase or decrease in the Contract Amount or any extension or shortening of the Contract Time, an equitable adjustment will be made.

Additional Work performed by the Proposer without authorization of a Change Order will not entitle them to an increase in the Contract Amount or any extension of the Contract Time, except in the case of an emergency (subject to approval by City Manager or designee).

It is the Proposer's responsibility to notify their Surety of any changes affecting the general scope of the Work or change of the Contract Amount and the amount of the applicable bonds shall be adjusted accordingly, and an amended bond document furnished to the City. In the event the City directs the Proposer to make a change in the Work, and if the City and the Proposer do not arrive at a mutually acceptable increase or decrease in the Contract Amount, the Proposer shall not use any such lack of mutual acceptance as a basis or cause to stop or otherwise delay the progress or the execution and completion of any of the work ordered, directed or required pursuant to the Contract Documents.

If the Proposer believes an event or situation has occurred which justifies a change in the Contract Amount or Contract Time, they shall deliver a written notice to the City Manager or designee. Each such written notice shall be delivered promptly and no later than fifteen (15) business days after the Proposer first discovered the occurrence. The Proposer shall be deemed to have waived the right to collect any and all costs incurred more than fifteen (15) business days prior to the date of delivery of the written notice and shall be deemed to have waived the right to seek an extension of the Contract Time with respect to any delay in the Progress Schedule which accrued more than fifteen (15) business days prior to the date of delivery of the written notice.

Any such notice shall include sufficient detail to explain the basis of entitlement to a claim for an adjustment to the Contract Amount of Contract Time. When requested by the City Manager or designee, the Proposer shall furnish any additional information and details as may be required to determine the facts or allegations involved, which shall be provided within fifteen (15) business days of the request unless a longer time period is allowed by the City Manager or designee.

The Proposer shall prepare proposals detailing proposed adjustments to Contract Amount and/or Contract Time and submit them to the City Manager or designee within fifteen (15) business days of the City's issuance of a proposed Change Order or the Proposer's submitting a written notice of a change or claim for an adjustment to the Contract Amount or Contract Time. Proposer's proposals shall be irrevocable for a period of at least sixty (60) business days after receipt by the City. Any delay in the submittal of a complete, adequate and acceptable proposal will not justify an increase in Contract Amount or Contract Time. Proposer agrees that it shall give the City access to any and all of Proposer's and Subcontractors' books, records and other materials relating to proposed Change Orders and other claims for adjustment to Contract Amount or Contract Time.

CHANGE OF CONTRACT AMOUNT

The Contract Amount constitutes the total compensation payable to the Proposer for performing the Work. All duties, responsibilities and obligations assigned to or undertaken by the Proposer shall be at his expense

without change in the Contract Amount. The Contract Amount may only be changed by written Change Order issued by the City. Any claim for an increase in the Contract Amount shall be in writing and delivered to the City Manager or designee within fifteen (15) business days of the occurrence of the event giving rise to the claim.

All claims for adjustment in the Contract Amount shall be determined by the City Manager or designee. However, no claim for an adjustment to the Contract Amount will be considered for unforeseeable causes that were beyond the fault or negligence of the Proposer or his Subcontractors or supplier such as acts of God, floods, riots, etc. This restriction does not restrict submission of claims for additional Contract Time due to events of this nature. Any change in the Contract Amount shall be incorporated in a Change Order.

Proposer proposals or claims shall cover all aspects of the Work involved and shall be fully documented and itemized as to all costs, quantities and charges for overhead and profit. Amounts for Subcontractors or Suppliers at any tier shall be similarly supported. When determining Subcontractors' costs, the methods to be used shall be those used for the Proposer's costs, except that the term "Subcontractor" shall replace the term "Proposer," context permitting.

The value of any Work covered by a Change Order or of any claim for an increase or decrease in the Contract Amount where the Work involved is covered by unit prices contained in the Contract Documents shall be determined by application of unit prices to the quantities of the items involved. If the quantities originally contemplated are so changed in a proposed Change Order, that application of the Unit Prices to the quantities proposed will cause substantial inequity to the City or the Proposer, the applicable unit price(s) shall be equitably adjusted by mutual agreement.

If the value of work covered by a Change Order cannot be established or mutually agreed to utilizing previously established unit rates, the value shall be determined by the City on the basis of an estimate of the out-of-pocket cost and percentages that are acceptable to the City for overhead and profit.

In such case, the Proposer will submit in the form prescribed by the City an itemized cost breakdown together with supporting data.

The amount of credit to be allowed by the Proposer to the City for any such change which results in a net decrease in cost, will be the amount of the actual net decrease as determined by the City. When both additions and credits are involved in any one change, the combined overhead and profit shall be figured on the basis of the net increase, if any.

CHANGE OF CONTRACT TIME

The Contract Time may only be changed by written Change Order. Any claim for an extension in the Contract Time shall be in writing and include an analysis of the Progress Schedule as further described in the Specifications and shall be delivered to the City Manager or designee within fifteen (15) business days of the occurrence of the event giving rise to the claim. All claims for adjustment in the Contract Time shall be determined by the City Manager or designee. Any change in the Contract Time resulting from any such claim shall be incorporated in a Change Order. The Contract Time may be extended for an amount equal to time lost due to unforeseeable causes beyond the control of the Proposer (and his Subcontractors and Suppliers) if he makes a claim therefrom. Such delays shall include, but not be restricted to, acts or neglect by any separate Proposer employed by the City; fires; floods; labor disputes; epidemics; or acts of God.

All time limits stated in the Contract Documents are of the essence to the Contract. The stated time limits are agreed to be adequate to complete the work, including the procurement, manufacture and delivery of all material and equipment required, and account for any and all potential impact, delays, disruptions and costs that may be expected.

PAYMENTS FOR WORK COMPLETED
All payments under this agreement shall comply with the requirements of Florida Statutes, Section 215.422, commonly referred to as the "Prompt Payment Law." This includes timely processing of invoices and adherence to statutory interest provisions for late payments. The Contractor shall submit detailed invoices for services rendered under this agreement. Each invoice must include: Purchase Order or Contract Number, Description of services provided, Dates of service, Total amount due. Payment will be made within 45 days of receipt of a proper invoice and acceptance of deliverables, as required by Florida law. If payment is not made within the statutory timeframe, interest penalties will apply in accordance with Section 215.422, Florida Statutes. Payments will be issued via electronic funds transfer (EFT) unless otherwise agreed in writing. Contractor must provide accurate banking information to facilitate EFT.

PAYMENTS WITHHELD
The City Manager or designee may withhold, or, on account of subsequently discovered evidence, nullify the whole or part of any estimate to such extent as may be necessary to protect the City from loss on account of:

a) Defective work not remedied

b) Claims and/or liens filed or reasonable evidence indicating probable filing of claims

c) Failure of the Proposer to make payments properly to Subcontractors or for labor

d) A reasonable doubt that the Contract can be completed for the balance then unpaid

e) Damage to another Proposer

f) Failure of the Proposer to keep their work progressing in accordance with their time schedule

FINAL PAYMENTS
Upon the completion and acceptance of the work, the City Manager or designee shall issue a certificate that designates that the whole work provided for in this Contract has been completed and accepted by him under the conditions and the terms thereof and shall make the final estimate of the work. After issuance of the certificate, the entire balance found to be due the Proposer, including said retained percentage by the City in accordance with existing state laws as may be retained lawfully by said City, shall pay excepting such sums to the Proposer.

Before the approval of the final payment, the Proposer shall submit evidence satisfactory to the City that states that all payrolls, materials, bills and outstanding indebtedness in connection with this Contract have been paid.

LIENS
If at any time there shall be evidence of any lien or claim for which the City might become liable and which is chargeable to the Proposer, the City shall have the right to retain out of any payment then due or thereafter to become due, an amount sufficient for complete indemnification against such lien or claim. In the event the City has already paid to the Proposer all sums due under this contract or the balance remaining unpaid is insufficient to protect the City, the Proposer and his Surety shall be liable to the City for any loss so sustained.

RESPONSIBILITY OF THE CITY MANAGER OR DESIGNEE
The term "City Manager or designee" wherever used in the Contract shall be the City of St. Pete Beach or its duly authorized representative. Notices of any change in the City Manager or designee shall be given in writing by the City to the Proposer. The City Manager or designee shall have full authority to interpret the Plans and Specifications and shall determine the amount, quality, and acceptance of the work and supplies

to be paid for under the Contract and every question relative to the fulfillment of the terms and provisions therein. It shall be the duty of the City Manager or designee to enforce the Plans and Specifications in a fair and unbiased manner. If a variation from any requirements is allowed the City Manager or designee shall grant the same in writing with the reasons for his action outlined, and such action will not invalidate or change the Contract in any other manner.

LICENSES AND PERMITS

The Proposer shall obtain and pay for all necessary City licenses and work permits and shall faithfully comply with all laws, ordinances and regulations, (Federal, State or local) which may be applicable to the operations to be conducted hereunder, except for those permits obtained by the City. Notwithstanding the provisions above, the Proposer is responsible for non-compliance of all permit requirements, including all fines resulting from Proposer's non-compliance of said requirements.

Chapter II, Section II-4, "Registration of Licenses Obtained From Other Municipalities:" "Persons, partnerships, corporations, or other business entities doing business with the City who are not required to obtain a City occupational license, but who must have either a State or County or Municipal occupational license from another municipality, shall register such occupational license with St. Pete Beach Community Development Department. The City may charge a fee for such registration." The Proposer shall be responsible for obtaining all City, County, State and Federal permits required by those government agencies and must provide documentation of receipt of those permits prior to project commencement. This shall include a notice to commence work letter and the applicable fee, if required. Any sub-contractor hired by the Proposer awarded the project, MUST also register their license with the City.

LABOR PROVISIONS

The Proposer and his Subcontractors shall discharge, whenever ordered to do so by the City Manager or designee, any employee who is disorderly or whose conduct in the opinion of the City Manager or designee is detrimental to the prosecution of the work. No person whose age or physical condition is such as to make this employment dangerous to his/her health and safety or to the health and safety of others shall be employed on the work, and in no event shall any persons under the age of sixteen (16) years be employed. The State of Florida prevailing wage law requires that the Proposer shall fully comply with all provisions contained in Section 215.19, "Schedule of Prevailing Wage Rates for Specified Public Construction." The wage rates set forth by such determination shall apply to this project.

INSURANCE

The Proposer shall procure and maintain at his/her own expense, during the life of the Contract, liability insurance as hereinafter specified. All such insurance shall be subject to the approval of the City for adequacy of protection and shall include a provision preventing cancellation without twenty (20) business days prior notice to the City in writing. The City shall be included as an additional insured on all liability insurance. The liability insurance required is as follows: Proposer's General Public Liability and Property Damage Insurance issued to the Proposer and protecting the Proposer from all claims for personal injury, including death, and all claims for destruction of or damage to property, arising out of or in connection with any operations under this Contract, whether such operations be by the Proposer or by any Subcontractor hired by the Proposer or anyone directly or indirectly employed by the Proposer or hired by the Proposer.

The successful Proposer shall supply and maintain insurance which defends, indemnifies and holds harmless the City of St. Pete Beach, its officers, employees and agents from and against any and all liability, damage claims, demands, costs, judgments, fees, attorney's fees or loss arising directly out of acts or omissions hereunder by the Proposer or third party under the direction or control of the Proposer. Such general and excess liability coverage shall be primary to any other coverage carried by the City of St Pete Beach. Proposer must furnish the City with Certificate of Insurance prior to commencement of work. An

approved Certificate of Insurance furnished by the Proposer's carrier to guarantee the Proposer being insured with the City of St Pete Beach must be named as a certificate holder for this contract. The following minimum coverage:

- Professional Liability Insurance $2,000,000 each occurrence.
- Commercial General Liability Insurance $1,000,000.00.
- Comprehensive General Liability Insurance of $1,000,000.00 each occurrence.
- Personal Injury for $1,000,000.00 each occurrence.
- Automobile Liability $1,000,000.00.
- General Workers Compensation Insurance as required by Florida law.
- Longshore Harbor Workers Compensation Insurance

PROTECTION OF WORK AND PROPERTY
The Proposer shall continuously maintain adequate protection of all their work and materials from damage or theft and shall protect the City's property and all adjacent property from injury or loss arising in connection with activities under their Contract. The Proposer shall make good any such damage, injury, or loss, except such as may be caused by agents or employees of the City.

The Proposer shall take, use, provide, and maintain all necessary precautions, safeguards, and protection to prevent accidents, or injury to persons or property on, about, or adjacent to the site of the work. Should the situation arise that physical security is needed the Proposer will provide security on off days and holidays. The Proposer shall be responsible for all charges incurred with such action.

The Proposer shall post danger signs warning against any hazards created by the work being done under their Contract. They shall designate a responsible member of their organization on the work, whose duty shall be the prevention of accidents, and the name of the person so designated shall be reported to the City Manager or designee and City in writing. In an emergency affecting the safety of life, or of the work or adjoining property, the Proposer, without special instruction or authorization from the City Manager or designee, or City, is hereby permitted to act, at their own discretion, to prevent such threatened loss or injury, and they must take such action if so instructed or authorized by the City Manager or designee. The Proposer shall also protect adjacent property as required by law.

PROPOSAL REVIEW AND CONTRACT AWARD
Failure to submit all documents requested at the time of proposal may deem the Proposer's proposal ineligible for award. The City of St. Pete Beach reserves the right to reject any or all proposals or parts of proposals. The contract shall be awarded by written notice to the responsible and responsive Contractor whose proposal is determined in writing to be the most advantageous to the City, taking into consideration the price and other criteria set forth in this request for proposals. The City may waive any informality.

LOCAL, STATE AND FEDERAL COMPLAINCE REQUIREMENTS
The laws of the State of Florida do apply to any purchase made under this Request for Proposal. Proposers shall comply with all local, state, and federal directives, orders and laws as applicable to their proposal and subsequent contracts include but not limited to Equal Employment Opportunity, Minority Business Enterprise, and OSHA as applicable to this contract.

Compliance with Fla. Stat. 448.095:

- Proposer agrees to comply with all applicable portions of Fla. Stat. 448.095. Proposer must use the

U.S. Department of Homeland Security's E-Verify System, hhttps://e-verify.uscis.gov/emp, to verify the employment eligibility of all employees hired on or after January 1, 2021 during the term of this Agreement.

- Subcontractors (i) Proposer shall also require all subcontractors performing work under this Agreement to use the E-Verify system for any employees they may hire during the term of this Agreement. (ii) Subcontractors shall provide Proposer with an affidavit stating the subcontractor does not employ, contract with, or subcontract with an unauthorized alien, as defined by Fla. Stat. 448.095 (iii) Proposer shall provide a copy of such affidavit to the City upon receipt and shall maintain a copy for the duration of the Agreement.

- Proposer must provide evidence of compliance with Fla. Stat. 448.05 by January 1, 2021. Evidence may consist of, but is not limited to, providing notice of Proposer's E-Verify number.

- Failure to comply with this provision is a material breach of the Agreement, and the City may choose to terminate the Agreement at its sole discretion. Proposer may be liable for all costs associated with the City securing the same services, inclusive, but not limited to, higher costs for the same services and proposal costs (if necessary). Any challenge to termination under this provision must be filed in the Circuit Court no later than 20 calendar days after the date of termination. If this agreement is terminated for a violation of the statute by the Proposer, the Proposer may not be awarded a public agreement for a period of 1 year after date of termination.

RESERVES THE RIGHT

The City reserves the right to accept or reject any and/or all proposals, to waive irregularities and technicalities, and to request re-submission. If only one proposal is received by the proposal date and time listed, the proposal may or may not be rejected by the City depending upon proposal review and the needs of the City.

The City reserves the right to select a firm with or without additional interviews and may decide to select any of the firms submitting proposals. The City reserves the right to award the contract to a responsible proposer submitting a responsible proposal, with a resulting negotiated agreement which is most advantageous and in the best interest of the City.

Proposers, Proposers, their agents, and associates shall not contact or solicit any City Commission member, City employee, or official regarding this RFP during any phase of the proposalding process. Failure to comply with the provision may result in disqualification of the Proposer, at the option of the City. Only that individual listed, or an approved designee, as the contact person for this RFP shall be contacted.

SUBMITTAL WITHDRAWAL

After submittals are opened, corrections or modifications to submittals are not permitted, but a responding firm may be permitted to withdraw an erroneous submittal prior to the award by the City Commission, if the following is established:

- That the responding firm acted in good faith in submitting the submittal;
- That in preparing the submittal there was an error of such magnitude that enforcement of the submittal would work severe hardship upon the respondent;
- That the error was not the result of gross negligence or willful inattention on the part of the respondent;
- That the error was discovered and communicated to the City within twenty-four (24) hours of submittal opening, along with a request for permission to withdraw the submittal; or
- The responding firm submits documentation and an explanation of how the error was made.

CONE OF SILENCE
Respondents to this solicitation or persons acting on their behalf may not contact, between the release of the solicitation and the end of the 72-hour period following the agency posting the notice of intended award, excluding Saturdays, Sundays, and state holidays, any employee or officer of the executive or legislative branch concerning any aspect of this solicitation, except in writing to the procurement officer or as provided in the solicitation documents. Violation of this provision may be grounds for rejecting a response.

TERMINATION
The resulting contract may be canceled by the City when:

- Sufficient funds are not available to continue its full and faithful performance of this contract.
- There is sub-standard or non-performance of contract.
- The City wishes to terminate at any time and for any reason, upon giving thirty (30) days prior written notice to the other party.

The resulting contract may be canceled by either party in the event of substantial failure to perform in accordance with the terms by the other party through no fault of the terminating party.

FISCAL NON-FUNDING

If funds for the requested services described herein are not appropriated via the annual budget adoption process, the City reserves the right to cancel this Agreement immediately upon written notice to the vendor.

PROJECT RECORDS
The awarded firm shall maintain auditable records concerning the procurement to account for all receipts and expenditures, and to document compliance with the Contract. These records shall be kept in accordance with generally accepted accounting methods, and the City of St. Pete Beach reserves the right to determine the record-keeping method in the event of non-conformity. These records shall be maintained for three (3) years after final payment has been made and shall be readily available to City personnel with reasonable notice, and to other persons in accordance with the Florida Public Disclosure Statutes. Additionally, the awarded firm shall abide by and comply with Florida Statutes regarding public records. Specifically, the firm shall be aware of the provisions found in Section 119.0701, Florida Statutes.

Upon completion of the project, all reports, studies, recommendations, forms, and other project specific information will need to be submitted in paper and in an electronic file format (.PDF, .JPEG) on CD or USB storage device.

V. REFERENCES & MINIMUM QUALIFICATIONS

Provide at least three (3) or more professional, business references with which you have contracted to provide similar services in the past five (5) years. Include the name of the person, its organization, telephone number, fax number, and e-mail address. Include any governmental agencies, with the same contact and descriptive information for which you have provided similar service within the past five (5) years.

Provide a brief description of the history and capabilities of the firm. Describe the types of projects or services the firm performs/has performed and the dollar value of each. Provide information regarding your firm's ability to complete this project. Demonstrate that the firm's personnel have experience with similar projects.

Identify all unresolved and ongoing claims and disputes against your firm in excess of $500,000. Include any claims against the principals of your firm or any claims your company may have against a third party. Provide a history of litigation, including the outcomes, for the past five (5) years.

The responding firm shall provide a statement of assurance that the firm is not presently in violations of any statutes or regulatory rules that might have an impact on the firm's operations. All applicable laws and regulations of the State of Florida and ordinances and regulations of the City of St. Pete Beach will apply.

Provide the overall bonding capacity for the company and provide a history of any claims against the Proposer's previous bonds for the past five (5) years.

The City shall be the sole final judge of qualifications of Proposer to perform service and reserves the exclusive right to accept or reject any proposal as it deems to be in the best interests of the City. The City reserves the right to make such investigation, as it deems necessary, to determine the ability of any proposer to perform the work or service requested. Failure to comply with the requirements of this section may be grounds for rejecting a response.

VI. CONTRACTOR'S PROPOSAL SUBMITTAL

The company that is submitting a proposal declares that it has extensive experience providing Task Work Order driven Civil On-Call Construction Services.

The undersigned, as Proposer, hereby declares that the only person or persons interested in the Proposal as principal or principals are named herein, and that no person other than herein mentioned has any interest in the Proposal or in the Agreement to be entered into; that this Proposal or Agreement is made without connection with any other person, company, or parties making a Proposal; and that it is in all respects fair and in good faith without collusion or fraud.

The Proposer further declares that they have examined the site of the work and informed themselves fully in regard to all conditions pertaining to the place where the work is to be done; that they have examined the Plans and Specifications for the work and Contract Documents relative thereto, and have read all special provisions furnished prior to the opening of proposals; and that they have satisfied themselves relative to the materials to be supplied and work to be performed.

The Proposer proposes and agrees, if the Proposal is accepted, to contract with the City of St. Pete Beach, Florida, in the form of an Agreement specified for **"Civil On Call Construction Services"** in St. Pete Beach, Florida, in full and complete accordance with the shown, noted, described, and reasonably intended requirements of the Plans, Specifications, and Contract Documents, to the full and entire satisfaction of the City of St. Pete Beach, Florida.

The successful Proposer shall be required to utilize the template Agreement in this Request for Proposals (RFP) and any questions regarding the Agreement must be addressed during the RFP process before submittal. The City reserves the right to respond or not respond to questions in the form of an addendum.

The Proposer proposes to furnish all materials, equipment, labor, and perform the work submitted in their proposal schedule for the City of St. Pete Beach **"Civil On Call Construction Services."**

COMPANY:_____ DATE: _____

ADDRESS:_____ PHONE:_____

PROPOSER: _____ NAME: _____

(SIGNATURE) (PRINT NAME & TITLE)

STATE OF FLORIDA
COUNTY OF _____

The foregoing instrument was sworn to (or affirmed), subscribed, and acknowledged before me by means of ☐ physical presence or ☐ online notarization, this _____ day of _____, 2026, by_____, who is personally known to me or has produced _____ as identification.

(SEAL)

_____
Notary Public – State of Florida

_____
(Print, Type, Stamp, or Commissioned Name of Notary Public)

SUBMIT PROPOSAL TO: Electronically via Bonfire only

VII. PUBLIC ENTITY CRIMINAL AFFIDAVIT

SWORN STATEMENT – PUBLIC ENTITY CRIMES

PURSUANT TO § 287.133 (3)(a), FLORIDA STATUTES, ON PUBLIC ENTITY CRIMES
THE FORM MUST BE SIGNED AND SWORN TO IN THE PRESENCE OF A NOTARY PUBLIC OR OTHER OFFICIAL AUTHORIZED TO ADMINISTER OATHS.

1. This sworn statement is submitted to: City of St. Pete Beach
by: _____
(Print individual's name and title)

for: _____
(Print name of entity submitting sworn statement)

at: _____
(Business address)

and (if applicable), its Federal Employer Identification Number (FEIN):

_____
(FEIN)
or, if the entity has no FEIN, include the Social Security Number:

_____
(SSN)

by the individual signing this sworn statement:
_____ (Signature)

2. I understand that a "public entity crime" as defined in § 287.133 (1)(g), Fla. Stat., means a violation of any State or Federal law by a person with respect to and directly related to the transaction of business with any public entity or with an agency or political subdivision of any other state or of the United States including, but not limited to, any proposal or contract for goods or services, any lease for real property, or any contract for the construction or repair of a public building or public work, involving antitrust, fraud, theft, bribery, collusion, racketeering, conspiracy, or material misrepresentation.

3. I understand that "convicted" or "conviction" as defined in § 287.133 (1)(b), Fla. Stat., means a finding of guilt or a conviction of public entity crime with or without an adjudication of guilt in any Federal or State trial court of record relating to charges brought by indictment or information after July 1, 1989, as a result of a jury verdict, non-jury trial, or entry of a plea of guilty or nolo contendere.

4. I understand that an "affiliate" as defined in § 287.133 (1)(a), Fla. Stat., means:
   a. A predecessor or successor of a person convicted of a public entity crime or
   b. An entity under the control of any natural person who is active in the management of the entity and who has been convicted of a public entity crime. The term "affiliate" includes those officers, directors, executives, partners, shareholders, employees, members, and agents who are active in the management of an affiliate. The ownership by one (1) person of shares constituting a controlling interest in another person or a pooling of equipment or income among persons when not for fair market value under the arm's length agreement, shall be a prima facie case that one (1) person controls another person. A person who knowingly enters into a joint venture with a person who has been convicted of a public crime in Florida during the preceding thirty-six (36) months shall be considered an affiliate.

5. I understand that a "person" as defined in Section 287.133 (1)(e), Fla. Stat., means any natural person or any entity organized under the laws of any state or of the United States with the legal power to enter into a binding contract and which proposals or applies to proposal on contracts let by a public entity, or which otherwise transacts or applies to transact business with a public entity. The term "person" includes those officers, directors, executives, partners, shareholders, employees, members, and agents who are active in management of an entity.

6. Based on information and belief, the **statement which I have marked below is true** in relation to the entity submitting this sworn statement (indicate which statement applies).

☐ Neither the entity submitting this sworn statement, nor any of its officers, directors, executives, partners, shareholders, employees, members, or agents who are active in the management of the entity nor any affiliate of the entity has been charged with and convicted of a public entity crime subsequent to July 1, 1989.

☐The entity submitting this sworn statement or one (1) or more of its officers, directors, executives, partners, shareholders, employees, members, or agents who are active in the management of the entity or an affiliate of the entity has been charged with and convicted of a public entity crime subsequent to July 1, 1989.

☐The entity submitting this sworn statement or one (1) or more of its officers, directors, executives, partners, shareholders, employees, members, or agents who are active in the management of the entity or an affiliate of the entity has been charged with and convicted of a public entity crime subsequent to July 1, 1989. However, there has been a subsequent proceeding before a Hearing Office of the State of Florida, Division of Administrative Hearings and the Final Order entered by the Hearing Officer determined that it was not in the public interest to place the entity submitting this sworn statement on the convicted vendor list (attach a copy of the final order).

I UNDERSTAND THAT THE SUBMISSION OF THIS FORM TO THE CONTRACTING OFFICE FOR THE PUBLIC ENTITY IDENTIFIED IN PARAGRAPH 1 ABOVE IS FOR THE PUBLIC ENTITY ONLY AND THAT THIS FORM IS VALID THROUGH DECEMBER 31 OF THE CALENDAR YEAR IN WHICH IT IS FILED. I ALSO UNDERSTAND THAT I AM REQUIRED TO INFORM THE PUBLIC ENTITY PRIOR TO ENTERING INTO A CONTRACT IN EXCESS OF THE THRESHOLD AMOUNT PROVIDED IN SECTION 287.017, FLORIDA STATUTES, FOR CATEGORY TWO OF ANY CHANGE IN THE INFORMATION CONTAINED IN THIS FORM.

STATE OF FLORIDA
COUNTY OF _____

The foregoing instrument was sworn to (or affirmed), subscribed, and acknowledged before me by means of ☐ physical presence or ☐ online notarization, this _____ day of _____, 2026, by_____, who is personally known to me or has produced _____ as identification.

(SEAL)

_____
Notary Public – State of Florida

_____
(Print, Type, Stamp, or Commissioned
Name of Notary Public)

VIII. NON-COLLUSION AFFADAVIT

STATE OF _____ COUNTY OF _____

I state that **I**_____ of _____,
(Name and Title) (Name of Firm)

I am authorized to make this affidavit on behalf of my firm and its owner, directors and officers. I am the person responsible in my firm for the price(s) and amount(s) of this Response, and the preparation of the Response. I state that:

1. The price(s) and amount(s) of this Response have been arrived at independently and without consultation, communication or agreement with any other Provider, potential provider, Proposal, or potential Proposal.
2. Neither the price(s) nor the amount(s) of this Response, and neither the approximate price(s) nor approximate amount(s) of this Response, have been disclosed to any other firm or person who is a Provider, potential Provider, Proposal, or potential Proposal, and they will not be disclosed before Proposal opening.
3. No attempt has been made or will be made to induce any firm or persons to refrain from submitting a Response for this contract, or to submit a price(s) higher that the prices in this Response, or to submit any intentionally high or noncompetitive price(s) or other form of complementary Response.
4. The Response of my firm is made in good faith and not pursuant to any agreement or discussion with, or inducement from, any firm or person to submit a complementary or other noncompetitive Response.
5. _____, its affiliates, subsidiaries, officers, director, and employees (Name of Firm) are not currently under investigation, by any governmental agency and have not in the last three years been convicted or found liable for any act prohibited by State or Federal law in any jurisdiction, involving conspiracy or collusion with respect to Proposal, on any public contract, except as follows:

I state that I and the named firm understand and acknowledge that the above representations are material and important, and will be relied on by the State of Florida for which this Response is submitted. I understand and my firm understands that any misstatement in this affidavit is, and shall be treated as, fraudulent concealment from the State of Florida of the true facts relating to the submission of responses for this contract.

Name of Organization:_____ Signed By: _____

Print Name:_____

The foregoing instrument was sworn to (or affirmed), subscribed, and acknowledged before me by means of ☐ physical presence or ☐ online notarization, this _____ day of _____, 2026, by _____, who is personally known to me or has produced _____ as identification.

(SEAL)

_____
Notary Public – State of Florida

_____
(Print, Type, Stamp, or Commissioned
Name of Notary Public)

Bid Form for City of St Pete Beach
On-Call Civil Construction Services
Request for Proposal

Specifications for the numbered pay items can be found in the current FDOT "Standard Specifications for Road and Bridge Construction".
Bid quantities are for comparison purposes only. This contract consists of various projects which are not yet defined and no quantities are guaranteed.

Pay Item No.	Item Description	Units	Est. Quantity	Unit Price	Amount
0101 1 (2501-5000)	MOBILIZATION (PER WORK ASSIGNMENT/LOCATION) - $2,501 TO $5,000	LS	1		$0.00
0101 1 (5501-25000)	MOBILIZATION (PER WORK ASSIGNMENT/LOCATION) - $5,001 TO $25,000	LS	1		$0.00
0101 1 (25001-50000)	MOBILIZATION (PER WORK ASSIGNMENT/LOCATION) - $25,001 TO $50,000	LS	1		$0.00
0101 1 (50001-150000)	MOBILIZATION (PER WORK ASSIGNMENT/LOCATION) - $50,001 TO $150,000	LS	1		$0.00
0101 1 (150001-250000)	MOBILIZATION (PER WORK ASSIGNMENT/LOCATION) - $150,001 TO $250,000	LS	1		$0.00
0101 1 (250001-350000)	MOBILIZATION (PER WORK ASSIGNMENT/LOCATION) - $250,001 TO $350,000	LS	1		$0.00
0101 1 (350001-500000)	MOBILIZATION (PER WORK ASSIGNMENT/LOCATION) - $350,001 to $500,000	LS	1		$0.00
0101 1 (500001+)	MOBILIZATION (PER WORK ASSIGNMENT/LOCATION) - $500,001 or more	LS	1		$0.00
0101 1 (2501-5000)	EMERGENCY MOBILIZATION (PER WORK ASSIGNMENT/LOCATION) - $2,501 TO $5,000	LS	1		$0.00
0101 1 (5501-25000)	EMERGENCY MOBILIZATION (PER WORK ASSIGNMENT/LOCATION) - $5,001 TO $25,000	LS	1		$0.00
0101 1 (25001-50000)	EMERGENCY MOBILIZATION (PER WORK ASSIGNMENT/LOCATION) - $25,001 TO $50,000	LS	1		$0.00
0101 1 (50001-150000)	EMERGENCY MOBILIZATION (PER WORK ASSIGNMENT/LOCATION) - $50,001 TO $150,000	LS	1		$0.00
0101 1 (150001-250000)	EMERGENCY MOBILIZATION (PER WORK ASSIGNMENT/LOCATION) - $150,001 TO $250,000	LS	1		$0.00
0102 1	MAINTENANCE OF TRAFFIC	Lump Sum (LS) cost to be assigned for each Task Order and shall not exceed 10% of the proposed construction cost.			
0102 3	COMMERCIAL MATERIAL FOR TEMPORARY DRIVEWAY MAINTENANCE	CY	50		$0.00
0102 14	TRAFFIC CONTROL OFFICER	HR	500		$0.00
0102 60	WORK ZONE SIGN	ED	6000		$0.00
0102 61	BUSINESS SIGN	EA	5		$0.00
0102 71 11	BARRIER WALL, TEMPORARY, F&I, CONCRETE	LF	200		$0.00
0102 71 13	BARRIER WALL, TEMPORARY, F&I, LOW PROFILE, CONCRETE	LF	200		$0.00
0102 71 14	BARRIER WALL, TEMPORARY, F&I, TYPE K	LF	200		$0.00
0102 71 21	BARRIER WALL, TEMPORARY, RELOCATE, CONCRETE	LF	200		$0.00
0102 71 23	BARRIER WALL, TEMPORARY, RELOCATE, LOW PROFILE, CONCRETE	LF	200		$0.00
0102 71 24	BARRIER WALL, TEMPORARY, RELOCATE, TYPE K	LF	200		$0.00
0102 73	TEMPORARY GUARDRAIL	LF	20		$0.00

0102 74 1	CHANNELIZING DEVICE- TYPES I, II, DI, VP, DRUM, OR LCD	ED	15000		$0.00
0102 74 2	CHANNELIZING DEVICE, TYPE III, 6'	ED	1000		$0.00
0102 74 7	CHANNELIZING DEVICE- PEDESTRIAN LCD (LONGITUDINAL CHANNELIZING DEVICE)	LF	1000		$0.00
0102 75 1	TEMPORARY SEPARATOR, F&I REMOVE	LF	500		$0.00
0102 75 2	TEMPORARY SEPARATOR, F&I REMAIN	LF	500		$0.00
0102 75 3	TEMPORARY SEPARATOR, INSTALL	LF	500		$0.00
0102 75 4	TEMPORARY SEPARATOR, RELOCATE	LF	500		$0.00
0102 75 5	TEMPORARY SEPARATOR, REMOVE	LF	500		$0.00
0102 76	ARROW BOARD / ADVANCE WARNING ARROW PANEL	ED	250		$0.00
0102 78	TEMPORARY RETROREFLECTIVE PAVEMENT MARKER	EA	50		$0.00
0102 89 1	TEMPORARY CRASH CUSHION, REDIRECTIVE OPTION	LO	5		$0.00
0102 99	PORTABLE CHANGEABLE MESSAGE SIGN, TEMPORARY	ED	600		$0.00
0102 104	TEMPORARY SIGNALIZATION AND MAINTENANCE, INTERSECTION	ED	100		$0.00
0102 107 1	TEMPORARY TRAFFIC DETECTION AND MAINTENANCE, INTERSECTION	ED	100		$0.00
0102 150 1	PORTABLE REGULATORY SIGN	ED	50		$0.00
0102 150 2	RADAR SPEED DISPLAY UNIT	ED	50		$0.00
0102 911 1	PAVEMENT MARKING REMOVABLE TAPE, WHITE OR BLACK, SKIP	LF	500		$0.00
0102 911 2	PAVEMENT MARKING REMOVABLE TAPE, WHITE, BLACK, SOLID	LF	500		$0.00
0102 911 3	PAVEMENT MARKING REMOVABLE TAPE, WHITE OR BLACK, OTHER	SF	25		$0.00
0102 912 1	PAVT MARKING REMOVABLE TAPE, YELLOW, SKIP	LF	500		$0.00
0102 912 2	PAVEMENT MARKING REMOVABLE TAPE, YELLOW, SOLID	LF	500		$0.00
0102 912 3	PAVEMENT MARKING REMOVABLE TAPE, YELLOW, OTHER	SF	25		$0.00
0104 1	ARTIFICIAL COVERINGS /ROLLED EROSION CONTROL PRODUCTS	SY	150		$0.00
0104 10 3	SEDIMENT BARRIER	LF	5000		$0.00
0104 11	FLOATING TURBIDITY BARRIER	LF	100		$0.00
0104 12	STAKED TURBIDITY BARRIER- NYLON REINFORCED PVC	LF	100		$0.00
0104 13 1	STAKED SILT FENCE, TYPE III	LF	500		$0.00
0104 13 2	STAKED SILT FENCE, TYPE IV	LF	500		$0.00
0104 18	INLET PROTECTION SYSTEM	EA	100		$0.00

0107 1	LITTER REMOVAL	AC	10		$0.00
0107 2	MOWING	AC	10		$0.00
0110 2 1	CLEARING & GRUBBING	AC	10		$0.00
0110 3	REMOVAL OF EXISTING STRUCTURES/BRIDGES	SF	20		$0.00
0110 4 10	REMOVAL OF EXISTING CONCRETE	SY	2000		$0.00
0110 7 1	MAILBOX, F&I SINGLE	EA	5		$0.00
0120 1	REGULAR EXCAVATION	CY	3000		$0.00
0120 3	LATERAL DITCH EXCAVATION	CY	100		$0.00
0120 4	SUBSOIL EXCAVATION	CY	100		$0.00
0120 5	CHANNEL EXCAVATION	CY	100		$0.00
0120 6	EMBANKMENT	CY	500		$0.00
0121 70	FLOWABLE FILL	CY	50		$0.00
0125 1	EXCAVATION FOR STRUCTURES	CY	25		$0.00
0145 1	GEOSYNTHETIC REINFORCED SOIL SLOPE	SF	25		$0.00
0160 4	TYPE B STABILIZATION	SY	7000		$0.00
0162 1 11	PREPARED SOIL LAYER-6" DEPTH	SY	50		$0.00
0162 1 12	PREPARED SOIL LAYER, FINISH SOIL LAYER, 12"	SY	50		$0.00
0162 1 21	PREPARED SOIL LAYER, ORGANIC SOIL LAYER, 6"	SY	50		$0.00
285701	OPTIONAL BASE, BASE GROUP 01	SY	100		$0.00
285702	OPTIONAL BASE, BASE GROUP 02	SY	100		$0.00
285703	OPTIONAL BASE, BASE GROUP 03	SY	100		$0.00
285704	OPTIONAL BASE, BASE GROUP 04	SY	1000		$0.00
285705	OPTIONAL BASE, BASE GROUP 05	SY	100		$0.00
285706	OPTIONAL BASE, BASE GROUP 06	SY	1000		$0.00
285707	OPTIONAL BASE, BASE GROUP 07	SY	100		$0.00
285708	OPTIONAL BASE, BASE GROUP 08	SY	1000		$0.00
285709	OPTIONAL BASE, BASE GROUP 09	SY	100		$0.00
285710	OPTIONAL BASE GROUP 10	SY	100		$0.00
285711	OPTIONAL BASE, BASE GROUP 11	SY	100		$0.00

285712	OPTIONAL BASE, BASE GROUP 12	SY	100		$0.00
285713	OPTIONAL BASE, BASE GROUP 13	SY	100		$0.00
285714	OPTIONAL BASE, BASE GROUP 14	SY	100		$0.00
285715	OPTIONAL BASE, BASE GROUP 15	SY	100		$0.00
0327 70 1	MILLING EXIST ASPH PAVT, 1" AVG DEPTH	SY	1000		$0.00
0327 70 2	MILLING EXIST ASPH PAVT, 3 1/2" AVG DEPTH	SY	200		$0.00
0327 70 3	MILLING EXIST ASPH PAVT, 4 1/2" AVG DEPTH	SY	200		$0.00
0327 70 4	MILLING EXIST ASPH PAVT, 3" AVG DEPTH	SY	200		$0.00
0327 70 5	MILLING EXIST ASPH PAVT, 2" AVG DEPTH	SY	200		$0.00
0327 70 6	MILLING EXIST ASPH PAVT, 1 1/2" AVG DEPTH	SY	5000		$0.00
0327 70 7	MILLING EXIST ASPH PAVT, 4" AVG DEPTH	SY	200		$0.00
0327 70 8	MILLING EXIST ASPH PAVT, 2 1/2" AVG DEPTH	SY	200		$0.00
0327 70 11	MILLING EXIST ASPH PAVT, 2 1/4" AVG DEPTH	SY	200		$0.00
0327 70 12	MILLING EXIST ASPH PAVT, 1 1/4" AVG DEPTH	SY	200		$0.00
0327 70 13	MILLING EXIST ASPH PAVT, 1 3/4" AVG DEPTH	SY	200		$0.00
0327 70 15	MILLING EXIST ASPH PAVT, 2 3/4" AVG DEPTH	SY	200		$0.00
0327 70 16	MILLING EXIST ASPH PAVT, 1/2" AVG DEPTH	SY	200		$0.00
0327 70 17	MILLING EXIST ASPH PAVT, 3 1/4" AVG DEPTH	SY	200		$0.00
0327 70 19	MILLING EXIST ASPH PAVT, 3/4" AVG DEPTH	SY	200		$0.00
0327 70 20	MILLING EXIST ASPH PAVT, 3 3/4" AVG DEPTH	SY	200		$0.00
0334 1 12 (1-99)	SUPERPAVE ASPHALTIC CONC, TRAFFIC B, 1-99 TONS	TN	50		$0.00
0334 1 12 (100-199)	SUPERPAVE ASPHALTIC CONC, TRAFFIC B, 100 - 199 TONS	TN	150		$0.00
0334 1 12 (200-300)	SUPERPAVE ASPHALTIC CONC, TRAFFIC B, 200 - 300 TONS	TN	250		$0.00
0334 1 12 (300+)	SUPERPAVE ASPHALTIC CONC, TRAFFIC B, 300 TONS OR MORE	TN	350		$0.00
0334 1 13 (1-99)	SUPERPAVE ASPHALTIC CONC, TRAFFIC C 1 - 99 TONS	TN	50		$0.00
0334 1 13 (100-199)	SUPERPAVE ASPHALTIC CONC, TRAFFIC C 100 - 199 TONS	TN	150		$0.00
0334 1 13 (200-300)	SUPERPAVE ASPHALTIC CONC, TRAFFIC C 200 -300 TONS	TN	250		$0.00
0334 1 13 (300+)	SUPERPAVE ASPHALTIC CONC, TRAFFIC C 300 TONS OR MORE	TN	350		$0.00
0334 1 52 (0-99)	SUPERPAVE ASPHALTIC CONCRETE, TRAFFIC B, PG76-22 0-99 TONS	TN	50		$0.00

0334 1 52 (100-199)	SUPERPAVE ASPHALTIC CONCRETE, TRAFFIC B, PG76-22 100-199 TONS	TN	150		$0.00
0334 1 52 (200-300)	SUPERPAVE ASPHALTIC CONCRETE, TRAFFIC B, PG76-22 200-300 TONS	TN	250		$0.00
0334 1 52 (300+)	SUPERPAVE ASPHALTIC CONCRETE, TRAFFIC B, PG76-22 300 TONS OR MORE	TN	350		$0.00
0334 1 53 (0-99)	SUPERPAVE ASPHALTIC CONCRETE, TRAFFIC C, PG76-22 0-99 TONS	TN	50		$0.00
0334 1 53 (100-199)	SUPERPAVE ASPHALTIC CONCRETE, TRAFFIC C, PG76-22 100-199 TONS	TN	150		$0.00
0334 1 53 (200-300)	SUPERPAVE ASPHALTIC CONCRETE, TRAFFIC C, PG76-22 200-300 TONS	TN	250		$0.00
0334 1 53 (300+)	SUPERPAVE ASPHALTIC CONCRETE, TRAFFIC C, PG76-22 300 TONS OR MORE	TN	350		$0.00
0334 1 54 (0-99)	SUPERPAVE ASPHALTIC CONCRETE, TRAFFIC D, PG76-22 0-99 TONS	TN	50		$0.00
0334 1 54 (100-199)	SUPERPAVE ASPHALTIC CONCRETE, TRAFFIC D, PG76-22 100-199 TONS	TN	150		$0.00
0334 1 54 (200-300)	SUPERPAVE ASPHALTIC CONCRETE, TRAFFIC D, PG76-22 200-300 TONS	TN	250		$0.00
0334 1 54 (300+)	SUPERPAVE ASPHALTIC CONCRETE, TRAFFIC D, PG76-22 300 TONS OR MORE	TN	350		$0.00
0334 1 56 (1-99)	SUPERPAVE ASPHALTIC CONCRETE, TRAFFIC B, HIGH POLYMER 0-99 TONS	TN	50		$0.00
0334 1 56 (100-199)	SUPERPAVE ASPHALTIC CONCRETE, TRAFFIC B, HIGH POLYMER 100-199 TONS	TN	150		$0.00
0334 1 56 (200-300)	SUPERPAVE ASPHALTIC CONCRETE, TRAFFIC B, HIGH POLYMER 200-300 TONS	TN	250		$0.00
0334 1 56 (300+)	SUPERPAVE ASPHALTIC CONCRETE, TRAFFIC B, HIGH POLYMER 300 TONS OR MORE	TN	350		$0.00
0334 1 57 (0-99)	SUPERPAVE ASPHALTIC CONCRETE, TRAFFIC C, HIGH POLYMER 0-99 TONS	TN	50		$0.00
0334 1 57 (100-199)	SUPERPAVE ASPHALTIC CONCRETE, TRAFFIC C, HIGH POLYMER 100-199 TONS	TN	150		$0.00
0334 1 57 (200-300)	SUPERPAVE ASPHALTIC CONCRETE, TRAFFIC C, HIGH POLYMER 200-300 TONS	TN	250		$0.00
0334 1 57 (300+)	SUPERPAVE ASPHALTIC CONCRETE, TRAFFIC C, HIGH POLYMER 300 TONS OR MORE	TN	350		$0.00
0334 1 58 (0-99)	SUPERPAVE ASPHALTIC CONCRETE, TRAFFIC D, HIGH POLYMER 0-99 TONS	TN	50		$0.00
0334 1 58 (100-199)	SUPERPAVE ASPHALTIC CONCRETE, TRAFFIC D, HIGH POLYMER 100-199 TONS	TN	150		$0.00
0334 1 58 (200-300)	SUPERPAVE ASPHALTIC CONCRETE, TRAFFIC D, HIGH POLYMER 200-300 TONS	TN	250		$0.00
0334 1 58 (300+)	SUPERPAVE ASPHALTIC CONCRETE, TRAFFIC D, HIGH POLYMER 300 TONS OR MORE	TN	350		$0.00
0337 7 80 (0-99)	ASPHALT CONCRETE FRICTION COURSE,TRAFFIC B, FC-9.5, PG 76-22 0-99 TONS	TN	50		$0.00
0337 7 80 (100-199)	ASPHALT CONCRETE FRICTION COURSE,TRAFFIC B, FC-9.5, PG 76-22 100-199 TONS	TN	150		$0.00
0337 7 80 (200-300)	ASPHALT CONCRETE FRICTION COURSE,TRAFFIC B, FC-9.5, PG 76-22 200-300 TONS	TN	250		$0.00
0337 7 80 (300+)	ASPHALT CONCRETE FRICTION COURSE,TRAFFIC B, FC-9.5, PG 76-22 300 TONS OR MORE	TN	350		$0.00
0337 7 81 (0-99)	ASPHALT CONCRETE FRICTION COURSE,TRAFFIC B, FC-12.5, PG 76-22 0-99 TONS	TN	50		$0.00
0337 7 81 (100-199)	ASPHALT CONCRETE FRICTION COURSE,TRAFFIC B, FC-12.5, PG 76-22 100-199 TONS	TN	150		$0.00

0337 7 81 (200-300)	ASPHALT CONCRETE FRICTION COURSE,TRAFFIC B, FC-12.5, PG 76-22 200-300 TONS	TN	250		$0.00
0337 7 81 (300+)	ASPHALT CONCRETE FRICTION COURSE,TRAFFIC B, FC-12.5, PG 76-22 300 TONS OR MORE	TN	350		$0.00
0337 7 82 (0-99)	ASPHALT CONCRETE FRICTION COURSE,TRAFFIC C, FC-9.5, PG 76-22 0-99 TONS	TN	50		$0.00
0337 7 82 (100-199)	ASPHALT CONCRETE FRICTION COURSE,TRAFFIC C, FC-9.5, PG 76-22 100-199 TONS	TN	150		$0.00
0337 7 82 (200-300)	ASPHALT CONCRETE FRICTION COURSE,TRAFFIC C, FC-9.5, PG 76-22 200-300 TONS	TN	250		$0.00
0337 7 82 (300+)	ASPHALT CONCRETE FRICTION COURSE,TRAFFIC C, FC-9.5, PG 76-22 300 TONS OR MORE	TN	350		$0.00
0337 7 83 (0-99)	ASPHALT CONCRETE FRICTION COURSE,TRAFFIC C, FC-12.5, PG 76-22 0-99 TONS	TN	50		$0.00
0337 7 83 (100-199)	ASPHALT CONCRETE FRICTION COURSE,TRAFFIC C, FC-12.5, PG 76-22 100-199 TONS	TN	150		$0.00
0337 7 83 (200-300)	ASPHALT CONCRETE FRICTION COURSE,TRAFFIC C, FC-12.5, PG 76-22 200-300 TONS	TN	250		$0.00
0337 7 83 (300+)	ASPHALT CONCRETE FRICTION COURSE,TRAFFIC C, FC-12.5, PG 76-22 300 TONS OR MORE	TN	350		$0.00
0337 7 85 (0-99)	ASPHALT CONCRETE FRICTION COURSE,TRAFFIC D, FC-12.5, PG 76-22 0-99 TONS	TN	50		$0.00
0337 7 85 (100-199)	ASPHALT CONCRETE FRICTION COURSE,TRAFFIC D, FC-12.5, PG 76-22 100-199 TONS	TN	150		$0.00
0337 7 85 (200-300)	ASPHALT CONCRETE FRICTION COURSE,TRAFFIC D, FC-12.5, PG 76-22 200-300 TONS	TN	250		$0.00
0337 7 85 (300+)	ASPHALT CONCRETE FRICTION COURSE,TRAFFIC D, FC-12.5, PG 76-22 300 TONS OR MORE	TN	350		$0.00
0337 7 90 (0-99)	ASPHALT CONCRETE FRICTION COURSE,TRAFFIC B, FC-9.5, HIGH POLYMER 0-99 TONS	TN	50		$0.00
0337 7 90 (100-199)	ASPHALT CONCRETE FRICTION COURSE,TRAFFIC B, FC-9.5, HIGH POLYMER 100-199 TONS	TN	150		$0.00
0337 7 90 (200-300)	ASPHALT CONCRETE FRICTION COURSE,TRAFFIC B, FC-9.5, HIGH POLYMER 200-300 TONS	TN	250		$0.00
0337 7 90 (300+)	ASPHALT CONCRETE FRICTION COURSE,TRAFFIC B, FC-9.5, HIGH POLYMER 300 TONS OR MORE	TN	350		$0.00
0337 7 93 (0-99)	ASPHALT CONCRETE FRICTION COURSE,TRAFFIC C, FC-12.5, HIGH POLYMER 0-99 TONS	TN	50		$0.00
0337 7 93 (100-199)	ASPHALT CONCRETE FRICTION COURSE,TRAFFIC C, FC-12.5, HIGH POLYMER 100-199 TONS	TN	150		$0.00
0337 7 93 (200-300)	ASPHALT CONCRETE FRICTION COURSE,TRAFFIC C, FC-12.5, HIGH POLYMER 200-300 TONS	TN	250		$0.00
0337 7 93 (300+)	ASPHALT CONCRETE FRICTION COURSE,TRAFFIC C, FC-12.5, HIGH POLYMER 300 TONS OR MORE	TN	350		$0.00
0337 7 94 (0-99)	ASPHALT CONCRETE FRICTION COURSE,TRAFFIC D, FC-12.5, HIGH POLYMER 0-99 TONS	TN	50		$0.00
0337 7 94 (100-199)	ASPHALT CONCRETE FRICTION COURSE,TRAFFIC D, FC-12.5, HIGH POLYMER 100-199 TONS	TN	150		$0.00
0337 7 94 (200-300)	ASPHALT CONCRETE FRICTION COURSE,TRAFFIC D, FC-12.5, HIGH POLYMER 200-300 TONS	TN	250		$0.00
0337 7 94 (300+)	ASPHALT CONCRETE FRICTION COURSE,TRAFFIC D, FC-12.5, HIGH POLYMER 300 TONS OR MORE	TN	350		$0.00
0339 1	MISCELLANEOUS ASPHALT PAVEMENT	TN	25		$0.00
0350 3 5	PLAIN CEMENT CONCRETE PAVEMENT, 8"	SY	100		$0.00
0350 3 9	PLAIN CEMENT CONCRETE PAVEMENT, 10"	SY	100		$0.00

0350 3 13	PLAIN CEMENT CONCRETE PAVEMENT, 12"	SY	100		$0.00
0350 5	CLEANING & SEALING JOINTS- CONCRETE PAVEMENT:	LF	100		$0.00
0350 30 13	CONCRETE PAVEMENT FOR ROUNDABOUT APRON, 12" DEPTH	SY	100		$0.00
0352 70	GRINDING CONCRETE PAVEMENT	SY	100		$0.00
0400 0 11	CONCRETE CLASS NS, GRAVITY WALL	CY	10		$0.00
0400 1 2	CONCRETE CLASS I, ENDWALLS	CY	10		$0.00
0400 1 11	CONCRETE CLASS I, RETAINING WALLS	CY	10		$0.00
0400 2 1	CONCRETE CLASS II, CULVERTS	CY	10		$0.00
0400 2 2	CONCRETE CLASS II, ENDWALLS	CY	10		$0.00
0400 2 5	CONCRETE CLASS II, BRIDGE SUBSTRUCTURE	CY	10		$0.00
0400 2 11	CONCRETE CLASS II, RETAINING WALLS	CY	10		$0.00
0400 3 1	CONCRETE CLASS III, CULVERTS	CY	10		$0.00
0400 3 8	CONCRETE CLASS III, BULKHEAD	CY	10		$0.00
0400 4 1	CONCRETE CLASS IV, CULVERTS	CY	10		$0.00
0400 4 2	CONCRETE CLASS IV, ENDWALLS	CY	10		$0.00
0400 4 5	CONCRETE CLASS IV, BRIDGE SUBSTRUCTURE	CY	10		$0.00
0400 4 11	CONC CLASS IV, RETAINING WALLS	CY	10		$0.00
0400 145	CLEANING CONCRETE SURFACE	SF	20		$0.00
0401 70 1	RESTORE SPALLED AREAS, EPOXY	CF	10		$0.00
0401 70 4	RESTORE SPALLED AREAS, PORTLAND CEMENT GROUT	CF	10		$0.00
0401 70 5	RESTORE SPALLED AREAS, CONTRACTORS OPTION	CF	10		$0.00
0411 1	EPOXY MATERIAL FOR CRACK INJECTION- STRUCTURES REHAB	GA	10		$0.00
0411 2	CRACKS INJECT & SEAL- STRUCTURES REHAB	LF	25		$0.00
413-149	PENETRANT SEALER	GA	10		$0.00
413-154	CLEANING & SEALING CONCRETE SURFACES- PENETRANT SEALER OR METHACRYLATES	SF	25		$0.00
0415 1 1	REINFORCING STEEL- ROADWAY	LB	100		$0.00
0415 1 3	REINFORCING STEEL- RETAINING WALL	LB	100		$0.00
0415 1 5	REINFORCING STEEL- BRIDGE SUBSTRUCTURE	LB	100		$0.00
0415 1 6	REINFORCING STEEL- MISCELLANEOUS	LB	100		$0.00

0415 1 8	REINFORCING STEEL- BULKHEAD	LB	100		$0.00
0425 1201	INLETS, CURB, TYPE 9, <10'	EA	3		$0.00
0425 1202	INLETS, CURB, TYPE 9, >10'	EA	3		$0.00
0425 1203	INLETS, CURB, TYPE 9, J BOT, <10'	EA	3		$0.00
0425 1204	INLETS, CURB, TYPE 9, J BOT, >10'	EA	3		$0.00
0425 1205	INLETS, CURB, TYPE 9, PARTIAL	EA	3		$0.00
0425 1209	INLETS, CURB, TYPE 9, MODIFY	EA	3		$0.00
0425 1211	INLETS, CURB, TYPE 10, <10'	EA	3		$0.00
0425 1212	INLETS, CURB, TYPE 10, >10'	EA	3		$0.00
0425 1213	INLETS, CURB, TYPE 10, J BOT <10'	EA	3		$0.00
0425 1214	INLETS, CURB, TYPE 10, J BOT >10'	EA	3		$0.00
0425 1215	INLETS, CURB, TYPE 10, PARTIAL	EA	3		$0.00
0425 1311	INLETS, CURB, TYPE P-1, <10'	EA	3		$0.00
0425 1312	INLETS, CURB TYPE P-1, >10'	EA	3		$0.00
0425 1315	INLETS, CURB TYPE P-1, PARTIAL	EA	3		$0.00
0425 1319	INLETS, CURB TYPE P-1, MODIFY	EA	3		$0.00
0425 1321	INLETS, CURB, TYPE P-2, <10'	EA	3		$0.00
0425 1322	INLETS, CURB, TYPE P-2, >10'	EA	3		$0.00
0425 1325	INLETS, CURB, TYPE P-2, PARTIAL	EA	3		$0.00
0425 1329	INLETS, CURB TYPE P-2, MODIFY	EA	3		$0.00
0425 1331	INLETS, CURB, TYPE P-3, <10'	EA	3		$0.00
0425 1332	INLETS, CURB. TYPE P-3, >10'	EA	3		$0.00
0425 1335	INLETS, CURB, TYPE P-3, PARTIAL	EA	3		$0.00
0425 1341	INLETS, CURB, TYPE P-4, <10'	EA	3		$0.00
0425 1342	INLETS, CURB, TYPE P-4, >10'	EA	3		$0.00
0425 1345	INLETS, CURB, TYPE P-4, PARTIAL	EA	3		$0.00
0425 1349	INLETS, CURB, TYPE P-4, MODIFY	EA	3		$0.00
0425 1351	INLETS, CURB, TYPE P-5, <10'	EA	3		$0.00
0425 1352	INLETS, CURB, TYPE P-5, >10'	EA	3		$0.00

0425 1355	INLETS, CURB, TYPE P-5, PARTIAL	EA	3		$0.00
0425 1359	INLETS, CURB, TYPE P-5, MODIFY	EA	3		$0.00
0425 1361	INLETS, CURB, TYPE P-6, <10'	EA	3		$0.00
0425 1362	INLETS, CURB, TYPE P-6, >10'	EA	3		$0.00
0425 1365	INLETS, CURB, TYPE P-6, PARTIAL	EA	3		$0.00
0425 1369	INLETS, CURB, TYPE P-6, MODIFY	EA	3		$0.00
0425 1411	INLETS, CURB TYPE J-1, <10'	EA	3		$0.00
0425 1412	INLETS, CURB, TYPE J-1, >10'	EA	3		$0.00
0425 1415	INLETS, CURB, TYPE J-1, PARTIAL	EA	3		$0.00
0425 1419	INLETS, CURB, TYPE J-1, MODIFY	EA	3		$0.00
0425 1421	INLETS, CURB, TYPE J-2, <10'	EA	3		$0.00
0425 1422	INLETS, CURB, TYPE J-2, >10'	EA	3		$0.00
0425 1425	INLETS, CURB, TYPE J-2, PARTIAL	EA	3		$0.00
0425 1429	INLETS, CURB, TYPE J-2, MODIFY	EA	3		$0.00
0425 1431	INLETS, CURB, TYPE J-3, <10'	EA	3		$0.00
0425 1432	INLETS, CURB, TYPE J-3, >10'	EA	3		$0.00
0425 1435	INLETS, CURB, TYPE J-3, PARTIAL	EA	3		$0.00
0425 1441	INLETS, CURB, TYPE J-4, <10'	EA	3		$0.00
0425 1442	INLETS, CURB, TYPE J-4, >10'	EA	3		$0.00
0425 1445	INLETS, CURB, TYPE J-4, PARTIAL	EA	3		$0.00
0425 1451	INLETS, CURB, TYPE J-5, <10'	EA	3		$0.00
0425 1452	INLETS, CURB, TYPE J-5, >10'	EA	3		$0.00
0425 1455	INLETS, CURB, TYPE J-5, PARTIAL	EA	3		$0.00
0425 1459	INLETS, CURB, TYPE J-5, MODIFY	EA	3		$0.00
0425 1461	INLETS, CURB, TYPE J-6, <10'	EA	3		$0.00
0425 1462	INLETS, CURB, TYPE J-6, >10'	EA	3		$0.00
0425 1465	INLETS, CURB, TYPE J-6, PARTIAL	EA	3		$0.00
0425 1469	INLETS, CURB, TYPE J-6, MODIFY	EA	3		$0.00
0425 1471	INLETS, CURB, TYPE 7, <10'	EA	3		$0.00

0425 1472	INLETS, CURB, TYPE 7, >10'	EA	3		$0.00
0425 1473	INLETS, CURB, TYPE 7, J BOT , <10'	EA	3		$0.00
0425 1474	INLETS, CURB, TYPE 7, J BOT ,>10'	EA	3		$0.00
0425 1475	INLETS, CURB, TYPE 7, PARTIAL	EA	3		$0.00
0425 1479	INLETS, CURB, TYPE 7, MODIFY	EA	3		$0.00
0425 1481	INLETS, CURB, TYPE 8, <10'	EA	3		$0.00
0425 1483	INLETS, CURB, TYPE 8, J BOT , <10'	EA	3		$0.00
0425 1484	INLETS, CURB, TYPE 8, J BOT ,>10'	EA	3		$0.00
0425 1485	INLETS, CURB, TYPE 8, PARTIAL	EA	3		$0.00
0425 1489	INLETS, CURB, TYPE 8, MODIFY	EA	3		$0.00
0425 1501	INLETS, DT BOT, TYPE A, <10'	EA	3		$0.00
0425 1502	INLETS, DT BOT, TYPE A, >10'	EA	3		$0.00
0425 1503	INLETS, DT BOT, TYPE A, J BOT, <10'	EA	3		$0.00
0425 1504	INLETS, DT BOT, TYPE A, J BOT, >10'	EA	3		$0.00
0425 1505	INLETS, DT BOT, TYPE A, PARTIAL	EA	3		$0.00
0425 1511	INLETS, DT BOT, TYPE B, <10'	EA	3		$0.00
0425 1512	INLETS, DT BOT, TYPE B, >10'	EA	3		$0.00
0425 1513	INLETS, DT BOT, TYPE B, J BOT, <10'	EA	3		$0.00
0425 1514	INLETS, DT BOT, TYPE B, J BOT, >10'	EA	3		$0.00
0425 1515	INLETS, DT BOT, TYPE B, PARTIAL	EA	3		$0.00
0425 1519	INLETS, DT BOT, TYPE B, MODIFY	EA	3		$0.00
0425 1521	INLETS, DT BOT, TYPE C,<10'	EA	3		$0.00
0425 1522	INLETS, DT BOT, TYPE C,>10'	EA	3		$0.00
0425 1523	INLETS, DT BOT, TYPE C,JBOT, <10'	EA	3		$0.00
0425 1524	INLETS, DT BOT, TYPE C, JBOT, >10'	EA	3		$0.00
0425 1525	INLETS, DITCH BOTTOM, TYPE C, PARTIAL	EA	3		$0.00
0425 1529	INLETS, DT BOT, TYPE C, MODIFY	EA	3		$0.00
0425 1531	INLETS, DITCH BOTTOM, TYPE C MODIFIED- BACK OF SIDEWALK, <10'	EA	3		$0.00
0425 1532	INLETS, DITCH BOTTOM, TYPE C MODIFIED- BACK OF SIDEWALK, >10'	EA	3		$0.00

0425 1533	INLETS, DITCH BOTTOM TYPE C MODIFIED- BACK OF SIDEWALK, J BOT, <10'	EA	3		$0.00
0425 1534	INLETS, DITCH BOTTOM, TYPE C MODIFIED- BACK OF SIDEWALK, J BOT, >10'	EA	3		$0.00
0425 1535	INLETS, DITCH BOTTOM TYPE C MODIFIED- BACK OF SIDEWALK, PARTIAL	EA	3		$0.00
0425 1541	INLETS, DT BOT, TYPE D, <10'	EA	3		$0.00
0425 1542	INLETS, DT BOT, TYPE D, >10'	EA	3		$0.00
0425 1543	INLETS, DITCH BOTTOM, TYPE D, J BOT, <10'	EA	3		$0.00
0425 1544	INLETS, DITCH BOTTOM, TYPE D, J BOT, >10'	EA	3		$0.00
0425 1545	INLETS, DITCH BOTTOM, TYPE D, PARTIAL	EA	3		$0.00
0425 1549	INLETS, DT BOT, TYPE D, MODIFY	EA	3		$0.00
0425 1551	INLETS, DT BOT, TYPE E, <10'	EA	3		$0.00
0425 1552	INLETS, DT BOT, TYPE E, >10'	EA	3		$0.00
0425 1553	INLETS, DT BOT, TYPE E, J BOT, <10'	EA	3		$0.00
0425 1554	INLETS, DT BOT, TYPE E, J BOT, >10'	EA	3		$0.00
0425 1555	INLETS, DT BOT, TYPE E, PARTIAL	EA	3		$0.00
0425 1559	INLETS, DT BOT, TYPE E, MODIFY	EA	3		$0.00
0425 1561	INLETS, DT BOT, TYPE F, <10'	EA	3		$0.00
0425 1562	INLETS, DT BOT, TYPE F, >10'	EA	3		$0.00
0425 1563	INLETS, DITCH BOTTOM, TYPE F, J BOT, <10'	EA	3		$0.00
0425 1564	INLETS, DITCH BOTTOM, TYPE F, J BOT, >10'	EA	3		$0.00
0425 1565	INLETS, DITCH BOTTOM, TYPE F, PARTIAL	EA	3		$0.00
0425 1569	INLETS, DITCH BOTTOM, TYPE F, MODIFY	EA	3		$0.00
0425 1571	INLETS, DITCH BOTTOM, TYPE G, <10'	EA	3		$0.00
0425 1572	INLETS, DITCH BOTTOM, TYPE G, >10'	EA	3		$0.00
0425 1573	INLETS, DITCH BOTTOM, TYPE G, J BOT, <10'	EA	3		$0.00
0425 1574	INLETS, DITCH BOTTOM, TYPE G, J BOT, >10'	EA	3		$0.00
0425 1575	INLETS, DITCH BOTTOM, TYPE G, PARTIAL	EA	3		$0.00
0425 1579	INLETS, DITCH BOTTOM, TYPE G, MODIFY	EA	3		$0.00
0425 1581	INLETS, DT BOT, TYPE H, <10'	EA	3		$0.00
0425 1582	INLETS, DT BOT, TYPE H, >10'	EA	3		$0.00

0425 1583	INLETS, DT BOT, TYPE H, J BOTTOM <10'	EA	3		$0.00
0425 1584	INLETS, DT BOT, TYPE H, J BOTTOM >10'	EA	3		$0.00
0425 1585	INLETS, DT BOT, TYPE H, PARTIAL	EA	3		$0.00
0425 1589	INLETS, DT BOT, TYPE H, MODIFY	EA	3		$0.00
0425 1601	INLETS, DT BOT, TYPE J, <10'	EA	3		$0.00
0425 1602	INLETS, DT BOT, TYPE J, >10'	EA	3		$0.00
0425 1603	INLETS, DT BOT, TYPE J, J BOT, <10'	EA	3		$0.00
0425 1604	INLETS, DT BOT, TYPE J, JBOT,>10'	EA	3		$0.00
0425 1605	INLETS, DT BOT, TYPE J, PARTIAL	EA	3		$0.00
0425 1609	INLETS, DT BOT, TYPE J, MODIFY	EA	3		$0.00
0425 1611	INLETS, DITCH BOTTOM, TYPE K, <10'	EA	3		$0.00
0425 1619	INLETS, DITCH BOTTOM, TYPE K, J BOTTOM, MODIFY	EA	3		$0.00
0425 1701	INLETS, GUTTER, TYPE S, <10'	EA	3		$0.00
0425 1702	INLETS, GUTTER, TYPE S, >10'	EA	3		$0.00
0425 1703	INLETS, GUTTER, TYPE S, J BOTTOM <10'	EA	3		$0.00
0425 1704	INLETS, GUTTER, TYPE S, J BOTTOM, >10'	EA	3		$0.00
0425 1705	INLETS, GUTTER, TYPE S, PARTIAL	EA	3		$0.00
0425 1711	INLETS, GUTTER, TYPE V, <10'	EA	3		$0.00
0425 1712	INLETS, GUTTER, TYPE V, >10'	EA	3		$0.00
0425 1713	INLETS, GUTTER, TYPE V, J BOT, <10'	EA	3		$0.00
0425 1714	INLETS, GUTTER, TYPE V, J BOTTOM, >10'	EA	3		$0.00
0425 1715	INLETS, GUTTER, TYPE V, PARTIAL	EA	3		$0.00
0425 1719	INLETS, GUTTER, TYPE V, MODIFY	EA	3		$0.00
0425 1910	INLETS, CLOSED FLUME	EA	3		$0.00
0425 2 41	MANHOLES, P-7, <10'	EA	3		$0.00
0425 2 42	MANHOLES, P-7, >10'	EA	3		$0.00
0425 2 43	MANHOLES, P-7, PARTIAL	EA	3		$0.00
0425 2 61	MANHOLES, P-8, <10'	EA	3		$0.00
0425 2 62	MANHOLES, P-8, >10'	EA	3		$0.00

0425 2 63	MANHOLES, P-8, PARTIAL	EA	3		$0.00
0425 2 71	MANHOLES, J-7, <10'	EA	3		$0.00
0425 2 72	MANHOLES, J-7, >10'	EA	3		$0.00
0425 2 73	MANHOLES, J-7, PARTIAL	EA	3		$0.00
0425 2 91	MANHOLES, J-8, <10'	EA	3		$0.00
0425 2 92	MANHOLES, J-8, >10'	EA	3		$0.00
0425 2 93	MANHOLES, J-8, PARTIAL	EA	3		$0.00
0425 2110	MANHOLES, REPAIR	EA	3		$0.00
0425 3 41	JUNCTION BOX, DRAINAGE, P-7, <10'	EA	3		$0.00
0425 3 42	JUNCTION BOXES, P-7, >10'	EA	3		$0.00
0425 3 43	JUNCTION BOX, DRAINAGE, P-7, PARTIAL	EA	3		$0.00
0425 3 50	JUNCTION BOX, DRAINAGE, REPAIR	EA	3		$0.00
0425 3 61	JUNCTION BOXES, J-7, <10'	EA	3		$0.00
0425 3 62	JUNCTION BOXES, J-7, >10'	EA	3		$0.00
0425 3 63	JUNCTION BOXES, DRAINAGE, J-7, PARTIAL	EA	3		$0.00
0425 4	INLETS, ADJUST	EA	3		$0.00
0425 5	MANHOLE, ADJUST	EA	3		$0.00
0425 6	VALVE BOXES, ADJUST	EA	3		$0.00
0425 7	MANHOLE COVER- REPLACE	EA	3		$0.00
0425 8	DRAINAGE STRUCTURES, MISCELLANEOUS, ADJUST	EA	3		$0.00
0425 11	MODIFY EXISTING DRAINAGE STRUCTURE	EA	3		$0.00
0425 14 1	GRATE FOR EXISTING DRAINAGE STRUCTURE, FURNISH AND INSTALL	SF	3		$0.00
0425 15 41	INLET TOP, REPAIR, CURB INLET	EA	3		$0.00
0425 15 42	INLET TOP, REPAIR, DITCH BOTTOM INLET	EA	3		$0.00
0425 15 51	INLET TOP, REPLACE, CURB INLET	EA	3		$0.00
0425 15 52	INLET TOP, REPLACE, DITCH BOTTOM INLET	EA	3		$0.00
0425 16 11	DRAINAGE MANHOLE- REPLACE TOP AND RIM	EA	3		$0.00
0425 82	REPLACE GRATE	EA	3		$0.00
0430 94 1	DESILTING PIPE, 0 - 24"	LF	50		$0.00

0430 94 2	DESILTING PIPE, 25 - 36"	LF	50		$0.00
430173112	PIPE CULVERT OPTIONAL MATERIAL, ROUND, 12", GUTTER DRAIN	LF	50		$0.00
430173115	PIPE CULVERT OPTIONAL MATERIAL, ROUND, 15", GUTTER DRAIN	LF	50		$0.00
430173118	PIPE CULVERT OPTIONAL MATERIAL, ROUND, 18", GUTTER DRAIN	LF	50		$0.00
430173124	PIPE CULVERT OPTIONAL MATERIAL, ROUND, 24", GUTTER DRAIN	LF	50		$0.00
430173130	PIPE CULVERT OPTIONAL MATERIAL, ROUND, 30", GUTTER DRAIN	LF	50		$0.00
430173136	PIPE CULVERT OPTIONAL MATERIAL, ROUND, 36", GUTTER DRAIN	LF	50		$0.00
430173142	PIPE CULVERT, OPTIONAL MATERIAL, ROUND, 42", GUTTER DRAIN	LF	50		$0.00
430173148	PIPE CULVERT, OPTIONAL MATERIAL, ROUND, 48" GUTTER DRAIN	LF	50		$0.00
430173218	PIPE CULVERT OPTIONAL MATERIAL, OTHER/ELLIPTICAL, 18", GUTTER DRAIN	LF	50		$0.00
430174112	PIPE CULVERT, OPTIONAL MATERIAL, ROUND, 12"SD	LF	50		$0.00
430174115	PIPE CULVERT, OPTIONAL MATERIAL, ROUND, 15"SD	LF	50		$0.00
430174118	PIPE CULVERT, OPTIONAL MATERIAL, ROUND, 18"SD	LF	50		$0.00
430174124	PIPE CULVERT, OPTIONAL MATERIAL, ROUND, 24"SD	LF	50		$0.00
430174130	PIPE CULVERT, OPTIONAL MATERIAL, ROUND, 30"SD	LF	50		$0.00
430174142	PIPE CULVERT, OPTIONAL MATERIAL, ROUND, 42"SD	LF	50		$0.00
430174148	PIPE CULVERT, OPTIONAL MATERIAL, ROUND, 48"SD	LF	50		$0.00
430174154	PIPE CULVERT, OPTIONAL MATERIAL, ROUND, 54"SD	LF	50		$0.00
430174160	PIPE CULVERT, OPTIONAL MATERIAL, ROUND, 60"SD	LF	50		$0.00
430174172	PIPE CULVERT, OPTIONAL MATERIAL, ROUND, 72"SD	LF	50		$0.00
430174215	PIPE CULVERT, OPTIONAL MATERIAL, OTHER SHAPE - ELLIP/ARCH, 15"SD	LF	50		$0.00
430174218	PIPE CULVERT, OPTIONAL MATERIAL, OTHER SHAPE - ELLIP/ARCH, 18"SD	LF	50		$0.00
430174224	PIPE CULVERT, OPTIONAL MATERIAL, OTHER SHAPE - ELLIP/ARCH, 24"SD	LF	50		$0.00
430174230	PIPE CULVERT, OPTIONAL MATERIAL, OTHER SHAPE - ELLIP/ARCH, 30"SD	LF	50		$0.00
430174236	PIPE CULVERT, OPTIONAL MATERIAL, OTHER SHAPE - ELLIP/ARCH, 36"SD	LF	50		$0.00
430174242	PIPE CULVERT, OPTIONAL MATERIAL, ELLIP/OTHER, 42"SD	LF	50		$0.00
430174248	PIPE CULVERT,OPTIONAL MATERIAL,OTHER-ELIP/ARCH, 48"SD	LF	50		$0.00
430175112	PIPE CULVERT,OPTIONAL MATERIAL,ROUND, 12"S/CD	LF	50		$0.00
430175115	PIPE CULVERT,OPTIONAL MATERIAL,ROUND, 15"S/CD	LF	50		$0.00

430175118	PIPE CULVERT, OPTIONAL MATERIAL, ROUND, 18"S/CD	LF	250		$0.00
430175124	PIPE CULVERT, OPTIONAL MATERIAL, ROUND, 24"S/CD	LF	50		$0.00
430175130	PIPE CULVERT, OPT MATERIAL, ROUND, 30"S/CD	LF	50		$0.00
430175136	PIPE CULVERT, OPT MATERIAL, ROUND, 36"S/CD	LF	50		$0.00
430175140	PIPE CULVERT, OPT MATERIAL, ROUND, 40"S/CD	LF	50		$0.00
430175142	PIPE CULVERT, OPT MATERIAL, ROUND, 42"S/CD	LF	50		$0.00
430175148	PIPE CULVERT, OPT MATERIAL, ROUND, 48"S/CD	LF	50		$0.00
430175154	PIPE CULVERT, OPT MATERIAL, ROUND, 54"S/CD	LF	50		$0.00
430175160	PIPE CULVERT, OPT MATERIAL, ROUND, 60"S/CD	LF	50		$0.00
430175166	PIPE CULVERT, OPT MATERIAL, ROUND, 66"S/CD	LF	50		$0.00
430175172	PIPE CULVERT, OPT MATERIAL, ROUND, 72"S/CD	LF	50		$0.00
430175178	PIPE CULVERT, OPT MATERIAL, ROUND, 78" STORM/CROSS DRAIN	LF	50		$0.00
430175184	PIPE CULVERT, OPT MATERIAL, ROUND, 84"S/CD	LF	50		$0.00
430175196	PIPE CULVERT, OPT MATERIAL, ROUND, 96"S/CD	LF	50		$0.00
430175215	PIPE CULVERT,OPTIONAL MATERIAL,OTHER-ELIP/ARCH, 15"S/CD	LF	50		$0.00
430175218	PIPE CULVERT,OPTIONAL MATERIAL,OTHER-ELIP/ARCH, 18"S/CD	LF	50		$0.00
430175224	PIPE CULVERT,OPTIONAL MATERIAL,OTHER SHAPE-ELIP/ARCH, 24"S/CD	LF	50		$0.00
430175230	PIPE CULVERT, OPT MATERIAL, OTHER SHAPE - ELIP/ARCH, 30"S/CD	LF	50		$0.00
430175236	PIPE CULVERT, OPT MATERIAL, OTHER SHAPE - ELIP/ARCH, 36"S/CD	LF	50		$0.00
430175242	PIPE CULVERT, OPT MATERIAL, OTHER SHAPE - ELIP/ARCH, 42"S/CD	LF	50		$0.00
430175248	PIPE CULVERT, OPT MATERIAL, OTHER SHAPE - ELIP/ARCH, 48"S/CD	LF	50		$0.00
430175254	PIPE CULVERT, OPT MATERIAL, OTHER SHAPE - ELIP/ARCH, 54"S/CD	LF	50		$0.00
430175260	PIPE CULVERT, OPT MATERIAL, OTHER SHAPE - ELIP/ARCH, 60"S/CD	LF	50		$0.00
430175266	PIPE CULVERT, OPT MATERIAL, OTHER SHAPE - ELIP/ARCH, 66"S/CD	LF	50		$0.00
430175272	PIPE CULVERT, OPT MATERIAL, OTHER SHAPE - ELIP/ARCH, 72"S/CD	LF	50		$0.00
430175299	PIPE CULVERT,OPTIONAL MATERIAL,OTHER SHAPE-ELIP/ARCH, 99" OR >, S/CD	LF	50		$0.00
430185118	PIPE CULVERT,OPTIONAL MATERIAL,ROUND, JACK & BORE, 18" , STORM AND CROSS DRAIN	LF	50		$0.00
430185124	PIPE CULVERT,OPTIONAL MATERIAL,ROUND, JACK & BORE, 24", STORM AND CROSS DRAIN	LF	50		$0.00
430185130	PIPE CULVERT,OPTIONAL MATERIAL,ROUND, JACK & BORE, 30", STORM AND CROSS DRAIN	LF	50		$0.00

430185136	PIPE CULVERT,OPTIONAL MATERIAL,ROUND, JACK & BORE, 36", STORM AND CROSS DRAIN	LF	50		$0.00
430185142	PIPE CULVERT,OPTIONAL MATERIAL,ROUND, JACK & BORE, 42", STORM AND CROSS DRAIN	LF	50		$0.00
430185148	PIPE CULVERT,OPTIONAL MATERIAL,ROUND, JACK & BORE, 48", STORM AND CROSS DRAIN	LF	50		$0.00
430185154	PIPE CULVERT,OPTIONAL MATERIAL,ROUND, JACK & BORE, 54", STORM AND CROSS DRAIN	LF	50		$0.00
430185160	PIPE CULVERT,OPTIONAL MATERIAL,ROUND, JACK & BORE, 60" , STORM AND CROSS DRAIN	LF	50		$0.00
430185166	PIPE CULVERT,OPTIONAL MATERIAL,ROUND, JACK & BORE, 66" , STORM AND CROSS DRAIN	LF	50		$0.00
430185178	PIPE CULVERT,OPTIONAL MATERIAL,ROUND, JACK & BORE, 78" , STORM AND CROSS DRAIN	LF	50		$0.00
0430200 21	FLARED END SECTION, CONCRETE, 12"	EA	3		$0.00
0430200 23	FLARED END SECTION, CONCRETE, 15"	EA	3		$0.00
0430200 25	FLARED END SECTION, CONCRETE, 18"	EA	3		$0.00
0430200 29	FLARED END SECTION, CONCRETE, 24"	EA	3		$0.00
0430200 33	FLARED END SECTION, CONCRETE, 30"	EA	3		$0.00
0430200 38	FLARED END SECTION, CONCRETE, 36"	EA	3		$0.00
0430200 40	FLARED END SECTION, CONCRETE, 42"	EA	3		$0.00
0430200 41	FLARED END SECTION, CONCRETE, 48"	EA	3		$0.00
0430200 42	FLARED END SECTION, CONCRETE, 54"	EA	3		$0.00
0430200 43	FLARED END SECTION, CONCRETE, 60"	EA	3		$0.00
0430200 44	FLARED END SECTION, CONCRETE, 66"	EA	3		$0.00
0430200 45	FLARED END SECTION, CONCRETE, 72"	EA	3		$0.00
430600025	U-ENDWALL, STD 260, 1:6 SLOPE, 18"PIPE	EA	3		$0.00
430600125	U-ENDWALL, STD 260, 1:4 SLOPE, 18"PIPE	EA	3		$0.00
430602123	U-ENDWALL, WITH GRATE,STD INDEX 260, 1:4 SLOPE, 15"	EA	3		$0.00
430602125	U-ENDWALL, WITH GRATE,STD 260, 1:4 SLOPE, 18"	EA	3		$0.00
430602129	U-ENDWALL, WITH GRATE,STD 260, 1:4 SLOPE, 24"	EA	3		$0.00
430602133	U-ENDWALL, WITH GRATE,STD INDEX 260, 1:4 SLOPE, 30"	EA	3		$0.00
430610025	U-ENDWALL, STD 261, 1:6 SLOPE, 18"PIPE	EA	3		$0.00
430610029	U-ENDWALL, STD 261, 1:6 SLOPE, 24"PIPE	EA	3		$0.00
430610033	U-ENDWALL, STD 261, 1:6 SLOPE, 30"PIPE	EA	3		$0.00
430610123	U-ENDWALL, STD 261, 1:4 SLOPE, 15"PIPE	EA	3		$0.00

430610125	U-ENDWALL, STD 261, 1:4 SLOPE, 18"PIPE	EA	3		$0.00
430610129	U-ENDWALL, STD 261, 1:4 SLOPE, 24"PIPE	EA	3		$0.00
430610133	U-ENDWALL, STD 261, 1:4 SLOPE, 30"PIPE	EA	3		$0.00
430610223	U-ENDWALL, STD 261, 1:3 SLOPE, 15"PIPE	EA	3		$0.00
430610225	U-ENDWALL, STD 261, 1:3 SLOPE, 18"PIPE	EA	3		$0.00
430610229	U-ENDWALL, STD 261, 1:3 SLOPE, 24"PIPE	EA	3		$0.00
430610233	U-ENDWALL, STD 261, 1:3 SLOPE, 30"PIPE	EA	3		$0.00
430610323	U-ENDWALL, STD 261, 1:2 SLOPE, 15"PIPE	EA	3		$0.00
430610325	U-ENDWALL, STD 261, 1:2 SLOPE, 18"PIPE	EA	3		$0.00
430610329	U-ENDWALL, STD 261,1:2 SLOPE, 24"PIPE	EA	3		$0.00
430611023	U-ENDWALL, STD 261, BAFFLES, 1:6 SLOPE, 15"PIPE	EA	3		$0.00
430611025	U-ENDWALL, STD 261, BAFFLES, 1:6 SLOPE, 18"PIPE	EA	3		$0.00
430611029	U-ENDWALL, STD 261, BAFFLES, 1:6 SLOPE, 24"PIPE	EA	3		$0.00
430611033	U-ENDWALL, STD 261, BAFFLES, 1:6 SLOPE, 30"PIPE	EA	3		$0.00
430611123	U-ENDWALL WITH BAFFLES, STD 261, 1:4 SLOPE, 15"PIPE	EA	3		$0.00
430611125	U-ENDWALL WITH BAFFLES, STD 261, 1:4 SLOPE, 18"PIPE	EA	3		$0.00
430611129	U-ENDWALL WITH BAFFLES, STD 261, 1:4 SLOPE, 24"PIPE	EA	3		$0.00
430611133	U-ENDWALL WITH BAFFLES,STD 261,1:4 SLOPE,30"PIPE	EA	3		$0.00
430611223	U-ENDWALL WITH BAFFLES, STD 261, 1:3 SLOPE, 15"PIPE	EA	3		$0.00
430611225	U-ENDWALL WITH BAFFLES, STD 261, 1:3 SLOPE, 18"PIPE	EA	3		$0.00
430611229	U-ENDWALL WITH BAFFLES, STD 261, 1:3 SLOPE, 24"PIPE	EA	3		$0.00
430611233	U-ENDWALL, STD 261, BAFFLES, 1:3 SLOPE, 30"PIPE	EA	3		$0.00
430611323	U-ENDWALL WITH BAFFLES, STD 261, 1:2 SLOPE, 15"PIPE	EA	3		$0.00
430611325	U-ENDWALL WITH BAFFLES, STD 261, 1:2 SLOPE, 18"PIPE	EA	3		$0.00
430611329	U-ENDWALL WITH BAFFLES, STD 261, 1:2 SLOPE, 24"PIPE	EA	3		$0.00
430611333	U-ENDWALL, BAFFLES, STD 261, 1:2 SLOPE, 30"PIPE	EA	3		$0.00
430612023	U-ENDWALL WITH GRATE, STD 261, 1:6 SLOPE, 15"	EA	3		$0.00
430612025	U-ENDWALL WITH GRATE, STD 261, 1:6 SLOPE, 18"PIPE	EA	3		$0.00
430612029	U-ENDWALL WITH GRATE, STD 261, 1:6 SLOPE, 24"PIPE	EA	3		$0.00

430612033	U-ENDWALL WITH GRATE, STD 261, 1:6 SLOPE, 30"	EA	3		$0.00
430612125	U-ENDWALL WITH GRATE, STD 261, 1:4 SLOPE, 18"PIPE	EA	3		$0.00
430612129	U-ENDWALL WITH GRATE, STD 261, 1:4 SLOPE, 24"PIPE	EA	3		$0.00
430612133	U-ENDWALL, GRATE, STD 261, 1:4 SLOPE, 30" PIPE	EA	3		$0.00
430612329	U-ENDWALL WITH GRATE, STD 261, 1:2 SLOPE, 24"PIPE	EA	3		$0.00
430612333	U-ENDWALL, GRATE, STD 261, 1:2 SLOPE, 30" PIPE	EA	3		$0.00
430613025	U-ENDWALL, WITH BAFFLES & GRATE, STD 261,1:6 SLOPE, 18"	EA	3		$0.00
430613029	U-ENDWALL, WITH BAFFLES & GRATE, STD 261,1:6 SLOPE, 24"PIPE	EA	3		$0.00
430613033	U-ENDWALL, WITH BAFFLES & GRATE, STD 261,1:6 SLOPE, 30"	EA	3		$0.00
430613123	U-ENDWALL, WITH BAFFLES & GRATE, STD 261,1:4 SLOPE,15"PIPE	EA	3		$0.00
430613125	U-ENDWALL, WITH BAFFLES & GRATE, STD 261,1:4 SLOPE,18"PIPE	EA	3		$0.00
430613129	U-ENDWALL, WITH BAFFLES & GRATE, STD 261,1:4 SLOPE, 24"PIPE	EA	3		$0.00
430613133	U-ENDWALL, WITH BAFFLES & GRATE, STD 261,1:4 SLOPE,30"PIPE	EA	3		$0.00
430613225	U-ENDWALL, WITH BAFFLES & GRATE, STD 261,1:3 SLOPE,18"PIPE	EA	3		$0.00
430613229	U-ENDWALL, WITH BAFFLES & GRATE, STD 261,1:3 SLOPE, 24 "PIPE	EA	3		$0.00
430613233	U-ENDWALL, WITH BAFFLES & GRATE, STD 261,1:3 SLOPE,30"PIPE	EA	3		$0.00
430613325	U-ENDWALL, WITH BAFFLES & GRATE, STD 261,1:2 SLOPE,18"PIPE	EA	3		$0.00
430613333	U-ENDWALL, WITH BAFFLES & GRATE, STD 261,1:2 SLOPE,30"PIPE	EA	3		$0.00
430830	PIPE FILLING AND PLUGGING- PLACE OUT OF SERVICE	CY	20		$0.00
430950	DESILTING CONCRETE BOX CULVERT	CY	20		$0.00
0430963 1	PVC PIPE FOR BACK OF SIDEWALK, 4"	LF	50		$0.00
430982120	MITERED END SECTION, OPTIONAL ROUND, 8" CD	EA	3		$0.00
430982121	MITERED END SECTION, OPTIONAL ROUND, 12" CD	EA	3		$0.00
430982123	MITERED END SECTION, OPTIONAL ROUND, 15" CD	EA	3		$0.00
430982125	MITERED END SECTION, OPTIONAL ROUND, 18" CD	EA	3		$0.00
430982129	MITERED END SECTION, OPTIONAL ROUND, 24" CD	EA	3		$0.00
430982133	MITERED END SECTION, OPTIONAL ROUND, 30" CD	EA	3		$0.00
430982138	MITERED END SECTION, OPTIONAL ROUND, 36" CD	EA	3		$0.00
430982140	MITERED END SECTION, OPTIONAL ROUND, 42" CD	EA	3		$0.00

430982141	MITERED END SECTION, OPTIONAL ROUND, 48" CD	EA	3		$0.00
430982142	MITERED END SECTION, OPTIONAL ROUND, 54" CD	EA	3		$0.00
430982143	MITERED END SECTION, OPTIONAL ROUND, 60" CD	EA	3		$0.00
430982144	MITERED END SECTION, OPTIONAL ROUND, 66" CD	EA	3		$0.00
430982145	MITERED END SECTION, OPTIONAL ROUND, 72" CD	EA	3		$0.00
430982147	MITERED END SECTION, OPTIONAL ROUND, 84" CD	EA	3		$0.00
430982623	MITERED END SECTION, OPTIONAL - ELLIPTICAL / ARCH, 15" CD	EA	3		$0.00
430982625	MITERED END SECTION, OPTIONAL - ELLIPTICAL / ARCH, 18" CD	EA	3		$0.00
430982629	MITERED END SECTION, OPTIONAL - ELLIPTICAL / ARCH, 24" CD	EA	3		$0.00
430982633	MITERED END SECTION, OPTIONAL - ELLIPTICAL / ARCH, 30" CD	EA	3		$0.00
430982638	MITERED END SECTION, OPTIONAL - ELLIPTICAL / ARCH, 36" CD	EA	3		$0.00
430982640	MITERED END SECTION, OPTIONAL - ELLIPTICAL / ARCH, 42" CD	EA	3		$0.00
430982641	MITERED END SECTION, OPTIONAL - ELLIPTICAL / ARCH, 48" CD	EA	3		$0.00
430982642	MITERED END SECTION, OPTIONAL - ELLIPTICAL / ARCH, 54" CD	EA	3		$0.00
430982643	MITERED END SECTION, OPTIONAL - ELLIPTICAL / ARCH, 60" CD	EA	3		$0.00
430982645	MITERED END SECTION, OPTIONAL - ELLIPTICAL / ARCH, 72" CD	EA	3		$0.00
430984120	MITERED END SECTION, OPTIONAL ROUND, 8" SD	EA	3		$0.00
430984121	MITERED END SECTION, OPTIONAL ROUND, 12" SD	EA	3		$0.00
430984123	MITERED END SECTION, OPTIONAL ROUND, 15" SD	EA	3		$0.00
430984125	MITERED END SECTION, OPTIONAL ROUND, 18" SD	EA	3		$0.00
430984129	MITERED END SECTION, OPTIONAL ROUND, 24" SD	EA	3		$0.00
430984133	MITERED END SECTION , OPTIONAL ROUND, 30" SD	EA	3		$0.00
430984138	MITERED END SECTION , OPTIONAL ROUND, 36" SIDE DRAIN	EA	3		$0.00
430984140	MITERED END SECTION , OPTIONAL ROUND, 42" SD	EA	3		$0.00
430984141	MITERED END SECTION , OPTIONAL ROUND, 48" SD	EA	3		$0.00
430984142	MITERED END SECTION , OPTIONAL ROUND, 54" SD	EA	3		$0.00
430984143	MITERED END SECTION , OPTIONAL ROUND, 60" SD	EA	3		$0.00
430984144	MITERED END SECTION, OPTIONAL ROUND, 66" SIDE DRAIN	EA	3		$0.00
430984145	MITERED END SECTION, OPTIONAL ROUND, 72" SIDE DRAIN	EA	3		$0.00

430984147	MITERED END SECTION, OPTIONAL ROUND, 84" SD	EA	3		$0.00
430984623	MITERED END SECTION, OPTIONAL OTHER - ELLIP/ARCH, 15" SD	EA	3		$0.00
430984625	MITERED END SECT, OPTIONAL - ELLIPTICAL / ARCH, 18" SD	EA	3		$0.00
430984629	MITERED END SECT, OPTIONAL - ELLIPTICAL / ARCH, 24" SD	EA	3		$0.00
430984633	MITERED END SECT, OPTIONAL /ELLIP/ARCH, 30" SD	EA	3		$0.00
430984638	MITERED END SECT, OPTIONAL /ELLIP/ARCH, 36" SD	EA	3		$0.00
430984640	MITERED END SECT, OPTIONAL /ELLIP/ARCH, 42" SD	EA	3		$0.00
430984641	MITERED END SECT, OPTIONAL /ELLIP/ARCH, 48" SD	EA	3		$0.00
430984642	MITERED END SECT, OPTIONAL /ELLIP/ARCH, 54" SD	EA	3		$0.00
430984643	MITERED END SECTION, OPTIONAL SHAPE /ELLIP/ARCH, 60" SIDE DRAIN	EA	3		$0.00
430984644	MITERED END SECT, OPTIONAL /ELLIP/ARCH, 66" SD	EA	3		$0.00
430984645	MITERED END SECT, OPTIONAL /ELLIP/ARCH, 72" SD	EA	3		$0.00
430990	MITERED END SECT, REPLACE GRATE	EA	3		$0.00
0431 1 1	PIPE LINER, OPTIONAL MATERIAL, 0-24"	LF	50		$0.00
0431 1 2	PIPE LINER, OPTIONAL MATERIAL, 25-36"	LF	50		$0.00
0431 1 3	PIPE LINER, OPTIONAL MATERIAL, 37-48"	LF	50		$0.00
0431 1 4	PIPE LINER, OPTIONAL MATERIAL, 49 - 60"	LF	50		$0.00
0431 1 5	PIPE LINER, OPTIONAL MATERIAL, 61" AND GREATER	LF	50		$0.00
0436 1 1	TRENCH DRAIN, STANDARD	LF	50		$0.00
0440 1 10	UNDERDRAIN, TYPE I	LF	50		$0.00
0440 1 20	UNDERDRAIN, TYPE II	LF	50		$0.00
0440 1 30	UNDERDRAIN, TYPE III	LF	50		$0.00
0440 1 50	UNDERDRAIN, TYPE V	LF	50		$0.00
0440 70	UNDERDRAIN INSPECTION BOX	EA	5		$0.00
0440 73 1	UNDERDRAIN OUTLET PIPE, 4"	LF	50		$0.00
0440 73 2	UNDERDRAIN OUTLET PIPE, 6"	LF	50		$0.00
0440 73 3	UNDERDRAIN OUTLET PIPE, 8"	LF	50		$0.00
0440 73 4	UNDERDRAIN OUTLET PIPE, 10"	LF	50		$0.00
0440 73 5	UNDERDRAIN OUTLET PIPE, 12"	LF	50		$0.00

0443 70 3	FRENCH DRAIN, 18"	LF	50		$0.00
0443 70 4	FRENCH DRAIN, 24"	LF	50		$0.00
0443 70 5	FRENCH DRAIN, 30"	LF	50		$0.00
0443 70 6	FRENCH DRAIN, 36"	LF	50		$0.00
0443 70 7	FRENCH DRAIN, 42"	LF	50		$0.00
0443 70 8	FRENCH DRAIN, 48"	LF	50		$0.00
0443 70 9	FRENCH DRAIN, 54"	LF	50		$0.00
0443 70 10	FRENCH DRAIN, 60"	LF	50		$0.00
0443 72 10	FRENCH DRAIN- AGGREGATE WITHOUT PIPE, 0-0.9’ DEPTH	SY	10		$0.00
0443 72 11	FRENCH DRAIN- AGGREGATE WITHOUT PIPE, 1-1.9’ DEPTH	SY	10		$0.00
0443 72 12	FRENCH DRAIN- AGGREGATE WITHOUT PIPE, 2-2.9’ DEPTH	SY	10		$0.00
0443 72 13	FRENCH DRAIN- AGGREGATE WITHOUT PIPE, 3-3.9’ DEPTH	SY	10		$0.00
0443 72 14	FRENCH DRAIN- AGGREGATE WITHOUT PIPE, 4-4.9’ DEPTH	SY	10		$0.00
0446 1 1	EDGEDRAIN DRAINCRETE, STANDARD	LF	50		$0.00
0446 71 1	EDGEDRAIN OUTLET PIPE, 4"	LF	50		$0.00
0515 1 1	PIPE HANDRAIL - GUIDERAIL, STEEL	LF	50		$0.00
0515 1 2	PIPE HANDRAIL - GUIDERAIL, ALUMINUM	LF	50		$0.00
0515 1 41	PIPE HANDRAIL - GUIDERAIL, RELOCATE, STEEL	LF	50		$0.00
0515 1 42	PIPE HANDRAIL - GUIDERAIL, RELOCATE, ALUMINUM	LF	50		$0.00
0515 2111	PEDESTRIAN / BICYCLE RAILING, NS, 42" TYPE 1	LF	50		$0.00
0515 2211	PEDESTRIAN / BICYCLE RAILING, STEEL, 42" TYPE 1	LF	50		$0.00
0515 2212	PEDESTRIAN / BICYCLE RAILING, STEEL, 42" TYPE 2	LF	50		$0.00
0515 2213	PEDESTRIAN / BICYCLE RAILING, STEEL, 42" TYPE 3	LF	50		$0.00
0515 2221	PEDESTRIAN/ BICYCLE RAILING, STEEL ONLY,54" TYPE 1	LF	50		$0.00
0515 2231	PEDESTRIAN/ BICYCLE RAILING, STEEL ONLY,48" TYPE 1	LF	50		$0.00
0515 2311	PEDESTRIAN/ BICYCLE RAILING, ALUMINUM ONLY,42" TYPE 1	LF	50		$0.00
0515 2312	PEDESTRIAN / BICYCLE RAILING, ALUMINUM, 42" TYPE 2	LF	50		$0.00
0515 2313	PEDESTRIAN / BICYCLE RAILING, ALUMINUM, 42" TYPE 3	LF	50		$0.00
0515 2321	PEDESTRIAN/ BICYCLE RAILING, ALUMINUM ONLY,54" TYPE 1	LF	50		$0.00

0515 2411	PEDESTRIAN / BICYCLE RAILING, SPECIAL MATERIALS- WEATHERING STEEL, 42" TYPE 1	LF	50		$0.00
0515 2500	PEDESTRIAN / BICYCLE RAILING, RELOCATE	LF	50		$0.00
0519 78	BOLLARDS	EA	10		$0.00
0520 1 7	CONCRETE CURB & GUTTER, TYPE E	LF	1000		$0.00
0520 1 10	CONCRETE CURB & GUTTER, TYPE F	LF	5000		$0.00
0520 1 11	CONCRETE CURB & GUTTER, VARIABLE HEIGHT TYPE F	LF	100		$0.00
0520 1 12	CONCRETE CURB & GUTTER, TYPE F WITH SPECIAL GUTTER PROFILE	LF	100		$0.00
0520 2 1	CONCRETE CURB, TYPE A	LF	100		$0.00
0520 2 2	CONCRETE CURB, TYPE B	LF	1000		$0.00
0520 2 4	CONCRETE CURB, TYPE D	LF	1000		$0.00
0520 3	VALLEY GUTTER- CONCRETE	LF	100		$0.00
0520 5 11	TRAFFIC SEPARATOR CONCRETE - TYPE I, 4' WIDE	LF	50		$0.00
0520 5 12	TRAFFIC SEPARATOR CONCRETE - TYPE I, 6' WIDE	LF	50		$0.00
520 5 16	TRAFFIC SEPARATOR CONCRETE- TYPE I, 8.5' WIDE	LF	50		$0.00
0520 5 21	TRAFFIC SEPARATOR - CONCRETE, TYPE II, 4' WIDE	LF	50		$0.00
0520 5 22	TRAFFIC SEPARATOR - CONCRETE, TYPE II, 6' WIDE	LF	50		$0.00
0520 5 26	TRAFFIC SEPARATOR CONCRETE- TYPE II, 8.5' WIDE	LF	50		$0.00
0520 5 41	TRAFFIC SEPARATOR CONCRETE, TYPE IV, 4' WIDE	LF	50		$0.00
0520 5 42	TRAFFIC SEPARATOR CONCRETE, TYPE IV, 6' WIDE	LF	50		$0.00
0520 5 46	TRAFFIC SEPARATOR CONCRETE, TYPE IV, 8.5' WIDE	LF	50		$0.00
0520 5 51	TRAF SEP CONC, TYPE V, 4' WIDE	LF	50		$0.00
0520 6	SHOULDER GUTTER- CONCRETE	LF	50		$0.00
0520 70	CONCRETE TRAFFIC SEPARATOR, SPECIAL - VARIABLE WIDTH	SY	50		$0.00
0521 72 2	SHOULDER CONCRETE BARRIER WALL, BOX CULVERT	LF	100		$0.00
0521 72 3	SHOULDER CONCRETE BARRIER WALL, RIGID-SHOULDER	LF	100		$0.00
0521 72 4	SHOULDER CONCRETE BARRIER WALL, RIGID RETAINING	LF	100		$0.00
0521 72 5	SHOULDER CONCRETE BARRIER WALL, RIGID-CURB & GUTTER	LF	100		$0.00
0521 72 10	SHOULDER CONCRETE BARRIER WALL, RIGID SHOULDER 42"	LF	100		$0.00
0521 72 11	SHOULDER CONCRETE BARRIER WALL, RIGID SHOULDER 54"	LF	100		$0.00

0521 73	CONCRETE BARRIER WALL, REMOVAL	LF	20		$0.00
0522 1	CONCRETE SIDEWALK AND DRIVEWAY, 4" THICK	SY	3000		$0.00
0522 2	CONCRETE SIDEWALK AND DRIVEWAY, 6" THICK	SY	500		$0.00
0522 3	BUS BOARDING PAD - CONCRETE	SY	50		$0.00
0522 4	BUS SHELTER PAD - CONCRETE	SY	50		$0.00
0524 1 1	CONCRETE DITCH PAVT, NON REINFORCED, 3"	SY	10		$0.00
0524 1 2	CONCRETE DITCH PAVEMENT, NON REINFORCED, 4"	SY	10		$0.00
0524 1 3	CONCRETE DITCH PAVEMENT, NON REINFORCED, 5"	SY	10		$0.00
0524 1 4	CONCRETE DITCH PAVEMENT, NON REINFORCED, 6"	SY	10		$0.00
0524 1 19	CONCRETE DITCH PAVT, 3", REINFORCED	SY	10		$0.00
0524 1 29	CONCRETE DITCH PAVEMENT, 4", REINFORCED	SY	10		$0.00
0524 1 49	CONCRETE DITCH PAVEMENT, 6", REINFORCED	SY	10		$0.00
0524 2 1	CONCRETE SLOPE PAVEMENT,NON REINFORCED, 3"	SY	10		$0.00
0524 2 2	CONCRETE SLOPE PAVEMENT,NON REINFORCED, 4"	SY	10		$0.00
0524 2 4	CONCRETE SLOPE PAVEMENT,NON REINFORCED, 6"	SY	10		$0.00
0524 2 29	CONCRETE SLOPE PAVEMENT, 4", REINFORCED	SY	10		$0.00
0524 2 49	CONCRETE SLOPE PAVEMENT, 6", REINFORCED	SY	10		$0.00
0524 3	CONC CORE DITCH BLOCKS	CY	10		$0.00
0526 1 1	PAVERS, ARCHITECTURAL, ROADWAY	SY	50		$0.00
0526 1 2	PAVERS, ARCHITECTURAL, SIDEWALK	SY	50		$0.00
0527 2	DETECTABLE WARNINGS	SF	1000		$0.00
0530 1	RIPRAP, SAND-CEMENT	CY	50		$0.00
0530 3 3	RIPRAP- RUBBLE, BANK AND SHORE	TN	10		$0.00
0530 3 4	RIPRAP, RUBBLE, F&I, DITCH LINING	TN	10		$0.00
0530 3 5	RIPRAP- RUBBLE, COASTAL SHORE- LARGE BOULDERS	TN	10		$0.00
0530 74	BEDDING STONE	TN	10		$0.00
0536 1 0	GUARDRAIL -ROADWAY, GENERAL TL-2	LF	250		$0.00
0536 1 1	GUARDRAIL -ROADWAY, GENERAL TL-3	LF	250		$0.00
0536 1 3	GUARDRAIL ROADWAY, DOUBLE FACE	LF	250		$0.00

0536 1 11	GUARDRAIL, ROADWAY, MODIFIED THRIE BEAM	LF	250		$0.00
0536 1 12	GUARDRAIL ROADWAY, MODIFIED THRIE BEAM-DOUBLE FACE	LF	250		$0.00
0536 5 1	RUB RAIL FOR GUARDRAIL, SINGLE SIDED	LF	250		$0.00
0536 5 2	RUB RAIL FOR GUARDRAIL, DOUBLE SIDED	LF	250		$0.00
0536 7 1	SPECIAL GUARDRAIL POST- DEEP POST FOR SLOPE BREAK CONDITION-TIMBER OR STEEL	EA	5		$0.00
0536 7 2	SPECIAL GUARDRAIL POST- SPECIAL STEEL POST FOR CONCRETE STRUCTURE MOUNT	EA	5		$0.00
0536 7 3	SPECIAL GUARDRAIL POST- ENCASED POST FOR SHALLOW MOUNT	EA	5		$0.00
0536 7 4	SPECIAL GUARDRAIL POST- FRANGIBLE LEAVE-OUT FOR MOUNTING THROUGH CONCRETE SURFACE	EA	5		$0.00
0536 8 11	APPROACH TRANSITION TO RIGID BARRIER- BRIDGE ANCHORAGE ASSEMBLY CONNECTION, FURNISH & INSTALL	EA	5		$0.00
0536 8 12	APPROACH TRANSITION CONNECTION TO RIGID BARRIER, FURNISH AND INSTALL, TL-2	EA	5		$0.00
0536 8 13	APPROACH TRANSITION CONNECTION TO RIGID BARRIER, FURNISH AND INSTALL, TL-3	EA	5		$0.00
0536 8 40	APPROACH TRANSITION TO RIGID BARRIER- BRIDGE ANCHORAGE ASSEMBLY, RELOCATE	EA	5		$0.00
0536 8 60	APPROACH TRANSITION TO RIGID BARRIER- BRIDGE ANCHORAGE ASSEMBLY, REMOVE	EA	5		$0.00
0536 73	GUARDRAIL REMOVAL	LF	25		$0.00
0536 85 22	GUARDRAIL END ANCHORAGE ASSEMBLY/END TREATMENT- FLARED	EA	2		$0.00
0536 85 24	GUARDRAIL END ANCHORAGE ASSEMBLY/END TREATMENT- PARALLEL	EA	2		$0.00
0536 85 25	GUARDRAIL END ANCHORAGE ASSEMBLY/END TREATMENT- TYPE II	EA	2		$0.00
0536 85 26	GUARDRAIL END ANCHORAGE ASSEMBLY/END TREATMENT- TYPE CRT	EA	2		$0.00
0536 85 27	GUARDRAIL END ANCHORAGE ASSEMBLY/END TREATMENT- DOUBLE FACE TERMINAL	EA	2		$0.00
0538 1	GUARDRAIL- RESET	LF	25		$0.00
0539 80111	OPAQUE VISUAL BARRIER, F&I, CONCRETE, 2' 3"	LF	25		$0.00
0544 74 40	RELOCATE CRASH CUSHION - ALL OPTIONS	EA	2		$0.00
0544 75 1	CRASH CUSHION	EA	2		$0.00
0546 71	RUMBLE STRIPS	PS	10		$0.00
0546 72 52	RUMBLE STRIPS, GROUND-IN, 16" CENTERLINE USED WITH RUMBLE STRIPE	GM	1		$0.00
0546 72 53	RUMBLE STRIPS, GROUND-IN, 8" EDGELINE USED WITH RUMBLE STRIPE	GM	1		$0.00
0546 72 55	RUMBLE STRIPS, GROUND-IN, 16" SHOULDER	GM	1		$0.00
0550 10110	FENCING, TYPE A, 0.0-5.0', STANDARD	LF	25		$0.00
0550 10118	FENCING, TYPE A, 0.0-5.0', TYPE A STANDARD, RESET EXISTING	LF	25		$0.00

0550 10119	FENCING, TYPE A, 0.0-5.0', SPECIAL FEATURES	LF	25		$0.00
0550 10120	FENCING, TYPE A, 5.1-6.0, STANDARD	LF	25		$0.00
0550 10128	FENCING, TYPE A, 5.1-6.0', RESET EXISTING	LF	25		$0.00
0550 10130	FENCING, TYPE A, 6.1-7.0, STANDARD	LF	25		$0.00
0550 10140	FENCING, TYPE A, 7.1-8.0', STANDARD	LF	25		$0.00
0550 10148	FENCING, TYPE A, 7.1-8.0', RESET EXISTING	LF	25		$0.00
0550 10149	FENCING, TYPE A, 7.1-8.0', SPECIAL FEATURES	LF	25		$0.00
0550 10150	FENCING, TYPE A, 8.1-10.0', STANDARD	LF	25		$0.00
0550 10158	FENCING, TYPE A, 8.1-10.0', RESET EXISTING	LF	25		$0.00
0550 10159	FENCING, TYPE A, 8.1-10.0', SPECIAL FEATURES	LF	25		$0.00
0550 10169	FENCING, TYPE A, 10.1-12.0', SPECIAL FEATURES	LF	25		$0.00
0550 10210	FENCING, TYPE B, 0.0-5.0', STANDARD FEATURES	LF	25		$0.00
0550 10212	FENCING, TYPE B, 0.5-5.0', W/ VINYL COATING	LF	25		$0.00
0550 10218	FENCING, TYPE B, 0.0-5.0', RESET EXISTING	LF	25		$0.00
0550 10219	FENCING, TYPE B, 0.0-5.0', SPECIAL FEATURES	LF	25		$0.00
0550 10220	FENCING, TYPE B, 5.1-6.0', STANDARD	LF	25		$0.00
0550 10221	FENCING, TYPE B, 5.1-6.0', W/ BARB WIRE ATTMT	LF	25		$0.00
0550 10222	FENCING, TYPE B, 5.1-6.0, W/ VINYL COATING	LF	25		$0.00
0550 10228	FENCING, TYPE B, 5.1-6.0, RESET EXISTING	LF	25		$0.00
0550 10229	FENCING, TYPE B, 5.1-6.0, SPECIAL FEATURES	LF	25		$0.00
0550 10230	FENCING, TYPE B, 6.1-7.0', STANDARD	LF	25		$0.00
0550 10231	FENCING, TYPE B, 6.1-7.0, W/ BARB WIRE ATTMT	LF	25		$0.00
0550 10232	FENCING, TYPE B, 6.1-7.0, W/ VINYL COATING	LF	25		$0.00
0550 10238	FENCING, TYPE B, 6.1-7.0, RESET EXISTING	LF	25		$0.00
0550 10240	FENCING, TYPE B, 7.1-8.0', STANDARD	LF	25		$0.00
0550 10242	FENCING, TYPE B, 7.1-8.0', VINYL COATING	LF	25		$0.00
0550 10248	FENCING, TYPE B, 7.1-8.0, RESET EXISTING	LF	25		$0.00
0550 10250	FENCING, TYPE B, 8.1-10.0', STANDARD FEATURES	LF	25		$0.00
0550 10251	FENCING, TYPE B, 8.1-10.0', WITH BARBED WIRE ATTMT	LF	25		$0.00

0550 10252	FENCING, TYPE B, 8.1-10.0', VINYL COATING	LF	25		$0.00
0550 10256	FENCING, TYPE B, 8-10.0', WITH VINYL COATING AND BARBED WIRE ATTACHMENT	LF	25		$0.00
0550 10258	FENCING, TYPE B, 8.1-10.0', RESET EXISTING FENCE	LF	25		$0.00
0550 10259	FENCING, TYPE B, 8.1-10.0', SPECIAL	LF	25		$0.00
0550 10266	FENCING, TYPE B, 10.1-12.0', WITH VINYL COATING AND BARBED WIRE ATTACHMENT	LF	25		$0.00
0550 10315	FENCING, TYPE R, 0-5.0', VERTICAL	LF	25		$0.00
0550 10325	FENCING, TYPE R, 5.1-6.0', VERTICAL	LF	25		$0.00
0550 10335	FENCING, TYPE R, 6.1-7.0', VERTICAL	LF	25		$0.00
0550 10343	FENCING, TYPE R, 7.1-8.0, W/FULL ENCLOSURE	LF	25		$0.00
0550 10344	FENCING, TYPE R, 7.1-8.0, W / PARTIAL ENCLOSURE	LF	25		$0.00
0550 10353	FENCING, TYPE R, 8.1 - 10.0', WITH FULL ENCLOSURE	LF	25		$0.00
0550 10354	FENCING, TYPE R, 8.1-10.0', WITH PARTIAL ENCLOSURE, TYPE R ONLY	LF	25		$0.00
0550 10355	FENCING, TYPE R, 8.1-10.0', VERTICAL	LF	25		$0.00
0550 10363	FENCING, TYPE R, GREATER THAN 10.0', WITH FULL ENCLOSURE	LF	25		$0.00
0570 1 2	PERFORMANCE TURF, SOD	SY	1500		$0.00
0571 1 11	PLASTIC EROSION MAT, TURF REINFORCED MAT, TYPE 1	SY	100		$0.00
0571 1 12	PLASTIC EROSION MAT, TRM, TYPE 2	SY	100		$0.00
0571 1 13	PLASTIC EROSION MAT, TURF REINFORCED MAT, TYPE 3	SY	100		$0.00
0591 1 2	4" LANDSCAPE SLEEVE (UNDERGROUND)	LF	50		$0.00
0591 1 2A	4" LANDSCAPE SLEEVE (BORED)	LF	50		$0.00
0630 2 11	CONDUIT, FURNISH & INSTALL, OPEN TRENCH	LF	1000		$0.00
0630 2 12	CONDUIT, FURNISH & INSTALL, DIRECTIONAL BORE	LF	1000		$0.00
0630 2 14	CONDUIT, FURNISH & INSTALL, ABOVEGROUND	LF	1000		$0.00
0630 2 15	CONDUIT, FURNISH & INSTALL, BRIDGE MOUNT	LF	100		$0.00
0630 2 65	CONDUIT, REMOVE, BRIDGE MOUNT	LF	100		$0.00
0654 001	RECTANGULAR RAPID FLASHING BEACON ASSEMBLY	EA	2		$0.00
0660 2101	LOOP ASSEMBLY- F&I, TYPE A	AS	20		$0.00
0660 2102	LOOP ASSEMBLY, F&I, TYPE B	AS	20		$0.00
0660 2103	LOOP ASSEMBLY, F&I, TYPE C	AS	20		$0.00

0660 2104	LOOP ASSEMBLY, F&I, TYPE D	AS	20		$0.00
0660 2105	LOOP ASSEMBLY, F&I, TYPE E	AS	20		$0.00
0660 2106	LOOP ASSEMBLY, F&I, TYPE F	AS	20		$0.00
0660 2107	LOOP ASSEMBLY, F&I, TYPE G	AS	20		$0.00
0660 3 11	VEHICLE DETECTION SYSTEM- MICROWAVE, FURNISH & INSTALL CABINET EQUIPMENT	EA	5		$0.00
0660 3 12	VEHICLE DETECTION SYSTEM- MICROWAVE, FURNISH & INSTALL, ABOVE GROUND EQUIPMENT	EA	5		$0.00
0700 1 11	SINGLE POST SIGN, F&I GROUND MOUNT, UP TO 12 SF	AS	50		$0.00
0700 1 12	SINGLE POST SIGN, F&I GROUND MOUNT, 12-20 SF	AS	20		$0.00
0700 1 13	SINGLE POST SIGN, F&I GROUND MOUNT, 21-30 SF	AS	5		$0.00
0700 1 14	SINGLE POST SIGN, F&I GROUND MOUNT, 31+ SF	AS	5		$0.00
0700 1 18	SINGLE POST SIGN, F&I GROUND MOUNT, IN-STREET FLEXIBLE POST	AS	5		$0.00
0700 1 21	SINGLE POST SIGN, F&I BARRIER MOUNT INDEX 11871 UP TO 12 SF	AS	5		$0.00
0700 1 22	SINGLE POST SIGN, F&I BARRIER MOUNT INDEX 11871 12-20 SF	AS	5		$0.00
0700 1 23	SINGLE POST SIGN, F&I BARRIER MOUNT INDEX 11871, 21-30 SF SHEETING AREA- BACK TO BACK	AS	5		$0.00
0700 1 31	SINGLE POST SIGN, F&I BRIDGE MOUNT INDEX 11870, UP TO 12 SF	AS	5		$0.00
0700 1 32	SINGLE POST SIGN, F&I BRIDGE MOUNT INDEX 11870, 12-20 SF	AS	5		$0.00
0700 1 33	SINGLE POST SIGN, F&I BRIDGE MOUNT INDEX 11870, 21-30 SF	AS	5		$0.00
0700 1 40	SINGLE POST SIGN, INSTALL	AS	5		$0.00
0700 1 50	SINGLE POST SIGN, RELOCATE	AS	10		$0.00
0700 1 60	SINGLE POST SIGN, REMOVE	AS	50		$0.00
0700 1 74	SINGLE POST SIGN, F&I CUSTOM, 31+ SF	AS	5		$0.00
0700 2 11	MULTI- POST SIGN, F&I GROUND MOUNT, UP TO 12 SF	AS	5		$0.00
0700 2 12	MULTI- POST SIGN, F&I GROUND MOUNT, 12-20 SF	AS	5		$0.00
0700 2 13	MULTI- POST SIGN, F&I GROUND MOUNT, 21-30 SF	AS	5		$0.00
0700 2 14	MULTI- POST SIGN, F&I GROUND MOUNT, 31-50 SF	AS	5		$0.00
0700 2 15	MULTI- POST SIGN, F&I GROUND MOUNT, 51-100 SF	AS	5		$0.00
0700 2 16	MULTI- POST SIGN, F&I GROUND MOUNT, 101-200 SF	AS	5		$0.00
0700 2 40	MULTI- POST SIGN, INSTALL	AS	5		$0.00
0700 2 50	MULTI- POST SIGN, F&I GROUND MOUNT, RELOCATE	AS	5		$0.00

0700 2 60	MULTI- POST SIGN, F&I GROUND MOUNT, REMOVE	AS	5		$0.00
0700 2 80	MULTI- POST SIGN, F&I GROUND MOUNT, REPAIR	AS	5		$0.00
0700 3101	SIGN PANEL, FURNISH & INSTALL GROUND MOUNT, UP TO 12 SF	EA	5		$0.00
0700 3102	SIGN PANEL, FURNISH & INSTALL GROUND MOUNT, 12-20 SF	EA	5		$0.00
0700 3103	SIGN PANEL, FURNISH & INSTALL GROUND MOUNT, 21-30 SF	EA	5		$0.00
0700 3104	SIGN PANEL, FURNISH & INSTALL GROUND MOUNT, 31-50 SF	EA	5		$0.00
0700 3105	SIGN PANEL, FURNISH & INSTALL GROUND MOUNT, 51-100 SF	EA	5		$0.00
0700 3106	SIGN PANEL, FURNISH & INSTALL GROUND MOUNT, 101-200 SF	EA	5		$0.00
0700 3201	SIGN PANEL, FURNISH & INSTALL OVERHEAD MOUNT, UP TO 12 SF	EA	5		$0.00
0700 3202	SIGN PANEL, FURNISH & INSTALL OVERHEAD MOUNT, 12-20 SF	EA	5		$0.00
0700 3203	SIGN PANEL, FURNISH & INSTALL OVERHEAD MOUNT, 21-30 SF	EA	5		$0.00
0700 3204	SIGN PANEL, FURNISH & INSTALL OVERHEAD MOUNT, 31-50 SF	EA	5		$0.00
0700 3205	SIGN PANEL, FURNISH & INSTALL OVERHEAD MOUNT, 51-100 SF	EA	5		$0.00
0700 3206	SIGN PANEL, FURNISH & INSTALL OVERHEAD MOUNT, 101-200 SF	EA	5		$0.00
0700 3401	SIGN PANEL, INSTALL, UP TO 12 SF	EA	5		$0.00
0700 3402	SIGN PANEL, INSTALL, 12-20 SF	EA	5		$0.00
0700 3403	SIGN PANEL, INSTALL, 21-30 SF,	EA	5		$0.00
0700 3404	SIGN PANEL, INSTALL, 31-50 SF	EA	5		$0.00
0700 3405	SIGN PANEL, INSTALL, 51-100 SF,	EA	5		$0.00
0700 3406	SIGN PANEL, INSTALL, 101-200 SF	EA	5		$0.00
0700 3501	SIGN PANEL, RELOCATE, UP TO 12 SF	EA	5		$0.00
0700 3502	SIGN PANEL, RELOCATE, 12-20 SF	EA	5		$0.00
0700 3503	SIGN PANEL, RELOCATE, 21-30 SF	EA	5		$0.00
0700 3504	SIGN PANEL, RELOCATE, 31-50 SF	EA	5		$0.00
0700 3505	SIGN PANEL, RELOCATE, 51-100 SF	EA	5		$0.00
0700 3506	SIGN PANEL, RELOCATE, 101-200 SF	EA	5		$0.00
0700 3601	SIGN PANEL, REMOVE, UP TO 12 SF	EA	5		$0.00
0700 3602	SIGN PANEL, REMOVE, 12-20 SF	EA	5		$0.00
0700 3603	SIGN PANEL, REMOVE, 21-30 SF	EA	5		$0.00

0700 3604	SIGN PANEL, REMOVE, 31-50 SF	EA	5		$0.00
0700 3605	SIGN PANEL, REMOVE, 51-100 SF	EA	5		$0.00
0700 3606	SIGN PANEL, REMOVE, 101-200 SF	EA	5		$0.00
0700 3624	SIGN PANEL, REMOVE, UP TO 50 SF WITH LIGHTING	EA	5		$0.00
0700 3625	SIGN PANEL, REMOVE, 51-100 SF WITH LIGHTING	EA	5		$0.00
0700 3626	SIGN PANEL, REMOVE, 101-200 SF WITH LIGHTING	EA	5		$0.00
0700 12 11	SIGN BEACON, F&I GROUND MOUNT- AC POWERED, ONE BEACON	AS	5		$0.00
0700 12 12	SIGN BEACON, F&I GROUND MOUNT- AC POWERED, TWO BEACONS	AS	5		$0.00
0700 12 21	SIGN BEACON, F&I GROUND MOUNT- SOLAR POWERED, ONE BEACON	AS	5		$0.00
0700 12 22	SIGN BEACON, F&I GROUND MOUNT- SOLAR POWERED, TWO BEACONS	AS	5		$0.00
0700 12 31	SIGN BEACON, F&I OVERHEAD MOUNT, ONE BEACON	AS	5		$0.00
0700 12 32	SIGN BEACON, F&I OVERHEAD MOUNT, TWO BEACONS	AS	5		$0.00
0700 12 50	SIGN BEACON, RELOCATE BEACON- SIGN TO REMAIN	AS	5		$0.00
0700 12 60	SIGN BEACON, REMOVE BEACON- SIGN TO REMAIN	AS	5		$0.00
0700 13 10	RETROREFLECTIVE SIGN STRIP- BACK OF RAIL ROAD CROSSBUCK SIGN BLADES	EA	5		$0.00
0700 13 12	RETROREFLECTIVE SIGN STRIP- FURNISH AND INSTALL, 2'	EA	5		$0.00
0700 13 15	RETROREFLECTIVE SIGN STRIP- FURNISH AND INSTALL, 5'	EA	5		$0.00
0701 17101	PROFILED THERMOPLASTIC,STANDARD- CONCRETE SURFACES, WHITE, SOLID,6"	GM	1		$0.00
0701 17201	PROFILED THERMOPLASTIC,STANDARD- CONCRETE SURFACES, YELLOW, SOLID,6"	GM	1		$0.00
0701 17221	PROFILED THERMOPLASTIC,STANDARD- CONCRETE SURFACES, YELLOW, SKIP,6"	GM	1		$0.00
0701 18101	PROFILED THERMOPLASTIC,STANDARD- ASPHALT SURFACES, WHITE, SOLID,6"	GM	1		$0.00
0701 18201	PROFILED THERMOPLASTIC,STANDARD- ASPHALT SURFACES, YELLOW, SOLID,6"	GM	1		$0.00
0701 18221	PROFILED THERMOPLASTIC,STANDARD- ASPHALT SURFACES, YELLOW, SKIP,6"	GM	1		$0.00
0705 10 1	OBJECT MARKER, TYPE 1	EA	5		$0.00
0705 10 2	OBJECT MARKER, TYPE 2	EA	5		$0.00
0705 10 3	OBJECT MARKER, TYPE 3	EA	5		$0.00
0705 10 4	OBJECT MARKER, TYPE 4	EA	5		$0.00
0705 11 1	DELINEATOR, FLEXIBLE TUBULAR	EA	50		$0.00
0705 11 2	DELINEATOR, NON-FLEXIBLE	EA	5		$0.00

0705 11 3	DELINEATOR, FLEXIBLE HIGH VISABILITY MEDIAN	EA	5		$0.00
0705 11 4	DELINEATOR, FLEXIBLE HIGH PERFORMANCE	EA	5		$0.00
0706 1 3	RAISED PAVEMENT MARKER, TYPE B	EA	200		$0.00
0710 90	PAINTED PAVEMENT MARKINGS, FINAL SURFACE	LS	5		$0.00
0710 11101	PAINTED PAVEMENT MARKINGS, STANDARD, WHITE, SOLID, 6"	GM	1		$0.00
0710 11102	PAINTED PAVEMENT MARKINGS, STANDARD, WHITE, SOLID FOR INTERCHANGE AND URBAN ISLAND, 8"	GM	1		$0.00
0710 11103	PAINTED PAVEMENT MARKINGS, STANDARD, WHITE, SOLID FOR INTERCHANGE MARKINGS, 12"	GM	1		$0.00
0710 11123	PAINTED PAVEMENT MARKINGS, STANDARD, WHITE, SOLID, 12"	LF	3000		$0.00
0710 11124	PAINTED PAVEMENT MARKINGS, STANDARD, WHITE, SOLID, 18"	LF	2000		$0.00
0710 11125	PAINTED PAVEMENT MARKINGS, STANDARD, WHITE, SOLID, 24"	LF	2000		$0.00
0710 11131	PAINTED PAVEMENT MARKINGS, STANDARD, WHITE, SKIP, 10-30 OR 3-9 SKIP, 6" WIDE	GM	1		$0.00
0710 11133	PAINTED PAVEMENT MARKING, STANDARD,WHITE, 3'-9' SKIP DROP LINE AND APPROACH TO TOLL PLAZA, 12" WIDE,	GM	1		$0.00
0710 11141	PAINTED PAVEMENT MARKINGS, STANDARD, WHITE, 2-4 DOTTED GUIDELINE/ 6-10 DOTTED EXTENSION, 6"	GM	1		$0.00
0710 11160	PAINTED PAVEMENT MARKINGS, STANDARD, WHITE, MESSAGE	EA	25		$0.00
0710 11170	PAINTED PAVEMENT MARKINGS, STANDARD, WHITE, ARROWS	EA	25		$0.00
0710 11180	PAINTED PAVEMENT MARKINGS, STANDARD, WHITE, YIELD LINE	LF	500		$0.00
0710 11190	PAINTED PAVEMENT MARKINGS, STANDARD, WHITE, ISLAND NOSE	SF	100		$0.00
0710 11201	PAINTED PAVEMENT MARKINGS, STANDARD, YELLOW, SOLID, 6"	GM	1		$0.00
0710 11202	PAINTED PAVEMENT MARKINGS, STANDARD, YELLOW, SOLID FOR INTERCHANGE AND URBAN ISLAND, 8"	GM	1		$0.00
0710 11203	PAINTED PAVEMENT MARKINGS, STANDARD, YELLOW, SOLID, 12"	GM	1		$0.00
0710 11223	PAINTED PAVEMENT MARKINGS, STANDARD, YELLOW, SOLID, 12"	LF	100		$0.00
0710 11224	PAINTED PAVEMENT MARKINGS, STANDARD, YELLOW, SOLID, 18"	LF	300		$0.00
0710 11225	PAINTED PAVEMENT MARKINGS, STANDARD, YELLOW, SOLID, 24"	LF	100		$0.00
0710 11231	PAINTED PAVEMENT MARKINGS, STANDARD, YELLOW, SKIP, 6"	GM	1		$0.00
0710 11241	PAINTED PAVEMENT MARKINGS, STANDARD, YELLOW, 2-4 DOTTED GUIDELINE/6-10 DOTTED EXTENSION, 6"	GM	1		$0.00
0710 11290	PAINTED PAVEMENT MARKINGS, STANDARD, YELLOW, ISLAND NOSE	SF	100		$0.00
0710 11331	PAINTED PAVEMENT MARKINGS, STANDARD,BLACK, SKIP, 6"	GM	1		$0.00
0710 11333	PAINTED PAVEMENT MARKING, STANDARD, BLACK, 3'-9' DOTTED LANE DROP AND APPROACH TO TOLL PLAZA, 12"	GM	1		$0.00
0710 11341	PAINTED PAVEMENT MARKINGS, STANDARD, BLACK, 2-4 DOTTED GUIDELINE/ 6-10 DOTTED EXTENSION, 6"	GM	1		$0.00

0710 11421	PAINTED PAVEMENT MARKINGS, STANDARD, BLUE, SOLID FOR PARKING LOT- ACCESSIBLE MARKINGS, 6"	LF	100		$0.00
0710 12231	PAINTED PAVEMENT MARKINGS, DURABLE, YELLOW, SKIP, 6"	GM	1		$0.00
0710 12421	PAINTED PAVEMENT MARKINGS, DURABLE, BLUE, SOLID FOR PARKING LOT-ACCESSIBLE MARKINGS, 6"	LF	100		$0.00
0711 11102	THERMOPLASTIC, STANDARD, WHITE, SOLID, 8" FOR INTERCHANGE AND URBAN ISLAND	GM	1		$0.00
0711 11103	THERMOPLASTIC, STANDARD, WHITE, SOLID, 12" FOR INTERCHANGE MARKINGS	GM	1		$0.00
0711 11123	THERMOPLASTIC, STANDARD, WHITE, SOLID, 12" FOR CROSSWALK AND ROUNDABOUT	LF	2500		$0.00
0711 11124	THERMOPLASTIC, STANDARD, WHITE, SOLID, 18" FOR DIAGONALS AND CHEVRONS	LF	500		$0.00
0711 11125	THERMOPLASTIC, STANDARD, WHITE, SOLID, 24" FOR STOP LINE AND CROSSWALK	LF	1500		$0.00
0711 11130	THERMOPLASTIC, STANDARD, WHITE, VERTICAL DEFLECTION MARKING	EA	10		$0.00
0711 11140	THERMOPLASTIC, STANDARD, WHITE, VERTICAL DEFLECTION ADVANCED WARNING MARKING	EA	10		$0.00
0711 11141	THERMOPLASTIC, STANDARD, WHITE, 2-4 DOTTED GUIDELINE/ 6-10 GAP EXTENSION, 6"	GM	1		$0.00
0711 11143	THERMOPLASTIC, STANDARD, WHITE, 2-4 DOTTED GUIDELINE, 12" FOR ROUNDABOUT	GM	1		$0.00
0711 11160	THERMOPLASTIC, STANDARD, WHITE, MESSAGE OR SYMBOL	EA	20		$0.00
0711 11170	THERMOPLASTIC, STANDARD, WHITE, ARROW	EA	20		$0.00
0711 11180	THERMOPLASTIC, STANDARD, WHITE, YIELD LINE	LF	250		$0.00
0711 11224	THERMOPLASTIC, STANDARD, YELLOW, SOLID, 18" FOR DIAGONAL OR CHEVRON	LF	250		$0.00
0711 11241	THERMOPLASTIC, STANDARD, YELLOW, 2-4 DOTTED GUIDE LINE /6-10 DOTTED EXTENSION LINE, 6"	GM	1		$0.00
0711 11421	THERMOPLASTIC, STANDARD, BLUE, SOLID,6"	LF	100		$0.00
0711 14123	THERMOPLASTIC, PREFORMED, WHITE, SOLID, 12"	LF	1000		$0.00
0711 14125	THERMOPLASTIC, PREFORMED, WHITE, SOLID, 24"	LF	1000		$0.00
0711 14141	THERMOPLASTIC, PREFORMED, WHITE, 2-4 DOTTED GUIDELINE ON CONCRETE SURFACES	GM	1		$0.00
0711 14160	THERMOPLASTIC, PREFORMED, WHITE, MESSAGE	EA	5		$0.00
0711 14170	THERMOPLASTIC, PREFORMED, WHITE, ARROWS	EA	20		$0.00
0711 14191	THERMOPLASTIC, PREFORMED, 6" WHITE, RAILROAD DYNAMIC ENVELOPE	LF	100		$0.00
0711 14193	THERMOPLASTIC, PREFORMED, 12" WHITE ON ASPHALT PAVEMENT, RAILROAD DYNAMIC ENVELOPE	LF	250		$0.00
0711 14194	THERMOPLASTIC, PREFORMED, 12" WHITE WITH 4" OUTSIDE BLACK CONTRAST ON CONCRETE PAVEMENT, RAILROAD DYNAMIC ENVELOPE	LF	100		$0.00
0711 14341	THERMOPLASTIC, PREFORMED, BLACK, 2-4 DOTTED GUIDELINE ON CONCRETE SURFACES	GM	1		$0.00
0711 14560	THERMOPLASTIC, PREFORMED, WHITE WITH BLACK CONTRAST ON CONCRETE PAVEMENT, MESSAGE OR SYMBOL	EA	5		$0.00
0711 14570	THERMOPLASTIC, PREFORMED, WHITE WITH BLACK CONTRAST, ARROW ON CONCRETE SURFACE	EA	5		$0.00

0711 15101	THERMOPLASTIC, STANDARD-OPEN GRADED ASPHALT SURFACES WHITE, SOLID, 6"	GM	1		$0.00
0711 15102	THERMOPLASTIC, STANDARD-OPEN GRADED ASPHALT SURFACES, WHITE, SOLID, 8"	GM	1		$0.00
0711 15131	THERMOPLASTIC, STANDARD-OPEN GRADED ASPHALT SURFACES, WHITE, SKIP, 6",10-30 SKIP OR 3-9 LANE DROP	GM	1		$0.00
0711 15133	THERMOPLASTIC, STANDARD-OPEN GRADED ASPHALT SURFACES, WHITE, SKIP, 12"- APPROACH TO TOLL PLAZA OR 3-9 LANE DROP	GM	1		$0.00
0711 15201	THERMOPLASTIC, STANDARD-OPEN GRADED ASPHALT SURFACES, YELLOW, SOLID, 6"	GM	1		$0.00
0711 15202	THERMOPLASTIC, STANDARD-OPEN GRADED ASPHALT SURFACES YELLOW, SOLID, 8"	GM	1		$0.00
0711 15231	THERMOPLASTIC, STANDARD-OPEN GRADED ASPHALT SURFACES, YELLOW, SKIP, 6"	GM	1		$0.00
0711 16101	THERMOPLASTIC, STANDARD-OTHER SURFACES, WHITE, SOLID, 6"	GM	3		$0.00
0711 16102	THERMOPLASTIC, STANDARD-OTHER SURFACES, WHITE, SOLID, 8"	GM	1		$0.00
0711 16131	THERMOPLASTIC, OTHER SURFACES, WHITE, SKIP, 6",10-30 SKIP OR 3-9 LANE DROP	GM	1		$0.00
0711 16133	THERMOPLASTIC, STANDARD-OTHER SURFACES WHITE, SKIP, 12"- APPROACH TO TOLL PLAZA OR 3-9 LANE DROP	GM	1		$0.00
0711 16201	THERMOPLASTIC, STANDARD-OTHER SURFACES, YELLOW, SOLID, 6"	GM	3		$0.00
0711 16202	THERMOPLASTIC, STANDARD-OTHER SURFACES, YELLOW, SOLID, 8"	GM	1		$0.00
0711 16231	THERMOPLASTIC, STANDARD-OTHER SURFACES, YELLOW, SKIP, 6"	GM	1		$0.00
0711 17	THERMOPLASTIC, REMOVE EXISTING THERMOPLASTIC PAVEMENT MARKINGS: NON-CONFLICTING ONLY	SF	500		$0.00
0711 12131	THERMOPLASTIC, REFURBISHMENT, WHITE, SKIP, 6"	GM	1		$0.00
0711 12160	THERMOPLASTIC, REFURBISH, WHITE, MESSAGE	EA	5		$0.00
0711 12170	THERMOPLASTIC, REFURBISH, WHITE, ARROWS	EA	5		$0.00
0711 12231	THERMOPLASTIC, REFURBISHMENT, YELLOW, SKIP, 6"	GM	1		$0.00
713103101	PERMANENT TAPE, WHITE, SOLID, 6" FOR CONCRETE BRIDGES	GM	1		$0.00
713103102	PERMANENT TAPE, WHITE, SOLID, 8" EXIT LANE AT INTERCHANGE ON CONCRETE PAVEMENT	GM	1		$0.00
713103103	PERMANENT TAPE, WHITE, SOLID DROP LANE MARKING, 12" FOR CONCRETE BRIDGES,	GM	1		$0.00
713103131	PERMANENT TAPE, WHITE, SKIP/DOTTED, 6" FOR CONCRETE SURFACES	GM	1		$0.00
713103133	PERMANENT TAPE, WHITE, SKIP, 12" WIDE 3'-9' DROP LANE ON CONCRETE SURFACES	GM	1		$0.00
713103201	PERMANENT TAPE, YELLOW, SOLID, 6" FOR CONCRETE BRIDGES	GM	1		$0.00
713103231	PERMANENT TAPE, YELLOW, 10-30 SKIP/ 3-9 DOTTED, 6" FOR CONCRETE SURFACES	GM	1		$0.00
713103331	PERMANENT TAPE, BLACK, SKIP/DOTTED, 6" FOR CONCRETE SURFACES	GM	1		$0.00
713103333	PERMANENT TAPE, BLACK, 3'-9' DROP LANE, 12" ON CONCRETE SURFACES	GM	1		$0.00
713107	PREFORMED/PERMANENT TAPE, REMOVE	SF	50		$0.00

400143	CLEANING & COATING CONCRETE SURFACE, CLASS 5	SF	5		$0.00
906-173-7	SINGLE COMPONENT POLYURETHANE INJECTION	GAL	500		$0.00
906-173-8	TWO COMPONENT POLYURETHANE INJECTION	LB	10000		$0.00
MISCELLANEOUS LABOR, EQUIPMENT, MATERIAL, AND SUB-CONTRACTOR ITEMS					
	LABOR - FOREMAN	HR	1		$0.00
	LABOR - OPERATOR	HR	1		$0.00
	LABOR - TRUCK DRIVER	HR	1		$0.00
	LABOR - PIPE LAYERS (FOR PIPES < 48" DIA.)	HR	1		$0.00
	LABOR - LABORER	HR	1		$0.00
	EQUIPMENT - FOREMAN P/U WITH HAND TOOLS	HR	1		$0.00
	EQUIPMENT - JOB TRUCK WITH MANDATORY TOOLS*	HR	1		$0.00
	EQUIPMENT - CRANE (20 TON)	HR	1		$0.00
	EQUIPMENT - CRANE (60 TON)	HR	1		$0.00
	EQUIPMENT - TRACTOR & TRAILER (TRANSPORT)	HR	1		$0.00
	EQUIPMENT - TRACK HOE (TO 100 HP)	HR	1		$0.00
	EQUIPMENT - TRACK HOE (101 HP TO 170 HP)	HR	1		$0.00
	EQUIPMENT - RUBBER TIRED BACKHOE	HR	1		$0.00
	EQUIPMENT - WHEEL LOADER (TO 150 HP)	HR	1		$0.00
	EQUIPMENT - WHEEL LOADER (151 HP AND UP)	HR	1		$0.00
	EQUIPMENT - TRACK TYPE TRACTORS (TO 100 HP)	HR	1		$0.00
	EQUIPMENT - TRACK TYPE TRACTORS (101 HP AND UP)	HR	1		$0.00
	EQUIPMENT - DUMP TRUCK (TANDEM AXLE)	HR	1		$0.00
	EQUIPMENT - PLATE TAMP	HR	1		$0.00
	EQUIPMENT - 3" TRASH PUMP	HR	1		$0.00
	EQUIPMENT - 4" DOUBLE DIAPHRAGM PUMP	HR	1		$0.00
	EQUIPMENT - AIR COMPRESSOR (125 SCFM)	HR	1		$0.00
	EQUIPMENT - WELL POINT PUMP	HR	1		$0.00
	EQUIPMENT - 4" JET PUMP	HR	1		$0.00
	MATERIAL - 2500 PSI CONCRETE (UN-FORMED)	CY	1		$0.00
	MATERIAL - OFF SITE SELECT FILL	CY	1		$0.00
	MATERIAL - LIMEROCK BASE MATERIAL	TN	1		$0.00
	MATERIAL - #57 WASHED STONE	TN	1		$0.00
	MATERIAL - ASPHALT PAVING (1.5" THICK; TYPE S-3)	SY	1		$0.00
	MATERIAL - BAHIA SOD	SY	1		$0.00
	SUB-CONTRACTOR - WELDER WITH TRUCK	HR	1		$0.00
	SUB-CONTRACTOR - TRACTOR WITH 7' BUSH HOG	HR	1		$0.00

* Contractor Job Truck Mandatory Tools

	Tool	Minimum size	Quantity
1	Air compressor	20 CFM @ 90PSI	1
2	3/4" drive ratchet and socket set		1
3	1 inch drive air impact wrench		1
4	1 inch drive sockets	1-1/2" to 3"	1 each
5	Slug wrenches	1-1/2" to 3"	1
6	End wrenches	7/16" to 1-1/2"	2 each
7	Porta band saw w spare blades	4" opening	1
8	Sawzall w spare blades		1
9	Nylon slings 5,000 and 10,000 pound rated (vertical)	2" 2 ply/4" 2 ply	2 each
10	Grade 80 Chain 10,000 pound rated	1/2" X 10 ft	2
11	Clevis or Shackles 5 ton rated	5/8" alloy	4
12	Porta power 10 ton		1
13	Shovels- round and square point		3 each
14	Cutting torch set *see note*		1
15	Gas or diesel stick welder and accessories *see note*		1
16	Small diaphragm pump and accessories	2" suction	1
17	Tap and die set	1/2" to 2" NPT	1
18	Drill and bits for steel or ductile	1/2" to 2" NPT size	1 set
19	Pry bar	5 foot	1
20	Come along	2ton	2
21	Circular Saw and blades for cribbing/forms	7 1/2 inch	2
22	Generator 120/240 volt	3500 watt	1
23	Framing hammer and nails for forms		2
24	Screw gun and screws for forms and cribbing		1
25	Gas powered cutoff saw (K-12)	12inch	1
26	Chain saw for cribbing and for'ms	14 inch bar	1
27	Sledge hammers	4t/ and 6tl	1 each
28	Crew PPE to include Hard hat and gloves at minimum	as needed	per person

155 Corey Avenue
St. Pete Beach, FL 33706-1839
www.stpetebeach.org

ADDENDUM 1

Civil On Call Construction Services

Issued 3/23/2026

*Sealed bids must be received by **9:00 AM on 04/08/2026** electronically via Bonfire. Bids received after the deadline will not be accepted. They will be publicly opened and read at **11:00 AM on 04/08/2026**. All bidders are invited to attend this bid Opening.*

Addendum 1 includes:

Pre-bid Minutes
Questions and Answers

Optional - Pre-Bid Meeting Minutes
RFP: Civil On Call Construction Services
March 18, 2026
10:00 AM

Staff Members Present:
Sara Spain, Procurement Manager
John Taylor, Assistant Finance Director
Camden Mills, Public Services Director
Dejan Milosevic, Project Manager
Michael Weaver, Infrastructure Operations Manager
Brian Gelock, Public Services
Kenneth Kosbab, Public Services
Ariana Wilson-Romo, Exec. Assistant City Clerk's Office

Others Present:

Name	***Company***	***Contact***
Abbey Boyle	PCS Civil	abbeyb@pcscivilinc.com
Bruno Sequeira	BCS Construction Group	Did not provide.
George Pappas	Southern Road & Bridge LLC	gpappas@southernrb.com
Tristan Hine	PCS Civil	tristanh@pcscivilinc.com
Dave Reid	Ajax Paving Industries of FL LLC	flestimate@ajaxpaving.com
Zachariah Wachalec	David Nelson Construction Co.	zwachalec@nelson-consturction.com

The meeting was called to order at 10:02 AM.

All attendees were present via Teams.

Ms. Spain briefly reviewed important dates and times which are as follows:
- Receipt of questions due 3/25 at 10AM
- Bids due 4/8 by 9AM
- Bid opening 4/8 at 11AM

She requested that any questions be submitted in writing to purchasing@stpetebeach.org. Questions will be answered via an addendum that will be posted to the City website and Bonfire.

Public Services Director Camden Mills stated that the City is seeking as-needed construction services for various capital projects and/or maintenance projects. Ms. Spain clarified that the City does anticipate awarding multiple vendors.

The following questions were asked:
Q: Contract terms? A: 3yr with options for two one-year renewals.
Q: Size project monetary-wise? A: The scope touches on what the dollar amounts would be. This contract would be used for anything under $4M. An addendum with anticipated projects can be posted.

There were questions regarding how contractors are selected if unit line items were being submitted in advance. Mr. Mills and Ms. Spain will clarify the contract language via an addendum. Ms. Spain added that in the general contract terms, it states that submissions will be evaluated on capability, cost, and capacity to perform the specific line items requested.
There being no additional questions, the meeting was adjourned at 10:16 AM.

Questions and Answers:

1. **Are there any plans available for the potential work needed? Or would you like us to provide the price for each line item on the bid form? – Plans are not yet available for the potential work needed. Please provide the unit price for each line item on the bid form that you're capable of performing or subcontracting.**
2. **On the bid form for the On-Call Civil Construction Services list, pay items 285701 through 285715, Optional Base Group 1 through Optional Base Group 15, are listed, but it does not specify which base option will be required. What base options are needed for each base group? – Base Groups 1-11: Graded aggregate based or crushed concrete, consisting of granitic material (minimum LBR 100). Base groups 12-15: Type B-12.5.**
3. **Prebid question: Contract Terms? 3 year with options for 2 one-year renewals.**
4. **Prebid question: Size project monetary-wise? The scope touches on what the dollar amounts would be. This contract would be used for anything under $4M.**
5. **Prebid question: List of anticipated projects. See list below of anticipated projects. This list is not all inclusive of potential projects, other projects may be assigned as needed.**
    - **Citywide stormwater collection system repairs and replacements (estimated > $1,000,000)**
    - **Citywide traffic signage replacements (estimated <$250,000)**
    - **Citywide pavement markings (estimated <$250,000)**
    - **Public Services operations yard expansion (estimated >$250,000 and <$500,000)**
    - **Coquina Way cul-de-sac improvements (<$250,000)**
    - **Fisherman's park hurricane damage rehabilitation (estimated >$250,000 and <$500,000)**
    - **Sunset park hurricane damage rehabilitation (estimated >$250,000 and <$500,000)**
    - **Gulf Way roadway rehabilitation (estimated > $2,000,000)**
    - **Belle Vista mini park improvements (estimated <$250,000)**
    - **1st Ave fishing pier hurricane damage repair (estimated <$250,000)**
    - **7th Ave fishing dock hurricane damage repair (estimated <$250,000)**
6. **Prebid question: There were questions regarding how contractors are selected if unit line items were being submitted in advance. Ms. Spain added that in the general contract terms, it states that submissions will be evaluated on capability, cost, and capacity to perform the specific line items requested. – Refer to II. Statement of Work, Part I: General Requirements, G. Work Assignments.**
7. **Will we split up projects (e.g. Seawalls and Parks)? – Multiple vendors may be selected per project depending on scope of work and vendors capabilities. Vendors are encouraged to submit unit prices for line items that they can perform or subcontract.**

155 Corey Avenue
St. Pete Beach, FL 33706-1839
www.stpetebeach.org

ADDENDUM 2

Civil On Call Construction Services

Issued 3/27/2026

*Sealed bids must be received by **9:00 AM on 04/08/2026** electronically via Bonfire. Bids received after the deadline will not be accepted. They will be publicly opened and read at **11:00 AM on 04/08/2026**. All bidders are invited to attend this bid Opening.*

Addendum 1 includes:

Questions and Answers

Questions and Answers:

1. **What class should the Round and Other-Elip/Arch pipe culvert be, class 3 or 4?** **The Round and Other-Elip/Arch pipe culvert bid items are listed as optional material pipe culverts and are not intended to specify a particular pipe class (e.g., Class III or Class IV) at the bid stage. The required pipe material and structural class, if applicable, will be determined by the City for each specific task order based on the project design, loading conditions, and applicable Florida Department of Transportation Standard Specifications.**

2. **Do the U-End walls need to be precast or cast in place?** **U-end walls may be precast or cast-in-place, as appropriate for the specific task order. The required type will be identified in the plans or directed by the City/Engineer for each assignment.**

3. **Are any inlets planned to be cast in place?** **Inlets may be precast or cast-in-place depending on site conditions and design requirements. This will be defined on a task order basis.**

4. **Will any of the end walls listed on the bid form have runs of pipe passing through them? If so, how many runs and at what skew?** **Some end walls may include pipe penetrations; however, the number of runs, pipe sizes, and skew angles (if any) will be determined by the design for each individual task order and shown in the applicable plans.**

5. **Please clarify how contract work will be assigned. The Statement of Work, Part I, Section 1, item G (Work Assignments) states that the City will obtain quotes from the Contractors who have a multiple-award contract. The City will already have contract pricing for each Contractor in the multiple-award contract, what is the criteria for these quotes?** **In the general contract terms, it states that submissions will be evaluated on capability, cost, and capacity to perform the specific line items requested.**

6. **Statement of Work, Part I, Section 15 states that Contractors must provide references for 5 work types in item E. If the Contractor does not intend to submit pricing for a work type, must that work type still be included in the project references?** **No, bidders shall provide references for applicable work types.**

7. **Please clarify the Period of Performance in the General Contract Terms. This states base scope target completion of January 2027 while other parts of the RFP specify a three year contract.** **3-year contract with 2 options for 1-year extensions. Ongoing work may be required.**

8. **Will any bonding be required?** **Yes, 5% of total bid amount.**

EXHIBIT "C"

Vendor Bid/Proposal

(Place Vendor's Bid/Proposal Behind this Page)

VI. CONTRACTOR'S PROPOSAL SUBMITTAL

The company that is submitting a proposal declares that it has extensive experience providing Task Work Order driven Civil On-Call Construction Services.

The undersigned, as Proposer, hereby declares that the only person or persons interested in the Proposal as principal or principals are named herein, and that no person other than herein mentioned has any interest in the Proposal or in the Agreement to be entered into; that this Proposal or Agreement is made without connection with any other person, company, or parties making a Proposal; and that it is in all respects fair and in good faith without collusion or fraud.

The Proposer further declares that they have examined the site of the work and informed themselves fully in regard to all conditions pertaining to the place where the work is to be done; that they have examined the Plans and Specifications for the work and Contract Documents relative thereto, and have read all special provisions furnished prior to the opening of proposals; and that they have satisfied themselves relative to the materials to be supplied and work to be performed.

The Proposer proposes and agrees, if the Proposal is accepted, to contract with the City of St. Pete Beach, Florida, in the form of an Agreement specified for **"Civil On Call Construction Services"** in St. Pete Beach, Florida, in full and complete accordance with the shown, noted, described, and reasonably intended requirements of the Plans, Specifications, and Contract Documents, to the full and entire satisfaction of the City of St. Pete Beach, Florida.

The successful Proposer shall be required to utilize the template Agreement in this Request for Proposals (RFP) and any questions regarding the Agreement must be addressed during the RFP process before submittal. The City reserves the right to respond or not respond to questions in the form of an addendum.

The Proposer proposes to furnish all materials, equipment, labor, and perform the work submitted in their proposal schedule for the City of St. Pete Beach **"Civil On Call Construction Services."**

COMPANY: Southern Road & Bridge, LLC

DATE: April 7th, 2026

ADDRESS: 2997 US-19 ALT STE B, Palm Harbor, FL, 34683

PHONE: 727-940-5395

PROPOSER: _____

NAME: Lucas L. Pappas, Managing Member

(SIGNATURE)

(PRINT NAME & TITLE)

STATE OF FLORIDA
COUNTY OF Pinellas

The foregoing instrument was sworn to (or affirmed), subscribed, and acknowledged before me by means of ☒ physical presence or ☐ online notarization, this 7th day of April, 2026, by Lucas L. Pappas, who is personally known to me or has produced N/A as identification.

(SEAL)

KARLI BEGLAN
Notary Public-State of Florida
Commission # HH 311614
My Commission Expires
December 02, 2026

_____
Notary Public – State of Florida

Karli Beglan
(Print, Type, Stamp, or Commissioned Name of Notary Public)

SUBMIT PROPOSAL TO: Electronically via Bonfire only

VII. PUBLIC ENTITY CRIMINAL AFFIDAVIT

SWORN STATEMENT – PUBLIC ENTITY CRIMES

PURSUANT TO § 287.133 (3)(a), FLORIDA STATUTES, ON PUBLIC ENTITY CRIMES
THE FORM MUST BE SIGNED AND SWORN TO IN THE PRESENCE OF A NOTARY PUBLIC OR OTHER OFFICIAL AUTHORIZED TO ADMINISTER OATHS.

1. This sworn statement is submitted to: City of St. Pete Beach
by: Lucas L. Pappas, Managing Member
(Print individual's name and title)

for: Southern Road & Bridge, LLC
(Print name of entity submitting sworn statement)

at: 2997 US-19 ALT STE B, Palm Harbor, FL, 34683
(Business address)

and (if applicable), its Federal Employer Identification Number (FEIN):

46-1187423
(FEIN)
or, if the entity has no FEIN, include the Social Security Number:

N/A
(SSN)

by the individual signing this sworn statement:
(Signature) Lucas L. Pappas, Managing Member

2. I understand that a "public entity crime" as defined in § 287.133 (1)(g), Fla. Stat., means a violation of any State or Federal law by a person with respect to and directly related to the transaction of business with any public entity or with an agency or political subdivision of any other state or of the United States including, but not limited to, any proposal or contract for goods or services, any lease for real property, or any contract for the construction or repair of a public building or public work, involving antitrust, fraud, theft, bribery, collusion, racketeering, conspiracy, or material misrepresentation.

3. I understand that "convicted" or "conviction" as defined in § 287.133 (1)(b), Fla. Stat., means a finding of guilt or a conviction of public entity crime with or without an adjudication of guilt in any Federal or State trial court of record relating to charges brought by indictment or information after July 1, 1989, as a result of a jury verdict, non-jury trial, or entry of a plea of guilty or nolo contendere.

4. I understand that an "affiliate" as defined in § 287.133 (1)(a), Fla. Stat., means:
   a. A predecessor or successor of a person convicted of a public entity crime or
   b. An entity under the control of any natural person who is active in the management of the entity and who has been convicted of a public entity crime. The term "affiliate" includes those officers, directors, executives, partners, shareholders, employees, members, and agents who are active in the management of an affiliate. The ownership by one (1) person of shares constituting a controlling interest in another person or a pooling of equipment or income among persons when not for fair market value under the arm's length agreement, shall be a prima facie case that one (1) person controls another person. A person who knowingly enters into a joint venture with a person who has been convicted of a public crime in Florida during the preceding thirty-six (36) months shall be considered an affiliate.

5. I understand that a "person" as defined in Section 287.133 (1)(e), Fla. Stat., means any natural person or any entity organized under the laws of any state or of the United States with the legal power to enter into a binding contract and which proposals or applies to proposal on contracts let by a public entity, or which otherwise transacts or applies to transact business with a public entity. The term "person" includes those officers, directors, executives, partners, shareholders, employees, members, and agents who are active in management of an entity.

6. Based on information and belief, the **statement which I have marked below is true** in relation to the entity submitting this sworn statement (indicate which statement applies).

☒ Neither the entity submitting this sworn statement, nor any of its officers, directors, executives, partners, shareholders, employees, members, or agents who are active in the management of the entity nor any affiliate of the entity has been charged with and convicted of a public entity crime subsequent to July 1, 1989.

☐The entity submitting this sworn statement or one (1) or more of its officers, directors, executives, partners, shareholders, employees, members, or agents who are active in the management of the entity or an affiliate of the entity has been charged with and convicted of a public entity crime subsequent to July 1, 1989.

☐The entity submitting this sworn statement or one (1) or more of its officers, directors, executives, partners, shareholders, employees, members, or agents who are active in the management of the entity or an affiliate of the entity has been charged with and convicted of a public entity crime subsequent to July 1, 1989. However, there has been a subsequent proceeding before a Hearing Office of the State of Florida, Division of Administrative Hearings and the Final Order entered by the Hearing Officer determined that it was not in the public interest to place the entity submitting this sworn statement on the convicted vendor list (attach a copy of the final order).

I UNDERSTAND THAT THE SUBMISSION OF THIS FORM TO THE CONTRACTING OFFICE FOR THE PUBLIC ENTITY IDENTIFIED IN PARAGRAPH 1 ABOVE IS FOR THE PUBLIC ENTITY ONLY AND THAT THIS FORM IS VALID THROUGH DECEMBER 31 OF THE CALENDAR YEAR IN WHICH IT IS FILED. I ALSO UNDERSTAND THAT I AM REQUIRED TO INFORM THE PUBLIC ENTITY PRIOR TO ENTERING INTO A CONTRACT IN EXCESS OF THE THRESHOLD AMOUNT PROVIDED IN SECTION 287.017, FLORIDA STATUTES, FOR CATEGORY TWO OF ANY CHANGE IN THE INFORMATION CONTAINED IN THIS FORM.

STATE OF FLORIDA
COUNTY OF Pinellas

The foregoing instrument was sworn to (or affirmed), subscribed, and acknowledged before me by means of ☒ physical presence or ☐ online notarization, this 7th day of April, 2026, by Lucas L. Pappas, who is personally known to me or has produced N/A as identification.

(SEAL)

KARLI BEGLAN
Notary Public-State of Florida
Commission # HH 311614
My Commission Expires
December 02, 2026

Notary Public – State of Florida

Karli Beglan
(Print, Type, Stamp, or Commissioned Name of Notary Public)

VIII. NON-COLLUSION AFFADAVIT

STATE OF Florida COUNTY OF Pinellas

I state that I Lucas L. Pappas, Managing Member of Southern Road & Bridge, LLC,
(Name and Title) (Name of Firm)

I am authorized to make this affidavit on behalf of my firm and its owner, directors and officers. I am the person responsible in my firm for the price(s) and amount(s) of this Response, and the preparation of the Response. I state that:

1. The price(s) and amount(s) of this Response have been arrived at independently and without consultation, communication or agreement with any other Provider, potential provider, Proposal, or potential Proposal.

2. Neither the price(s) nor the amount(s) of this Response, and neither the approximate price(s) nor approximate amount(s) of this Response, have been disclosed to any other firm or person who is a Provider, potential Provider, Proposal, or potential Proposal, and they will not be disclosed before Proposal opening.

3. No attempt has been made or will be made to induce any firm or persons to refrain from submitting a Response for this contract, or to submit a price(s) higher that the prices in this Response, or to submit any intentionally high or noncompetitive price(s) or other form of complementary Response.

4. The Response of my firm is made in good faith and not pursuant to any agreement or discussion with, or inducement from, any firm or person to submit a complementary or other noncompetitive Response.

5. Southern Road & Bridge, LLC, its affiliates, subsidiaries, officers, director, and employees (Name of Firm) are not currently under investigation, by any governmental agency and have not in the last three years been convicted or found liable for any act prohibited by State or Federal law in any jurisdiction, involving conspiracy or collusion with respect to Proposal, on any public contract, except as follows:

I state that I and the named firm understand and acknowledge that the above representations are material and important, and will be relied on by the State of Florida for which this Response is submitted. I understand and my firm understands that any misstatement in this affidavit is, and shall be treated as, fraudulent concealment from the State of Florida of the true facts relating to the submission of responses for this contract.

Name of Organization: Southern Road & Bridge, LLC Signed By: _____

Print Name: Lucas L. Pappas, Managing Member

The foregoing instrument was sworn to (or affirmed), subscribed, and acknowledged before me by means of ☒ physical presence or ☐ online notarization, this 7th day of April, 2026, by Lucas L. Pappas, who is personally known to me or has produced N/A as identification.

(SEAL)

KARLI BEGLAN
Notary Public-State of Florida
Commission # HH 311614
My Commission Expires
December 02, 2026

_____
Notary Public – State of Florida

Karli Beglan
(Print, Type, Stamp, or Commissioned Name of Notary Public)

155 Corey Avenue
St. Pete Beach, FL 33706-1839
www.stpetebeach.org

ADDENDUM 1

Civil On Call Construction Services

Issued 3/23/2026

*Sealed bids must be received by **9:00 AM on 04/08/2026** electronically via Bonfire. Bids received after the deadline will not be accepted. They will be publicly opened and read at **11:00 AM on 04/08/2026**. All bidders are invited to attend this bid Opening.*

Addendum 1 includes:

Pre-bid Minutes
Questions and Answers

Optional - Pre-Bid Meeting Minutes
RFP: Civil On Call Construction Services
March 18, 2026
10:00 AM

Staff Members Present:
Sara Spain, Procurement Manager
John Taylor, Assistant Finance Director
Camden Mills, Public Services Director
Dejan Milosevic, Project Manager
Michael Weaver, Infrastructure Operations Manager
Brian Gelock, Public Services
Kenneth Kosbab, Public Services
Ariana Wilson-Romo, Exec. Assistant City Clerk's Office

Others Present:

Name	***Company***	***Contact***
Abbey Boyle	PCS Civil	abbeyb@pcscivilinc.com
Bruno Sequeira	BCS Construction Group	Did not provide.
George Pappas	Southern Road & Bridge LLC	gpappas@southernrb.com
Tristan Hine	PCS Civil	tristanh@pcscivilinc.com
Dave Reid	Ajax Paving Industries of FL LLC	flestimate@ajaxpaving.com
Zachariah Wachalec	David Nelson Construction Co.	zwachalec@nelson-consturction.com

The meeting was called to order at 10:02 AM.

All attendees were present via Teams.

Ms. Spain briefly reviewed important dates and times which are as follows:
- Receipt of questions due 3/25 at 10AM
- Bids due 4/8 by 9AM
- Bid opening 4/8 at 11AM

She requested that any questions be submitted in writing to purchasing@stpetebeach.org. Questions will be answered via an addendum that will be posted to the City website and Bonfire.

Public Services Director Camden Mills stated that the City is seeking as-needed construction services for various capital projects and/or maintenance projects. Ms. Spain clarified that the City does anticipate awarding multiple vendors.

The following questions were asked:
Q: Contract terms? A: 3yr with options for two one-year renewals.
Q: Size project monetary-wise? A: The scope touches on what the dollar amounts would be. This contract would be used for anything under $4M. An addendum with anticipated projects can be posted.

There were questions regarding how contractors are selected if unit line items were being submitted in advance. Mr. Mills and Ms. Spain will clarify the contract language via an addendum. Ms. Spain added that in the general contract terms, it states that submissions will be evaluated on capability, cost, and capacity to perform the specific line items requested.
There being no additional questions, the meeting was adjourned at 10:16 AM.

Questions and Answers:

1. **Are there any plans available for the potential work needed? Or would you like us to provide the price for each line item on the bid form? – Plans are not yet available for the potential work needed. Please provide the unit price for each line item on the bid form that you're capable of performing or subcontracting.**
2. **On the bid form for the On-Call Civil Construction Services list, pay items 285701 through 285715, Optional Base Group 1 through Optional Base Group 15, are listed, but it does not specify which base option will be required. What base options are needed for each base group? – Base Groups 1-11: Graded aggregate based or crushed concrete, consisting of granitic material (minimum LBR 100). Base groups 12-15: Type B-12.5.**
3. **Prebid question: Contract Terms? 3 year with options for 2 one-year renewals.**
4. **Prebid question: Size project monetary-wise? The scope touches on what the dollar amounts would be. This contract would be used for anything under $4M.**
5. **Prebid question: List of anticipated projects. See list below of anticipated projects. This list is not all inclusive of potential projects, other projects may be assigned as needed.**
    - **Citywide stormwater collection system repairs and replacements (estimated > $1,000,000)**
    - **Citywide traffic signage replacements (estimated <$250,000)**
    - **Citywide pavement markings (estimated <$250,000)**
    - **Public Services operations yard expansion (estimated >$250,000 and <$500,000)**
    - **Coquina Way cul-de-sac improvements (<$250,000)**
    - **Fisherman's park hurricane damage rehabilitation (estimated >$250,000 and <$500,000)**
    - **Sunset park hurricane damage rehabilitation (estimated >$250,000 and <$500,000)**
    - **Gulf Way roadway rehabilitation (estimated > $2,000,000)**
    - **Belle Vista mini park improvements (estimated <$250,000)**
    - **1st Ave fishing pier hurricane damage repair (estimated <$250,000)**
    - **7th Ave fishing dock hurricane damage repair (estimated <$250,000)**
6. **Prebid question: There were questions regarding how contractors are selected if unit line items were being submitted in advance. Ms. Spain added that in the general contract terms, it states that submissions will be evaluated on capability, cost, and capacity to perform the specific line items requested. – Refer to II. Statement of Work, Part I: General Requirements, G. Work Assignments.**
7. **Will we split up projects (e.g. Seawalls and Parks)? – Multiple vendors may be selected per project depending on scope of work and vendors capabilities. Vendors are encouraged to submit unit prices for line items that they can perform or subcontract.**

155 Corey Avenue
St. Pete Beach, FL 33706-1839
www.stpetebeach.org

ADDENDUM 2

Civil On Call Construction Services

Issued 3/27/2026

*Sealed bids must be received by **9:00 AM on 04/08/2026** electronically via Bonfire. Bids received after the deadline will not be accepted. They will be publicly opened and read at **11:00 AM on 04/08/2026**. All bidders are invited to attend this bid Opening.*

Addendum 1 includes:

Questions and Answers

Questions and Answers:

1. **What class should the Round and Other-Elip/Arch pipe culvert be, class 3 or 4?** **The Round and Other-Elip/Arch pipe culvert bid items are listed as optional material pipe culverts and are not intended to specify a particular pipe class (e.g., Class III or Class IV) at the bid stage. The required pipe material and structural class, if applicable, will be determined by the City for each specific task order based on the project design, loading conditions, and applicable Florida Department of Transportation Standard Specifications.**

2. **Do the U-End walls need to be precast or cast in place?** **U-end walls may be precast or cast-in-place, as appropriate for the specific task order. The required type will be identified in the plans or directed by the City/Engineer for each assignment.**

3. **Are any inlets planned to be cast in place?** **Inlets may be precast or cast-in-place depending on site conditions and design requirements. This will be defined on a task order basis.**

4. **Will any of the end walls listed on the bid form have runs of pipe passing through them? If so, how many runs and at what skew?** **Some end walls may include pipe penetrations; however, the number of runs, pipe sizes, and skew angles (if any) will be determined by the design for each individual task order and shown in the applicable plans.**

5. **Please clarify how contract work will be assigned. The Statement of Work, Part I, Section 1, item G (Work Assignments) states that the City will obtain quotes from the Contractors who have a multiple-award contract. The City will already have contract pricing for each Contractor in the multiple-award contract, what is the criteria for these quotes?** **In the general contract terms, it states that submissions will be evaluated on capability, cost, and capacity to perform the specific line items requested.**

6. **Statement of Work, Part I, Section 15 states that Contractors must provide references for 5 work types in item E. If the Contractor does not intend to submit pricing for a work type, must that work type still be included in the project references?** **No, bidders shall provide references for applicable work types.**

7. **Please clarify the Period of Performance in the General Contract Terms. This states base scope target completion of January 2027 while other parts of the RFP specify a three year contract.** **3-year contract with 2 options for 1-year extensions. Ongoing work may be required.**

8. **Will any bonding be required?** **Yes, 5% of total bid amount.**

SOUTHERN ROAD & BRIDGE

COMPLETED PROJECTS:

SRB Job No.	Project Name	Contract AMT	Category	Description	Location	Owner	Project Manager	Surety Company	Start Date	Finish Date	% Subcontracted
2124	25-015	$836,241.50	Hurricane Repair	Pasco 25-015 Hurricane Repair Channel excavation, milling asphalt pavement, Superpave asphaltic concrete	Pasco County, FL	City of St. Pete Brett Warner 727-363-9254 bwarner@stpetebeach.org	Dallas Fortner	Atlantic Specialty Insurance Co Kevin Miller 330-533-1195	1/15/2025	6/14/2025	0%
1724	23-033	$4,351,100.00	Drainage Maintenance	Pasco 23-033 Piggyback	Various Counties	FDOT Hector Rodriguez 786-562-9863 hrodriguez@HRODcei.com	Dallas Fortner	Atlantic Specialty Insurance Co Kevin Miller 330-533-1195	10/9/2024	11/30/2024	0%
1823	23-13957	$875,418.39	Bridge Repair/Rehab	Osceola County 23 - 13957 Old Tampa Hwy removal of existing concrete, channel excavation, bridge deck expansion joint, rehabilitation, cleaning & coating concrete surfaces.	Osceola County, FL	Osceola County Allen Gault (407) 460-9322 agault@consoreng.com	Dallas Fortner	Atlantic Specialty Insurance Co Kevin Miller 330-533-1195	4/15/2024	11/12/2024	0%
1923	23-13739	$1,350,887.89	Bridge Repair/Rehab	Osceola County 23 - 13739 Old Lake Wilson Rd Culverts, coating existing steel structure, flowable fill.	Osceola County, FL	Osceola County Allen Gault (407) 460-9322 agault@consoreng.com	Dallas Fortner	Atlantic Specialty Insurance Co Kevin Miller 330-533-1195	3/20/2024	10/15/2024	0%
0124	Emergency Sink Hole Repairs	$909,074.00	Sink Hole Repairs	5 - Pasco County Sink Hole repairs, sheet piling, guard rail, milling & asphalt, grouting	Pasco County, FL	Pasco County 7536 State St, 2nd Floor New Port Richey, FL Efrain Figueroa 727-834-3611 efigueroa@pascocountyfl.net	Dallas Fortner	Atlantic Specialty Insurance Co Kevin Miller 330-533-1195	1/20/2024	9/27/2024	0%
0523	Rehab of the 1st Ave. Fishing Pier	$314,800.00	Bridge Repair/Rehab	City of St. Pete Beach Rehabilitation of Fishing pier, Spall repairs, ped railing installation	St. Pete Beach	City of St. Pete Brett Warner 727-363-9254 bwarner@stpetebeach.org	George Pappas	Atlantic Specialty Insurance Co Kevin Miller 330-533-1195	9/23/2023	3/21/2024	0%
2219	Piggyback Contract to IFB-ML-19-001	$6,952,464.00	Site & Civil	On-Going As Needed Stormwater Culvert Replacement - Multi Year Award	Pasco County, FL	City of New Port Richey 6132 Pine Hill Rd., Port Richey, FL 34668 727-841-4536	Dallas Fortner	Fidelity & Deposit Co. of Maryland Alvin Miller 330-533-1195	9/1/2019	9/30/2022	0%
0319	Piggyback Contract to IFB-ML-19-001	$5,250,000.00	Site & Civil	On-Going As Needed Stormwater Culvert Replacement - Multi Year Award	Pasco County, FL	Pasco County 7536 State St, 2nd Floor New Port Richey, FL Efrain Figueroa 727-834-3611 efigueroa@pascocountyfl.net	Dallas Fortner	Fidelity & Deposit Co. of Maryland Alvin Miller 330-533-1195	9/1/2019	9/30/2022	0%
0319	IFM-ML-19-001	$865,345.47	Culvert Replacement	On-Going As Needed Stormwater Culver Replacement Pasco County, FL	Pasco County, FL	Pasco County 7536 State St, 2nd Floor New Port Richey, FL Efrain Figueroa 727-834-3611 efigueroa@pascocountyfl.net	Nathan Wilfong	Fidelity & Deposit Co. of Maryland Alvin Miller 330-533-1195	5/6/2019	9/30/2021	0%
0418	IFB-JV-18-058	$5,250,000.00	Site & Civil	Miscellaneous Major Drainage Maintenance	Pasco County, FL	Pasco County 7536 State St, 2nd Floor New Port Richey, FL Efrain Figueroa 727-834-3611 efigueroa@pascocountyfl.net	Dallas Fortner	Fidelity & Deposit Co. of Maryland Alvin Miller 330-533-1195	6/19/2018	6/18/2021	0%
2119	IFB-JV-18-058	$4,575,261.25	Drainage Maintenance	Piggyback Contract of Miscellaneous Major Drainage Maintenance Pasco County, FL	Pasco County, FL	City of New Port Richey 6132 Pine Hill Rd., Port Richey, FL 34668 727-841-4536	Dallas Fortner	Fidelity & Deposit Co. of Maryland Alvin Miller 330-533-1195	10/1/2019	6/17/2021	0%

NOT COMPLETED:

SRB Job No.	Project Name	Contract AMT	Category	Description	Location	Owner	Project Manager	Surety Company	Start Date	Finish Date	% Subcontracted
0424	24-0211-ITB	$19,674,762.75	Bridge, Culvert, Storm Repair and Maintenance	Bridge Structures-Fixed Concrete, Maintenance & Minor Repair Structures Pedestrian Bridges, Box Culverts, Storm Drains, Clearing & Grubbing, Landscape Maintenance.	Pinellas County, FL	Pinellas County 400 South Ft. Harrison, Sixth Floor, Clearwater, FL, 33756 Michelle Jurek (727) 464-3311	George Pappas	Atlantic Specialty Insurance Co Keith Miller 330-533-1195	Aug-24	Sep-27	0%
1025	E7U36-R0	$500,000.00	Civil Site	Stormwater pipe repairs and maintenance	Citrus, Hernando, and Pasco Counties, FL	FDOT - District 7 11201 N McKinley Dr., Tampa, FL, 33612 LaShonn Foster (813) 975-6092 lashonn.foster@dot.state.fl.us	George Pappas	Atlantic Specialty Insurance Co Keith Miller 330-533-1195	Jul-25	Aug-26	10%

Ron DeSantis, Governor

Melanie S. Griffin, Secretary

STATE OF FLORIDA
DEPARTMENT OF BUSINESS AND PROFESSIONAL REGULATION

CONSTRUCTION INDUSTRY LICENSING BOARD

THE GENERAL CONTRACTOR HEREIN IS CERTIFIED UNDER THE
PROVISIONS OF CHAPTER 489, FLORIDA STATUTES

PAPPAS, LUCAS LOUIS

SOUTHERN ROAD & BRIDGE LLC
715 WESLEY AVE
TARPON SPRING FL 34689

LICENSE NUMBER: CGC1521093

EXPIRATION DATE: AUGUST 31, 2026

Always verify licenses online at MyFloridaLicense.com

ISSUED: 07/18/2024

Do not alter this document in any form.

This is your license. It is unlawful for anyone other than the licensee to use this document.

Southern Road & Bridge, LLC

of

Palm Harbor, FL

has met or exceeded the requirements set forth in the ***AMPP QP Accreditation Program*** *for*

FIELD APPLICATION OF COATINGS
COMPLEX STRUCTURES
AMPP SSPC – QP1



Chief Product and Operations Officer, AMPP

March 31, 2026 – March 31, 2027
Validation Period

Owners are advised to contact qpinfo@ampp.org to verify authenticity of accreditation.
Corporate Headquarters: Houston – 15835 Park Ten Place, Houston, TX 77084
Pittsburgh – 800 Trumbull Drive, Pittsburgh, PA 15205

AMPP™

Southern Road & Bridge, LLC

of

Palm Harbor, FL

has met or exceeded the requirements set forth in the ***AMPP QP Accreditation Program*** *for*



INDUSTRIAL HAZARDOUS PAINT REMOVAL

SSPC – QP 2

CATEGORY "A"

Chief Product and Operations Officer, AMPP

March 31, 2026 – March 31, 2027

Validation Period

Owners are advised to contact qpinfo@ampp.org to verify authenticity of accreditation.
Corporate Headquarters: Houston – 15835 Park Ten Place, Houston, TX 77084
Pittsburgh – 800 Trumbull Drive, Pittsburgh, PA 15205

AMPP™

of

has met or exceeded the requirements set forth in the ***AMPP QP Accreditation Program*** *for*

THERMAL SPRAY METALLIZING
SSPC – QP 6 (Field)



Chief Product and Operations Officer, AMPP

March 31, 2026 – March 31, 2027

Validation Period

Owners are advised to contact qpinfo@ampp.org to verify authenticity of accreditation.
Corporate Headquarters: Houston – 15835 Park Ten Place, Houston, TX 77084
Pittsburgh – 800 Trumbull Drive, Pittsburgh, PA 15205

NIICAP™
NACE INTERNATIONAL INSTITUTE
CONTRACTOR ACCREDITATION PROGRAM

Accreditation No. 008
Initial Accreditation Date
11 June 2018

This is to certify that

Southern Road & Bridge, LLC

has met the NIICAP Standards of Accreditation.

AS-1 Field

&

AS-2 Hazardous Waste Removal

Helena Seelinger
NACE International Institute Business Services Manager

Accreditation Valid Through
10 June 2020

SOUTHERN ROAD & BRIDGE
2997 Alt 19, Suite B • Palm Harbor, FL 34689
www.southernrb.com • Direct (727) 940-5395 • Fax (727) 499-7158

COMPANY INFORMATION:

Southern Road & Bridge, LLC (SRB) is a Florida Limited Liability Company and General Contractor established on October 15, 2012. We are headquartered in Palm Harbor, Florida with a primary focus on the transportation and infrastructure needs of state and municipal authorities. Southern Road & Bridge, LLC is a small business, we are also registered and current in SAM. Our strong focus on personal management, safety, and use of technology allow us to tackle projects that encompass several different trades. Our bonding capacity is $130 million per project with an aggregate of $200 million. SRB is SSPC QP-1 and SSPC QP-2 Certified. We pride ourselves on taking care of our environment for ourselves, our communities, and our children's futures by following the rules, regulations, and laws per state, county, city, as well as federally that require special permits, precautions, and trainings. We are extremely lucky to have had the pleasure of working with and/or for many wonderful agencies and companies. Each customer, Vendor, and Sub-Contractor is treated with respect and gratitude. Attached you will find letters of reference, our Certificate of Surety, similar projects completed with contact info, and licenses/certifications. Southern Road & Bridge, LLC specializes in the following:

- Sheet Pile Installation / Repair
- Structural Steel Repair
- Welding, Cutting and Straightening Beams
- Rigging & Containment
- Fender Repair/Replacement
- Rip Rap Installation/Repair
- Cathodic Protection
- Dam Repair
- Jacking for Bearing & Beam End Repairs
- Surface Preparation, Protective Coating Application and Removal
- Concrete Repair (Spalls, Partial, Full Depth Repair)
- Dewatering
- Caulking, Sealing & Waterproofing
- Pile Jacketing
- Joint Repair & Reconstruction
- Erosion Control
- Scour Protection
- Ground & Elevated Tank Rehabilitation
- Abrasive Blasting (Lead Abatement) **&** Industrial Coating of Steel Structures, Tanks, Dam Gates, Etc.
- Removal of Lead-Based Paint

LICENSES AND REGISTRATION:

FEIN # - 46-1187423 / Duns # - 078696169 / Cage Code – 6TP67 / NACIS Code – 237310
FL GC License – CGC1521093 / AL GC License – 49158 / CA License – 1129573 / LA GC License – 59114
MS GL License – 21994-MC / ND GC License – 52294 / NC GC License – 80181
OR License – 237610 / TN GC License – 00067390 / VA GC License - 2705174020
WV GC License – WV050586 / WA GC License – Reg#: CC SOUTHRB860RT, UBI#: 603-445-308

REASONS TO CHOOSE SOUTHERN ROAD & BRIDGE, LLC:

Experience
Quality
Flexibility
Value
Reliability
Safety
Commitment
Accelerated Commencement / Completion Time

QUALIFIED STATES:

Alabama	Arkansas	California	Colorado	Connecticut	Florida
Georgia	Illinois	Indiana	Iowa	Kansas	Kentucky
Louisiana	Maine	Maryland	Massachusetts	Michigan	Minnesota
Mississippi	Missouri	Nebraska	New Hampshire	New Jersey	New Mexico
New York	North Carolina	North Dakota	Ohio	Oklahoma	Oregon
Pennsylvania	Rhode Island	South Carolina	South Dakota	Tennessee	Texas
Vermont	Virginia	Washington	West Virginia	Wisconsin	

State of Florida

Department of State

I certify the attached is a true and correct copy of Articles of Organization, as amended to date, of SOUTHERN ROAD & BRIDGE, LLC, a limited liability company, organized under the laws of the State of Florida, as shown by the records of this office.

The document number of this company is L12000131263.

Given under my hand and the Great Seal of the State of Florida at Tallahassee, the Capital, this the Eleventh day of April, 2013

Ken Detzner
Secretary of State

CR2EO22 (1-11)

Electronic Articles of Organization For Florida Limited Liability Company

L12000131263
FILED 8:00 AM
October 15, 2012
Sec. Of State
nculligan

Article I

The name of the Limited Liability Company is:

SOUTHERN ROAD & BRIDGE, LLC

Article II

The street address of the principal office of the Limited Liability Company is:

731 WESLEY AVENUE
TARPON SPRINGS, FL. US 34689

The mailing address of the Limited Liability Company is:

731 WESLEY AVENUE
TARPON SPRINGS, FL. US 34689

Article III

The purpose for which this Limited Liability Company is organized is:

ANY AND ALL LAWFUL BUSINESS.

Article IV

The name and Florida street address of the registered agent is:

LUCAS L PAPPAS
731 WESLEY AVENUE
TARPON SPRINGS, FL. 34689

Having been named as registered agent and to accept service of process for the above stated limited liability company at the place designated in this certificate, I hereby accept the appointment as registered agent and agree to act in this capacity. I further agree to comply with the provisions of all statutes relating to the proper and complete performance of my duties, and I am familiar with and accept the obligations of my position as registered agent.

Registered Agent Signature: LUCAS L PAPPAS

L12000131263
FILED 8:00 AM
October 15, 2012
Sec. Of State
nculligan

Article V

The name and address of managing members/managers are:

Title: MGR
TITAN CONSTRUCTION MANAGEMENT LLC
821 VIRGINIA AVENUE
TARPON SPRINGS, FL. 34689 US

Title: MGR
PAPPAS CIVIL CONTRACTORS LLC
731 WESLEY AVENUE
TARPON SPRINGS, FL. 34689 US

Article VI

The effective date for this Limited Liability Company shall be:

10/15/2012

Signature of member or an authorized representative of a member

Electronic Signature: LUCAS L PAPPAS

I am the member or authorized representative submitting these Articles of Organization and affirm that the facts stated herein are true. I am aware that false information submitted in a document to the Department of State constitutes a third degree felony as provided for in s.817.155, F.S. I understand the requirement to file an annual report between January 1st and May 1st in the calendar year following formation of the LLC and every year thereafter to maintain "active" status.

SOUTHERN ROAD & BRIDGE

715 Wesley Avenue
Tarpon Springs, FL 34689
Tel: (727) 940-5395
Fax: (727) 499-7158
www.southernrb.com

WORK IN PROGRESS

PROJECT NAME	CONTRACT AMOUNT	PROJECT DESCRIPTION	PROJECT LOCATION	PRIME CONTRACTOR	OWNER CONTACT	BONDING/SURETY FIRM & CONTACT	START DATE	EST COMPLETION DATE	% SUBCONTRACTED OUT	PERCENTAGE COMPLETE
H.011487.6	$ 25,969,337.50	Berwick Bay Bridge Rehab	St Mary's Parish, LA	Southern Road & Bridge, LLC	LADOTD Corbett Hollier 504-376-0210 Corbett.Hollier@LA.GOV	Atlantic Specialty Insurance Co Kevin Miller 330-533-1195	1-Jan	1-Jan	20%	0%
	$ 239,000.00	Winamac Pedestrian Bridge Improvements	Winamac, IN	Southern Road & Bridge, LLC	Town of Winamac Paul Vincent 219-250-1250 paul@theameconsulting.com	Atlantic Specialty Insurance Co Kevin Miller 330-533-1195	1-Sep	1-Jan	0%	0%
E3U83	$ 2,363,975.80	East Pass Bridge Repairs	Okaloosa, FL	Southern Road & Bridge, LLC	FDOT Ron Bryson 850-768-1623 ron.bryson@searightgroup.com	Atlantic Specialty Insurance Co Kevin Miller 330-533-1195	1-Nov	1-Nov	20%	0%
PB 22-5	$ 2,232,358.10	James L. Turnage Blvd Bridge Repairs	Palm Beach County, FL	Southern Road & Bridge, LLC	Palm Beach International Airport George Santos 561-681-5121 gsantos@pbia.org	Nationwide Mutual Insurance Co Kevin Miller 330-533-1195	1-Nov	1-Nov	20%	0%
Project 18238 Contract 29219	$ 5,641,066.00	Hampton Boulevard Northbound Bridge Rehabilitation	Norfolk, VA	Southern Road & Bridge, LLC	City of Norfolk Josh Hill 757-271-1050 Jhill@moffattnichol.com	Nationwide Mutual Insurance Co Kevin Miller 330-533-1195	1-Sep	1-Oct	30%	10%
436436-1-52-13 / DOT-RFP-22-5007-LMBP	$ 3,735,000.00	Central Florida Rail Corridor (CFRC) Lake Monroe Drawbridge Painting	Volusia and Seminole counties, FL	Southern Road & Bridge, LLC	FDOT Marc Gregory 407-547-3032 mgregory@hntb.com	Nationwide Mutual Insurance Co Kevin Miller 330-533-1195	1-Oct	1-Oct	0%	0%
XX1775177	$ 6,131,670.00	High Friction Surface Treatment of Various Roadways	Statewide	Southern Road & Bridge, LLC	Maryland Department of Transportation Michael Little mlittle2@mdot.maryland.gov	Nationwide Mutual Insurance Co Kevin Miller 330-533-1195	1-Sep	1-Aug	30%	5%
H.014323.6	$ 1,792,800.00	Mississippi River Bridge Fender Repair (Pier 6) on Route I-10	East Baton Rouge Parish, LA	Southern Road & Bridge, LLC	LADOTD Alanna DiVittorio 225-925-7921 alanna.divittorio@la.gov	Nationwide Mutual Insurance Co Kevin Miller 330-533-1195	1-Sep	1-Feb	20%	5%
RH-21-066	$ 17,100,000.00	Stormwater Culvert Replacement	Pasco County, FL	Southern Road & Bridge, LLC	Pasco County Efrain Figueroa 727-834-3601 efigueroa@pascocountyfl.net	Nationwide Mutual Insurance Co Kevin Miller 330-533-1195	10-Feb	31-Dec	0%	10%
E4V29	$ 1,498,039.80	SR A1A/17th St. over Mercedes River	Fort Lauderdale, FL	Southern Road & Bridge	FDOT Tapesh Sookram 954-940-7619 Tapesh.sookram@dot.state.fl.us	Nationwide Mutual Insurance Co Kevin Miller 330-533-1195	15-Apr	15-Nov	10%	0%

State of Florida
Department of State

I certify from the records of this office that SOUTHERN ROAD & BRIDGE, LLC is a limited liability company organized under the laws of the State of Florida, filed on October 15, 2012, effective October 15, 2012.

The document number of this limited liability company is L12000131263.

I further certify that said limited liability company has paid all fees due this office through December 31, 2026, that its most recent annual report was filed on March 18, 2026, and that its status is active.

Given under my hand and the Great Seal of the State of Florida at Tallahassee, the Capital, this the Eighteenth day of March, 2026



Secretary of State

Tracking Number: 9921726049CC

To authenticate this certificate,visit the following site,enter this number, and then follow the instructions displayed.

https://services.sunbiz.org/Filings/CertificateOfStatus/CertificateAuthentication



Detail by Entity Name

Florida Limited Liability Company
SOUTHERN ROAD & BRIDGE, LLC

Filing Information

Document Number	L12000131263
FEI/EIN Number	46-1187423
Date Filed	10/15/2012
Effective Date	10/15/2012
State	FL
Status	ACTIVE
Last Event	LC AMENDMENT
Event Date Filed	12/19/2012
Event Effective Date	NONE

Principal Address

2997 ALT 19, SUITE B
PALM HARBOR, FL 34683

Changed: 09/17/2024

Mailing Address

2997 ALT 19, SUITE B
PALM HARBOR, FL 34683

Changed: 09/17/2024

Registered Agent Name & Address

PAPPAS, LUCAS
715 WESLEY AVENUE
TARPON SPRINGS, FL 34689

Name Changed: 02/01/2021

Address Changed: 02/01/2016

Authorized Person(s) Detail

Name & Address

Title MGR

PAPPAS CIVIL CONTRACTORS LLC
715 WESLEY AVENUE
TARPON SPRINGS, FL 34689

Title MGR

PAPPAS, LUCAS
715 WESLEY AVENUE
TARPON SPRINGS, FL 34689

Annual Reports

Report Year	Filed Date
2023	02/01/2023
2024	02/07/2024
2025	02/10/2025

Document Images

02/10/2025 -- ANNUAL REPORT	View image in PDF format
02/07/2024 -- ANNUAL REPORT	View image in PDF format
02/01/2023 -- ANNUAL REPORT	View image in PDF format
02/22/2022 -- ANNUAL REPORT	View image in PDF format
02/01/2021 -- ANNUAL REPORT	View image in PDF format
02/07/2020 -- ANNUAL REPORT	View image in PDF format
03/06/2019 -- ANNUAL REPORT	View image in PDF format
02/28/2018 -- ANNUAL REPORT	View image in PDF format
02/06/2017 -- ANNUAL REPORT	View image in PDF format
02/01/2016 -- ANNUAL REPORT	View image in PDF format
02/23/2015 -- ANNUAL REPORT	View image in PDF format
01/04/2014 -- ANNUAL REPORT	View image in PDF format
01/18/2013 -- ANNUAL REPORT	View image in PDF format
12/19/2012 -- LC Amendment	View image in PDF format
10/29/2012 -- LC Amendment	View image in PDF format
10/15/2012 -- Florida Limited Liability	View image in PDF format

L. Calvin Jones
Insurance & Surety Bonds

3744 Starrs Centre Drive • P.O. Box 159 • Canfield, Ohio 44406
PH: 330.533.1195 • FAX: 330.533.7583 • www.LCalvinJones.com

October 1, 2025

RE: Southern Road & Bridge, LLC

To Whom it May Concern:

Please be advised that Southern Road & Bridge, LLC. is a valued customer of our agency. We have established a bonding program for Southern Road & Bridge, LLC. in the amount of $50,000,000 single/$150,000,000 aggregate. The current surety is Atlantic Specialty Insurance Company a T-Listed, Best Rated Insurance Company.

Please note that the decision to issue performance and payment bonds is a matter between Southern Road & Bridge, LLC. and their surety company and will be subject to standard underwriting at the time of the final bond request, which will include but not be limited to the acceptability for the contract documents, bond forms, and financing. We assume no liability to third parties or to you if for any reason we do not execute these bonds.

Should you have any questions please contact me.

Best Regards,

Keith Miller
Attorney-In-Fact

intact INSURANCE

Power of Attorney

KNOW ALL MEN BY THESE PRESENTS, that ATLANTIC SPECIALTY INSURANCE COMPANY, a New York corporation with its principal office in Plymouth, Minnesota, does hereby constitute and appoint: **Brian M Battaglia, Christopher A. Howard, James Klingensmith, Keith A. Miller**, each individually if there be more than one named, its true and lawful Attorney-in-Fact, to make, execute, seal and deliver, for and on its behalf as surety, any and all bonds, recognizances, contracts of indemnity, and all other writings obligatory in the nature thereof; provided that no bond or undertaking executed under this authority shall exceed in amount the sum of: **unlimited** and the execution of such bonds, recognizances, contracts of indemnity, and all other writings obligatory in the nature thereof in pursuance of these presents, shall be as binding upon said Company as if they had been fully signed by an authorized officer of the Company and sealed with the Company seal. This Power of Attorney is made and executed by authority of the following resolutions adopted by the Board of Directors of ATLANTIC SPECIALTY INSURANCE COMPANY on the twenty-fifth day of September, 2012:

Resolved: That the President, any Senior Vice President or Vice-President (each an "Authorized Officer") may execute for and in behalf of the Company any and all bonds, recognizances, contracts of indemnity, and all other writings obligatory in the nature thereof, and affix the seal of the Company thereto; and that the Authorized Officer may appoint and authorize an Attorney-in-Fact to execute on behalf of the Company any and all such instruments and to affix the Company seal thereto; and that the Authorized Officer may at any time remove any such Attorney-in-Fact and revoke all power and authority given to any such Attorney-in-Fact.

Resolved: That the Attorney-in-Fact may be given full power and authority to execute for and in the name and on behalf of the Company any and all bonds, recognizances, contracts of indemnity, and all other writings obligatory in the nature thereof, and any such instrument executed by any such Attorney-in-Fact shall be as binding upon the Company as if signed and sealed by an Authorized Officer and, further, the Attorney-in-Fact is hereby authorized to verify any affidavit required to be attached to bonds, recognizances, contracts of indemnity, and all other writings obligatory in the nature thereof.

This power of attorney is signed and sealed by facsimile under the authority of the following Resolution adopted by the Board of Directors of ATLANTIC SPECIALTY INSURANCE COMPANY on the twenty-fifth day of September, 2012:

Resolved: That the signature of an Authorized Officer, the signature of the Secretary or the Assistant Secretary, and the Company seal may be affixed by facsimile to any power of attorney or to any certificate relating thereto appointing an Attorney-in-Fact for purposes only of executing and sealing any bond, undertaking, recognizance or other written obligation in the nature thereof, and any such signature and seal where so used, being hereby adopted by the Company as the original signature of such officer and the original seal of the Company, to be valid and binding upon the Company with the same force and effect as though manually affixed.

IN WITNESS WHEREOF, ATLANTIC SPECIALTY INSURANCE COMPANY has caused these presents to be signed by an Authorized Officer and the seal of the Company to be affixed this first day of January, 2023.

ATLANTIC SPECIALTY INSURANCE COMPANY CORPORATE SEAL 1986 NEW YORK

By _____
Sarah A. Kolar, Vice President and General Counsel

STATE OF MINNESOTA
HENNEPIN COUNTY

On this first day of January, 2023, before me personally came Sarah A. Kolar, Vice President and General Counsel of ATLANTIC SPECIALTY INSURANCE COMPANY, to me personally known to be the individual and officer described in and who executed the preceding instrument, and she acknowledged the execution of the same, and being by me duly sworn, that she is the said officer of the Company aforesaid, and that the seal affixed to the preceding instrument is the seal of said Company and that the said seal and the signature as such officer was duly affixed and subscribed to the said instrument by the authority and at the direction of the Company.

ALISON D. NASH-TROUT
NOTARY PUBLIC - MINNESOTA
My Commission Expires
January 31, 2030

_____
Notary Public

I, the undersigned, Secretary of ATLANTIC SPECIALTY INSURANCE COMPANY, a New York Corporation, do hereby certify that the foregoing power of attorney is in full force and has not been revoked, and the resolutions set forth above are now in force.

Signed and sealed. Dated 1st day of October 2025

ATLANTIC SPECIALTY INSURANCE COMPANY CORPORATE SEAL 1986 NEW YORK

_____
Kara L.B. Barrow, Secretary

This Power of Attorney expires
January 31, 2030

Please direct bond verifications to surety@intactinsurance.com



intact INSURANCE specialty solutions

Atlantic Specialty Insurance Company

Period Ended 12/31/2024

Dollars displayed in thousands

Admitted Assets	
Investments:	
Bonds	$ 2,894,094
Preferred Stocks	-
Common Stocks	987,702
Mortgage Loans	-
Real Estate	-
Contract Loans	-
Derivatives	-
Cash, Cash Equivalents & Short Term Investments	383,175
Other Investments	36,178
Total Cash & Investments	4,301,149
Premiums and Considerations Due	350,792
Reinsurance Recoverable	60,063
Receivable from Parent, Subsidiary or Affiliates	11,764
All Other Admitted Assets	94,008
Total Admitted Assets	4,817,776

Liabilities and Surplus	
Liabilities	
Loss Reserves	$ 1,264,802
Loss Adjustment Expense Reserves	423,323
Total Loss & LAE Reserves	1,688,125
Unearned Premium Reserve	811,551
Total Reinsurance Liabilities	64,571
Commissions, Other Expenses, and Taxes due	75,922
Derivatives	-
Payable to Parent, Subs or Affiliates	-
All Other Liabilities	1,121,125
Total Liabilities	3,761,294
Capital and Surplus	
Common Capital Stock	9,001
Preferred Capital Stock	-
Surplus Notes	-
Unassigned Surplus	476,697
Other Including Gross Contributed	570,784
Capital & Surplus	1,056,482
Total Liabilities and C&S	4,817,776

State of Minnesota
County of Hennepin

I, Kara Barrow, Secretary of Atlantic Specialty Insurance Company do hereby certify that the foregoing statement is a correct exhibit of the assets and liabilities of the said Company, on the 31st day of December, 2024, according to the best of my information, knowledge and belief.

Secretary

Subscribed and sworn to, before me, a Notary Public of the State of Minnesota on this 10th day of March, 2025.

Notary Public

KERRI RIECHERS
NOTARY PUBLIC
MINNESOTA
My Commission Expires Jan. 31, 2030

Valley

March 4, 2026

Southern Road & Bridge LLC

715 Wesley Ave

Tarpon Springs, FL 34689

To Whom it may concern:

This letter is to confirm that on 3/11/2025 Southern Road & Bridge LLC $5,000,000 line of credit had an outstanding balance of $0. The line is open and in good standing and currently has the full $5,000,000 available.

If you have any questions, please feel free to contact me.

Sincerely,

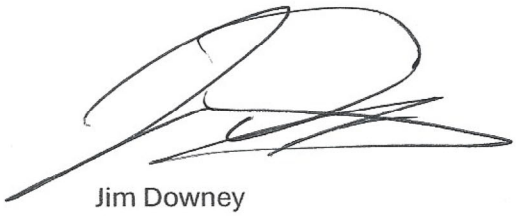

Jim Downey
First Vice President
Commercial Loans Relationship Manager III
Valley National Bank
710 E Tarpon Ave. Tarpon Springs, FL 34689
C: 727-580-1513
jdowney@valley.com

© 2019 Valley National Bank. Member FDIC. Equal Opportunity Lender. All Rights Reserved.

CERTIFICATE OF LIABILITY INSURANCE

DATE (MM/DD/YYYY): 4/29/2025

THIS CERTIFICATE IS ISSUED AS A MATTER OF INFORMATION ONLY AND CONFERS NO RIGHTS UPON THE CERTIFICATE HOLDER. THIS CERTIFICATE DOES NOT AFFIRMATIVELY OR NEGATIVELY AMEND, EXTEND OR ALTER THE COVERAGE AFFORDED BY THE POLICIES BELOW. THIS CERTIFICATE OF INSURANCE DOES NOT CONSTITUTE A CONTRACT BETWEEN THE ISSUING INSURER(S), AUTHORIZED REPRESENTATIVE OR PRODUCER, AND THE CERTIFICATE HOLDER.

IMPORTANT: If the certificate holder is an ADDITIONAL INSURED, the policy(ies) must have ADDITIONAL INSURED provisions or be endorsed. If SUBROGATION IS WAIVED, subject to the terms and conditions of the policy, certain policies may require an endorsement. A statement on this certificate does not confer rights to the certificate holder in lieu of such endorsement(s).

PRODUCER
Alliant Insurance Services, Inc.
1501 Reedsdale Street, Suite 3005
Pittsburgh PA 15233

License#: 0C36861
SOUTROA-01

CONTACT NAME: Construction Services Group
PHONE (A/C, No, Ext): (412) 863-4531 **FAX (A/C, No):**
E-MAIL ADDRESS: csgpghcertrequest@alliant.com

INSURER(S) AFFORDING COVERAGE	NAIC #
INSURER A : Zurich American Insurance Comp	16535
INSURER B : Allied World National Assuranc	10690
INSURER C :	
INSURER D :	
INSURER E :	
INSURER F :	

INSURED
Southern Road & Bridge, LLC
2997 Alt 19 Suite B
Palm Harbor FL 34683

COVERAGES **CERTIFICATE NUMBER:** 1796904771 **REVISION NUMBER:**

THIS IS TO CERTIFY THAT THE POLICIES OF INSURANCE LISTED BELOW HAVE BEEN ISSUED TO THE INSURED NAMED ABOVE FOR THE POLICY PERIOD INDICATED. NOTWITHSTANDING ANY REQUIREMENT, TERM OR CONDITION OF ANY CONTRACT OR OTHER DOCUMENT WITH RESPECT TO WHICH THIS CERTIFICATE MAY BE ISSUED OR MAY PERTAIN, THE INSURANCE AFFORDED BY THE POLICIES DESCRIBED HEREIN IS SUBJECT TO ALL THE TERMS, EXCLUSIONS AND CONDITIONS OF SUCH POLICIES. LIMITS SHOWN MAY HAVE BEEN REDUCED BY PAID CLAIMS.

INSR LTR	TYPE OF INSURANCE	ADDL INSD	SUBR WVD	POLICY NUMBER	POLICY EFF (MM/DD/YYYY)	POLICY EXP (MM/DD/YYYY)	LIMITS	
A	X **COMMERCIAL GENERAL LIABILITY** [ ] CLAIMS-MADE [X] OCCUR GEN'L AGGREGATE LIMIT APPLIES PER: [ ] POLICY [X] PRO-JECT [X] LOC [ ] OTHER:	Y	Y	GLO 2185745-03	5/1/2025	5/1/2026	EACH OCCURRENCE DAMAGE TO RENTED PREMISES (Ea occurrence) MED EXP (Any one person) PERSONAL & ADV INJURY GENERAL AGGREGATE PRODUCTS - COMP/OP AGG 	$ 2,000,000 $ 300,000 $ 10,000 $ 2,000,000 $ 4,000,000 $ 4,000,000 $
A	**AUTOMOBILE LIABILITY** X ANY AUTO [ ] OWNED AUTOS ONLY [ ] SCHEDULED AUTOS X HIRED AUTOS ONLY X NON-OWNED AUTOS ONLY	Y	Y	BAP 2185746-03	5/1/2025	5/1/2026	COMBINED SINGLE LIMIT (Ea accident) BODILY INJURY (Per person) BODILY INJURY (Per accident) PROPERTY DAMAGE (Per accident) 	$ 2,000,000 $ $ $ $
B	X **UMBRELLA LIAB** X OCCUR **EXCESS LIAB** [ ] CLAIMS-MADE [ ] DED X RETENTION $ 10,000			0311-1318	5/1/2025	5/1/2026	EACH OCCURRENCE AGGREGATE 	$ 3,000,000 $ 3,000,000 $
	WORKERS COMPENSATION AND EMPLOYERS' LIABILITY Y / N ANYPROPRIETOR/PARTNER/EXECUTIVE OFFICER/MEMBER EXCLUDED? [ ] **(Mandatory in NH)** If yes, describe under DESCRIPTION OF OPERATIONS below	N / A					[ ] PER STATUTE [ ] OTH-ER E.L. EACH ACCIDENT E.L. DISEASE - EA EMPLOYEE E.L. DISEASE - POLICY LIMIT	 $ $ $

DESCRIPTION OF OPERATIONS / LOCATIONS / VEHICLES (ACORD 101, Additional Remarks Schedule, may be attached if more space is required)
Blanket Additional Insured, Blanket Waiver of Subrogation apply to the General Liability and Automobile Liability policies, when required by a written contract.

CERTIFICATE HOLDER

For Bidding Purposes Only

CANCELLATION

SHOULD ANY OF THE ABOVE DESCRIBED POLICIES BE CANCELLED BEFORE THE EXPIRATION DATE THEREOF, NOTICE WILL BE DELIVERED IN ACCORDANCE WITH THE POLICY PROVISIONS.

AUTHORIZED REPRESENTATIVE

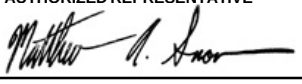

© 1988-2015 ACORD CORPORATION. All rights reserved.

CERTIFICATE OF LIABILITY INSURANCE

DATE (MM/DD/YYYY): 01/07/2026

THIS CERTIFICATE IS ISSUED AS A MATTER OF INFORMATION ONLY AND CONFERS NO RIGHTS UPON THE CERTIFICATE HOLDER. THIS CERTIFICATE DOES NOT AFFIRMATIVELY OR NEGATIVELY AMEND, EXTEND OR ALTER THE COVERAGE AFFORDED BY THE POLICIES BELOW. THIS CERTIFICATE OF INSURANCE DOES NOT CONSTITUTE A CONTRACT BETWEEN THE ISSUING INSURER(S), AUTHORIZED REPRESENTATIVE OR PRODUCER, AND THE CERTIFICATE HOLDER.

IMPORTANT: If the certificate holder is an ADDITIONAL INSURED, the policy(ies) must have ADDITIONAL INSURED provisions or be endorsed. If SUBROGATION IS WAIVED, subject to the terms and conditions of the policy, certain policies may require an endorsement. A statement on this certificate does not confer rights to the certificate holder in lieu of such endorsement(s).

PRODUCER

Moore Resources Insurance Agency
4563 Central Avenue
St. Petersburg, FL 33713

CONTACT NAME: Whitney Elwart
PHONE (A/C, No, Ext): 727-323-0206 FAX (A/C, No): 727-323-0603
E-MAIL ADDRESS: WhitneyE@dmins.com

INSURER(S) AFFORDING COVERAGE		NAIC #
INSURER A :	Nautilus Insurance Company	17370
INSURER B :	Signal Mutual Indemnity Association Ltd.	
INSURER C :		
INSURER D :		
INSURER E :		
INSURER F :		

INSURED

Southern Road & Bridge, LLC
2997 Alt 19 Suite B
Palm Harbor, FL 34683

COVERAGES **CERTIFICATE NUMBER: 80232834-0** **REVISION NUMBER: 153**

THIS IS TO CERTIFY THAT THE POLICIES OF INSURANCE LISTED BELOW HAVE BEEN ISSUED TO THE INSURED NAMED ABOVE FOR THE POLICY PERIOD INDICATED. NOTWITHSTANDING ANY REQUIREMENT, TERM OR CONDITION OF ANY CONTRACT OR OTHER DOCUMENT WITH RESPECT TO WHICH THIS CERTIFICATE MAY BE ISSUED OR MAY PERTAIN, THE INSURANCE AFFORDED BY THE POLICIES DESCRIBED HEREIN IS SUBJECT TO ALL THE TERMS, EXCLUSIONS AND CONDITIONS OF SUCH POLICIES. LIMITS SHOWN MAY HAVE BEEN REDUCED BY PAID CLAIMS.

INSR LTR	TYPE OF INSURANCE	ADDL INSD	SUBR WVD	POLICY NUMBER	POLICY EFF (MM/DD/YYYY)	POLICY EXP (MM/DD/YYYY)	LIMITS	
	COMMERCIAL GENERAL LIABILITY						EACH OCCURRENCE	$
	CLAIMS-MADE OCCUR						DAMAGE TO RENTED PREMISES (Ea occurrence)	$
							MED EXP (Any one person)	$
							PERSONAL & ADV INJURY	$
	GEN'L AGGREGATE LIMIT APPLIES PER:						GENERAL AGGREGATE	$
	POLICY PRO-JECT LOC						PRODUCTS - COMP/OP AGG	$
	OTHER:							$
	AUTOMOBILE LIABILITY						COMBINED SINGLE LIMIT (Ea accident)	$
	ANY AUTO						BODILY INJURY (Per person)	$
	OWNED AUTOS ONLY / SCHEDULED AUTOS						BODILY INJURY (Per accident)	$
	HIRED AUTOS ONLY / NON-OWNED AUTOS ONLY						PROPERTY DAMAGE (Per accident)	$
								$
	UMBRELLA LIAB OCCUR						EACH OCCURRENCE	$
	EXCESS LIAB CLAIMS-MADE						AGGREGATE	$
	DED RETENTION $							$
	WORKERS COMPENSATION AND EMPLOYERS' LIABILITY Y / N						PER STATUTE OTH-ER	
	ANY PROPRIETOR/PARTNER/EXECUTIVE OFFICER/MEMBER EXCLUDED? (Mandatory in NH)	N / A					E.L. EACH ACCIDENT	$
	If yes, describe under DESCRIPTION OF OPERATIONS below						E.L. DISEASE - EA EMPLOYEE	$
							E.L. DISEASE - POLICY LIMIT	$
A	Contractor Pollution			CPL2039265-12	01/01/2025	05/01/2026	Each Occurence	10,000,000
B	USL&H			N9-72000	01/01/2026	05/01/2026	Statutory Under Act	

DESCRIPTION OF OPERATIONS / LOCATIONS / VEHICLES (ACORD 101, Additional Remarks Schedule, may be attached if more space is required)

CERTIFICATE HOLDER

For Bidding Purposes

CANCELLATION

SHOULD ANY OF THE ABOVE DESCRIBED POLICIES BE CANCELLED BEFORE THE EXPIRATION DATE THEREOF, NOTICE WILL BE DELIVERED IN ACCORDANCE WITH THE POLICY PROVISIONS.

AUTHORIZED REPRESENTATIVE

(WME)

© 1988-2015 ACORD CORPORATION. All rights reserved.

CERTIFICATE OF LIABILITY INSURANCE

DATE (MM/DD/YYYY): 02/24/2026

THIS CERTIFICATE IS ISSUED AS A MATTER OF INFORMATION ONLY AND CONFERS NO RIGHTS UPON THE CERTIFICATE HOLDER. THIS CERTIFICATE DOES NOT AFFIRMATIVELY OR NEGATIVELY AMEND, EXTEND OR ALTER THE COVERAGE AFFORDED BY THE POLICIES BELOW. THIS CERTIFICATE OF INSURANCE DOES NOT CONSTITUTE A CONTRACT BETWEEN THE ISSUING INSURER(S), AUTHORIZED REPRESENTATIVE OR PRODUCER, AND THE CERTIFICATE HOLDER.

IMPORTANT: If the certificate holder is an ADDITIONAL INSURED, the policy(ies) must have ADDITIONAL INSURED provisions or be endorsed. If SUBROGATION IS WAIVED, subject to the terms and conditions of the policy, certain policies may require an endorsement. A statement on this certificate does not confer rights to the certificate holder in lieu of such endorsement(s).

PRODUCER	CONTACT NAME: Whitney Elwart	
Moore Resources Insurance Agency 4563 Central Avenue St. Petersburg, FL 33713	PHONE (A/C, No, Ext): 727-323-0206	FAX (A/C, No): 727-323-0603
	E-MAIL ADDRESS: WhitneyE@dmins.com	

INSURER(S) AFFORDING COVERAGE		NAIC #
INSURER A :	Nautilus Insurance Company	17370
INSURER B :	American Alternative Insurance Corporation	19720
INSURER C :		
INSURER D :		
INSURER E :		
INSURER F :		

INSURED
Southern Road & Bridge, LLC 2997 Alt 19 Suite B Palm Harbor, FL 34683

COVERAGES **CERTIFICATE NUMBER: 80232834-0** **REVISION NUMBER: 141**

THIS IS TO CERTIFY THAT THE POLICIES OF INSURANCE LISTED BELOW HAVE BEEN ISSUED TO THE INSURED NAMED ABOVE FOR THE POLICY PERIOD INDICATED. NOTWITHSTANDING ANY REQUIREMENT, TERM OR CONDITION OF ANY CONTRACT OR OTHER DOCUMENT WITH RESPECT TO WHICH THIS CERTIFICATE MAY BE ISSUED OR MAY PERTAIN, THE INSURANCE AFFORDED BY THE POLICIES DESCRIBED HEREIN IS SUBJECT TO ALL THE TERMS, EXCLUSIONS AND CONDITIONS OF SUCH POLICIES. LIMITS SHOWN MAY HAVE BEEN REDUCED BY PAID CLAIMS.

INSR LTR	TYPE OF INSURANCE	ADDL INSD	SUBR WVD	POLICY NUMBER	POLICY EFF (MM/DD/YYYY)	POLICY EXP (MM/DD/YYYY)	LIMITS	
	COMMERCIAL GENERAL LIABILITY						EACH OCCURRENCE	$
	CLAIMS-MADE OCCUR						DAMAGE TO RENTED PREMISES (Ea occurrence)	$
							MED EXP (Any one person)	$
							PERSONAL & ADV INJURY	$
	GEN'L AGGREGATE LIMIT APPLIES PER:						GENERAL AGGREGATE	$
	POLICY PRO-JECT LOC						PRODUCTS - COMP/OP AGG	$
	OTHER:							$
	AUTOMOBILE LIABILITY						COMBINED SINGLE LIMIT (Ea accident)	$
	ANY AUTO						BODILY INJURY (Per person)	$
	OWNED AUTOS ONLY / SCHEDULED AUTOS						BODILY INJURY (Per accident)	$
	HIRED AUTOS ONLY / NON-OWNED AUTOS ONLY						PROPERTY DAMAGE (Per accident)	$
								$
	UMBRELLA LIAB OCCUR						EACH OCCURRENCE	$
	EXCESS LIAB CLAIMS-MADE						AGGREGATE	$
	DED RETENTION $							$
	WORKERS COMPENSATION AND EMPLOYERS' LIABILITY ANY PROPRIETOR/PARTNER/EXECUTIVE OFFICER/MEMBER EXCLUDED? Y / N **(Mandatory in NH)** If yes, describe under DESCRIPTION OF OPERATIONS below	N / A					PER STATUTE OTH-ER	
							E.L. EACH ACCIDENT	$
							E.L. DISEASE - EA EMPLOYEE	$
							E.L. DISEASE - POLICY LIMIT	$
A	Contractor Pollution			CPL2039265-12	01/01/2025	05/01/2026	Each Occurrence	10,000,000
B	P&I Including Crew			OMS-25002190-01	01/01/2025	05/01/2026	Each Occurrence	$1,000,000

DESCRIPTION OF OPERATIONS / LOCATIONS / VEHICLES (ACORD 101, Additional Remarks Schedule, may be attached if more space is required)

Blanket Additional Insured with a Waiver of Subrogation with respects to Pollution, only if required by written contract and subject
to the terms, conditions and exclusions as specified in the policy.

CERTIFICATE HOLDER

For Bidding Purposes

CANCELLATION

SHOULD ANY OF THE ABOVE DESCRIBED POLICIES BE CANCELLED BEFORE THE EXPIRATION DATE THEREOF, NOTICE WILL BE DELIVERED IN ACCORDANCE WITH THE POLICY PROVISIONS.

AUTHORIZED REPRESENTATIVE

(WME)

© 1988-2015 ACORD CORPORATION. All rights reserved.

CERTIFICATE OF LIABILITY INSURANCE

DATE (MM/DD/YYYY): 12/12/2025

THIS CERTIFICATE IS ISSUED AS A MATTER OF INFORMATION ONLY AND CONFERS NO RIGHTS UPON THE CERTIFICATE HOLDER. THIS CERTIFICATE DOES NOT AFFIRMATIVELY OR NEGATIVELY AMEND, EXTEND OR ALTER THE COVERAGE AFFORDED BY THE POLICIES BELOW. THIS CERTIFICATE OF INSURANCE DOES NOT CONSTITUTE A CONTRACT BETWEEN THE ISSUING INSURER(S), AUTHORIZED REPRESENTATIVE OR PRODUCER, AND THE CERTIFICATE HOLDER.

IMPORTANT: If the certificate holder is an ADDITIONAL INSURED, the policy(ies) must have ADDITIONAL INSURED provisions or be endorsed. If SUBROGATION IS WAIVED, subject to the terms and conditions of the policy, certain policies may require an endorsement. A statement on this certificate does not confer rights to the certificate holder in lieu of such endorsement(s).

PRODUCER
SUNZ Insurance Solutions, LLC ID: (Vested)
c/o Vested HR Solutions, LLC
2965 Palm Harbor Blvd
Palm Harbor, FL 34683

CONTACT NAME: Lisa Sevastou
PHONE (A/C, No, Ext): 727-916-1149 **FAX (A/C, No):**
E-MAIL ADDRESS: certs@vestedhr.com

INSURER(S) AFFORDING COVERAGE	NAIC #
INSURER A : United Wisconsin Insurance Company	29157
INSURER B :	
INSURER C :	
INSURER D :	
INSURER E :	
INSURER F :	

INSURED
Vested HR Solutions, LLC
Co-Employer For: Southern Road & Bridge LLC
2965 Palm Harbor Blvd
Palm Harbor FL 34683

COVERAGES **CERTIFICATE NUMBER:** 88251354 **REVISION NUMBER:**

THIS IS TO CERTIFY THAT THE POLICIES OF INSURANCE LISTED BELOW HAVE BEEN ISSUED TO THE INSURED NAMED ABOVE FOR THE POLICY PERIOD INDICATED. NOTWITHSTANDING ANY REQUIREMENT, TERM OR CONDITION OF ANY CONTRACT OR OTHER DOCUMENT WITH RESPECT TO WHICH THIS CERTIFICATE MAY BE ISSUED OR MAY PERTAIN, THE INSURANCE AFFORDED BY THE POLICIES DESCRIBED HEREIN IS SUBJECT TO ALL THE TERMS, EXCLUSIONS AND CONDITIONS OF SUCH POLICIES. LIMITS SHOWN MAY HAVE BEEN REDUCED BY PAID CLAIMS.

INSR LTR	TYPE OF INSURANCE	ADDL INSD	SUBR WVD	POLICY NUMBER	POLICY EFF (MM/DD/YYYY)	POLICY EXP (MM/DD/YYYY)	LIMITS	
	COMMERCIAL GENERAL LIABILITY						EACH OCCURRENCE	$
	☐ CLAIMS-MADE ☐ OCCUR						DAMAGE TO RENTED PREMISES (Ea occurrence)	$
							MED EXP (Any one person)	$
							PERSONAL & ADV INJURY	$
	GEN'L AGGREGATE LIMIT APPLIES PER:						GENERAL AGGREGATE	$
	☐ POLICY ☐ PRO-JECT ☐ LOC						PRODUCTS - COMP/OP AGG	$
	OTHER:							$
	AUTOMOBILE LIABILITY						COMBINED SINGLE LIMIT (Ea accident)	$
	☐ ANY AUTO						BODILY INJURY (Per person)	$
	☐ OWNED AUTOS ONLY ☐ SCHEDULED AUTOS						BODILY INJURY (Per accident)	$
	☐ HIRED AUTOS ONLY ☐ NON-OWNED AUTOS ONLY						PROPERTY DAMAGE (Per accident)	$
								$
	☐ **UMBRELLA LIAB** ☐ OCCUR						EACH OCCURRENCE	$
	☐ **EXCESS LIAB** ☐ CLAIMS-MADE						AGGREGATE	$
	☐ DED ☐ RETENTION $							$
A	**WORKERS COMPENSATION AND EMPLOYERS' LIABILITY** Y / N	N / A		WC557-00001-026-SZ WC557-00001-025-SZ	1/1/2026 1/1/2025	1/1/2027 1/1/2026	✓ PER STATUTE ☐ OTH-ER	
	ANYPROPRIETOR/PARTNER/EXECUTIVE OFFICER/MEMBER EXCLUDED? N **(Mandatory in NH)**						E.L. EACH ACCIDENT	$ 1,000,000
	If yes, describe under DESCRIPTION OF OPERATIONS below						E.L. DISEASE - EA EMPLOYEE	$ 1,000,000
							E.L. DISEASE - POLICY LIMIT	$ 1,000,000

DESCRIPTION OF OPERATIONS / LOCATIONS / VEHICLES (ACORD 101, Additional Remarks Schedule, may be attached if more space is required)

Coverage provided for all leased employees but not subcontractors of: Southern Road & Bridge LLC Client Effective: 1/1/2020

CERTIFICATE HOLDER

Southern Road & Bridge, LLC
715 Wesley Avenue
Tarpon Springs FL 34689

CANCELLATION

SHOULD ANY OF THE ABOVE DESCRIBED POLICIES BE CANCELLED BEFORE THE EXPIRATION DATE THEREOF, NOTICE WILL BE DELIVERED IN ACCORDANCE WITH THE POLICY PROVISIONS.

AUTHORIZED REPRESENTATIVE
Rick Leonard

© 1988-2015 ACORD CORPORATION. All rights reserved.

Pinellas County

Public Works

8.5.2025

John Taylor
Project Coordinator
Pinellas County Public Works ▪ Transportation Division ▪ Roadway and Bridge Section
727-464-8824
jtaylor3@pinellas.gov

To Whom It May Concern:

I am pleased to write this letter of reference on behalf of **Southern Road and Bridge** who has provided reliable and high-quality bridge and box culvert repair and maintenance services for Pinellas County Public Works over the last 24 months.

During this tenure Southern Road and Bridge has consistently demonstrated professionalism, technical expertise, and a strong commitment to both safety and overall project quality. Their team has successfully completed a wide range of maintenance and repair projects of differing sizes and scopes. These projects have included:

- **Spall Repairs** on bridge decks, substructures, and box culverts to restore structure integrity and prolong life.
- **Crack Injection** using appropriate materials and methods to seal and stabilize concrete members.
- **Channel Excavation** to restore and enhance drainage paths beneath bridge structures, ensuring proper flow and minimizing flood risk.
- **Undermined Embankment Repairs** involving stabilization techniques to restore roadway support and prevent future erosion.
- **Tree Trimming and Removal** to improve visibility, maintain clear zones, and protect bridge and box culvert structures from encroaching vegetation.
- **Painting** to protect bridge and box culvert structures and restore aesthetic appearance.
- **Other tasks** have included pipe repair, scupper cleaning, expansion joint replacement, pressure washing, handrail repair, and fender system repair.

Each project has been completed in a timely manner and in accordance with all applicable specifications and regulations. In addition, Southern Road and Bridge has demonstrated adaptability in the field, responding effectively to unforeseen conditions while maintaining clear communication with us.

Based on their performance and my experience with them, I would recommend Southern Road and Bridge for any agency or municipality in need of a capable and dependable contractor for bridge and box culver related maintenance and repair work. Should you have any questions or require further information please feel free to contact me.

Sincerely,

John Taylor

22211 U.S. Highway 19 North, Building 1
Clearwater, FL 33765
Phone (727) 464-8900
V/TDD (727) 464-4062
Pinellas.gov

3549 SW Corporate Parkway
Palm City, FL 34990

February 24, 2025

SUBJECT: Financial Project ID: 442622-9-52-01

Contract Number: E8U06

Project Description: Rehabilitation of Aging Pre-stressed Concrete Piles

County: Turnpike Various Bridge Locations (MP 142.2 to 192.4)

To Whom it may concern,

Consor Engineers had the experience of working with Southern Road and Bridge on the above referenced project. Consor Engineers was the owners representative and Southern R&B was the contractor. As owners representative, we were responsible for all verification testing, contract administration, monthly payments, RFIs, shop drawings, and overseeing day to day construction.

During the life of the project, we had challenges with permitting and design that we were able to work through and find a solution without affecting the delivery of the project. Working with Ryan Finnie, it was easy to find amenable solutions that were right for the project and the contractor. In addition, Southern R&B had to work out agreements for access to the project site with the City of Port St. Lucie, a third party to the project. During this process they were professional, cooperative, and worked with the City to find a great solution. Southern R&B performed quality work and was willing to work with our staff and the team. The project was completed within contract time and under budget. It was a pleasure working with Ryan Finnie and his team. I would recommend Southern R&R for future project of similar scope and size.

If you have any questions or need additional information, please feel free to contact me at your earliest convenience.

Sincerely,

Randy Scott, P.E.

Vice President

Consor Engineers, LLC

Phone Number 772-475-9680 | rscott@consoreng.com

Encl: Fee Proposal

Washington State Department of Transportation

South Central Region
2809 Rudkin Road
Union Gap, WA 98903-1648
509-577-1600 / FAX: 509-577-1603
TTY: 1-800-833-6388
www.wsdot.wa.gov

February 20, 2025

Contract Number: XE3434
Financial Project Number: NHPP-0395(122)
Benton and Franklin Counties, Washington
Pioneer Memorial Bridge - Bridge Painting Stage 2 Project

Subject: Letter of Recommendation

Dear Mr. Pappas,

As you are aware, Southern Road & Bridge recently completed the Pioneer Memorial Bridge - Bridge Painting Stage 2 Project located in US 395 between MP 18.59 and MP 19.07 between Kennewick and Pasco, Washington. The project's scope included cleaning of the existing approaches and super structure's structural steel via dry abrasive blasting and painting using a new three-part application system. This project introduced a containment system which was new to the WSDOT Southcentral Region which led to long review times which used close to one third of the allowed contract time. However, despite the review and approval time that was used, Southern Road & Bridge, along with Extreme Sandblasting and Painting and other subcontractors, demonstrated a remarkable ability to execute this bridge coating project on time, within budget, and to the client's satisfaction.

This letter of recommendation acknowledges Southern Road & Bridge's expertise, attention to detail, and project commitment in delivering a high-quality product on a project with a high degree of complexity. Our office has had the pleasure of working closely with you and your team at Southern Road and Bridge for the past eighteen months. During this time, we were able to witness your team's professionalism and commitment to excellence. The team members that helped successfully deliver the Pioneer Memorial Bridge - Bridge Painting Stage 2 Project besides yourself, included Pete Pantelis, Tanya Pilarinos, John Koulianos, Mahmoud Rafraf and the other project personnel who spent their weeks on this project.
In summary, our office has high confidence in Southern Road and Bridge's ability to successfully undertake and complete bridge coating projects of increasing scale or complexity and believes your company would be an excellent choice for any future client's needs.

Respectfully,

Hector Mendez
Washington State Department of Transportation
Transportation Engineer 3
Project Manager

CEI Project Certification

February 18, 2025
Mr. Lucas Pappas
Managing Manager
Southern Road & Bridge
2997 Alt. 19, Suite B
Palm Harbor, Florida 34683

RE: Contract Number: ITB-23-13739-PC
Osceola County Public Works Osceola County, Florida
Old Lake Wilson Rd. Bridge #924147
Subject: Letter of Recommendation

Dear Mr. Pappas,

I am writing to formally recognize the excellent work Southern Road & Bridge performed on the maintenance repairs for the Old Lake Wilson Rd. Bridge #924147. As you are aware, this project involved a variety of tasks, including the replacement of expansion joint seals, repair of minor spalling, replacement of guardrails, vegetation removal, installation of reflectors and barrier delineators, slope protection, and the placement of rubble riprap. Additionally, construction activities included mobilization, maintenance of traffic, sediment barriers, clearing and grubbing, removal of existing guardrails, and minor earthwork.

Moreover, Southern Road & Bridge demonstrated exceptional responsiveness when undertaking emergency repairs to the roadway caused by settlement. The road had to be closed, and traffic diverted to other major highways. Thanks to your team's prompt action and close coordination with the Construction Engineering Inspection firm and the county, the road was fully repaired in approximately 36 hours. This quick response prevented what could have been a catastrophic failure of the roadway.

Southern Road & Bridge's performance on the Old Lake Wilson Rd. Bridge project was exemplary. The project was completed on time, within budget, and to the satisfaction of the client, highlighting your team's expertise, attention to detail, and strong commitment to quality.

Over the past 11 months, we have had the pleasure of working closely with you and your team. Throughout this time, we have observed your professionalism and dedication to excellence. In addition to yourself, we would like to acknowledge the contributions of Dallas Fortner, Tanya Pilarinos, Jason Latinka, and the other members of your team who dedicated weekends and late nights to ensuring the project's success.

In conclusion, we have full confidence in Southern Road & Bridge's ability to successfully manage and complete bridge maintenance projects of increasing scale and complexity. We believe your company would be an outstanding choice for any future projects and clients.

By submitting this letter, CONSOR Engineers LLC certifies that, based on our review of the provided information, this project was executed in reasonable conformance with the contract documents.

If you have any questions or require further clarification, please feel free to contact me.

Sincerely,
Consor Engineers, LLC

M. Allen Gault, Jr., CS Senior Project Administrator

(407)460-9322 agault@consoreng.com

HNTB Corporation
The HNTB Companies
Infrastructure Solutions

200 Colonial Center Pkwy., Ste 200
Lake Mary, FL 32749

Telephone (407)-805-0355
hntb.com

October 16, 2023

Mr. Lucas Pappas
President, Managing Manager
Southern Road & Bridge
715 Wesley Avenue
Tarpon Springs, Florida 34689

Contract Number: BED60
Financial Project Number: 436436-1-52-13
Seminole and Volusia Counties, Florida
Lake Monroe Drawbridge Painting Project
Subject: Letter of Recommendation
Letter No. 018.01

Dear Mr. Pappas,

As you are aware, Southern Road & Bridge recently completed the Central Florida Rail Corridor (CFRC) Lake Monroe Drawbridge Painting Project located at MP 763.1 over the St. John's River near Sanford, Florida. The project's scope included cleaning of the existing structural steel via dry abrasive blasting and painting using a new three-part application system for the 113 feet bascule lift span. This work was conducted within the SunRail railroad corridor and over a navigable waterway which presented numerous challenges and limited work windows to your project team. However, despite the rail and marine traffic constraints, Southern Road & Bridge demonstrated a remarkable ability to execute this bridge coating project on time, within budget, and to the client's satisfaction.

This letter of recommendation acknowledges Southern Road & Bridge's expertise, attention to detail, and project commitment in delivering a high-quality product on a project with a high degree of complexity including CFRC railroad and lift span operational constraints. Our office has had the pleasure of working closely with you and your team at Southern Road and Bridge for the past fourteen months. During this time, we were able to witness your team's professionalism and commitment to excellence. The team members that helped successfully deliver the Lake Monroe Drawbridge Painting Project besides yourself, included George Pappas, Tanya Pilarinos, Manoli Triantafillos, Jason Colahan and the other project personnel who spent their weekends including nights on this project.

In summary, our office has high confidence in Southern Road and Bridge's ability to successfully undertake and complete bridge coating projects of increasing scale or complexity and believes your company would be an excellent choice for any future client's needs.

If you should have any questions, please feel free to contact our office.

Best regards,

Trent L Carmichael

Digitally signed by Trent L Carmichael
DN: CN=Trent L Carmichael, dnQualifier=A01410C00000187FCE612EA000D55BE, O=HNTB Corporation, C=US
Date: 2023.10.16 15:00:31-04'00'

Trent L. Carmichael, P.E.
Senior Project Engineer
HNTB Corporation

Cc: Marc Gregory, HNTB
Project file

MARLIN

Date: November 19, 2024

To: Southern Road and Bridge (SRB)
Attn: Manolis Triantafillos, Superintendent
715 Wesley Ave
Tarpon Springs, FL 34689

Re: 13 Tri-Rail Pedestrian Bridges Rehabilitation Project

To Whom it May Concern,

My name is Aycel Freda, P.E., and I served as the Construction Project Manager for the South Florida Regional Transportation Authority's (SFRTA) Pedestrian Bridges Rehabilitation Project from October 2024 to September 2025.

I am writing to endorse Southern Road and Bridge (SRB), with Manolis Triantafillos as the on-site Superintendent, who was responsible for the painting and rehabilitation of 13 Tri-Rail station pedestrian bridges. Throughout the project, Manolis exhibited exceptional professionalism, expertise, and attention to detail. The team demonstrated a thorough understanding of the specific requirements and challenges associated with working on pedestrian bridges located above active train rails, including the need for durability, safety, and aesthetic appeal.

The project is ongoing; however, four of the pedestrian bridges have been completed, with repairs and painting finished. The results are visually impressive and constructed to withstand the elements for many years. Manolis worked closely with our project management team, providing consistent updates and addressing any concerns promptly and effectively.

In addition to their technical skills, the team exhibited a strong commitment to safety and compliance with all relevant regulations. The work environment was organized and efficient, causing minimal disruption to the surrounding area and pedestrian traffic.

I am confident that SRB, led by Manolis, would be an excellent choice for any future painting and rehabilitation projects. I highly recommend their services and look forward to the opportunity to collaborate with them on future endeavors.

Please feel free to contact me at afreda@marlinengineering.com if you need any further information.

Sincerely,

Aycel Freda, P.E
Project Manager

Mark James McCombs, P.E.

453 SW 28th Ave
Delray Beach, FL 33445

To whom it may concern,

I had the pleasure of working with Southern Road and Bridge (SRB) and Manolis Triantafillos on the rehabilitation project for SFRTA in Palm Beach, Broward and Miami-Dade Counties. The project entailed the blasting, repair and recoating of 13 tubular steel pedestrian bridges. During our time together, I worked directly with Mr. Triantafillos. He was helpful and cooperative at all times. His knowledge, along with his integrity were second to none.

Mr. Triantafillos worked efficiently while providing a product that exceeded expectations. He was very proactive, identifying potential issues before they happened. Mr. Triantafillos always had a solution to present any time he identified the potential issue. His actions often saved time and cost for both his employer and his customer/client.

The most important virtue that SRB and Mr. Triantafillos bring to the table is the pride they take in providing an exceptional product to their clients. I would not hesitate to work with Mr. Triantafillos and SRB again and extend my strongest recommendation for anybody considering securing their services.

Please feel free to contact me if you have any questions with regard to Mr. Triantafillos or SRB.

Sincerely,

Mark (Jim) McCombs, P.E.

jim.mccpombs6@gmail.com
(941) 815-3588

City of New Port Richey

'The Gateway To Tropical Florida'

5919 Main Street, New Port Richey, Florida 34652

To Whom It May Concern,

I am writing to recommend the construction services of Southern Road and Bridge, LLC. Their knowledge and attention to detail were outstanding. They worked on several tanks, pipes and buildings and was completed on time. I am confident in my recommendation of Southern Road and Bridge, LLC for any type of Painting & Rehabilitation Project. Additionally, their Administrative Staff was easy to work with, and Safety was never an issue,

Thank You

Joe Palazzolo
Chief Operator
City of New Port Richey, WWTP
727/841/4569
1/22/21

Joe Palazzolo

Manchac
CONSULTING GROUP, INC.

January 19, 2021

Subject: Water Tank Rehabilitation and Painting NE Tower/ Water Tank Rehabilitation and Painting LA 71 South
Project # P20-03 & P20-02
Manchac Project # 1002.605

To Whom It May Concern,

I am writing to recommend the construction services of Southern Road and Bridge, LLC whom which I worked with on the subject projects. Their knowledge and attention to detail were outstanding. Both project were completed within the duration set forth in the specifications.

I feel confident in recommending Southern Road and Bridge, LLC for any type of Painting & Rehabilitation Project. Additionally their Administrative Staff was not only thorough, but also easy to work with, and always willing to take the time to discuss my concerns or respond to any questions that came about on both projects.

Sincerely,

Todd Thompson
Manchac Consulting Group, Inc.

A&P ENGINEERS
8935 N.W. 35th Lane, Suite 200
Doral, Florida 33172

08/19/2019

Mr. Emmanuel Triantafilos
Southern Road and Bridge
715 Wesley Avenue,
Tarpon Springs, Florida 34689

Dear Mr. Triantafilos,

It is my pleasure to provide this personal letter of recommendation for you, based on my experience serving as Consultant Project Engineer for the Construction Engineering and Inspection (CEI) team for the following project in which you were the Construction Project Manager / Superintendent:

- FDOT District 4 Bridge Painting of SR-858, which involved full removal and replacement of the structural steel coating system of the SR-858/Hallandale Beach Blvd Bascule Bridge over the Intracoastal Waterway, including movable bridge preventive maintenance and routine repair, adjusting movable bridge counterweight, and providing movable bridge operator (Approximate Cost: $1.5M)

Under your leadership, your staff provided an excellent quality bridge paint job, prepared safe containment, and complied with environmental requirements. Your exceptional cooperation and communication with our inspection staff as well as the public information officer assigned to the project are also very much appreciated. You provided all submittals in a timely manner, including pre-construction submittals, project schedules, and invoicing backup documentation. The final Contractor Past Performance Rating (CPPR) was a perfect score of 98.

The Hallandale Beach Blvd project was successfully completed in 144 days, when the allowed contract time was 291 days, 1/2 of the allowed time.

If you have any questions, please feel free to contact me at (305) 283-9816.

Sincerely,

Erik Sibila

Digitally signed by Erik Sibila
DN: c=US, o=AP CONSULTING TRANSPORTATION ENGINEERS CORP, ou=A01427D000001696D441D80000 00538, cn=Erik Sibila
Date: 2019.08.19 13:34:16 -04'00'

Erik Sibila, PE, CGC, MSCE
CEI Project Engineer

A&P ENGINEERS
8935 N.W. 35th Lane, Suite 200
Doral, Florida 33172

07/16/2019

Mr. Lucas Pappas
Southern Road and Bridge
715 Wesley Avenue,
Tarpon Springs, Florida 34689

Dear Mr. Pappas,

It has been a pleasure to serve as a Consultant Project Engineer for the Construction Engineering and Inspection (CEI) team for the following project performed by Southern Road and Bridge for FDOT District 4 in Broward County:

- Bridge Painting of SR-838 Sunrise Blvd over SR-441, which involved pressure cleaning and painting of two steel bridges as well as applying Class 5 concrete coating to abutments, piers, and concrete barrier walls (Approximate Cost: $874,000)

Your entire staff from top down provided an excellent quality bridge paint job, prepared safe containment, complied with environmental requirements, and cooperated and communicated with our inspection staff as well as the public information officer assigned to the project. Your office personnel provided all submittals in a timely manner, including pre-construction submittals, project schedules, and invoicing backup documentation. The final Contractor Past Performance Rating (CPPR) was a perfect score of 98.

The Sunrise Blvd project was successfully completed in 85 days, when the allowed contract time was 262 days, 1/3 of the allowed time.

If you have any questions, please feel free to contact me at (305) 283-9816.

Sincerely,

Erik Sibila

Digitally signed by Erik Sibila
DN: c=US, o=AP CONSULTING TRANSPORTATION ENGINEERS CORP, ou=A01427D000001696D441D8000000538, cn=Erik Sibila
Date: 2019.07.16 17:30:52 -04'00'

Erik Sibila, PE, CGC, MSCE
CEI Project Engineer

July 15, 2019

George Pappas
715 Wesley Avenue
Tarpon Springs, Florida 34689

ATTN: Mr. George Pappas
Field Superintendent

RE: Project: SR 408 Aesthetic Coatings Renewal
Project No.: 599-734
Contract No.: 001279
Contractor: Southern Road and Bridge.
O/G No.: 024
Mehta Reference Letter

Dear Mr. Pappas,

This reference letter is to acknowledge our appreciation with Southern Road and Bridge's excellent work in completing the subject coatings renewal project on time and under budget. This project was challenging as the cleaning and coating work was going on concurrent with other Central Florida Expressway Authority (CFX) work within the project limits of the coating project. Southern Road and Bridge was very cooperative working with our Mehta CEI team and the other active concurrent project teams and with coordination of vegetation removal with the owner CFX maintenance division.

The tell tail sign of an excellent quality project is when we get to the semi-final inspection and all work is found to be acceptable, by all, with no deficiency list items and the semi-final inspection becomes the final inspection and the project is ready to be recommended for final acceptance to the owner, which was the case with this project. Great Job!!

We look forward to working with Southern Road and Bridge on similar future CFX projects.

Sincerely,

Michael Schawe
Project Administrator | Mehta and Associates, Inc.
One Purlieu Place, Suite 100, Winter Park, FL 32792
Office (407) 657-6662 | Cell (407) 687-8148
mschawe@mehtaeng.com
MEHTA

cc:
Mike Schawe, P.A. MEHTA
Andrew Bailey, P.E. MEHTA
Lucas Pappas, SRB
Paul Vinik, P.E. GPI
Files : O/G 024, 301

Florida Department of Transportation

RON DESANTIS
GOVERNOR

Panama City Operations
3633 W. Highway 390
Panama City, FL 32405

KEVIN J. THIBAULT, P.E.
SECRETARY

DATE: 01/23/2020

To Whom it may concern:

Please find this letter of recommendation for Southern Roads and Bridge an A+ for upcoming projects that they propose an interest in. Their quality of work was top of the line and as well as the important documents sent in from the main office (correct and on time). This is the second project that I have had with Southern Roads and Bridge and both has turned out excellent.

1.) The painting of West Bay Bridge over the Intercostal waterway (Bay County, Fl.).
2.) Dupont Bridge abutment repair after Hurricane Michael (Bay County, Fl.)

I would highly recommend Southern Roads and Bridge for any future projects.

Charles E. Kennedy – FDOT Project Manager/Project Oversite

Charles E Kennedy

Digitally signed by Charles E Kennedy
Date: 2020.01.23 06:03:51 -06'00'

FDOT

Florida Department of Transportation

RON DESANTIS
GOVERNOR

Heartland Operations Center

KEVIN J. THIBAULT, P.E.
SECRETARY

Arcadia Office
1190 W Oak Street
Arcadia, Florida 34266

Labelle Office
880 W Cowboy Way
Labelle, Florida 33935

Sebring Office
4722 Kenilworth Boulevard
Sebring, Florida 33870

May 24, 2021

Southern Road & Bridge
715 Wesley Avenue
Tarpon Springs, FL 34689

RE: Reference

To Whom It May Concern:

The above referenced company did complete the Highlands County Structures Repairs at US 98 over Kissimmee River, US 98 over Lorida Creek and US 98 over Istokpoga Canal.

The Contractor performed the work as set forth in the plans. The project materials were certified and accepted. Southern Road & Bridge had the equipment necessary to complete the project. The project was completed on time and within budget.

Sincerely,

Stacy S Hill

Digitally signed by Stacy S Hill
Date: 2021.05.24 09:28:41 -04'00'

Stacy Hill
Construction Project Manager

Office of Operations/District 05
PO Box 4068 | Monroe, LA 71211-4068
8010 DeSiard Street | Monroe, LA 71203
ph: 318-342-0147 | fx: 318-342-0264

John Bel Edwards, Governor
Shawn D. Wilson, Ph.D., Secretary

Letter of Reference

To whom it may concern,

I am writing to provide a letter of reference for Southern Road & Bridge for Louisiana State Project H.011766.6. This project consisted of the rehabilitation of thirteen bridge structures over I-20 in Lincoln, Ouachita, Richland, and Madison Parishes.

The rehabilitation consisted of two structures having a latex modified concrete overlay installed, ten structures having the existing steel girders cleaned and painted, three structures having CFRP repairs made to prestressed precast concrete girders, and various concrete repairs to the substructures and superstructures and bearing replacements on all thirteen structures.

Southern Road & Bridge began the project in December 2017 and completed the project in November 2020 on schedule. Southern Road & Bridge also adhered to all Louisiana Department of Transportation and Development (LADOTD) contract specifications, DEQ specifications, and Federal Highway Administration (FHWA) specifications throughout the project.

Matt Jantz, PE
Project Engineer

Michael Baker
INTERNATIONAL

We Make a Difference

July 7, 2023

Southern Road & Bridge, LLC
40715 Wesley Avenue
Tarpon Springs, FL 34689

Re: Letter of Recommendation for Specialty Bridge Work Performed

Dear Sir or Madam:

Michael Baker International served as Engineer of Record on a bridge repair and maintenance project for the City of Mobile. Southern Road and Bridge, LLC successfully and satisfactorily completed the following project(s) for the City:

Project(s)**:**	**SITE 1 – Pedestrian Bridge over Water Street (BIN No. 017197) and SITE 2 - Beauregard Street / Robert M. Hope Overpass Over CSXT (BIN 014005) Overhead Bridge Repair, Cleaning, and Painting (City Project Nos. 2019-3005-01 / 2020-3005-06)**
Client / Owner:	**City of Mobile, Alabama**
Contract Amount:	**$1,099,040.00 Total** *($410,834.00 for Site 1 / $1,049,502.45 for Site 2)*
Contract Term:	**120 Working Days Allowed (for total contract)**
Notice to Proceed:	**October 22, 2020**
Completion Date:	**August 23, 2022**
Contractor's scope of work included:	**Repair of Steel Components and Cleaning, Sandblasting and Repainting Steel and Concrete Components**

This contract included (2) separate project sites in the downtown business district of Mobile, but Michael Baker was only responsible for overseeing construction operations for Site 2. Although there were delays in the project, they were no fault of the Contractor. CSX permitting and flagger requirements, along with the high volume of train traffic, significantly slowed the progress of work. However, Southern Road & Bridge completed all work on Site 2 within 52 working days.

The Contractor was excellent to work with on this project. Their staff was professional, knowledgeable, and responsive. They provided sufficient staff to perform the work efficiently,

effectively, and in a timely manner. Additionally, the Contractor was accommodating to both the City's special scheduling needs, such as working around large conferences and Mardi Gras festivities held in or near the area of the project sites, and other special permitting requirements of the project including coordination of construction activities in accordance with strict CSX guidelines. I would highly recommend this Contractor for any specialty bridge maintenance and repair projects.

If you should have any questions or concerns, please do not hesitate to contact me at 251-380-0898.

Sincerely,



J. Brooks Miller, Jr., P.E., PTOE
Senior Project Manager

Texas Department of Transportation
1350 E. HIGHWAY 77 | P.O. BOX 1041 | SAN BENITO, TEXAS 78586 | (956)399-5102 | WWW.TXDOT.GOV

August 1, 2022

To whom it may concern:

It was a pleasure working with Mr. Emmanuel Triantafillos (Manoli) at the Queen Isabella Causeway connecting Port Isabel & South Padre Island in Texas. Manoli really takes pride on his work by going above & beyond to provide an excellent end project. Manoli has a sense or urgency & understands his client, but he will NOT sacrifice quality. Manoli is well respected along his co-workers & TxDOT staff. Manoli constantly has a positive attitude regardless of the task at hand. Manoli is very knowledge when it comes to industrial coating projects & working along with others. Manoli took the time to personally go over with me bridge coating/painting procedures in detail. Our project was successful thanks to Manoli's leadership. I would strongly recommend Emmanuel on future industrial coating projects & look forward working with him in the nearby future.

Feel free to contact me at (956)399-5102 for further questions you might have.

Sincerely,

Andres Espinoza, P.E.

Andres Espinoza
San Benito Area Engineer

---------- Forwarded message ---------
From: **Jones, Seth (KSC-BOSS-4430)[PAE - SGT Partners LLC]** <seth.jones-1@nasa.gov>
Date: Tue, May 3, 2022 at 7:50 AM
Subject: Banana River Relief Bridge
To: George Pappas <GPappas@southernrb.com>
CC: AMARAL, BRITTANY (KSC-BOSS-4320)[PAE - SGT Partners LLC] <brittany.amaral@nasa.gov>, Vingris, Susan M (KSC)[PAE - SGT Partners LLC] <svingris@heardconstruction.com>, Henry Delgado <HDelgado@heardconstruction.com>

Good morning Mr. Pappas,

I hope this email finds you well. I wanted to take a few minutes to tell you that it was great to work with Clarence and his team. His leadership style in the construction Industry is not often seen and his team followed direction both safely and efficiently. They worked together without conflict with each other and NASA personnel, in fact they were courteous, professional, & always deferred to Clarence on matters of decision and direction. I witnessed Clarence speak to and train his team in skillsets that they wanted to improve on, and he patiently answered questions on the processes employed. Many times, I asked questions concerning their processes and he explained step by step what would be done and why. I also witnessed Clarence speak to NASA Personnel to explain various technical topics including issues addressing the expansion joints and what would be necessary to correct a previous Contractor's completed work. Clarence is a clear & effective communicator, that in part was one of the things that made me great full that he was on the team. Thank you again for the great work that your team did for Heard Construction here at NASA. Thanks to Sue & Henry from HCI for choosing a good Contractor for their team on this one. Perhaps we will have an opportunity to work together in the future.

Respectfully,

Seth Jones

Construction Inspector (NACE 3)

NASA Base Operations & Spaceport Services (BOSS)

C: (321) 432-2254

O: (321)-861-0887

A: Bldg. OSB-1, K6-1096 | Room 2301K, Kennedy Space Center, FL 32899

E: seth,jones-1@nasa.gov

W: www.pae-sgtpartners.com

IMPORTANT: The information contained in this message may be privileged, business sensitive, proprietary, copyrighted, protected from disclosure and/or subject to US export controls. If you are not the intended recipient, you are hereby notified that any dissemination, distribution or copying of this communication is strictly prohibited. If you have received this communication in error, please notify me immediately by replying to the message and deleting it from your computer.

TANK OF THE YEAR

YOUR 2020 PEOPLE'S CHOICE TANK OF THE YEAR!



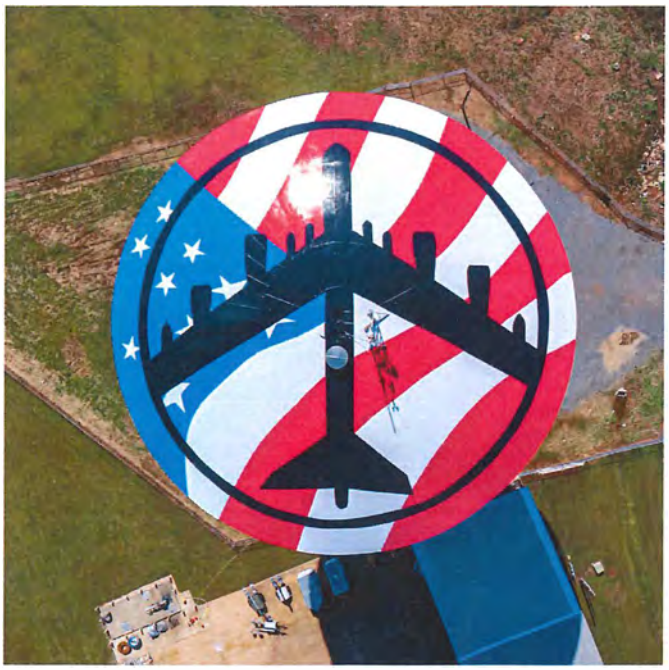

Teamwork Award

Project: Structural Steel Interstate Bridge Repairs



Construction Challenges:

- MOT restrictions
- Limited MOT hours from Localities

SOUTHERN ROAD & BRIDGE

Partnering: Contractor worked with VDOT and the Localities to develop plan of action to allow work to be completed within the MOT hours the Localities were providing.

Performance: Completed the project ahead of time and obtained full incentive

2023

Press Release

FOR IMMEDIATE RELEASE

Southern Road and Bridge Receives 2022 Best of Portland Award

Portland Award Program Honors the Achievement

PORTLAND July 27, 2022 -- Southern Road and Bridge has been selected for the 2022 Best of Portland Award in the Construction Company category by the Portland Award Program.

Each year, the Portland Award Program identifies companies that we believe have achieved exceptional marketing success in their local community and business category. These are local companies that enhance the positive image of small business through service to their customers and our community. These exceptional companies help make the Portland area a great place to live, work and play.

Various sources of information were gathered and analyzed to choose the winners in each category. The 2022 Portland Award Program focuses on quality, not quantity. Winners are determined based on the information gathered both internally by the Portland Award Program and data provided by third parties.

About Portland Award Program

The Portland Award Program is an annual awards program honoring the achievements and accomplishments of local businesses throughout the Portland area. Recognition is given to those companies that have shown the ability to use their best practices and implemented programs to generate competitive advantages and long-term value.

The Portland Award Program was established to recognize the best of local businesses in our community. Our organization works exclusively with local business owners, trade groups, professional associations and other business advertising and marketing groups. Our mission is to recognize the small business community's contributions to the U.S. economy.

SOURCE: Portland Award Program

CONTACT:
Portland Award Program
Email: PublicRelations@business-awardsusa.com
URL: http://www.business-awardsusa.com

###

Karli Beglan

From: Luke Pappas
Sent: Wednesday, April 12, 2017 1:53 PM
To: 'Lisa Sevastou'; 'Karli Beglan'; 'Tanya Pilarinos'; APadzik@southernrb.com; 'Victoria SRB'; 'Yanni Skaroulis'; 'John Koulianos'; Jimmy050205@yahoo.com; 'Jason Cheramie'; 'Richard Secor'; 'Christian Villegas'; 'Ryan Finnie'; 'gary hillier'
Subject: FW: Safespan's April 2017 Project of the Month: 7th Street Bridge

Check this out

From: Safespan Platform Systems, Inc. [mailto:dmalcolm@safespan.com]
Sent: Wednesday, April 12, 2017 8:50 AM
To: lpappas@pappascivil.com
Subject: Safespan's April 2017 Project of the Month: 7th Street Bridge

SAFESPAN
MADE IN THE USA

PROJECT OF THE MONTH



Safespan is proud to present April's project of the month,

The 7th Street Bridge!

This bridge serves the Pittsburgh, PA area.

Southern Road and Bridge was given the responsibility of providing complete access and protective shielding on this project. With Safespan in place, blasting, painting, steel repairs and deck replacement is currently ongoing for Brayman Construction.

We would like to thank Southern Road and Bridge for choosing to use Safespan's unique **Multi-Span Protective Shielding System** and **Work Platform** for access, shielding and containment**.**

Complete Access

With 65,000 sq ft of the Safespan Platform installed under the roadway deck, containment was made fast and easy to erect. This created a tight seal for full environmental protection.

Our rigid flooring allowed for vertical clearance to be maintained as vessels passing under this crossing require 39' of clearance under the bridge daily.

Safespan is prepared to custom tailor our platform to overcome any access challenges.

Learn More

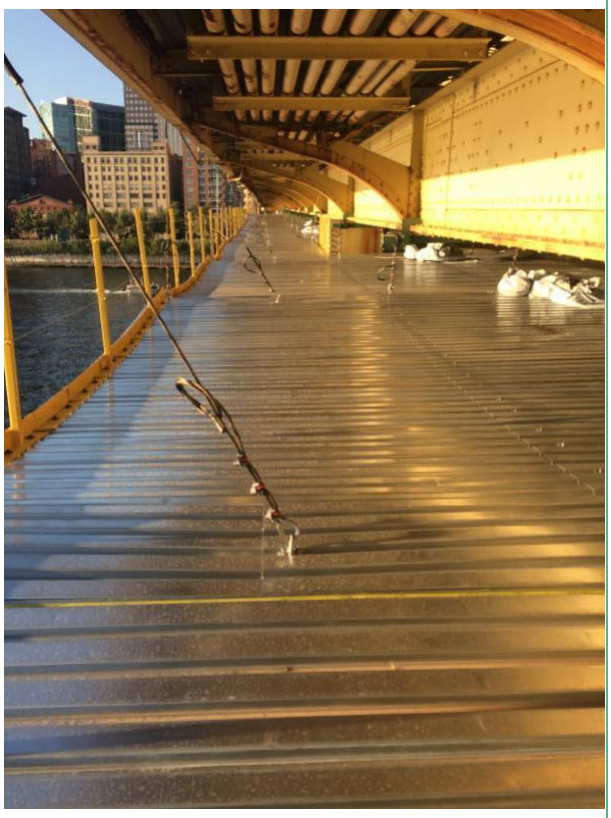

Find Out More

Safespan is employed on high profile projects nationwide. We service general contractors and painting contractors on projects of all sizes. Call us **today** to discuss how Safespan can help you deliver **safety** and higher productivity on your next project.

Sincerely,

Safespan Platform Systems, Inc.

Support you can build on.

WEBSITE PRODUCTS GALLERY ABOUT

toll free: 800.368.4010 | fax: 716.694.1188



Safespan Platform Systems, Inc. | 252 Fillmore Ave, Tonawanda, NY 14150

Unsubscribe lpappas@pappascivil.com

Update Profile | About our service provider

Sent by dmalcolm@safespan.com in collaboration with

Constant Contact

Try it free today

AGC

Washington State Department of Transportation

Nomination Form 2017

"Partnership for Excellence in Contract Administration" Award

---

Contract Number: 009064

Project Name: US101 Sol Duc River Bridges – Bridge Painting

Contractor Name: Southern Road and Bridge

Project Engineer: Chris Bruning

Date Project Accepted: Executed May 18th, 2017.

Category of Award *(please underline one category):*

Eastern Washington

- Projects Less than $3,000,000
- Projects $3,000,000-$10,000,000
- Projects Greater than $10,000,000

Western Washington

- Projects Less than $3,000,000
- Projects $3,000,000-$10,000,000
- Projects Greater than $10,000,000

Statewide

- Special Mention City/County or Other Project Administered by the WSDOT/Contractor Team

AGC

Washington State Department of Transportation

Brief Overview of Nominated Project

Project Description

This project includes the cleaning and painting of all metal surfaces on two bridges on US101 @ M.P. 194.3 and 212.5. These are overhead steel truss bridges that were in need of repainting. The project also included new paved panel joints and new expansion joints on the driving surface of the bridges.

Customer-Focused Administration

During the course of the project, it was evident that Southern Road and Bridge wished to perform the highest quality work within the least amount of time. They also partnered with WSDOT on more than one occasion to mitigate the impacts to the traveling public by opening up both lanes when construction activities were not ongoing. This was greatly appreciated by the surrounding community during a weekend festival in Forks, WA. Southern Road and Bridge was receptive and very quick to respond to any requests by WSDOT.

Innovative Problem Solving

Southern Road and Bridge proposed a cost reduction to the project to utilize recyclable abrasive blast media to remove the existing paint, rust, and other foreign material on the steel bridges. By utilizing recyclable abrasive blast media they were able to complete the blasting with significantly less abrasive material and generated significantly less hazardous waste. The storage and disposal of hazardous waste is a force account item paid by WSDOT, and this innovative solution greatly reduced this cost to the taxpayers. Southern Road and Bridge brought up very specialized equipment to recapture, separate, and reuse the steel grit during the blasting process. It was very evident that Southern Road and Bridge was a highly experienced company whose mission was to perform very high quality work with as little impact to the environment as possible.

Overcoming Extraordinary Challenge

There were several challenges that were overcome on this project:

1. Class 1 containment was required. This is the highest level of containment and Southern Road and Bridge was able to meet the specifications with no major releases.
2. Short project duration with limited working hours. This project was to be complete in 90 working days with only Sundays not being counted. Due to nesting birds in the area, the Contractor was only allowed to work between 2 hours after sunrise to 2 hours prior to sunset. To meet this aggressive schedule, Southern Road and Bridge worked numerous Sunday shifts and in the end worked

on both bridges simultaneously to complete the project within the allowable working days.

3. First WSDOT contract by an out of state company. This was Southern Road and Bridge's first WSDOT contract and they worked diligently to learn our submittal and materials acceptance processes. To add to this challenge, WSDOT bridge and structure reviews were hired out to a consultant. This meant that the lines of communication went through 1 extra channel and this added time and confusion to the process of approving submittals. Southern Road and Bridge worked diligently to return corrections asap and was able to get all submittals approved without significant delays to the project. Even during the most frustrating times, the project team from Southern Road and Bridge kept a positive attitude, responded quickly, and remained professional.
4. Weight/ Loading restrictions on the bridges. Due to weight/load restrictions, the bridges had to be painted in stages. First, the underdeck steel was painted with the requirement that only 1 lane of traffic could be allowed and had to be in the center of the bridge. Then once the underdeck platform and containment was removed, then the traffic could be swapped to one side or another to perform all the overhead work. This restriction made the task of completing the project in a short duration that much more difficult.

Effective Contract Administration

Southern Road and Bridge did a fantastic job of learning a new process and submitting all documentation prior to beginning work. The project teams communicated very well and kept a very professional attitude. Submittals and materials documentation was submitted in a timely manner and all requests from WSDOT were answered quickly. Southern Road and Bridge was also very helpful and took the time to explain any items of confusion to the WSDOT team.

Timely Completion of Project

Southern Road and Bridge worked very efficiently and was able to complete both bridges within the allowable time. They worked numerous Sundays to make this happen and they were determined to get the work done in time.

Safety

Southern Road and Bridge is a safe working company and there were no accidents on this project. They were also very helpful with ensuring that our project inspector had appropriate equipment and stayed safe at all times. They went above and beyond what was required to drive our inspector from the project site back to the shower facility each day during the blasting and painting work. In addition, when our inspector was ill, the project foreman volunteered to driver her to the local hospital. This was appreciated greatly and showed that Southern Road and Bridge cared about all members of the project team.

AGC

Washington State Department of Transportation

Chris Bruning

WSDOT Applicant Team Name (Please Print)

WSDOT Applicant Team Signature

Luke Pappas
Contractor Applicant Team Name (Please Print)

Contractor Applicant Team Signature

Completed nomination form, overview, narrative, and any other appendices must be received on or before October 31, 2017.

Mail to: Partnership for Excellence in Contract Administration Award
c/o Dan Gasche
Construction Administration Specialist
Washington State Department of Transportation
P.O. Box 47354
Olympia, WA 98504-7354
-or-

E-mail to: gasched@wsdot.wa.gov

SOUTHERN ROAD & BRIDGE
2997 Alt 19 Suite B Palm Harbor, FL 34683
O: 727-940-5395 ~ F: 727-499-7158
srb@Southernrb.com

Vehicle & Equipment List

ITEM NO.	QTY	DESCRIPTION AND CAPACITY OF ITEMS	VIN NUMBER / SERIAL NUMBER	YEAR MFGD	PURCHASE PRICE	DEPRECIATED VALUE	CURRENT NET VALUE	AGE
		VESSELS						
B-001	1	1987 HOM - Flying Squirrel Boat	FLZCA298F787	1987	$ 475.00	$ 475.00	$ -	32
B-002	1	LEL CAJUN 20' BOAT	LEL166360585	1985	$ 5,000.00	$ 500.00	$ 4,000.00	34
B-007	1	DUCKWORTH 23' (SHARK)	ESM001900480	2000	$ 5,500.00	$ 1,650.00	$ 3,850.00	19
B-008	1	MSZ 26' WHITE BOAT WITH TWIN E-TEC	MSZ00226E393	1993	$ 5,400.00	$ 540.00	$ 3,780.00	26
B-009	1	ILZ BARGE/PUSHBOAT "RITA BELLE" 36'	ILZD0021D010	2010	$ 38,500.00	$ 3,850.00	$ 30,800.00	9
B-010	1	Fisher Freedom Pontoon 22'	BUJ85424A101	2001	$ 2,000.00	$ 400.00	$ 1,600.00	18
B-011	1	FLZ Homemade Barge 40' (LUKE'S ARK)	FLZFL214G818	2018	$ 200,000.00	$ 40,000.00	$ 160,000.00	1
B-012	1	HOMEMADE/MISSISSIPPI H 48'	MIZ18820H10X	2010	$ 85,000.00	$ 8,500.00	$ 62,700.00	9
B-013	1	ALUMAWELD 17' BOAT		1978	$ 4,000.00	$ 1,200.00	$ 2,800.00	41
B-015	1	HOMEMADE FLZ 30'2"	LAZ70985G010	2010	$ 45,000.00	$ 9,000.00	$ 36,000.00	9
B-017	1	ALUMINUM AOZ 18'	AOZD0361G393	1993	$ 20,000.00	$ 4,000.00	$ 16,000.00	26
B-019	1	G3 1544 Jon Boat w/Yamaha 9.9 OB	GEN31588H617	2017	$ 5,332.00	$ -	$ 5,332.00	3
B-020	1	Alumicraft Jon Boat 14'	ACBD5729A606	2006	$ 2,510.00	$ -	$ 2,510.00	13
B-021	1	10X40X5 Barge Section #145A008	145A008		$ 39,295.75	$ -	$ 39,295.75	0
B-022	1	10X40X5 Barge Section #P-379QCV	P-379QCV		$ 39,295.75	$ -	$ 39,295.75	0
B-023	1	10X40X5 Barge Section 145C062	145C062		$ 42,319.00	$ -	$ 42,319.00	0
B-024	1	10X40X5 Barge Section 145C064	145C064		$ 42,319.00	$ -	$ 42,319.00	0
B-025	1	Cajun Special 25' Cabin	LEL15236M83L	1983	$ 13,500.00	$ -	$ 13,500.00	0
B-027	1	MIZ Mississippi H 41' Boat	MIZ18830H10X	2010	$ 48,000.00	$ -	$ 48,000.00	0
B-028	1	10X40X5 Barge Section	145C104		$ 39,295.75	$ -	$ 39,295.75	0
B-029	1	10X40X5 Barge Section	145E209		$ 39,295.75	$ -	$ 39,295.75	0
B-030	1	Crestliner C166DT	CRC102691324	2024	$ 19,804.89	$ -	$ 19,804.89	0

all boats equiped with USCG safety equipment

ITEM NO.	QTY	DESCRIPTION AND CAPACITY OF ITEMS	VIN NUMBER / SERIAL NUMBER	YEAR MFGD	PURCHASE PRICE	DEPRECIATED VALUE	CURRENT NET VALUE	AGE
		VEHICLES						
TR-003	1	Hino 195 Flat bed reg cab	JHHRDM2H7LK008737	2020	$ 52,672.12	$ -	$ 52,672.12	0
TR-011	1	2018 Ford F-250 Super Duty	1FT7X2A62JEB22002	2018	$ 44,612.96	$ 8,000.00	$ 36,612.96	1
TR-018	1	Ford E450 Super Duty Box Truck	1FDXE45S96HA81393	2006	$ 9,686.00	$ 8,000.00	$ 1,686.00	13
TR-021	1	International Tractor Trailer (Purchased from Penske in GA)	2HSCUAPR79C092166	2009	$ 27,050.00	$ 17,000.00	$ 10,050.00	10
TR-028	1	Ford F250 Crew Cab 4x4	1FTSW21538ED99157	2008	$ 21,274.00	$ 13,527.00	$ 7,747.00	11
TR-034	1	Ford E450 Super Duty Box Truck	1FDXE45S36HA86282	2006	$ 8,400.00	$ 6,800.00	$ 1,600.00	13
TR-040	1	RAM 1500	1C6RR7GG3GS144334	2016	$ 32,000.00	$ 9,600.00	$ 22,400.00	3
TR-059	1	Ford E450 Box Truck	1FDXE45S87DA80437	2007	$ 9,037.00	$ 7,229.60	$ 1,807.40	12
TR-060	1	Ford F-450 Crew Cab Diesel 11' Flatbed	1FD0W4HT0KED60973	2019	$ 57,103.54	$ 5,710.35	$ 51,393.19	0
TR-061	1	Chevrolet 3500HD 4X4 Dump Truck	1GB3KVCY8KF125662	2019	$ 52,498.00	$ 5,249.80	$ 47,248.20	0
TR-063	1	Freightliner Columbia 120	1FUJA6CK0ADAT1076	2010	$ 32,500.00	$ 26,000.00	$ 6,500.00	9
TR-064	1	Dodge Ram 2500 4 dr. 4X4 Diesel	3C6UR5DL8JG424782	2018	$ 44,612.96	$ 4,461.30	$ 40,151.66	1
TR-065	1	Freightliner Cascadia 125	3AKJGEBG2DSBX6155	2013	$ 40,900.00	$ 28,630.00	$ 12,270.00	6
TR-066	1	Chevrolet 1500 LD 4X4 5.3L Gas Service body	2GCVKPEC2K1145205	2019	$ 35,000.00	$ 3,500.00	$ 31,500.00	0
TR-070	1	Chevrolet 1500 1LT V8 LD 4X4 Gas	2GCVKPEC0K1144358	2019	$ 31,598.62	$ 3,159.86	$ 28,438.76	0
TR-071	1	Ford F-250 XL 4X4 SD 4 dr. 8' bed Gas	1FT7W2B64KED98216	2019	$ 41,142.03	$ 4,114.20	$ 37,027.83	0
TR-072	1	Ford F-250 XLK 4X4 SD 4 dr. 8' bed Gas	1FT7W2B63KEE31223	2019	$ 41,183.97	$ 4,118.40	$ 37,065.57	0
TR-074	1	Ford F-250 XL 4X4 Crew Cab 6.75 ft bed SRW	1FT7W2B64KEF82863	2019	$ 42,035.74	$ 4,203.57	$ 37,832.17	0
TR-076	1	International 7600 Workstar 6X4 2016 Guzzler Classic Vac s/n 1263732	1HTWYAHT1AJ191076	2010	$ 180,000.00	$ 54,000.00	$ 126,000.00	9
TR-078	1	Kenworth T680 Sleeper Blue	1XKYDP9X2FJ425940	2015	$ 61,458.00	$ 18,437.40	$ 43,020.60	4
TR-081	1	Ford E350 Box Truck	1FDWE3FSXGDC41441	2016	$ 12,840.00	$ 3,852.00	$ 8,988.00	3
TR-082	1	FORD F250 Ext. Cab Svc Body 2X4	3FTNX20L83MB30584	2003	$ 1,000.00	$ 920.00	$ 80.00	17
TR-086	1	RAM 2500 4X4 4 Door FLT Diesel	3C6UR5DLXJG283178	2018	$ 31,443.72	$ 6,288.74	$ 25,154.98	2
TR-088	1	FORD FT 750 Water Truck Red	N70EVM12613	1975	$ 5,000.00	$ 4,750.00	$ 250.00	45
TR-089	1	Ford F-250 Super Duty XLT V8 4 Dr Diesel 4X4	1FT7W2BT7KEF51130	2019	$ 46,500.00	$ 4,650.00	$ 41,850.00	1
TR-092	1	Freightliner FL70 Attenuator Crash Truck V...27392	1FV6HJBA1WH927392	1998	$ 31,358.88	$ -	$ 31,358.88	0
TR-093	1	Chevrolet 3500HD Diesel FB V# 76178	1GB4YSEY3MF176178	2021	$ 55,955.55	$ -	$ 55,955.55	0
TR-094	1	RAM 2500 Tradesman Diesel 4x4 Crew Cab 8ft. box 169 in. WB	3C6UR5HL8MG555886	2021	$ 49,751.36	$ -	$ 49,751.36	0
TR-095	1	International 4300SBA Water Tk V...283702	1HTMMAAM2BH283702	2011	$ 35,030.00	$ -	$ 35,030.00	0
TR-098	1	Chevrolet 4500HD 2 dr 4X4 Diesel 3 yd Dump Truck	1HTKJPVK6MH677492	2021	$ 70,016.28	$ -	$ 70,016.28	0
TR-099	1	Chev 4500HD 2dr 4X4 Diesel 4yd Knapheide dump bed	1HTKJPVK4MH198424	2021	$ 74,005.76	$ -	$ 74,005.76	0
TR-101	1	Ford F-650 6 Yd Dump Truck Diesel	1FDNF6DC2PDF01062	2023	$ 110,272.66	$ -	$ 110,272.66	0
TR-102	1	Freightliner M2106 5 Yd Dump	1FVACWDT6HHJB1801	2017	$ 70,000.00	$ -	$ 70,000.00	0
TR-103	1	Freightliner M2106 5 Yd Dump	1FVACWFD8KHKC7501	2019	$ 80,000.00	$ -	$ 80,000.00	0
TR-104	1	Chev 2500HD Diesel 4X4	2GC4YLEY8R1115084	2024	$ 59,620.00	$ -	$ 59,620.00	0
TR-105	1	Chev 2500HD Diesel 4X4	2GC4YLEYXR1115233	2024	$ 59,620.00	$ -	$ 59,620.00	0
TR-106	1	Chev 2500HD Diesel 4X4 (ON ORDER)	2GC4YLEY0R1115645	2024	$ 59,620.00	$ -	$ 59,620.00	0
TR-107	1	Ram 3500 Dually Big Horn Silver	3C63RRHL5LG166205	2020	$ 62,952.02	$ -	$ 62,952.02	0
TR-109	1	Ford F-250 4X4 Diesel King Ranch Black	1FT7W2BT8MED92525	2021	$ 68,570.02	$ -	$ 68,570.02	0
TR-110	1	Ford F-250 4X4 Diesel Lariat White	1FT7W2BT1MED42436	2021	$ 62,675.12	$ -	$ 62,675.12	0
TR-111	1	Ford E-450 Box Truck White 7.3 Gas	1FDXE4FN6MDC24846	2021	$ 53,702.94	$ -	$ 53,702.94	0
TR-113	1	Chevrolet 2500 HD 4X4 Diesel White	1GC4YNEY7PF255080	2023	$ 66,651.06	$ -	$ 66,651.06	0
TR-114	1	Toyota 4Runner 4X4 Grey	JTENU5JR5P6204266	2023	$ 53,151.49	$ -	$ 53,151.49	0
TR-115	1	Chevrolet 2500HD Diesel 4X4	2GC4YMEY0N1211453	2022	$ 59,810.82	$ -	$ 59,810.82	0
TR-116	1	Ford F250 XLT Grey	1FT7W2BTXNEF29823	2022	$ 56,219.40	$ -	$ 56,219.40	0
TR-117	1	Ford F-250 Diesel 4X4	1FT7W2BTXMED03134	2021	$ 47,395.08	$ -	$ 47,395.08	0
TR-118	1	Ram 2500 Crew Cab 4X4 Diesel Silver	3C6UR5CL1RG222833	2024	$ 61,311.05	$ -	$ 61,311.05	0
TR-119	1	Chev 2500HD Diesel 4X4 Silver	2GC4YMEYXR1237970	2024	$ 61,034.25	$ -	$ 61,034.25	0
TR-120	1	Chev 2500HD Diesel 4X4 Silver	2GC4YMEYXR1251805	2024	$ 64,739.53	$ -	$ 64,739.53	0

ITEM NO.	QTY	DESCRIPTION AND CAPACITY OF ITEMS	VIN NUMBER / SERIAL NUMBER	YEAR MFGD	PURCHASE PRICE	DEPRECIATED VALUE	CURRENT NET VALUE	AGE
TR-121	1	Ford F350 Dually Diesel 4X4 White	1FT8W3DMXRED98351	2024	$ 71,000.00	$ -	$ 71,000.00	0
TR-122	1	Chev 2500HD Diesel 4X4 Silver	2GC4YMEY4R1251251	2024	$ 64,657.97	$ -	$ 64,657.97	0
TR-123	1	Chev 2500HD Diesel 4X4 Silver	2GC4YMEY7R1251860	2024	$ 64,657.97	$ -	$ 64,657.97	0
TR-124	1	Ford F450 4X4 Crew Diesel Service Body	1FD0W4HTXCEB23733	2012	$ 42,997.40	$ -	$ 42,997.40	0
TR-125	1	Ford F550 4X4 Crew Diesel Flatbed	1FDOW5HT2FEC56223	2015	$ 41,809.00	$ -	$ 41,809.00	0
TR-127	1	GMC 2500HD 4X4 Diesel Met. Sterling Silver	1GT49LEY5RF461101	2024	$ 63,592.88	$ -	$ 63,592.88	0
TR-128	1	Ford F550 Enc Serv Body.51342	1FDUF5GT9GEA51342	2016	$ 19,493.90	$ -	$ 19,493.90	0
TR-129	1	FRHT M2 106 Peterson RS3 Grapple Truck	1FVACXDT3DHFG7693	2013	$ 69,371.70	$ -	$ 69,371.70	0
TR-130	1	Chev 2500HD 4X4 Diesel Silver	2GC4YMEY2P1701511	2023	$ 55,299.16	$ -	$ 55,219.16	0
TR-131	1	Chev 3500HD 4X4 Diesel White	1GB4YSEY9RF423288	2024	$ 73,315.99	$ -	$ 73,315.99	0
TR-132	1	Chev 3500HD 4X4 Diesel White	1GB4YSEYXRF423297	2024	$ 73,315.99	$ -	$ 73,315.99	0
TR-133	1	Chev 1500 4X4 4dr White Gas	3GCPKAEK5SG160723	2025	$ 41,960.00	$ -	$ 41,960.00	0
TR-134	1	Chev 1500 LT 4X4 4dr Silver Gas	3GCPKKEK0SG185888	2025	$ 56,337.54	$ -	$ 56,337.54	0
TR-135	1	HINO 195 Reg. Cab 21' Flatbed	JHHSDM2H6HK004753	2017	$ 33,720.00	$ -	$ 33,720.00	0
TR-136	1	Ram 2500 Diesel 4X4 Billet Silver	3C6UR5CL0RG234388	2024	$ 66,410.88	$ -	$ 66,410.88	0
TR-137	1	Ram 2500 Diesel 4X4 Billet Silver	3C6UR5CL4RG318908	2024	$ 58,668.22	$ -	$ 58,668.22	0
TR-138	1	Ram 2500 Diesel 4X4 Billet Silver	3C6UR5CL5RG277916	2024	$ 59,407.76	$ -	$ 59,407.76	0
TR-139	1	Ram 2500 Diesel 4X4 Billet Silver	3C6UR5CL1RG378189	2024	$ 59,407.76	$ -	$ 59,407.76	0
TR-140	1	Ram 3500 Diesel 4X4 Billet Silver .	3C63R3HL0RG167848	2024	$ 74,448.98	$ -	$ 74,448.98	0
TR-141	1	Ram 2500 Diesel 4X4 Granite Crystal	3C6UR5CL4SG562774	2025	$ 58,074.81	$ -	$ 58,074.81	0
TR-142	1	Ram 2500 Diesel 4X4 Granite Crystal	3C6UR5CL6SG562775	2025	$ 58,074.81	$ -	$ 58,074.81	0
TR-143	1	Ram 2500 Diesel 4X4 Granite Crystal	3C6UR5CL8SG562776	2025	$ 58,074.81	$ -	$ 58,074.81	0
TR-144	1	Ford E450 14' Box Truck White	1FDXE45S78DB20749	2008	$ 9,100.73	$ -	$ 9,100.73	0
TR-145	1	Ram 2500 Diesel 4X4 Black	3C63R5FLXSG505082	2025	$ 91,000.00	$ -	$ 91,000.00	0
TR-146	1	Hino 268 Attenuator TMA Air Brakes	5PVNE8JT6B4S53737	2011	$ 65,040.00	$ -	$ 65,040.00	0
TR-147	1	Freightliner M2 Attenuator Blue	3ALACWDTOGDHK4346	2016	$ 71,312.98	$ -	$ 71,312.98	0
TR-148	1	Ford F550 Svc Body Crane Truck	1FD0W5GT6GEA72504	2016	$ 32,435.60	$ -	$ 32,435.60	0
TR-149	1	Ram 2500 Diesel 4X4 Billet Silver	3C6UR5CL7RG326677	2024	$ 62,200.23	$ -	$ 62,200.23	0
TR-150	1	Ram 2500 Diesel 4X4 White	3C6UR5FL8GG284612	2016	$ 25,740.00	$ -	$ 25,740.00	0
TR-151	1	Ford Expedition XLT 4X4 Silver	1FMJU1J88REA54726	2024	$ 53,666.46	$ -	$ 53,666.46	0
TR-152	1	FRHT M2 106 Attenuator	1FVACWFBXKHKG3334	2019	$ 89,748.00	$ -	$ 89,748.00	0
TR-153	1	Ford E350 Box Truck	1FDWE3FL6GDC06582	2016	$ 13,710.94	$ -	$ 13,710.94	0
TR-154	1	Ram 2500 Diesel 4X4 Silver	3C6UR5HL8RG410211	2024	$ 60,970.45	$ -	$ 60,970.45	0
TR-155	1	Chev 2500 Custom Diesel 4X4	1GC1KMEY8SF313351	2025	$ 68,689.08	$ -	$ 68,689.08	0
TR-156	1	Chev 5500 Crew Cab Svc Body	1HTKJPVK3NH565685	2022	$ 86,550.00	$ -	$ 86,550.00	0
TR-157	1	Chev 1500 4X4 4dr Gas Silver	1GCPKBEK3SZ276489	2025	$ 47,181.16	$ -	$ 47,181.16	0
TR-158	1	Ram 3500 Diesel 4X4 Dually Silver Zynith	3C63RRGL0TG152701	2026	$ 66,128.93	$ -	$ 66,128.93	0
TR-159	1	Ford F350 XL DRW Diesel 4X4 8'box White	1FT8W3DT2TEC56798	2026	$ 74,603.16	$ -	$ 74,603.16	0
TR-160	1	Chev 3500 Crew Diesel 4x4 FB.RF426112	1GB4YSEY9RF426112	2024	$ 74,775.12	$ -	$ 74,775.12	0
TR-161	1	Chev 3500 Diesel 4X4 FB White	1GB4YSEY7RF382904	2024	$ 73,794.81	$ -	$ 73,794.81	0
TR-162	1	Chevrolet 3500 Diesel 4X4 Flatbed Enterprise	1GB4KSEY7TF122754	2026	$ 76,618.47	$ -	$ 76,618.47	0
TR-163	1	Hino 195 Flatbed Stakeside	JHHSDM2H6LK010884	2020	$ 27,995.00	$ -	$ 27,995.00	0
TR-164	1	Volvo T860 Semi Black	4V4BC9EJ8TN707364	2026	$ 198,193.00	$ -	$ 198,193.00	0
TR-165	1	Chev 2500 Diesel 4X4 Silver	2GC4KLEY8T1150099	2026	$ 65,988.74	$ -	$ 65,988.74	0
TR-166	1	Chev 2500 Diesel 4X4 Silver	2GC4KLEY8T1150202	2026	$ 65,988.74	$ -	$ 65,988.74	0
TR-167	1	Chev 2500 Diesel 4X4 Silver	2GC4KLEYXT1150041	2026	$ 65,988.74	$ -	$ 65,988.74	0
TR-168	1	Chev 2500 Diesel 4X4 Silver	2GC4KLEY3T1150088	2026	$ 65,988.74	$ -	$ 65,988.74	0
TR-169	1	Chev 2500 Diesel 4X4 Silver	2GC4KLEYXT1150069	2026	$ 65,988.74	$ -	$ 65,988.74	0
TR-170	1	Ford F250 XL Diesel 4X4 White	1FT8W2BT7TEC58155	2026	$ 69,955.00	$ -	$ 69,955.00	0
TR-171	1	Toyota 4Runner Gas 4X4 Cutting Edge Silver	JTEVA5BR9T5088819	2026	$ 48,825.10	$ -	$ 48,825.10	0
TR-172	1	Chev 2500 Diesel 4X4 Silver	1GC4KLEY3TF250443	2026	$ 66,858.49	$ -	$ 66,858.49	0
TR-173	1	Chev 2500 Diesel 4X4 Silver	1GC4KLEY6TF250792	2026	$ 66,858.49	$ -	$ 66,858.49	0
TR-174	1	International 4300 Attenuator	1HTMMMML9JH530314	2018	$ 56,170.00	$ -	$ 56,170.00	0

ITEM NO.	QTY	DESCRIPTION AND CAPACITY OF ITEMS	VIN NUMBER / SERIAL NUMBER	YEAR MFGD	PURCHASE PRICE	DEPRECIATED VALUE	CURRENT NET VALUE	AGE
		TRAILERS						
TL-001	1	STAGECOACH GOOSENECK TRAILER	5NYGU242ENSC7646	2014	$ 3,724.50	$ 372.45	**$ 3,352.05**	6
TL-002	1	BIX TEX TRAILER	16VPX2026L2051622	2020	$ 4,813.74	$ -	**$ 4,813.74**	0
TL-003	1	EAGLE CARGO TRAILER	1E9211622F1549125	2015	$ 3,500.00	$ 350.00	**$ 3,150.00**	5
TL-004	1	TEREX / LOAD KING	5LKL5335481027412	2008	$ 32,554.76	$ -	**$ 32,554.76**	12
TL-005	1	HOMESTEADER	NCX1242527	2019	$ 3,050.00	$ 305.00	**$ 2,745.00**	1
TL-006	1	CARRY ON TRAILER	44MBU1626KG013757	2019	$ 2,739.99	$ 273.99	**$ 2,466.00**	1
TL-007	1	PJTM	4P5P62027J1281905	2018	$ 3,058.00	$ 305.80	**$ 2,752.20**	2
TL-008	1	EXPR	5GLBE16222C000682	2002	$ 1,000.00	$ 100.00	**$ 900.00**	18
TL-009	1	HOMESTEADER - NOT REGISTERED	5HABE1218AN001962	2010	$ 8,500.00	$ 850.00	**$ 7,650.00**	10
TL-012	1	FRUEHOFF	1H4B041121JL027206	1988	$ 16,500.00	$ 1,650.00	**$ 14,850.00**	32
TL-013	1	BIB-TEX	16VNX1427L3047438	2020	$ 2,695.00	$ -	**$ 2,695.00**	0
TL-015	1	CARRY-ON TRAILER	4YMBU1824KT017942	2019	$ 2,432.00	$ 243.20	**$ 2,188.80**	1
TL-017	1	RANGER DECON TRAILER	1R9BS3024JG547122	2018	$ 52,000.00	$ 5,200.00	**$ 46,800.00**	2
TL-018	1	WABASH VAN TRAILER	1JJV532WX7L039950	2007	$ 1,300.00	$ 130.00	**$ 1,170.00**	13
TL-019	1	LARK ENCLOSED TRAILER	5RTBE1428KD069878	2019	$ 4,311.42	$ 431.14	**$ 3,880.28**	1
TL-020	1	TFI TRAILER	17YGN402XYB019545	2000	$ 1,500.00	$ 150.00	**$ 1,350.00**	20
TL-022	1	LEGEND GOOSENECK	5D3BG3226YE101054	2000	$ 1,500.00	$ 150.00	**$ 1,350.00**	20
TL-023	1	BARRENTINE TRAILER	53VBC2023KG033893	2019	$ 3,500.00	$ 350.00	**$ 3,150.00**	1
TL-024	1	UTILITY SPREAD FB	1UYFS24895A634846	2005	$ 1,500.00	$ 150.00	**$ 1,350.00**	15
TL-025	1	COVERED WAGON	53FBE242XJF041896	2018	$ 6,841.77	$ 684.17	**$ 6,157.60**	2
TL-027	1	LUFKIN 45' FLOAT DROP	1L01B4533T1123204	1996	$ 7,240.00	$ 724.00	**$ 6,516.00**	23
TL-028	1	FONTAINE 48' ALUMINUM	1FTW68048W5AWK	2004	$ 7,240.00	$ 724.00	**$ 6,516.00**	15
TL-029	1	FONTAINE 48' ALUMINUM	13N14830561531700	2006	$ 6,710.00	$ 671.00	**$ 6,039.00**	13
TL-030	1	FONTAINE 48' ALUMINUM	13N14830451530701	2005	$ 7,770.00	$ 777.00	**$ 6,993.00**	14
TL-031	1	TRANSCRAFT 48' ALUMINUM	1TTF4820952012853	2005	$ 8,830.00	$ 883.00	**$ 7,947.00**	14
TL-032	1	HOMESTEADER	5HABE1620KN070097	2019	$ 3,900.00	$ 390.00	**$ 3,510.00**	0
TL-033	1	Lufkin	1L01B4021M1092261	1991	$ 1,500.00	$ 150.00	**$ 1,350.00**	13

ITEM NO.	QTY	DESCRIPTION AND CAPACITY OF ITEMS	VIN NUMBER / SERIAL NUMBER	YEAR MFGD	PURCHASE PRICE	DEPRECIATED VALUE	CURRENT NET VALUE	AGE
TL-034	1	WABASH VAN TRAILER	1JJV532W81L734953	2001	$ 1,797.00	$ 179.70	$ 1,617.30	18
TL-036	1	FONTAINE FB	13N145C781564458	1995	$ 4,155.00	$ 415.50	$ 3,739.00	24
TL-037	1	WABASH VAN TRAILER	1JJV532U9ML153187	1991	$ 3,000.00	$ 300.00	$ 2,700.00	28
TL-039	1	CARRY ON TRAILER	4YMBU2428KG000937	2019	$ 5,730.36	$ -	$ 5,730.36	0
TL-041	1	Stoughton Trailer	1DW1B5324YS378020	2000	$ 6,360.00	$ 636.00	$ 2,724.00	19
TL-043	1	Belshe Equipment Trailer	16JF0142XA1045606	2010	$ 2,240.00	$ 224.00	$ 2,016.00	9
TL-044	1	Fruehauf FB	1H2P04820SW069130	1998	$ 2,805.00	$ 280.50	$ 2,524.50	21
TL-045	1	DIAMOND C ROADCLIPPER UT	46UFU1623J1204646	2018	$ 3,467.00	$ 346.70	$ 3,120.30	1
TL-046	1	TRAILMOBILE VAN TRAILER	LMN01JAH386002859	2000	$ 4,400.00	$ 440.00	$ 3,520.00	19
TL-047	1	HORTON TRAILER	5E2G2322861026316	2006	$ 1,000.00	$ 100.00	$ 800.00	13
TL-048	1	GREAT DANE 48 FT SPREAD AXLE FB	1GRDM96211M003413	2001	$ 5,525.00	$ 552.50	$ 4,420.00	18
TL-049	1	GREAT DANE 48 FT SPREAD AXLE FB	1GRDM96201M011518	2001	$ 5,525.00	$ 552.50	$ 4,420.00	18
TL-050	1	INTERSTATE 18DT TRAILER	1JK0DT204WA090052	1998	$ 1,369.00	$ 136.90	$ 1,095.20	21
TL-051	1	FRUE Trailer STORAGE ONLY	1H2V04822HA009136	1987	$ 2,000.00		$ -	32
TL-052	1	FRUE Trailer (Cali'sTrailer)	1H2V04824JE001733	1988	$ 2,000.00		$ -	31
TL-053	1	FRUE Trailer DECON	1H2V04821JB025733	1988	$ 2,000.00		$ -	31
TL-055	1	FRUE Trailer STORAGE ONLY NOT REGISTERED ERROR ON TITLE	1H5V04826KM074287	1989	$ 2,000.00		$ -	30
TL-057	1	Utility Semi Trailer / Flatbed	1UYFS2456RA122294	1994	$ 5,000.00	$ 500.00	$ 2,000.00	26
TL-058	1	Utility Trailer	1UYFS245XRA122248	1994	$ 5,000.00	$ 500.00	$ 2,000.00	26
TL-059	1	Utility Semi Trailer	1UYFS2458SA369421	1995	$ 5,000.00	$ 500.00	$ 2,000.00	25
TL-061	1	ANDERSON UTILITY TRAILER	4YNGN292X5C031318	2005	$ 4,300.00	$ 430.00	$ 2,150.00	15
TL-064	1	Continental Cargo Utility Trailer	5NHUNSZ22DU105881	2013	$ 7,500.00	$ 750.00	$ 3,000.00	6
TL-065	1	Texas Pride 22' Dump Trailer Gooseneck	7HCK2HGD0JB001200	2018	$ 18,000.00	$ 1,800.00	$ 14,400.00	2
TL-066	1	Stealth Ent Stealth - Enclosed	52LBE1626GE044276	2016	$ 7,488.00	$ 748.80	$ 4,492.80	4
TL-067	1	Load Trail CH18/CH16, 2 Stationary	4ZECH2028E1066845	2014	$ 4,356.77	$ 435.67	$ 2,178.42	5
TL-068	1	Utility Flat Bed	1UYFS2457SA369457	1995	$ 5,000.00	$ 500.00	$ 3,000.00	24
TL-070	1	Utility Flat Bed	1UYFS2452NA794508	1992	$ 5,000.00	$ 500.00	$ 3,000.00	27
TL-071	1	Dorsey Flat	1DTP86W23PP031271	1993	$ 3,300.00	$ 330.00	$ 1,980.00	26
TL-072	1	Great Dane Straight/Drop/Wedge/Open Top	1GRAA0629YS059841	2000	$ 6,000.00	$ 600.00	$ 3,000.00	19
TL-073	1	LEGEND GOOSENECK FROM PIS	5D3BG3225YE101067	2000	$ 6,000.00	$ 600.00	$ 3,000.00	19
TL-074	1	MDUSC Decon Trailer / SHOWER	41285MDU0038CN	1985	$ 9,700.00	$ 970.00	$ 5,820.00	34
TL-076	1	Fontaine Trailer	13N248407W1581081	1998	$ 2,000.00	$ 400.00	$ 1,600.00	21
TL-077	1	Fontaine Trailer	13N24830625912589	2002	$ 7,725.00	$ 772.50	$ 4,635.00	17
TL-078	1	Jen Utility Trailer	1J9DG3220XJ143102	1999	$ 5,500.00	$ 550.00	$ 4,400.00	20
TL-079	1	Butler Low Boy	1BUD4920521005910	2002	$ 11,473.00	$ 1,147.30	$ 9,178.40	17
TL-081	1	DYNA UT Trailor	4U161AEX611040371	2001	$ 4,004.00	$ 400.40	$ 2,402.40	18
TL-082	1	HOMEMADE 20 FT EQUIPMENT TRAILER	NOVIN0201144688	2014	$ 500.00	$ -	$ -	5
TL-083	1	2004 DORSEY TRAILER	1DTV115294A302235	2004	$ 8,000.00	$ 800.00	$ 4,800.00	15
TL-086	1	HPA MONON VAN TRAILER	1NNVA5325WM302013	1998	$ 1,105.19	$ 110.50	$ 994.69	22
TL-087	1	Blue Kaufman Trailer	5VGFS1621EL002365	2014	$ 3,300.00	$ 330.00	$ 2,640.00	5
TL-088	1	Sure Trac Equip. Trailer	5JWTU2020C1051816	2012	$ 2,900.00	$ 290.00	$ 1,740.00	7
TL-091	1	Utility 53' Van Trailer	1UYVS253X3G985001	2003	$ 1,000.00	$ -	$ 1,000.00	16
TL-096	1	Carry-On (Jimmy bought in OK)	4YMBU1820HY013167	2017	$ 3,190.00	$ 319.00	$ 2,233.00	3
TL-099	1	Stoughton Van Trailer	IDWIA5322B464385	2001	$ 3,000.00	$ 300.00	$ 2,100.00	18
TL-100	1	Eager Beaver FB RED	11200D301GT090113	1986	$ 5,000.00	$ 500.00	$ 3,500.00	33
TL-101	1	Fontaine 53' Step Deck Spread Axle	13N2512A391548227	2009	$ 9,363.75	$ -	$ 9,363.75	10
TL-103	1	BIG TEX Utility Trailer	16V1W2424L2098215	2020	$ 4,620.00	$ -	$ 4,620.00	0
TL-104	1	Rock Solid Cargo trailer	7H2BE1824LD019089	2020	$ 5,972.97	$ -	$ 5,972.97	0
TL-105	1	Carry On Car Hauler	4YMBU1821G052545	2020	$ 3,027.95	$ -	$ 3,027.95	0
TL-107	1	Bendron Titan Cargo Trailer	5UZBE1621FD032472	2015	$ 100.00		$ 100.00	0
TL-108	1	Big Foot Flatbed Trailer	4B9BF2427KM163924	2019				0
TL-109	1	Stoughton Van Trailer vin ...409341	1DW1A5321YS409341	2000				
TL-110	1	Diamond Cargo 8.5 X 24	53NBE2424M1088105	2021	$ 7,500.00	$ -	$ 7,500.00	0
TL-111	1	Carry On 6X12 Utility	4YMBU1219MG032075	2021	$ 2,211.66	$ -	$ 2,211.66	0
TL-112	1	BIGFOOT 7X24 EQUIP TRAILER V# 63040	4B9BF2429LM163040	2021	$ 5,118.42	$ -	$ 5,118.42	0
TL-113	1	Roadclipper Dump Trailer WDT216	46UFU202XM1246959	2021	$ 41,698.00	$ -	$ 41,698.00	0
TL-114	1	Quality Cargo Trailer 7X14 White	50ZZ1E421HN002510	2017		$ -		
TL-115	1	Bravo Trailer - New one James Caron	4B91X2028ND273013	2022		$ -		
TL-116	1	Ranger Decon Trailer 4 stall	1R9BS3726KG547131	2019	$ 49,900.00	$ -	$ 49,900.00	0
TL-117	1	Triple Crown ATV Trailer	1XNBE1625R1140553	2024	$ 3,919.60	$ -		0
TL-118	1	Rock Solid Cargo	7H2BE1229RD059394	2024	$ 6,111.68	$ -		0
TL-119	1	JC Utility Trailer Lowboy 20'	7N7J8DL25RC004967	2024	$ 5,999.76	$ -		0
TL-120	1	Load Trail GE282 Gooseneck	4ZEGE2827R1319318	2024	$ 12,140.00	$ -		0
TL-121	1	Transcraft (Trao) Eagle Sem	1TTF4820562015122	2006	$ 11,000.00	$ -		0
TL-122	1	Triple Crown 7X14 Dump Trailer	1XNBD1429R1143672	2024	$ 12,191.41	$ -		0
TL-123	1	Anvil Cargo Trailer 8.5X20 Gray	7FYBE2022SD034352	2025	$ 20,268.64	$ -		0
TL-124	1	RBJ GPS Utility Trailer 6x12	7PZBU1213RT008570	2024	$ 2,996.93	$ -	$ 2,996.93	0
TL-125	1	Wabash 53' Van Trailer	1JJV532D7CL735738	2012	$ 9,630.00	$ -	$ 9,630.00	0
TL-126	1	Wabash 53' Van Trailer	1JJV532DXCL735863	2012	$ 9,630.00	$ -	$ 9,630.00	0
TL-127	1	Spartan EV 8.5X24T5-R Silver	50XBE2427SA046975	2025	$ 12,374.49	$ -	$ 12,374.49	0
TL-128	1	Spartan EV 8.5X24T5-R Silver	50XBE2429SA046976	2025	$ 12,374.49	$ -	$ 12,374.49	0
TL-129	1	Lawrimore 83x20 EQ Trailer	5WUBU2022RF075284	2024	$ 7,268.00	$ -	$ 7,268.00	0
TL-130	1	Interstate 7X14 Cargo Trailer Silver	4RALS1422MN116377	2021	$ 8,025.00	$ -	$ 8,025.00	0
TL-131	1	Covered Wagon Trailer 8.5X20 White	53FBE202XSF099417	2025	$ 14,017.49	$ -	$ 14,017.49	0
TL-132	1	Tiger TX Portable Restroom T/A Trailer	7S3BY1820NC001103	2022	$ 4,548.80	$ -	$ 4,548.40	0
TL-133	1	NCFT 6X12 Cargo Silver	7PVBE1212SD917677	2025		$ -		0
TL-134	1	Covered Wagon Trailer CW8.5X18TA3 White	53FBE1820SF102873	2025		$ -		0
TL-135	1	Covered Wagon Dump Trailer 7X14 .099952 Gray	53FBN1424SF099952	2025	$ 12,000.00	$ -	$ 12,000.00	0
TL-136	1	2025 Nationcraft, LLC Cargo 8.5X24 .017338 Tan	7PVBC2420SD017338	2025	$ 12,000.00	$ -	$ 12,000.00	0
TL-137	1	Wabash 53' Van Trailer Air Ride	1JJV532D8CL728863	2012	$ 10,000.05	$ -	$ 10,000.05	0
TL-138	1	(RODR) Rodriguez 24'FB Utility Trailer	ROD24102082547	2025				
TL-139	1	BigTex 14PH-20BK-5MR	16V2F3124T6443069	2026				
TL-140	1	Transcraft 53' X 102 Drop Deck Beavertail w-ramps	1TTE532S1L3226868	2020				
TL-141	1	Rawmaxx Flat Deck Trailer	3EVBF2525S1124054	2025				

ITEM NO.	QTY	DESCRIPTION AND CAPACITY OF ITEMS	VIN NUMBER / SERIAL NUMBER	YEAR MFGD	PURCHASE PRICE	DEPRECIATED VALUE	CURRENT NET VALUE	AGE
TL-142	1	Utility 53' Van Trailer	1UYVS2533CP242812	2012				
TL-143	1	GPS 24' Dovetail Equipment Trailer .012182	7PZBE2425ST012182	2025				
TL-144	1	Road Runner 7X24' V-Nose Enclosed Silver	1Z9BV2422TF147662	2026				
ITEM NO.	QTY	DESCRIPTION AND CAPACITY OF ITEMS	VIN NUMBER / SERIAL NUMBER	YEAR MFGD	PURCHASE PRICE	DEPRECIATED VALUE	CURRENT NET VALUE	AGE
		LARGE EQUIPMENT						
EQ - 001	1	ACSI 20,000 CFM DUST COLLECTOR	1A9VSNU25P1247188	1993	$ 25,000.00	$ 23,750.00	$ 1,250.00	27
EQ - 002	1	ACSI 20,000 CFM DUST COLLECTOR	1A9VSNR28R1247313	1994	$ 25,000.00	$ 23,750.00	$ 1,250.00	26
EQ - 003	1	ARS Recycling S6 Super Unit 6 pot Recycler		2010	$ 295,000.00	$ 280,250.00	$ 14,750.00	9
	1	ITI TRAILER	1Z9SC4832AM310159		$ 5,000.00	$ 4,750.00	$ 250.00	
EQ - 004	1	ARS ARIES VAC B 4-POT 4000CFM		2012	$ 280,000.00	$ 266,000.00	$ 14,000.00	7
	1	ITI TRAILER	1Z9SC4535CM310311			$ -	$ -	
EQ - 006	1	ARS Recycling S6 Super Unit 6 pot Recycler	56451358SY300387	2013	$ 363,000.00	$ 344,850.00	$ 18,150.00	6
	1	ITI TRAILER / MODEL: SSD499650-50	1Z9SC4930DM310387		$ 17,000.00	$ 16,150.00	$ 850.00	
EQ - 007	1	ARS 45,000 CFM DUST COLLECTOR WINI		2012	$ 115,000.00	$ 109,250.00	$ 5,750.00	7
	1	ITI WINSTON TRAILER	1W9AP2305CH160102		$ 12,312.50	$ 11,696.88	$ 615.63	
EQ - 008	1	ARS 45,000 CFM DUST COLLECTOR	M14-031	2015	$ 112,585.90	$ 106,956.61	$ 5,629.30	4
	1	WINSTON DC45 TRAILER	1W9AP2305FH160010			$ -	$ -	
EQ-009	1	8 ton Schmidt blast pot-trailer mounted	Serial #732188	1990	$ 10,000.00	$ 9,500.00	$ 500.00	29
EQ-011	1	WANCO INC. ARROWBOARD	5F11S1019F1005180	2015	$ 6,500.00	$ 6,175.00	$ 325.00	4
EQ-013	1	WANCO INC. ARROWBOARD	5F11S1013G1005743	2015	$ 6,500.00	$ 6,175.00	$ 325.00	4
EQ-014	1	TEREX TH844C 8K FORKLIFT	045947	2004	$ 15,959.62	$ 15,161.64	$ 797.98	15
EQ-015	1	TEREX TH844C 8K FORKLIFT		2005	$ 17,766.38	$ 16,878.06	$ 888.32	14
EQ-016	1	TEREX TH844C 8K FORKLIFT	TH0805B 6625	2005	$ 15,959.62	$ 15,161.64	$ 797.98	14
EQ-017	1	NATIONAL SIGN INC. ARROWBOARD	IN9AK1014EF272469	2015	$ 6,500.00	$ 6,175.00	$ 325.00	4
EQ-020	1	NATIONAL SIGN INC. ARROWBOARD	IN9AK1018EF272474	2015	$ 6,500.00	$ 6,175.00	$ 325.00	4
EQ-021	1	Tisch TE-5170 VFC Air Sampler	1101	2017	$ 3,715.00	$ 3,529.25	$ 185.75	2
EQ-022	1	Tisch TE-5170 VFC Air Sampler	1012	2017	$ 3,715.00	$ 3,529.25	$ 185.75	2
EQ-023	1	Anderson HP 35 Hydra Platform Trailer Mounted	1H9US3332ES196398	2014	$ 156,550.00	$ 148,722.50	$ 7,827.50	5
EQ-024	1	Multi Quip DCA70SSIU4F 56KW Diesel Generator	S/N 7354210	2017	$ 34,000.00	$ 32,300.00	$ 1,700.00	2
EQ-026	1	Tisch TE-5170 VFC Air Sampler	2122	2017	$ 3,715.00	$ 3,529.25	$ 185.75	2
EQ-028	1	Tisch TE-5000 VFC Air Sampler	1000	2016	$ 3,715.00	$ 3,529.25	$ 185.75	3
EQ-029	1	Tisch TE-5028 Air Sampler Calibration Kit	3302	2017		$ -	$ -	2
EQ-030	1	Tisch TE-5007 VFC Air Sampler	5181	2014	$ 3,715.00	$ 3,529.25	$ 185.75	5
EQ-031	1	Mitsubishi FGC30 6k Warehouse Forklift	F83-00536		$ 3,200.00	$ 2,560.00	$ 640.00	
EQ-032	1	ARS Recycling S6 Super Unit 6 pot Recycler	M18-001	2018	$ 518,000.00	$ 103,600.00	$ 414,400.00	1
	1	ITI Trailer	1Z9SC4936JM310633				$ -	
EQ-033	1	Kubota RTVX 1120 Diesel	A5KF1GDBJEG016013	2014	$ 15,000.00	$ 2,250.00	$ 12,750.00	5
EQ-034	1	Putzmeister TK20 Concrete Pump	1P9AP1413HR330365	2018	$ 70,524.10	$ 10,578.62	$ 59,945.49	1
EQ-035	1	Airplaco Pumpmaster	Pump S/N 173306	2018	$ 17,235.00	$ 2,585.25	$ 14,649.75	1
EQ-036	1	Volvo Skidsteer MC110	#MC110P60013#	2004	$ 19,270.00	$ 15,416.00	$ 3,854.00	15
EQ-037	1	Niftylift TM 34 MG	SN:01-30365	2016	$ 11,900.00	$ 2,380.00	$ 9,520.00	3
EQ-038	1	Kubota SLV95-2SHFC Track Loader	39475	2018	$ 67,179.00	$ 10,076.85	$ 57,102.15	1
EQ-039	1	Kubota KX080-4SR3A Excavator	45313	2018	$ 98,778.00	$ 14,816.70	$ 83,961.30	1
EQ-040	1	JCB 535-140 8K 4X4 Ext. Reach Forklift	Engine s/n SH320/40532U1190713 Transm	2014	$ 52,247.70	$ 20,899.08	$ 31,348.62	5
EQ-041	1	John Deere 50ZTS Track Excavator	240334		$ 19,502.10	$ 9,751.05	$ 9,751.05	
EQ-042	1	Ingersoll Rand XP375 CFM Compressor Diesel	395375ULRB12		$ 19,000.00	$ 9,500.00	$ 9,500.00	
EQ-043	1	Ingersoll Rand XP375 CFM Compressor Diesel	372852UFQB12		$ 19,000.00	$ 9,500.00	$ 9,500.00	
EQ-044	1	Doosan C185 CFM Compressor Diesel	4668473ZYF23	2015	$ 10,950.00	$ 4,380.00	$ 6,570.00	4
EQ-045	1	Daewoo 030 Excavator Diesel Tracks					$ -	
EQ-046	1	Solar Tech Arrowboard	4GM1A0916J1529696	2018	$ 5,133.30	$ 770.00	$ 4,363.31	1
EQ-047	1	Solar Tech Arrowboard	4GM1A0918J1529697	2018	$ 5,133.30	$ 770.00	$ 4,363.31	1
EQ-049	1	Wacker Neuson Light Tower WNCLTV01EPUM03848	5XFLV0419JM003275	2018	$ 7,156.88	$ 1,073.53	$ 6,083.35	1
EQ-050	1	Wacker Neuson Light Tower WNCLTV01CPUM03843	5XFLV0414JM003278	2018	$ 7,156.88	$ 1,073.53	$ 6,083.35	1
EQ-051	1	Wacker Neuson Light Tower WNCLTV01HPUM03847	5XFLV0413JM003272	2018	$ 7,156.88	$ 1,073.53	$ 6,083.35	1
EQ-052	1	Wacker Neuson Light Tower WNCLTV01JPUM03839	5XFLV041XJM003270	2018	$ 7,156.88	$ 1,073.53	$ 6,083.35	1
EQ-053	1	Wacker Neuson Light Tower WNCLTV01JPUM03842	5XFLV0413JM003269	2018	$ 7,156.88	$ 1,073.53	$ 6,083.35	1
EQ-054	1	Wacker Neuson Light Tower WNCLTV01KPUM03838	5XFLV0411JM003268	2018	$ 7,156.88	$ 1,073.53	$ 6,083.35	1
EQ-055	1	Wacker Neuson Light Tower WNCLTV01LPUM03832	5XFLV0416JM003265	2018	$ 7,156.88	$ 1,073.53	$ 6,083.35	1
EQ-056	1	Wacker Neuson Light Tower WNCLTV01VPUM03844	5XFLV0410JM003259	2018	$ 7,156.88	$ 1,073.53	$ 6,083.35	1
EQ-057	1	Conex 8X20			$ 2,500.00	$ 2,250.00	$ 250.00	
EQ-058	1	Conex 8X20			$ 2,500.00	$ 2,250.00	$ 250.00	
EQ-059	1	Conex 8X20			$ 2,500.00	$ 2,250.00	$ 250.00	
EQ-060	1	Conex 8X20			$ 2,500.00	$ 2,250.00	$ 250.00	
EQ-061	1	John Deere Gator TX 4X2 2 seat side X side		2010	$ 10,000.00	$ 8,000.00	$ 2,000.00	9
EQ-062	1	Heat Wagon VG400 400K BTU Indirect Fired Heater 12V 1PH		2007			$ -	12
EQ-063	1	Heat Wagon VG400 400K BTU Indirect Fired Heater 12V 1PH		2007			$ -	12
EQ-064	1	PSC Message Board / Arrow Trailer mounted	1P91217192G301112	2002			$ -	18
EQ-065	1	Frost Fighter 350K Indirect Fired Heater		2014			$ -	5
EQ-066	1	Frost Fighter 350K Indirect Fired Heater		2014			$ -	5
EQ-067	1	Frost Fighter 350K Indirect Fired Heater		2014			$ -	5
EQ-070	1	Solar Tech Arrowboard	4GM1A0911J1529699	2018	$ 5,133.30	$ 770.00	$ 4,363.31	1
EQ-071	1	Husqvarna FS 3500 30" G Walk Behind Saw	1379418001	2019	$ 15,865.00	$ 1,586.50	$ 14,278.50	0
EQ-072	1	Anderson Hydra Platform HP35	1H9US33313C196211R	3- Remanufactured in 2	$ 80,000.00	$ 48,000.00	$ 32,000.00	0
EQ-073	1	Terex Bidwell 2450 Concrete Roller Paver	2450-2019-02	2019	$ 127,440.00	$ 12,744.00	$ 114,696.00	0
EQ-075	1	Anderson Hyfra Platform HP 35	S/N 1H9US3335JS196521	2019	$ 160,000.00	$ 16,000.00	$ 144,000.00	0
EQ-076	1	John Deere 333GXT Compact Track Loader	1T0333GMHKF349438	2019	$ 83,753.32	$ 8,375.33	$ 75,377.99	0
EQ-077	1	CASE 621G Full Size Wheel Loader	NJF246459	2019	$ 157,450.00	$ 15,745.00	$ 141,705.00	0
EQ-078	1	CASE CX145D Small Full Size Excavator	NKS7E1588	2019	$ 147,500.00	$ 14,750.00	$ 132,750.00	0
EQ-079	1	CASE CX245D Med. Full Size Excavator	NKS7K1257	2019	$ 205,500.00	$ 20,550.00	$ 184,950.00	0
EQ-080	1	Mecalac MRC6 Skid Excavator	MEC06MCRTH0120458	2017	$ 105,950.00	$ 10,595.00	$ 95,355.00	0
EQ-081	1	Tisch TE-5170 VFC Air Sampler		2019	$ 4,091.80	$ 409.18	$ 3,682.62	0

ITEM NO.	QTY	DESCRIPTION AND CAPACITY OF ITEMS	VIN NUMBER / SERIAL NUMBER	YEAR MFGD	PURCHASE PRICE	DEPRECIATED VALUE	CURRENT NET VALUE	AGE
EQ-082	1	Tisch TE-5170 VFC Air Sampler		2019	$ 4,091.80	$ 409.18	$ 3,682.62	0
EQ-083	1	Putzmiester Thom Katt TK40 Concrete Pump	S/N2106T4857 Vin. 1P9AP1619JR330857	2018	$ 66,900.00		$ 66,900.00	0
EQ-084	1	Case 921G Wheel Front End Loader, 5yd bucket,72" forks, root rake	NJF246475	2019			$ -	
EQ-085	1	Solar Technology, Inc. Silent Messenger Message Board	4GM2M1511K1415338	2019	$ 16,600.00		$ 16,600.00	0
EQ-086	1	Solar Technology, Inc. Silent Messenger Message Board	4GM2M1513K1415339	2019	$ 16,600.00		$ 16,600.00	0
EQ-087	1	Solar Technology, Inc. Silent Messenger Message Board	4GM2M1514K1415463	2019	$ 16,600.00		$ 16,600.00	0
EQ-088	1	Solar Technology, Inc. Silent Messenger Message Board	4GM2M1516K1415464	2019	$ 16,600.00		$ 16,600.00	0
EQ-089	1	Case Compact Excavator CX55B	S/N NGTN56096	2016	$ 54,544.32		$ 54,544.32	
EQ-090	1	Sullivan 185 CFM Compressor	D185PDZSB	2016	$ 13,500.00	$ 4,050.00	$ 9,450.00	
EQ-093	1	Altlas Copco XAS 185 CFM Compressor	4500A1018AR	2010	$ 11,500.00	$ 6,900.00	$ 4,600.00	
EQ-095	1	Allen 28' Triple Roller Tube Pavers TRTP150B	S/N 512969-TT150B	2012			$ -	
EQ-096	1	Kubota SVL75-2 Hi Flow Cab & Hyd Cplr Skid Steer, forks, 74" bucket	S/N KBCC0752TK1K47148	2020	$ 59,714.00	$ -	$ 59,714.00	0
EQ-097	1	Kubota SVL75-2 Hi Flow Cab & Hyd Cplr Skid Steer, forks, 74" bucket	S/N 46193	2020	$ 59,714.00	$ -	$ 59,714.00	0
EQ-098	1	Solar Technology, Inc. Silent Messenger Message Board	4GM2M1511K1415825	2019	$ 16,600.00	$ -	$ 16,600.00	0
EQ-099	1	Solar Technology, Inc. Silent Messenger Message Board	4GM2M1518K1415692	2019	$ 16,600.00	$ -	$ 16,600.00	0
EQ-100	1	Case 850M Bull Dozer	NKC103769	2019	$ 155,430.00	$ -	$ 155,430.00	0
EQ-101	1	JLG 34' W/ JIB Articulating Manlift 340AJ Diesel	s/n 300247198	2018	$ 40,910.00	$ -	$ 40,910.00	0
EQ-102	1	JLG 45' w/JIB 4wd Articulating manlift 450AJ Diesel	s/n 0300219746	2016	$ 40,157.00	$ -	$ 40,157.00	0
EQ-103	1	JLG 45' w/JIB 4wd Articulating manlift 450AJ Diesel	s/n 0300161525	2012	$ 28,127.00	$ -	$ 28,127.00	0
EQ-104	1	JLG 45' w/JIB 4wd Articulating manlift 450AJ Diesel	s/n 0300178100	2013	$ 30,806.00	$ -	$ 30,806.00	0
EQ-105	1	2018 TerraMac RT-14R Crawler Carrier	s/n 14RG0076	2018	$ 193,699.69	$ -	$ 193,699.69	0
EQ-106	1	My Casa 8X20 Storage Conex	N/A	2018	$ 2,900.00	$ -	$ 2,900.00	0
EQ-107	1	Entech 45DC Dust Collector Lot 299-1 Semi OK	1E9FF4727FN195002	2015	$ 95,000.00	$ -	$ 95,000.00	0
EQ-109	1	Entech 45DC Dust Collector Lot 299-1 Semi OK	1E9FP 3829DN195005	2013	$ 60,000.00	$ -	$ 60,000.00	0
EQ-113	1	Anderson Hydra Platform HP32 - Air Brakes	1H9US33364N196212	2004	$ 80,000.00	$ -	$ 80,000.00	0
EQ-114	1	Anderson Hydra Platform HP35 - Air Brakes	1H9US33384N196213	2004	$ 80,000.00	$ -	$ 80,000.00	0
EQ-115	1	Bobcat T870 T4 CompactTrack Loader	B47C18941	2021	$ 106,160.00	$ -	$ 106,160.00	0
EQ-116	1	Sullair 1600 CFM Compressor	200806260074	2008	$ 85,000.00	$ -	$ 85,000.00	0
EQ-117	1	Sullair 1600 CFM Compressor	201402260038	2014	$ 125,000.00	$ -	$ 125,000.00	0
EQ-118	1	Case Excavator CX145D SR	DAC145K7NMS7E2174	2021	$ 165,500.00	$ -	$ 165,500.00	0
EQ-119	1	Case Midi Ex CX80C	NMS6B2710	2021	$ 121,500.00	$ -	$ 121,500.00	0
EQ-120	1	Case Midi Ex CX80C	DAC080K6NLS6B2457	2021	$ 113,500.00	$ -	$ 113,500.00	0
EQ-121	1	Wacker Neuson G25 Generator Standard T4 (2in ball)		2022	$ 27,463.80	$ -	$ 27,463.80	0
EQ-122	1	Wacker Neuson TH627 Telehandler w-forks & bucket	418020232	2016	$ 71,799.00	$ -	$ 71,799.00	0
EQ-123	1	Wacker Neuson ST45 Skid Steer Tracks w-forks & bucket	WNCS0404JPAL00270	2016	$ 45,689.28	$ -	$ 45,689.28	0
EQ-124	1	Wacker Neuson WL60T Telescopic Wheel Loader	3033044	2016	$ 51,209.34	$ -	$ 51,209.34	0
EQ-125	1	Husqvarna FS 520 20" Walk Behind Saw	967045902	2019	$ 6,638.00	$ -	$ 6,638.00	0
EQ-126	1	Doosan (Ingersoll Rand) 185 CFM Compressor	413222UDUD75	2010		$ -		0
EQ-127	1	Tisch TE-5028 Calibration Kit (2 slack tubes)	S/N 4107 Rootsmeter S/N 438320	2022	$ 1,595.64	$ -	$1,595.64	0
EQ-128	1	John Deere Gator TX 4X2 sideXside w-Dumpbed	1M04X2XDADM081427	2013	$ 4,995.00	$ -	$4,995.00	0
EQ-129	1	CASE CX250D Long Reach Excavator	NJS7M1319	2018	$ 199,860.00	$ -	$199,680.00	0
EQ-130	1	Polaris Ranger 900 2dr 4X4	4XAJT87AOCB442768	2023	$ 5,500.00	$ -	$5,500.00	0
EQ-131	1	CAT 259D3 Compact Skid Steer Track Loader,928347	CAT0259DLCW928347	2023	$ 44,567.50	$ -	$44,567.50	0
EQ-132	1	Hydraulic Vibratory Driver / Extractor - Pile Hammer	Model ICE 7E s/n V7E953		$ 74,248.00	$ -	$74,248.00	0
EQ-133	1	AGT LRT23 Stand On Mini Loader Skid Steer	CZLRT2324041900312	2024	$ 6,289.10	$ -	$6,289.10	0
EQ-134	1	VacMaster 23T Tier 4 Vacuum - trailer mounted	V7210014	2025	$ 225,016.80	$ -	$225,016.80	0
		on MVT20 Behnke Trailer	4L5ST2032SF072768	2025		$ -		0
EQ-135	1	Marco Air Dryer Pneu 1600 CFM	M95D-218	2025	$ 27,096.54	$ -	$27,096.54	0
EQ-136	1	Industrial Vacuum DC 20	1D9D3UA25FW048001Z	2015	$ 45,000.00	$ -	$45,000.00	0
EQ-137	1	Axxiom Schmidt Air Dryer System 1600CFM			$ 23,735.00	$ -	$23,735.00	0
EQ-138	1	SMC 2000 Full Matrix Message Board LHF-STF-0147	7L31CA215RG000721	2024	$ 17,066.00	$ -	$17,066.00	0
EQ-139	1	SMC 2000 Full Matrix Message Board LHF-STF-0170	7L31CA21XRG000875	2024	$ 17,066.00	$ -	$17,066.00	0
EQ-140	1	SMC 2000 Full Matrix Message Board LHF-STF-0302	7L31H8215RG000941	2024	$ 17,066.00	$ -	$17,066.00	0
EQ-141	1	M90 EZ 15-Light Arrow Board HSG-A24-0324	7L31E721XSG000229	2024	$ 4,452.00	$ -	$4,452.00	0
EQ-142	1	M90 EZ 15-Light Arrow Board HSG-A24-0325	7L31E7216SG000230	2024	$ 4,452.00	$ -	$4,452.00	0
EQ-143	1	Toyota 8FGU25 5000lb Warehouse Forklift	8FGU25-76025	2016	$ 14,816.25	$ -	$14,816.25	0
EQ-144	1	Pake Handling Electric Scissor Lift 22' 660lb cap - PAKSL-SJY0358	S202505017	2025	$ 5,712.00	$ -	$5,712.00	0
EQ-145	1	Takeuchi TB210R Mini Excavator	211006255	2021	$ 16,971.50	$ -	$ 16,971.50	0
EQ-146	1	Atlas Copco QAS 175 Generator	ESF506834	2022	$ 70,997.16	$ -	$70,997.16	0
EQ-147	1	Bobcat Light Tower PL65WKBT-60HZ-T4	520102UFAJK80	2025	$ 14,426.00	$ -	$14,426.00	0
EQ-148	1	Bobcat Light Tower PL65WKBT-60HZ-T5	520103UFAJK80	2025	$ 14,426.00	$ -	$14,426.00	0
EQ-149	1	Doosan Light Tower LED LCVWKUB-T4F	513774UIAHG78	2023	$ 13,549.00	$ -	$13,549.00	0
EQ-150	1	Doosan Light Tower LED LCVWKUB-T4F	513768UIAHG78	2023	$ 13,549.00	$ -	$13,549.00	0
EQ-151	1	Vermeer Vacuum V800G Trailer	1M9FE1229DS284154	2013	$ 35,546.20	$ -	$35,546.20	0
		SMALL EQUIPMENT						
	1	Saw, Cut-Off 14" Gas Model: TS420-14	Serial#179212290	2014	$ 1,139.94	$ 113.99	$ 1,025.95	1
	6	Concrete Saw Husqvarna Gas	N/A	2018	$ 5,370.00	$ 537.00	$ 4,833.00	2
	2	Concrete Saw Stihl Gas	N/A	2018	$ 1,600.00	$ 160.00	$ 1,440.00	2
SE-003	1	MHTA-2 Manuel Highway Tape Applicator						
SE-005	1	Prism Inflatable 1000W metal halide Ballon Lights -Honda Eu2200i generator	EAMT-1314069	2019				
SE-006	1	Prism Inflatable 1000W metal halide Ballon Lights -Honda Eu2200i generator	EAMT-1314070	2019				
SE-007	1	Prism Inflatable 1000W metal halide Ballon Lights -Honda Eu2200i generator	EAMT-1314071	2019				
SE-008	1	Prism Inflatable 1000W metal halide Ballon Lights -Honda Eu2200i generator	EAMT-1314072	2019				
SE-009	1	Prism Inflatable 1000W metal halide Ballon Lights -Honda Eu2200i generator	EAMT-1314073	2019				
SE-010	1	Prism Inflatable 1000W metal halide Ballon Lights -Honda Eu2200i generator	EAMT-1314074	2019				
SE-011	1	Prism Inflatable 1000W metal halide Ballon Lights -Honda Eu2200i generator	EAMT-1314075	2019				
SE-012	1	Prism Inflatable 1000W metal halide Ballon Lights -Honda Eu2200i generator	EAMT-1314076	2019				
SE-013	1	Prism Inflatable 1000W metal halide Ballon Lights -Honda Eu2200i generator	EAMT-1314077	2019				
SE-014	1	Prism Inflatable 1000W metal halide Ballon Lights -Honda Eu2200i generator	EAMT-1314078	2019				
SE-015	1	Prism Inflatable 1000W metal halide Ballon Lights -Honda Eu2200i generator	EAMT-1314079	2019				
SE-016	1	Prism Inflatable 1000W metal halide Ballon Lights -Honda Eu2200i generator	EAMT-1314080	2019				
SE-017	1	Prism Inflatable 1000W metal halide Ballon Lights -Honda Eu2200i generator	EAMT-1355851	2019				
SE-018	1	Prism Inflatable 1000W metal halide Ballon Lights -Honda Eu2200i generator	EAMT-1355854	2019				
SE-019	1	Prism Inflatable 1000W metal halide Ballon Lights -Honda Eu2200i generator	EAMT-1355860	2019				
SE-020	1	Schmidt 300# Abraisive blaster Model SI861863902 W/ hose	18L-4985	2015				
SE-021	1	International 300#vAbraisive Blaster Model SI-8618-639-01 W /hose	211848	2004				

ITEM NO.	QTY	DESCRIPTION AND CAPACITY OF ITEMS	VIN NUMBER / SERIAL NUMBER	YEAR MFGD	PURCHASE PRICE	DEPRECIATED VALUE	CURRENT NET VALUE	AGE
SE-022	1	Stihl 14" Cut Off Saw TS420 Gas	185796715	2020				
SE-023	1	Stihl 14" Cut Off Saw TS420 Gas	185605223	2015				
SE-024	1	Hobart Champion Elite 225 243759 Welder/Generator	NC031017R	2023				
SE-025	1	Easy Kleen IS7040G 7000PSI Pressure Washer Cold	1528312	2015				
SE-026	1	Stihl 14" Cut Off Saw TS420 Gas	190814652					
SE-027	1	Pirate Brand 3.5 CU FT Blast Pot	303475	2005				
SE-028	1	Generac Generator GP6500 G0076802	3007809181	2021				
SE-029	1	Easy Kleen IS7040G 7000PSI Pressure Washer Cold	2114361					
SE-030	1	Easy Kleen Magnum Gold 4000PSI Pressure Washer HOT	9874566123	2022				
SE-031	1	Easy Kleen Magnum Gold 4000PSI Pressure Washer HOT		2022				
SE-032	1	Wel-Co Metallurgical Corporation Core Drill	SN-01042 - Dewalt Motor SN-010902					
SE-033	1	HG Adhesive Dispensing Black Bear		2022				
SE-034	1	Vulcan OmniPro 220 MIG Welder	37503182022	2022				
SE-035	1	Pirate Brand 3.5 CU FT Blast Pot, w/Lid 18"& Screen 18"	#0121	2024	$ 5,656.91		$ 5,656.91	0
		Misc Tools, Hoses, Nozzles, Cables, Rigging Equipment., etc	N/A	N/A	$ 200,000.00		$ 200,000.00	N/A
		Safety equipment / Fall protection	N/A		$ 20,000.00	$ 2,000.00	$ 18,000.00	2
		Traffic Control Devices	N/A	2019	$ 25,000.00	$ 1,200.00	$ 23,800.00	1
	20	Steel Grit New - Barrels	N/A	2020	$ 13,000.00		$ 13,000.00	0
	100	Grit / Re-Cycle - Barrels	N/A	2019-2020	$ 45,000.00		$ 45,000.00	0
	12	WIWA Paint Pump 64/1 @ $4385.93 each	N/A	2016-2020	$ 52,631.16	$ 5,263.11	$ 42,104.94	3
	4	Graco Extreme X30 Paint Pump 60/1	N/A	2013	$ 1,500.00	$ 150.00	$ 1,350.00	2
	12	Generator assorted sizes	N/A	2018-2020	$ 7,500.00		$ 7,500.00	1
	51	20"X16' Aluminum Scaffolds	N/A	2018	$ 10,180.00	$ 1,527.00	$ 8,653.00	1
	12	12"X20' Aluminum Sxcaffolds	N/A	2018	$ 4,840.00	$ 726.00	$ 4,114.00	1
	4	20"X24' Aluminum Scaffolds	N/A	2018	$ 2,166.53	$ 324.98	$ 1,841.55	1
	6	20"X32' Aluminum Scaffolds	N/A	2018	$ 4,379.00	$ 656.85	$ 3,722.15	1
	12	24"X24' Aluminum Scaffolds	N/A	2019	$ 15,540.00	$ 2,331.00	$ 13,209.00	1
	3	Aluminum 16' Extension Ladders	N/A	2013	$ 170.00	$ 17.00	$ 153.00	2
	2	Aluminum 8' Extension Ladders	N/A	2014	$ 120.00	$ 12.00	$ 108.00	1
	1	Aluminum 32' Extension Ladder	N/A	2014	$ 360.00	$ 36.00	$ 324.00	1
	4	Sky Climber Motors	N/A	2013	$ 500.00	$ 50.00	$ 450.00	2
	12	Safety Yo Yo's with Harness	N/A	2014-2020	$ 4,080.00	$ -	$ 4,080.00	0
	50	Safety Harness's with Laynards	N/A	2019-2020	$ 6,250.00	N/A	$ 6,050.00	N/A
	12	100' Extension Cords 14/2 Gauge	N/A	2019	$ 720.00	$ 72.00	$ 648.00	1
	1	Complete Repair Air Coupling Box Set	N/A	2014	$ 120.00	$ 12.00	$ 108.00	1
	200	Tie Down Straps 4 inch ratchet	N/A	2018-2020	$ 10,000.00	$ 1,000.00	$ 9,000.00	1
	18	Heavy Duty Snatch Blocks	N/A	2014	$ 3,960.00	$ 396.00	$ 3,564.00	1
	250	12' Chains with Hooks	N/A	2018	$ 7,500.00	$ 750.00	$ 6,750.00	1
	12	Battery Charger	N/A	2018	$ 270.00	$ 27.00	$ 243.00	2
	6	Palett Jack	N/A	2018	$ 720.00	$ 72.00	$ 576.00	2
	5	Barrell Dolly	N/A	2014	$ 600.00	$ 60.00	$ 540.00	1
	5	Banding Macines	N/A					
	1	Drum Cart	N/A	2014	$ 185.00	$ 18.50	$ 166.50	1
	1	Mixer Mortar 9 CubicFeet	Serial#G1459257 / Model: WM90PH8	2015	$ 2,593.00	$ 259.30	$ 2,333.70	0
	4	Marco - Blastmaster 2.0 L-Series 100lb pots	N/A	2019	$ 6,310.02	$ -	$ 6,310.02	0
	2	Marco - 10 cu Blast Pot 2 nozzle	N/A	2019	$ 6,069.25	$ -	$ 6,069.25	0
	1	Blast Pot- Green Clemco	Model#23063	2015	$ 2,200.00	$ 220.00	$ 1,980.00	0
	2	Blast Pot- BlueClemco	Model#2452	2015	$ 4,400.00	$ 440.00	$ 3,960.00	0
	12	Air Tree / Manifold Marco / Barricade / Bullard	N/A	2018-2020	$ 4,650.00	$ 465.00	$ 4,185.00	0
	1	Manifold for by-pass pumping	Serial#400420043	2014	$ 3,424.00	$ 375.00	$ 3,049.00	1
	1	5.5 HP Diaphram Test Pump	Serial#1406930	2014	$ 2,243.26	$ 250.00	$ 1,993.26	1
		Fence	N/A	N/A	$ 100,000.00		$ 100,000.00	
		Safe Span	N/A	N/A	$ 250,000.00		$ 250,000.00	
	1	TopCon Laser Level RL-H5A	1P059657	2019	$ 645.00	$ -	$ 645.00	0
	1	Lazor	N/A	2014	$ 2,750.00	$ 300.00	$ 2,450.00	1
	10	Assorted Pressure washers - cold		2019	$ 4,678.90	$ 46.78	$ 4,632.12	1
	1	Dyna GLO Pro 30,000 - Space Heater	N/A	2015	$ 410.00	$ 41.00	$ 369.00	0
	1	Dyna GLO 12,000 BTU Heater	Serial#0338030045/ZT	2013	$ 524.29	$ 52.42	$ 471.87	2
	1	Heat-Master 135,000 BTU	Serial#MH-135T-KFA	2015	$ 350.00	$ 35.00	$ 315.00	0
	2	Master Pro 125,000 BTU Space Heater	N/A	2014	$ 570.00	$ 57.00	$ 513.00	1
	1	Air Hose - 1200 PSI Iron Horse	N/A	2014	$ 482.57	$ 55.00	$ 427.57	1
	20	Computers / Software - Other	N/A	2019-2020	$ 50,000.00		$ 50,000.00	0
	10	Furniture and Office Equipment	N/A	2018-2020	$ 15,000.00	$ 119.23	$ 14,880.77	2
	12	Needle Guns	N/A	N/A	$ 1,350.00	$ 135.00	$ 1,215.00	N/A
	3	23 MM Bristle Blasters	N/A	2019	$ 3,750.00	$ 375.00	$ 3,375.00	1
		Small Power Tools Drills- grinders, regular. hammer, rotary etc. w/ Chargers	N/A	2019/2020	$ 25,000.00		$ 25,000.00	0
		Small Hand Tools (Wrenches, Sockets, Screw drivers, Shovels,Trowels etc.)	N/A		$ 29,690.26	$ 2,969.02	$ 26,721.24	N/A
		Inspection Equipment Name	**Serial Number**					
	1	PCE Concrete Rebound Test Hammer PCE-HT-225A	S#71101	2019	$ 640.00		$ 640.00	0
	1	BYK a200 Anemometer	180825563	6/18/2020	$ 164.00			
	1	Sper Scientific	AE64289/33775	N/A	$ 916.00			
	1	Reed LM-8000	Q798473/34213	N/A	$ 159.00			
	1	Reed LM-81AM	Q946719/34212	N/A	$ 89.00			
	1	EXTECH Anemometer	222234	N/A	$ 219.99			
	1	Bacharach Sling Psychrometer	33132	2/7/2021	$ 106.50			
	1	Bacharach Sling Psychrometer	27261	2/7/2021	$ 106.50			
	1	Bacharach Sling Psychrometer	28791	11/9/2018	$ 106.50			
	1	Bacharach Sling Psychrometer	34989	6/29/2024	$ 106.50			
	1	Bacharach Sling Psychrometer	37527	2/23/2024	$ 106.50			
	1	Bacharach Sling Psychrometer	38716	8/15/2020	$ 106.50			
	1	Bacharach Sling Psychrometer	33874	9/26/2020	$ 106.50			

ITEM NO.	QTY	DESCRIPTION AND CAPACITY OF ITEMS	VIN NUMBER / SERIAL NUMBER	YEAR MFGD	PURCHASE PRICE	DEPRECIATED VALUE	CURRENT NET VALUE	AGE
	1	Bacharach Sling Psychrometer	33875	9/26/2020	$ 106.50			
	1	Bacharach Sling Psychrometer	33876	5/20/2023	$ 106.50			
	1	Bacharach Sling Psychrometer	40103	1/21/2021	$ 106.50			
	1	Bacharach Sling Psychrometer	33135	1/21/2021	$ 106.50			
	1	Bacharach Sling Psychrometer	42772	6/18/2020	$ 106.50			
	1	Bacharach Sling Psychrometer	70661	5/20/2023	$ 106.50			
	1	Barricade CO Monitor	A333-4053					
	1	Barricade CO Monitor	A222-3545					
	1	Barricade CO Monitor	A222-3439					
	1	CO Monitor Calibration Kit	SRB#1	2/23/2023				
	1	CO Monitor Calibration Kit	SRB#2	2/23/2023				
	1	CO Monitor Calibration Kit	SRB#3	6/3/2022				
	1	Gillian BDX II Personal Air Sampler	20190501010	2/13/2024				
	1	Gillian BDX II Personal Air Sampler	20190501008	2/13/2024				
	1	Hanna HI conductivity meter	10864	1/21/2021	$ 399.00			
	1	Hedon Soluble Salt Meter	110140004	12/18/2020	$ 5,975.00			
	1	Hedon Soluble Salt Meter	130017-009	6/15/2023	$ 5,975.00			
	1	Hedon Soluble Salt Meter	130068003/RPCT-07-001	2/10/2021	$ 5,975.00			
	1	Hypodermic Needle Pressure Gauge						
	1	IR Laser 800	155337713	N/A				
	1	IR Intertek	3080912	N/A				
	1	IR Thermometer Extech	30903	1/21/2021	$ 135.95			
	1	IR Thermometer Enno Logic	34244	1/21/2021	$ 84.99			
	1	IR Thermometer Fluke 62 Max	32914	3/5/2020	$ 114.99			
	1	IR Thermometer Fluke 62 Max	31456	2/7/2021	$ 114.99			
	1	IR Thermometer Fluke 62 Max	20421	2/7/2021	$ 114.99			
	1	IR Thermometer Fluke 62 Max	41203	2/7/2021	$ 114.99			
	1	IR Thermometer Fluke 62 Max	29197	3/5/2020	$ 114.99			
	1	IR Thermometer Master Cool	34245	1/21/2021	$ 136.22			
	1	URCERI Lightmeter	34336	N/A	$ 41.99			
	1	Lightmeter #CA811	34211	N/A	$ 126.00			
	1	Light Meter Extech	150706758	7/10/2020	$ 217.00			
	1	KTA Nozzle Pressure Orifice Gauge	65108952018					
	1	Reed LM-81LX	Q908708/34214	N/A	$ 91.67			
	1	Positector Gage 6000 F	32913	3/4/2020	$ 680.00			
	1	Positector 6000 F Probe	254103	1/21/2021	$ 345.00			
	1	Positector 6000 F Probe	351203	1/21/2021	$ 345.00			
	1	Positector 6000 F Probe	355741	5/20/2023	$ 345.00			
	1	Positector 6000 F Probe	270656	8/15/2020	$ 345.00			
	1	Positector 6000 FN Probe	284790	1/21/2021	$ 1,390.00			
	1	Positector 6000 FN Probe	251657	9/26/2020	$ 1,390.00			
	1	Positector 6000 FN Probe	306472	2/7/2021	$ 1,390.00			
	1	Positector 6000 FN Probe	368766	3/9/2023	$ 1,390.00			
	1	Positector 6000 FS Probe	361220	1/21/2021	$ 445.00			
	1	Positector 6000 FS Probe	368900	5/20/2023	$ 445.00			
	1	Positector 6000 FNS Probe	307433	3/5/2020	$ 915.00			
	1	Positector 6000 FNS Probe	240202	8/15/2020	$ 915.00			
	1	Positector 6000 SPG Probe	307433	3/5/2020	$ 365.00			
	1	Positector 6000 SPG Probe	314939	3/5/2020	$ 365.00			
	1	Positector 6000 DPM Probe	353195		$ 395.00			
	1	Positector 6000 DPM Probe	319127	11/9/2018	$ 395.00			
	1	Positector 6000 DPM Probe	341682		$ 395.00			
	1	Positector 6000 DPM Probe	340797	3/22/2023	$ 395.00			
	1	Positector 6000 DPM Probe	270582		$ 395.00			
	1	Positector 6000 Advanced Body	27086	No Calib. Needed	$ 680.00			
	1	Positector 6000 Advanced Body	42612	No Calib. Needed	$ 680.00			
	1	Positector 6000 Advanced Body	41221	No Calib. Needed	$ 680.00			
	1	Positector 6000 Advanced Body	42507	No Calib. Needed	$ 680.00			
	1	Positector 6000 Advanced Body	32913	No Calib. Needed	$ 680.00			
	1	Positector 6000 Advanced Body	29144	No Calib. Needed	$ 680.00			
	1	Positector 6000 Standard Body	283811	No Calib. Needed	$ 560.00			
	1	Positector 6000 Standard Body	35565	No Calib. Needed	$ 560.00			
	1	Positector 6000 Standard Body	41662	No Calib. Needed	$ 560.00			
	1	Positector 6000 Standard Body	40373	No Calib. Needed	$ 560.00			
	1	Positector 6000 Standard Body	12657	No Calib. Needed	$ 560.00			
	1	Positector 6000 Standard Body	17490	No Calib. Needed	$ 560.00			
	1	Positector 6000 Standard Body	17489	No Calib. Needed	$ 560.00			
	1	Positest at Manual Pull of Adhesion Tester	N/A	2014	$ 1,895.00	$ 200.00	$ 695.00	6
	1	PTC 315 Surface Thermometer	23551	9/26/2020	$ 48.00			
	1	PTC 315 Surface Thermometer	43964	2/7/2021	$ 48.00			
	1	PTC 315 Surface Thermometer	29776	2/7/2021	$ 48.00			
	1	PTC 315 Surface Thermometer	42967	6/18/2020	$ 48.00			
	1	PTC 315 Surface Thermometer	28998	3/5/2020	$ 48.00			
	1	PTC 315 Surface Thermometer	28997	3/5/2020	$ 48.00			
	1	PTC 315 Surface Thermometer	42688	5/22/2020	$ 48.00			
	1	PTC 315 Surface Thermometer	20307	1/21/2021	$ 48.00			
	1	Taylor Paint Thermometer	16950	6/30/2020	$ 100.00			
	1	Taylor Paint Thermometer	42725	2/7/2021	$ 100.00			
	1	Taylor Paint Thermometer	16951	1/21/2021	$ 100.00			
	1	Taylor Paint Thermometer	42726	9/15/2023	$ 100.00			
	1	Testex Spring Micrometer	16950	9/26/2020	$ 213.00			
	1	Testex Spring Micrometer	42760	5/20/2023	$ 213.00			
	1	Testex Spring Micrometer	29119	2/23/2024	$ 213.00			
	1	Testex Spring Micrometer	16657	1/21/2021	$ 213.00			
	1	Testex Spring Micrometer	18256	1/21/2021	$ 213.00			

ITEM NO.	QTY	DESCRIPTION AND CAPACITY OF ITEMS	VIN NUMBER / SERIAL NUMBER	YEAR MFGD	PURCHASE PRICE	DEPRECIATED VALUE	CURRENT NET VALUE	AGE
	1	Testex Spring Micrometer	41723	1/21/2021	$ 213.00			
	1	Testex Spring Micrometer	18256	1/21/2021	$ 213.00			
	1	Testex Spring Micrometer	21943	1/21/2021	$ 213.00			
	1	Testex Spring Micrometer	20035	1/21/2021	$ 213.00			
	1	Testex Spring Micrometer	2549	1/21/2021	$ 213.00			
	1	Testex Spring Micrometer	29597	3/4/2020	$ 213.00			
	1	Testex Spring Micrometer	30243	2/7/2021	$ 213.00			
	1	Testex Spring Micrometer	2550	2/7/2021	$ 213.00			
	1	Testex Spring Micrometer	2548	8/15/2020	$ 213.00			

SOUTHERN ROAD & BRIDGE, LLC

PALM HARBOR, FLORIDA

FINANCIAL STATEMENTS

DECEMBER 31, 2025

SOUTHERN ROAD & BRIDGE, LLC

PALM HARBOR, FLORIDA

FINANCIAL STATEMENTS

DECEMBER 31, 2025

CONTENTS

	PAGE
Independent Auditors' Report	1
Balance Sheet	3
Statement of Income and Changes in Members' Equity	4
Statement of Cash Flows	5
Notes to Financial Statements	6
Supplementary Information:	
Schedule of Earnings from Contracts	16
Schedule of Contracts Completed	17
Schedule of Contracts in Progress	18
Schedule of General and Administrative Expenses	19

INDEPENDENT AUDITORS' REPORT

To the Members
Southern Road & Bridge, LLC
Palm Harbor, Florida

Opinion

We have audited the accompanying financial statements of Southern Road & Bridge, LLC (the "Company"), which comprise the balance sheet as of December 31, 2025, and the related statements of income and changes in members' equity, and cash flows for the year then ended, and the related notes to the financial statements.

In our opinion, the financial statements referred to above present fairly, in all material respects, the financial position of Southern Road & Bridge, LLC as of December 31, 2025, and the results of its operations and its cash flows for the year then ended in accordance with accounting principles generally accepted in the United States of America.

Basis for Opinion

We conducted our audit in accordance with auditing standards generally accepted in the United States of America. Our responsibilities under those standards are further described in the Auditor's Responsibilities for the Audit of the Financial Statements section of our report. We are required to be independent of Southern Road & Bridge, LLC and to meet our other ethical responsibilities in accordance with the relevant ethical requirements relating to our audit. We believe that the audit evidence we have obtained is sufficient and appropriate to provide a basis for our audit opinion.

Responsibilities of Management for the Financial Statements

Management is responsible for the preparation and fair presentation of the financial statements in accordance with accounting principles generally accepted in the United States of America, and for the design, implementation, and maintenance of internal control relevant to the preparation and fair presentation of financial statements that are free from material misstatement, whether due to fraud or error.

In preparing the financial statements, management is required to evaluate whether there are conditions or events, considered in the aggregate, that raise substantial doubt about Southern Road & Bridge, LLC's ability to continue as a going concern within one year after the date that the financial statements are available to be issued.

Auditor's Responsibilities for the Audit of the Financial Statements

Our objectives are to obtain reasonable assurance about whether the financial statements as a whole are free from material misstatement, whether due to fraud or error, and to issue an auditor's report that includes our opinion. Reasonable assurance is a high level of assurance but is not absolute assurance and therefore is not a guarantee that an audit conducted in accordance with generally accepted auditing standards will always detect a material misstatement when it exists.

To the Members
Southern Road & Bridge, LLC
Palm Harbor, Florida

The risk of not detecting a material misstatement resulting from fraud is higher than for one resulting from error, as fraud may involve collusion, forgery, intentional omissions, misrepresentations, or the override of internal control. Misstatements, including omissions, are considered material if there is a substantial likelihood that, individually or in the aggregate, they would influence the judgment made by a reasonable user based on the financial statements.

In performing an audit in accordance with generally accepted auditing standards, we:

- Exercise professional judgment and maintain professional skepticism throughout the audit.

- Identify and assess the risks of material misstatement of the financial statements, whether due to fraud or error, and design and perform audit procedures responsive to those risks. Such procedures include examining, on a test basis, evidence regarding the amounts and disclosures in the financial statements.

- Obtain an understanding of internal control relevant to the audit in order to design audit procedures that are appropriate in the circumstances, but not for the purpose of expressing an opinion on the effectiveness of Southern Road & Bridge, LLC's internal control. Accordingly, no such opinion is expressed.

- Evaluate the appropriateness of accounting policies used and the reasonableness of significant accounting estimates made by management, as well as evaluate the overall presentation of the financial statements.

- Conclude whether, in our judgment, there are conditions or events, considered in the aggregate, that raise substantial doubt about Southern Road & Bridge, LLC's ability to continue as a going concern for a reasonable period of time.

Report on Supplementary Information

Our audit was conducted for the purpose of forming an opinion on the financial statements as a whole. The supplementary schedules of earnings from contracts, contracts completed, contracts in progress, and general and administrative expenses are presented for purposes of additional analysis and are not a required part of the financial statements. Such information is the responsibility of management and was derived from and relates directly to the underlying accounting and other records used to prepare the financial statements. The information has been subjected to the auditing procedures applied in the audit of the financial statements and certain additional procedures, including comparing and reconciling such information directly to the underlying accounting and other records used to prepare the financial statements or to the financial statements themselves, and other additional procedures in accordance with auditing standards generally accepted in the United States of America. In our opinion, the information is fairly stated in all material respects in relation to the financial statements as a whole.

Saltmarsh

Tampa, Florida
February 24, 2026

SOUTHERN ROAD & BRIDGE, LLC
BALANCE SHEET
DECEMBER 31, 2025

ASSETS

Current Assets:	
Cash and cash equivalents	$ 3,992,124
Contract receivables	12,999,943
Contract assets	8,314,073
Related party notes receivable, current	212,049
Total current assets	25,518,189
Property and Equipment, net	1,842,435
Other Assets	
Right of use assets, operating	16,721
Right of use assets, finance	715,263
Investment in captive insurance company	795,723
Related party notes receivable, less current maturities	1,928,828
Total other assets	3,456,535
Total Assets	$ 30,817,159

LIABILITIES AND MEMBERS' EQUITY

Current Liabilities:	
Current maturities of long-term debt	$ 219,093
Accounts payable	2,739,946
Contract liabilities	189,832
Current portion of operating lease liabilities	4,765
Current portion of finance lease liabilities	259,417
Total current liabilities	3,413,053
Long-Term Liabilites:	
Long-term debt, less current maturities	428,322
Operating lease liabilities, less current portion	11,956
Finance lease liabilities, less current portion	463,203
Total long-term liabilities	903,481
Total liabilities	4,316,534
Members' Equity	26,500,625
Total Liabilities and Members' Equity	$ 30,817,159

The accompanying notes are an integral part of these financial statements.

SOUTHERN ROAD & BRIDGE, LLC
STATEMENT OF INCOME AND CHANGES IN MEMBERS' EQUITY
YEAR ENDED DECEMBER 31, 2025

Revenues Earned	$ 95,532,398
Cost of Revenues Earned	78,455,721
Gross profit	17,076,677
General and Administrative Expenses	1,434,485
Income from Operations	15,642,192
Other Income (Expense):	
Gain on disposition of property and equipment	32,141
Interest expense	(59,548)
Interest income	208,117
Total other income, net	180,710
Net Income	15,822,902
Members' Equity Balance, January 1, 2025	24,054,723
Distributions	(13,377,000)
Members' Equity Balance, December 31, 2025	$ 26,500,625

The accompanying notes are an integral
part of these financial statements.

SOUTHERN ROAD & BRIDGE, LLC
STATEMENT OF CASH FLOWS
YEAR ENDED DECEMBER 31, 2025

Cash Flows From Operating Activities:	
Net income	$ 15,822,902
Adjustments to reconcile net income	
to net cash provided by operating activities:	
Depreciation and amortization	752,531
Provision for credit losses	113,583
Gain on disposition of property and equipment	(32,141)
Changes in operating assets and liabilities -	
Contract receivables	493,633
Contract assets	(260,825)
Right of use assets - operating lease	21,273
Accounts payable	(408,334)
Accrued expenses	(328,945)
Contract liabilities	(658,838)
Operating lease liabilities	(13,605)
Net cash provided by operating activities	15,501,234
Cash Flows From Investing Activities:	
Purchases of property and equipment	(1,128,038)
Payments received on related party note receivable	159,123
Payment received on employee note receivable	1,807
Investment in captive insurance company	(465,278)
Net cash used in investing activities	(1,432,386)
Cash Flows From Financing Activities:	
Distributions to members	(13,377,000)
Repayment of long-term debt	(187,313)
Repayment of finance lease liabilities	(244,640)
Net cash used in financing activities	(13,808,953)
Net Increase in Cash and Cash Equivalents	259,895
Cash and Cash Equivalents at January 1, 2025	3,732,229
Cash and Cash Equivalents at December 31, 2025	$ 3,992,124
Supplemental Disclosures of Cash Flow Information:	
Cash paid during the year for interest	$ 59,548
Supplemental Schedule of Noncash Investing and Financing Activities:	
Long-term debt incurred for purchase of property and equipment	$ 451,064
Right of use assets obtained in exchange for finance lease liabilities	$ 715,157

The accompanying notes are an integral part of these financial statements.

NOTE 1 - SUMMARY OF SIGNIFICANT ACCOUNTING POLICIES

Nature of Operations:

The Company operates as a contractor engaged in paving roadways and restoring bridges, generally across the Southeast. The work is performed primarily under unit-price and fixed-price contracts. Contract lengths vary but are typically less than one year.

Accounting Estimates:

The preparation of the financial statements in conformity with accounting principles generally accepted in the United States of America requires management to make estimates and assumptions that affect the reported amounts of assets and liabilities and the disclosure of contingent assets and liabilities at the date of the financial statements and reported amounts of revenue and expenses during the reporting period. Actual results could differ from those estimates. Management periodically evaluates estimates used in the preparation of the financial statements for continued reasonableness. Appropriate adjustments, if any, to the estimates used are made prospectively based upon such periodic evaluation. It is reasonably possible that changes may occur in the near term that would affect management's estimates with respect to the percentage of contract completion, useful lives of property and equipment, and overhead cost allocations.

Revisions in estimated contract profits are made in the year in which circumstances requiring the revision become known.

Balance Sheet Classifications:

The Company includes in current assets and liabilities retentions receivable and payable under construction contracts that may extend beyond one year. A one-year time period is used as classifying all other current assets and liabilities.

Cash and Cash Equivalents:

The Company considers all liquid investments with an original maturity of three months or less to be cash equivalents.

Revenue and Cost Recognition:

The construction services performed under each contract represent a single performance obligation that is satisfied over time. Revenues from construction contracts are recognized over time using the cost-to-cost input method, measured by the percentage of costs incurred to date to estimated total costs for each contract. This method is used because management considers costs incurred to date to be the best available measure of progress on these contracts. Because of the inherent uncertainties in estimating costs, it is at least reasonably possible that the Company's estimates of costs and revenues will change in the near term.

NOTE 1 - SUMMARY OF SIGNIFICANT ACCOUNTING POLICIES (Continued)

Revenue and Cost Recognition (Continued):

Contract costs include all subcontract, direct material and labor costs and those indirect costs related to contract performance, such as indirect labor, insurance, supplies, tools, repairs and depreciation. Costs of inefficiencies or wasted resources (material or labor) are excluded when measuring progress and are expensed as incurred. General and administrative costs are charged to expense as incurred. Provisions for estimated losses on uncompleted contracts are made in the period in which such losses are determined. Changes in job performance, job conditions and estimated profitability, including those arising from contract penalty provisions and final contract settlements, may result in revisions to costs and income and are recognized in the period in which the revisions are determined. Changes in estimated job profitability resulting from variable consideration (such as incentives for completing a contract early or on time, penalties for not completing a contract on time, claims for which the Company has enforceable rights, or contract modifications/change orders in which the scope of modification has been approved, but the price has not been determined or approved) are accounted for as changes in estimates in the current period, but limited to an amount that will not result in a significant reversal of revenue in future periods.

Contract Receivables:

Contract receivables from construction are based on amounts billed to customers. The Company provides an allowance for credit losses, when necessary, which is based upon a review of outstanding receivables, historical collection information, existing economic conditions and reasonable and supportable forecasts. Normal contract receivables are due 30 days after issuance of the invoice. Retainages are due upon completion of contracts. Unbilled receivables result from accrual of revenues on contracts completed for which billings have not yet been rendered. Retainage and unbilled receivables for which the right to payment is unconditional are included in contract receivables. Contract receivables past due more than 30 days are considered delinquent. Delinquent contract receivables are written off based on individual credit evaluation and specific circumstances of the customer. Balances that remain outstanding after the Company has used reasonable collection efforts are written off. Management determined no allowance was necessary as of December 31, 2025.

Contract Assets and Contract Liabilities

The contract asset, "Costs and estimated earnings in excess of billings on uncompleted contracts," represents revenues recognized in excess of amounts billed. The contract liability, "Billings in excess of costs and estimated earnings on uncompleted contracts," represents billings in excess of revenues recognized.

Retainage on uncompleted contracts and unbilled receivables that are not due until certain contract conditions are met, are included in contract assets and contract liabilities. The Company's contract assets and contract liabilities are reported net, on a contract-by-contract basis.

NOTE 1 - SUMMARY OF SIGNIFICANT ACCOUNTING POLICIES (Continued)

Property and Equipment:

Property and equipment are stated at cost and depreciated over the estimated useful lives of the individual assets utilizing the straight-line method. Estimated useful lives are generally as follows:

Construction equipment	5 - 10 years
Transportation equipment	4 - 5 years
Office furniture and equipment	5 - 7 years

Major expenditures for property and equipment, and those which substantially increase useful lives, are capitalized. Maintenance, repairs and minor renewals not included as contract costs are expensed as incurred. When assets are retired, or otherwise disposed of, their costs and related accumulated depreciation are removed from the accounts and any resulting gain or loss is included in income for the year.

Income Taxes:

The Company, with the consent of its members, has elected to be taxed as a partnership under the provisions of the Internal Revenue Code, whereby income is passed through to the individual members. Under this election, the Company does not pay any federal or state income taxes. Accordingly, no provision for income taxes on current period income has been made in the accompanying financial statements.

If it is probable that an uncertain tax position will result in a material liability and the amount of the liability can be estimated, then the estimated liability is accrued. If the Company were to incur any income tax liability in the future, interest on any income tax liability would be reported as interest expense, and penalties on any income tax would be reported as income taxes. As of December 31, 2025, management believes there were no uncertain tax positions.

Leases:

ASC 842, "*Leases*" ("ASC 842") requires a lessee to recognize a right-of-use asset and a lease liability for all leases with a term greater than 12 months on its balance sheet regardless of whether the lease is classified as financing or operating.

The Company's lessee arrangements include both operating and finance leases for the Company's office facility, storage space, and various pieces of equipment. Under these arrangements, the Company records right-of-use assets and corresponding lease liabilities, each of which is based on the present value of the remaining lease payments discounted using the risk-free rate practical expedient allowable under ASC 842. Right-of-use assets are reported in noncurrent assets and the related lease liabilities are reported in current and long-term liabilities on the balance sheet. All leases are recorded on the balance sheet except for leases with an initial term less than 12 months for which the Company elected short-term lease recognition under ASC 842. Lease terms may contain renewal and extension options and early termination features. Lease expense is recognized on a straight-line basis over the lease term.

NOTE 1 - SUMMARY OF SIGNIFICANT ACCOUNTING POLICIES (Continued)

Subsequent Events:

Management has evaluated subsequent events through February 24, 2026 which is the date the financial statements were available to be issued.

NOTE 2 - CONTRACT RECEIVABLES

Contract receivables consist of the following:

Completed contracts	$ 11,902
Contracts in progress	12,870,728
	12,882,630
Retainage on completed contracts	117,313
	$ 12,999,943

As of December 31, 2024 the balance of contract receivables was $13,493,576.

NOTE 3 - CONTRACT ASSETS AND LIABILITIES

Information concerning uncompleted contracts is summarized as follows:

Cost incurred on uncompleted contracts	$ 95,045,810
Estimated earnings	25,987,298
	121,033,108
Less billings to date	(113,730,476)
	7,302,632
Retainage receivable on uncompleted contracts	821,609
	$ 8,124,241

NOTE 3 - CONTRACT ASSETS AND LIABILITIES (Continued)

Retainage receivable and contract balances from uncompleted contracts with customers are summarized as follows:

Costs and estimated earnings in excess of billings on uncompleted contracts	$ 7,519,978
Retainage - included in contract assets	794,095
Billings in excess of costs and estimated earnings on uncompleted contracts	(217,346)
Retainage - included in contract liabilities	27,514
	$ 8,124,241

Included in the accompanying balance sheet under the following captions:

Contract assets	$ 8,314,073
Contract liabilities	(189,832)
	$ 8,124,241

As of December 31, 2024, the balance in contract assets was $8,053,248 and the balance in contract liabilities was $848,670.

NOTE 4 - BACKLOG

Backlog represents the amount of revenue the Company expects to realize from work to be performed on contracts in progress at year end and from contractual agreements on which work has not yet begun. The following schedule summarizes changes in backlog on contracts for the year ended December 31, 2025:

Backlog balance at beginning of year	$ 97,884,470
New contracts during the year	70,739,692
Contract adjustments on contracts in progress	13,677,702
	182,301,864
Less contract revenue earned during the year	(95,532,398)
Backlog balance at end of year	$ 86,769,466

Contracts totaling $461,285 were signed but not yet started at December 31, 2025.

NOTE 5 - PROPERTY AND EQUIPMENT

Property and equipment consist of the following:

Construction equipment	$	6,394,270
Transportation equipment		2,055,344
Office furniture and equipment		15,415
		8,465,029
Less accumulated depreciation		(6,622,594)
Property and equipment, net	$	1,842,435

Depreciation expense was $501,517 for the year ended December 31, 2025.

NOTE 6 - INVESTMENT IN CAPTIVE INSURANCE COMPANY

The Company holds an investment totaling $795,723 in Highway Insurance Solutions, LTD, a group captive insurance company domiciled in the Cayman Islands. This captive insurance company provides workers' compensation insurance, auto liability, auto physical damage, and general liability insurance coverage to the Company.

NOTE 7 - RELATED PARTY NOTES RECEIVABLE

Related party notes receivable consist of:

Note receivable from related party, bearing interest at 6%, matures May 2029, secured by equipment	$	740,877
Note receivable from related party, unsecured, bearing interest at 5%, no interest is accrued until June 2026, matures May 2041		1,400,000
		2,140,877
Less current maturities		(212,049)
Related party notes receivable, less current maturities	$	1,928,828

NOTE 7 - RELATED PARTY NOTES RECEIVABLE (Continued)

Scheduled maturities for related party notes receivable are as follows:

2026	$ 212,049
2027	245,880
2028	260,347
2029	275,650
2030	77,260
Thereafter	1,069,691
	$ 2,140,877

NOTE 8 - EMPLOYEE NOTE RECEIVABLE

In 2019, the Company sold land to an employee for $168,000 in exchange for a note receivable, with monthly payments of $887. In 2025, the Company wrote off the remaining balance of $113,583 as a credit loss.

NOTE 9 - LINE OF CREDIT

The Company has a $5,000,000 revolving line of credit with a financial institution which renews annually and is due upon demand. The line of credit accrues interest at the SOFR Index plus 3% (6.87% on December 31, 2025), is secured by substantially all assets of the Company, is guaranteed by the members, and contains various restrictive covenants. At December 31, 2025 there was no balance on the line of credit.

NOTE 10 - LONG-TERM DEBT

Long-term debt consists of the following:

Notes payable to bank and finance companies, bearing interest at fixed rates up to 6.6%, maturities through January 2031, secured by substantially all assets of the Company, guaranteed by the members	$ 647,415
Less current maturities	(219,093)
Long-term debt, less current maturities	$ 428,322

NOTE 10 - LONG-TERM DEBT (Continued)

Scheduled maturities of long-term debt are as follows:

2026	$	219,093
2027		138,163
2028		126,730
2029		97,478
2030		62,187
Thereafter		3,764
	$	647,415

NOTE 11 - LEASES

Operating Leases:

The Company leases an office facility and storage space from a third-party lender under a lease that expired in August 2025 and continues on a month-to-month basis. The Company also leases equipment from a third-party lender under a lease which expires in April 2029. As of December 31, 2025, the right-of-use assets related to the operating leases totaled $16,721 and the lease liabilities totaled $16,721. Lease expense for the year ended December 31, 2025 was $161,082 and includes short-term leases with terms that are less than 12 months.

The following table presents supplemental information pertaining to the operating leases as of and for the year ended December 31, 2025:

Operating cash flows from operating leases	$	36,050
Weighted-average remaining lease term in years for operating leases		3.33
Weighted-average discount rate for operating leases		4.35%

The following table represents the maturities of the Company's operating lease liabilities and the present value discount at December 31, 2025:

2026	$	5,378
2027		5,378
2028		5,378
2029		1,793
Total undiscounted cash flows		17,927
Less present value discount		(1,206)
Total lease liabilities	$	16,721

NOTE 11 - LEASES (Continued)

Finance Leases:

The Company leases fleet vehicles under leases which extend through July 2029. As of December 31, 2025, the right-of-use assets related to the finance leases totaled $715,263 and the lease liabilities totaled $722,620. Amortization expense for the year ended December 31, 2025 was $251,014.

The following table presents supplemental information pertaining to the finance leases as of and for the year ended December 31, 2025:

Operating cash flows from finance leases (i.e. interest)	$	25,493
Financing cash flows from finance leases (i.e. principal portion)	$	244,440
ROU assets obtained in exchange for new finance lease liabilities	$	715,157
Weighted-average remaining lease term in years for finance leases		3.02
Weighted-average discount rate for finance leases		4.02%

The following table represents the maturities of the Company's finance lease liabilities and the present value discount at December 31, 2025:

2026	$	283,398
2027		226,967
2028		195,477
2029		62,362
Total undiscounted cash flows		768,204
Less present value discount		(45,584)
Total lease liabilities	$	722,620

NOTE 12 - COMMITMENTS AND CONTINGENCIES

Concentration of Credit Risk:

The Company's cash balances held at financial institutions are insured by the Federal Deposit Insurance Corporation ("FDIC") up to certain limits. At December 31, 2025, the Company had cash balances of $4,170,755 held by financial institutions in excess of insured limits.

Concentration of Revenue - Major Customers:

The Company's customer base consists of a diverse mix of corporate and governmental entities in a wide variety of industries. During 2025, the Company derived 25% of its total contract revenue from one major customer. At December 31, 2025, amounts due from this one major customer comprised 34% of total contract receivables and retainage at December 31, 2025.

NOTE 12 - COMMITMENTS AND CONTINGENCIES (Continued)

Captive Insurance Policy:

The Company manages its risk for various insurance claims through its participation in a captive insurance policy. The Company incurred premiums of $1,890,242 for the year ended December 31, 2025. Management is not aware of any claims in excess of fund balances at December 31, 2025; accordingly, no reserve has been recorded at December 31, 2025.

NOTE 13 - RELATED PARTY TRANSACTIONS

The Company holds notes receivables with various related parties as discussed in Note 7.

The Company's payroll is processed by a related entity. Payroll processing expenses were approximately $322,583 for the year ended December 31, 2025.

The Company leases office space from a related entity under a lease which matured in December 2025 and subsequently continued on a month-to-month basis. Operating lease expense related to this agreement was approximately $122,000 for the year ended December 31, 2025.

The Company leases equipment from a related entity on an as-needed basis. Equipment rental expenses paid to this entity amounted to approximately $1,032,000 for the year ended December 31, 2025, which is included within cost of revenues earned.

SUPPLEMENTARY INFORMATION

SOUTHERN ROAD & BRIDGE, LLC
SCHEDULE OF EARNINGS FROM CONTRACTS
YEAR ENDED DECEMBER 31, 2025

	Revenues Earned	Cost of Revenues Earned	Gross Profit (Loss)
Contracts completed during the year	$ 25,367,676	$ 25,231,456	$ 136,220
Contracts in progress at year-end	70,070,010	52,727,393	17,342,617
Prior year closed jobs	94,712	496,872	(402,160)
	$ 95,532,398	$ 78,455,721	$ 17,076,677

This page intentionally left blank.

SOUTHERN ROAD & BRIDGE, LLC
SCHEDULE OF CONTRACTS COMPLETED
YEAR ENDED DECEMBER 31, 2025

Job	Contract Totals		
	Revenues Earned	Cost of Revenues	Gross Profit (Loss)
Pioneer Memorial Bridge	$ 17,345,130	$ 14,641,347	$ 2,703,783
Vickers Bridge	7,930,570	7,758,416	172,154
St Louis	7,593,850	6,685,859	907,991
FDOT E8U06	4,419,303	3,819,576	599,727
DJ00538	3,401,891	4,521,451	(1,119,560)
I-10 Fender Repair	2,948,039	1,962,504	985,535
I-65 Kennedy Bridge	2,864,563	2,149,026	715,537
Jax Port	2,802,210	1,589,675	1,212,535
Cobb Co	2,076,983	1,933,051	143,932
Yankees Bridge	1,976,927	968,437	1,008,490
Museum Point	1,568,286	1,074,414	493,872
Call 04	1,427,350	2,000,490	(573,140)
Y24-720 Bridge	1,411,626	1,722,478	(310,852)
FDOT E6O05	1,078,081	1,024,001	54,080
Old Tampa Hwy	886,439	1,095,565	(209,126)
25-015 Hurricane Repair	836,442	591,064	245,378
25-016 Hurricane Repair	728,679	471,120	257,559
Pedestrian Bridge - CO	659,825	196,289	463,536
Pier Rehab	314,338	305,413	8,925
Bridge No	172,003	73,833	98,170
Seal Bridge Deck	58,744	26,555	32,189
	$ 62,501,279	$ 54,610,564	$ 7,890,715

Before January 1, 2025			Year Ended December 31, 2025		
Revenues Earned	Cost of Revenues	Gross Profit	Revenues Earned	Cost of Revenues	Gross Profit (Loss)
$ 17,336,297	$ 14,346,012	$ 2,990,285	$ 8,833	$ 295,335	$ (286,502)
2,792,898	2,298,463	494,435	5,137,672	5,459,953	(322,281)
66,493	58,184	8,309	7,527,357	6,627,675	899,682
4,419,303	3,687,417	731,886	-	132,159	(132,159)
-	-	-	3,401,891	4,521,451	(1,119,560)
2,923,266	1,919,491	1,003,775	24,773	43,013	(18,240)
2,861,106	2,117,066	744,040	3,457	31,960	(28,503)
2,798,009	1,553,979	1,244,030	4,201	35,696	(31,495)
-	-	-	2,076,983	1,933,051	143,932
245,085	185,067	60,018	1,731,842	783,370	948,472
57,220	47,087	10,133	1,511,066	1,027,327	483,739
362,368	335,398	26,970	1,064,982	1,665,092	(600,110)
814,530	670,557	143,973	597,096	1,051,921	(454,825)
1,078,081	904,374	173,707	-	119,627	(119,627)
718,532	675,832	42,700	167,907	419,733	(251,826)
154,916	127,932	26,984	681,526	463,132	218,394
170,347	140,166	30,181	558,332	330,954	227,378
-	-	-	659,825	196,289	463,536
314,338	295,375	18,963	-	10,038	(10,038)
20,814	16,708	4,106	151,189	57,125	94,064
-	-	-	58,744	26,555	32,189
$ 37,133,603	$ 29,379,108	$ 7,754,495	$ 25,367,676	$ 25,231,456	$ 136,220

SOUTHERN ROAD & BRIDGE, LLC
SCHEDULE OF CONTRACTS IN PROGRESS
YEAR ENDED DECEMBER 31, 2025

	Contract Totals		From Inception to	
Job	Contract Value	Estimated Gross Profit (Loss)	Revenues Earned	Cost of Revenue
Walnut St	$ 40,365,965	$ 10,701,564	$ 24,930,166	$ 18,320,841
Dauphin Island	33,659,866	6,135,993	3,910,889	3,197,957
Berwick Bay Bridge	33,000,303	691,952	30,976,243	30,326,732
Pasco Culverts	21,160,000	7,674,960	15,070,722	9,604,409
Pedestrian Bridge - FL	15,074,721	4,295,500	11,805,014	8,441,208
Rainbow Bridge	10,927,788	3,116,926	9,914,161	7,086,351
Pinellas Maint	9,674,763	3,974,474	7,366,707	4,340,402
SR 16 Mobile County	7,593,015	1,384,149	51,277	41,930
Sunshine Skyway	5,606,515	1,035,938	3,124,830	2,547,443
Pasco County Maintenance - 1623	4,351,300	1,182,303	4,350,207	3,168,201
Smith Co	3,583,067	823,308	2,270,475	1,748,771
63rd Crt	2,883,467	525,654	48,853	39,947
CLC Bridge	2,479,338	451,970	585,008	478,364
St Aug Fishing Pier	2,390,198	435,694	26,123	21,361
Call 10	2,188,681	707,032	1,864,031	1,261,874
Kings Hwy	1,725,999	(317,846)	1,516,079	1,795,268
E3X74 Escambia County	1,642,742	260,609	1,295,284	1,089,797
Bridge 96.3A + B	1,478,345	269,490	38,018	31,088
Bay County	1,467,000	267,424	329,784	269,667
Collier County 25-8410	1,184,257	215,875	13,775	11,264
703 McLeod Road Bridge	1,165,792	184,938	882,574	742,565
Dow Bridge	1,115,100	203,292	18,314	14,975
Trinity Blvd	722,203	131,696	7,764	6,348
Stormwater Pipe Repairs	587,071	167,026	545,434	390,254
Bel Lido Bridge	550,191	100,278	8,406	6,874
Del Prado Blvd	544,102	99,184	9,505	7,772
Morris Bridge Rd	160,850	43,714	66,226	48,228
Bridge Remediation	58,650	10,696	7,239	5,919
	$ 207,341,289	$ 44,773,793	$ 121,033,108	$ 95,045,810

December 31, 2025			At December 31, 2025		Year Ended December 31, 2025		
Gross Profit (Loss)	Billed to Date	Estimated Cost to Complete	Costs & Estimated Earnings in Excess of Billings	Billings in Excess of Costs & Estimated Earnings	Revenues Earned	Cost of Revenues	Gross Profit (Loss)
$ 6,609,325	$ 24,852,660	$ 11,343,560	$ 77,506	$ -	$ 23,495,071	$ 17,139,301	$ 6,355,770
712,932	877,105	24,325,916	3,033,784	-	3,910,889	3,197,957	712,932
649,511	29,917,433	1,981,619	1,058,810	-	6,303,799	5,975,623	328,176
5,466,313	15,070,511	3,880,631	211	-	3,406,325	2,358,151	1,048,174
3,363,806	11,396,324	2,338,013	408,690	-	5,246,531	3,699,291	1,547,240
2,827,810	9,779,260	724,511	134,901	-	7,157,983	4,817,433	2,340,550
3,026,305	7,372,029	1,359,887	-	5,322	5,222,438	3,127,093	2,095,345
9,347	-	6,166,936	51,277	-	51,277	41,930	9,347
577,387	1,977,811	2,023,134	1,147,019	-	3,124,830	2,547,443	577,387
1,182,006	4,351,300	796	-	1,093	2,723,122	1,938,996	784,126
521,704	1,939,429	1,010,988	331,046	-	2,270,475	1,748,771	521,704
8,906	-	2,317,866	48,853	-	48,853	39,947	8,906
106,644	50,000	1,549,004	535,008	-	585,008	478,364	106,644
4,762	-	1,933,143	26,123	-	26,123	21,361	4,762
602,157	1,838,681	219,775	25,350	-	1,843,329	1,244,838	598,491
(279,189)	1,459,484	248,577	56,595	-	1,495,279	1,778,574	(283,295)
205,487	1,374,180	292,336	-	78,896	1,273,348	1,071,734	201,614
6,930	-	1,177,767	38,018	-	38,018	31,088	6,930
60,117	250,969	929,909	78,815	-	329,784	269,667	60,117
2,511	-	957,118	13,775	-	13,775	11,264	2,511
140,009	547,082	238,289	335,492	-	840,865	708,197	132,668
3,339	-	896,833	18,314	-	18,314	14,975	3,339
1,416	-	584,159	7,764	-	7,764	6,348	1,416
155,180	470,718	29,791	74,716	-	545,434	390,254	155,180
1,532	-	443,039	8,406	-	8,406	6,874	1,532
1,733	-	437,146	9,505	-	9,505	7,772	1,733
17,998	160,850	68,908	-	94,624	66,226	48,228	17,998
1,320	44,650	42,035	-	37,411	7,239	5,919	1,320
$ 25,987,298	$ 113,730,476	$ 67,521,686	$ 7,519,978	$ 217,346	$ 70,070,010	$ 52,727,393	$ 17,342,617

SOUTHERN ROAD & BRIDGE, LLC
SCHEDULE OF GENERAL AND ADMINISTRATIVE EXPENSES
YEAR ENDED DECEMBER 31, 2025

Insurance	$	1,890,741
Salaries and related benefits		1,763,512
Depreciation and amortization		752,531
Auto expenses		355,443
Taxes and licenses		329,743
Estimating expenses		210,638
Repairs and maintenance		190,406
Lease expense		161,082
Office expenses		150,482
Professional fees		144,595
Advertising and marketing		129,854
Yard expense		94,896
Charitable contributions		72,679
Telephone and utilities		67,348
Travel and entertainment		62,699
Bank fees		37,240
Dues and subscriptions		17,915
Education and training		14,120
Overhead allocation		(5,125,022)
	$	1,434,485

Bid Form for City of St Pete Beach
On-Call Civil Construction Services
Request for Proposal

Specifications for the numbered pay items can be found in the current FDOT "Standard Specifications for Road and Bridge Construction".
Bid quantities are for comparison purposes only. This contract consists of various projects which are not yet defined and no quantities are guaranteed.

Pay Item No.	Item Description	Units	Est. Quantity	Unit Price	Amount
0101 1 (2501-5000)	MOBILIZATION (PER WORK ASSIGNMENT/LOCATION) - $2,501 TO $5,000	LS	1	$5000.00	$5000.00
0101 1 (5501-25000)	MOBILIZATION (PER WORK ASSIGNMENT/LOCATION) - $5,001 TO $25,000	LS	1	$10000.00	$10000.00
0101 1 (25001-50000)	MOBILIZATION (PER WORK ASSIGNMENT/LOCATION) - $25,001 TO $50,000	LS	1	$15000.00	$15000.00
0101 1 (50001-150000)	MOBILIZATION (PER WORK ASSIGNMENT/LOCATION) - $50,001 TO $150,000	LS	1	$30000.00	$30000.00
0101 1 (150001-250000)	MOBILIZATION (PER WORK ASSIGNMENT/LOCATION) - $150,001 TO $250,000	LS	1	$30000.00	$30000.00
0101 1 (250001-350000)	MOBILIZATION (PER WORK ASSIGNMENT/LOCATION) - $250,001 TO $350,000	LS	1	$35000.00	$35000.00
0101 1 (350001-500000)	MOBILIZATION (PER WORK ASSIGNMENT/LOCATION) - $350,001 to $500,000	LS	1	$40000.00	$40000.00
0101 1 (500001+)	MOBILIZATION (PER WORK ASSIGNMENT/LOCATION) - $500,001 or more	LS	1	$50000.00	$50000.00
0101 1 (2501-5000)	EMERGENCY MOBILIZATION (PER WORK ASSIGNMENT/LOCATION) - $2,501 TO $5,000	LS	1	$10000.00	$10000.00
0101 1 (5501-25000)	EMERGENCY MOBILIZATION (PER WORK ASSIGNMENT/LOCATION) - $5,001 TO $25,000	LS	1	$15000.00	$15000.00
0101 1 (25001-50000)	EMERGENCY MOBILIZATION (PER WORK ASSIGNMENT/LOCATION) - $25,001 TO $50,000	LS	1	$20000.00	$20000.00
0101 1 (50001-150000)	EMERGENCY MOBILIZATION (PER WORK ASSIGNMENT/LOCATION) - $50,001 TO $150,000	LS	1	$25000.00	$25000.00

0101 1 (150001-250000)	EMERGENCY MOBILIZATION (PER WORK ASSIGNMENT/LOCATION) - $150,001 TO $250,000	LS	1	$30000.00	$30000.00
0102 1	MAINTENANCE OF TRAFFIC	Lump Sum (LS) cost to be assigned for each Task Order and shall not exceed 10% of the proposed construction cost.			
0102 3	COMMERCIAL MATERIAL FOR TEMPORARY DRIVEWAY MAINTENANCE	CY	50	$200.00	$10000.00
0102 14	TRAFFIC CONTROL OFFICER	HR	500	$98.00	$49000.00
0102 60	WORK ZONE SIGN	ED	6000	$20.00	$120000.00
0102 61	BUSINESS SIGN	EA	5	$2,000.00	$10000.00
0102 71 11	BARRIER WALL, TEMPORARY, F&I, CONCRETE	LF	200	$32.00	$6400.00
0102 71 13	BARRIER WALL, TEMPORARY, F&I, LOW PROFILE, CONCRETE	LF	200	$50.00	$10000.00
0102 71 14	BARRIER WALL, TEMPORARY, F&I, TYPE K	LF	200	$39.00	$7800.00
0102 71 21	BARRIER WALL, TEMPORARY, RELOCATE, CONCRETE	LF	200	$22.00	$4400.00
0102 71 23	BARRIER WALL, TEMPORARY, RELOCATE, LOW PROFILE, CONCRETE	LF	200	$25.00	$5000.00
0102 71 24	BARRIER WALL, TEMPORARY, RELOCATE, TYPE K	LF	200	$24.00	$4800.00
0102 73	TEMPORARY GUARDRAIL	LF	20	$250.00	$5000.00
0102 74 1	CHANNELIZING DEVICE- TYPES I, II, DI, VP, DRUM, OR LCD	ED	15000	$1.00	$15000.00
0102 74 2	CHANNELIZING DEVICE, TYPE III, 6'	ED	1000	$1.00	$1000.00
0102 74 7	CHANNELIZING DEVICE- PEDESTRIAN LCD (LONGITUDINAL CHANNELIZING DEVICE)	LF	1000	$1.00	$1000.00

0102 75 1	TEMPORARY SEPARATOR, F&I REMOVE	LF	500	$68.00	$34000.00
0102 75 2	TEMPORARY SEPARATOR, F&I REMAIN	LF	500	$68.00	$34000.00
0102 75 3	TEMPORARY SEPARATOR, INSTALL	LF	500	$68.00	$34000.00
0102 75 4	TEMPORARY SEPARATOR, RELOCATE	LF	500	$38.00	$19000.00
0102 75 5	TEMPORARY SEPARATOR, REMOVE	LF	500	$38.00	$19000.00
0102 76	ARROW BOARD / ADVANCE WARNING ARROW PANEL	ED	250	$1.00	$250.00
0102 78	TEMPORARY RETROREFLECTIVE PAVEMENT MARKER	EA	50	$10.00	$500.00
0102 89 1	TEMPORARY CRASH CUSHION, REDIRECTIVE OPTION	LO	5	$1300.00	$6500.00
0102 99	PORTABLE CHANGEABLE MESSAGE SIGN, TEMPORARY	ED	600	$15.00	$9000.00
0102 104	TEMPORARY SIGNALIZATION AND MAINTENANCE, INTERSECTION	ED	100	$35.00	$3500.00
0102 107 1	TEMPORARY TRAFFIC DETECTION AND MAINTENANCE, INTERSECTION	ED	100	$30.00	$3000.00
0102 150 1	PORTABLE REGULATORY SIGN	ED	50	$40.00	$2000.00
0102 150 2	RADAR SPEED DISPLAY UNIT	ED	50	$10.00	$500.00
0102 911 1	PAVEMENT MARKING REMOVABLE TAPE, WHITE OR BLACK, SKIP	LF	500	$10.00	$5000.00
0102 911 2	PAVEMENT MARKING REMOVABLE TAPE, WHITE, BLACK, SOLID	LF	500	$10.00	$5000.00
0102 911 3	PAVEMENT MARKING REMOVABLE TAPE, WHITE OR BLACK, OTHER	SF	25	$100.00	$2500.00

0102 912 1	PAVT MARKING REMOVABLE TAPE, YELLOW, SKIP	LF	500	$10.00	$5000.00
0102 912 2	PAVEMENT MARKING REMOVABLE TAPE, YELLOW, SOLID	LF	500	$10.00	$5000.00
0102 912 3	PAVEMENT MARKING REMOVABLE TAPE, YELLOW, OTHER	SF	25	$100.00	$2500.00
0104 1	ARTIFICIAL COVERINGS /ROLLED EROSION CONTROL PRODUCTS	SY	150	$15.00	$2250.00
0104 10 3	SEDIMENT BARRIER	LF	5000	$20.00	$100000.00
0104 11	FLOATING TURBIDITY BARRIER	LF	100	$50.00	$5000.00
0104 12	STAKED TURBIDITY BARRIER- NYLON REINFORCED PVC	LF	100	$75.00	$7500.00
0104 13 1	STAKED SILT FENCE, TYPE III	LF	500	$25.00	$12500.00
0104 13 2	STAKED SILT FENCE, TYPE IV	LF	500	$30.00	$15000.00
0104 18	INLET PROTECTION SYSTEM	EA	100	$500.00	$50000.00
0107 1	LITTER REMOVAL	AC	10	$10,000.00	$100000.00
0107 2	MOWING	AC	10	$25,000.00	$250000.00
0110 2 1	CLEARING & GRUBBING	AC	10	$32,000.00	$320000.00
0110 3	REMOVAL OF EXISTING STRUCTURES/BRIDGES	SF	20	$300.00	$6000.00
0110 4 10	REMOVAL OF EXISTING CONCRETE	SY	2000	$60.00	$120000.00
0110 7 1	MAILBOX, F&I SINGLE	EA	5	$450.00	$2250.00

0120 1	REGULAR EXCAVATION	CY	3000	$80.00	$240000.00
0120 3	LATERAL DITCH EXCAVATION	CY	100	$90.00	$9000.00
0120 4	SUBSOIL EXCAVATION	CY	100	$150.00	$15000.00
0120 5	CHANNEL EXCAVATION	CY	100	$500.00	$50000.00
0120 6	EMBANKMENT	CY	500	$78.00	$39000.00
0121 70	FLOWABLE FILL	CY	50	$780.00	$39000.00
0125 1	EXCAVATION FOR STRUCTURES	CY	25	$500.00	$12500.00
0145 1	GEOSYNTHETIC REINFORCED SOIL SLOPE	SF	25	$50.00	$1250.00
0160 4	TYPE B STABILIZATION	SY	7000	$30.00	$210000.00
0162 1 11	PREPARED SOIL LAYER-6" DEPTH	SY	50	$100.00	$5000.00
0162 1 12	PREPARED SOIL LAYER, FINISH SOIL LAYER, 12"	SY	50	$100.00	$5000.00
0162 1 21	PREPARED SOIL LAYER, ORGANIC SOIL LAYER, 6"	SY	50	$100.00	$5000.00
285701	OPTIONAL BASE, BASE GROUP 01	SY	100	$150.00	$15000.00
285702	OPTIONAL BASE, BASE GROUP 02	SY	100	$150.00	$15000.00
285703	OPTIONAL BASE, BASE GROUP 03	SY	100	$150.00	$15000.00
285704	OPTIONAL BASE, BASE GROUP 04	SY	1000	$150.00	$150000.00

285705	OPTIONAL BASE, BASE GROUP 05	SY	100	$150.00	$15000.00
285706	OPTIONAL BASE, BASE GROUP 06	SY	1000	$150.00	$150000.00
285707	OPTIONAL BASE, BASE GROUP 07	SY	100	$150.00	$15000.00
285708	OPTIONAL BASE, BASE GROUP 08	SY	1000	$150.00	$150000.00
285709	OPTIONAL BASE, BASE GROUP 09	SY	100	$150.00	$15000.00
285710	OPTIONAL BASE GROUP 10	SY	100	$150.00	$15000.00
285711	OPTIONAL BASE, BASE GROUP 11	SY	100	$150.00	$15000.00
285712	OPTIONAL BASE, BASE GROUP 12	SY	100	$150.00	$15000.00
285713	OPTIONAL BASE, BASE GROUP 13	SY	100	$150.00	$15000.00
285714	OPTIONAL BASE, BASE GROUP 14	SY	100	$150.00	$15000.00
285715	OPTIONAL BASE, BASE GROUP 15	SY	100	$150.00	$15000.00
0327 70 1	MILLING EXIST ASPH PAVT, 1" AVG DEPTH	SY	1000	$40.00	$40000.00
0327 70 2	MILLING EXIST ASPH PAVT, 3 1/2" AVG DEPTH	SY	200	$80.00	$16000.00
0327 70 3	MILLING EXIST ASPH PAVT, 4 1/2" AVG DEPTH	SY	200	$95.00	$19000.00
0327 70 4	MILLING EXIST ASPH PAVT, 3" AVG DEPTH	SY	200	$80.00	$16000.00
0327 70 5	MILLING EXIST ASPH PAVT, 2" AVG DEPTH	SY	200	$70.00	$14000.00

0327 70 6	MILLING EXIST ASPH PAVT, 1 1/2" AVG DEPTH	SY	5000	$50.00	$250000.00
0327 70 7	MILLING EXIST ASPH PAVT, 4" AVG DEPTH	SY	200	$75.00	$15000.00
0327 70 8	MILLING EXIST ASPH PAVT, 2 1/2" AVG DEPTH	SY	200	$60.00	$12000.00
0327 70 11	MILLING EXIST ASPH PAVT, 2 1/4" AVG DEPTH	SY	200	$60.00	$12000.00
0327 70 12	MILLING EXIST ASPH PAVT, 1 1/4" AVG DEPTH	SY	200	$55.00	$11000.00
0327 70 13	MILLING EXIST ASPH PAVT, 1 3/4" AVG DEPTH	SY	200	$55.00	$11000.00
0327 70 15	MILLING EXIST ASPH PAVT, 2 3/4" AVG DEPTH	SY	200	$65.00	$13000.00
0327 70 16	MILLING EXIST ASPH PAVT, 1/2" AVG DEPTH	SY	200	$50.00	$10000.00
0327 70 17	MILLING EXIST ASPH PAVT, 3 1/4" AVG DEPTH	SY	200	$80.00	$16000.00
0327 70 19	MILLING EXIST ASPH PAVT, 3/4" AVG DEPTH	SY	200	$70.00	$14000.00
0327 70 20	MILLING EXIST ASPH PAVT, 3 3/4" AVG DEPTH	SY	200	$80.00	$16000.00
0334 1 12 (1-99)	SUPERPAVE ASPHALTIC CONC, TRAFFIC B, 1-99 TONS	TN	50	$800.00	$40000.00
0334 1 12 (100-199)	SUPERPAVE ASPHALTIC CONC, TRAFFIC B, 100 - 199 TONS	TN	150	$800.00	$120000.00
0334 1 12 (200-300)	SUPERPAVE ASPHALTIC CONC, TRAFFIC B, 200 - 300 TONS	TN	250	$800.00	$200000.00
0334 1 12 (300+)	SUPERPAVE ASPHALTIC CONC, TRAFFIC B, 300 TONS OR MORE	TN	350	$800.00	$280000.00
0334 1 13 (1-99)	SUPERPAVE ASPHALTIC CONC, TRAFFIC C 1 - 99 TONS	TN	50	$800.00	$40000.00

0334 1 13 (100-199)	SUPERPAVE ASPHALTIC CONC, TRAFFIC C 100 - 199 TONS	TN	150	$800.00	$120000.00
0334 1 13 (200-300)	SUPERPAVE ASPHALTIC CONC, TRAFFIC C 200 -300 TONS	TN	250	$800.00	$200000.00
0334 1 13 (300+)	SUPERPAVE ASPHALTIC CONC, TRAFFIC C 300 TONS OR MORE	TN	350	$800.00	$280000.00
0334 1 52 (0-99)	SUPERPAVE ASPHALTIC CONCRETE, TRAFFIC B, PG76-22 0-99 TONS	TN	50	$800.00	$40000.00
0334 1 52 (100-199)	SUPERPAVE ASPHALTIC CONCRETE, TRAFFIC B, PG76-22 100-199 TONS	TN	150	$800.00	$120000.00
0334 1 52 (200-300)	SUPERPAVE ASPHALTIC CONCRETE, TRAFFIC B, PG76-22 200-300 TONS	TN	250	$800.00	$200000.00
0334 1 52 (300+)	SUPERPAVE ASPHALTIC CONCRETE, TRAFFIC B, PG76-22 300 TONS OR MORE	TN	350	$800.00	$280000.00
0334 1 53 (0-99)	SUPERPAVE ASPHALTIC CONCRETE, TRAFFIC C, PG76-22 0-99 TONS	TN	50	$800.00	$40000.00
0334 1 53 (100-199)	SUPERPAVE ASPHALTIC CONCRETE, TRAFFIC C, PG76-22 100-199 TONS	TN	150	$800.00	$120000.00
0334 1 53 (200-300)	SUPERPAVE ASPHALTIC CONCRETE, TRAFFIC C, PG76-22 200-300 TONS	TN	250	$800.00	$200000.00
0334 1 53 (300+)	SUPERPAVE ASPHALTIC CONCRETE, TRAFFIC C, PG76-22 300 TONS OR MORE	TN	350	$800.00	$280000.00
0334 1 54 (0-99)	SUPERPAVE ASPHALTIC CONCRETE, TRAFFIC D, PG76-22 0-99 TONS	TN	50	$800.00	$40000.00
0334 1 54 (100-199)	SUPERPAVE ASPHALTIC CONCRETE, TRAFFIC D, PG76-22 100-199 TONS	TN	150	$800.00	$120000.00
0334 1 54 (200-300)	SUPERPAVE ASPHALTIC CONCRETE, TRAFFIC D, PG76-22 200-300 TONS	TN	250	$800.00	$200000.00
0334 1 54 (300+)	SUPERPAVE ASPHALTIC CONCRETE, TRAFFIC D, PG76-22 300 TONS OR MORE	TN	350	$800.00	$280000.00
0334 1 56 (1-99)	SUPERPAVE ASPHALTIC CONCRETE, TRAFFIC B, HIGH POLYMER 0-99 TONS	TN	50	$800.00	$40000.00

0334 1 56 (100-199)	SUPERPAVE ASPHALTIC CONCRETE, TRAFFIC B, HIGH POLYMER 100-199 TONS	TN	150	$800.00	$120000.00
0334 1 56 (200-300)	SUPERPAVE ASPHALTIC CONCRETE, TRAFFIC B, HIGH POLYMER 200-300 TONS	TN	250	$800.00	$200000.00
0334 1 56 (300+)	SUPERPAVE ASPHALTIC CONCRETE, TRAFFIC B, HIGH POLYMER 300 TONS OR MORE	TN	350	$800.00	$280000.00
0334 1 57 (0-99)	SUPERPAVE ASPHALTIC CONCRETE, TRAFFIC C, HIGH POLYMER 0-99 TONS	TN	50	$800.00	$40000.00
0334 1 57 (100-199)	SUPERPAVE ASPHALTIC CONCRETE, TRAFFIC C, HIGH POLYMER 100-199 TONS	TN	150	$800.00	$120000.00
0334 1 57 (200-300)	SUPERPAVE ASPHALTIC CONCRETE, TRAFFIC C, HIGH POLYMER 200-300 TONS	TN	250	$800.00	$200000.00
0334 1 57 (300+)	SUPERPAVE ASPHALTIC CONCRETE, TRAFFIC C, HIGH POLYMER 300 TONS OR MORE	TN	350	$800.00	$280000.00
0334 1 58 (0-99)	SUPERPAVE ASPHALTIC CONCRETE, TRAFFIC D, HIGH POLYMER 0-99 TONS	TN	50	$800.00	$40000.00
0334 1 58 (100-199)	SUPERPAVE ASPHALTIC CONCRETE, TRAFFIC D, HIGH POLYMER 100-199 TONS	TN	150	$800.00	$120000.00
0334 1 58 (200-300)	SUPERPAVE ASPHALTIC CONCRETE, TRAFFIC D, HIGH POLYMER 200-300 TONS	TN	250	$800.00	$200000.00
0334 1 58 (300+)	SUPERPAVE ASPHALTIC CONCRETE, TRAFFIC D, HIGH POLYMER 300 TONS OR MORE	TN	350	$800.00	$280000.00
0337 7 80 (0-99)	ASPHALT CONCRETE FRICTION COURSE,TRAFFIC B, FC-9.5, PG 76-22 0-99 TONS	TN	50	$500.00	$25000.00
0337 7 80 (100-199)	ASPHALT CONCRETE FRICTION COURSE,TRAFFIC B, FC-9.5, PG 76-22 100-199 TONS	TN	150	$500.00	$75000.00
0337 7 80 (200-300)	ASPHALT CONCRETE FRICTION COURSE,TRAFFIC B, FC-9.5, PG 76-22 200-300 TONS	TN	250	$500.00	$125000.00
0337 7 80 (300+)	ASPHALT CONCRETE FRICTION COURSE,TRAFFIC B, FC-9.5, PG 76-22 300 TONS OR MORE	TN	350	$500.00	$175000.00
0337 7 81 (0-99)	ASPHALT CONCRETE FRICTION COURSE,TRAFFIC B, FC-12.5, PG 76-22 0-99 TONS	TN	50	$500.00	$25000.00

0337 7 81 (100-199)	ASPHALT CONCRETE FRICTION COURSE,TRAFFIC B, FC-12.5, PG 76-22 100-199 TONS	TN	150	$500.00	$75000.00
0337 7 81 (200-300)	ASPHALT CONCRETE FRICTION COURSE,TRAFFIC B, FC-12.5, PG 76-22 200-300 TONS	TN	250	$500.00	$125000.00
0337 7 81 (300+)	ASPHALT CONCRETE FRICTION COURSE,TRAFFIC B, FC-12.5, PG 76-22 300 TONS OR MORE	TN	350	$500.00	$175000.00
0337 7 82 (0-99)	ASPHALT CONCRETE FRICTION COURSE,TRAFFIC C, FC-9.5, PG 76-22 0-99 TONS	TN	50	$500.00	$25000.00
0337 7 82 (100-199)	ASPHALT CONCRETE FRICTION COURSE,TRAFFIC C, FC-9.5, PG 76-22 100-199 TONS	TN	150	$500.00	$75000.00
0337 7 82 (200-300)	ASPHALT CONCRETE FRICTION COURSE,TRAFFIC C, FC-9.5, PG 76-22 200-300 TONS	TN	250	$500.00	$125000.00
0337 7 82 (300+)	ASPHALT CONCRETE FRICTION COURSE,TRAFFIC C, FC-9.5, PG 76-22 300 TONS OR MORE	TN	350	$500.00	$175000.00
0337 7 83 (0-99)	ASPHALT CONCRETE FRICTION COURSE,TRAFFIC C, FC-12.5, PG 76-22 0-99 TONS	TN	50	$500.00	$25000.00
0337 7 83 (100-199)	ASPHALT CONCRETE FRICTION COURSE,TRAFFIC C, FC-12.5, PG 76-22 100-199 TONS	TN	150	$500.00	$75000.00
0337 7 83 (200-300)	ASPHALT CONCRETE FRICTION COURSE,TRAFFIC C, FC-12.5, PG 76-22 200-300 TONS	TN	250	$500.00	$125000.00
0337 7 83 (300+)	ASPHALT CONCRETE FRICTION COURSE,TRAFFIC C, FC-12.5, PG 76-22 300 TONS OR MORE	TN	350	$500.00	$175000.00
0337 7 85 (0-99)	ASPHALT CONCRETE FRICTION COURSE,TRAFFIC D, FC-12.5, PG 76-22 0-99 TONS	TN	50	$500.00	$25000.00
0337 7 85 (100-199)	ASPHALT CONCRETE FRICTION COURSE,TRAFFIC D, FC-12.5, PG 76-22 100-199 TONS	TN	150	$500.00	$75000.00
0337 7 85 (200-300)	ASPHALT CONCRETE FRICTION COURSE,TRAFFIC D, FC-12.5, PG 76-22 200-300 TONS	TN	250	$500.00	$125000.00
0337 7 85 (300+)	ASPHALT CONCRETE FRICTION COURSE,TRAFFIC D, FC-12.5, PG 76-22 300 TONS OR MORE	TN	350	$500.00	$175000.00
0337 7 90 (0-99)	ASPHALT CONCRETE FRICTION COURSE,TRAFFIC B, FC-9.5, HIGH POLYMER 0-99 TONS	TN	50	$500.00	$25000.00

0337 7 90 (100-199)	ASPHALT CONCRETE FRICTION COURSE,TRAFFIC B, FC-9.5, HIGH POLYMER 100-199 TONS	TN	150	$500.00	$75000.00
0337 7 90 (200-300)	ASPHALT CONCRETE FRICTION COURSE,TRAFFIC B, FC-9.5, HIGH POLYMER 200-300 TONS	TN	250	$500.00	$125000.00
0337 7 90 (300+)	ASPHALT CONCRETE FRICTION COURSE,TRAFFIC B, FC-9.5, HIGH POLYMER 300 TONS OR MORE	TN	350	$500.00	$175000.00
0337 7 93 (0-99)	ASPHALT CONCRETE FRICTION COURSE,TRAFFIC C, FC-12.5, HIGH POLYMER 0-99 TONS	TN	50	$500.00	$25000.00
0337 7 93 (100-199)	ASPHALT CONCRETE FRICTION COURSE,TRAFFIC C, FC-12.5, HIGH POLYMER 100-199 TONS	TN	150	$500.00	$75000.00
0337 7 93 (200-300)	ASPHALT CONCRETE FRICTION COURSE,TRAFFIC C, FC-12.5, HIGH POLYMER 200-300 TONS	TN	250	$500.00	$125000.00
0337 7 93 (300+)	ASPHALT CONCRETE FRICTION COURSE,TRAFFIC C, FC-12.5, HIGH POLYMER 300 TONS OR MORE	TN	350	$500.00	$175000.00
0337 7 94 (0-99)	ASPHALT CONCRETE FRICTION COURSE,TRAFFIC D, FC-12.5, HIGH POLYMER 0-99 TONS	TN	50	$500.00	$25000.00
0337 7 94 (100-199)	ASPHALT CONCRETE FRICTION COURSE,TRAFFIC D, FC-12.5, HIGH POLYMER 100-199 TONS	TN	150	$500.00	$75000.00
0337 7 94 (200-300)	ASPHALT CONCRETE FRICTION COURSE,TRAFFIC D, FC-12.5, HIGH POLYMER 200-300 TONS	TN	250	$500.00	$125000.00
0337 7 94 (300+)	ASPHALT CONCRETE FRICTION COURSE,TRAFFIC D, FC-12.5, HIGH POLYMER 300 TONS OR MORE	TN	350	$500.00	$175000.00
0339 1	MISCELLANEOUS ASPHALT PAVEMENT	TN	25	$800.00	$20000.00
0350 3 5	PLAIN CEMENT CONCRETE PAVEMENT, 8"	SY	100	$360.00	$36000.00
0350 3 9	PLAIN CEMENT CONCRETE PAVEMENT, 10"	SY	100	$420.00	$42000.00
0350 3 13	PLAIN CEMENT CONCRETE PAVEMENT, 12"	SY	100	$600.00	$60000.00
0350 5	CLEANING & SEALING JOINTS- CONCRETE PAVEMENT:	LF	100	$150.00	$15000.00

0350 30 13	CONCRETE PAVEMENT FOR ROUNDABOUT APRON, 12" DEPTH	SY	100	$600.00	$60000.00
0352 70	GRINDING CONCRETE PAVEMENT	SY	100	$150.00	$15000.00
0400 0 11	CONCRETE CLASS NS, GRAVITY WALL	CY	10	$4,000.00	$40000.00
0400 1 2	CONCRETE CLASS I, ENDWALLS	CY	10	$3,500.00	$35000.00
0400 1 11	CONCRETE CLASS I, RETAINING WALLS	CY	10	$4,500.00	$45000.00
0400 2 1	CONCRETE CLASS II, CULVERTS	CY	10	$4,000.00	$40000.00
0400 2 2	CONCRETE CLASS II, ENDWALLS	CY	10	$4,000.00	$40000.00
0400 2 5	CONCRETE CLASS II, BRIDGE SUBSTRUCTURE	CY	10	$5,000.00	$50000.00
0400 2 11	CONCRETE CLASS II, RETAINING WALLS	CY	10	$5,000.00	$50000.00
0400 3 1	CONCRETE CLASS III, CULVERTS	CY	10	$4,500.00	$45000.00
0400 3 8	CONCRETE CLASS III, BULKHEAD	CY	10	$4,500.00	$45000.00
0400 4 1	CONCRETE CLASS IV, CULVERTS	CY	10	$4,500.00	$45000.00
0400 4 2	CONCRETE CLASS IV, ENDWALLS	CY	10	$4,500.00	$45000.00
0400 4 5	CONCRETE CLASS IV, BRIDGE SUBSTRUCTURE	CY	10	$7,500.00	$75000.00
0400 4 11	CONC CLASS IV, RETAINING WALLS	CY	10	$7,500.00	$75000.00
0400 145	CLEANING CONCRETE SURFACE	SF	20	$200.00	$4000.00

0401 70 1	RESTORE SPALLED AREAS, EPOXY	CF	10	$1,250.00	$12500.00
0401 70 4	RESTORE SPALLED AREAS, PORTLAND CEMENT GROUT	CF	10	$1,250.00	$12500.00
0401 70 5	RESTORE SPALLED AREAS, CONTRACTORS OPTION	CF	10	$1,250.00	$12500.00
0411 1	EPOXY MATERIAL FOR CRACK INJECTION- STRUCTURES REHAB	GA	10	$125.00	$1250.00
0411 2	CRACKS INJECT & SEAL- STRUCTURES REHAB	LF	25	$200.00	$5000.00
413-149	PENETRANT SEALER	GA	10	$150.00	$1500.00
413-154	CLEANING & SEALING CONCRETE SURFACES- PENETRANT SEALER OR METHACRYLATES	SF	25	$500.00	$12500.00
0415 1 1	REINFORCING STEEL- ROADWAY	LB	100	$25.00	$2500.00
0415 1 3	REINFORCING STEEL- RETAINING WALL	LB	100	$50.00	$5000.00
0415 1 5	REINFORCING STEEL- BRIDGE SUBSTRUCTURE	LB	100	$150.00	$15000.00
0415 1 6	REINFORCING STEEL- MISCELLANEOUS	LB	100	$50.00	$5000.00
0415 1 8	REINFORCING STEEL- BULKHEAD	LB	100	$150.00	$15000.00
0425 1201	INLETS, CURB, TYPE 9, <10'	EA	3	$15,000.00	$45000.00
0425 1202	INLETS, CURB, TYPE 9, >10'	EA	3	$20,000.00	$60000.00
0425 1203	INLETS, CURB, TYPE 9, J BOT, <10'	EA	3	$20,000.00	$60000.00
0425 1204	INLETS, CURB, TYPE 9, J BOT, >10'	EA	3	$25,000.00	$75000.00

0425 1205	INLETS, CURB, TYPE 9, PARTIAL	EA	3	$7,500.00	$22500.00
0425 1209	INLETS, CURB, TYPE 9, MODIFY	EA	3	$10,000.00	$30000.00
0425 1211	INLETS, CURB, TYPE 10, <10'	EA	3	$15,000.00	$45000.00
0425 1212	INLETS, CURB, TYPE 10, >10'	EA	3	$20,000.00	$60000.00
0425 1213	INLETS, CURB, TYPE 10, J BOT <10'	EA	3	$20,000.00	$60000.00
0425 1214	INLETS, CURB, TYPE 10, J BOT >10'	EA	3	$25,000.00	$75000.00
0425 1215	INLETS, CURB, TYPE 10, PARTIAL	EA	3	$7,500.00	$22500.00
0425 1311	INLETS, CURB, TYPE P-1, <10'	EA	3	$15,000.00	$45000.00
0425 1312	INLETS, CURB TYPE P-1, >10'	EA	3	$20,000.00	$60000.00
0425 1315	INLETS, CURB TYPE P-1, PARTIAL	EA	3	$12,000.00	$36000.00
0425 1319	INLETS, CURB TYPE P-1, MODIFY	EA	3	$10,000.00	$30000.00
0425 1321	INLETS, CURB, TYPE P-2, <10'	EA	3	$15,000.00	$45000.00
0425 1322	INLETS, CURB, TYPE P-2, >10'	EA	3	$20,000.00	$60000.00
0425 1325	INLETS, CURB, TYPE P-2, PARTIAL	EA	3	$12,000.00	$36000.00
0425 1329	INLETS, CURB TYPE P-2, MODIFY	EA	3	$10,000.00	$30000.00
0425 1331	INLETS, CURB, TYPE P-3, <10'	EA	3	$15,000.00	$45000.00

0425 1332	INLETS, CURB. TYPE P-3, >10'	EA	3	$20,000.00	$60000.00
0425 1335	INLETS, CURB, TYPE P-3, PARTIAL	EA	3	$12,000.00	$36000.00
0425 1341	INLETS, CURB, TYPE P-4, <10'	EA	3	$15,000.00	$45000.00
0425 1342	INLETS, CURB, TYPE P-4, >10'	EA	3	$20,000.00	$60000.00
0425 1345	INLETS, CURB, TYPE P-4, PARTIAL	EA	3	$12,000.00	$36000.00
0425 1349	INLETS, CURB, TYPE P-4, MODIFY	EA	3	$10,000.00	$30000.00
0425 1351	INLETS, CURB, TYPE P-5, <10'	EA	3	$15,000.00	$45000.00
0425 1352	INLETS, CURB, TYPE P-5, >10'	EA	3	$20,000.00	$60000.00
0425 1355	INLETS, CURB, TYPE P-5, PARTIAL	EA	3	$12,000.00	$36000.00
0425 1359	INLETS, CURB, TYPE P-5, MODIFY	EA	3	$10,000.00	$30000.00
0425 1361	INLETS, CURB, TYPE P-6, <10'	EA	3	$15,000.00	$45000.00
0425 1362	INLETS, CURB, TYPE P-6, >10'	EA	3	$20,000.00	$60000.00
0425 1365	INLETS, CURB, TYPE P-6, PARTIAL	EA	3	$12,000.00	$36000.00
0425 1369	INLETS, CURB, TYPE P-6, MODIFY	EA	3	$10,000.00	$30000.00
0425 1411	INLETS, CURB TYPE J-1, <10'	EA	3	$17,500.00	$52500.00
0425 1412	INLETS, CURB, TYPE J-1, >10'	EA	3	$25,000.00	$75000.00

0425 1415	INLETS, CURB, TYPE J-1, PARTIAL	EA	3	$15,000.00	$45000.00
0425 1419	INLETS, CURB, TYPE J-1, MODIFY	EA	3	$12,000.00	$36000.00
0425 1421	INLETS, CURB, TYPE J-2, <10'	EA	3	$18,000.00	$54000.00
0425 1422	INLETS, CURB, TYPE J-2, >10'	EA	3	$26,000.00	$78000.00
0425 1425	INLETS, CURB, TYPE J-2, PARTIAL	EA	3	$15,000.00	$45000.00
0425 1429	INLETS, CURB, TYPE J-2, MODIFY	EA	3	$12,000.00	$36000.00
0425 1431	INLETS, CURB, TYPE J-3, <10'	EA	3	$25,000.00	$75000.00
0425 1432	INLETS, CURB, TYPE J-3, >10'	EA	3	$30,000.00	$90000.00
0425 1435	INLETS, CURB, TYPE J-3, PARTIAL	EA	3	$20,000.00	$60000.00
0425 1441	INLETS, CURB, TYPE J-4, <10'	EA	3	$28,000.00	$84000.00
0425 1442	INLETS, CURB, TYPE J-4, >10'	EA	3	$32,000.00	$96000.00
0425 1445	INLETS, CURB, TYPE J-4, PARTIAL	EA	3	$20,000.00	$60000.00
0425 1451	INLETS, CURB, TYPE J-5, <10'	EA	3	$28,000.00	$84000.00
0425 1452	INLETS, CURB, TYPE J-5, >10'	EA	3	$32,000.00	$96000.00
0425 1455	INLETS, CURB, TYPE J-5, PARTIAL	EA	3	$20,000.00	$60000.00
0425 1459	INLETS, CURB, TYPE J-5, MODIFY	EA	3	$18,000.00	$54000.00

0425 1461	INLETS, CURB, TYPE J-6, <10'	EA	3	$28,000.00	$84000.00
0425 1462	INLETS, CURB, TYPE J-6, >10'	EA	3	$32,000.00	$96000.00
0425 1465	INLETS, CURB, TYPE J-6, PARTIAL	EA	3	$20,000.00	$60000.00
0425 1469	INLETS, CURB, TYPE J-6, MODIFY	EA	3	$18,000.00	$54000.00
0425 1471	INLETS, CURB, TYPE 7, <10'	EA	3	$15,000.00	$45000.00
0425 1472	INLETS, CURB, TYPE 7, >10'	EA	3	$20,000.00	$60000.00
0425 1473	INLETS, CURB, TYPE 7, J BOT , <10'	EA	3	$15,000.00	$45000.00
0425 1474	INLETS, CURB, TYPE 7, J BOT ,>10'	EA	3	$20,000.00	$60000.00
0425 1475	INLETS, CURB, TYPE 7, PARTIAL	EA	3	$12,000.00	$36000.00
0425 1479	INLETS, CURB, TYPE 7, MODIFY	EA	3	$10,000.00	$30000.00
0425 1481	INLETS, CURB, TYPE 8, <10'	EA	3	$15,000.00	$45000.00
0425 1483	INLETS, CURB, TYPE 8, J BOT , <10'	EA	3	$15,000.00	$45000.00
0425 1484	INLETS, CURB, TYPE 8, J BOT ,>10'	EA	3	$20,000.00	$60000.00
0425 1485	INLETS, CURB, TYPE 8, PARTIAL	EA	3	$12,000.00	$36000.00
0425 1489	INLETS, CURB, TYPE 8, MODIFY	EA	3	$10,000.00	$30000.00
0425 1501	INLETS, DT BOT, TYPE A, <10'	EA	3	$12,000.00	$36000.00

0425 1502	INLETS, DT BOT, TYPE A, >10'	EA	3	$15,000.00	$45000.00
0425 1503	INLETS, DT BOT, TYPE A, J BOT, <10'	EA	3	$15,000.00	$45000.00
0425 1504	INLETS, DT BOT, TYPE A, J BOT, >10'	EA	3	$18,000.00	$54000.00
0425 1505	INLETS, DT BOT, TYPE A, PARTIAL	EA	3	$10,000.00	$30000.00
0425 1511	INLETS, DT BOT, TYPE B, <10'	EA	3	$15,000.00	$45000.00
0425 1512	INLETS, DT BOT, TYPE B, >10'	EA	3	$18,000.00	$54000.00
0425 1513	INLETS, DT BOT, TYPE B, J BOT, <10'	EA	3	$18,000.00	$54000.00
0425 1514	INLETS, DT BOT, TYPE B, J BOT, >10'	EA	3	$25,000.00	$75000.00
0425 1515	INLETS, DT BOT, TYPE B, PARTIAL	EA	3	$15,000.00	$45000.00
0425 1519	INLETS, DT BOT, TYPE B, MODIFY	EA	3	$12,000.00	$36000.00
0425 1521	INLETS, DT BOT, TYPE C,<10'	EA	3	$12,000.00	$36000.00
0425 1522	INLETS, DT BOT, TYPE C,>10'	EA	3	$15,000.00	$45000.00
0425 1523	INLETS, DT BOT, TYPE C,JBOT, <10'	EA	3	$15,000.00	$45000.00
0425 1524	INLETS, DT BOT, TYPE C, JBOT, >10'	EA	3	$18,000.00	$54000.00
0425 1525	INLETS, DITCH BOTTOM, TYPE C, PARTIAL	EA	3	$10,000.00	$30000.00
0425 1529	INLETS, DT BOT, TYPE C, MODIFY	EA	3	$10,000.00	$30000.00

0425 1531	INLETS, DITCH BOTTOM, TYPE C MODIFIED- BACK OF SIDEWALK, <10'	EA	3	$15,000.00	$45000.00
0425 1532	INLETS, DITCH BOTTOM, TYPE C MODIFIED- BACK OF SIDEWALK, >10'	EA	3	$18,000.00	$54000.00
0425 1533	INLETS, DITCH BOTTOM TYPE C MODIFIED- BACK OF SIDEWALK, J BOT, <10'	EA	3	$20,000.00	$60000.00
0425 1534	INLETS, DITCH BOTTOM, TYPE C MODIFIED- BACK OF SIDEWALK, J BOT, >10'	EA	3	$22,000.00	$66000.00
0425 1535	INLETS, DITCH BOTTOM TYPE C MODIFIED- BACK OF SIDEWALK, PARTIAL	EA	3	$12,000.00	$36000.00
0425 1541	INLETS, DT BOT, TYPE D, <10'	EA	3	$10,000.00	$30000.00
0425 1542	INLETS, DT BOT, TYPE D, >10'	EA	3	$15,000.00	$45000.00
0425 1543	INLETS, DITCH BOTTOM, TYPE D, J BOT, <10'	EA	3	$15,000.00	$45000.00
0425 1544	INLETS, DITCH BOTTOM, TYPE D, J BOT, >10'	EA	3	$18,000.00	$54000.00
0425 1545	INLETS, DITCH BOTTOM, TYPE D, PARTIAL	EA	3	$12,000.00	$36000.00
0425 1549	INLETS, DT BOT, TYPE D, MODIFY	EA	3	$10,000.00	$30000.00
0425 1551	INLETS, DT BOT, TYPE E, <10'	EA	3	$12,000.00	$36000.00
0425 1552	INLETS, DT BOT, TYPE E, >10'	EA	3	$15,000.00	$45000.00
0425 1553	INLETS, DT BOT, TYPE E, J BOT, <10'	EA	3	$15,000.00	$45000.00
0425 1554	INLETS, DT BOT, TYPE E, J BOT, >10'	EA	3	$18,000.00	$54000.00
0425 1555	INLETS, DT BOT, TYPE E, PARTIAL	EA	3	$12,000.00	$36000.00

0425 1559	INLETS, DT BOT, TYPE E, MODIFY	EA	3	$10,000.00	$30000.00
0425 1561	INLETS, DT BOT, TYPE F, <10'	EA	3	$12,000.00	$36000.00
0425 1562	INLETS, DT BOT, TYPE F, >10'	EA	3	$15,000.00	$45000.00
0425 1563	INLETS, DITCH BOTTOM, TYPE F, J BOT, <10'	EA	3	$15,000.00	$45000.00
0425 1564	INLETS, DITCH BOTTOM, TYPE F, J BOT, >10'	EA	3	$18,000.00	$54000.00
0425 1565	INLETS, DITCH BOTTOM, TYPE F, PARTIAL	EA	3	$12,000.00	$36000.00
0425 1569	INLETS, DITCH BOTTOM, TYPE F, MODIFY	EA	3	$10,000.00	$30000.00
0425 1571	INLETS, DITCH BOTTOM, TYPE G, <10'	EA	3	$12,000.00	$36000.00
0425 1572	INLETS, DITCH BOTTOM, TYPE G, >10'	EA	3	$15,000.00	$45000.00
0425 1573	INLETS, DITCH BOTTOM, TYPE G, J BOT, <10'	EA	3	$15,000.00	$45000.00
0425 1574	INLETS, DITCH BOTTOM, TYPE G, J BOT, >10'	EA	3	$18,000.00	$54000.00
0425 1575	INLETS, DITCH BOTTOM, TYPE G, PARTIAL	EA	3	$12,000.00	$36000.00
0425 1579	INLETS, DITCH BOTTOM, TYPE G, MODIFY	EA	3	$10,000.00	$30000.00
0425 1581	INLETS, DT BOT, TYPE H, <10'	EA	3	$18,000.00	$54000.00
0425 1582	INLETS, DT BOT, TYPE H, >10'	EA	3	$30,000.00	$90000.00
0425 1583	INLETS, DT BOT, TYPE H, J BOTTOM <10'	EA	3	$20,000.00	$60000.00

0425 1584	INLETS, DT BOT, TYPE H, J BOTTOM >10'	EA	3	$35,000.00	$105000.00
0425 1585	INLETS, DT BOT, TYPE H, PARTIAL	EA	3	$15,000.00	$45000.00
0425 1589	INLETS, DT BOT, TYPE H, MODIFY	EA	3	$12,000.00	$36000.00
0425 1601	INLETS, DT BOT, TYPE J, <10'	EA	3	$18,000.00	$54000.00
0425 1602	INLETS, DT BOT, TYPE J, >10'	EA	3	$20,000.00	$60000.00
0425 1603	INLETS, DT BOT, TYPE J, J BOT, <10'	EA	3	$20,000.00	$60000.00
0425 1604	INLETS, DT BOT, TYPE J, JBOT,>10'	EA	3	$25,000.00	$75000.00
0425 1605	INLETS, DT BOT, TYPE J, PARTIAL	EA	3	$15,000.00	$45000.00
0425 1609	INLETS, DT BOT, TYPE J, MODIFY	EA	3	$12,000.00	$36000.00
0425 1611	INLETS, DITCH BOTTOM, TYPE K, <10'	EA	3	$18,000.00	$54000.00
0425 1619	INLETS, DITCH BOTTOM, TYPE K, J BOTTOM, MODIFY	EA	3	$15,000.00	$45000.00
0425 1701	INLETS, GUTTER, TYPE S, <10'	EA	3	$15,000.00	$45000.00
0425 1702	INLETS, GUTTER, TYPE S, >10'	EA	3	$18,000.00	$54000.00
0425 1703	INLETS, GUTTER, TYPE S, J BOTTOM <10'	EA	3	$18,000.00	$54000.00
0425 1704	INLETS, GUTTER, TYPE S, J BOTTOM, >10'	EA	3	$20,000.00	$60000.00
0425 1705	INLETS, GUTTER, TYPE S, PARTIAL	EA	3	$12,000.00	$36000.00

0425 1711	INLETS, GUTTER, TYPE V, <10'	EA	3	$15,000.00	$45000.00
0425 1712	INLETS, GUTTER, TYPE V, >10'	EA	3	$18,000.00	$54000.00
0425 1713	INLETS, GUTTER, TYPE V, J BOT, <10'	EA	3	$18,000.00	$54000.00
0425 1714	INLETS, GUTTER, TYPE V, J BOTTOM, >10'	EA	3	$20,000.00	$60000.00
0425 1715	INLETS, GUTTER, TYPE V, PARTIAL	EA	3	$12,000.00	$36000.00
0425 1719	INLETS, GUTTER, TYPE V, MODIFY	EA	3	$10,000.00	$30000.00
0425 1910	INLETS, CLOSED FLUME	EA	3	$12,000.00	$36000.00
0425 2 41	MANHOLES, P-7, <10'	EA	3	$13,500.00	$40500.00
0425 2 42	MANHOLES, P-7, >10'	EA	3	$19,500.00	$58500.00
0425 2 43	MANHOLES, P-7, PARTIAL	EA	3	$10,000.00	$30000.00
0425 2 61	MANHOLES, P-8, <10'	EA	3	$13,500.00	$40500.00
0425 2 62	MANHOLES, P-8, >10'	EA	3	$19,500.00	$58500.00
0425 2 63	MANHOLES, P-8, PARTIAL	EA	3	$10,000.00	$30000.00
0425 2 71	MANHOLES, J-7, <10'	EA	3	$15,500.00	$46500.00
0425 2 72	MANHOLES, J-7, >10'	EA	3	$25,000.00	$75000.00
0425 2 73	MANHOLES, J-7, PARTIAL	EA	3	$12,000.00	$36000.00

0425 2 91	MANHOLES, J-8, <10'	EA	3	$16,500.00	$49500.00
0425 2 92	MANHOLES, J-8, >10'	EA	3	$27,500.00	$82500.00
0425 2 93	MANHOLES, J-8, PARTIAL	EA	3	$15,000.00	$45000.00
0425 2110	MANHOLES, REPAIR	EA	3	$5,500.00	$16500.00
0425 3 41	JUNCTION BOX, DRAINAGE, P-7, <10'	EA	3	$12,000.00	$36000.00
0425 3 42	JUNCTION BOXES, P-7, >10'	EA	3	$15,000.00	$45000.00
0425 3 43	JUNCTION BOX, DRAINAGE, P-7, PARTIAL	EA	3	$10,000.00	$30000.00
0425 3 50	JUNCTION BOX, DRAINAGE, REPAIR	EA	3	$8,500.00	$25500.00
0425 3 61	JUNCTION BOXES, J-7, <10'	EA	3	$12,000.00	$36000.00
0425 3 62	JUNCTION BOXES, J-7, >10'	EA	3	$15,000.00	$45000.00
0425 3 63	JUNCTION BOXES, DRAINAGE, J-7, PARTIAL	EA	3	$10,000.00	$30000.00
0425 4	INLETS, ADJUST	EA	3	$2,850.00	$8550.00
0425 5	MANHOLE, ADJUST	EA	3	$2,680.00	$8040.00
0425 6	VALVE BOXES, ADJUST	EA	3	$2,500.00	$7500.00
0425 7	MANHOLE COVER- REPLACE	EA	3	$2,500.00	$7500.00
0425 8	DRAINAGE STRUCTURES, MISCELLANEOUS, ADJUST	EA	3	$6,450.00	$19350.00

0425 11	MODIFY EXISTING DRAINAGE STRUCTURE	EA	3	$5,000.00	$15000.00
0425 14 1	GRATE FOR EXISTING DRAINAGE STRUCTURE, FURNISH AND INSTALL	SF	3	$2,500.00	$7500.00
0425 15 41	INLET TOP, REPAIR, CURB INLET	EA	3	$6,500.00	$19500.00
0425 15 42	INLET TOP, REPAIR, DITCH BOTTOM INLET	EA	3	$5,500.00	$16500.00
0425 15 51	INLET TOP, REPLACE, CURB INLET	EA	3	$8,500.00	$25500.00
0425 15 52	INLET TOP, REPLACE, DITCH BOTTOM INLET	EA	3	$7,500.00	$22500.00
0425 16 11	DRAINAGE MANHOLE- REPLACE TOP AND RIM	EA	3	$5,500.00	$16500.00
0425 82	REPLACE GRATE	EA	3	$3,000.00	$9000.00
0430 94 1	DESILTING PIPE, 0 - 24"	LF	50	$30.00	$1500.00
0430 94 2	DESILTING PIPE, 25 - 36"	LF	50	$40.00	$2000.00
430173112	PIPE CULVERT OPTIONAL MATERIAL, ROUND, 12", GUTTER DRAIN	LF	50	$300.00	$15000.00
430173115	PIPE CULVERT OPTIONAL MATERIAL, ROUND, 15", GUTTER DRAIN	LF	50	$325.00	$16250.00
430173118	PIPE CULVERT OPTIONAL MATERIAL, ROUND, 18", GUTTER DRAIN	LF	50	$350.00	$17500.00
430173124	PIPE CULVERT OPTIONAL MATERIAL, ROUND, 24", GUTTER DRAIN	LF	50	$375.00	$18750.00
430173130	PIPE CULVERT OPTIONAL MATERIAL, ROUND, 30", GUTTER DRAIN	LF	50	$400.00	$20000.00
430173136	PIPE CULVERT OPTIONAL MATERIAL, ROUND, 36", GUTTER DRAIN	LF	50	$425.00	$21250.00

430173142	PIPE CULVERT, OPTIONAL MATERIAL, ROUND, 42", GUTTER DRAIN	LF	50	$450.00	$22500.00
430173148	PIPE CULVERT, OPTIONAL MATERIAL, ROUND, 48" GUTTER DRAIN	LF	50	$475.00	$23750.00
430173218	PIPE CULVERT OPTIONAL MATERIAL, OTHER/ELLIPTICAL, 18", GUTTER DRAIN	LF	50	$500.00	$25000.00
430174112	PIPE CULVERT, OPTIONAL MATERIAL, ROUND, 12"SD	LF	50	$150.00	$7500.00
430174115	PIPE CULVERT, OPTIONAL MATERIAL, ROUND, 15"SD	LF	50	$177.00	$8850.00
430174118	PIPE CULVERT, OPTIONAL MATERIAL, ROUND, 18"SD	LF	50	$215.00	$10750.00
430174124	PIPE CULVERT, OPTIONAL MATERIAL, ROUND, 24"SD	LF	50	$235.00	$11750.00
430174130	PIPE CULVERT, OPTIONAL MATERIAL, ROUND, 30"SD	LF	50	$290.00	$14500.00
430174142	PIPE CULVERT, OPTIONAL MATERIAL, ROUND, 42"SD	LF	50	$390.00	$19500.00
430174148	PIPE CULVERT, OPTIONAL MATERIAL, ROUND, 48"SD	LF	50	$525.00	$26250.00
430174154	PIPE CULVERT, OPTIONAL MATERIAL, ROUND, 54"SD	LF	50	$825.00	$41250.00
430174160	PIPE CULVERT, OPTIONAL MATERIAL, ROUND, 60"SD	LF	50	$1,025.00	$51250.00
430174172	PIPE CULVERT, OPTIONAL MATERIAL, ROUND, 72"SD	LF	50	$1,300.00	$65000.00
430174215	PIPE CULVERT, OPTIONAL MATERIAL, OTHER SHAPE - ELLIP/ARCH, 15"SD	LF	50	$180.00	$9000.00
430174218	PIPE CULVERT, OPTIONAL MATERIAL, OTHER SHAPE - ELLIP/ARCH, 18"SD	LF	50	$225.00	$11250.00
430174224	PIPE CULVERT, OPTIONAL MATERIAL, OTHER SHAPE - ELLIP/ARCH, 24"SD	LF	50	$300.00	$15000.00

430174230	PIPE CULVERT, OPTIONAL MATERIAL, OTHER SHAPE - ELLIP/ARCH, 30"SD	LF	50	$430.00	$21500.00
430174236	PIPE CULVERT, OPTIONAL MATERIAL, OTHER SHAPE - ELLIP/ARCH, 36"SD	LF	50	$595.00	$29750.00
430174242	PIPE CULVERT, OPTIONAL MATERIAL, ELLIP/OTHER, 42"SD	LF	50	$805.00	$40250.00
430174248	PIPE CULVERT,OPTIONAL MATERIAL,OTHER-ELIP/ARCH, 48"SD	LF	50	$985.00	$49250.00
430175112	PIPE CULVERT,OPTIONAL MATERIAL,ROUND, 12"S/CD	LF	50	$150.00	$7500.00
430175115	PIPE CULVERT,OPTIONAL MATERIAL,ROUND, 15"S/CD	LF	50	$200.00	$10000.00
430175118	PIPE CULVERT, OPTIONAL MATERIAL, ROUND, 18"S/CD	LF	250	$230.00	$57500.00
430175124	PIPE CULVERT, OPTIONAL MATERIAL, ROUND, 24"S/CD	LF	50	$250.00	$12500.00
430175130	PIPE CULVERT, OPT MATERIAL, ROUND, 30"S/CD	LF	50	$310.00	$15500.00
430175136	PIPE CULVERT, OPT MATERIAL, ROUND, 36"S/CD	LF	50	$330.00	$16500.00
430175140	PIPE CULVERT, OPT MATERIAL, ROUND, 40"S/CD	LF	50	$360.00	$18000.00
430175142	PIPE CULVERT, OPT MATERIAL, ROUND, 42"S/CD	LF	50	$400.00	$20000.00
430175148	PIPE CULVERT, OPT MATERIAL, ROUND, 48"S/CD	LF	50	$550.00	$27500.00
430175154	PIPE CULVERT, OPT MATERIAL, ROUND, 54"S/CD	LF	50	$850.00	$42500.00
430175160	PIPE CULVERT, OPT MATERIAL, ROUND, 60"S/CD	LF	50	$1,050.00	$52500.00
430175166	PIPE CULVERT, OPT MATERIAL, ROUND, 66"S/CD	LF	50	$1,250.00	$62500.00

430175172	PIPE CULVERT, OPT MATERIAL, ROUND, 72"S/CD	LF	50	$1,400.00	$70000.00
430175178	PIPE CULVERT, OPT MATERIAL, ROUND, 78" STORM/CROSS DRAIN	LF	50	$2,000.00	$100000.00
430175184	PIPE CULVERT, OPT MATERIAL, ROUND, 84"S/CD	LF	50	$3,000.00	$150000.00
430175196	PIPE CULVERT, OPT MATERIAL, ROUND, 96"S/CD	LF	50	$4,000.00	$200000.00
430175215	PIPE CULVERT,OPTIONAL MATERIAL,OTHER-ELIP/ARCH, 15"S/CD	LF	50	$200.00	$10000.00
430175218	PIPE CULVERT,OPTIONAL MATERIAL,OTHER-ELIP/ARCH, 18"S/CD	LF	50	$250.00	$12500.00
430175224	PIPE CULVERT,OPTIONAL MATERIAL,OTHER SHAPE-ELIP/ARCH, 24"S/CD	LF	50	$325.00	$16250.00
430175230	PIPE CULVERT, OPT MATERIAL, OTHER SHAPE - ELIP/ARCH, 30"S/CD	LF	50	$450.00	$22500.00
430175236	PIPE CULVERT, OPT MATERIAL, OTHER SHAPE - ELIP/ARCH, 36"S/CD	LF	50	$630.00	$31500.00
430175242	PIPE CULVERT, OPT MATERIAL, OTHER SHAPE - ELIP/ARCH, 42"S/CD	LF	50	$650.00	$32500.00
430175248	PIPE CULVERT, OPT MATERIAL, OTHER SHAPE - ELIP/ARCH, 48"S/CD	LF	50	$700.00	$35000.00
430175254	PIPE CULVERT, OPT MATERIAL, OTHER SHAPE - ELIP/ARCH, 54"S/CD	LF	50	$800.00	$40000.00
430175260	PIPE CULVERT, OPT MATERIAL, OTHER SHAPE - ELIP/ARCH, 60"S/CD	LF	50	$900.00	$45000.00
430175266	PIPE CULVERT, OPT MATERIAL, OTHER SHAPE - ELIP/ARCH, 66"S/CD	LF	50	$1,000.00	$50000.00
430175272	PIPE CULVERT, OPT MATERIAL, OTHER SHAPE - ELIP/ARCH, 72"S/CD	LF	50	$1,200.00	$60000.00
430175299	PIPE CULVERT,OPTIONAL MATERIAL,OTHER SHAPE-ELIP/ARCH, 99" OR >, S/CD	LF	50	$2,000.00	$100000.00

430185118	PIPE CULVERT,OPTIONAL MATERIAL,ROUND, JACK & BORE, 18" , STORM AND CROSS DRAIN	LF	50	$1,800.00	$90000.00
430185124	PIPE CULVERT,OPTIONAL MATERIAL,ROUND, JACK & BORE, 24", STORM AND CROSS DRAIN	LF	50	$2,000.00	$100000.00
430185130	PIPE CULVERT,OPTIONAL MATERIAL,ROUND, JACK & BORE, 30", STORM AND CROSS DRAIN	LF	50	$2,500.00	$125000.00
430185136	PIPE CULVERT,OPTIONAL MATERIAL,ROUND, JACK & BORE, 36", STORM AND CROSS DRAIN	LF	50	$3,000.00	$150000.00
430185142	PIPE CULVERT,OPTIONAL MATERIAL,ROUND, JACK & BORE, 42", STORM AND CROSS DRAIN	LF	50	$3,500.00	$175000.00
430185148	PIPE CULVERT,OPTIONAL MATERIAL,ROUND, JACK & BORE, 48", STORM AND CROSS DRAIN	LF	50	$4,000.00	$200000.00
430185154	PIPE CULVERT,OPTIONAL MATERIAL,ROUND, JACK & BORE, 54", STORM AND CROSS DRAIN	LF	50	$4,250.00	$212500.00
430185160	PIPE CULVERT,OPTIONAL MATERIAL,ROUND, JACK & BORE, 60" , STORM AND CROSS DRAIN	LF	50	$4,500.00	$225000.00
430185166	PIPE CULVERT,OPTIONAL MATERIAL,ROUND, JACK & BORE, 66" , STORM AND CROSS DRAIN	LF	50	$5,000.00	$250000.00
430185178	PIPE CULVERT,OPTIONAL MATERIAL,ROUND, JACK & BORE, 78" , STORM AND CROSS DRAIN	LF	50	$6,000.00	$300000.00
0430200 21	FLARED END SECTION, CONCRETE, 12"	EA	3	$8,000.00	$24000.00
0430200 23	FLARED END SECTION, CONCRETE, 15"	EA	3	$8,500.00	$25500.00
0430200 25	FLARED END SECTION, CONCRETE, 18"	EA	3	$9,200.00	$27600.00
0430200 29	FLARED END SECTION, CONCRETE, 24"	EA	3	$9,500.00	$28500.00
0430200 33	FLARED END SECTION, CONCRETE, 30"	EA	3	$9,800.00	$29400.00
0430200 38	FLARED END SECTION, CONCRETE, 36"	EA	3	$10,100.00	$30300.00

0430200 40	FLARED END SECTION, CONCRETE, 42"	EA	3	$10,400.00	$31200.00
0430200 41	FLARED END SECTION, CONCRETE, 48"	EA	3	$10,700.00	$32100.00
0430200 42	FLARED END SECTION, CONCRETE, 54"	EA	3	$11,100.00	$33300.00
0430200 43	FLARED END SECTION, CONCRETE, 60"	EA	3	$11,400.00	$34200.00
0430200 44	FLARED END SECTION, CONCRETE, 66"	EA	3	$11,700.00	$35100.00
0430200 45	FLARED END SECTION, CONCRETE, 72"	EA	3	$12,100.00	$36300.00
430600025	U-ENDWALL, STD 260, 1:6 SLOPE, 18"PIPE	EA	3	$7,000.00	$21000.00
430600125	U-ENDWALL, STD 260, 1:4 SLOPE, 18"PIPE	EA	3	$6,500.00	$19500.00
430602123	U-ENDWALL, WITH GRATE,STD INDEX 260, 1:4 SLOPE, 15"	EA	3	$7,000.00	$21000.00
430602125	U-ENDWALL, WITH GRATE,STD 260, 1:4 SLOPE, 18"	EA	3	$8,000.00	$24000.00
430602129	U-ENDWALL, WITH GRATE,STD 260, 1:4 SLOPE, 24"	EA	3	$8,500.00	$25500.00
430602133	U-ENDWALL, WITH GRATE,STD INDEX 260, 1:4 SLOPE, 30"	EA	3	$15,000.00	$45000.00
430610025	U-ENDWALL, STD 261, 1:6 SLOPE, 18"PIPE	EA	3	$6,500.00	$19500.00
430610029	U-ENDWALL, STD 261, 1:6 SLOPE, 24"PIPE	EA	3	$7,500.00	$22500.00
430610033	U-ENDWALL, STD 261, 1:6 SLOPE, 30"PIPE	EA	3	$8,500.00	$25500.00
430610123	U-ENDWALL, STD 261, 1:4 SLOPE, 15"PIPE	EA	3	$6,000.00	$18000.00

430610125	U-ENDWALL, STD 261, 1:4 SLOPE, 18"PIPE	EA	3	$6,500.00	$19500.00
430610129	U-ENDWALL, STD 261, 1:4 SLOPE, 24"PIPE	EA	3	$7,500.00	$22500.00
430610133	U-ENDWALL, STD 261, 1:4 SLOPE, 30"PIPE	EA	3	$8,500.00	$25500.00
430610223	U-ENDWALL, STD 261, 1:3 SLOPE, 15"PIPE	EA	3	$6,000.00	$18000.00
430610225	U-ENDWALL, STD 261, 1:3 SLOPE, 18"PIPE	EA	3	$6,500.00	$19500.00
430610229	U-ENDWALL, STD 261, 1:3 SLOPE, 24"PIPE	EA	3	$7,500.00	$22500.00
430610233	U-ENDWALL, STD 261, 1:3 SLOPE, 30"PIPE	EA	3	$8,500.00	$25500.00
430610323	U-ENDWALL, STD 261, 1:2 SLOPE, 15"PIPE	EA	3	$5,000.00	$15000.00
430610325	U-ENDWALL, STD 261, 1:2 SLOPE, 18"PIPE	EA	3	$5,500.00	$16500.00
430610329	U-ENDWALL, STD 261,1:2 SLOPE, 24"PIPE	EA	3	$6,000.00	$18000.00
430611023	U-ENDWALL, STD 261, BAFFLES, 1:6 SLOPE, 15"PIPE	EA	3	$6,500.00	$19500.00
430611025	U-ENDWALL, STD 261, BAFFLES, 1:6 SLOPE, 18"PIPE	EA	3	$8,500.00	$25500.00
430611029	U-ENDWALL, STD 261, BAFFLES, 1:6 SLOPE, 24"PIPE	EA	3	$9,000.00	$27000.00
430611033	U-ENDWALL, STD 261, BAFFLES, 1:6 SLOPE, 30"PIPE	EA	3	$10,000.00	$30000.00
430611123	U-ENDWALL WITH BAFFLES, STD 261, 1:4 SLOPE, 15"PIPE	EA	3	$5,000.00	$15000.00
430611125	U-ENDWALL WITH BAFFLES, STD 261, 1:4 SLOPE, 18"PIPE	EA	3	$5,500.00	$16500.00

430611129	U-ENDWALL WITH BAFFLES, STD 261, 1:4 SLOPE, 24"PIPE	EA	3	$7,500.00	$22500.00
430611133	U-ENDWALL WITH BAFFLES,STD 261,1:4 SLOPE,30"PIPE	EA	3	$8,500.00	$25500.00
430611223	U-ENDWALL WITH BAFFLES, STD 261, 1:3 SLOPE, 15"PIPE	EA	3	$5,000.00	$15000.00
430611225	U-ENDWALL WITH BAFFLES, STD 261, 1:3 SLOPE, 18"PIPE	EA	3	$5,500.00	$16500.00
430611229	U-ENDWALL WITH BAFFLES, STD 261, 1:3 SLOPE, 24"PIPE	EA	3	$7,500.00	$22500.00
430611233	U-ENDWALL, STD 261, BAFFLES, 1:3 SLOPE, 30"PIPE	EA	3	$8,500.00	$25500.00
430611323	U-ENDWALL WITH BAFFLES, STD 261, 1:2 SLOPE, 15"PIPE	EA	3	$5,000.00	$15000.00
430611325	U-ENDWALL WITH BAFFLES, STD 261, 1:2 SLOPE, 18"PIPE	EA	3	$5,500.00	$16500.00
430611329	U-ENDWALL WITH BAFFLES, STD 261, 1:2 SLOPE, 24"PIPE	EA	3	$7,500.00	$22500.00
430611333	U-ENDWALL, BAFFLES, STD 261, 1:2 SLOPE, 30"PIPE	EA	3	$8,500.00	$25500.00
430612023	U-ENDWALL WITH GRATE, STD 261, 1:6 SLOPE, 15"	EA	3	$8,000.00	$24000.00
430612025	U-ENDWALL WITH GRATE, STD 261, 1:6 SLOPE, 18"PIPE	EA	3	$9,000.00	$27000.00
430612029	U-ENDWALL WITH GRATE, STD 261, 1:6 SLOPE, 24"PIPE	EA	3	$10,000.00	$30000.00
430612033	U-ENDWALL WITH GRATE, STD 261, 1:6 SLOPE, 30"	EA	3	$15,000.00	$45000.00
430612125	U-ENDWALL WITH GRATE, STD 261, 1:4 SLOPE, 18"PIPE	EA	3	$9,000.00	$27000.00
430612129	U-ENDWALL WITH GRATE, STD 261, 1:4 SLOPE, 24"PIPE	EA	3	$10,000.00	$30000.00

430612133	U-ENDWALL, GRATE, STD 261, 1:4 SLOPE, 30" PIPE	EA	3	$15,000.00	$45000.00
430612329	U-ENDWALL WITH GRATE, STD 261, 1:2 SLOPE, 24"PIPE	EA	3	$10,000.00	$30000.00
430612333	U-ENDWALL, GRATE, STD 261, 1:2 SLOPE, 30" PIPE	EA	3	$15,000.00	$45000.00
430613025	U-ENDWALL, WITH BAFFLES & GRATE, STD 261,1:6 SLOPE, 18"	EA	3	$9,500.00	$28500.00
430613029	U-ENDWALL, WITH BAFFLES & GRATE, STD 261,1:6 SLOPE, 24"PIPE	EA	3	$10,500.00	$31500.00
430613033	U-ENDWALL, WITH BAFFLES & GRATE, STD 261,1:6 SLOPE, 30"	EA	3	$15,000.00	$45000.00
430613123	U-ENDWALL, WITH BAFFLES & GRATE, STD 261,1:4 SLOPE,15"PIPE	EA	3	$8,500.00	$25500.00
430613125	U-ENDWALL, WITH BAFFLES & GRATE, STD 261,1:4 SLOPE,18"PIPE	EA	3	$9,500.00	$28500.00
430613129	U-ENDWALL, WITH BAFFLES & GRATE, STD 261,1:4 SLOPE, 24"PIPE	EA	3	$10,500.00	$31500.00
430613133	U-ENDWALL, WITH BAFFLES & GRATE, STD 261,1:4 SLOPE,30"PIPE	EA	3	$15,000.00	$45000.00
430613225	U-ENDWALL, WITH BAFFLES & GRATE, STD 261,1:3 SLOPE,18"PIPE	EA	3	$9,500.00	$28500.00
430613229	U-ENDWALL, WITH BAFFLES & GRATE, STD 261,1:3 SLOPE, 24 "PIPE	EA	3	$10,500.00	$31500.00
430613233	U-ENDWALL, WITH BAFFLES & GRATE, STD 261,1:3 SLOPE,30"PIPE	EA	3	$15,000.00	$45000.00
430613325	U-ENDWALL, WITH BAFFLES & GRATE, STD 261,1:2 SLOPE,18"PIPE	EA	3	$9,500.00	$28500.00
430613333	U-ENDWALL, WITH BAFFLES & GRATE, STD 261,1:2 SLOPE,30"PIPE	EA	3	$10,500.00	$31500.00
430830	PIPE FILLING AND PLUGGING- PLACE OUT OF SERVICE	CY	20	$1,500.00	$30000.00

430950	DESILTING CONCRETE BOX CULVERT	CY	20	$1,000.00	$20000.00
0430963 1	PVC PIPE FOR BACK OF SIDEWALK, 4"	LF	50	$75.00	$3750.00
430982120	MITERED END SECTION, OPTIONAL ROUND, 8" CD	EA	3	$1,800.00	$5400.00
430982121	MITERED END SECTION, OPTIONAL ROUND, 12" CD	EA	3	$2,100.00	$6300.00
430982123	MITERED END SECTION, OPTIONAL ROUND, 15" CD	EA	3	$2,380.00	$7140.00
430982125	MITERED END SECTION, OPTIONAL ROUND, 18" CD	EA	3	$2,900.00	$8700.00
430982129	MITERED END SECTION, OPTIONAL ROUND, 24" CD	EA	3	$4,100.00	$12300.00
430982133	MITERED END SECTION, OPTIONAL ROUND, 30" CD	EA	3	$6,200.00	$18600.00
430982138	MITERED END SECTION, OPTIONAL ROUND, 36" CD	EA	3	$8,200.00	$24600.00
430982140	MITERED END SECTION, OPTIONAL ROUND, 42" CD	EA	3	$9,800.00	$29400.00
430982141	MITERED END SECTION, OPTIONAL ROUND, 48" CD	EA	3	$12,500.00	$37500.00
430982142	MITERED END SECTION, OPTIONAL ROUND, 54" CD	EA	3	$22,500.00	$67500.00
430982143	MITERED END SECTION, OPTIONAL ROUND, 60" CD	EA	3	$27,500.00	$82500.00
430982144	MITERED END SECTION, OPTIONAL ROUND, 66" CD	EA	3	$30,000.00	$90000.00
430982145	MITERED END SECTION, OPTIONAL ROUND, 72" CD	EA	3	$35,000.00	$105000.00
430982147	MITERED END SECTION, OPTIONAL ROUND, 84" CD	EA	3	$45,000.00	$135000.00

430982623	MITERED END SECTION, OPTIONAL - ELLIPTICAL / ARCH, 15" CD	EA	3	$1,700.00	$5100.00
430982625	MITERED END SECTION, OPTIONAL - ELLIPTICAL / ARCH, 18" CD	EA	3	$1,900.00	$5700.00
430982629	MITERED END SECTION, OPTIONAL - ELLIPTICAL / ARCH, 24" CD	EA	3	$2,400.00	$7200.00
430982633	MITERED END SECTION, OPTIONAL - ELLIPTICAL / ARCH, 30" CD	EA	3	$3,150.00	$9450.00
430982638	MITERED END SECTION, OPTIONAL - ELLIPTICAL / ARCH, 36" CD	EA	3	$9,000.00	$27000.00
430982640	MITERED END SECTION, OPTIONAL - ELLIPTICAL / ARCH, 42" CD	EA	3	$11,000.00	$33000.00
430982641	MITERED END SECTION, OPTIONAL - ELLIPTICAL / ARCH, 48" CD	EA	3	$13,000.00	$39000.00
430982642	MITERED END SECTION, OPTIONAL - ELLIPTICAL / ARCH, 54" CD	EA	3	$15,000.00	$45000.00
430982643	MITERED END SECTION, OPTIONAL - ELLIPTICAL / ARCH, 60" CD	EA	3	$17,000.00	$51000.00
430982645	MITERED END SECTION, OPTIONAL - ELLIPTICAL / ARCH, 72" CD	EA	3	$19,000.00	$57000.00
430984120	MITERED END SECTION, OPTIONAL ROUND, 8" SD	EA	3	$1,500.00	$4500.00
430984121	MITERED END SECTION, OPTIONAL ROUND, 12" SD	EA	3	$1,700.00	$5100.00
430984123	MITERED END SECTION, OPTIONAL ROUND, 15" SD	EA	3	$2,000.00	$6000.00
430984125	MITERED END SECTION, OPTIONAL ROUND, 18" SD	EA	3	$2,500.00	$7500.00
430984129	MITERED END SECTION, OPTIONAL ROUND, 24" SD	EA	3	$3,500.00	$10500.00
430984133	MITERED END SECTION , OPTIONAL ROUND, 30" SD	EA	3	$6,200.00	$18600.00

430984138	MITERED END SECTION , OPTIONAL ROUND, 36" SIDE DRAIN	EA	3	$6,500.00	$19500.00
430984140	MITERED END SECTION , OPTIONAL ROUND, 42" SD	EA	3	$10,000.00	$30000.00
430984141	MITERED END SECTION , OPTIONAL ROUND, 48" SD	EA	3	$12,500.00	$37500.00
430984142	MITERED END SECTION , OPTIONAL ROUND, 54" SD	EA	3	$22,500.00	$67500.00
430984143	MITERED END SECTION , OPTIONAL ROUND, 60" SD	EA	3	$27,500.00	$82500.00
430984144	MITERED END SECTION, OPTIONAL ROUND, 66" SIDE DRAIN	EA	3	$32,000.00	$96000.00
430984145	MITERED END SECTION, OPTIONAL ROUND, 72" SIDE DRAIN	EA	3	$40,000.00	$120000.00
430984147	MITERED END SECTION, OPTIONAL ROUND, 84" SD	EA	3	$50,000.00	$150000.00
430984623	MITERED END SECTION, OPTIONAL OTHER - ELLIP/ARCH, 15" SD	EA	3	$1,700.00	$5100.00
430984625	MITERED END SECT, OPTIONAL - ELLIPTICAL / ARCH, 18" SD	EA	3	$1,900.00	$5700.00
430984629	MITERED END SECT, OPTIONAL - ELLIPTICAL / ARCH, 24" SD	EA	3	$2,400.00	$7200.00
430984633	MITERED END SECT, OPTIONAL /ELLIP/ARCH, 30" SD	EA	3	$3,150.00	$9450.00
430984638	MITERED END SECT, OPTIONAL /ELLIP/ARCH, 36" SD	EA	3	$9,000.00	$27000.00
430984640	MITERED END SECT, OPTIONAL /ELLIP/ARCH, 42" SD	EA	3	$11,000.00	$33000.00
430984641	MITERED END SECT, OPTIONAL /ELLIP/ARCH, 48" SD	EA	3	$13,000.00	$39000.00
430984642	MITERED END SECT, OPTIONAL /ELLIP/ARCH, 54" SD	EA	3	$15,000.00	$45000.00

430984643	MITERED END SECTION, OPTIONAL SHAPE /ELLIP/ARCH, 60" SIDE DRAIN	EA	3	$17,000.00	$51000.00
430984644	MITERED END SECT, OPTIONAL /ELLIP/ARCH, 66" SD	EA	3	$19,000.00	$57000.00
430984645	MITERED END SECT, OPTIONAL /ELLIP/ARCH, 72" SD	EA	3	$21,000.00	$63000.00
430990	MITERED END SECT, REPLACE GRATE	EA	3	$23,000.00	$69000.00
0431 1 1	PIPE LINER, OPTIONAL MATERIAL, 0-24"	LF	50	$370.00	$18500.00
0431 1 2	PIPE LINER, OPTIONAL MATERIAL, 25-36"	LF	50	$700.00	$35000.00
0431 1 3	PIPE LINER, OPTIONAL MATERIAL, 37-48"	LF	50	$1,300.00	$65000.00
0431 1 4	PIPE LINER, OPTIONAL MATERIAL, 49 - 60"	LF	50	$1,800.00	$90000.00
0431 1 5	PIPE LINER, OPTIONAL MATERIAL, 61" AND GREATER	LF	50	$2,200.00	$110000.00
0436 1 1	TRENCH DRAIN, STANDARD	LF	50	$300.00	$15000.00
0440 1 10	UNDERDRAIN, TYPE I	LF	50	$100.00	$5000.00
0440 1 20	UNDERDRAIN, TYPE II	LF	50	$125.00	$6250.00
0440 1 30	UNDERDRAIN, TYPE III	LF	50	$165.00	$8250.00
0440 1 50	UNDERDRAIN, TYPE V	LF	50	$150.00	$7500.00
0440 70	UNDERDRAIN INSPECTION BOX	EA	5	$5,000.00	$25000.00
0440 73 1	UNDERDRAIN OUTLET PIPE, 4"	LF	50	$100.00	$5000.00

0440 73 2	UNDERDRAIN OUTLET PIPE, 6"	LF	50	$110.00	$5500.00
0440 73 3	UNDERDRAIN OUTLET PIPE, 8"	LF	50	$120.00	$6000.00
0440 73 4	UNDERDRAIN OUTLET PIPE, 10"	LF	50	$130.00	$6500.00
0440 73 5	UNDERDRAIN OUTLET PIPE, 12"	LF	50	$140.00	$7000.00
0443 70 3	FRENCH DRAIN, 18"	LF	50	$300.00	$15000.00
0443 70 4	FRENCH DRAIN, 24"	LF	50	$350.00	$17500.00
0443 70 5	FRENCH DRAIN, 30"	LF	50	$400.00	$20000.00
0443 70 6	FRENCH DRAIN, 36"	LF	50	$450.00	$22500.00
0443 70 7	FRENCH DRAIN, 42"	LF	50	$500.00	$25000.00
0443 70 8	FRENCH DRAIN, 48"	LF	50	$550.00	$27500.00
0443 70 9	FRENCH DRAIN, 54"	LF	50	$600.00	$30000.00
0443 70 10	FRENCH DRAIN, 60"	LF	50	$650.00	$32500.00
0443 72 10	FRENCH DRAIN- AGGREGATE WITHOUT PIPE, 0-0.9’ DEPTH	SY	10	$200.00	$2000.00
0443 72 11	FRENCH DRAIN- AGGREGATE WITHOUT PIPE, 1-1.9’ DEPTH	SY	10	$250.00	$2500.00
0443 72 12	FRENCH DRAIN- AGGREGATE WITHOUT PIPE, 2-2.9’ DEPTH	SY	10	$300.00	$3000.00
0443 72 13	FRENCH DRAIN- AGGREGATE WITHOUT PIPE, 3-3.9’ DEPTH	SY	10	$350.00	$3500.00

0443 72 14	FRENCH DRAIN- AGGREGATE WITHOUT PIPE, 4-4.9’ DEPTH	SY	10	$400.00	$4000.00
0446 1 1	EDGEDRAIN DRAINCRETE, STANDARD	LF	50	$75.00	$3750.00
0446 71 1	EDGEDRAIN OUTLET PIPE, 4"	LF	50	$200.00	$10000.00
0515 1 1	PIPE HANDRAIL - GUIDERAIL, STEEL	LF	50	$350.00	$17500.00
0515 1 2	PIPE HANDRAIL - GUIDERAIL, ALUMINUM	LF	50	$150.00	$7500.00
0515 1 41	PIPE HANDRAIL - GUIDERAIL, RELOCATE, STEEL	LF	50	$75.00	$3750.00
0515 1 42	PIPE HANDRAIL - GUIDERAIL, RELOCATE, ALUMINUM	LF	50	$55.00	$2750.00
0515 2111	PEDESTRIAN / BICYCLE RAILING, NS, 42" TYPE 1	LF	50	$350.00	$17500.00
0515 2211	PEDESTRIAN / BICYCLE RAILING, STEEL, 42" TYPE 1	LF	50	$550.00	$27500.00
0515 2212	PEDESTRIAN / BICYCLE RAILING, STEEL, 42" TYPE 2	LF	50	$450.00	$22500.00
0515 2213	PEDESTRIAN / BICYCLE RAILING, STEEL, 42" TYPE 3	LF	50	$700.00	$35000.00
0515 2221	PEDESTRIAN/ BICYCLE RAILING, STEEL ONLY,54" TYPE 1	LF	50	$680.00	$34000.00
0515 2231	PEDESTRIAN/ BICYCLE RAILING, STEEL ONLY,48" TYPE 1	LF	50	$620.00	$31000.00
0515 2311	PEDESTRIAN/ BICYCLE RAILING, ALUMINUM ONLY,42" TYPE 1	LF	50	$365.00	$18250.00
0515 2312	PEDESTRIAN / BICYCLE RAILING, ALUMINUM, 42" TYPE 2	LF	50	$315.00	$15750.00
0515 2313	PEDESTRIAN / BICYCLE RAILING, ALUMINUM, 42" TYPE 3	LF	50	$490.00	$24500.00

0515 2321	PEDESTRIAN/ BICYCLE RAILING, ALUMINUM ONLY,54" TYPE 1	LF	50	$420.00	$21000.00
0515 2411	PEDESTRIAN / BICYCLE RAILING, SPECIAL MATERIALS- WEATHERING STEEL, 42" TYPE 1	LF	50	$405.00	$20250.00
0515 2500	PEDESTRIAN / BICYCLE RAILING, RELOCATE	LF	50	$150.00	$7500.00
0519 78	BOLLARDS	EA	10	$3,500.00	$35000.00
0520 1 7	CONCRETE CURB & GUTTER, TYPE E	LF	1000	$75.00	$75000.00
0520 1 10	CONCRETE CURB & GUTTER, TYPE F	LF	5000	$75.00	$375000.00
0520 1 11	CONCRETE CURB & GUTTER, VARIABLE HEIGHT TYPE F	LF	100	$90.00	$9000.00
0520 1 12	CONCRETE CURB & GUTTER, TYPE F WITH SPECIAL GUTTER PROFILE	LF	100	$90.00	$9000.00
0520 2 1	CONCRETE CURB, TYPE A	LF	100	$75.00	$7500.00
0520 2 2	CONCRETE CURB, TYPE B	LF	1000	$75.00	$75000.00
0520 2 4	CONCRETE CURB, TYPE D	LF	1000	$75.00	$75000.00
0520 3	VALLEY GUTTER- CONCRETE	LF	100	$78.00	$7800.00
0520 5 11	TRAFFIC SEPARATOR CONCRETE - TYPE I, 4' WIDE	LF	50	$150.00	$7500.00
0520 5 12	TRAFFIC SEPARATOR CONCRETE - TYPE I, 6' WIDE	LF	50	$200.00	$10000.00
520 5 16	TRAFFIC SEPARATOR CONCRETE- TYPE I, 8.5' WIDE	LF	50	$250.00	$12500.00
0520 5 21	TRAFFIC SEPARATOR - CONCRETE, TYPE II, 4' WIDE	LF	50	$275.00	$13750.00

0520 5 22	TRAFFIC SEPARATOR - CONCRETE, TYPE II, 6' WIDE	LF	50	$300.00	$15000.00
0520 5 26	TRAFFIC SEPARATOR CONCRETE- TYPE II, 8.5' WIDE	LF	50	$400.00	$20000.00
0520 5 41	TRAFFIC SEPARATOR CONCRETE, TYPE IV, 4' WIDE	LF	50	$300.00	$15000.00
0520 5 42	TRAFFIC SEPARATOR CONCRETE, TYPE IV, 6' WIDE	LF	50	$350.00	$17500.00
0520 5 46	TRAFFIC SEPARATOR CONCRETE, TYPE IV, 8.5' WIDE	LF	50	$400.00	$20000.00
0520 5 51	TRAF SEP CONC, TYPE V, 4' WIDE	LF	50	$500.00	$25000.00
0520 6	SHOULDER GUTTER- CONCRETE	LF	50	$200.00	$10000.00
0520 70	CONCRETE TRAFFIC SEPARATOR, SPECIAL - VARIABLE WIDTH	SY	50	$250.00	$12500.00
0521 72 2	SHOULDER CONCRETE BARRIER WALL, BOX CULVERT	LF	100	$500.00	$50000.00
0521 72 3	SHOULDER CONCRETE BARRIER WALL, RIGID-SHOULDER	LF	100	$500.00	$50000.00
0521 72 4	SHOULDER CONCRETE BARRIER WALL, RIGID RETAINING	LF	100	$500.00	$50000.00
0521 72 5	SHOULDER CONCRETE BARRIER WALL, RIGID-CURB & GUTTER	LF	100	$550.00	$55000.00
0521 72 10	SHOULDER CONCRETE BARRIER WALL, RIGID SHOULDER 42"	LF	100	$650.00	$65000.00
0521 72 11	SHOULDER CONCRETE BARRIER WALL, RIGID SHOULDER 54"	LF	100	$750.00	$75000.00
0521 73	CONCRETE BARRIER WALL, REMOVAL	LF	20	$750.00	$15000.00
0522 1	CONCRETE SIDEWALK AND DRIVEWAY, 4" THICK	SY	3000	$150.00	$450000.00

0522 2	CONCRETE SIDEWALK AND DRIVEWAY, 6" THICK	SY	500	$180.00	$90000.00
0522 3	BUS BOARDING PAD - CONCRETE	SY	50	$200.00	$10000.00
0522 4	BUS SHELTER PAD - CONCRETE	SY	50	$200.00	$10000.00
0524 1 1	CONCRETE DITCH PAVT, NON REINFORCED, 3"	SY	10	$125.00	$1250.00
0524 1 2	CONCRETE DITCH PAVEMENT, NON REINFORCED, 4"	SY	10	$155.00	$1550.00
0524 1 3	CONCRETE DITCH PAVEMENT, NON REINFORCED, 5"	SY	10	$200.00	$2000.00
0524 1 4	CONCRETE DITCH PAVEMENT, NON REINFORCED, 6"	SY	10	$250.00	$2500.00
0524 1 19	CONCRETE DITCH PAVT, 3", REINFORCED	SY	10	$175.00	$1750.00
0524 1 29	CONCRETE DITCH PAVEMENT, 4", REINFORCED	SY	10	$195.00	$1950.00
0524 1 49	CONCRETE DITCH PAVEMENT, 6", REINFORCED	SY	10	$275.00	$2750.00
0524 2 1	CONCRETE SLOPE PAVEMENT,NON REINFORCED, 3"	SY	10	$200.00	$2000.00
0524 2 2	CONCRETE SLOPE PAVEMENT,NON REINFORCED, 4"	SY	10	$250.00	$2500.00
0524 2 4	CONCRETE SLOPE PAVEMENT,NON REINFORCED, 6"	SY	10	$300.00	$3000.00
0524 2 29	CONCRETE SLOPE PAVEMENT, 4", REINFORCED	SY	10	$300.00	$3000.00
0524 2 49	CONCRETE SLOPE PAVEMENT, 6", REINFORCED	SY	10	$450.00	$4500.00
0524 3	CONC CORE DITCH BLOCKS	CY	10	$3,500.00	$35000.00

0526 1 1	PAVERS, ARCHITECTURAL, ROADWAY	SY	50	$750.00	$37500.00
0526 1 2	PAVERS, ARCHITECTURAL, SIDEWALK	SY	50	$500.00	$25000.00
0527 2	DETECTABLE WARNINGS	SF	1000	$50.00	$50000.00
0530 1	RIPRAP, SAND-CEMENT	CY	50	$1,500.00	$75000.00
0530 3 3	RIPRAP- RUBBLE, BANK AND SHORE	TN	10	$385.00	$3850.00
0530 3 4	RIPRAP, RUBBLE, F&I, DITCH LINING	TN	10	$400.00	$4000.00
0530 3 5	RIPRAP- RUBBLE, COASTAL SHORE- LARGE BOULDERS	TN	10	$750.00	$7500.00
0530 74	BEDDING STONE	TN	10	$300.00	$3000.00
0536 1 0	GUARDRAIL -ROADWAY, GENERAL TL-2	LF	250	$25.00	$6250.00
0536 1 1	GUARDRAIL -ROADWAY, GENERAL TL-3	LF	250	$35.00	$8750.00
0536 1 3	GUARDRAIL ROADWAY, DOUBLE FACE	LF	250	$45.00	$11250.00
0536 1 11	GUARDRAIL, ROADWAY, MODIFIED THRIE BEAM	LF	250	$115.00	$28750.00
0536 1 12	GUARDRAIL ROADWAY, MODIFIED THRIE BEAM-DOUBLE FACE	LF	250	$145.00	$36250.00
0536 5 1	RUB RAIL FOR GUARDRAIL, SINGLE SIDED	LF	250	$22.00	$5500.00
0536 5 2	RUB RAIL FOR GUARDRAIL, DOUBLE SIDED	LF	250	$40.00	$10000.00
0536 7 1	SPECIAL GUARDRAIL POST- DEEP POST FOR SLOPE BREAK CONDITION-TIMBER OR STEEL	EA	5	$250.00	$1250.00

0536 7 2	SPECIAL GUARDRAIL POST- SPECIAL STEEL POST FOR CONCRETE STRUCTURE MOUNT	EA	5	$520.00	$2600.00
0536 7 3	SPECIAL GUARDRAIL POST- ENCASED POST FOR SHALLOW MOUNT	EA	5	$125.00	$625.00
0536 7 4	SPECIAL GUARDRAIL POST- FRANGIBLE LEAVE-OUT FOR MOUNTING THROUGH CONCRETE SURFACE	EA	5	$225.00	$1125.00
0536 8 11	APPROACH TRANSITION TO RIGID BARRIER- BRIDGE ANCHORAGE ASSEMBLY CONNECTION, FURNISH & INSTALL	EA	5	$3,200.00	$16000.00
0536 8 12	APPROACH TRANSITION CONNECTION TO RIGID BARRIER, FURNISH AND INSTALL, TL-2	EA	5	$2,200.00	$11000.00
0536 8 13	APPROACH TRANSITION CONNECTION TO RIGID BARRIER, FURNISH AND INSTALL, TL-3	EA	5	$3,250.00	$16250.00
0536 8 40	APPROACH TRANSITION TO RIGID BARRIER- BRIDGE ANCHORAGE ASSEMBLY, RELOCATE	EA	5	$850.00	$4250.00
0536 8 60	APPROACH TRANSITION TO RIGID BARRIER- BRIDGE ANCHORAGE ASSEMBLY, REMOVE	EA	5	$275.00	$1375.00
0536 73	GUARDRAIL REMOVAL	LF	25	$100.00	$2500.00
0536 85 22	GUARDRAIL END ANCHORAGE ASSEMBLY/END TREATMENT- FLARED	EA	2	$3,000.00	$6000.00
0536 85 24	GUARDRAIL END ANCHORAGE ASSEMBLY/END TREATMENT- PARALLEL	EA	2	$3,000.00	$6000.00
0536 85 25	GUARDRAIL END ANCHORAGE ASSEMBLY/END TREATMENT- TYPE II	EA	2	$1,600.00	$3200.00
0536 85 26	GUARDRAIL END ANCHORAGE ASSEMBLY/END TREATMENT- TYPE CRT	EA	2	$2,650.00	$5300.00
0536 85 27	GUARDRAIL END ANCHORAGE ASSEMBLY/END TREATMENT- DOUBLE FACE TERMINAL	EA	2	$10,000.00	$20000.00
0538 1	GUARDRAIL- RESET	LF	25	$50.00	$1250.00
0539 80111	OPAQUE VISUAL BARRIER, F&I, CONCRETE, 2' 3"	LF	25	$500.00	$12500.00

0544 74 40	RELOCATE CRASH CUSHION - ALL OPTIONS	EA	2	$850.00	$1700.00
0544 75 1	CRASH CUSHION	EA	2	$36,000.00	$72000.00
0546 71	RUMBLE STRIPS	PS	10	$2,000.00	$20000.00
0546 72 52	RUMBLE STRIPS, GROUND-IN, 16" CENTERLINE USED WITH RUMBLE STRIPE	GM	1	$3,000.00	$3000.00
0546 72 53	RUMBLE STRIPS, GROUND-IN, 8" EDGELINE USED WITH RUMBLE STRIPE	GM	1	$5,000.00	$5000.00
0546 72 55	RUMBLE STRIPS, GROUND-IN, 16" SHOULDER	GM	1	$5,000.00	$5000.00
0550 10110	FENCING, TYPE A, 0.0-5.0', STANDARD	LF	25	$5,000.00	$125000.00
0550 10118	FENCING, TYPE A, 0.0-5.0', TYPE A STANDARD, RESET EXISTING	LF	25	$15.00	$375.00
0550 10119	FENCING, TYPE A, 0.0-5.0', SPECIAL FEATURES	LF	25	$50.00	$1250.00
0550 10120	FENCING, TYPE A, 5.1-6.0, STANDARD	LF	25	$25.00	$625.00
0550 10128	FENCING, TYPE A, 5.1-6.0', RESET EXISTING	LF	25	$15.00	$375.00
0550 10130	FENCING, TYPE A, 6.1-7.0, STANDARD	LF	25	$25.00	$625.00
0550 10140	FENCING, TYPE A, 7.1-8.0', STANDARD	LF	25	$100.00	$2500.00
0550 10148	FENCING, TYPE A, 7.1-8.0', RESET EXISTING	LF	25	$50.00	$1250.00
0550 10149	FENCING, TYPE A, 7.1-8.0', SPECIAL FEATURES	LF	25	$50.00	$1250.00
0550 10150	FENCING, TYPE A, 8.1-10.0', STANDARD	LF	25	$100.00	$2500.00

0550 10158	FENCING, TYPE A, 8.1-10.0', RESET EXISTING	LF	25	$50.00	$1250.00
0550 10159	FENCING, TYPE A, 8.1-10.0', SPECIAL FEATURES	LF	25	$100.00	$2500.00
0550 10169	FENCING, TYPE A, 10.1-12.0', SPECIAL FEATURES	LF	25	$150.00	$3750.00
0550 10210	FENCING, TYPE B, 0.0-5.0', STANDARD FEATURES	LF	25	$25.00	$625.00
0550 10212	FENCING, TYPE B, 0.5-5.0', W/ VINYL COATING	LF	25	$25.00	$625.00
0550 10218	FENCING, TYPE B, 0.0-5.0', RESET EXISTING	LF	25	$15.00	$375.00
0550 10219	FENCING, TYPE B, 0.0-5.0', SPECIAL FEATURES	LF	25	$50.00	$1250.00
0550 10220	FENCING, TYPE B, 5.1-6.0', STANDARD	LF	25	$25.00	$625.00
0550 10221	FENCING, TYPE B, 5.1-6.0', W/ BARB WIRE ATTMT	LF	25	$80.00	$2000.00
0550 10222	FENCING, TYPE B, 5.1-6.0, W/ VINYL COATING	LF	25	$80.00	$2000.00
0550 10228	FENCING, TYPE B, 5.1-6.0, RESET EXISTING	LF	25	$35.00	$875.00
0550 10229	FENCING, TYPE B, 5.1-6.0, SPECIAL FEATURES	LF	25	$100.00	$2500.00
0550 10230	FENCING, TYPE B, 6.1-7.0', STANDARD	LF	25	$80.00	$2000.00
0550 10231	FENCING, TYPE B, 6.1-7.0, W/ BARB WIRE ATTMT	LF	25	$80.00	$2000.00
0550 10232	FENCING, TYPE B, 6.1-7.0, W/ VINYL COATING	LF	25	$80.00	$2000.00
0550 10238	FENCING, TYPE B, 6.1-7.0, RESET EXISTING	LF	25	$35.00	$875.00

0550 10240	FENCING, TYPE B, 7.1-8.0', STANDARD	LF	25	$100.00	$2500.00
0550 10242	FENCING, TYPE B, 7.1-8.0', VINYL COATING	LF	25	$100.00	$2500.00
0550 10248	FENCING, TYPE B, 7.1-8.0, RESET EXISTING	LF	25	$45.00	$1125.00
0550 10250	FENCING, TYPE B, 8.1-10.0', STANDARD FEATURES	LF	25	$100.00	$2500.00
0550 10251	FENCING, TYPE B, 8.1-10.0', WITH BARBED WIRE ATTMT	LF	25	$100.00	$2500.00
0550 10252	FENCING, TYPE B, 8.1-10.0', VINYL COATING	LF	25	$100.00	$2500.00
0550 10256	FENCING, TYPE B, 8-10.0', WITH VINYL COATING AND BARBED WIRE ATTACHMENT	LF	25	$100.00	$2500.00
0550 10258	FENCING, TYPE B, 8.1-10.0', RESET EXISTING FENCE	LF	25	$45.00	$1125.00
0550 10259	FENCING, TYPE B, 8.1-10.0', SPECIAL	LF	25	$150.00	$3750.00
0550 10266	FENCING, TYPE B, 10.1-12.0', WITH VINYL COATING AND BARBED WIRE ATTACHMENT	LF	25	$100.00	$2500.00
0550 10315	FENCING, TYPE R, 0-5.0', VERTICAL	LF	25	$100.00	$2500.00
0550 10325	FENCING, TYPE R, 5.1-6.0', VERTICAL	LF	25	$100.00	$2500.00
0550 10335	FENCING, TYPE R, 6.1-7.0', VERTICAL	LF	25	$150.00	$3750.00
0550 10343	FENCING, TYPE R, 7.1-8.0, W/FULL ENCLOSURE	LF	25	$850.00	$21250.00
0550 10344	FENCING, TYPE R, 7.1-8.0, W / PARTIAL ENCLOSURE	LF	25	$650.00	$16250.00
0550 10353	FENCING, TYPE R, 8.1 - 10.0', WITH FULL ENCLOSURE	LF	25	$950.00	$23750.00

0550 10354	FENCING, TYPE R, 8.1-10.0', WITH PARTIAL ENCLOSURE, TYPE R ONLY	LF	25	$750.00	$18750.00
0550 10355	FENCING, TYPE R, 8.1-10.0', VERTICAL	LF	25	$150.00	$3750.00
0550 10363	FENCING, TYPE R, GREATER THAN 10.0', WITH FULL ENCLOSURE	LF	25	$100.00	$2500.00
0570 1 2	PERFORMANCE TURF, SOD	SY	1500	$12.00	$18000.00
0571 1 11	PLASTIC EROSION MAT, TURF REINFORCED MAT, TYPE 1	SY	100	$5.00	$500.00
0571 1 12	PLASTIC EROSION MAT, TRM, TYPE 2	SY	100	$5.00	$500.00
0571 1 13	PLASTIC EROSION MAT, TURF REINFORCED MAT, TYPE 3	SY	100	$15.00	$1500.00
0591 1 2	4" LANDSCAPE SLEEVE (UNDERGROUND)	LF	50	$50.00	$2500.00
0591 1 2A	4" LANDSCAPE SLEEVE (BORED)	LF	50	$100.00	$5000.00
0630 2 11	CONDUIT, FURNISH & INSTALL, OPEN TRENCH	LF	1000	$60.00	$60000.00
0630 2 12	CONDUIT, FURNISH & INSTALL, DIRECTIONAL BORE	LF	1000	$85.00	$85000.00
0630 2 14	CONDUIT, FURNISH & INSTALL, ABOVEGROUND	LF	1000	$75.00	$75000.00
0630 2 15	CONDUIT, FURNISH & INSTALL, BRIDGE MOUNT	LF	100	$75.00	$7500.00
0630 2 65	CONDUIT, REMOVE, BRIDGE MOUNT	LF	100	$30.00	$3000.00
0654 001	RECTANGULAR RAPID FLASHING BEACON ASSEMBLY	EA	2	$13,500.00	$27000.00
0660 2101	LOOP ASSEMBLY- F&I, TYPE A	AS	20	$2,800.00	$56000.00

0660 2102	LOOP ASSEMBLY, F&I, TYPE B	AS	20	$2,800.00	$56000.00
0660 2103	LOOP ASSEMBLY, F&I, TYPE C	AS	20	$2,800.00	$56000.00
0660 2104	LOOP ASSEMBLY, F&I, TYPE D	AS	20	$2,800.00	$56000.00
0660 2105	LOOP ASSEMBLY, F&I, TYPE E	AS	20	$2,800.00	$56000.00
0660 2106	LOOP ASSEMBLY, F&I, TYPE F	AS	20	$3,300.00	$66000.00
0660 2107	LOOP ASSEMBLY, F&I, TYPE G	AS	20	$3,300.00	$66000.00
0660 3 11	VEHICLE DETECTION SYSTEM- MICROWAVE, FURNISH & INSTALL CABINET EQUIPMENT	EA	5	$9,700.00	$48500.00
0660 3 12	VEHICLE DETECTION SYSTEM- MICROWAVE, FURNISH & INSTALL, ABOVE GROUND EQUIPMENT	EA	5	$16,500.00	$82500.00
0700 1 11	SINGLE POST SIGN, F&I GROUND MOUNT, UP TO 12 SF	AS	50	$750.00	$37500.00
0700 1 12	SINGLE POST SIGN, F&I GROUND MOUNT, 12-20 SF	AS	20	$2,500.00	$50000.00
0700 1 13	SINGLE POST SIGN, F&I GROUND MOUNT, 21-30 SF	AS	5	$3,600.00	$18000.00
0700 1 14	SINGLE POST SIGN, F&I GROUND MOUNT, 31+ SF	AS	5	$5,300.00	$26500.00
0700 1 18	SINGLE POST SIGN, F&I GROUND MOUNT, IN-STREET FLEXIBLE POST	AS	5	$500.00	$2500.00
0700 1 21	SINGLE POST SIGN, F&I BARRIER MOUNT INDEX 11871 UP TO 12 SF	AS	5	$3,500.00	$17500.00
0700 1 22	SINGLE POST SIGN, F&I BARRIER MOUNT INDEX 11871 12-20 SF	AS	5	$3,950.00	$19750.00
0700 1 23	SINGLE POST SIGN, F&I BARRIER MOUNT INDEX 11871, 21-30 SF SHEETING AREA- BACK TO BACK	AS	5	$4,600.00	$23000.00

0700 1 31	SINGLE POST SIGN, F&I BRIDGE MOUNT INDEX 11870, UP TO 12 SF	AS	5	$3,500.00	$17500.00
0700 1 32	SINGLE POST SIGN, F&I BRIDGE MOUNT INDEX 11870, 12-20 SF	AS	5	$3,950.00	$19750.00
0700 1 33	SINGLE POST SIGN, F&I BRIDGE MOUNT INDEX 11870, 21-30 SF	AS	5	$4,600.00	$23000.00
0700 1 40	SINGLE POST SIGN, INSTALL	AS	5	$550.00	$2750.00
0700 1 50	SINGLE POST SIGN, RELOCATE	AS	10	$400.00	$4000.00
0700 1 60	SINGLE POST SIGN, REMOVE	AS	50	$75.00	$3750.00
0700 1 74	SINGLE POST SIGN, F&I CUSTOM, 31+ SF	AS	5	$7,150.00	$35750.00
0700 2 11	MULTI- POST SIGN, F&I GROUND MOUNT, UP TO 12 SF	AS	5	$5,650.00	$28250.00
0700 2 12	MULTI- POST SIGN, F&I GROUND MOUNT, 12-20 SF	AS	5	$6,650.00	$33250.00
0700 2 13	MULTI- POST SIGN, F&I GROUND MOUNT, 21-30 SF	AS	5	$8,150.00	$40750.00
0700 2 14	MULTI- POST SIGN, F&I GROUND MOUNT, 31-50 SF	AS	5	$11,150.00	$55750.00
0700 2 15	MULTI- POST SIGN, F&I GROUND MOUNT, 51-100 SF	AS	5	$16,650.00	$83250.00
0700 2 16	MULTI- POST SIGN, F&I GROUND MOUNT, 101-200 SF	AS	5	$22,150.00	$110750.00
0700 2 40	MULTI- POST SIGN, INSTALL	AS	5	$8,150.00	$40750.00
0700 2 50	MULTI- POST SIGN, F&I GROUND MOUNT, RELOCATE	AS	5	$8,150.00	$40750.00
0700 2 60	MULTI- POST SIGN, F&I GROUND MOUNT, REMOVE	AS	5	$2,150.00	$10750.00

0700 2 80	MULTI- POST SIGN, F&I GROUND MOUNT, REPAIR	AS	5	$3,150.00	$15750.00
0700 3101	SIGN PANEL, FURNISH & INSTALL GROUND MOUNT, UP TO 12 SF	EA	5	$450.00	$2250.00
0700 3102	SIGN PANEL, FURNISH & INSTALL GROUND MOUNT, 12-20 SF	EA	5	$1,350.00	$6750.00
0700 3103	SIGN PANEL, FURNISH & INSTALL GROUND MOUNT, 21-30 SF	EA	5	$3,150.00	$15750.00
0700 3104	SIGN PANEL, FURNISH & INSTALL GROUND MOUNT, 31-50 SF	EA	5	$5,950.00	$29750.00
0700 3105	SIGN PANEL, FURNISH & INSTALL GROUND MOUNT, 51-100 SF	EA	5	$9,650.00	$48250.00
0700 3106	SIGN PANEL, FURNISH & INSTALL GROUND MOUNT, 101-200 SF	EA	5	$13,150.00	$65750.00
0700 3201	SIGN PANEL, FURNISH & INSTALL OVERHEAD MOUNT, UP TO 12 SF	EA	5	$1,125.00	$5625.00
0700 3202	SIGN PANEL, FURNISH & INSTALL OVERHEAD MOUNT, 12-20 SF	EA	5	$1,500.00	$7500.00
0700 3203	SIGN PANEL, FURNISH & INSTALL OVERHEAD MOUNT, 21-30 SF	EA	5	$3,100.00	$15500.00
0700 3204	SIGN PANEL, FURNISH & INSTALL OVERHEAD MOUNT, 31-50 SF	EA	5	$4,600.00	$23000.00
0700 3205	SIGN PANEL, FURNISH & INSTALL OVERHEAD MOUNT, 51-100 SF	EA	5	$7,300.00	$36500.00
0700 3206	SIGN PANEL, FURNISH & INSTALL OVERHEAD MOUNT, 101-200 SF	EA	5	$10,300.00	$51500.00
0700 3401	SIGN PANEL, INSTALL, UP TO 12 SF	EA	5	$350.00	$1750.00
0700 3402	SIGN PANEL, INSTALL, 12-20 SF	EA	5	$850.00	$4250.00
0700 3403	SIGN PANEL, INSTALL, 21-30 SF,	EA	5	$1,850.00	$9250.00

0700 3404	SIGN PANEL, INSTALL, 31-50 SF	EA	5	$2,875.00	$14375.00
0700 3405	SIGN PANEL, INSTALL, 51-100 SF,	EA	5	$5,150.00	$25750.00
0700 3406	SIGN PANEL, INSTALL, 101-200 SF	EA	5	$7,650.00	$38250.00
0700 3501	SIGN PANEL, RELOCATE, UP TO 12 SF	EA	5	$350.00	$1750.00
0700 3502	SIGN PANEL, RELOCATE, 12-20 SF	EA	5	$850.00	$4250.00
0700 3503	SIGN PANEL, RELOCATE, 21-30 SF	EA	5	$1,850.00	$9250.00
0700 3504	SIGN PANEL, RELOCATE, 31-50 SF	EA	5	$2,875.00	$14375.00
0700 3505	SIGN PANEL, RELOCATE, 51-100 SF	EA	5	$5,100.00	$25500.00
0700 3506	SIGN PANEL, RELOCATE, 101-200 SF	EA	5	$7,600.00	$38000.00
0700 3601	SIGN PANEL, REMOVE, UP TO 12 SF	EA	5	$100.00	$500.00
0700 3602	SIGN PANEL, REMOVE, 12-20 SF	EA	5	$200.00	$1000.00
0700 3603	SIGN PANEL, REMOVE, 21-30 SF	EA	5	$400.00	$2000.00
0700 3604	SIGN PANEL, REMOVE, 31-50 SF	EA	5	$600.00	$3000.00
0700 3605	SIGN PANEL, REMOVE, 51-100 SF	EA	5	$600.00	$3000.00
0700 3606	SIGN PANEL, REMOVE, 101-200 SF	EA	5	$850.00	$4250.00
0700 3624	SIGN PANEL, REMOVE, UP TO 50 SF WITH LIGHTING	EA	5	$850.00	$4250.00

0700 3625	SIGN PANEL, REMOVE, 51-100 SF WITH LIGHTING	EA	5	$1,100.00	$5500.00
0700 3626	SIGN PANEL, REMOVE, 101-200 SF WITH LIGHTING	EA	5	$1,350.00	$6750.00
0700 12 11	SIGN BEACON, F&I GROUND MOUNT- AC POWERED, ONE BEACON	AS	5	$11,500.00	$57500.00
0700 12 12	SIGN BEACON, F&I GROUND MOUNT- AC POWERED, TWO BEACONS	AS	5	$13,500.00	$67500.00
0700 12 21	SIGN BEACON, F&I GROUND MOUNT- SOLAR POWERED, ONE BEACON	AS	5	$11,500.00	$57500.00
0700 12 22	SIGN BEACON, F&I GROUND MOUNT- SOLAR POWERED, TWO BEACONS	AS	5	$13,500.00	$67500.00
0700 12 31	SIGN BEACON, F&I OVERHEAD MOUNT, ONE BEACON	AS	5	$13,500.00	$67500.00
0700 12 32	SIGN BEACON, F&I OVERHEAD MOUNT, TWO BEACONS	AS	5	$19,000.00	$95000.00
0700 12 50	SIGN BEACON, RELOCATE BEACON- SIGN TO REMAIN	AS	5	$1,600.00	$8000.00
0700 12 60	SIGN BEACON, REMOVE BEACON- SIGN TO REMAIN	AS	5	$400.00	$2000.00
0700 13 10	RETROREFLECTIVE SIGN STRIP- BACK OF RAIL ROAD CROSSBUCK SIGN BLADES	EA	5	$875.00	$4375.00
0700 13 12	RETROREFLECTIVE SIGN STRIP- FURNISH AND INSTALL, 2'	EA	5	$100.00	$500.00
0700 13 15	RETROREFLECTIVE SIGN STRIP- FURNISH AND INSTALL, 5'	EA	5	$105.00	$525.00
0701 17101	PROFILED THERMOPLASTIC,STANDARD- CONCRETE SURFACES, WHITE, SOLID,6"	GM	1	$15,000.00	$15000.00
0701 17201	PROFILED THERMOPLASTIC,STANDARD- CONCRETE SURFACES, YELLOW, SOLID,6"	GM	1	$15,000.00	$15000.00
0701 17221	PROFILED THERMOPLASTIC,STANDARD- CONCRETE SURFACES, YELLOW, SKIP,6"	GM	1	$12,000.00	$12000.00

0701 18101	PROFILED THERMOPLASTIC,STANDARD- ASPHALT SURFACES, WHITE, SOLID,6"	GM	1	$12,000.00	$12000.00
0701 18201	PROFILED THERMOPLASTIC,STANDARD- ASPHALT SURFACES, YELLOW, SOLID,6"	GM	1	$12,000.00	$12000.00
0701 18221	PROFILED THERMOPLASTIC,STANDARD- ASPHALT SURFACES, YELLOW, SKIP,6"	GM	1	$10,000.00	$10000.00
0705 10 1	OBJECT MARKER, TYPE 1	EA	5	$400.00	$2000.00
0705 10 2	OBJECT MARKER, TYPE 2	EA	5	$400.00	$2000.00
0705 10 3	OBJECT MARKER, TYPE 3	EA	5	$400.00	$2000.00
0705 10 4	OBJECT MARKER, TYPE 4	EA	5	$400.00	$2000.00
0705 11 1	DELINEATOR, FLEXIBLE TUBULAR	EA	50	$315.00	$15750.00
0705 11 2	DELINEATOR, NON-FLEXIBLE	EA	5	$315.00	$1575.00
0705 11 3	DELINEATOR, FLEXIBLE HIGH VISABILITY MEDIAN	EA	5	$475.00	$2375.00
0705 11 4	DELINEATOR, FLEXIBLE HIGH PERFORMANCE	EA	5	$365.00	$1825.00
0706 1 3	RAISED PAVEMENT MARKER, TYPE B	EA	200	$8.00	$1600.00
0710 90	PAINTED PAVEMENT MARKINGS, FINAL SURFACE	LS	5	$10,000.00	$50000.00
0710 11101	PAINTED PAVEMENT MARKINGS, STANDARD, WHITE, SOLID, 6"	GM	1	$3,000.00	$3000.00
0710 11102	PAINTED PAVEMENT MARKINGS, STANDARD, WHITE, SOLID FOR INTERCHANGE AND URBAN ISLAND, 8"	GM	1	$3,500.00	$3500.00
0710 11103	PAINTED PAVEMENT MARKINGS, STANDARD, WHITE, SOLID FOR INTERCHANGE MARKINGS, 12"	GM	1	$5,500.00	$5500.00

0710 11123	PAINTED PAVEMENT MARKINGS, STANDARD, WHITE, SOLID, 12"	LF	3000	$5.00	$15000.00
0710 11124	PAINTED PAVEMENT MARKINGS, STANDARD, WHITE, SOLID, 18"	LF	2000	$7.00	$14000.00
0710 11125	PAINTED PAVEMENT MARKINGS, STANDARD, WHITE, SOLID, 24"	LF	2000	$8.00	$16000.00
0710 11131	PAINTED PAVEMENT MARKINGS, STANDARD, WHITE, SKIP, 10-30 OR 3-9 SKIP, 6" WIDE	GM	1	$1,000.00	$1000.00
0710 11133	PAINTED PAVEMENT MARKING, STANDARD,WHITE, 3'-9' SKIP DROP LINE AND APPROACH TO TOLL PLAZA, 12" WIDE,	GM	1	$1,500.00	$1500.00
0710 11141	PAINTED PAVEMENT MARKINGS, STANDARD, WHITE, 2-4 DOTTED GUIDELINE/ 6-10 DOTTED EXTENSION, 6"	GM	1	$1,000.00	$1000.00
0710 11160	PAINTED PAVEMENT MARKINGS, STANDARD, WHITE, MESSAGE	EA	25	$300.00	$7500.00
0710 11170	PAINTED PAVEMENT MARKINGS, STANDARD, WHITE, ARROWS	EA	25	$300.00	$7500.00
0710 11180	PAINTED PAVEMENT MARKINGS, STANDARD, WHITE, YIELD LINE	LF	500	$20.00	$10000.00
0710 11190	PAINTED PAVEMENT MARKINGS, STANDARD, WHITE, ISLAND NOSE	SF	100	$15.00	$1500.00
0710 11201	PAINTED PAVEMENT MARKINGS, STANDARD, YELLOW, SOLID, 6"	GM	1	$3,000.00	$3000.00
0710 11202	PAINTED PAVEMENT MARKINGS, STANDARD, YELLOW, SOLID FOR INTERCHANGE AND URBAN ISLAND, 8"	GM	1	$3,500.00	$3500.00
0710 11203	PAINTED PAVEMENT MARKINGS, STANDARD, YELLOW, SOLID, 12"	GM	1	$3,500.00	$3500.00
0710 11223	PAINTED PAVEMENT MARKINGS, STANDARD, YELLOW, SOLID, 12"	LF	100	$20.00	$2000.00
0710 11224	PAINTED PAVEMENT MARKINGS, STANDARD, YELLOW, SOLID, 18"	LF	300	$20.00	$6000.00
0710 11225	PAINTED PAVEMENT MARKINGS, STANDARD, YELLOW, SOLID, 24"	LF	100	$25.00	$2500.00

0710 11231	PAINTED PAVEMENT MARKINGS, STANDARD, YELLOW, SKIP, 6"	GM	1	$1,500.00	$1500.00
0710 11241	PAINTED PAVEMENT MARKINGS, STANDARD, YELLOW, 2-4 DOTTED GUIDELINE/6-10 DOTTED EXTENSION, 6"	GM	1	$1,500.00	$1500.00
0710 11290	PAINTED PAVEMENT MARKINGS, STANDARD, YELLOW, ISLAND NOSE	SF	100	$20.00	$2000.00
0710 11331	PAINTED PAVEMENT MARKINGS, STANDARD,BLACK, SKIP, 6"	GM	1	$1,500.00	$1500.00
0710 11333	PAINTED PAVEMENT MARKING, STANDARD, BLACK, 3'-9' DOTTED LANE DROP AND APPROACH TO TOLL PLAZA, 12"	GM	1	$1,500.00	$1500.00
0710 11341	PAINTED PAVEMENT MARKINGS, STANDARD, BLACK, 2-4 DOTTED GUIDELINE/ 6-10 DOTTED EXTENSION, 6"	GM	1	$1,500.00	$1500.00
0710 11421	PAINTED PAVEMENT MARKINGS, STANDARD, BLUE, SOLID FOR PARKING LOT- ACCESSIBLE MARKINGS, 6"	LF	100	$10.00	$1000.00
0710 12231	PAINTED PAVEMENT MARKINGS, DURABLE, YELLOW, SKIP, 6"	GM	1	$1,500.00	$1500.00
0710 12421	PAINTED PAVEMENT MARKINGS, DURABLE, BLUE, SOLID FOR PARKING LOT-ACCESSIBLE MARKINGS, 6"	LF	100	$10.00	$1000.00
0711 11102	THERMOPLASTIC, STANDARD, WHITE, SOLID, 8" FOR INTERCHANGE AND URBAN ISLAND	GM	1	$12,000.00	$12000.00
0711 11103	THERMOPLASTIC, STANDARD, WHITE, SOLID, 12" FOR INTERCHANGE MARKINGS	GM	1	$15,000.00	$15000.00
0711 11123	THERMOPLASTIC, STANDARD, WHITE, SOLID, 12" FOR CROSSWALK AND ROUNDABOUT	LF	2500	$8.00	$20000.00
0711 11124	THERMOPLASTIC, STANDARD, WHITE, SOLID, 18" FOR DIAGONALS AND CHEVRONS	LF	500	$10.00	$5000.00
0711 11125	THERMOPLASTIC, STANDARD, WHITE, SOLID, 24" FOR STOP LINE AND CROSSWALK	LF	1500	$12.00	$18000.00
0711 11130	THERMOPLASTIC, STANDARD, WHITE, VERTICAL DEFLECTION MARKING	EA	10	$100.00	$1000.00
0711 11140	THERMOPLASTIC, STANDARD, WHITE, VERTICAL DEFLECTION ADVANCED WARNING MARKING	EA	10	$150.00	$1500.00

0711 11141	THERMOPLASTIC, STANDARD, WHITE, 2-4 DOTTED GUIDELINE/ 6-10 GAP EXTENSION, 6"	GM	1	$4,000.00	$4000.00
0711 11143	THERMOPLASTIC, STANDARD, WHITE, 2-4 DOTTED GUIDELINE, 12" FOR ROUNDABOUT	GM	1	$4,500.00	$4500.00
0711 11160	THERMOPLASTIC, STANDARD, WHITE, MESSAGE OR SYMBOL	EA	20	$300.00	$6000.00
0711 11170	THERMOPLASTIC, STANDARD, WHITE, ARROW	EA	20	$200.00	$4000.00
0711 11180	THERMOPLASTIC, STANDARD, WHITE, YIELD LINE	LF	250	$150.00	$37500.00
0711 11224	THERMOPLASTIC, STANDARD, YELLOW, SOLID, 18" FOR DIAGONAL OR CHEVRON	LF	250	$10.00	$2500.00
0711 11241	THERMOPLASTIC, STANDARD, YELLOW, 2-4 DOTTED GUIDE LINE /6-10 DOTTED EXTENSION LINE, 6"	GM	1	$4,500.00	$4500.00
0711 11421	THERMOPLASTIC, STANDARD, BLUE, SOLID,6"	LF	100	$12.00	$1200.00
0711 14123	THERMOPLASTIC, PREFORMED, WHITE, SOLID, 12"	LF	1000	$15.00	$15000.00
0711 14125	THERMOPLASTIC, PREFORMED, WHITE, SOLID, 24"	LF	1000	$20.00	$20000.00
0711 14141	THERMOPLASTIC, PREFORMED, WHITE, 2-4 DOTTED GUIDELINE ON CONCRETE SURFACES	GM	1	$15,000.00	$15000.00
0711 14160	THERMOPLASTIC, PREFORMED, WHITE, MESSAGE	EA	5	$400.00	$2000.00
0711 14170	THERMOPLASTIC, PREFORMED, WHITE, ARROWS	EA	20	$300.00	$6000.00
0711 14191	THERMOPLASTIC, PREFORMED, 6" WHITE, RAILROAD DYNAMIC ENVELOPE	LF	100	$12.00	$1200.00
0711 14193	THERMOPLASTIC, PREFORMED, 12" WHITE ON ASPHALT PAVEMENT, RAILROAD DYNAMIC ENVELOPE	LF	250	$15.00	$3750.00
0711 14194	THERMOPLASTIC, PREFORMED, 12" WHITE WITH 4" OUTSIDE BLACK CONTRAST ON CONCRETE PAVEMENT, RAILROAD DYNAMIC ENVELOPE	LF	100	$18.00	$1800.00

0711 14341	THERMOPLASTIC, PREFORMED, BLACK, 2-4 DOTTED GUIDELINE ON CONCRETE SURFACES	GM	1	$15,000.00	$15000.00
0711 14560	THERMOPLASTIC, PREFORMED, WHITE WITH BLACK CONTRAST ON CONCRETE PAVEMENT, MESSAGE OR SYMBOL	EA	5	$1,500.00	$7500.00
0711 14570	THERMOPLASTIC, PREFORMED, WHITE WITH BLACK CONTRAST, ARROW ON CONCRETE SURFACE	EA	5	$1,500.00	$7500.00
0711 15101	THERMOPLASTIC, STANDARD-OPEN GRADED ASPHALT SURFACES WHITE, SOLID, 6"	GM	1	$7,500.00	$7500.00
0711 15102	THERMOPLASTIC, STANDARD-OPEN GRADED ASPHALT SURFACES, WHITE, SOLID, 8"	GM	1	$8,500.00	$8500.00
0711 15131	THERMOPLASTIC, STANDARD-OPEN GRADED ASPHALT SURFACES, WHITE, SKIP, 6",10-30 SKIP OR 3-9 LANE DROP	GM	1	$6,500.00	$6500.00
0711 15133	THERMOPLASTIC, STANDARD-OPEN GRADED ASPHALT SURFACES, WHITE, SKIP, 12"- APPROACH TO TOLL PLAZA OR 3-9 LANE DROP	GM	1	$7,000.00	$7000.00
0711 15201	THERMOPLASTIC, STANDARD-OPEN GRADED ASPHALT SURFACES, YELLOW, SOLID, 6"	GM	1	$8,000.00	$8000.00
0711 15202	THERMOPLASTIC, STANDARD-OPEN GRADED ASPHALT SURFACES YELLOW, SOLID, 8"	GM	1	$9,500.00	$9500.00
0711 15231	THERMOPLASTIC, STANDARD-OPEN GRADED ASPHALT SURFACES, YELLOW, SKIP, 6"	GM	1	$5,000.00	$5000.00
0711 16101	THERMOPLASTIC, STANDARD-OTHER SURFACES, WHITE, SOLID, 6"	GM	3	$7,000.00	$21000.00
0711 16102	THERMOPLASTIC, STANDARD-OTHER SURFACES, WHITE, SOLID, 8"	GM	1	$8,500.00	$8500.00
0711 16131	THERMOPLASTIC, OTHER SURFACES, WHITE, SKIP, 6",10-30 SKIP OR 3-9 LANE DROP	GM	1	$5,000.00	$5000.00
0711 16133	THERMOPLASTIC, STANDARD-OTHER SURFACES WHITE, SKIP, 12"- APPROACH TO TOLL PLAZA OR 3-9 LANE DROP	GM	1	$6,500.00	$6500.00
0711 16201	THERMOPLASTIC, STANDARD-OTHER SURFACES, YELLOW, SOLID, 6"	GM	3	$6,500.00	$19500.00
0711 16202	THERMOPLASTIC, STANDARD-OTHER SURFACES, YELLOW, SOLID, 8"	GM	1	$8,500.00	$8500.00

0711 16231	THERMOPLASTIC, STANDARD-OTHER SURFACES, YELLOW, SKIP, 6"	GM	1	$5,000.00	$5000.00
0711 17	THERMOPLASTIC, REMOVE EXISTING THERMOPLASTIC PAVEMENT MARKINGS: NON-CONFLICTING ONLY	SF	500	$8.00	$4000.00
0711 12131	THERMOPLASTIC, REFURBISHMENT, WHITE, SKIP, 6"	GM	1	$2,000.00	$2000.00
0711 12160	THERMOPLASTIC, REFURBISH, WHITE, MESSAGE	EA	5	$200.00	$1000.00
0711 12170	THERMOPLASTIC, REFURBISH, WHITE, ARROWS	EA	5	$200.00	$1000.00
0711 12231	THERMOPLASTIC, REFURBISHMENT, YELLOW, SKIP, 6"	GM	1	$2,000.00	$2000.00
713103101	PERMANENT TAPE, WHITE, SOLID, 6" FOR CONCRETE BRIDGES	GM	1	$45,000.00	$45000.00
713103102	PERMANENT TAPE, WHITE, SOLID, 8" EXIT LANE AT INTERCHANGE ON CONCRETE PAVEMENT	GM	1	$48,000.00	$48000.00
713103103	PERMANENT TAPE, WHITE, SOLID DROP LANE MARKING, 12" FOR CONCRETE BRIDGES,	GM	1	$25,000.00	$25000.00
713103131	PERMANENT TAPE, WHITE, SKIP/DOTTED, 6" FOR CONCRETE SURFACES	GM	1	$15,000.00	$15000.00
713103133	PERMANENT TAPE, WHITE, SKIP, 12" WIDE 3'-9' DROP LANE ON CONCRETE SURFACES	GM	1	$25,000.00	$25000.00
713103201	PERMANENT TAPE, YELLOW, SOLID, 6" FOR CONCRETE BRIDGES	GM	1	$45,000.00	$45000.00
713103231	PERMANENT TAPE, YELLOW, 10-30 SKIP/ 3-9 DOTTED, 6" FOR CONCRETE SURFACES	GM	1	$15,000.00	$15000.00
713103331	PERMANENT TAPE, BLACK, SKIP/DOTTED, 6" FOR CONCRETE SURFACES	GM	1	$15,000.00	$15000.00
713103333	PERMANENT TAPE, BLACK, 3'-9' DROP LANE, 12" ON CONCRETE SURFACES	GM	1	$25,000.00	$25000.00
713107	PREFORMED/PERMANENT TAPE, REMOVE	SF	50	$100.00	$5000.00

400143	CLEANING & COATING CONCRETE SURFACE, CLASS 5	SF	5	$25.00	$125.00
906-173-7	SINGLE COMPONENT POLYURETHANE INJECTION	GAL	500	$250.00	$125000.00
906-173-8	TWO COMPONENT POLYURETHANE INJECTION	LB	10000	$15.00	$150000.00
MISCELLANEOUS LABOR, EQUIPMENT, MATERIAL, AND SUB-CONTRACTOR ITEMS					
	LABOR - FOREMAN	HR	1	$50.00	$50.00
	LABOR - OPERATOR	HR	1	$55.00	$55.00
	LABOR - TRUCK DRIVER	HR	1	$65.00	$65.00
	LABOR - PIPE LAYERS (FOR PIPES < 48" DIA.)	HR	1	$45.00	$45.00
	LABOR - LABORER	HR	1	$40.00	$40.00
	EQUIPMENT - FOREMAN P/U WITH HAND TOOLS	HR	1	$35.00	$35.00
	EQUIPMENT - JOB TRUCK WITH MANDATORY TOOLS*	HR	1	$50.00	$50.00
	EQUIPMENT - CRANE (20 TON)	HR	1	$700.00	$700.00
	EQUIPMENT - CRANE (60 TON)	HR	1	$1,000.00	$1000.00
	EQUIPMENT - TRACTOR & TRAILER (TRANSPORT)	HR	1	$250.00	$250.00
	EQUIPMENT - TRACK HOE (TO 100 HP)	HR	1	$300.00	$300.00
	EQUIPMENT - TRACK HOE (101 HP TO 170 HP)	HR	1	$450.00	$450.00
	EQUIPMENT - RUBBER TIRED BACKHOE	HR	1	$200.00	$200.00
	EQUIPMENT - WHEEL LOADER (TO 150 HP)	HR	1	$230.00	$230.00
	EQUIPMENT - WHEEL LOADER (151 HP AND UP)	HR	1	$280.00	$280.00
	EQUIPMENT - TRACK TYPE TRACTORS (TO 100 HP)	HR	1	$180.00	$180.00

	EQUIPMENT - TRACK TYPE TRACTORS (101 HP AND UP)	HR	1	$200.00	$200.00
	EQUIPMENT - DUMP TRUCK (TANDEM AXLE)	HR	1	$150.00	$150.00
	EQUIPMENT - PLATE TAMP	HR	1	$25.00	$25.00
	EQUIPMENT - 3" TRASH PUMP	HR	1	$100.00	$100.00
	EQUIPMENT - 4" DOUBLE DIAPHRAGM PUMP	HR	1	$200.00	$200.00
	EQUIPMENT - AIR COMPRESSOR (125 SCFM)	HR	1	$75.00	$75.00
	EQUIPMENT - WELL POINT PUMP	HR	1	$1,500.00	$1500.00
	EQUIPMENT - 4" JET PUMP	HR	1	$60.00	$60.00
	MATERIAL - 2500 PSI CONCRETE (UN-FORMED)	CY	1	$500.00	$500.00
	MATERIAL - OFF SITE SELECT FILL	CY	1	$50.00	$50.00
	MATERIAL - LIMEROCK BASE MATERIAL	TN	1	$200.00	$200.00
	MATERIAL - #57 WASHED STONE	TN	1	$300.00	$300.00
	MATERIAL - ASPHALT PAVING (1.5" THICK; TYPE S-3)	SY	1	$600.00	$600.00
	MATERIAL - BAHIA SOD	SY	1	$10.00	$10.00
	SUB-CONTRACTOR - WELDER WITH TRUCK	HR	1	$125.00	$125.00
	SUB-CONTRACTOR - TRACTOR WITH 7' BUSH HOG	HR	1	$185.00	$185.00

$ 35,693,240.00

* Contractor Job Truck Mandatory Tools

	Tool	Minimum size	Quantity
1	Air compressor	20 CFM @ 90PSI	1
2	3/4" drive ratchet and socket set		1

3	1 inch drive air impact wrench		1
4	1 inch drive sockets	1-1/2" to 3"	1 each
5	Slug wrenches	1-1/2" to 3"	1
6	End wrenches	7/16" to 1-1/2"	2 each
7	Porta band saw w spare blades	4" opening	1
8	Sawzall w spare blades		1
9	Nylon slings 5,000 and 10,000 pound rated (vertical)	2" 2 ply/4" 2 ply	2 each
10	Grade 80 Chain 10,000 pound rated	1/2" X 10 ft	2
11	Clevis or Shackles 5 ton rated	5/8" alloy	4
12	Porta power 10 ton		1
13	Shovels- round and square point		3 each
14	Cutting torch set *see note*		1
15	Gas or diesel stick welder and accessories *see note*		1
16	Small diaphragm pump and accessories	2" suction	1
17	Tap and die set	1/2" to 2" NPT	1
18	Drill and bits for steel or ductile	1/2" to 2" NPT size	1 set
19	Pry bar	5 foot	1
20	Come along	2ton	2
21	Circular Saw and blades for cribbing/forms	7 1/2 inch	2
22	Generator 120/240 volt	3500 watt	1
23	Framing hammer and nails for forms		2

24	Screw gun and screws for forms and cribbing		1
25	Gas powered cutoff saw (K-12)	12inch	1
26	Chain saw for cribbing and for'ms	14 inch bar	1
27	Sledge hammers	4t/ and 6tl	1 each
28	Crew PPE to include Hard hat and gloves at minimum	as needed	per person

EXHIBIT "D"

Conditional Federal/Grant-Funded Contract Addendum

(Place Conditional Federal/Grant-Funded Contract Addendum behind this page)

EXHIBIT "D"
CONDITIONAL FEDERAL/GRANT-FUNDED CONTRACT ADDENDUM

1. Applicability

1.1 This Exhibit applies only if activated under Section 25 of the Agreement or under a Task Order. If not activated, this Exhibit is reserved and has no operative effect.
1.2 If activated, this Exhibit supplements the Agreement and applies to the federally funded or grant-funded Work only. Contractor shall comply with all applicable requirements of the federal award, grant agreement, pass-through entity, program rules, and applicable law.
1.3 The City may provide additional award-specific clauses, certifications, forms, wage determinations, reporting requirements, or flow-down provisions. Contractor shall comply with such requirements as a condition of performing the affected Work and receiving payment from the applicable funding source.

2. Federal Award and Grant Information

Federal/Grant Program: [insert]
Federal Awarding Agency: [insert]
Pass-Through Entity: [insert, if applicable]
Assistance Listing Number: [insert, if applicable]
Federal Award Identification Number: [insert, if applicable]
Award or Disaster Declaration Date: [insert, if applicable]
Project Number: [insert]
Special Award Conditions: [insert or attach]

3. Remedies for Breach

For contracts exceeding the simplified acquisition threshold, Contractor acknowledges that the City may exercise all administrative, contractual, legal, and equitable remedies available under the Contract Documents and applicable law if Contractor violates or breaches contract terms. Remedies may include withholding payment, requiring correction, suspension of Work, termination, procurement from alternate sources, damages, sanctions, and any other appropriate remedy.

4. Termination for Cause and Convenience

For contracts in excess of $10,000, the City may terminate the federally funded or grant-funded Work for cause or convenience as provided in the Agreement. The notice of termination will identify the effective date and the manner of termination. Contractor shall be paid only for authorized Work satisfactorily performed before the effective date of termination, subject to documentation, offsets, allowable cost requirements, and applicable grant rules.

5. Equal Employment Opportunity

Except as otherwise provided under 41 C.F.R. Part 60, if the Work is a federally assisted construction contract as defined in 41 C.F.R. § 60-1.3, Contractor shall comply with the equal opportunity clause in 41 C.F.R. § 60-1.4(b), which is incorporated by reference as if fully set forth

RESERVED

herein, and shall include the required clause in covered subcontracts and purchase orders.

6. Davis-Bacon Act and Copeland Anti-Kickback Act

When required by federal program legislation, all prime construction contracts in excess of $2,000 must include compliance with the Davis-Bacon Act, 40 U.S.C. §§ 3141-3148, as supplemented by Department of Labor regulations at 29 C.F.R. Part 5. If Davis-Bacon applies, Contractor shall pay laborers and mechanics at rates not less than the applicable wage determination, pay wages not less than once per week, submit certified payrolls if required, and comply with all applicable labor standards.
If Davis-Bacon applies, Contractor shall also comply with the Copeland "Anti-Kickback" Act, 40 U.S.C. § 3145, as supplemented by 29 C.F.R. Part 3, and shall not induce any person employed in the construction, completion, or repair of public work to give up any part of compensation to which the person is entitled. Contractor shall report suspected or reported violations to the City.

7. Contract Work Hours and Safety Standards Act

Where applicable, for contracts in excess of $100,000 that involve the employment of mechanics or laborers, Contractor shall comply with 40 U.S.C. §§ 3702 and 3704, as supplemented by Department of Labor regulations at 29 C.F.R. Part 5. Contractor shall compute wages based on a standard 40-hour workweek and shall compensate covered workers at not less than one and one-half times the basic rate of pay for hours worked in excess of 40 hours in a workweek. No laborer or mechanic shall be required to work under unsanitary, hazardous, or dangerous conditions. These requirements do not apply to purchases of supplies, materials, or articles ordinarily available on the open market, or to contracts for transportation or transmission of intelligence.

8. Rights to Inventions

If the federal award meets the definition of "funding agreement" under 37 C.F.R. § 401.2(a), and the Work involves substitution of parties, assignment, or performance of experimental, developmental, or research work under that funding agreement, Contractor shall comply with 37 C.F.R. Part 401 and any implementing regulations issued by the awarding agency.

9. Clean Air Act and Federal Water Pollution Control Act

For contracts and subgrants exceeding $150,000, Contractor shall comply with all applicable standards, orders, and regulations issued pursuant to the Clean Air Act, 42 U.S.C. §§ 7401-7671q, and the Federal Water Pollution Control Act, 33 U.S.C. §§ 1251-1387. Contractor shall report each violation to the City, and the City will report violations as required to the federal awarding agency and the appropriate EPA regional office. Contractor shall include these requirements in each covered subcontract exceeding $150,000.

10. Debarment and Suspension

Contractor shall comply with Executive Orders 12549 and 12689 and 2 C.F.R. Part 180. Contractor shall not enter into covered transactions with parties listed on the governmentwide exclusions in the System for Award Management. Contractor shall verify that Contractor, its principals, and its affiliates are not excluded or disqualified and shall include this requirement in lower-tier covered

RESERVED

transactions.

11. Byrd Anti-Lobbying Amendment

For awards exceeding $100,000, Contractor shall comply with the Byrd Anti-Lobbying Amendment, 31 U.S.C. § 1352. Contractor shall certify that it has not and will not use federal appropriated funds to pay any person or organization for influencing or attempting to influence an officer or employee of an agency, a member of Congress, an officer or employee of Congress, or an employee of a member of Congress in connection with obtaining a federal contract, grant, or other covered award. Contractor shall disclose lobbying with non-federal funds as required and shall require each lower tier to make the same certification and disclosure.

12. Procurement of Recovered Materials

Contractor shall comply with 2 C.F.R. § 200.323 and Section 6002 of the Solid Waste Disposal Act, as amended by the Resource Conservation and Recovery Act, to the extent applicable. Contractor shall procure designated items containing the highest percentage of recovered materials practicable, consistent with competition and performance requirements, when the purchase price exceeds the applicable threshold or the value of the quantity acquired during the preceding fiscal year exceeded the applicable threshold. Contractor shall also procure solid waste management services in a manner that maximizes energy and resource recovery and shall support the City's affirmative procurement program where applicable.

13. Domestic Preferences for Procurements

As appropriate and to the extent consistent with law, Contractor shall comply with 2 C.F.R. § 200.322 by providing a preference for the purchase, acquisition, or use of goods, products, or materials produced in the United States, including iron, aluminum, steel, cement, and other manufactured products, when the Work is performed under a federal award.

14. Prohibition on Certain Telecommunications and Video Surveillance Equipment or Services

Contractor shall comply with 2 C.F.R. § 200.216 and shall not obligate or expend federal funds to procure, obtain, extend, renew, or enter into a contract to procure or obtain covered telecommunications equipment or services as a substantial or essential component of any system or as critical technology as part of any system. Contractor shall include this prohibition in applicable subcontracts and purchase orders.

15. Build America, Buy America

If the Work is an infrastructure project funded by a federal financial assistance program subject to the Build America, Buy America Act, Contractor shall comply with all applicable domestic content procurement preference requirements for iron, steel, manufactured products, and construction materials permanently incorporated into the project, unless a waiver applies. Contractor shall provide certifications, documentation, and product information required by the City, funding agency, or pass-through entity.

16. Small and Minority Businesses, Women's Business Enterprises, Veteran-Owned Businesses,

RESERVED

and Labor Surplus Area Firms

Contractor shall take the affirmative steps required by 2 C.F.R. § 200.321 to assure that small businesses, minority businesses, women's business enterprises, veteran-owned businesses, and labor surplus area firms are used when possible, including, as applicable, placing such businesses on solicitation lists, soliciting them when they are potential sources, dividing requirements when economically feasible, establishing delivery schedules that encourage participation, using appropriate assistance organizations, and requiring subcontractors to take the same affirmative steps.

17. Bonding Requirements for Federal Construction or Facility Improvement Contracts

For construction or facility improvement contracts or subcontracts exceeding the simplified acquisition threshold, Contractor shall comply with the bonding requirements in 2 C.F.R. § 200.326 when the federal award requires such bonding, including bid guarantee, performance bond, and payment bond requirements unless the federal agency or pass-through entity determines that the City's bonding policy and requirements adequately protect the federal interest.

18. Access to Records; Retention

Contractor shall provide the City, the federal awarding agency, the pass-through entity, the Comptroller General of the United States, and their authorized representatives access to any documents, papers, records, and other materials that are directly pertinent to the federal or grant-funded Work for the purpose of making audits, examinations, excerpts, and transcriptions. Contractor shall retain records for the period required by 2 C.F.R. Part 200, the award terms, the Agreement, and applicable law, whichever is longer.

19. No Obligation by Federal Government

The federal government is not a party to this Agreement or any Task Order and is not subject to any obligations or liabilities to the City, Contractor, or any other party arising from the Agreement or Work.

20. Program Fraud and False or Fraudulent Statements

Contractor acknowledges that 31 U.S.C. Chapter 38 and other federal laws concerning fraud, false claims, and false statements may apply to Contractor's actions pertaining to federally funded or grant-funded Work. Contractor shall not submit false, fictitious, fraudulent, or misleading claims, certifications, invoices, records, or statements.

21. Additional Award-Specific Terms

If the federal awarding agency, pass-through entity, grant agreement, disaster assistance program, or other funding source requires additional clauses, certifications, forms, reporting, wage determinations, environmental/historic preservation conditions, civil rights provisions, procurement certifications, or other requirements, such requirements are incorporated into the affected Task Order upon written notice by the City. Contractor shall execute additional documents reasonably required by the City to document compliance.

RESERVED

CITY COMMISSION MEETING
CITY OF ST. PETE BEACH
COMMISSION CHAMBERS

Agenda Report

Agenda Title Name: Authorize the City Manager to execute the Agreement with Ajax Paving Industries of Florida, LLC for Civil On-Call Construction Services on an as-needed basis in an amount not to exceed annually appropriated funding.

Action Request: Motion to authorize the City Manager to execute the Agreement with Ajax Paving Industries of Florida, LLC for Civil On-Call Construction Services on an as-needed basis in an amount not to exceed annually appropriated funding.

Strategic Objective: Reliable Infrastructure

Date: June 23, 2026

Prepared By: Camden Mills, Public Services Director

Through: Frances Robustelli, City Manager

Summary of Issue: The City publicly advertised a Request for Proposals (RFP) for a task work order-driven Civil On-Call Construction Services contract. Five (5) responsive proposals were received on March 18, 2026. Following evaluation, the City's selection committee recommended award to Ajax Paving Industries of Florida LLC, BCS Construction Group, Cathcart Construction Company Florida LLC, PCS Civil LLC, and Southern Road and Bridge LLC

- Qualifications and Experience
- References and Past Performance
- Capacity to Perform the Work
- Cost

The contract provides not-to-exceed unit prices for labor, materials, equipment, tools, transportation, and incidentals necessary to perform civil construction services on an as-needed basis throughout the City. Projects may include roadway and intersection improvements, drainage upgrades, ADA improvements, sidewalk construction, alley improvements, signing and pavement markings, recreational trails, traffic signal improvements, and

intelligent transportation system (ITS) infrastructure.

Work will be authorized by task order on an as-needed basis in an amount not to exceed annually appropriated funding. The initial contract term is three (3) years with the option for two (2) additional one (1) year renewals upon mutual agreement and annual appropriation of funds.

Approval of this agreement will provide the City with qualified contractors to perform civil infrastructure improvements in a timely and cost-effective manner, improve responsiveness to maintenance and capital project needs, and support implementation of the City's transportation, drainage, utility, and public infrastructure programs.

Funding:

301.5410.563000 Improvements Other Than Buildings (remaining balance $211,746.90)

301.5411.563000 Improvements Other Than Buildings (remaining balance $8,478,760.96)

301.5726.563000 Improvements Other Than Buildings (remaining balance $825,791.26)

Other CIP funding sources may be used based on the available annual budget

Attachments:

1. Ajax Paving Contract Signed

CITY OF ST. PETE BEACH, FLORIDA
SERVICES AGREEMENT

Civil On-Call Construction Services

This is an Agreement (the "Agreement") entered into by and between the **CITY OF ST. PETE BEACH** (hereinafter "City") and **AJAX PAVING IDUSTRIES OF FLORIDA, LLC.** (hereinafter "Contractor"). The City and Contractor together shall be referred to as the "parties."

WHEREAS, The City properly issued a Request for Proposals, attached and incorporated hereto as Exhibit "B" and the City Commission authorized the selection of Contractor at its June 23, 2026, public hearing.

WHEREAS, City desires to purchase from Contractor the services described in this Agreement.

WHEREAS, Contractor is in the business of providing the services described herein, and has submitted an appropriate proposal to the City to provide the same.

WHEREAS, this Agreement has been properly approved by the appropriate authority of the City and the Contractor.

NOW, THEREFORE, upon the mutual covenants contained herein, and other good and valuable considerations, the sufficiency of which is hereby acknowledged, the parties hereto hereby agree to the following:

1. Recitals. The foregoing recitals are true and correct and incorporated herein by reference.

2. Standard Contract Addendum. The attached Standard Contract Addendum, which contains all the Florida Statutorily required provisions applicable to this Agreement, is attached hereto as Exhibit "A" and its provisions modify and supplement this Agreement.

3. Scope of Services. The Contractor must perform all work for the City required by the contract documents as set forth below:

a. Contractor will furnish all labor, materials, and equipment necessary as indicated in the Request for Bids (Exhibit "B") in the amount of Not To Exceed the Annual Budgeted amount. Funding will be awarded by Task Orders.

b. Contractor must supervise the workforce to ensure that all workers conduct themselves and perform their work in a safe and professional manner. Contractor must comply with all OSHA safety rules and regulations in the operation of equipment and in the performance of the work. Contractor must at all times have a competent field supervisor on the job site to enforce these policies and procedures at the Contractor's expense.

c. Contractor will provide the City with seventy-two (72) hours written notice prior to the beginning of work under this Agreement and prior to any schedule change with the exception of changes caused by inclement weather.

d. Contractor must comply with any and all Federal, State, and local laws and regulations

now in effect, or hereinafter enacted during the term of this Agreement, which are applicable to the Contractor, its employees, agents or subcontractors, if any, with respect to the work and services described herein. The Contractor further warrants that there has been no violation of copyrights or patent rights either in the United States of America or in foreign countries in connection with the work of the contract.

e. Contractor warrants to the City that all goods and materials furnished under the contract will be new unless otherwise specified and that contractor possesses good, clear, and marketable title to said goods and there are no pending liens, claims, or encumbrances whatsoever against said goods. All work not conforming to these requirements, including substitutions not properly approved and authorized may be considered defective. Contractor further warrants that all goods, materials and workmanship furnished, whether furnished by the Contractor or its subcontractors and suppliers, will comply with the specifications, drawings and other descriptions supplied or adopted. Last, Contractor warrants all material and workmanship for a minimum of (1) year from date of project completion and acceptancy by the City. If within one (1) year after acceptance by the City, or within such larger period of time as may be prescribed by law any of the work is found to be defective or not in accordance with the contract documents, the Contractor will, after receipt of a written notice from the City to do so, promptly correct the work.

4. Damages. Time is of the essence in the performance of this Agreement. City shall be entitled to liquidated damages in the amount of $500 per day, for each day after the date set forth in paragraph 10, that Contractor has failed to properly and completely deliver all goods or provide all service specified herein. The Contractor specifically acknowledges that the foregoing sum is reasonable and does not constitute a penalty.

5. Remedies.

   a. Damages. The City reserves the right to recover any ascertainable actual damages incurred as a result of the failure of the Contractor to perform in accordance with the requirements of this Agreement, or for losses sustained by the city resultant from the Contractor's failure to perform in accordance with the requirements of this Agreement.

   b. Correction of Work. If, in the judgment of the City, work provided by the Contractor does not conform to the requirements of this Agreement, or if the work exhibits poor workmanship, the city reserves the right to require that the Contractor correct all deficiencies in the work to bring the work into conformance without additional cost to the City, and/or replace any personnel who fail to perform in accordance with the requirements of this Agreement. The City is the sole judge of non-conformance and the quality of workmanship.

6. Waiver of Liens. Prior to final payment of the Contract Sum, a final waiver of lien must be submitted by all suppliers, subcontractors, and/or Contractors who worked on the project that is the subject of this Agreement.

7. Warranties.
   a. Warranty of Title. Contractor warrants to the City that all goods and materials furnished

under the contract will be new unless otherwise specified and that Contractor possesses good, clear, and marketable title to said goods and there are no pending liens, claims, or encumbrances whatsoever against said goods. All work not conforming to these requirements, including substitutions not properly approved and authorized may be considered defective.

b. Warranty of Specifications. The Contractor warrants that all goods, materials, workmanship furnished, whether by the Contractor or its subcontractors and suppliers, will comply with the specifications, drawings and other descriptions supplied or adopted.

c. Warranty of Merchantability. The Contractor warrants all material and workmanship for a minimum of one (1) year from date of project completion and acceptance by the City. If within one (1) year after acceptance by the city, or within such larger period of time as may be described by law any of the work is found to be defective or not in accordance with the contract documents, the Contractor must after receipt of a written notice from the City to do so, promptly correct the work unless the City has previously given the Contractor a written acceptance of such condition.

8. Term. This Agreement will remain in effect for a period of (3) three years with (2) two, (1) one-year extensions from the Effective Date.

9. Effective date. The "Effective Date" of this Agreement shall be the date this Agreement has been executed by all parties.

10. Termination. This Agreement may be canceled by the City when:
   a. Sufficient funds are not available to continue its full and faithful performance to the Agreement.
   b. Sub-standard or non-performance of Agreement.
   c. The City wishes to terminate the Agreement at any time and for any reason, upon giving thirty (30) days prior written notice to the Contractor.

11. Fiscal Non-funding. If funds for the requested services described herein are not appropriated via the annual budget adoption process, the City reserves the right to cancel the Agreement immediately upon written notice to the Contractor.

12. Non-Exclusivity. Contractor acknowledges that the City may enter into agreements with other consultants or may have its own employees complete the work for services similar to the services that are subject to this Agreement.

13. Compensation. Upon Contractor's satisfactory full performance of the services or in accordance with the payment schedule provided in the attached proposal, City shall pay Contractor, as full consideration for services provided in this Agreement.

14. Insurance. To the extent that this Agreement requires Contractor to provide any services of any kind, Contractor and all of Contractor's subcontractors shall maintain public liability insurance in a combined single limit for bodily injury and property damage in the amount of not less than $1,000,000.00, satisfactory to the City Manager, naming the City as an additionally named insured and providing coverage up through and including the final performance of any services provided

herein. Contractor and all of Contractor's subcontractors shall maintain in full force and effect a policy of worker's compensation insurance for all of Contractor's employees in accordance with applicable state and federal law. Said insurance coverage shall include employer's liability with a single limit of $100,000.00 per accident or occurrence. Contractor shall present City with a certificate for all the foregoing insurance, at the time of executing this Agreement and at such other times requested by the City.

The Contractor waives all rights against the City, its consultants, separate contractors, if any, and any of its subcontractors, agents and employees, for any and all damages caused to the extent covered by insurance described herein and obtained pursuant to this Section or other property insurance applicable to the services and product provided under this Agreement. The City shall require of the Contractor, Contractor's consultants, separate contractors, if any, and the subcontractors, sub-subcontractors, agents and employees of any of them, by appropriate agreements, written where legally required for validity, similar waivers each in favor of other parties enumerated herein. The policies shall provide such waiver of subrogation by endorsement otherwise. A waiver of subrogation shall be effective as to a person or entity even though that person or entity would otherwise have a duty of indemnification, contractual or otherwise, did not pay the insurance premium directly or indirectly, and whether or not the person or entity had an insurable interest in the property damaged.

15. Indemnification. In consideration of the payment of ten dollars as part of the compensation described herein, such sum being specifically found by Contractor to be sufficient consideration for this indemnification, Contractor shall indemnify, defend and hold the City harmless for itself, its past/present/future elected and appointed officials, its employees, agents and assigns, from and against any and all losses, claims, damages, suits, actions, liability or demands, including attorneys' fees and costs of litigation through all appellate proceedings, arising from the performance or non-performance of this Agreement, whether caused in part by the City or not, and in connection with violations of copyrighted or trademarked materials used by Contractor, loss of life, bodily or personal injury, or property damage, including loss of use thereof, directly or indirectly caused by, resulting from, arising out of or occurring in connection with the operations of the Contractor or its officers, employees, agents, subcontractors, or independent Contractors, excepting only such loss of life, bodily or personal injury, or property damage solely attributable to the gross negligence or willful misconduct of the City or its elected or appointed officials and employees. In any and all claims against the City, or any of their agents or employees by any employee of the Contractor any subcontractor, anyone directly or indirectly employed by any of them or anyone for whose acts any of them may be liable, the indemnification obligation under this paragraph is not limited in any way by any limitation in this amount or type of damages compensation or benefits payable by or for the Contractor or any subcontractor under Workers' Compensation Acts, Disability Benefit Acts or other Employee Benefit Acts. Nothing contained herein is intended nor may it be construed, to waive City's rights and immunities under the common law or Section 768.28, Florida Statutes, as amended from time to time; nor will anything included herein be construed as consent to be sued by any third parties in any matter arising out of this Agreement. To the extent considered necessary by the Contract Administrator and the City Attorney, any sums due Contractor under this Agreement may be retained by the City until all of the City's claims subject to this indemnification obligation have been settled or otherwise resolved, and any amount withheld is not subject to payment of interest by the City. The above provisions

will survive the termination or expiration of this Agreement and will pertain to any occurrence during the term of this Agreement, even though the claim may be made after the termination or expiration hereof.

16. Discriminatory Vendor List. Contractor hereby acknowledges its continuous duty to disclose to the City if the Contractor or any of its affiliates, as defined by Section 287.134 (1)(a), Florida Statutes, are placed on the Discriminatory Vendor List. Pursuant to Section 287-134 (2)(a), Florida Statutes: "An entity or affiliate who has been placed on the discriminatory vendor list may not submit a bid, proposal, or reply on a contract to a public entity; may not submit a bid or proposal, or reply on a contract with a public entity for the construction or repair of a public building or public work; may not submit bids, proposals, or replies on leases of real property to a public entity; may not be awarded or perform work as a contractor, supplier, subcontractor, or consultant under a contract with any public entity; and may not transact business with any public entity."

17. Independent Contractor. This Agreement does not create an employee/employer relationship between the parties. It is the intent of the parties that the Contractor is an independent contractor under this Agreement and not the City's employee for any purposes, including but not limited to, the application of the Fair Labor Standards Act minimum wage and overtime payments, Federal Insurance Contribution Act, the Social Security Act, the Federal Unemployment Tax Act, the provisions of the Internal Revenue Code, the State Worker's Compensation Act, and the State Unemployment Insurance law. The Contractor will retain sole and absolute discretion in the judgment of the manner and means of carrying out Contractor's activities and responsibilities hereunder provided, further that administrative procedures applicable to services rendered under this Agreement will be those of Contractor, which policies of Contractor will not conflict with City, State, or United States policies, rules, or regulations relating to the use of Contractor's funds provided for herein. The contractor agrees that it is a separate and independent enterprise from the City, that it had full opportunity to find other business, that it has made its own investment in it business, and that it will utilize a high level of skill necessary to perform the work. This Agreement must not be construed as creating any joint employment relationship between the Contractor and the City and the City will not be liable for any obligation incurred by Contractor, including but not limited to unpaid minimum wages and/or overtime premiums.

18. Audit Rights. The City reserves the right to audit the records of the Contractor for the commodities and/or serves provided under the contract at any time during the performance and term of the contract and for a period of five (5) years after completion and acceptance by the City. If required by the City, the Contractor agrees to submit to an audit by an independent certified public accountant selected by the City. The Contractor must allow the City to inspect, examine and review the records of the Contractor in relation to this Agreement at any an all times during normal business hours during the term of the Agreement.

19. Exhibits. The following Exhibits shall be attached, incorporated, and made a part of this Agreement:
    a. Standard Contract Addendum (Exhibit "A")
    b. Request for Bid/Proposal (Exhibit "B")
    c. Vendor Bid/Proposal (Exhibit "C")

d. Conditional Federal/Grant-Funded Contract Addendum (Exhibit "D")

20. Notices. All notices sent pursuant to this Agreement shall be given in writing via certified mail or overnight courier and shall be delivered to the following addresses:

As to Contractor:	**As to City:**
Ajax Paving Industries of Florida, LLC.	City Manager
One Ajax Drive	City of St. Pete Beach
Venice, FL 34275	155 Corey Avenue
	St. Pete Beach, FL 33706
With Copy To:	**With Copy To:**
flestimate@ajaxpaving.com	attorney@stpetebeach.org

21. Conflicts and Severability. To the extent that any terms in the attached proposal conflict with the terms of this Agreement, the terms of this Agreement shall control and supersede such conflicting terms in the attached proposal, to the extent of such conflict. If any section, part of section, paragraph, clause, phrase, or word of this Agreement is declared invalid, the remaining provisions of this Agreement shall not be affected.

22. Amendments. This document and exhibits embody the entire Agreement of the parties. There are no promises, terms, conditions, or representations binding on either party hereto, other than those contained herein; and this document shall supersede all previous communications, representations, and/or agreements between the parties hereto, whether written or oral. This Agreement shall not be modified by any oral statement, communication, Agreement, course of conduct, or by anything other than a writing signed by the parties. This Agreement may be amended or modified only in writing signed by all parties hereto.

23. Jurisdiction, Venue, Attorney Fees. This Agreement shall be governed and construed according to the laws of Florida, and venue for any action arising herefrom shall be in Pinellas County, Florida. The prevailing party in any action to enforce or interpret this Agreement shall be entitled to reasonable attorney's fees incurred through all appellate proceedings.

24. Assignment. This Agreement shall be binding upon the parties, their successors, assigns, and legal representatives. Contractor shall not assign or otherwise transfer any of the rights or duties under this Agreement, without the express written consent of the City.

25. Counterparts. This Agreement may be executed and delivered in any number of counterparts, each of which so executed and delivered shall be deemed to be an original and all of which shall constitute one and the same instrument. Facsimile, documents executed, scanned and transmitted electronically and electronic signatures shall be deemed original signatures for purposes of this Agreement and all matters related thereto, with such facsimile, scanned and electronic signatures having the same legal effect as original signatures.

26. Authority. Contractor hereby acknowledges that the person executing this Agreement on behalf of Contractor has the full authority to do so and to bind Contractor to the terms hereof.

IN WITNESS WHEREOF, the Parties have executed this Agreement on the day and year set forth below.

Under penalties of perjury, and pursuant to Sec. 92.525, Fla. Stat., Contractor declares that Contractor has read the Section 15 of the Standard Contract Addendum, Exhibit "A", and that the facts stated in it are true.

Contractor Name
Ajax Paving Industries of Florida, LLC.

Signature: _____

By: Christine Alvaro

Its: VP of Estimating

Date: June 3, 2026

City of St. Pete Beach:

Signature: _____

By: Frances Robustelli

Its: City Manager

Date: _____

APPROVED AS TO FORM
AND LEGAL SUFFICIENCY:

_____
Ralf Brookes
City Attorney

ATTEST:

_____
Renee Rose
City Clerk

EXHIBIT "A"

Standard Contract Addendum

(Place Standard Form Addendum behind this page)

CITY OF ST. PETE BEACH, FLORIDA
STANDARD CONTRACT ADDENDUM

THIS STANDARD CONTRACT ADDENDUM is made and entered into this _____ day of _____, 2026, by and between the CITY OF ST. PETE BEACH, a Florida municipality, hereinafter referred to as the "City", and _____, hereinafter referred to as "Contractor", concerning that certain agreement dated the ____ day of _____, 2026 ("Agreement") and titled _____.

WITNESSETH:

WHEREAS, Section 119.0701, Fla. Stat., requires that certain public agency contracts must include certain statutorily required provisions concerning the contractor's compliance for Florida's Public Records Act; and

WHEREAS, Section 768.28, Fla. Stat., sets forth certain mandatory limitations on indemnification and liability for Florida public agencies; and

WHEREAS, Florida law requires that public agency contracts be subject to non-appropriation and thereby contingent upon appropriation during the public agency's statutorily mandated annual budget approval process; and

WHEREAS, Section 448.095, Fla. Stat., imposes certain obligations on public agencies with regard to the use of the E-Verify system by their contractors and subcontractors; and

WHEREAS, Section 287.133 and 287.135, Fla. Stat., provides restrictions on local governments contracting with companies that are on certain Scrutinized Companies lists or convicted vendor list; and

WHEREAS, additional terms required by Sections 282.3185(5) and (6) Fla. Stat. related to data management and Section 287.05701 Fla. Stat. related to social government and corporate activism are also added by virtue of this Addendum; and

WHEREAS, Section 286.101, Florida Statutes contains a list of "foreign countries of concern" including, the People's Republic of China, the Russian Federation, the Islamic Republic of Iran, the Democratic People's Republic of Korea, the Republic of Cuba, the Venezuelan regime of Nicolás Maduro, or the Syrian Arab Republic, including any agency of or any other entity under significant control of such "foreign country of concern". Any entity that does business with a state agency or political subdivision must disclose certain of their dealings with those "foreign countries of concern" to the Florida Department of Financial Services; and

WHEREAS, Section 787.06(13), Fla. Stat. provides that when a contract is executed, renewed, or extended between a nongovernmental entity and a governmental entity, the nongovernmental entity must provide the governmental entity with an affidavit signed by an

officer or a representative of the nongovernmental entity under penalty of perjury attesting that the nongovernmental entity does not use coercion for labor or services as defined in such statute;

NOW, THEREFORE, in consideration of the covenants set forth herein, the parties agree to this addendum as follows:

1. Amendment. This Addendum hereby amends and supplements the terms of the Agreement. In the event of a conflict between the terms of the Agreement and terms of the Addendum, the terms of the Addendum shall prevail.

2. Public Records Compliance. Contractor agrees that, to the extent that it may "act on behalf" of the City within the meaning of Section 119.0701(1)(a), Florida Statutes in providing its services under this Agreement, it shall:

(a) Keep and maintain public records required by the public agency to perform the service.

(b) Upon request from the public agency's custodian of public records, provide the public agency with a copy of the requested records or allow the records to be inspected or copied within a reasonable time at a cost that does not exceed the cost provided in this chapter or as otherwise provided by law.

(c) Ensure that public records that are exempt or confidential and exempt from public records disclosure requirements are not disclosed except as authorized by law for the duration of the contract term and following completion of the contract if the contractor does not transfer the records to the public agency.

(d) Upon completion of the contract, transfer, at no cost, to the public agency all public records in possession of the contractor or keep and maintain public records required by the public agency to perform the service. If the contractor transfers all public records to the public agency upon completion of the contract, the contractor shall destroy any duplicate public records that are exempt or confidential and exempt from public records disclosure requirements. If the contractor keeps and maintains public records upon completion of the contract, the contractor shall meet all applicable requirements for retaining public records. All records stored electronically must be provided to the public agency, upon request from the City's custodian of public records, in a format that is compatible with the information technology systems of the City.

(e) Pursuant to Section 119.0701(2)(a), Fla. Stat., **IF THE CONTRACTOR HAS QUESTIONS REGARDING THE APPLICATION OF CHAPTER 119, FLORIDA STATUTES, TO THE CONTRACTOR'S DUTY TO PROVIDE PUBLIC RECORDS RELATING TO THIS AGREEMENT, CONTACT THE CUSTODIAN OF PUBLIC RECORDS AT:**

Renee Rose
City Clerk/Public Records Custodian
cityclerk@stpetebeach.org

Phone: 727-363-9220
155 Corey Avenue
St. Pete Beach, FL 33706
Fax: 727-541-8040

3. Public Records Compliance Indemnification. Contractor agrees to indemnify and hold the City harmless against any and all claims, damage awards, and causes of action arising from the contractor's failure to comply with the public records disclosure requirements of Section 119.07(1), Florida Statutes, or by contractor's failure to maintain public records that are exempt or confidential and exempt from the public records disclosure requirements, including, but not limited to, any third party claims or awards for attorneys' fees and costs arising therefrom. Contractor authorizes the public agency to seek declaratory, injunctive, or other appropriate relief against Contractor in Pinellas County Circuit Court on an expedited basis to enforce the requirements of this section.

4. Compliance/Consistency with Section 768.28, Fla. Stat. Any indemnification or agreement to defend or hold harmless by City specified in the Agreement shall not be construed as a waiver of City's sovereign immunity, and shall be limited to such indemnification and liability limits consistent with the requirements of Section 768.28, Fla. Stat. and subject to the procedural requirements set forth therein. Any other purported indemnification by City in the Agreement in derogation hereof shall be void and of no force or effect.

5. Non-appropriation. City's performance and obligation to pay under this Agreement is contingent upon an appropriation during the City's annual budget approval process. If funds are not appropriated for a fiscal year, then the Contractor shall be notified as soon as is practical by memorandum from the City Manager or designee that funds have not been appropriated for continuation of the Agreement, and the Agreement shall expire at the end of the fiscal year for which funding has been appropriated. The termination of the Agreement at fiscal year end shall be without penalty or expense to the City subject to the City paying all invoices for services rendered during the period the Agreement was funded by appropriations.

6. E-Verify Compliance. By entering into this Agreement, the Contractor is obligated to comply with the provisions of Section 448.095, Fla. Stat. "Employment Eligibility," as amended from time to time. This includes but is not limited to register with and use the E-Verify System to verify the work authorization status of all newly hired employees, and requiring all subcontractors to provide an affidavit to Contractor attesting that the subcontractor does not employ, contract with, or subcontract with, an unauthorized alien. Contractor agrees to maintain a copy of such affidavit for the duration of this Agreement. Failure to comply with this paragraph will result in the termination of this Agreement as provided in Section 448.095, Fla. Stat., as amended and Contractor will not be awarded a public contract for at least one (1) year after the date on which the Agreement was terminated. Contractor will also be liable for any additional costs to the City as a result of the termination of this Agreement in accordance with this paragraph. Contractor affirmatively states, under penalty of perjury, that in accordance with Section 448.095, Fla. Stat., Contractor is registered with and uses the E-Verify system to verify the work authorization status of all newly hired employees, that in accordance with such statute, Contractor requires from each of its subcontractors an affidavit stating that the subcontractor does not employ, contract with, or

subcontract with an unauthorized alien, and that Contractor is otherwise in compliance with Sections 448.09 and 448.095, Fla. Stat.

7. Compliance/Consistency with Scrutinized Companies Provisions of Florida Statutes. Section 287.135(2)(a), Fla. Stat., prohibits a company from bidding on, submitting a proposal for, or entering into or renewing a contract for goods or services of any amount if, at the time of contracting or renewal, the company is on the Scrutinized Companies that Boycott Israel List, created pursuant to Section 215.4725, Fla. Stat., or is engaged in a boycott of Israel. Section 287.135(2)(b), Fla. Stat., further prohibits a company from bidding on, submitting a proposal for, or entering into or renewing a contract for goods or services over one million dollars ($1,000,000) if, at the time of contracting or renewal, the company is on either the Scrutinized Companies with Activities in Sudan List or the Scrutinized Companies with Activities in the Iran Petroleum Energy Sector List, both created pursuant to section 215.473, Fla. Stat., or the company is engaged in business operations in Cuba or Syria. Contractor hereby certifies that Contractor is not listed on any of the following: (i) the Scrutinized Companies that Boycott Israel List, (ii) Scrutinized Companies with Activities in Sudan List, or (iii) the Scrutinized Companies with Activities in the Iran Petroleum Energy Sector List. Contractor further hereby certifies that Contractor is not engaged in a boycott of Israel or engaged in business operations in Cuba or Syria. Contractor understands that pursuant to section 287.135, Fla. Stat., the submission of a false certification may subject Contractor to civil penalties, attorney's fees, and/or costs. Contractor further understands that any contract with City for goods or services of any amount may be terminated at the option of City if Contractor (i) is found to have submitted a false certification, (ii) has been placed on the Scrutinized Companies that Boycott Israel List, or (iii) is engaged in a boycott of Israel. And, in addition to the foregoing, if the amount of the contract is one million dollars ($1,000,000) or more, the contract may be terminated at the option of City if the company is found to have submitted a false certification, has been placed on the Scrutinized Companies with Activities in Sudan List or the Scrutinized Companies with Activities in the Iran Petroleum Energy Sector List, or has been engaged in business operations in Cuba or Syria.

8. Disclosure Requirements for "Foreign Countries of Concern". CONTRACTOR shall comply with the disclosure requirements set forth is Section 286.101 (3) (a), Fla. Stat., which requires "Any entity that applies to a state agency or political subdivision for a grant or proposes having a contract value of $100,000 or more shall disclose to the state agency or political subdivision any current or prior interest of, any contract with, or any grant or gift received from a "foreign country of concern" if such interest, contract, grant or gift received from a "foreign country of concern" if such interest, contract, grant or gift has a value of $50,000 or more and such interest existed at any time or such contract, grant or gift was received or in force at any time during the previous five (5) years. Such disclosure shall contain the name and mailing address of the disclosing entity, the amount of the gift or the value of the interest disclosed, the applicable "foreign country of concern" and, if applicable the date of termination of the contract or interest, the date of receipt of the grant or gift and the name of the agent or controlled entity that is the source or interest holder. Within one (1) year before applying for any grant or proposing any contract, such entity must provide a copy of such disclosure to the Department of Financial Services". Pursuant to Section 286.101(7), Fla. Stat.: "In addition to any fine assessed under [section 286.101(7)(a), F.S.], a final order determining a third or subsequent violation by an entity other than a state agency or political subdivision shall automatically disqualify the entity from

eligibility for any grant or contract funded by a state agency or any political subdivision until such ineligibility is lifted by the Administration Commission for good cause."

9. Venue and Jurisdiction. Notwithstanding any of other provision to the contrary, this Agreement and the parties' actions under this Agreement shall be governed by and construed under the laws of the State of Florida, without reference to conflict of law principles. As a material condition of this Agreement, each Party hereby irrevocably and unconditionally: i) consents to submit and does submit to the jurisdiction of the Circuit Court in and for Pinellas County, Florida for any actions, suits or proceedings arising out of or relating to this Agreement. Both parties waive any right to file an action, suit or proceeding in Federal Court or remove any action, suit or proceeding to Federal Court.

10. Attorneys' Fees and Costs. Notwithstanding any of other provision to the contrary, if litigation ensues regarding this Agreement, each party hereto shall bear its own attorneys' fee and costs.

11. Public Entities Crime or Convicted Vendor List. Contractor agrees and assumes a continuous duty to disclose to the City if the Contractor or any of its affiliates as defined by Section 287.133(1)(a), Florida Statutes are placed on the Convicted Vendor List or the Antitrust Violator Vendor List maintained by the Florida Department of Management Services.

12. Data Management; Notice of Breach. Contractor shall cooperate with the City and provide timely incident reporting, response activities/fact gathering, public and agency notification, severity level assessment, after-action reports, etc., which the City must report in accordance with Sections 282.3185(5) & (6), Florida Statutes in the event of a data breach.

13. Environmental and Social Government and Corporate Activism. The City has not given preference or requested documentation from the Contractor based on Contractor's social, political or ideological interest. Contractor agrees to similarly not request documentation or give preference to any subcontractor based on the subcontractor's social, political or ideological interests.

14. Taxes. The City shall not be liable for any taxes and assessments imposed by a federal, state or local governmental agency to the extent that the City is exempt from same by Florida law, including but not limited to any sales or use tax.

15. No coercion for labor or services. The Contractor swears under penalty of perjury that the Contractor does not use coercion for labor or services as defined as follows:

"Coercion" means:

1. Using or threatening to use physical force against any person;
2. Restraining, isolating, or confining or threatening to restrain, isolate, or confine any person without lawful authority and against her or his will;
3. Using lending or other credit methods to establish a debt by any person when labor or services are pledged as a security for the debt, if the value of the labor or services as reasonably assessed is not applied toward the liquidation of the debt, the length and nature of the labor or services are not respectively limited and defined;

4. Destroying, concealing, removing, confiscating, withholding, or possessing any actual or purported passport, visa, or other immigration document, or any other actual or purported government identification document, of any person;

5. Causing or threatening to cause financial harm to any person;

6. Enticing or luring any person by fraud or deceit; or

7. Providing a controlled substance as outlined in Schedule I or Schedule II of Sec. 893.03, Fla. Stat. to any person for the purpose of exploitation of that person.

16. Force Majeure. The City reserves the right to suspend, modify or terminate this contract in the event of an act of god or act of man beyond the control of the parties, including but not limited to a hurricane, tropical storm, tornado, or other destructive weather event, flooding, pandemic, plague, war, armed conflict, domestic or foreign terrorism, riot, labor condition, state or federal governmental action, and catastrophic Internet disturbance, making performance inadvisable, economically impracticable, illegal, or impossible.

17. Additional Terms. Notwithstanding any of other provision to the contrary, the parties agree as follows:

A. None.

IN WITNESS WHEREOF, the parties hereto have executed and delivered this instrument on the days and year indicated below and the signatories below to bind the parties set forth herein.

Under penalties of perjury, and pursuant to Sec. 92.525, Fla. Stat., Contractor declares that Contractor has read the foregoing Section 15 above and that the facts stated in it are true.

Contractor:

AJAX PAVING INDUSTRIES OF FLORIDA, LLC CORPORATE SEAL 2008 FLORIDA

Print Name: Christie Alvaro

Title: Vice President of Estimating

Company: Ajax Paving Industries of Florida, LLC

ATTEST:

Renee Rose, City Clerk

City of St. Pete Beach:

Frances Robustelli, City Manager

EXHIBIT "B"

Request for Bid/Proposal

(Place Request for Bid/Proposal behind this page)

City of St Pete Beach
Request for Proposal

Civil On Call Construction Services

Timeline	Date	Time
Publication of Bid	03/11/2026	8:00 AM
Pre-Bid Meeting	03/18/2026	10:00 AM
Deadline for Question Submission	03/25/2026	10:00 AM
Submittal Deadline electronically via Bonfire	04/08/2026	9:00 AM
Submittal Opening	04/08/2026	11:00 AM

Submittals are due on or before
04/08/2026 at 9:00 AM EST
Electronically Via Bonfire Only

TABLE OF CONTENTS

I. INVITATION 3
II. STATEMENT OF WORK 4
III. BID FORM 26
IV. GENERAL CONTRACT TERMS 27
V. REFERENCES & MINIMUM QUALIFICATIONS 38
VI. CONTRACTOR'S PROPOSAL SUBMITTAL 39
VII. PUBLIC ENTITY CRIMINAL AFFIDAVIT 40
VIII. NON-COLLUSION AFFADAVIT 42

I. INVITATION

The City of St Pete Beach has issued this Request for Proposal (RFP) to solicit competitive bids and proposals from Proposers for a Task Work Order driven Civil On-Call Construction Services Contract. The successful bidder shall provide all labor, materials, equipment, tools, consumables, transportation, and incidentals to provide Public Services capital improvement projects construction services on an 'as needed' basis for the City of St Pete Beach.

The types of projects that may be assigned under this Contract shall include, but not be limited to:

- intersection/roadway improvements
- drainage upgrades and/or installations
- ADA upgrades and pedestrian/bicyclist improvements
- sidewalk installations and upgrades
- alley improvements
- median modifications
- signing and pavement markings
- recreational trails
- signal upgrades and installations
- intelligent transportation systems (ITS) components upgrades

CONTACT INFORMATION
Procurement Manager – Sara Spain
Email – purchasing@stpetebeach.org

II. STATEMENT OF WORK

PART I: GENERAL REQUIREMENTS

1. SPECIAL CONDITIONS

A. **Local Preference, Location Points and Tie Breakers**

Location preferences do not apply due to the fact that some task orders may be funded with state or federal dollars.

B. **Minority Business Enterprise Policy**

Minority Business Enterprise Evaluation Criteria do not apply due to the fact that some task orders may be funded with state or federal dollars.

C. **Scrutinized Companies**

Scrutinized Companies with activities in Sudan List or activities in the Iran Petroleum Energy Sector List do not apply due to the fact that some task orders may be funded with state or federal dollars.

D. **Bonding and Credit**

Contractor/Vendor shall provide a letter of bondability showing their maximum bonding capacity.

E. **Contract Term**

This will be a three (3) year initial contract with the option to be extended for two (2) additional one (1) year periods upon mutual consent of both parties. It is the intent of the City of St Pete Beach to award these services to more than one Contractor/Vendor.

F. **Contract Pricing**

Contract prices for equipment and/or service will remain firm through the first three (3) contract years. Sixty (60) days prior to the contract renewal date, Contractor/Vendor may request a price adjustment. The price adjustment and justification must be submitted in writing, and be approved by the City. Said price increase may not, under any circumstances, exceed three (3) percent of the Construction CPI. No retroactive contract price adjustments will be allowed. If the Contractor/Vendor fails to submit a price adjustment within the sixty (60) days prior to the contract renewal date, current contract pricing will continue for the contract renewal period.

G. **Work Assignments**

All work to be performed shall take the following into consideration prior to assignment of any work to any Contractor/Vendor, at the discretion of the Procurement Manager:

1. **Estimated Cost < $250,000.00:**

The City retains the right to select any Contractor/Vendor to whom a multiple-award contract has been made when the opportunity to submit a quote for any job whose estimated cost is less than Two Hundred & Fifty Thousand Dollars ($250,000.00).

2. **Estimated Cost > $250,000.00 and < $500,000.00:**

The City shall obtain three (3) quotes from any Contractor/Vendor to whom a multiple vendor award has been made, for those jobs whose estimated cost is greater than Two Hundred & Fifty Thousand Dollars ($250,000.00) and less than Five Hundred Thousand Dollars ($500,000.00).

3. **Estimated Cost > $500,000.00:**
   a. The City retains the right to separately and competitively bid any and all projects whose cost estimates are greater than Five Hundred Thousand Dollars ($500,000.00). The determination will be made by the City Procurement Manager.
   b. Projects that exceed Five Hundred Thousand Dollars ($500,000.00) may not be sub-divided into separate projects in order to circumvent such requirement.

4. **Reassignment of Work:**

The City retains the right and authority to reassign work to another Contractor/Vendor, at any time, for the following reasons:

a. The lowest Contractor/Vendor cannot comply with the specifications in cases of an emergency.
b. The lowest Contractor/Vendor cannot respond to the job requirements, at the time, due to scheduling conflicts, staffing considerations or other reasonable cause(s) for preventing their completion of the task as required.
c. The City shall have the option to solicit additional quotes, bids, or even professional opinion about a particular job when in its best interest and could engage the services of another company/Contractor/Vendor. This exception will always require advanced written notice and explanation by the requesting City Department to the Procurement Manager, for approval, before authorizing any contemplated work to be done. The receipt of the approved purchase order shall be understood that all work is to immediately begin on the project, per the project schedule and needs as identified by the City and as agreed upon by the Contractor/Vendor.

5. **Cumulative Work shall not exceed $4,000,000.00:**

The cost of all work completed by a Contractor/Vendor shall not exceed Four Million Dollars ($4,000,000.00) in a calendar year. If all costs are expected to exceed this threshold, these services will need to be separately re-bid through issuance of a new set of bid specifications.

H. **Quotes**

1. The City will request a quote if and when needed. Vendors participating in the contract shall have ten (10) business days from written notification to respond to quotes, unless waived by the Procurement Manager. If work is an emergency, as determined by the City, vendors shall have (24) hours from email or phone notification to respond to quotes.
2. A Task Order Form will be provided to awarded Contractor/Vendor. A properly executed Purchase Order shall be issued for the work assignment and shall have the Task Order Form and all related paperwork attached as backup. The Purchase Order shall indicate the start and end dates for the project.
3. If the Contractor/Vendor does not wish to issue a quote for or cannot meet the requirements of the project, inclusive of the time given in which to complete the job; the Contractor/Vendor shall complete the Work Order Form by noting "No Quote" on the form itself and by also providing an explanation as to why they are not submitting a quote.
4. Final costs for any individual project shall not exceed the original approved and total cost for such project by more than ten percent (10%). Any and all anticipated project cost increases are subject to advanced approval by the Procurement Manager.
5. Any Contractor/Vendor that fails to submit a quote successively three (3) times in a row may have their contract cancelled due to non-performance.

I. **Notice to Proceed (NTP)**

All task orders $250,000.00 or less will use the purchase order as the Notice to Proceed (NTP). The start date and date or the number of day to complete the project must be included on the purchase order. If the start date is left off the purchase order then the date of the purchase order approval will default as the NTP start date. Projects over $250,000.00 will have a formal NTP issued through the Purchasing Division. All task orders must be reviewed by the Purchasing Division before a purchase order or NTP is issued.

J. **Liquidated Damages**

Liquidated damages will be assessed to the Contractor/Vendor/vendor for each consecutive calendar day completion of the project or work is delayed. The amount of liquidated damages will be dependent on the cost of the task order and will be calculated using the chart below.

Estimated Project Cost Over	Estimated Project Cost But Less than	Daily Charge Per Calendar Day
$0.00	$50,000.00	$960.00
$50,000.00	$250,000.00	$965.00
$250,000.00	$500,000.00	$1,245.00
$500,000.00	$2,500,000.00	$1,665.00
$2,500,000.00	$5,000,000.00	$2,715.00

K. **Project Spreadsheet Submittal**

Contractor/Vendor must submit a formal spreadsheet using the process below.

1. List of completed projects to include:
   a. Relevant project experience includes construction and delivery methods relevant to the type of project to be constructed utilizing the CM/GC method (or performing as a General Contractor/Vendor on similar types and sizes of projects).
   b. Describe no more than ten (10) and no less than five (5) projects in order of most relevant to least relevant (similar type of construction with a contract dollar amount of $500,000.00 or less) which demonstrates the firm's capabilities to perform such projects.
   c. For each project, the following information should be provided:
      i. Project name
      ii. Project location
      iii. Dates during which services were performed
      iv. Physical description (e.g. square footage, key components, site area)
      v. Brief description of Project Services performed by CM/GC or GC Firm.
      vi. Owners Information:
         a. Contact person
         b. Telephone number
         c. Email
         d. Project name
         e. Owner reference
         f. Original Contract Price
      vii. Amount of Change Orders by:
         a. Your Company
         b. Consultant
         c. Client/Entity
      viii. Final Project Price
      ix. Proposer should include a table with this information layout as follows:

Entity Name and Project Name	Contact Person Phone Email	Begin Project Amount	Change Orders by CMR	Change Orders by Engineer	Change Orders by Entity	Final Cost of Projects	Original Days for Construction	Final Construction Days

2. Any outstanding accomplishments of the firm that relates to the specific services being sought.

3. Any Quality Assurance and Value Engineering Programs should also be included.

2. STANDARD SPECIFICATIONS

The Project shall be constructed in accordance with these specifications, the Pinellas County Engineering Standard Details and the Florida Department of Transportation "Standard Specifications for Road and Bridge Construction", Latest Edition.

3. GOVERNING DOCUMENTS

The Specifications and all supplementary documents are essential parts of the Contract, and a requirement occurring in one is as binding as though occurring in all. They are intended to be complimentary and to describe and provide for a complete project. In case of discrepancy, calculated dimensions will govern over scaled dimensions.

The Contractor shall take no advantage of any apparent error or omission in the specifications. If the Contractor discovers such an error or omission, they shall immediately notify the Project Manager. The Project Manager will then make such corrections and interpretations as may be deemed necessary for fulfilling the intent of the specifications.

4. COOPERATION WITH OTHERS

The Contractor shall cooperate with the owners of any underground or overhead utilities in their removal and rearrangement operations in order that these operations may progress in a reasonable manner and that service rendered by these parties will not be interrupted.

A. Permits

1. City ROW Use Permit: The Contractor will obtain a Right of Way Use Permit from the City Permits Division located at 155 Corey Avenue, Florida. There will be no fee for this permit.
2. Public Services will require shop drawings, schedule, and the location of staging areas at the pre-construction meeting. Where the Contractor wishes to use private property, he shall obtain permission from the owner in writing and submit a copy at the first meeting.
3. The Contractor will be responsible for the requirements of all permits. There may be FDOT permits required for this project.

5. LINES, GRADES AND CONSTRUCTION SURVEYING

The Contractor shall lay out the work from the benchmarks, grades, dimensions, points and lines noted on the working drawings, established at the site, or supplied by the Project Manager. All work of every description shall be laid out and checked by the Contractor who will be held solely responsible for its correctness, and the Contractor shall pay for all expenses in connection with this work. The Contractor shall request clarification from the Project Manager of any errors, inconsistencies or omissions which they may discover. It is the Contractor's responsibility to review every street prior to milling and paving, including the inspection of overhead tree limbs, overgrown grass on pavement, manholes and gate valves.

The work may be checked by the Project Manager, and in the event of a discrepancy, their decision shall be final. No special compensation will be made to the Contractor to defray costs of any work or delays occasioned by making surveys and measurements, tests, or inspections, but such costs shall be considered as having been included in the price stipulated for the several items of work to be done under this Contract.

All attempts shall be made to protect existing property corner monumentation. The monumentation must be identified and marked prior to construction to ensure its permanency. All survey monuments, property corners, and benchmarks, which may be disturbed during construction, shall be referenced and replaced by the Contractor. All monuments and benchmarks disturbed or destroyed by the Contractor or any of his forces through accident or negligence shall be replaced by a Florida Licensed Professional Land Surveyor at the Contractor's expense. All survey markings shall be brought to the attention of the Project Manager.

6. MAINTENANCE OF DETOURS

The Contractor shall repair, at his expense, all potholes and other localized failures on streets which are used as detour routes to facilitate construction operations.

7. REPLACEMENT OF TRAFFIC, STREET SIGNS, SIGNAL LOOPS AND MAILBOXES

The Contractor shall remove and re-erect all existing traffic, street signs and mailboxes within the project site at his own expense for those which must be moved or relocated to permit construction operations.

The Contractor shall notify the City prior to disturbing any traffic signal loops and the City will install new traffic signal loops under a separate contract.

8. USE OF PREMISES

The Contractor shall confine all apparatus to the roadway or right-of-way in which the work is being performed and will not unreasonably encumber these premises with such apparatus, materials, supplies, and equipment. The Contractor shall promptly remove and dispose of all debris resulting from his operations.

9. PROSECUTION OF WORK/ LIQUIDATED DAMAGES

The Contractor shall begin work on any project/road no later than fourteen (14) calendar days after receipt of the "Notice to Proceed"; and shall diligently prosecute the same to project completion prior to the expiration of the total number of calendar days determined necessary for the project, from the date of said "Notice to Proceed".
Failure to complete each project within the determined number of calendar days shall cause the Contractor to be subject to the provisions for Liquidated Damages. The Contractor shall pay to the City as fixed liquidated damages for each calendar day of delay until the work is complete or accepted, and the Contractor and their sureties, jointly and severally, shall be liable for the amount thereof:

A. For each Task Work Order issued, the City project manager will determine the required number of days for completion of all work as well as the amount for liquidated damages, as appropriate.

B. Liquidated Damages will be assessed in accordance with Part I, 2. Special Conditions, J. Liquidated Damages of these bid specifications.

** Please refer to City of St Pete Beach Terms and Conditions, “Liquidated Damages, Penalties and Non-Conformance to Contract”

10. CONSTRUCTION SCHEDULE

A. Work shall be performed on an “as needed” basis for a **three (3) year contract period**. Upon mutual consent, this agreement may be extended for **two (2) additional one (1) year periods**, subject to the same terms and conditions and available funding being in place. No guarantee of volume or quantity of work is intended.

B. At the direction of the City of St Pete Beach, the Contractor will not be allowed to proceed with the scheduled work until restoration of preceding work areas are restored to the satisfaction of the City of St Pete Beach. It is the intent of this project to:

1. Start paving each street no later than three (3) working days after milling each street. If the street has not been paved after three (3) working days, a fee equal to the daily amount for liquidated damages indicated in Item #2J (above) will be assessed until the street has been paved. The time limit for streets to be paved where sewer manhole castings or water valve boxes need to be adjusted or replaced will be three (3) working days after the casting or water valve boxes have been adjusted or replaced.

2. Complete restoration including temporary striping and clean-up, shall be finished in no more than five (5) working days after the completion of paving activity and as directed by the City.

3. No work shall be done during the week between the hours of 9:00 PM and 6:00 AM, or between the hours of 9:00 PM and 9:00 AM on weekends or holidays; except for emergency work by a public service utility or by other permit approved by the City.
4. Night work may be established by the Contractor as regular procedure by obtaining the written permission of the City. Such permission may be revoked at any time by the City, if the Contractor fails to maintain adequate equipment and supervision for the proper execution, control, and safety of the work at night.

C. Work may need to be performed under more urgent timeline at the direction of the City of St Pete Beach. The Contract bid form includes pay items for Emergency Mobilizations for such occurrences. The Contactor shall respond to Emergency Work Requests within 24 hours and should expect to mobilize in less than 72 hours.

11. CONTRACTOR'S ACCEPTANCE OF CONDITIONS

The provisions of this Contract shall control any inconsistent provisions contained in the specifications. All Drawings and Specifications have been read and carefully considered by the Contractor, who understands the same, and agrees to their sufficiency for the work to be done.

It is expressly agreed that under no circumstances, conditions or situations shall this Contract be more strongly construed against the City than against the Contractor and his Surety.

Any ambiguity or uncertainty in the Drawings or Specifications shall be interpreted and construed by the Project Manager, or their designee, and their decision shall be final and binding upon all parties.

It is distinctly understood and agreed that the passing, approval and/or acceptance of any part of the work or material by the City, the Project Manager, or by any agent or representative as in compliance with the terms of this Contract and/or of the Drawings and Specifications covering said work, shall not operate as a waiver by the City of strict compliance with the terms of this Contract, and/or the Drawings and Specifications covering said work; and the City may require the Contractor and/or his surety to repair, replace, restore and/or make to
comply strictly and in all things with this Contract and the Drawings and Specifications any and all of said work and/or materials which within a period of one year from and after the date of the passing, approval, and/or acceptance of such work or material, are found to be defective or to fail in any way to comply with this Contract or with the Drawings and Specifications.

This provision shall not apply to materials or equipment normally expected to deteriorate or wear out and become subject to normal repair and replacement before the condition is discovered. The Contractor shall not be required to do normal maintenance work under the guarantee provisions. Failure on the part of the Contractor and/or his surety, immediately after notice to either repair or replace any such defective materials and workmanship, shall entitle the City, if it sees fit, to replace or repair the same and recover the reasonable cost of such replacement and/or repair from the Contractor and/or his surety, who shall in any event be jointly and severally liable to the City for all damage, loss and expense caused to the City by Reason for the Contractor's breach of this Contract and/or his failure to comply strictly and in all things with this Contract and with the Drawings and specifications.

12. HAZARDOUS MATERIALS

The Contractor shall be responsible for the independent inspection and certification of the removal, transportation and disposal of all identified and all unidentified hazardous materials located within the project site.

13. JOB CONDITIONS

A. The Contractor is to provide the City with a working schedule prior to commencing the project. The City reserves the right to revise and/or adjust the schedule accordingly.

B. City Notification**:** At least 72 hours in advance of closing, or partially closing, any street, alley, or other public thoroughfare, the Contractor shall notify the Engineering Division of the Public Services Department, and immediately notify the same agencies of the reopening.

C. Customer Notification**:** The City of St Pete Beach residents occupying a home on the street to be milled and paved shall be notified seven (7) days before the construction of the street begins. This is completed by the following:

1. A door hanger notice will be provided by the Department of Public Services. It shall contain the reason for the construction, the overall length of time with dates, any problems that may be encountered and other important information regarding the project. The Contractor is responsible for the installation of the door hanger notices no later than seven (7) working days before the construction of the street begins.

2. The Contractor shall hand this notice to each resident. If the resident is not available, the Contractor is to place the door hanger on the doorknob. In certain sensitive areas, usually business areas and as requested by the Engineer, each customer may be asked to sign a signature sheet with their name, address, and signature. The original shall be given to the Department of Public Services before any construction commences.

D. Utility Emergency Access**:** All fire hydrants, valves, water meters and backflow assemblies shall be free of all construction material and equipment and in plain view for easy emergency access or necessary maintenance by the City crews.

E. Pedestrian or School Crossings**:** Where the work crosses or interferes with school or pedestrian crossings, extreme care shall be taken by the Contractor to insure the safety of the school children or other pedestrians.

F. Temporary Staging Areas**:** The Contractor shall obtain all temporary construction staging areas approvals required and shall not encroach onto private property unless a written agreement has been made between the property owner and the Contractor; or onto public property unless a written agreement has been made and approval by the Purchasing Division's designee has been received prior to using the land. The Contractor shall assume full responsibility for the protection and safekeeping of materials stored at the staging areas.

G. Erosion Control**:** Prior to construction, all efforts for siltation/erosion control will be taken, including the use of turbidity screens, hay bales, and sod replacement at the earliest possible time prior to and after excavation/grading. Sediment/erosion controls should be used around drainage structures and any areas to mitigate erosion on or off the project site. The Contractor is responsible for any removal of asphalt debris in manholes or drainage structures.

H. Road Hauling**:** The existing paved roads in the City shall be used for transporting material required for construction of the project. The Contractor should be aware that any road that is damaged during construction due to truck/equipment involvement would be the responsibility of the Contractor to correct. The Contractor shall contact the City for specific routes to be used during construction.

I. Water on Street**:** All water shall be removed, and the streets dry prior to paving. No paving shall take place during a rainstorm event.

J. Towing of Vehicles**:** The City will remove any cars parked in the way of the resurfacing project as long as proper notification has been given as stated under Section 13.c. (above) of the Scope of Work.

K. Clippings**:** Where grass, tree roots or other vegetation has grown over or above the edge of the asphalt, it shall be removed to the existing edge of asphalt by the Contractor prior to paving the street.

L. City Utilities**:** If work by the Contractor results in damage to City owned utilities; the Contractor shall repair the damage immediately at no cost to the City. If the Contractor does not respond immediately to repair the damaged utility, the City Utilities Department will make the repair and bill the Contractor for the costs incurred.

M. Dumpsters**:** The City will relocate all dumpsters in the way of this project. The Contractor is to provide written notice to the City forty-eight (48) hours in advance when said dumpsters need to be moved.

N. Disturbed Areas**:** All areas disturbed by the construction shall be restored to a condition at least equal to the pre-construction conditions or to what shall be approved by the Project Manager.

O. Security**:** The Contractor shall be responsible for the site security and shall determine whether full time watchmen will be required. The Contractor shall inspect the area daily and take whatever measures necessary to protect the safety of the public, workmen and materials both day and night.

P. Brick/Driveways**:** The Contractor shall be responsible for the tack coat not being spread to the brick crosswalks, brick intersections, brick speed tables, driveways or other similar areas due to the hauling of the asphalt. These areas shall be covered with sand or other City approved material. If tack appears on these items from the Contract, it shall be the responsibility of the Contractor to remove it.

Q. Interference with Others**:** The Contractor shall coordinate with Pinellas Suncoast Transit Authority or any public agency to notify the agency of any and all potential disruption in service. The Contractor shall not interfere with materials, appliances, or workmen of the City, Private Utility Companies, or any other contractor, who may be performing work at the same sites. All contractors and other parties involved shall have equal rights as far as practicable, to the use of all roads and grounds, except as otherwise provided by these specifications. The decision of the Project Manager shall govern in cases of disagreement between contractors or other parties regarding such use.

R. Public Safety**:** The Contractor shall provide, erect, and maintain continually, seven days per week and twenty-four hours per day, all necessary barricades, reflectorized signs, signals, flashing lights, red lights, "danger" or "caution" or "street closed" signs, etc., and take all necessary precautions necessary for the protection of the work and the safety of the public. The Contractor shall also provide a watchman at all places where the work causes obstructions to normal traffic or constitutes in any way a hazard to the public.

S. Cleaning Up**:** The Contractor shall always keep the construction area clean from accumulation of waste material or rubbish, including storage areas. The Contractor shall remove any rubbish, tools, scaffolding, equipment and materials from and about the premises, which do not belong to the City, prior to completion of the work. The Contractor shall leave the work and premises, following the completion of work, in a clean and workmanlike condition satisfactory to the Project Manager or their representative.

T. Coordination of Details with the County Sheriff**:** Any traffic detour plan must be submitted by the Contractor for approval to the Engineer of Record, the Engineering Division of the Public Services Department and the Pinellas County Sheriff at least two (2) weeks prior to the implementation of said detour in order to provide adequate time for review. Detour plans must include all streets involved in the detour.

U. Maintaining Proper Drainage Flow**:** No drainage structure or paved waterway shall be blocked by the new pavement work. New pavement shall be feathered or tapered towards the inlet opening. This task is to be included as part of the paving operation and there shall be no separate payment for this work. Any debris entering the drainage structure during construction is to be removed by the Contractor.

V. Responsibility of the Contractor**:** The Contractor shall be entirely responsible and liable for all damage or injury as a result of his operations to all other adjacent public and private property, structures of any kind and appurtenances thereto met with during the progress of the work. The cost of protection, replacement in their original locations and conditions or payment of damages for injuries to such adjacent public and private property and structures affected by the work, whether or not shown on the drawings and the removal, relocation and reconstruction of such items called for on the drawings or specified shall be included in the various Contract Items and no separate payments shall be made thereof. Where such public and private property, structures of any kind and appurtenances thereto are not shown on the drawings and when, in the opinion of the Project Manager to avoid interference with the work, payment therefore will be made as provided for extra work in the Agreement. The Contractor is expressly advised that the protection of the buildings, structures, tanks, pipelines, and related work adjacent and in the vicinity of his operations, wherever they may be, is solely his responsibility.

W. Protection of Trees, Lawn & Sod**:** All trees, shrubs and sod shall be adequately protected by and in accordance with all ordinances governing the protection of the trees. No materials shall be placed so as to injure such trees, shrubs and sod. Trees, shrubs and sod destroyed by negligence of the Contractor or his employees shall be replaced by him with new stock of similar size and age, at its proper season and at the sole expense of the Contractor. Trees close to the work shall be protected against injury. The Contractor shall trim all branches and roots in the road that are necessary to complete the project and are liable to damage his operations, but in no case shall any tree be cut or removed without prior notification of the Project Manager. It is the Contractor's responsibility to inspect all roads that are to be milled and resurfaced. All injuries to bark, trunk, limbs, and roots of trees shall be repaired by dressing, cutting, and painting according to approved methods, using only approved tools and materials under the direction of City Staff. Lawn areas shall be left in good condition as before the starting of the work. Where sod has been removed shall be restored with new sod in a good workmanship manner approved by the resident or the Project Manager. The sod shall match existing grass and shall have no visible broad leaf weeds or foreign grasses. Water for the sod shall be supplied by the Contractor in sufficient quantities required to keep the grassed areas moist for a period of one month from the date of installation. The Contractor shall guarantee the satisfactory growth for a 90-day period.

X. Noise**:** The Contractor shall eliminate noise to as great an extent as practicable at all times. Air compressing equipment shall be equipped with silencers and the exhaust of all gasoline motors or other power equipment shall be provided with mufflers. In the vicinity of hospitals and schools, special care shall be used to avoid noise or other nuisances. The Contractor shall strictly observe all local regulations and ordinances covering noise.

Y. Access to Public Services**:** No materials used in the construction of the work shall be placed as to prevent free access to all fire hydrants, valves, manholes, driveways and roadways.

14. SUBSTITUTIONS

Whenever material or equipment are specified or described in the Contract documents by using the name of a proprietary item or the name of a particular supplier the naming of the item is intended to establish the type, function and quality required. Unless the name is followed by words indicating that no substitution is permitted, materials or equipment of other suppliers may be accepted by Project Manager if sufficient information is submitted by Contractor to allow Project Manager to determine that the material or equipment proposed is an approved alternate to that named. The procedure for review by the Project Manager will include the following as supplemented in the General Requirements. Requests for review of substitute items of material and equipment will not be accepted by Project Manager from anyone other than Contractor. If Contractor wishes to furnish or use a substitute item of material or equipment, Contractor shall make written application to Project Manager for acceptance thereof, certifying that the proposed substitute will perform adequately the functions and achieve the results called for by the general design, be similar and an approved alternate to that specified and be suited to the same use as that specified. The application will state that the evaluation and acceptance of the proposed substitute will not prejudice Contractor's achievement of Substantial Completion on time, whether or not acceptance of the substitute for use in the work will require a change in any of the contract documents (or in the provisions of any other direct contract with City for work on the Project) to adapt the design to the proposed work is subject to payment of any license fee or royalty. All variations of the proposed substitute from that specified will be identified in the application and available maintenance, repair and replacement service will be indicated. The application will also contain an itemized estimate of all costs that will result directly or indirectly from acceptance of such substitute, including costs of redesign and claims of other Contractors; affected by the resulting change, all of which shall be considered by Project Manager in evaluating the proposed substitute. The Project Manager may require Contractor to furnish at Contractor's expense additional data about the proposed substitute.

15. MINIMUM QUALIFICATIONS

The City has established minimum qualifications for Contractor expertise and experience regarding the subject project as follows:

A. The Contractor must provide a minimum of three (3) project references and may provide a maximum of five (5) project references for each of the five (5) criteria listed below.

B. Each project reference must have been successfully completed in the ten (10) years preceding the bid opening.

C. All criteria do not need to be satisfied by each submitted project reference, however, all criteria must have been satisfied two (2) times by the submitted project references.

D. Any project for which references are provided may have been self-performed with Contractor’s employees or performed by a subcontractor who is part of the Contractor’s team for this project.

E. The Contractor qualification requirements include the following:

1. Construction of site work including clearing, grubbing, and fine grading.
2. Construction of flexible and rigid pavement roadways, alleys, and trails.
3. Construction of sidewalk and ADA accessibility improvements.
4. Construction of stormwater utility upgrades.

5. Construction of signal, lighting, and intelligent transportation system (ITS) component upgrades.

[END OF PART I]

PART II: PROGRESS MEETINGS

1. **FREQUENCY**

Progress meetings will be held every other week or less, with the first meeting fourteen (14) days after the pre-construction meeting or fourteen (14) days or less after the date of the Notice to Proceed.

The City has the right to hold called meetings as required by the progress of the work.

2. **ATTENDANCE**

The following people should attend progress meetings, as applicable:

- Project Manager
- City Inspector Contractor
- Subcontractors as appropriate to the Agenda Suppliers as appropriate to the Agenda Others as appropriate

3. **PROGRESS SCHEDULE**

The Contractor shall submit a detailed schedule before work is to be started. It shall indicate the sequence of the work, the time of starting and completing each part.

4. **SUGGESTED AGENDA**

- Review approval of minutes of previous meetings. Review of work progress.

Field observations, problems, and conflicts. Problems which impede the construction schedule. Review of off-site fabrication, delivery schedules.

- Corrective measures and procedures to regain projected schedule, if necessary. Revisions to construction schedule.
- Progress schedule during succeeding work period. Coordination of schedules.
- Review submittal -- expedite as required. Maintenance of quality standards.
- Pending changes and substitutions. Shop drawing submittals.
- Review proposed changes for:
  Effect on construction schedule and on completion date. Effect on other contracts of the project.
  Other business

[END OF PART II]

***P*ART III: TECHNICAL SPECIFICATIONS**

1. GENERAL

Furnish all necessary labor, equipment, and materials to construct various types of public services infrastructure projects as outlined in Part I General Requirements, 1. Introduction.

Tasks may involve milling existing asphaltic concrete surfaces to specified depths. Excess milled material should be transported to an asphalt reprocessing plant. The streets specified should be surfaced with Superpave asphaltic concrete mix. Additionally, tasks include necessary adjustments or replacements of existing structures, traffic control, sweeping, cleanup, placement of painted and thermoplastic pavement markings, and installation of curb, gutter, and sidewalks.

2. MOBILIZATION

A. The Contractor is solely responsible for providing security for all materials stored on- site during the construction activities.
B. The Contractor shall provide ten (10) calendar days notification to the Engineer prior to initiating mobilization to the site and initiating work. The Contractor will also provide copies of all permits that have been obtained to the engineer prior to initiating work associated with such permits.
C. The Contractor shall restrict their operations to the designated work area and ensure that construction activities do not disrupt normal operational activities of the City's services.

D. The Contractor is responsible for visually inspecting the site to note obstructions or access difficulties.

E. The Contractor is responsible for providing and/or maintaining access to the work site to facilitate all construction, inspection and testing activities.

F. The contractor shall deliver/post notifications to affected citizens and business owners seven (7) calendar days prior to construction. A form of the notification must be approved by the City prior to distribution.

3. MILLING

A. Furnish all necessary labor, equipment and materials to mill pavements as specified, and haul the milled material to the reprocessing plant.

B. The methods used for milling shall meet all applicable portions of Section 327 - Milling of Existing Asphalt Pavement, Florida Department of Transportation Standard Specifications for Road and Bridge Construction, latest revision.
C. All manhole castings and water valve boxes shall be adjusted and/or replaced by the Contractor, as specified, after milling is completed.

D. When the full street is required by these documents to be milled, the desired finished cross slope is to be 2%.

E. The unit price per square yard (SY) shall be full compensation for all work required to perform the milling, loading, hauling, sweeping, clean-up, and all incidentals necessary to complete the work specified in this section.

F. Milling of existing asphalt speed humps and speed tables is required as specified in the plans.

4. CONCRETE CURB AND GUTTER (INSTALLATION)

A. All Concrete Curb and Gutter work shall conform to the requirements of Section 520, "Concrete Gutter, Curb elements and Traffic Separator," of the FDOT Standard Specifications and placed in conformity with the lines, grades, dimensions and notes shown in the contract plans.

B. Forms for this work shall be made of either wood or metal and shall have a depth at least equal to the Plan vertical dimensions for the depth of the concrete being deposited against them. They shall be straight and free from warp or bends and of sufficient strength and rigidity, when staked, to resist the pressure of the concrete without deviation from line and grade. If wooden forms are used, they shall be of a cross-section approved by the Project Manager and shall have a flat surface on top. The Contractor shall use flexible forms for all curb and gutter constructed on a radius.

C. Excavation shall be to the required depth, and the foundation material upon which these items are to be placed shall be compacted as specified in Section 120-9, "Compaction Requirements" of the FDOT Standard Specifications.

D. The concrete shall be placed in the forms and tamped and spaded in place so that all honeycombs will be eliminated, and sufficient mortar brought to the surface. The top of the section shall be floated smooth, and its edges rounded to the radius shown on the plans. No concrete shall be placed during unfavorable weather conditions.

E. Except for machine placed concrete, at the option of the Contractor, joints may be formed by the use of dummy joints (either formed or sawed) or by the use of sheet metal templates. If sheet metal templates are used, they shall be at least as long as the depth of the curb section. They shall be set perpendicular to the top and face of the curb form and shall be held firmly in place during the placing of concrete. Templates shall remain in place until the concrete has set sufficiently to hold its shape, but shall be removed while the forms are still in place.

For machine placed concrete, unless an alternate method is approved by the Project Manager, contraction joints shall be sawed. The joints shall be sawed as soon as the concrete has hardened to the degree that excessive raveling will not occur and before uncontrolled shrinkage cracking begins.

Contraction joints shall be spaced at intervals of ten feet (10') except where a lesser interval is required for closure, but no section shall be less than four feet (4') in length. On medians and traffic separators, cuts shall align across from each other. Cuts shall also align with contraction joints of sidewalks adjacent to the curb.

Expansion joints shall be constructed at all structures, at all ends of curb returns, except that expansion joints shall not be constructed within twenty (20) feet of an island nose. They shall be located at intervals of 500 feet between other expansion joints or ends of a run. The expansion joint filler shall be ½ inch in width and shaped to the cross section of the curb.

F. The forms shall be removed within twenty-four (24) hours after the concrete has been placed, and minor defects then filled with mortar composed of one part of Portland cement and two parts of fine aggregate. Plastering will not be permitted on the face of the curb or the gutter. Any rejected curb and gutter shall be removed and replaced at no additional cost to the City. All exposed surfaces shall be given a brush finish while the concrete is still green. For any surface areas, however, which are too rough or where other surface defects make additional finishing necessary, the Project Manager may require that the curb be rubbed to a smooth

surface with a soft brick or wood block, with water used liberally. Also, if necessary further to provide a suitable surface, the Project Manager may require additional rubbing, using a thin grout or mortar, either of which additional rubbing shall be at no additional cost to the City.

G. When surface finishing is completed, the curb and gutter shall be cured per applicable paragraphs of Section 520-8, of the FDOT Standard Specifications.

H. After the concrete has set sufficiently, but not later than three (3) days after pouring, the spaces in front and back of the curb and gutter sections shall be refilled to the required elevation, with suitable material, adequately compacted. In sections where sidewalk is to abut the curb, the backfill shall be placed and compacted to a suitable depth for the placing of sidewalk forms. In all other sections of the work, the back of the curb shall be backfilled to the required elevation with suitable material, which shall be placed and thoroughly compacted in layers of not more than six inches (6") in thickness.

I. Where a base is to be constructed adjacent to a curb and gutter, the curb and gutter shall be properly backfilled and shall set for a period of not less than seven (7) days before any base material is placed against it.

J. The top and face of the finished curb and gutter shall be true and straight, and the top surface of curbs shall be uniform width, free from humps, sags, or other irregularities. When a straightedge ten feet (10') long is laid on the top or face of the curb or on the surface of gutters, the surface shall not vary more than 0.01 foot from the edge of the straightedge, except at grade changes or curves.

K. Full compensation for conforming to the requirements of this Section shall be considered as included in the unit price paid per linear foot (LF) for constructing concrete curb, curb and gutter, or valley gutter, complete in place and accepted, and no additional compensation will be allowed therefore.

5. CONCRETE SIDEWALKS (INSTALLATION)

A. All Concrete Sidewalk work shall conform to the requirements of Section 522, "Concrete Sidewalks and Driveways", of the FDOT Standard Specifications and these Special Provisions and placed in conformity where so ordered by the Project Manager.

B. Forms for this work shall be made of either wood or metal and shall have a depth at least equal to the Plan vertical dimensions for the depth of concrete being deposited against them. They shall be straight, free from warp or bends, and of sufficient strength and rigidity, when staked, to resist the pressure of the concrete without deviation from line and grade. If wooden forms are used, they shall be of cross-section approved by the Project Engineer and shall have a flat surface on top. The Contractor shall use flexible forms for all headers constructed on a radius.

C. Tree roots within the sidewalk area shall be removed to a minimum depth of one foot (1') below the specified subgrade surface. If a contractor must cut tree roots, sharp cuts shall be made. All roots greater than 2” shall be cut clean with a hand saw. The contractor shall hand dig near the roots and saw the roots, heavy mechanical equipment shall not be used. Broken roots shall be sawed 2” behind the ragged end. Roots smaller than 2” may be cut with a sharp-edged hand tool. Crushed or torn roots are more likely to allow decay. Sharply cut roots produce a flush of new roots helping the tree to recover from its injury. If tree roots larger than 6” must be cut, the Contractor shall inform the City Engineer or his representative prior to cutting for field direction. All boulders, organic material, soft clay, spongy material and any

other objectionable material shall be removed and replaced with material approved by the Engineer.

Before placing the forms for sidewalks, the surface upon which they are to be built shall be brought to the specified line, grade and elevation and uniformly compacted to a minimum 85 percent of AASHTO T-99 density. The materials shall be compacted at a moisture content such that the specified density can be uniformly attained. If necessary to attain the specified density, water shall be added to the material, or the moisture content shall be lowered by manipulation or allowing the material to dry, as is appropriate.

Fill areas including cut areas under the sidewalk which have been excavated more than six inches (6") below the bottom of sidewalk shall be compacted to a minimum of 95 percent of AASHTO T-99 density. The area to be compacted is defined as that area directly under the sidewalk and one foot (1') beyond each side of the sidewalk when right-of-way allows.

D. Transverse expansion joints shall be placed at intervals not exceeding eighty feet (80'), and at all places where a walk intersects or abuts a curb, driveway, building, other sidewalk or fixed objects. Expansion joints shall be constructed at each side of structures and at ends of curb returns, except that expansion joints shall not be constructed within twenty feet (20') of an island nose. Expansion joints shall be filled with ½ inch thick premolded joint filler conforming to the provisions in Section 932 of the Standard Specifications. The joint filler shall be shaped to the cross section of the sidewalk, shall extend from the surface to the subgrade, and shall be at right angles to the sidewalk surface.

   Contraction joints shall be sawed and shall be at intervals of four (4) to six (6) feet, or as shown on the plans. A slot approximately 3/16 inches wide and not less than 1 ½ inches deep shall be cut with a concrete saw after the concrete has set, and within twenty-four (24) hours of concrete being poured. Open type joints shall not be allowed.

E. Just prior to placing the concrete, the subgrade shall be moistened. The concrete shall be placed in the forms and tamped and spaded in place so that all honeycombs will be eliminated and sufficient mortar brought to the surface. Thereafter, the surface shall be brought to a smooth even finish by means of a wooden float. No concrete shall be poured during unfavorable weather conditions.

F. The concrete shall be given a broom finish. The top of the finished sidewalk shall be true and straight, and the top surface of sidewalks shall be uniform width, free from humps, sags, or other irregularities. When a straightedge ten feet (10') long is laid on the top of the sidewalk the surface shall not vary more than 0.01 foot from the edge of the straightedge, except at grade changes or curves.

G. When surface finishing is completed, the sidewalk shall be cured per applicable paragraphs of Section 520-8, of the Standard Specifications. After concrete has set sufficiently, but no later than three (3) calendar days after pouring, the space alongside the sidewalk shall be backfilled, compacted and sodded or seeded as shown on the striping plans.

H. Full compensation for conforming to the requirements of this Section shall be considered as included in the unit price paid per Square Yard for constructing sidewalks, complete in place and accepted, and no additional compensation will be allowed therefore.

6. LEVELING/RESURFACING

A. **Material:**

1. The material used for leveling shall be Superpave asphaltic concrete.

2. The material used for resurfacing shall be Superpave asphaltic concrete. Friction Course mixes may be used as specified by the City Project Manager.

B. **Construction Requirements:**

1. The leveling and resurfacing shall commence within three (3) working days after the milling of each street. The time limit for streets where castings or other water valve boxes need to be adjusted or replaced will be three (3) working days after the casting or water valve box has been adjusted or replaced.

2. The methods used for re-paving shall meet all applicable portions of Section 330 - Hot Mix Asphalt General Construction Requirements, Florida Department of Transportation Standard Specifications for Road and Bridge Construction, latest revision.
3. The Contractor shall contact all utility and TV cable companies for location of their facilities. The exact location of their facilities, type of material used by the utility and TV cable, etc. shall be determined by the Contractor prior to any excavation work required by this Contract.

4. The Contractor shall be responsible for the protection of all pavements, sidewalks, and other improvements within the work area. All damage to such improvements, as a result of the Contractor's operations, beyond the limits of the work of pavement replacement as described herein, shall be repaired by the Contractor at the Contractor's expense.

5. Testing by City: Testing may be completed by an independent testing laboratory. If core borings are done to determine thickness and density, the Contractor is responsible for filling these holes in the pavement.

C. **Quality Control:**

1. The Contractor shall have a Quality Control Technician who has been certified by the State of Florida Department of Transportation as a Certified Asphalt Plant Technician, available at the asphalt plant at all times the Contractor is producing asphalt mix for use on this project.

2. The Contractor's quality control procedures, inspection and tests shall be documented, and that information shall be available for review by the Project Manager or his representative, throughout the course of the Contract.

3. The mix design shall meet the requirements of Section 334-3.2 for the type of Superpave asphalt indicated in the plans as set forth in Florida Department of Transportation Standard Specifications for Road and Bridge Construction, latest revision. Friction course asphalt concrete must meet the requirements of Section 337 for the type of friction course indicated in the plans. Submit a Notarized Certification of Specification Compliance letter on company letterhead to the Engineer stating that all material produced and placed on the project was in substantial compliance with the specifications. The City may run independent tests during the project to determine the acceptability of the material.

7. UTILITY ADJUSTMENTS & REPLACEMENTS

A. **Adjusting Existing City Valve Boxes:**

1. The Contractor is to provide the necessary equipment to adjust the castings without damaging the existing structure. Adjustment would include being able to screw the top portion of the valve box up or down. Water valves that cannot be adjusted either up or down must be replaced under Section 6.2. If the structure is damaged, the Contractor is to replace the structure to its original condition at their cost.

2. The materials and construction methods for this work shall conform to applicable portions of Section 425 Inlets, Manholes and Junction Boxes, Florida Department of Transportation Standard Specifications for Road and Bridge Construction, latest revision.

3. The quantities to be paid for under this section shall be for the number of valve boxes, adjusted physically.

4. Structures, sections of structures, valve box sections or other items necessary for adjustment that are considered debris and that has been removed by the Contractor as part of the progress of work shall be removed from the project site by the Contractor at the end of each day's work. The Contractor is to remove all debris deposited in the structure as a result of the work performed.

B. **Castings:**

1. The Contractor shall notify the Project Manager or his representative on any questions regarding the prior adjustment or replacement of manhole frames or valve boxes.

2. Manhole frame and covers and valve boxes to be replaced are to be furnished by the Contractor.

3. Castings damaged by construction shall be replaced at no additional cost to the City of St Pete Beach.
4. All castings shall be adjusted and replaced in accordance with the manufacturers recommended requirements.

5. Adjusted or replaced castings shall be set at the grade of the proposed asphalt after compaction with not more than ¼" variation in 10 feet.

8. STRIPING AND MARKINGS

A. **Temporary Striping**: Temporary traffic stripes and markings will be required. Temporary markings shall be placed immediately after milling on any arterial/collector roads or within the immediate proximity of a school, and immediately after final asphalt on all roads. Before opening any re-paved area to traffic, temporary markings shall be applied as specified by the Project Manager. The paint used for this work shall be in accordance with the FDOT specification.

B. **Permanent Striping**: The Contractor shall place permanent traffic stripes and markings in accordance with reference points and alignment gathered by the Contractor prior to milling or overlay or in accordance with striping plans provided by the City of St Pete Beach. The Contractor shall use an Alkyd/Maleic thermoplastic compound and application methods meeting the requirements of Section 711 – Thermoplastic Pavement Markings, Florida Department of Transportation Standard Specifications for Road and Bridge Construction, latest revision. The thermoplastic compound shall be extruded on the pavement surface in a molten state by mechanical means with surface application of glass spheres, and upon cooling

to ambient pavement temperature shall produce an adherent pavement marking of the specified thickness and width and capable of resisting deformation.

C. A minimum of 21 days curing time after asphalt placement shall be allowed before the placement of any thermoplastic marking commences, with all thermoplastic markings to be completed within 28 days after asphalt placement.

D. The color of the thermoplastic shall be white, yellow, or blue as specified by the M.U.T.C.D.; and revisions thereof.

9. CLEANUP AND DUST CONTROL

A. The Contractor shall furnish and operate a minimum of one (1) mechanical sweeper for the purpose of removal of loose milled material. After milling and before resurfacing, the Contractor shall water the streets as necessary to prevent dust nuisance from his operations or from traffic.

B. Upon completion of the work on each street and before acceptance, the Contractor shall remove all surplus and discard materials and rubbish; shall restore in an acceptable manner all property, both public and private, which has been damaged during the prosecution of the work and shall leave each street in a neat and presentable condition throughout the entire length of the work under Contract. This shall include, but not be limited to the overspray of tack, and shall be completed within one (1) week after the resurfacing of each street.

C. Failure of the Contractor to comply with the Project Manager cleanup orders may result in an order to suspend work until the condition is corrected. No additional compensation will be allowed as a result of such suspension.

D. 5% of the value of the work performed may be retained, should at the opinion of the City, restoration not be completed.

E. The cost of all work regarding Cleanup and Dust Control shall be included in the prices for other pay items, which are included in the Contract.

F. The Contractor shall reflect in the schedule, which shall be approved prior to construction, the time required for complete restoration. The Contractor shall strictly adhere to the schedule.

G. The Contractor shall take the necessary measures to prevent siltation and other construction related materials including tack coatings from entering storm inlet structures and manhole structures during the road repaving operation.

10. TRAFFIC CONTROL, STREET CLOSURES, DETOURS AND BARRICADES

A. The Contractor shall comply with all applicable portions of Section 102 – Maintenance of Traffic – Florida Department of Transportation Standard Specifications for Road and Bridge Construction, latest revision, and City requirements for traffic control.

B. The Contractor shall furnish all necessary barriers, lights, signs, and flag persons, to advise the public of detours and construction hazards. All flag persons on site shall be properly qualified.

C. The Contractor shall be responsible for compliance with additional public safety requirements, which may be ordered by the Project Manager or his authorized representative.

D. Failure of the Contractor to comply with the public safety requirements may result in an order to suspend work until the condition is corrected. No additional compensation will be allowed as a result of such suspension.

E. The Contractor shall furnish and install, and upon completion of the work, promptly remove all signs and warning devices.

11. SODDING

A. **Description:** All sodding shall conform to the requirements of Section 570, FDOT Manual on Road and Bridge Construction, latest revision.

B. **Materials:**

1. **Sod:** Sod shall be Argentine Bahia as determined by the Project Engineer. Where sodding will adjoin, or be in sufficiently close proximity to, private lawns, other types of sod may be used if desired by the affected property owners and approved by the Project Engineer. The sod shall be taken up in commercial-size rectangles, preferably 12-inch by 24-inch or larger. Maximum allowable deviation from the standard widths and lengths shall be five percent (5%). Broken pads and torn or uneven ends will not be acceptable. The sod shall be sufficiently thick to secure a dense stand of live grass. The sod shall be live, fresh and uninjured, at the time of planting. It shall have a uniform soil thickness of three-fourths inch (3/4"), plus or minus one-fourth inch (1/4"), at the time of cutting. Measurement for thickness shall exclude top growth and thatch. The soil mat shall adhere firmly to the roots such that it will not break, crumble, or tear during handling and placing. No muck or heavy peat soil grown sod will be accepted. All sod shall be 97% free of weeds and other grasses. All sod shall comply with State and Federal laws with respect to inspection for plant diseases and insect infestation. An inspection certificate, required by law, may be requested by the Project Engineer for each shipment. All sod shall be placed as soon as possible after being dug and shall be shaded and kept moist from the time it is dug until it is planted. No sod which has been cut for more than 48 hours may be used unless specifically authorized by the Project Engineer.

2. **Commercial Fertilizer:** All commercial fertilizers shall comply with the State fertilizer laws. All fertilizers shall be uniform in composition, free flowing and suitable for application by mechanical spreader equipment. The chemical designation of the fertilizer shall be 12-8-8 or equivalent ratio. At least 50% of the phosphoric acid shall be from normal super phosphate or an equivalent source which will provide a minimum of two units of sulfur. The amount of sulfur shall be indicated on the quantitative analysis card attached to each bag or other container.

3. **Water:** The water may be obtained from any approved spring, pond, lake, stream or municipal water system. The water shall be free of excessive and harmful chemicals, acids, alkalies, or any substance which might be harmful to plant growth or obnoxious to traffic. Salt water shall not be used. The Contractor shall pay for all water used for the installation of sod.

C. **Construction Methods:**

1. **Soil Moisture:** Rough and fine grading shall be carefully executed to ensure that the final placed sod will conform to existing grades, free of depressions, “bird baths” or

bumps. The area on which sod is to be placed shall contain sufficient moisture for optimum results. During periods of high temperature and after all unevenness in the soil surface has been corrected, the soil shall be lightly irrigated immediately prior to laying the sod. Muddy soil shall not be created.

2. **Placing Sod:** The first row of sod shall be laid in a straight line with subsequent rows placed parallel to and tightly against each other. Lateral joints shall be staggered to promote more uniform growth and strength. Care shall be exercised to ensure that the sod is not stretched or overlapped and that all joints are butted tight in order to prevent voids which would cause air drying of the roots. The sod shall form a solid mass. The sod shall be firmly embedded by light tampering and rolling to ensure contact with the subgrade and to provide a smooth, even surface to eliminate voids under the root system making dry spots. The sod shall be staked on all slopes of 2:1 or steeper with pegs or similar material, driven through the sod blocks, six inches (6") into firm earth at suitable intervals.

3. **Watering:** The sod shall be watered with a fine spray immediately after placing, such that the underside of the new sod pad and soil immediately below the sod are thoroughly wet. The sod shall be kept in moist condition for the duration of the contract period (and in no case less than 4 weeks except in dry season it shall be 8 weeks). The moistened condition shall extend to at least to the full depth of the rooting zone. Water shall not be applied between the hours of 10:00 a.m. and 6:00 p.m.

D. **Maintenance:** The Contractor shall, at no additional expense to the City, maintain the sodded areas in a satisfactory condition until final acceptance of the project. Such maintenance shall include the filling, leveling, and repairing of any washed or eroded areas, as deemed necessary by the Project Engineer. The Project Engineer, at any time, may require resodding of any areas in which the establishment of the grass stand does not appear to be developing satisfactorily. The Contractor shall mow lawns as soon as there is enough top growth to cut with mower set at height of two inches (2") and shall repeat mowing as required throughout the duration of the project, to maintain such height. The Contractor shall not delay mowing until grass blades bend over and become matted and shall not mow when grass is wet.

E. **Measurement and Payment:** Full compensation for conforming to the requirements of this Section shall be considered as included in the unit price paid per square yard (SY) for furnishing, placing, maintaining and replacing sod, complete in place and accepted, and no additional compensation will be allowed therefore.

[END OF PART III]

SECTION 01425
FDOT STANDARDS REFERENCE

PART 1 GENERAL

1.01 Section Includes

Instruction on the use and applicability of FDOT standards on the project

1.02 Requirements

A. The Florida Department of Transportation, Standard Specifications for Road and Bridge Construction, latest non-metric edition ("Standard Specifications"), and Standard Plans for Road Construction, latest non-metric edition ("Standard Plans") are referenced herein as source documents for applicable technical specifications and construction details to be used in the construction of this project. The term “latest edition” refers to the latest edition implemented by FDOT and includes all FDOT implemented supplements at the time of bid advertisement.

B. Method of Measurement and Basis of Payment is to be in accordance with the Florida Department of Transportation Standard Specifications. Any item which is detailed in the Plans and for which material types, sizes and quality are also called out, the "Standard Plans" shall take preference over the plan detail unless otherwise directed by the Engineer.

C. Where the FDOT Standard Specifications use the reference "Department", replace "Department" with "Owner", except for when such reference is to Department Standards and evaluation criteria.

D. The Standard Plans are referenced herein as a source document for applicable construction items and details called for in the plans for which a specific plan detail is not provided. The Contractor shall construct the items called for in the plans in accordance with the "Standard Plans" unless otherwise defined or detailed in the plans or as directed by the Owner, Engineer or authorized representative.

E. The Standard Plans are available for download from the FDOT website at: https://www.fdot.gov/design/standardplans

F. In case of conflict, the Technical Specifications takes precedence over FDOT specifications for a particular construction requirement.

G. Copies of the latest implemented edition and implemented supplements of the Florida Department of Transportation Standard Specifications are available for download from the FDOT website at: https://www.fdot.gov/programmanagement/Implemented/SpecBooks

H. The Contractor shall inform the Owner and Engineer in writing of any specification that the Contractor feels is ambiguous or conflicting with other plan notes and details prior to the construction of the associated item. The Engineer will determine which information is to be used for construction. The Contractor is responsible for the removal and replacement of any item improperly constructed resulting from a misinterpretation of the specifications at no additional cost to the Owner.

PART 2 PRODUCTS - Not Used

PART 3 EXECUTION

3.01 General

The Contractor shall use Divisions Two (II) and Three (III) of the FDOT Specifications as they relate to methods of construction and material types and quality for the appropriate construction items contained within this project.

END OF SECTION

III. BID FORM

See attached Excel document.

IV. GENERAL CONTRACT TERMS

REQUEST FOR PROPOSALS
Civil On Call Construction Services

REQUEST FOR PROPOSAL SUMMARY
The City of St Pete Beach has issued this Request for Proposal (RFP) to solicit competitive bids and proposals from Proposers for a Task Work Order driven Civil On-Call Construction Services Contract. The successful bidder shall provide all labor, materials, equipment, tools, consumables, transportation, and incidentals to provide Public Services capital improvement projects construction services on an 'as needed' basis for the City of St Pete Beach.

The "City" intends to **award multiple contracts** to vendors who can provide the best value for services. Vendors may submit proposals for all, some, or only one of the requested line items or categories. **It is not mandatory to submit a proposal for every item listed**. A bidder may bid on any, all, or none of the items. The "City" reserves the right to select multiple vendors to optimize cost-efficiency and capability across different segments of the project. Proposals will be evaluated based on capability, cost, and capacity to perform the specific line items requested.

PROPOSAL SUBMITTALS
Proposal documents must include a signed/notarized Contractor's Proposal Submittal, Bid Form, References, Contractor's license and insurance certificates, and Public Entity Criminal Affidavit. The Contractor shall submit electronic proposals only. Bidders must submit electronically only through Bonfire platform. When bidding electronically, only one copy should be submitted.

Proposals shall include the following:

- A signed and notarized Proposer's Contract Proposal.
- Current proof of insurance certificate.
- A list of references and minimum qualifications as outlined in Section V.
- One copy of bid electronically submitted to Bonfire platform.

The City is not responsible for any Addendums or other supplementary information that is not received due to non-submittal of the aforementioned information. Please refer back to the city website (http://www.stpetebeach.org/news-and-links/city-projects.html) for additional project information as it becomes available. The City reserves the right to decide whether to answer addendums or not. The City is not required to provide any additional information.

Proposers or persons wishing to submit a proposal on this project shall be licensed, and insured in accordance with the City's requirements

The City of St. Pete Beach reserves the right to reject any or all proposals or parts of proposals, or accept any proposal or part thereof deemed to be in the best interests to the City of St. Pete Beach.

Electronic proposals must be submitted by **9:00 AM on April 08, 2026 (Deadline),** clearly marked as: **"Civil On Call Construction Services."**

PRE-PROPOSAL MEETING
An optional pre-proposal meeting will be held on **March 18, 2026 at 10:00 AM EST** via Microsoft Teams conference/Teleconference. Please contact the City's Procurement Manager (purchasing@stpetebeach.org) for a meeting invitation and instructions.

WRITTEN REQUESTS FOR INTERPRETATIONS/CLARIFICATIONS
No oral interpretations will be made to any firms as to the meaning of the scope of work or any other

contract documents included in this **RFP.** All questions pertaining to the terms and conditions or scope of work of this Request for Proposal **(RFP)** must be sent in writing via email only to the City Procurement Manager (purchasing@stpetebeach.org) and shall be received no later than **10:00 AM EST on March 25, 2026.** Responses to questions may be handled as an Addendum if the response would provide clarification to the requirements of the **RFP**. All such Addenda shall become a part of the contract documents. The City will not be responsible for any other explanation or interpretation of the proposed **RFP** made or given prior to the award of the contract. The City will not respond to questions received after the specified deadline. The City reserves the right to respond to any and all questions but is not required to do so. If the Proposer discovered the opportunity through the online platform (Bonfire), do not submit questions through these platforms. **Only questions emailed directly to the City Procurement Manager will be answered.**

BEGINNING DATE
The Proposer shall, within ten (10) business days after receipt of the Notice of Award and before commencement of any operations hereunder, execute the Agreement. Additionally, the Proposer shall, within twenty (20) business days after receipt of the Notice of Award, provide all required documentation to the City.

COMPLETION OF WORK
The work will be completed on an as-needed basis. Each location that needs to be surveyed, repaired and/or worked on will constitute it's own "job". This will be a three (3) year initial contract with the option to be extended for two (2) additional one (1) year periods upon mutual consent of both parties. It is the intent of the City of St Pete Beach to award these services to more than one Contractor/Vendor.

COSTS INCURRED BY PROPOSERS
All expenses involved with the preparation and submission of proposals to the City, or any work performed in connection therewith, shall be borne solely by the Proposers. No payment will be made for any responses received or for any other effort required of or made by; the Proposer's prior to contract commencement.

ORAL PRESENTATION
The City may require an oral presentation of the proposal at the Evaluation Committee's discretion. This could also include a formal interview of any and all members of the Proposer's contract management staff.

CONFLICT OF INTEREST
The Proposer represents that it presently has no interest and shall acquire no interest, either direct or indirect, which would conflict in any manner with the performance or services required hereunder, as provided for in FL Stat. 112.311. The Proposer further represents that no person having any interest shall be employed for said performance.

The Proposer shall promptly notify the City's representative, in writing, by certified mail, of all potential conflicts of interest for any prospective business association, interest, or other circumstance, which may influence or appear to influence the contractor's judgment or quality of services being provided hereunder. Such written notification shall identify the prospective business association, interest or circumstance, the nature of work that the Proposer may undertake and request an opinion of the city as to whether the association, interest or circumstance would, in the opinion of the City, constitute a conflict of interest if entered into by the Proposer. The City agrees to notify the Proposer of its opinion by certified mail within thirty days of receipt of notification by the Proposer.

LATE PROPOSAL OR MODIFICATIONS
Modifications in writing received prior to the time set for the proposal submittal will be accepted. Proposal modifications received after the time set for the proposal submittal will not be considered.

RELATED PARTIES AND MULTIPLE PROPOSALS

Where two (2) or more related parties each submit a proposal or multiple proposals are received from (1) Proposer, for any such contract, such proposals shall be judged non-responsive. Related parties mean Proposers or the principles thereof, which have a direct or indirect ownership interest in another Proposer for the same contract or in which a parent company or the principles thereof where one (1) Proposer has a direct ownership interest in another Proposer for the same contract.

RIGHT TO AUDIT
The City of St. Pete Beach reserves the privilege of auditing a Proposer's record as such records relate to purchases or work between the City and said Proposer. Records should be maintained for three years from contract date.

VARIANCE FROM STANDARD TERMS & CONDITIONS
All standard terms and conditions stated throughout the RFP apply to this contract except as specifically stated. This should be fully understood by Proposers prior to submitting a proposal.

ASSIGNMENT
The Proposer shall perform this contract. No assignment or subcontracting shall be allowed without prior written consent of the City. If a Proposer intends to subcontract a portion of this work, the Proposer must disclose that intent in the proposal. In the event of a corporate acquisition and/or merger, the Contractor shall provide written notice to the City within thirty (30) business days of Proposer's notice of such action or upon the occurrence of said action, whichever occurs first. The right to terminate this contract, which shall not be unreasonably exercised by the City shall include but not be limited to, instances in which a corporate acquisition and/or merger represent a conflict of interest or are contrary to any local, state, or federal laws. Action by the City awarding a proposal to a firm that has disclosed its intent to assign or subcontract in its response to the RFP, without exception shall constitute approval for purpose of this Agreement.

LOBBYING Lobbying of Evaluation Committee members, City employees, or elected officials regarding request for proposals, request for qualifications, bids or contracts, during the pendency of bid award or bid protest, by the bidder/proposer/protestor or any member of the bidder's/proposer's/protestor's staff, an agent of the bidder/proposer/protestor, or any person employed by any legal entity affiliated with representing an organization that is responding to the request for proposal, request for qualification, bid or contract, or has a pending bid protest is strictly prohibited either upon advertisement or on a date established by the City and shall be prohibited until either an award is final or the protest is finally resolved by the City Manager or Procurement Manager; provided, however, nothing herein shall prohibit a prospective bidder/proposer from contacting City departments to address situations such as clarification and/or questions related to the procurement process. For purposes of this provision, lobbying activities shall include but not be limited to, influencing or attempting to influence action or non-action in connection with any requests for proposal, request for qualification, bid or contract through direct or indirect oral or written communication or an attempt to obtain goodwill of persons and/or entities specified in this provision. Such actions may cause any request for proposal, request for qualification, bid or contract to be rejected.

ADDITIONAL REQUIREMENTS
The City reserves the right, by change order, to unilaterally add or delete locations/services, either collectively or individually, at the City's sole option, at any time after award has been made as may be deemed necessary or in the best interest of the City. In such case, the Proposer will be required to provide or reduce services to this contract in accordance with the terms, conditions, and specifications.

SERVICES AGREEMENT
A written agreement incorporating the RFP and the successful proposal will be prepared by the City, signed by the successful Proposer, and presented to the City Commission for approval and signature.

INTEGRITY OF REQUEST FOR PROPOSAL DOCUMENTS
Proposers shall use the original RFP forms provided within the RFP and enter information in the spaces where a response is requested. Proposers may use an attachment as an addendum to the RFP forms if sufficient space is not available on the original form for the Proposer to enter a complete response. Any modifications or alterations to the original RFP documents by the Proposer, whether intentional or otherwise, will constitute grounds for rejection of the RFP. Any such modifications or alterations a Proposer wishes to propose must clearly be stated in the Proposer's RFP response and presented in the form of an addendum to the original RFP documents.

RESPONSIBILITY OF THE CITY MANAGER OR DESIGNEE
The term "City Manager or designee" wherever used in this Contract shall be the City of St. Pete Beach or its duly authorized representative. Notices of any change in the City Manager or designee shall be given in writing by the City to the Contractor. The City Manager or designee shall have full authority to interpret the contract and requirements and shall determine acceptance of the work under this Contract and every question relative to the fulfillment of the terms and provisions therein. It shall be the duty of the City Manager or designee to enforce the contract terms in a fair and unbiased manner.
If a variation from any requirements is allowed, the City Manager or designee shall grant the same in writing with the reasons for his action outlined, and such action will not invalidate or change the Contract in any other manner.

EXAMINATION OF SITE
Proposer shall carefully examine project site and be familiar with the work required for the project, investigate all site conditions that may affect execution of work as detailed in the construction documents. Contact the City's Procurement Manager or their designee for changes or alterations before proceeding.

ASSURANCES
The responding Proposer shall provide a statement of assurance that the Proposer is not presently in violation of any statutes or regulatory rules that might have an impact on the firm's operations. All applicable laws and regulations of the State of Florida, and ordinances and regulations of the City of St. Pete Beach will apply.

ASSIGNMENT AND TRANSFER OF CONTRACT
The Proposer shall not assign or transfer this Agreement or any part thereof or any interest therein without consent in writing of the City and the Proposer's Surety, and any such assignment or transfer without such written consent shall be null and void.

SUBCONTRACTS
The Proposer shall not subcontract this Agreement or any part thereof or any interest therein without consent in writing of the City and the Proposer's Surety. Any Subcontractor approved by the City will be subject to the same standards and qualifications as stated in this Contract.

PAYMENT
Payment shall be made to the Proposer for work performed under this Contract for the quantities of work as determined in accordance with Payments for Work Completed and Payments Withheld of this Contract. Payment for extra work will be made in accordance with the Changes in Work, Contract Amount, and Contract Time sections below.

PERIOD OF PERFORMANCE
The target completion for the base Scope of Services is January 2027, corresponding to delivery of the Design-Build Readiness Package. The City reserves the right, at its sole discretion and subject to funding

availability, to amend this Agreement to extend the Consultant's services through final (100%) design. Any additional services shall be authorized by written amendment and negotiated in accordance with the Consultants' Competitive Negotiation Act (Section 287.055, Florida Statutes).

CHANGES IN THE WORK

Without invalidating the Contract, the City may, at any time or from time to time, order additions, deletions or revisions in the work authorized by written Change Orders or directives. Upon receipt of a Change Order, the Proposer will proceed with the work involved. All such work shall be executed under the applicable conditions of the Contract documents. If any Change Order causes an increase or decrease in the Contract Amount or any extension or shortening of the Contract Time, an equitable adjustment will be made.

Additional Work performed by the Proposer without authorization of a Change Order will not entitle them to an increase in the Contract Amount or any extension of the Contract Time, except in the case of an emergency (subject to approval by City Manager or designee).

It is the Proposer's responsibility to notify their Surety of any changes affecting the general scope of the Work or change of the Contract Amount and the amount of the applicable bonds shall be adjusted accordingly, and an amended bond document furnished to the City. In the event the City directs the Proposer to make a change in the Work, and if the City and the Proposer do not arrive at a mutually acceptable increase or decrease in the Contract Amount, the Proposer shall not use any such lack of mutual acceptance as a basis or cause to stop or otherwise delay the progress or the execution and completion of any of the work ordered, directed or required pursuant to the Contract Documents.

If the Proposer believes an event or situation has occurred which justifies a change in the Contract Amount or Contract Time, they shall deliver a written notice to the City Manager or designee. Each such written notice shall be delivered promptly and no later than fifteen (15) business days after the Proposer first discovered the occurrence. The Proposer shall be deemed to have waived the right to collect any and all costs incurred more than fifteen (15) business days prior to the date of delivery of the written notice and shall be deemed to have waived the right to seek an extension of the Contract Time with respect to any delay in the Progress Schedule which accrued more than fifteen (15) business days prior to the date of delivery of the written notice.

Any such notice shall include sufficient detail to explain the basis of entitlement to a claim for an adjustment to the Contract Amount of Contract Time. When requested by the City Manager or designee, the Proposer shall furnish any additional information and details as may be required to determine the facts or allegations involved, which shall be provided within fifteen (15) business days of the request unless a longer time period is allowed by the City Manager or designee.

The Proposer shall prepare proposals detailing proposed adjustments to Contract Amount and/or Contract Time and submit them to the City Manager or designee within fifteen (15) business days of the City's issuance of a proposed Change Order or the Proposer's submitting a written notice of a change or claim for an adjustment to the Contract Amount or Contract Time. Proposer's proposals shall be irrevocable for a period of at least sixty (60) business days after receipt by the City. Any delay in the submittal of a complete, adequate and acceptable proposal will not justify an increase in Contract Amount or Contract Time. Proposer agrees that it shall give the City access to any and all of Proposer's and Subcontractors' books, records and other materials relating to proposed Change Orders and other claims for adjustment to Contract Amount or Contract Time.

CHANGE OF CONTRACT AMOUNT

The Contract Amount constitutes the total compensation payable to the Proposer for performing the Work. All duties, responsibilities and obligations assigned to or undertaken by the Proposer shall be at his expense

without change in the Contract Amount. The Contract Amount may only be changed by written Change Order issued by the City. Any claim for an increase in the Contract Amount shall be in writing and delivered to the City Manager or designee within fifteen (15) business days of the occurrence of the event giving rise to the claim.

All claims for adjustment in the Contract Amount shall be determined by the City Manager or designee. However, no claim for an adjustment to the Contract Amount will be considered for unforeseeable causes that were beyond the fault or negligence of the Proposer or his Subcontractors or supplier such as acts of God, floods, riots, etc. This restriction does not restrict submission of claims for additional Contract Time due to events of this nature. Any change in the Contract Amount shall be incorporated in a Change Order.

Proposer proposals or claims shall cover all aspects of the Work involved and shall be fully documented and itemized as to all costs, quantities and charges for overhead and profit. Amounts for Subcontractors or Suppliers at any tier shall be similarly supported. When determining Subcontractors' costs, the methods to be used shall be those used for the Proposer's costs, except that the term "Subcontractor" shall replace the term "Proposer," context permitting.

The value of any Work covered by a Change Order or of any claim for an increase or decrease in the Contract Amount where the Work involved is covered by unit prices contained in the Contract Documents shall be determined by application of unit prices to the quantities of the items involved. If the quantities originally contemplated are so changed in a proposed Change Order, that application of the Unit Prices to the quantities proposed will cause substantial inequity to the City or the Proposer, the applicable unit price(s) shall be equitably adjusted by mutual agreement.

If the value of work covered by a Change Order cannot be established or mutually agreed to utilizing previously established unit rates, the value shall be determined by the City on the basis of an estimate of the out-of-pocket cost and percentages that are acceptable to the City for overhead and profit.

In such case, the Proposer will submit in the form prescribed by the City an itemized cost breakdown together with supporting data.

The amount of credit to be allowed by the Proposer to the City for any such change which results in a net decrease in cost, will be the amount of the actual net decrease as determined by the City. When both additions and credits are involved in any one change, the combined overhead and profit shall be figured on the basis of the net increase, if any.

CHANGE OF CONTRACT TIME

The Contract Time may only be changed by written Change Order. Any claim for an extension in the Contract Time shall be in writing and include an analysis of the Progress Schedule as further described in the Specifications and shall be delivered to the City Manager or designee within fifteen (15) business days of the occurrence of the event giving rise to the claim. All claims for adjustment in the Contract Time shall be determined by the City Manager or designee. Any change in the Contract Time resulting from any such claim shall be incorporated in a Change Order. The Contract Time may be extended for an amount equal to time lost due to unforeseeable causes beyond the control of the Proposer (and his Subcontractors and Suppliers) if he makes a claim therefrom. Such delays shall include, but not be restricted to, acts or neglect by any separate Proposer employed by the City; fires; floods; labor disputes; epidemics; or acts of God.

All time limits stated in the Contract Documents are of the essence to the Contract. The stated time limits are agreed to be adequate to complete the work, including the procurement, manufacture and delivery of all material and equipment required, and account for any and all potential impact, delays, disruptions and costs that may be expected.

PAYMENTS FOR WORK COMPLETED
All payments under this agreement shall comply with the requirements of Florida Statutes, Section 215.422, commonly referred to as the "Prompt Payment Law." This includes timely processing of invoices and adherence to statutory interest provisions for late payments. The Contractor shall submit detailed invoices for services rendered under this agreement. Each invoice must include: Purchase Order or Contract Number, Description of services provided, Dates of service, Total amount due. Payment will be made within 45 days of receipt of a proper invoice and acceptance of deliverables, as required by Florida law. If payment is not made within the statutory timeframe, interest penalties will apply in accordance with Section 215.422, Florida Statutes. Payments will be issued via electronic funds transfer (EFT) unless otherwise agreed in writing. Contractor must provide accurate banking information to facilitate EFT.

PAYMENTS WITHHELD
The City Manager or designee may withhold, or, on account of subsequently discovered evidence, nullify the whole or part of any estimate to such extent as may be necessary to protect the City from loss on account of:

a) Defective work not remedied

b) Claims and/or liens filed or reasonable evidence indicating probable filing of claims

c) Failure of the Proposer to make payments properly to Subcontractors or for labor

d) A reasonable doubt that the Contract can be completed for the balance then unpaid

e) Damage to another Proposer

f) Failure of the Proposer to keep their work progressing in accordance with their time schedule

FINAL PAYMENTS
Upon the completion and acceptance of the work, the City Manager or designee shall issue a certificate that designates that the whole work provided for in this Contract has been completed and accepted by him under the conditions and the terms thereof and shall make the final estimate of the work. After issuance of the certificate, the entire balance found to be due the Proposer, including said retained percentage by the City in accordance with existing state laws as may be retained lawfully by said City, shall pay excepting such sums to the Proposer.

Before the approval of the final payment, the Proposer shall submit evidence satisfactory to the City that states that all payrolls, materials, bills and outstanding indebtedness in connection with this Contract have been paid.

LIENS
If at any time there shall be evidence of any lien or claim for which the City might become liable and which is chargeable to the Proposer, the City shall have the right to retain out of any payment then due or thereafter to become due, an amount sufficient for complete indemnification against such lien or claim. In the event the City has already paid to the Proposer all sums due under this contract or the balance remaining unpaid is insufficient to protect the City, the Proposer and his Surety shall be liable to the City for any loss so sustained.

RESPONSIBILITY OF THE CITY MANAGER OR DESIGNEE
The term "City Manager or designee" wherever used in the Contract shall be the City of St. Pete Beach or its duly authorized representative. Notices of any change in the City Manager or designee shall be given in writing by the City to the Proposer. The City Manager or designee shall have full authority to interpret the Plans and Specifications and shall determine the amount, quality, and acceptance of the work and supplies

to be paid for under the Contract and every question relative to the fulfillment of the terms and provisions therein. It shall be the duty of the City Manager or designee to enforce the Plans and Specifications in a fair and unbiased manner. If a variation from any requirements is allowed the City Manager or designee shall grant the same in writing with the reasons for his action outlined, and such action will not invalidate or change the Contract in any other manner.

LICENSES AND PERMITS

The Proposer shall obtain and pay for all necessary City licenses and work permits and shall faithfully comply with all laws, ordinances and regulations, (Federal, State or local) which may be applicable to the operations to be conducted hereunder, except for those permits obtained by the City. Notwithstanding the provisions above, the Proposer is responsible for non-compliance of all permit requirements, including all fines resulting from Proposer's non-compliance of said requirements.

Chapter II, Section II-4, "Registration of Licenses Obtained From Other Municipalities:" "Persons, partnerships, corporations, or other business entities doing business with the City who are not required to obtain a City occupational license, but who must have either a State or County or Municipal occupational license from another municipality, shall register such occupational license with St. Pete Beach Community Development Department. The City may charge a fee for such registration." The Proposer shall be responsible for obtaining all City, County, State and Federal permits required by those government agencies and must provide documentation of receipt of those permits prior to project commencement. This shall include a notice to commence work letter and the applicable fee, if required. Any sub-contractor hired by the Proposer awarded the project, MUST also register their license with the City.

LABOR PROVISIONS

The Proposer and his Subcontractors shall discharge, whenever ordered to do so by the City Manager or designee, any employee who is disorderly or whose conduct in the opinion of the City Manager or designee is detrimental to the prosecution of the work. No person whose age or physical condition is such as to make this employment dangerous to his/her health and safety or to the health and safety of others shall be employed on the work, and in no event shall any persons under the age of sixteen (16) years be employed. The State of Florida prevailing wage law requires that the Proposer shall fully comply with all provisions contained in Section 215.19, "Schedule of Prevailing Wage Rates for Specified Public Construction." The wage rates set forth by such determination shall apply to this project.

INSURANCE

The Proposer shall procure and maintain at his/her own expense, during the life of the Contract, liability insurance as hereinafter specified. All such insurance shall be subject to the approval of the City for adequacy of protection and shall include a provision preventing cancellation without twenty (20) business days prior notice to the City in writing. The City shall be included as an additional insured on all liability insurance. The liability insurance required is as follows: Proposer's General Public Liability and Property Damage Insurance issued to the Proposer and protecting the Proposer from all claims for personal injury, including death, and all claims for destruction of or damage to property, arising out of or in connection with any operations under this Contract, whether such operations be by the Proposer or by any Subcontractor hired by the Proposer or anyone directly or indirectly employed by the Proposer or hired by the Proposer.

The successful Proposer shall supply and maintain insurance which defends, indemnifies and holds harmless the City of St. Pete Beach, its officers, employees and agents from and against any and all liability, damage claims, demands, costs, judgments, fees, attorney's fees or loss arising directly out of acts or omissions hereunder by the Proposer or third party under the direction or control of the Proposer. Such general and excess liability coverage shall be primary to any other coverage carried by the City of St Pete Beach. Proposer must furnish the City with Certificate of Insurance prior to commencement of work. An

approved Certificate of Insurance furnished by the Proposer's carrier to guarantee the Proposer being insured with the City of St Pete Beach must be named as a certificate holder for this contract. The following minimum coverage:

- Professional Liability Insurance $2,000,000 each occurrence.
- Commercial General Liability Insurance $1,000,000.00.
- Comprehensive General Liability Insurance of $1,000,000.00 each occurrence.
- Personal Injury for $1,000,000.00 each occurrence.
- Automobile Liability $1,000,000.00.
- General Workers Compensation Insurance as required by Florida law.
- Longshore Harbor Workers Compensation Insurance

PROTECTION OF WORK AND PROPERTY
The Proposer shall continuously maintain adequate protection of all their work and materials from damage or theft and shall protect the City's property and all adjacent property from injury or loss arising in connection with activities under their Contract. The Proposer shall make good any such damage, injury, or loss, except such as may be caused by agents or employees of the City.

The Proposer shall take, use, provide, and maintain all necessary precautions, safeguards, and protection to prevent accidents, or injury to persons or property on, about, or adjacent to the site of the work. Should the situation arise that physical security is needed the Proposer will provide security on off days and holidays. The Proposer shall be responsible for all charges incurred with such action.

The Proposer shall post danger signs warning against any hazards created by the work being done under their Contract. They shall designate a responsible member of their organization on the work, whose duty shall be the prevention of accidents, and the name of the person so designated shall be reported to the City Manager or designee and City in writing. In an emergency affecting the safety of life, or of the work or adjoining property, the Proposer, without special instruction or authorization from the City Manager or designee, or City, is hereby permitted to act, at their own discretion, to prevent such threatened loss or injury, and they must take such action if so instructed or authorized by the City Manager or designee. The Proposer shall also protect adjacent property as required by law.

PROPOSAL REVIEW AND CONTRACT AWARD
Failure to submit all documents requested at the time of proposal may deem the Proposer's proposal ineligible for award. The City of St. Pete Beach reserves the right to reject any or all proposals or parts of proposals. The contract shall be awarded by written notice to the responsible and responsive Contractor whose proposal is determined in writing to be the most advantageous to the City, taking into consideration the price and other criteria set forth in this request for proposals. The City may waive any informality.

LOCAL, STATE AND FEDERAL COMPLAINCE REQUIREMENTS
The laws of the State of Florida do apply to any purchase made under this Request for Proposal. Proposers shall comply with all local, state, and federal directives, orders and laws as applicable to their proposal and subsequent contracts include but not limited to Equal Employment Opportunity, Minority Business Enterprise, and OSHA as applicable to this contract.

Compliance with Fla. Stat. 448.095:

- Proposer agrees to comply with all applicable portions of Fla. Stat. 448.095. Proposer must use the

U.S. Department of Homeland Security's E-Verify System, hhttps://e-verify.uscis.gov/emp, to verify the employment eligibility of all employees hired on or after January 1, 2021 during the term of this Agreement.

- Subcontractors (i) Proposer shall also require all subcontractors performing work under this Agreement to use the E-Verify system for any employees they may hire during the term of this Agreement. (ii) Subcontractors shall provide Proposer with an affidavit stating the subcontractor does not employ, contract with, or subcontract with an unauthorized alien, as defined by Fla. Stat. 448.095 (iii) Proposer shall provide a copy of such affidavit to the City upon receipt and shall maintain a copy for the duration of the Agreement.

- Proposer must provide evidence of compliance with Fla. Stat. 448.05 by January 1, 2021. Evidence may consist of, but is not limited to, providing notice of Proposer's E-Verify number.

- Failure to comply with this provision is a material breach of the Agreement, and the City may choose to terminate the Agreement at its sole discretion. Proposer may be liable for all costs associated with the City securing the same services, inclusive, but not limited to, higher costs for the same services and proposal costs (if necessary). Any challenge to termination under this provision must be filed in the Circuit Court no later than 20 calendar days after the date of termination. If this agreement is terminated for a violation of the statute by the Proposer, the Proposer may not be awarded a public agreement for a period of 1 year after date of termination.

RESERVES THE RIGHT

The City reserves the right to accept or reject any and/or all proposals, to waive irregularities and technicalities, and to request re-submission. If only one proposal is received by the proposal date and time listed, the proposal may or may not be rejected by the City depending upon proposal review and the needs of the City.

The City reserves the right to select a firm with or without additional interviews and may decide to select any of the firms submitting proposals. The City reserves the right to award the contract to a responsible proposer submitting a responsible proposal, with a resulting negotiated agreement which is most advantageous and in the best interest of the City.

Proposers, Proposers, their agents, and associates shall not contact or solicit any City Commission member, City employee, or official regarding this RFP during any phase of the proposalding process. Failure to comply with the provision may result in disqualification of the Proposer, at the option of the City. Only that individual listed, or an approved designee, as the contact person for this RFP shall be contacted.

SUBMITTAL WITHDRAWAL

After submittals are opened, corrections or modifications to submittals are not permitted, but a responding firm may be permitted to withdraw an erroneous submittal prior to the award by the City Commission, if the following is established:

- That the responding firm acted in good faith in submitting the submittal;
- That in preparing the submittal there was an error of such magnitude that enforcement of the submittal would work severe hardship upon the respondent;
- That the error was not the result of gross negligence or willful inattention on the part of the respondent;
- That the error was discovered and communicated to the City within twenty-four (24) hours of submittal opening, along with a request for permission to withdraw the submittal; or
- The responding firm submits documentation and an explanation of how the error was made.

CONE OF SILENCE
Respondents to this solicitation or persons acting on their behalf may not contact, between the release of the solicitation and the end of the 72-hour period following the agency posting the notice of intended award, excluding Saturdays, Sundays, and state holidays, any employee or officer of the executive or legislative branch concerning any aspect of this solicitation, except in writing to the procurement officer or as provided in the solicitation documents. Violation of this provision may be grounds for rejecting a response.

TERMINATION
The resulting contract may be canceled by the City when:

- Sufficient funds are not available to continue its full and faithful performance of this contract.
- There is sub-standard or non-performance of contract.
- The City wishes to terminate at any time and for any reason, upon giving thirty (30) days prior written notice to the other party.

The resulting contract may be canceled by either party in the event of substantial failure to perform in accordance with the terms by the other party through no fault of the terminating party.

FISCAL NON-FUNDING

If funds for the requested services described herein are not appropriated via the annual budget adoption process, the City reserves the right to cancel this Agreement immediately upon written notice to the vendor.

PROJECT RECORDS
The awarded firm shall maintain auditable records concerning the procurement to account for all receipts and expenditures, and to document compliance with the Contract. These records shall be kept in accordance with generally accepted accounting methods, and the City of St. Pete Beach reserves the right to determine the record-keeping method in the event of non-conformity. These records shall be maintained for three (3) years after final payment has been made and shall be readily available to City personnel with reasonable notice, and to other persons in accordance with the Florida Public Disclosure Statutes. Additionally, the awarded firm shall abide by and comply with Florida Statutes regarding public records. Specifically, the firm shall be aware of the provisions found in Section 119.0701, Florida Statutes.

Upon completion of the project, all reports, studies, recommendations, forms, and other project specific information will need to be submitted in paper and in an electronic file format (.PDF, .JPEG) on CD or USB storage device.

V. REFERENCES & MINIMUM QUALIFICATIONS

Provide at least three (3) or more professional, business references with which you have contracted to provide similar services in the past five (5) years. Include the name of the person, its organization, telephone number, fax number, and e-mail address. Include any governmental agencies, with the same contact and descriptive information for which you have provided similar service within the past five (5) years.

Provide a brief description of the history and capabilities of the firm. Describe the types of projects or services the firm performs/has performed and the dollar value of each. Provide information regarding your firm's ability to complete this project. Demonstrate that the firm's personnel have experience with similar projects.

Identify all unresolved and ongoing claims and disputes against your firm in excess of $500,000. Include any claims against the principals of your firm or any claims your company may have against a third party. Provide a history of litigation, including the outcomes, for the past five (5) years.

The responding firm shall provide a statement of assurance that the firm is not presently in violations of any statutes or regulatory rules that might have an impact on the firm's operations. All applicable laws and regulations of the State of Florida and ordinances and regulations of the City of St. Pete Beach will apply.

Provide the overall bonding capacity for the company and provide a history of any claims against the Proposer's previous bonds for the past five (5) years.

The City shall be the sole final judge of qualifications of Proposer to perform service and reserves the exclusive right to accept or reject any proposal as it deems to be in the best interests of the City. The City reserves the right to make such investigation, as it deems necessary, to determine the ability of any proposer to perform the work or service requested. Failure to comply with the requirements of this section may be grounds for rejecting a response.

VI. CONTRACTOR'S PROPOSAL SUBMITTAL

The company that is submitting a proposal declares that it has extensive experience providing Task Work Order driven Civil On-Call Construction Services.

The undersigned, as Proposer, hereby declares that the only person or persons interested in the Proposal as principal or principals are named herein, and that no person other than herein mentioned has any interest in the Proposal or in the Agreement to be entered into; that this Proposal or Agreement is made without connection with any other person, company, or parties making a Proposal; and that it is in all respects fair and in good faith without collusion or fraud.

The Proposer further declares that they have examined the site of the work and informed themselves fully in regard to all conditions pertaining to the place where the work is to be done; that they have examined the Plans and Specifications for the work and Contract Documents relative thereto, and have read all special provisions furnished prior to the opening of proposals; and that they have satisfied themselves relative to the materials to be supplied and work to be performed.

The Proposer proposes and agrees, if the Proposal is accepted, to contract with the City of St. Pete Beach, Florida, in the form of an Agreement specified for **"Civil On Call Construction Services"** in St. Pete Beach, Florida, in full and complete accordance with the shown, noted, described, and reasonably intended requirements of the Plans, Specifications, and Contract Documents, to the full and entire satisfaction of the City of St. Pete Beach, Florida.

The successful Proposer shall be required to utilize the template Agreement in this Request for Proposals (RFP) and any questions regarding the Agreement must be addressed during the RFP process before submittal. The City reserves the right to respond or not respond to questions in the form of an addendum.

The Proposer proposes to furnish all materials, equipment, labor, and perform the work submitted in their proposal schedule for the City of St. Pete Beach **"Civil On Call Construction Services."**

COMPANY:_____ DATE: _____

ADDRESS:_____ PHONE:_____

PROPOSER: _____ NAME: _____

(SIGNATURE) (PRINT NAME & TITLE)

STATE OF FLORIDA
COUNTY OF _____

The foregoing instrument was sworn to (or affirmed), subscribed, and acknowledged before me by means of ☐ physical presence or ☐ online notarization, this _____ day of _____, 2026, by_____, who is personally known to me or has produced _____ as identification.

(SEAL)

_____
Notary Public – State of Florida

_____
(Print, Type, Stamp, or Commissioned Name of Notary Public)

SUBMIT PROPOSAL TO: Electronically via Bonfire only

VII. PUBLIC ENTITY CRIMINAL AFFIDAVIT

SWORN STATEMENT – PUBLIC ENTITY CRIMES

PURSUANT TO § 287.133 (3)(a), FLORIDA STATUTES, ON PUBLIC ENTITY CRIMES
THE FORM MUST BE SIGNED AND SWORN TO IN THE PRESENCE OF A NOTARY PUBLIC OR OTHER OFFICIAL AUTHORIZED TO ADMINISTER OATHS.

1. This sworn statement is submitted to: City of St. Pete Beach
by: _____
(Print individual's name and title)

for: _____
(Print name of entity submitting sworn statement)

at: _____
(Business address)

and (if applicable), its Federal Employer Identification Number (FEIN):

_____
(FEIN)
or, if the entity has no FEIN, include the Social Security Number:

_____
(SSN)

by the individual signing this sworn statement:
_____ (Signature)

2. I understand that a "public entity crime" as defined in § 287.133 (1)(g), Fla. Stat., means a violation of any State or Federal law by a person with respect to and directly related to the transaction of business with any public entity or with an agency or political subdivision of any other state or of the United States including, but not limited to, any proposal or contract for goods or services, any lease for real property, or any contract for the construction or repair of a public building or public work, involving antitrust, fraud, theft, bribery, collusion, racketeering, conspiracy, or material misrepresentation.

3. I understand that "convicted" or "conviction" as defined in § 287.133 (1)(b), Fla. Stat., means a finding of guilt or a conviction of public entity crime with or without an adjudication of guilt in any Federal or State trial court of record relating to charges brought by indictment or information after July 1, 1989, as a result of a jury verdict, non-jury trial, or entry of a plea of guilty or nolo contendere.

4. I understand that an "affiliate" as defined in § 287.133 (1)(a), Fla. Stat., means:
   a. A predecessor or successor of a person convicted of a public entity crime or
   b. An entity under the control of any natural person who is active in the management of the entity and who has been convicted of a public entity crime. The term "affiliate" includes those officers, directors, executives, partners, shareholders, employees, members, and agents who are active in the management of an affiliate. The ownership by one (1) person of shares constituting a controlling interest in another person or a pooling of equipment or income among persons when not for fair market value under the arm's length agreement, shall be a prima facie case that one (1) person controls another person. A person who knowingly enters into a joint venture with a person who has been convicted of a public crime in Florida during the preceding thirty-six (36) months shall be considered an affiliate.

5. I understand that a "person" as defined in Section 287.133 (1)(e), Fla. Stat., means any natural person or any entity organized under the laws of any state or of the United States with the legal power to enter into a binding contract and which proposals or applies to proposal on contracts let by a public entity, or which otherwise transacts or applies to transact business with a public entity. The term "person" includes those officers, directors, executives, partners, shareholders, employees, members, and agents who are active in management of an entity.

6. Based on information and belief, the **statement which I have marked below is true** in relation to the entity submitting this sworn statement (indicate which statement applies).

☐ Neither the entity submitting this sworn statement, nor any of its officers, directors, executives, partners, shareholders, employees, members, or agents who are active in the management of the entity nor any affiliate of the entity has been charged with and convicted of a public entity crime subsequent to July 1, 1989.

☐The entity submitting this sworn statement or one (1) or more of its officers, directors, executives, partners, shareholders, employees, members, or agents who are active in the management of the entity or an affiliate of the entity has been charged with and convicted of a public entity crime subsequent to July 1, 1989.

☐The entity submitting this sworn statement or one (1) or more of its officers, directors, executives, partners, shareholders, employees, members, or agents who are active in the management of the entity or an affiliate of the entity has been charged with and convicted of a public entity crime subsequent to July 1, 1989. However, there has been a subsequent proceeding before a Hearing Office of the State of Florida, Division of Administrative Hearings and the Final Order entered by the Hearing Officer determined that it was not in the public interest to place the entity submitting this sworn statement on the convicted vendor list (attach a copy of the final order).

I UNDERSTAND THAT THE SUBMISSION OF THIS FORM TO THE CONTRACTING OFFICE FOR THE PUBLIC ENTITY IDENTIFIED IN PARAGRAPH 1 ABOVE IS FOR THE PUBLIC ENTITY ONLY AND THAT THIS FORM IS VALID THROUGH DECEMBER 31 OF THE CALENDAR YEAR IN WHICH IT IS FILED. I ALSO UNDERSTAND THAT I AM REQUIRED TO INFORM THE PUBLIC ENTITY PRIOR TO ENTERING INTO A CONTRACT IN EXCESS OF THE THRESHOLD AMOUNT PROVIDED IN SECTION 287.017, FLORIDA STATUTES, FOR CATEGORY TWO OF ANY CHANGE IN THE INFORMATION CONTAINED IN THIS FORM.

STATE OF FLORIDA
COUNTY OF _____

The foregoing instrument was sworn to (or affirmed), subscribed, and acknowledged before me by means of ☐ physical presence or ☐ online notarization, this _____ day of _____, 2026, by_____, who is personally known to me or has produced _____ as identification.

(SEAL)

_____
Notary Public – State of Florida

_____
(Print, Type, Stamp, or Commissioned
Name of Notary Public)

VIII. NON-COLLUSION AFFADAVIT

STATE OF _____ COUNTY OF _____

I state that **I**_____ of _____,
(Name and Title) (Name of Firm)

I am authorized to make this affidavit on behalf of my firm and its owner, directors and officers. I am the person responsible in my firm for the price(s) and amount(s) of this Response, and the preparation of the Response. I state that:

1. The price(s) and amount(s) of this Response have been arrived at independently and without consultation, communication or agreement with any other Provider, potential provider, Proposal, or potential Proposal.
2. Neither the price(s) nor the amount(s) of this Response, and neither the approximate price(s) nor approximate amount(s) of this Response, have been disclosed to any other firm or person who is a Provider, potential Provider, Proposal, or potential Proposal, and they will not be disclosed before Proposal opening.
3. No attempt has been made or will be made to induce any firm or persons to refrain from submitting a Response for this contract, or to submit a price(s) higher that the prices in this Response, or to submit any intentionally high or noncompetitive price(s) or other form of complementary Response.
4. The Response of my firm is made in good faith and not pursuant to any agreement or discussion with, or inducement from, any firm or person to submit a complementary or other noncompetitive Response.
5. _____, its affiliates, subsidiaries, officers, director, and employees (Name of Firm) are not currently under investigation, by any governmental agency and have not in the last three years been convicted or found liable for any act prohibited by State or Federal law in any jurisdiction, involving conspiracy or collusion with respect to Proposal, on any public contract, except as follows:

I state that I and the named firm understand and acknowledge that the above representations are material and important, and will be relied on by the State of Florida for which this Response is submitted. I understand and my firm understands that any misstatement in this affidavit is, and shall be treated as, fraudulent concealment from the State of Florida of the true facts relating to the submission of responses for this contract.

Name of Organization:_____ Signed By: _____

Print Name:_____

The foregoing instrument was sworn to (or affirmed), subscribed, and acknowledged before me by means of ☐ physical presence or ☐ online notarization, this _____ day of _____, 2026, by _____, who is personally known to me or has produced _____ as identification.

(SEAL)

_____
Notary Public – State of Florida

_____
(Print, Type, Stamp, or Commissioned
Name of Notary Public)

Bid Form for City of St Pete Beach
On-Call Civil Construction Services
Request for Proposal

Specifications for the numbered pay items can be found in the current FDOT "Standard Specifications for Road and Bridge Construction".
Bid quantities are for comparison purposes only. This contract consists of various projects which are not yet defined and no quantities are guaranteed.

Pay Item No.	Item Description	Units	Est. Quantity	Unit Price	Amount
0101 1 (2501-5000)	MOBILIZATION (PER WORK ASSIGNMENT/LOCATION) - $2,501 TO $5,000	LS	1		$0.00
0101 1 (5501-25000)	MOBILIZATION (PER WORK ASSIGNMENT/LOCATION) - $5,001 TO $25,000	LS	1		$0.00
0101 1 (25001-50000)	MOBILIZATION (PER WORK ASSIGNMENT/LOCATION) - $25,001 TO $50,000	LS	1		$0.00
0101 1 (50001-150000)	MOBILIZATION (PER WORK ASSIGNMENT/LOCATION) - $50,001 TO $150,000	LS	1		$0.00
0101 1 (150001-250000)	MOBILIZATION (PER WORK ASSIGNMENT/LOCATION) - $150,001 TO $250,000	LS	1		$0.00
0101 1 (250001-350000)	MOBILIZATION (PER WORK ASSIGNMENT/LOCATION) - $250,001 TO $350,000	LS	1		$0.00
0101 1 (350001-500000)	MOBILIZATION (PER WORK ASSIGNMENT/LOCATION) - $350,001 to $500,000	LS	1		$0.00
0101 1 (500001+)	MOBILIZATION (PER WORK ASSIGNMENT/LOCATION) - $500,001 or more	LS	1		$0.00
0101 1 (2501-5000)	EMERGENCY MOBILIZATION (PER WORK ASSIGNMENT/LOCATION) - $2,501 TO $5,000	LS	1		$0.00
0101 1 (5501-25000)	EMERGENCY MOBILIZATION (PER WORK ASSIGNMENT/LOCATION) - $5,001 TO $25,000	LS	1		$0.00
0101 1 (25001-50000)	EMERGENCY MOBILIZATION (PER WORK ASSIGNMENT/LOCATION) - $25,001 TO $50,000	LS	1		$0.00
0101 1 (50001-150000)	EMERGENCY MOBILIZATION (PER WORK ASSIGNMENT/LOCATION) - $50,001 TO $150,000	LS	1		$0.00
0101 1 (150001-250000)	EMERGENCY MOBILIZATION (PER WORK ASSIGNMENT/LOCATION) - $150,001 TO $250,000	LS	1		$0.00
0102 1	MAINTENANCE OF TRAFFIC	Lump Sum (LS) cost to be assigned for each Task Order and shall not exceed 10% of the proposed construction cost.			
0102 3	COMMERCIAL MATERIAL FOR TEMPORARY DRIVEWAY MAINTENANCE	CY	50		$0.00
0102 14	TRAFFIC CONTROL OFFICER	HR	500		$0.00
0102 60	WORK ZONE SIGN	ED	6000		$0.00
0102 61	BUSINESS SIGN	EA	5		$0.00
0102 71 11	BARRIER WALL, TEMPORARY, F&I, CONCRETE	LF	200		$0.00
0102 71 13	BARRIER WALL, TEMPORARY, F&I, LOW PROFILE, CONCRETE	LF	200		$0.00
0102 71 14	BARRIER WALL, TEMPORARY, F&I, TYPE K	LF	200		$0.00
0102 71 21	BARRIER WALL, TEMPORARY, RELOCATE, CONCRETE	LF	200		$0.00
0102 71 23	BARRIER WALL, TEMPORARY, RELOCATE, LOW PROFILE, CONCRETE	LF	200		$0.00
0102 71 24	BARRIER WALL, TEMPORARY, RELOCATE, TYPE K	LF	200		$0.00
0102 73	TEMPORARY GUARDRAIL	LF	20		$0.00

0102 74 1	CHANNELIZING DEVICE- TYPES I, II, DI, VP, DRUM, OR LCD	ED	15000		$0.00
0102 74 2	CHANNELIZING DEVICE, TYPE III, 6'	ED	1000		$0.00
0102 74 7	CHANNELIZING DEVICE- PEDESTRIAN LCD (LONGITUDINAL CHANNELIZING DEVICE)	LF	1000		$0.00
0102 75 1	TEMPORARY SEPARATOR, F&I REMOVE	LF	500		$0.00
0102 75 2	TEMPORARY SEPARATOR, F&I REMAIN	LF	500		$0.00
0102 75 3	TEMPORARY SEPARATOR, INSTALL	LF	500		$0.00
0102 75 4	TEMPORARY SEPARATOR, RELOCATE	LF	500		$0.00
0102 75 5	TEMPORARY SEPARATOR, REMOVE	LF	500		$0.00
0102 76	ARROW BOARD / ADVANCE WARNING ARROW PANEL	ED	250		$0.00
0102 78	TEMPORARY RETROREFLECTIVE PAVEMENT MARKER	EA	50		$0.00
0102 89 1	TEMPORARY CRASH CUSHION, REDIRECTIVE OPTION	LO	5		$0.00
0102 99	PORTABLE CHANGEABLE MESSAGE SIGN, TEMPORARY	ED	600		$0.00
0102 104	TEMPORARY SIGNALIZATION AND MAINTENANCE, INTERSECTION	ED	100		$0.00
0102 107 1	TEMPORARY TRAFFIC DETECTION AND MAINTENANCE, INTERSECTION	ED	100		$0.00
0102 150 1	PORTABLE REGULATORY SIGN	ED	50		$0.00
0102 150 2	RADAR SPEED DISPLAY UNIT	ED	50		$0.00
0102 911 1	PAVEMENT MARKING REMOVABLE TAPE, WHITE OR BLACK, SKIP	LF	500		$0.00
0102 911 2	PAVEMENT MARKING REMOVABLE TAPE, WHITE, BLACK, SOLID	LF	500		$0.00
0102 911 3	PAVEMENT MARKING REMOVABLE TAPE, WHITE OR BLACK, OTHER	SF	25		$0.00
0102 912 1	PAVT MARKING REMOVABLE TAPE, YELLOW, SKIP	LF	500		$0.00
0102 912 2	PAVEMENT MARKING REMOVABLE TAPE, YELLOW, SOLID	LF	500		$0.00
0102 912 3	PAVEMENT MARKING REMOVABLE TAPE, YELLOW, OTHER	SF	25		$0.00
0104 1	ARTIFICIAL COVERINGS /ROLLED EROSION CONTROL PRODUCTS	SY	150		$0.00
0104 10 3	SEDIMENT BARRIER	LF	5000		$0.00
0104 11	FLOATING TURBIDITY BARRIER	LF	100		$0.00
0104 12	STAKED TURBIDITY BARRIER- NYLON REINFORCED PVC	LF	100		$0.00
0104 13 1	STAKED SILT FENCE, TYPE III	LF	500		$0.00
0104 13 2	STAKED SILT FENCE, TYPE IV	LF	500		$0.00
0104 18	INLET PROTECTION SYSTEM	EA	100		$0.00

0107 1	LITTER REMOVAL	AC	10		$0.00
0107 2	MOWING	AC	10		$0.00
0110 2 1	CLEARING & GRUBBING	AC	10		$0.00
0110 3	REMOVAL OF EXISTING STRUCTURES/BRIDGES	SF	20		$0.00
0110 4 10	REMOVAL OF EXISTING CONCRETE	SY	2000		$0.00
0110 7 1	MAILBOX, F&I SINGLE	EA	5		$0.00
0120 1	REGULAR EXCAVATION	CY	3000		$0.00
0120 3	LATERAL DITCH EXCAVATION	CY	100		$0.00
0120 4	SUBSOIL EXCAVATION	CY	100		$0.00
0120 5	CHANNEL EXCAVATION	CY	100		$0.00
0120 6	EMBANKMENT	CY	500		$0.00
0121 70	FLOWABLE FILL	CY	50		$0.00
0125 1	EXCAVATION FOR STRUCTURES	CY	25		$0.00
0145 1	GEOSYNTHETIC REINFORCED SOIL SLOPE	SF	25		$0.00
0160 4	TYPE B STABILIZATION	SY	7000		$0.00
0162 1 11	PREPARED SOIL LAYER-6" DEPTH	SY	50		$0.00
0162 1 12	PREPARED SOIL LAYER, FINISH SOIL LAYER, 12"	SY	50		$0.00
0162 1 21	PREPARED SOIL LAYER, ORGANIC SOIL LAYER, 6"	SY	50		$0.00
285701	OPTIONAL BASE, BASE GROUP 01	SY	100		$0.00
285702	OPTIONAL BASE, BASE GROUP 02	SY	100		$0.00
285703	OPTIONAL BASE, BASE GROUP 03	SY	100		$0.00
285704	OPTIONAL BASE, BASE GROUP 04	SY	1000		$0.00
285705	OPTIONAL BASE, BASE GROUP 05	SY	100		$0.00
285706	OPTIONAL BASE, BASE GROUP 06	SY	1000		$0.00
285707	OPTIONAL BASE, BASE GROUP 07	SY	100		$0.00
285708	OPTIONAL BASE, BASE GROUP 08	SY	1000		$0.00
285709	OPTIONAL BASE, BASE GROUP 09	SY	100		$0.00
285710	OPTIONAL BASE GROUP 10	SY	100		$0.00
285711	OPTIONAL BASE, BASE GROUP 11	SY	100		$0.00

285712	OPTIONAL BASE, BASE GROUP 12	SY	100		$0.00
285713	OPTIONAL BASE, BASE GROUP 13	SY	100		$0.00
285714	OPTIONAL BASE, BASE GROUP 14	SY	100		$0.00
285715	OPTIONAL BASE, BASE GROUP 15	SY	100		$0.00
0327 70 1	MILLING EXIST ASPH PAVT, 1" AVG DEPTH	SY	1000		$0.00
0327 70 2	MILLING EXIST ASPH PAVT, 3 1/2" AVG DEPTH	SY	200		$0.00
0327 70 3	MILLING EXIST ASPH PAVT, 4 1/2" AVG DEPTH	SY	200		$0.00
0327 70 4	MILLING EXIST ASPH PAVT, 3" AVG DEPTH	SY	200		$0.00
0327 70 5	MILLING EXIST ASPH PAVT, 2" AVG DEPTH	SY	200		$0.00
0327 70 6	MILLING EXIST ASPH PAVT, 1 1/2" AVG DEPTH	SY	5000		$0.00
0327 70 7	MILLING EXIST ASPH PAVT, 4" AVG DEPTH	SY	200		$0.00
0327 70 8	MILLING EXIST ASPH PAVT, 2 1/2" AVG DEPTH	SY	200		$0.00
0327 70 11	MILLING EXIST ASPH PAVT, 2 1/4" AVG DEPTH	SY	200		$0.00
0327 70 12	MILLING EXIST ASPH PAVT, 1 1/4" AVG DEPTH	SY	200		$0.00
0327 70 13	MILLING EXIST ASPH PAVT, 1 3/4" AVG DEPTH	SY	200		$0.00
0327 70 15	MILLING EXIST ASPH PAVT, 2 3/4" AVG DEPTH	SY	200		$0.00
0327 70 16	MILLING EXIST ASPH PAVT, 1/2" AVG DEPTH	SY	200		$0.00
0327 70 17	MILLING EXIST ASPH PAVT, 3 1/4" AVG DEPTH	SY	200		$0.00
0327 70 19	MILLING EXIST ASPH PAVT, 3/4" AVG DEPTH	SY	200		$0.00
0327 70 20	MILLING EXIST ASPH PAVT, 3 3/4" AVG DEPTH	SY	200		$0.00
0334 1 12 (1-99)	SUPERPAVE ASPHALTIC CONC, TRAFFIC B, 1-99 TONS	TN	50		$0.00
0334 1 12 (100-199)	SUPERPAVE ASPHALTIC CONC, TRAFFIC B, 100 - 199 TONS	TN	150		$0.00
0334 1 12 (200-300)	SUPERPAVE ASPHALTIC CONC, TRAFFIC B, 200 - 300 TONS	TN	250		$0.00
0334 1 12 (300+)	SUPERPAVE ASPHALTIC CONC, TRAFFIC B, 300 TONS OR MORE	TN	350		$0.00
0334 1 13 (1-99)	SUPERPAVE ASPHALTIC CONC, TRAFFIC C 1 - 99 TONS	TN	50		$0.00
0334 1 13 (100-199)	SUPERPAVE ASPHALTIC CONC, TRAFFIC C 100 - 199 TONS	TN	150		$0.00
0334 1 13 (200-300)	SUPERPAVE ASPHALTIC CONC, TRAFFIC C 200 -300 TONS	TN	250		$0.00
0334 1 13 (300+)	SUPERPAVE ASPHALTIC CONC, TRAFFIC C 300 TONS OR MORE	TN	350		$0.00
0334 1 52 (0-99)	SUPERPAVE ASPHALTIC CONCRETE, TRAFFIC B, PG76-22 0-99 TONS	TN	50		$0.00

0334 1 52 (100-199)	SUPERPAVE ASPHALTIC CONCRETE, TRAFFIC B, PG76-22 100-199 TONS	TN	150		$0.00
0334 1 52 (200-300)	SUPERPAVE ASPHALTIC CONCRETE, TRAFFIC B, PG76-22 200-300 TONS	TN	250		$0.00
0334 1 52 (300+)	SUPERPAVE ASPHALTIC CONCRETE, TRAFFIC B, PG76-22 300 TONS OR MORE	TN	350		$0.00
0334 1 53 (0-99)	SUPERPAVE ASPHALTIC CONCRETE, TRAFFIC C, PG76-22 0-99 TONS	TN	50		$0.00
0334 1 53 (100-199)	SUPERPAVE ASPHALTIC CONCRETE, TRAFFIC C, PG76-22 100-199 TONS	TN	150		$0.00
0334 1 53 (200-300)	SUPERPAVE ASPHALTIC CONCRETE, TRAFFIC C, PG76-22 200-300 TONS	TN	250		$0.00
0334 1 53 (300+)	SUPERPAVE ASPHALTIC CONCRETE, TRAFFIC C, PG76-22 300 TONS OR MORE	TN	350		$0.00
0334 1 54 (0-99)	SUPERPAVE ASPHALTIC CONCRETE, TRAFFIC D, PG76-22 0-99 TONS	TN	50		$0.00
0334 1 54 (100-199)	SUPERPAVE ASPHALTIC CONCRETE, TRAFFIC D, PG76-22 100-199 TONS	TN	150		$0.00
0334 1 54 (200-300)	SUPERPAVE ASPHALTIC CONCRETE, TRAFFIC D, PG76-22 200-300 TONS	TN	250		$0.00
0334 1 54 (300+)	SUPERPAVE ASPHALTIC CONCRETE, TRAFFIC D, PG76-22 300 TONS OR MORE	TN	350		$0.00
0334 1 56 (1-99)	SUPERPAVE ASPHALTIC CONCRETE, TRAFFIC B, HIGH POLYMER 0-99 TONS	TN	50		$0.00
0334 1 56 (100-199)	SUPERPAVE ASPHALTIC CONCRETE, TRAFFIC B, HIGH POLYMER 100-199 TONS	TN	150		$0.00
0334 1 56 (200-300)	SUPERPAVE ASPHALTIC CONCRETE, TRAFFIC B, HIGH POLYMER 200-300 TONS	TN	250		$0.00
0334 1 56 (300+)	SUPERPAVE ASPHALTIC CONCRETE, TRAFFIC B, HIGH POLYMER 300 TONS OR MORE	TN	350		$0.00
0334 1 57 (0-99)	SUPERPAVE ASPHALTIC CONCRETE, TRAFFIC C, HIGH POLYMER 0-99 TONS	TN	50		$0.00
0334 1 57 (100-199)	SUPERPAVE ASPHALTIC CONCRETE, TRAFFIC C, HIGH POLYMER 100-199 TONS	TN	150		$0.00
0334 1 57 (200-300)	SUPERPAVE ASPHALTIC CONCRETE, TRAFFIC C, HIGH POLYMER 200-300 TONS	TN	250		$0.00
0334 1 57 (300+)	SUPERPAVE ASPHALTIC CONCRETE, TRAFFIC C, HIGH POLYMER 300 TONS OR MORE	TN	350		$0.00
0334 1 58 (0-99)	SUPERPAVE ASPHALTIC CONCRETE, TRAFFIC D, HIGH POLYMER 0-99 TONS	TN	50		$0.00
0334 1 58 (100-199)	SUPERPAVE ASPHALTIC CONCRETE, TRAFFIC D, HIGH POLYMER 100-199 TONS	TN	150		$0.00
0334 1 58 (200-300)	SUPERPAVE ASPHALTIC CONCRETE, TRAFFIC D, HIGH POLYMER 200-300 TONS	TN	250		$0.00
0334 1 58 (300+)	SUPERPAVE ASPHALTIC CONCRETE, TRAFFIC D, HIGH POLYMER 300 TONS OR MORE	TN	350		$0.00
0337 7 80 (0-99)	ASPHALT CONCRETE FRICTION COURSE,TRAFFIC B, FC-9.5, PG 76-22 0-99 TONS	TN	50		$0.00
0337 7 80 (100-199)	ASPHALT CONCRETE FRICTION COURSE,TRAFFIC B, FC-9.5, PG 76-22 100-199 TONS	TN	150		$0.00
0337 7 80 (200-300)	ASPHALT CONCRETE FRICTION COURSE,TRAFFIC B, FC-9.5, PG 76-22 200-300 TONS	TN	250		$0.00
0337 7 80 (300+)	ASPHALT CONCRETE FRICTION COURSE,TRAFFIC B, FC-9.5, PG 76-22 300 TONS OR MORE	TN	350		$0.00
0337 7 81 (0-99)	ASPHALT CONCRETE FRICTION COURSE,TRAFFIC B, FC-12.5, PG 76-22 0-99 TONS	TN	50		$0.00
0337 7 81 (100-199)	ASPHALT CONCRETE FRICTION COURSE,TRAFFIC B, FC-12.5, PG 76-22 100-199 TONS	TN	150		$0.00

0337 7 81 (200-300)	ASPHALT CONCRETE FRICTION COURSE,TRAFFIC B, FC-12.5, PG 76-22 200-300 TONS	TN	250		$0.00
0337 7 81 (300+)	ASPHALT CONCRETE FRICTION COURSE,TRAFFIC B, FC-12.5, PG 76-22 300 TONS OR MORE	TN	350		$0.00
0337 7 82 (0-99)	ASPHALT CONCRETE FRICTION COURSE,TRAFFIC C, FC-9.5, PG 76-22 0-99 TONS	TN	50		$0.00
0337 7 82 (100-199)	ASPHALT CONCRETE FRICTION COURSE,TRAFFIC C, FC-9.5, PG 76-22 100-199 TONS	TN	150		$0.00
0337 7 82 (200-300)	ASPHALT CONCRETE FRICTION COURSE,TRAFFIC C, FC-9.5, PG 76-22 200-300 TONS	TN	250		$0.00
0337 7 82 (300+)	ASPHALT CONCRETE FRICTION COURSE,TRAFFIC C, FC-9.5, PG 76-22 300 TONS OR MORE	TN	350		$0.00
0337 7 83 (0-99)	ASPHALT CONCRETE FRICTION COURSE,TRAFFIC C, FC-12.5, PG 76-22 0-99 TONS	TN	50		$0.00
0337 7 83 (100-199)	ASPHALT CONCRETE FRICTION COURSE,TRAFFIC C, FC-12.5, PG 76-22 100-199 TONS	TN	150		$0.00
0337 7 83 (200-300)	ASPHALT CONCRETE FRICTION COURSE,TRAFFIC C, FC-12.5, PG 76-22 200-300 TONS	TN	250		$0.00
0337 7 83 (300+)	ASPHALT CONCRETE FRICTION COURSE,TRAFFIC C, FC-12.5, PG 76-22 300 TONS OR MORE	TN	350		$0.00
0337 7 85 (0-99)	ASPHALT CONCRETE FRICTION COURSE,TRAFFIC D, FC-12.5, PG 76-22 0-99 TONS	TN	50		$0.00
0337 7 85 (100-199)	ASPHALT CONCRETE FRICTION COURSE,TRAFFIC D, FC-12.5, PG 76-22 100-199 TONS	TN	150		$0.00
0337 7 85 (200-300)	ASPHALT CONCRETE FRICTION COURSE,TRAFFIC D, FC-12.5, PG 76-22 200-300 TONS	TN	250		$0.00
0337 7 85 (300+)	ASPHALT CONCRETE FRICTION COURSE,TRAFFIC D, FC-12.5, PG 76-22 300 TONS OR MORE	TN	350		$0.00
0337 7 90 (0-99)	ASPHALT CONCRETE FRICTION COURSE,TRAFFIC B, FC-9.5, HIGH POLYMER 0-99 TONS	TN	50		$0.00
0337 7 90 (100-199)	ASPHALT CONCRETE FRICTION COURSE,TRAFFIC B, FC-9.5, HIGH POLYMER 100-199 TONS	TN	150		$0.00
0337 7 90 (200-300)	ASPHALT CONCRETE FRICTION COURSE,TRAFFIC B, FC-9.5, HIGH POLYMER 200-300 TONS	TN	250		$0.00
0337 7 90 (300+)	ASPHALT CONCRETE FRICTION COURSE,TRAFFIC B, FC-9.5, HIGH POLYMER 300 TONS OR MORE	TN	350		$0.00
0337 7 93 (0-99)	ASPHALT CONCRETE FRICTION COURSE,TRAFFIC C, FC-12.5, HIGH POLYMER 0-99 TONS	TN	50		$0.00
0337 7 93 (100-199)	ASPHALT CONCRETE FRICTION COURSE,TRAFFIC C, FC-12.5, HIGH POLYMER 100-199 TONS	TN	150		$0.00
0337 7 93 (200-300)	ASPHALT CONCRETE FRICTION COURSE,TRAFFIC C, FC-12.5, HIGH POLYMER 200-300 TONS	TN	250		$0.00
0337 7 93 (300+)	ASPHALT CONCRETE FRICTION COURSE,TRAFFIC C, FC-12.5, HIGH POLYMER 300 TONS OR MORE	TN	350		$0.00
0337 7 94 (0-99)	ASPHALT CONCRETE FRICTION COURSE,TRAFFIC D, FC-12.5, HIGH POLYMER 0-99 TONS	TN	50		$0.00
0337 7 94 (100-199)	ASPHALT CONCRETE FRICTION COURSE,TRAFFIC D, FC-12.5, HIGH POLYMER 100-199 TONS	TN	150		$0.00
0337 7 94 (200-300)	ASPHALT CONCRETE FRICTION COURSE,TRAFFIC D, FC-12.5, HIGH POLYMER 200-300 TONS	TN	250		$0.00
0337 7 94 (300+)	ASPHALT CONCRETE FRICTION COURSE,TRAFFIC D, FC-12.5, HIGH POLYMER 300 TONS OR MORE	TN	350		$0.00
0339 1	MISCELLANEOUS ASPHALT PAVEMENT	TN	25		$0.00
0350 3 5	PLAIN CEMENT CONCRETE PAVEMENT, 8"	SY	100		$0.00
0350 3 9	PLAIN CEMENT CONCRETE PAVEMENT, 10"	SY	100		$0.00

0350 3 13	PLAIN CEMENT CONCRETE PAVEMENT, 12"	SY	100		$0.00
0350 5	CLEANING & SEALING JOINTS- CONCRETE PAVEMENT:	LF	100		$0.00
0350 30 13	CONCRETE PAVEMENT FOR ROUNDABOUT APRON, 12" DEPTH	SY	100		$0.00
0352 70	GRINDING CONCRETE PAVEMENT	SY	100		$0.00
0400 0 11	CONCRETE CLASS NS, GRAVITY WALL	CY	10		$0.00
0400 1 2	CONCRETE CLASS I, ENDWALLS	CY	10		$0.00
0400 1 11	CONCRETE CLASS I, RETAINING WALLS	CY	10		$0.00
0400 2 1	CONCRETE CLASS II, CULVERTS	CY	10		$0.00
0400 2 2	CONCRETE CLASS II, ENDWALLS	CY	10		$0.00
0400 2 5	CONCRETE CLASS II, BRIDGE SUBSTRUCTURE	CY	10		$0.00
0400 2 11	CONCRETE CLASS II, RETAINING WALLS	CY	10		$0.00
0400 3 1	CONCRETE CLASS III, CULVERTS	CY	10		$0.00
0400 3 8	CONCRETE CLASS III, BULKHEAD	CY	10		$0.00
0400 4 1	CONCRETE CLASS IV, CULVERTS	CY	10		$0.00
0400 4 2	CONCRETE CLASS IV, ENDWALLS	CY	10		$0.00
0400 4 5	CONCRETE CLASS IV, BRIDGE SUBSTRUCTURE	CY	10		$0.00
0400 4 11	CONC CLASS IV, RETAINING WALLS	CY	10		$0.00
0400 145	CLEANING CONCRETE SURFACE	SF	20		$0.00
0401 70 1	RESTORE SPALLED AREAS, EPOXY	CF	10		$0.00
0401 70 4	RESTORE SPALLED AREAS, PORTLAND CEMENT GROUT	CF	10		$0.00
0401 70 5	RESTORE SPALLED AREAS, CONTRACTORS OPTION	CF	10		$0.00
0411 1	EPOXY MATERIAL FOR CRACK INJECTION- STRUCTURES REHAB	GA	10		$0.00
0411 2	CRACKS INJECT & SEAL- STRUCTURES REHAB	LF	25		$0.00
413-149	PENETRANT SEALER	GA	10		$0.00
413-154	CLEANING & SEALING CONCRETE SURFACES- PENETRANT SEALER OR METHACRYLATES	SF	25		$0.00
0415 1 1	REINFORCING STEEL- ROADWAY	LB	100		$0.00
0415 1 3	REINFORCING STEEL- RETAINING WALL	LB	100		$0.00
0415 1 5	REINFORCING STEEL- BRIDGE SUBSTRUCTURE	LB	100		$0.00
0415 1 6	REINFORCING STEEL- MISCELLANEOUS	LB	100		$0.00

0415 1 8	REINFORCING STEEL- BULKHEAD	LB	100		$0.00
0425 1201	INLETS, CURB, TYPE 9, <10'	EA	3		$0.00
0425 1202	INLETS, CURB, TYPE 9, >10'	EA	3		$0.00
0425 1203	INLETS, CURB, TYPE 9, J BOT, <10'	EA	3		$0.00
0425 1204	INLETS, CURB, TYPE 9, J BOT, >10'	EA	3		$0.00
0425 1205	INLETS, CURB, TYPE 9, PARTIAL	EA	3		$0.00
0425 1209	INLETS, CURB, TYPE 9, MODIFY	EA	3		$0.00
0425 1211	INLETS, CURB, TYPE 10, <10'	EA	3		$0.00
0425 1212	INLETS, CURB, TYPE 10, >10'	EA	3		$0.00
0425 1213	INLETS, CURB, TYPE 10, J BOT <10'	EA	3		$0.00
0425 1214	INLETS, CURB, TYPE 10, J BOT >10'	EA	3		$0.00
0425 1215	INLETS, CURB, TYPE 10, PARTIAL	EA	3		$0.00
0425 1311	INLETS, CURB, TYPE P-1, <10'	EA	3		$0.00
0425 1312	INLETS, CURB TYPE P-1, >10'	EA	3		$0.00
0425 1315	INLETS, CURB TYPE P-1, PARTIAL	EA	3		$0.00
0425 1319	INLETS, CURB TYPE P-1, MODIFY	EA	3		$0.00
0425 1321	INLETS, CURB, TYPE P-2, <10'	EA	3		$0.00
0425 1322	INLETS, CURB, TYPE P-2, >10'	EA	3		$0.00
0425 1325	INLETS, CURB, TYPE P-2, PARTIAL	EA	3		$0.00
0425 1329	INLETS, CURB TYPE P-2, MODIFY	EA	3		$0.00
0425 1331	INLETS, CURB, TYPE P-3, <10'	EA	3		$0.00
0425 1332	INLETS, CURB. TYPE P-3, >10'	EA	3		$0.00
0425 1335	INLETS, CURB, TYPE P-3, PARTIAL	EA	3		$0.00
0425 1341	INLETS, CURB, TYPE P-4, <10'	EA	3		$0.00
0425 1342	INLETS, CURB, TYPE P-4, >10'	EA	3		$0.00
0425 1345	INLETS, CURB, TYPE P-4, PARTIAL	EA	3		$0.00
0425 1349	INLETS, CURB, TYPE P-4, MODIFY	EA	3		$0.00
0425 1351	INLETS, CURB, TYPE P-5, <10'	EA	3		$0.00
0425 1352	INLETS, CURB, TYPE P-5, >10'	EA	3		$0.00

0425 1355	INLETS, CURB, TYPE P-5, PARTIAL	EA	3		$0.00
0425 1359	INLETS, CURB, TYPE P-5, MODIFY	EA	3		$0.00
0425 1361	INLETS, CURB, TYPE P-6, <10'	EA	3		$0.00
0425 1362	INLETS, CURB, TYPE P-6, >10'	EA	3		$0.00
0425 1365	INLETS, CURB, TYPE P-6, PARTIAL	EA	3		$0.00
0425 1369	INLETS, CURB, TYPE P-6, MODIFY	EA	3		$0.00
0425 1411	INLETS, CURB TYPE J-1, <10'	EA	3		$0.00
0425 1412	INLETS, CURB, TYPE J-1, >10'	EA	3		$0.00
0425 1415	INLETS, CURB, TYPE J-1, PARTIAL	EA	3		$0.00
0425 1419	INLETS, CURB, TYPE J-1, MODIFY	EA	3		$0.00
0425 1421	INLETS, CURB, TYPE J-2, <10'	EA	3		$0.00
0425 1422	INLETS, CURB, TYPE J-2, >10'	EA	3		$0.00
0425 1425	INLETS, CURB, TYPE J-2, PARTIAL	EA	3		$0.00
0425 1429	INLETS, CURB, TYPE J-2, MODIFY	EA	3		$0.00
0425 1431	INLETS, CURB, TYPE J-3, <10'	EA	3		$0.00
0425 1432	INLETS, CURB, TYPE J-3, >10'	EA	3		$0.00
0425 1435	INLETS, CURB, TYPE J-3, PARTIAL	EA	3		$0.00
0425 1441	INLETS, CURB, TYPE J-4, <10'	EA	3		$0.00
0425 1442	INLETS, CURB, TYPE J-4, >10'	EA	3		$0.00
0425 1445	INLETS, CURB, TYPE J-4, PARTIAL	EA	3		$0.00
0425 1451	INLETS, CURB, TYPE J-5, <10'	EA	3		$0.00
0425 1452	INLETS, CURB, TYPE J-5, >10'	EA	3		$0.00
0425 1455	INLETS, CURB, TYPE J-5, PARTIAL	EA	3		$0.00
0425 1459	INLETS, CURB, TYPE J-5, MODIFY	EA	3		$0.00
0425 1461	INLETS, CURB, TYPE J-6, <10'	EA	3		$0.00
0425 1462	INLETS, CURB, TYPE J-6, >10'	EA	3		$0.00
0425 1465	INLETS, CURB, TYPE J-6, PARTIAL	EA	3		$0.00
0425 1469	INLETS, CURB, TYPE J-6, MODIFY	EA	3		$0.00
0425 1471	INLETS, CURB, TYPE 7, <10'	EA	3		$0.00

0425 1472	INLETS, CURB, TYPE 7, >10'	EA	3		$0.00
0425 1473	INLETS, CURB, TYPE 7, J BOT , <10'	EA	3		$0.00
0425 1474	INLETS, CURB, TYPE 7, J BOT ,>10'	EA	3		$0.00
0425 1475	INLETS, CURB, TYPE 7, PARTIAL	EA	3		$0.00
0425 1479	INLETS, CURB, TYPE 7, MODIFY	EA	3		$0.00
0425 1481	INLETS, CURB, TYPE 8, <10'	EA	3		$0.00
0425 1483	INLETS, CURB, TYPE 8, J BOT , <10'	EA	3		$0.00
0425 1484	INLETS, CURB, TYPE 8, J BOT ,>10'	EA	3		$0.00
0425 1485	INLETS, CURB, TYPE 8, PARTIAL	EA	3		$0.00
0425 1489	INLETS, CURB, TYPE 8, MODIFY	EA	3		$0.00
0425 1501	INLETS, DT BOT, TYPE A, <10'	EA	3		$0.00
0425 1502	INLETS, DT BOT, TYPE A, >10'	EA	3		$0.00
0425 1503	INLETS, DT BOT, TYPE A, J BOT, <10'	EA	3		$0.00
0425 1504	INLETS, DT BOT, TYPE A, J BOT, >10'	EA	3		$0.00
0425 1505	INLETS, DT BOT, TYPE A, PARTIAL	EA	3		$0.00
0425 1511	INLETS, DT BOT, TYPE B, <10'	EA	3		$0.00
0425 1512	INLETS, DT BOT, TYPE B, >10'	EA	3		$0.00
0425 1513	INLETS, DT BOT, TYPE B, J BOT, <10'	EA	3		$0.00
0425 1514	INLETS, DT BOT, TYPE B, J BOT, >10'	EA	3		$0.00
0425 1515	INLETS, DT BOT, TYPE B, PARTIAL	EA	3		$0.00
0425 1519	INLETS, DT BOT, TYPE B, MODIFY	EA	3		$0.00
0425 1521	INLETS, DT BOT, TYPE C,<10'	EA	3		$0.00
0425 1522	INLETS, DT BOT, TYPE C,>10'	EA	3		$0.00
0425 1523	INLETS, DT BOT, TYPE C,JBOT, <10'	EA	3		$0.00
0425 1524	INLETS, DT BOT, TYPE C, JBOT, >10'	EA	3		$0.00
0425 1525	INLETS, DITCH BOTTOM, TYPE C, PARTIAL	EA	3		$0.00
0425 1529	INLETS, DT BOT, TYPE C, MODIFY	EA	3		$0.00
0425 1531	INLETS, DITCH BOTTOM, TYPE C MODIFIED- BACK OF SIDEWALK, <10'	EA	3		$0.00
0425 1532	INLETS, DITCH BOTTOM, TYPE C MODIFIED- BACK OF SIDEWALK, >10'	EA	3		$0.00

0425 1533	INLETS, DITCH BOTTOM TYPE C MODIFIED- BACK OF SIDEWALK, J BOT, <10'	EA	3		$0.00
0425 1534	INLETS, DITCH BOTTOM, TYPE C MODIFIED- BACK OF SIDEWALK, J BOT, >10'	EA	3		$0.00
0425 1535	INLETS, DITCH BOTTOM TYPE C MODIFIED- BACK OF SIDEWALK, PARTIAL	EA	3		$0.00
0425 1541	INLETS, DT BOT, TYPE D, <10'	EA	3		$0.00
0425 1542	INLETS, DT BOT, TYPE D, >10'	EA	3		$0.00
0425 1543	INLETS, DITCH BOTTOM, TYPE D, J BOT, <10'	EA	3		$0.00
0425 1544	INLETS, DITCH BOTTOM, TYPE D, J BOT, >10'	EA	3		$0.00
0425 1545	INLETS, DITCH BOTTOM, TYPE D, PARTIAL	EA	3		$0.00
0425 1549	INLETS, DT BOT, TYPE D, MODIFY	EA	3		$0.00
0425 1551	INLETS, DT BOT, TYPE E, <10'	EA	3		$0.00
0425 1552	INLETS, DT BOT, TYPE E, >10'	EA	3		$0.00
0425 1553	INLETS, DT BOT, TYPE E, J BOT, <10'	EA	3		$0.00
0425 1554	INLETS, DT BOT, TYPE E, J BOT, >10'	EA	3		$0.00
0425 1555	INLETS, DT BOT, TYPE E, PARTIAL	EA	3		$0.00
0425 1559	INLETS, DT BOT, TYPE E, MODIFY	EA	3		$0.00
0425 1561	INLETS, DT BOT, TYPE F, <10'	EA	3		$0.00
0425 1562	INLETS, DT BOT, TYPE F, >10'	EA	3		$0.00
0425 1563	INLETS, DITCH BOTTOM, TYPE F, J BOT, <10'	EA	3		$0.00
0425 1564	INLETS, DITCH BOTTOM, TYPE F, J BOT, >10'	EA	3		$0.00
0425 1565	INLETS, DITCH BOTTOM, TYPE F, PARTIAL	EA	3		$0.00
0425 1569	INLETS, DITCH BOTTOM, TYPE F, MODIFY	EA	3		$0.00
0425 1571	INLETS, DITCH BOTTOM, TYPE G, <10'	EA	3		$0.00
0425 1572	INLETS, DITCH BOTTOM, TYPE G, >10'	EA	3		$0.00
0425 1573	INLETS, DITCH BOTTOM, TYPE G, J BOT, <10'	EA	3		$0.00
0425 1574	INLETS, DITCH BOTTOM, TYPE G, J BOT, >10'	EA	3		$0.00
0425 1575	INLETS, DITCH BOTTOM, TYPE G, PARTIAL	EA	3		$0.00
0425 1579	INLETS, DITCH BOTTOM, TYPE G, MODIFY	EA	3		$0.00
0425 1581	INLETS, DT BOT, TYPE H, <10'	EA	3		$0.00
0425 1582	INLETS, DT BOT, TYPE H, >10'	EA	3		$0.00

0425 1583	INLETS, DT BOT, TYPE H, J BOTTOM <10'	EA	3		$0.00
0425 1584	INLETS, DT BOT, TYPE H, J BOTTOM >10'	EA	3		$0.00
0425 1585	INLETS, DT BOT, TYPE H, PARTIAL	EA	3		$0.00
0425 1589	INLETS, DT BOT, TYPE H, MODIFY	EA	3		$0.00
0425 1601	INLETS, DT BOT, TYPE J, <10'	EA	3		$0.00
0425 1602	INLETS, DT BOT, TYPE J, >10'	EA	3		$0.00
0425 1603	INLETS, DT BOT, TYPE J, J BOT, <10'	EA	3		$0.00
0425 1604	INLETS, DT BOT, TYPE J, JBOT,>10'	EA	3		$0.00
0425 1605	INLETS, DT BOT, TYPE J, PARTIAL	EA	3		$0.00
0425 1609	INLETS, DT BOT, TYPE J, MODIFY	EA	3		$0.00
0425 1611	INLETS, DITCH BOTTOM, TYPE K, <10'	EA	3		$0.00
0425 1619	INLETS, DITCH BOTTOM, TYPE K, J BOTTOM, MODIFY	EA	3		$0.00
0425 1701	INLETS, GUTTER, TYPE S, <10'	EA	3		$0.00
0425 1702	INLETS, GUTTER, TYPE S, >10'	EA	3		$0.00
0425 1703	INLETS, GUTTER, TYPE S, J BOTTOM <10'	EA	3		$0.00
0425 1704	INLETS, GUTTER, TYPE S, J BOTTOM, >10'	EA	3		$0.00
0425 1705	INLETS, GUTTER, TYPE S, PARTIAL	EA	3		$0.00
0425 1711	INLETS, GUTTER, TYPE V, <10'	EA	3		$0.00
0425 1712	INLETS, GUTTER, TYPE V, >10'	EA	3		$0.00
0425 1713	INLETS, GUTTER, TYPE V, J BOT, <10'	EA	3		$0.00
0425 1714	INLETS, GUTTER, TYPE V, J BOTTOM, >10'	EA	3		$0.00
0425 1715	INLETS, GUTTER, TYPE V, PARTIAL	EA	3		$0.00
0425 1719	INLETS, GUTTER, TYPE V, MODIFY	EA	3		$0.00
0425 1910	INLETS, CLOSED FLUME	EA	3		$0.00
0425 2 41	MANHOLES, P-7, <10'	EA	3		$0.00
0425 2 42	MANHOLES, P-7, >10'	EA	3		$0.00
0425 2 43	MANHOLES, P-7, PARTIAL	EA	3		$0.00
0425 2 61	MANHOLES, P-8, <10'	EA	3		$0.00
0425 2 62	MANHOLES, P-8, >10'	EA	3		$0.00

0425 2 63	MANHOLES, P-8, PARTIAL	EA	3		$0.00
0425 2 71	MANHOLES, J-7, <10'	EA	3		$0.00
0425 2 72	MANHOLES, J-7, >10'	EA	3		$0.00
0425 2 73	MANHOLES, J-7, PARTIAL	EA	3		$0.00
0425 2 91	MANHOLES, J-8, <10'	EA	3		$0.00
0425 2 92	MANHOLES, J-8, >10'	EA	3		$0.00
0425 2 93	MANHOLES, J-8, PARTIAL	EA	3		$0.00
0425 2110	MANHOLES, REPAIR	EA	3		$0.00
0425 3 41	JUNCTION BOX, DRAINAGE, P-7, <10'	EA	3		$0.00
0425 3 42	JUNCTION BOXES, P-7, >10'	EA	3		$0.00
0425 3 43	JUNCTION BOX, DRAINAGE, P-7, PARTIAL	EA	3		$0.00
0425 3 50	JUNCTION BOX, DRAINAGE, REPAIR	EA	3		$0.00
0425 3 61	JUNCTION BOXES, J-7, <10'	EA	3		$0.00
0425 3 62	JUNCTION BOXES, J-7, >10'	EA	3		$0.00
0425 3 63	JUNCTION BOXES, DRAINAGE, J-7, PARTIAL	EA	3		$0.00
0425 4	INLETS, ADJUST	EA	3		$0.00
0425 5	MANHOLE, ADJUST	EA	3		$0.00
0425 6	VALVE BOXES, ADJUST	EA	3		$0.00
0425 7	MANHOLE COVER- REPLACE	EA	3		$0.00
0425 8	DRAINAGE STRUCTURES, MISCELLANEOUS, ADJUST	EA	3		$0.00
0425 11	MODIFY EXISTING DRAINAGE STRUCTURE	EA	3		$0.00
0425 14 1	GRATE FOR EXISTING DRAINAGE STRUCTURE, FURNISH AND INSTALL	SF	3		$0.00
0425 15 41	INLET TOP, REPAIR, CURB INLET	EA	3		$0.00
0425 15 42	INLET TOP, REPAIR, DITCH BOTTOM INLET	EA	3		$0.00
0425 15 51	INLET TOP, REPLACE, CURB INLET	EA	3		$0.00
0425 15 52	INLET TOP, REPLACE, DITCH BOTTOM INLET	EA	3		$0.00
0425 16 11	DRAINAGE MANHOLE- REPLACE TOP AND RIM	EA	3		$0.00
0425 82	REPLACE GRATE	EA	3		$0.00
0430 94 1	DESILTING PIPE, 0 - 24"	LF	50		$0.00

0430 94 2	DESILTING PIPE, 25 - 36"	LF	50		$0.00
430173112	PIPE CULVERT OPTIONAL MATERIAL, ROUND, 12", GUTTER DRAIN	LF	50		$0.00
430173115	PIPE CULVERT OPTIONAL MATERIAL, ROUND, 15", GUTTER DRAIN	LF	50		$0.00
430173118	PIPE CULVERT OPTIONAL MATERIAL, ROUND, 18", GUTTER DRAIN	LF	50		$0.00
430173124	PIPE CULVERT OPTIONAL MATERIAL, ROUND, 24", GUTTER DRAIN	LF	50		$0.00
430173130	PIPE CULVERT OPTIONAL MATERIAL, ROUND, 30", GUTTER DRAIN	LF	50		$0.00
430173136	PIPE CULVERT OPTIONAL MATERIAL, ROUND, 36", GUTTER DRAIN	LF	50		$0.00
430173142	PIPE CULVERT, OPTIONAL MATERIAL, ROUND, 42", GUTTER DRAIN	LF	50		$0.00
430173148	PIPE CULVERT, OPTIONAL MATERIAL, ROUND, 48" GUTTER DRAIN	LF	50		$0.00
430173218	PIPE CULVERT OPTIONAL MATERIAL, OTHER/ELLIPTICAL, 18", GUTTER DRAIN	LF	50		$0.00
430174112	PIPE CULVERT, OPTIONAL MATERIAL, ROUND, 12"SD	LF	50		$0.00
430174115	PIPE CULVERT, OPTIONAL MATERIAL, ROUND, 15"SD	LF	50		$0.00
430174118	PIPE CULVERT, OPTIONAL MATERIAL, ROUND, 18"SD	LF	50		$0.00
430174124	PIPE CULVERT, OPTIONAL MATERIAL, ROUND, 24"SD	LF	50		$0.00
430174130	PIPE CULVERT, OPTIONAL MATERIAL, ROUND, 30"SD	LF	50		$0.00
430174142	PIPE CULVERT, OPTIONAL MATERIAL, ROUND, 42"SD	LF	50		$0.00
430174148	PIPE CULVERT, OPTIONAL MATERIAL, ROUND, 48"SD	LF	50		$0.00
430174154	PIPE CULVERT, OPTIONAL MATERIAL, ROUND, 54"SD	LF	50		$0.00
430174160	PIPE CULVERT, OPTIONAL MATERIAL, ROUND, 60"SD	LF	50		$0.00
430174172	PIPE CULVERT, OPTIONAL MATERIAL, ROUND, 72"SD	LF	50		$0.00
430174215	PIPE CULVERT, OPTIONAL MATERIAL, OTHER SHAPE - ELLIP/ARCH, 15"SD	LF	50		$0.00
430174218	PIPE CULVERT, OPTIONAL MATERIAL, OTHER SHAPE - ELLIP/ARCH, 18"SD	LF	50		$0.00
430174224	PIPE CULVERT, OPTIONAL MATERIAL, OTHER SHAPE - ELLIP/ARCH, 24"SD	LF	50		$0.00
430174230	PIPE CULVERT, OPTIONAL MATERIAL, OTHER SHAPE - ELLIP/ARCH, 30"SD	LF	50		$0.00
430174236	PIPE CULVERT, OPTIONAL MATERIAL, OTHER SHAPE - ELLIP/ARCH, 36"SD	LF	50		$0.00
430174242	PIPE CULVERT, OPTIONAL MATERIAL, ELLIP/OTHER, 42"SD	LF	50		$0.00
430174248	PIPE CULVERT,OPTIONAL MATERIAL,OTHER-ELIP/ARCH, 48"SD	LF	50		$0.00
430175112	PIPE CULVERT,OPTIONAL MATERIAL,ROUND, 12"S/CD	LF	50		$0.00
430175115	PIPE CULVERT,OPTIONAL MATERIAL,ROUND, 15"S/CD	LF	50		$0.00

430175118	PIPE CULVERT, OPTIONAL MATERIAL, ROUND, 18"S/CD	LF	250		$0.00
430175124	PIPE CULVERT, OPTIONAL MATERIAL, ROUND, 24"S/CD	LF	50		$0.00
430175130	PIPE CULVERT, OPT MATERIAL, ROUND, 30"S/CD	LF	50		$0.00
430175136	PIPE CULVERT, OPT MATERIAL, ROUND, 36"S/CD	LF	50		$0.00
430175140	PIPE CULVERT, OPT MATERIAL, ROUND, 40"S/CD	LF	50		$0.00
430175142	PIPE CULVERT, OPT MATERIAL, ROUND, 42"S/CD	LF	50		$0.00
430175148	PIPE CULVERT, OPT MATERIAL, ROUND, 48"S/CD	LF	50		$0.00
430175154	PIPE CULVERT, OPT MATERIAL, ROUND, 54"S/CD	LF	50		$0.00
430175160	PIPE CULVERT, OPT MATERIAL, ROUND, 60"S/CD	LF	50		$0.00
430175166	PIPE CULVERT, OPT MATERIAL, ROUND, 66"S/CD	LF	50		$0.00
430175172	PIPE CULVERT, OPT MATERIAL, ROUND, 72"S/CD	LF	50		$0.00
430175178	PIPE CULVERT, OPT MATERIAL, ROUND, 78" STORM/CROSS DRAIN	LF	50		$0.00
430175184	PIPE CULVERT, OPT MATERIAL, ROUND, 84"S/CD	LF	50		$0.00
430175196	PIPE CULVERT, OPT MATERIAL, ROUND, 96"S/CD	LF	50		$0.00
430175215	PIPE CULVERT,OPTIONAL MATERIAL,OTHER-ELIP/ARCH, 15"S/CD	LF	50		$0.00
430175218	PIPE CULVERT,OPTIONAL MATERIAL,OTHER-ELIP/ARCH, 18"S/CD	LF	50		$0.00
430175224	PIPE CULVERT,OPTIONAL MATERIAL,OTHER SHAPE-ELIP/ARCH, 24"S/CD	LF	50		$0.00
430175230	PIPE CULVERT, OPT MATERIAL, OTHER SHAPE - ELIP/ARCH, 30"S/CD	LF	50		$0.00
430175236	PIPE CULVERT, OPT MATERIAL, OTHER SHAPE - ELIP/ARCH, 36"S/CD	LF	50		$0.00
430175242	PIPE CULVERT, OPT MATERIAL, OTHER SHAPE - ELIP/ARCH, 42"S/CD	LF	50		$0.00
430175248	PIPE CULVERT, OPT MATERIAL, OTHER SHAPE - ELIP/ARCH, 48"S/CD	LF	50		$0.00
430175254	PIPE CULVERT, OPT MATERIAL, OTHER SHAPE - ELIP/ARCH, 54"S/CD	LF	50		$0.00
430175260	PIPE CULVERT, OPT MATERIAL, OTHER SHAPE - ELIP/ARCH, 60"S/CD	LF	50		$0.00
430175266	PIPE CULVERT, OPT MATERIAL, OTHER SHAPE - ELIP/ARCH, 66"S/CD	LF	50		$0.00
430175272	PIPE CULVERT, OPT MATERIAL, OTHER SHAPE - ELIP/ARCH, 72"S/CD	LF	50		$0.00
430175299	PIPE CULVERT,OPTIONAL MATERIAL,OTHER SHAPE-ELIP/ARCH, 99" OR >, S/CD	LF	50		$0.00
430185118	PIPE CULVERT,OPTIONAL MATERIAL,ROUND, JACK & BORE, 18" , STORM AND CROSS DRAIN	LF	50		$0.00
430185124	PIPE CULVERT,OPTIONAL MATERIAL,ROUND, JACK & BORE, 24", STORM AND CROSS DRAIN	LF	50		$0.00
430185130	PIPE CULVERT,OPTIONAL MATERIAL,ROUND, JACK & BORE, 30", STORM AND CROSS DRAIN	LF	50		$0.00

430185136	PIPE CULVERT,OPTIONAL MATERIAL,ROUND, JACK & BORE, 36", STORM AND CROSS DRAIN	LF	50		$0.00
430185142	PIPE CULVERT,OPTIONAL MATERIAL,ROUND, JACK & BORE, 42", STORM AND CROSS DRAIN	LF	50		$0.00
430185148	PIPE CULVERT,OPTIONAL MATERIAL,ROUND, JACK & BORE, 48", STORM AND CROSS DRAIN	LF	50		$0.00
430185154	PIPE CULVERT,OPTIONAL MATERIAL,ROUND, JACK & BORE, 54", STORM AND CROSS DRAIN	LF	50		$0.00
430185160	PIPE CULVERT,OPTIONAL MATERIAL,ROUND, JACK & BORE, 60" , STORM AND CROSS DRAIN	LF	50		$0.00
430185166	PIPE CULVERT,OPTIONAL MATERIAL,ROUND, JACK & BORE, 66" , STORM AND CROSS DRAIN	LF	50		$0.00
430185178	PIPE CULVERT,OPTIONAL MATERIAL,ROUND, JACK & BORE, 78" , STORM AND CROSS DRAIN	LF	50		$0.00
0430200 21	FLARED END SECTION, CONCRETE, 12"	EA	3		$0.00
0430200 23	FLARED END SECTION, CONCRETE, 15"	EA	3		$0.00
0430200 25	FLARED END SECTION, CONCRETE, 18"	EA	3		$0.00
0430200 29	FLARED END SECTION, CONCRETE, 24"	EA	3		$0.00
0430200 33	FLARED END SECTION, CONCRETE, 30"	EA	3		$0.00
0430200 38	FLARED END SECTION, CONCRETE, 36"	EA	3		$0.00
0430200 40	FLARED END SECTION, CONCRETE, 42"	EA	3		$0.00
0430200 41	FLARED END SECTION, CONCRETE, 48"	EA	3		$0.00
0430200 42	FLARED END SECTION, CONCRETE, 54"	EA	3		$0.00
0430200 43	FLARED END SECTION, CONCRETE, 60"	EA	3		$0.00
0430200 44	FLARED END SECTION, CONCRETE, 66"	EA	3		$0.00
0430200 45	FLARED END SECTION, CONCRETE, 72"	EA	3		$0.00
430600025	U-ENDWALL, STD 260, 1:6 SLOPE, 18"PIPE	EA	3		$0.00
430600125	U-ENDWALL, STD 260, 1:4 SLOPE, 18"PIPE	EA	3		$0.00
430602123	U-ENDWALL, WITH GRATE,STD INDEX 260, 1:4 SLOPE, 15"	EA	3		$0.00
430602125	U-ENDWALL, WITH GRATE,STD 260, 1:4 SLOPE, 18"	EA	3		$0.00
430602129	U-ENDWALL, WITH GRATE,STD 260, 1:4 SLOPE, 24"	EA	3		$0.00
430602133	U-ENDWALL, WITH GRATE,STD INDEX 260, 1:4 SLOPE, 30"	EA	3		$0.00
430610025	U-ENDWALL, STD 261, 1:6 SLOPE, 18"PIPE	EA	3		$0.00
430610029	U-ENDWALL, STD 261, 1:6 SLOPE, 24"PIPE	EA	3		$0.00
430610033	U-ENDWALL, STD 261, 1:6 SLOPE, 30"PIPE	EA	3		$0.00
430610123	U-ENDWALL, STD 261, 1:4 SLOPE, 15"PIPE	EA	3		$0.00

430610125	U-ENDWALL, STD 261, 1:4 SLOPE, 18"PIPE	EA	3		$0.00
430610129	U-ENDWALL, STD 261, 1:4 SLOPE, 24"PIPE	EA	3		$0.00
430610133	U-ENDWALL, STD 261, 1:4 SLOPE, 30"PIPE	EA	3		$0.00
430610223	U-ENDWALL, STD 261, 1:3 SLOPE, 15"PIPE	EA	3		$0.00
430610225	U-ENDWALL, STD 261, 1:3 SLOPE, 18"PIPE	EA	3		$0.00
430610229	U-ENDWALL, STD 261, 1:3 SLOPE, 24"PIPE	EA	3		$0.00
430610233	U-ENDWALL, STD 261, 1:3 SLOPE, 30"PIPE	EA	3		$0.00
430610323	U-ENDWALL, STD 261, 1:2 SLOPE, 15"PIPE	EA	3		$0.00
430610325	U-ENDWALL, STD 261, 1:2 SLOPE, 18"PIPE	EA	3		$0.00
430610329	U-ENDWALL, STD 261,1:2 SLOPE, 24"PIPE	EA	3		$0.00
430611023	U-ENDWALL, STD 261, BAFFLES, 1:6 SLOPE, 15"PIPE	EA	3		$0.00
430611025	U-ENDWALL, STD 261, BAFFLES, 1:6 SLOPE, 18"PIPE	EA	3		$0.00
430611029	U-ENDWALL, STD 261, BAFFLES, 1:6 SLOPE, 24"PIPE	EA	3		$0.00
430611033	U-ENDWALL, STD 261, BAFFLES, 1:6 SLOPE, 30"PIPE	EA	3		$0.00
430611123	U-ENDWALL WITH BAFFLES, STD 261, 1:4 SLOPE, 15"PIPE	EA	3		$0.00
430611125	U-ENDWALL WITH BAFFLES, STD 261, 1:4 SLOPE, 18"PIPE	EA	3		$0.00
430611129	U-ENDWALL WITH BAFFLES, STD 261, 1:4 SLOPE, 24"PIPE	EA	3		$0.00
430611133	U-ENDWALL WITH BAFFLES,STD 261,1:4 SLOPE,30"PIPE	EA	3		$0.00
430611223	U-ENDWALL WITH BAFFLES, STD 261, 1:3 SLOPE, 15"PIPE	EA	3		$0.00
430611225	U-ENDWALL WITH BAFFLES, STD 261, 1:3 SLOPE, 18"PIPE	EA	3		$0.00
430611229	U-ENDWALL WITH BAFFLES, STD 261, 1:3 SLOPE, 24"PIPE	EA	3		$0.00
430611233	U-ENDWALL, STD 261, BAFFLES, 1:3 SLOPE, 30"PIPE	EA	3		$0.00
430611323	U-ENDWALL WITH BAFFLES, STD 261, 1:2 SLOPE, 15"PIPE	EA	3		$0.00
430611325	U-ENDWALL WITH BAFFLES, STD 261, 1:2 SLOPE, 18"PIPE	EA	3		$0.00
430611329	U-ENDWALL WITH BAFFLES, STD 261, 1:2 SLOPE, 24"PIPE	EA	3		$0.00
430611333	U-ENDWALL, BAFFLES, STD 261, 1:2 SLOPE, 30"PIPE	EA	3		$0.00
430612023	U-ENDWALL WITH GRATE, STD 261, 1:6 SLOPE, 15"	EA	3		$0.00
430612025	U-ENDWALL WITH GRATE, STD 261, 1:6 SLOPE, 18"PIPE	EA	3		$0.00
430612029	U-ENDWALL WITH GRATE, STD 261, 1:6 SLOPE, 24"PIPE	EA	3		$0.00

430612033	U-ENDWALL WITH GRATE, STD 261, 1:6 SLOPE, 30"	EA	3		$0.00
430612125	U-ENDWALL WITH GRATE, STD 261, 1:4 SLOPE, 18"PIPE	EA	3		$0.00
430612129	U-ENDWALL WITH GRATE, STD 261, 1:4 SLOPE, 24"PIPE	EA	3		$0.00
430612133	U-ENDWALL, GRATE, STD 261, 1:4 SLOPE, 30" PIPE	EA	3		$0.00
430612329	U-ENDWALL WITH GRATE, STD 261, 1:2 SLOPE, 24"PIPE	EA	3		$0.00
430612333	U-ENDWALL, GRATE, STD 261, 1:2 SLOPE, 30" PIPE	EA	3		$0.00
430613025	U-ENDWALL, WITH BAFFLES & GRATE, STD 261,1:6 SLOPE, 18"	EA	3		$0.00
430613029	U-ENDWALL, WITH BAFFLES & GRATE, STD 261,1:6 SLOPE, 24"PIPE	EA	3		$0.00
430613033	U-ENDWALL, WITH BAFFLES & GRATE, STD 261,1:6 SLOPE, 30"	EA	3		$0.00
430613123	U-ENDWALL, WITH BAFFLES & GRATE, STD 261,1:4 SLOPE,15"PIPE	EA	3		$0.00
430613125	U-ENDWALL, WITH BAFFLES & GRATE, STD 261,1:4 SLOPE,18"PIPE	EA	3		$0.00
430613129	U-ENDWALL, WITH BAFFLES & GRATE, STD 261,1:4 SLOPE, 24"PIPE	EA	3		$0.00
430613133	U-ENDWALL, WITH BAFFLES & GRATE, STD 261,1:4 SLOPE,30"PIPE	EA	3		$0.00
430613225	U-ENDWALL, WITH BAFFLES & GRATE, STD 261,1:3 SLOPE,18"PIPE	EA	3		$0.00
430613229	U-ENDWALL, WITH BAFFLES & GRATE, STD 261,1:3 SLOPE, 24 "PIPE	EA	3		$0.00
430613233	U-ENDWALL, WITH BAFFLES & GRATE, STD 261,1:3 SLOPE,30"PIPE	EA	3		$0.00
430613325	U-ENDWALL, WITH BAFFLES & GRATE, STD 261,1:2 SLOPE,18"PIPE	EA	3		$0.00
430613333	U-ENDWALL, WITH BAFFLES & GRATE, STD 261,1:2 SLOPE,30"PIPE	EA	3		$0.00
430830	PIPE FILLING AND PLUGGING- PLACE OUT OF SERVICE	CY	20		$0.00
430950	DESILTING CONCRETE BOX CULVERT	CY	20		$0.00
0430963 1	PVC PIPE FOR BACK OF SIDEWALK, 4"	LF	50		$0.00
430982120	MITERED END SECTION, OPTIONAL ROUND, 8" CD	EA	3		$0.00
430982121	MITERED END SECTION, OPTIONAL ROUND, 12" CD	EA	3		$0.00
430982123	MITERED END SECTION, OPTIONAL ROUND, 15" CD	EA	3		$0.00
430982125	MITERED END SECTION, OPTIONAL ROUND, 18" CD	EA	3		$0.00
430982129	MITERED END SECTION, OPTIONAL ROUND, 24" CD	EA	3		$0.00
430982133	MITERED END SECTION, OPTIONAL ROUND, 30" CD	EA	3		$0.00
430982138	MITERED END SECTION, OPTIONAL ROUND, 36" CD	EA	3		$0.00
430982140	MITERED END SECTION, OPTIONAL ROUND, 42" CD	EA	3		$0.00

430982141	MITERED END SECTION, OPTIONAL ROUND, 48" CD	EA	3		$0.00
430982142	MITERED END SECTION, OPTIONAL ROUND, 54" CD	EA	3		$0.00
430982143	MITERED END SECTION, OPTIONAL ROUND, 60" CD	EA	3		$0.00
430982144	MITERED END SECTION, OPTIONAL ROUND, 66" CD	EA	3		$0.00
430982145	MITERED END SECTION, OPTIONAL ROUND, 72" CD	EA	3		$0.00
430982147	MITERED END SECTION, OPTIONAL ROUND, 84" CD	EA	3		$0.00
430982623	MITERED END SECTION, OPTIONAL - ELLIPTICAL / ARCH, 15" CD	EA	3		$0.00
430982625	MITERED END SECTION, OPTIONAL - ELLIPTICAL / ARCH, 18" CD	EA	3		$0.00
430982629	MITERED END SECTION, OPTIONAL - ELLIPTICAL / ARCH, 24" CD	EA	3		$0.00
430982633	MITERED END SECTION, OPTIONAL - ELLIPTICAL / ARCH, 30" CD	EA	3		$0.00
430982638	MITERED END SECTION, OPTIONAL - ELLIPTICAL / ARCH, 36" CD	EA	3		$0.00
430982640	MITERED END SECTION, OPTIONAL - ELLIPTICAL / ARCH, 42" CD	EA	3		$0.00
430982641	MITERED END SECTION, OPTIONAL - ELLIPTICAL / ARCH, 48" CD	EA	3		$0.00
430982642	MITERED END SECTION, OPTIONAL - ELLIPTICAL / ARCH, 54" CD	EA	3		$0.00
430982643	MITERED END SECTION, OPTIONAL - ELLIPTICAL / ARCH, 60" CD	EA	3		$0.00
430982645	MITERED END SECTION, OPTIONAL - ELLIPTICAL / ARCH, 72" CD	EA	3		$0.00
430984120	MITERED END SECTION, OPTIONAL ROUND, 8" SD	EA	3		$0.00
430984121	MITERED END SECTION, OPTIONAL ROUND, 12" SD	EA	3		$0.00
430984123	MITERED END SECTION, OPTIONAL ROUND, 15" SD	EA	3		$0.00
430984125	MITERED END SECTION, OPTIONAL ROUND, 18" SD	EA	3		$0.00
430984129	MITERED END SECTION, OPTIONAL ROUND, 24" SD	EA	3		$0.00
430984133	MITERED END SECTION , OPTIONAL ROUND, 30" SD	EA	3		$0.00
430984138	MITERED END SECTION , OPTIONAL ROUND, 36" SIDE DRAIN	EA	3		$0.00
430984140	MITERED END SECTION , OPTIONAL ROUND, 42" SD	EA	3		$0.00
430984141	MITERED END SECTION , OPTIONAL ROUND, 48" SD	EA	3		$0.00
430984142	MITERED END SECTION , OPTIONAL ROUND, 54" SD	EA	3		$0.00
430984143	MITERED END SECTION , OPTIONAL ROUND, 60" SD	EA	3		$0.00
430984144	MITERED END SECTION, OPTIONAL ROUND, 66" SIDE DRAIN	EA	3		$0.00
430984145	MITERED END SECTION, OPTIONAL ROUND, 72" SIDE DRAIN	EA	3		$0.00

430984147	MITERED END SECTION, OPTIONAL ROUND, 84" SD	EA	3		$0.00
430984623	MITERED END SECTION, OPTIONAL OTHER - ELLIP/ARCH, 15" SD	EA	3		$0.00
430984625	MITERED END SECT, OPTIONAL - ELLIPTICAL / ARCH, 18" SD	EA	3		$0.00
430984629	MITERED END SECT, OPTIONAL - ELLIPTICAL / ARCH, 24" SD	EA	3		$0.00
430984633	MITERED END SECT, OPTIONAL /ELLIP/ARCH, 30" SD	EA	3		$0.00
430984638	MITERED END SECT, OPTIONAL /ELLIP/ARCH, 36" SD	EA	3		$0.00
430984640	MITERED END SECT, OPTIONAL /ELLIP/ARCH, 42" SD	EA	3		$0.00
430984641	MITERED END SECT, OPTIONAL /ELLIP/ARCH, 48" SD	EA	3		$0.00
430984642	MITERED END SECT, OPTIONAL /ELLIP/ARCH, 54" SD	EA	3		$0.00
430984643	MITERED END SECTION, OPTIONAL SHAPE /ELLIP/ARCH, 60" SIDE DRAIN	EA	3		$0.00
430984644	MITERED END SECT, OPTIONAL /ELLIP/ARCH, 66" SD	EA	3		$0.00
430984645	MITERED END SECT, OPTIONAL /ELLIP/ARCH, 72" SD	EA	3		$0.00
430990	MITERED END SECT, REPLACE GRATE	EA	3		$0.00
0431 1 1	PIPE LINER, OPTIONAL MATERIAL, 0-24"	LF	50		$0.00
0431 1 2	PIPE LINER, OPTIONAL MATERIAL, 25-36"	LF	50		$0.00
0431 1 3	PIPE LINER, OPTIONAL MATERIAL, 37-48"	LF	50		$0.00
0431 1 4	PIPE LINER, OPTIONAL MATERIAL, 49 - 60"	LF	50		$0.00
0431 1 5	PIPE LINER, OPTIONAL MATERIAL, 61" AND GREATER	LF	50		$0.00
0436 1 1	TRENCH DRAIN, STANDARD	LF	50		$0.00
0440 1 10	UNDERDRAIN, TYPE I	LF	50		$0.00
0440 1 20	UNDERDRAIN, TYPE II	LF	50		$0.00
0440 1 30	UNDERDRAIN, TYPE III	LF	50		$0.00
0440 1 50	UNDERDRAIN, TYPE V	LF	50		$0.00
0440 70	UNDERDRAIN INSPECTION BOX	EA	5		$0.00
0440 73 1	UNDERDRAIN OUTLET PIPE, 4"	LF	50		$0.00
0440 73 2	UNDERDRAIN OUTLET PIPE, 6"	LF	50		$0.00
0440 73 3	UNDERDRAIN OUTLET PIPE, 8"	LF	50		$0.00
0440 73 4	UNDERDRAIN OUTLET PIPE, 10"	LF	50		$0.00
0440 73 5	UNDERDRAIN OUTLET PIPE, 12"	LF	50		$0.00

0443 70 3	FRENCH DRAIN, 18"	LF	50		$0.00
0443 70 4	FRENCH DRAIN, 24"	LF	50		$0.00
0443 70 5	FRENCH DRAIN, 30"	LF	50		$0.00
0443 70 6	FRENCH DRAIN, 36"	LF	50		$0.00
0443 70 7	FRENCH DRAIN, 42"	LF	50		$0.00
0443 70 8	FRENCH DRAIN, 48"	LF	50		$0.00
0443 70 9	FRENCH DRAIN, 54"	LF	50		$0.00
0443 70 10	FRENCH DRAIN, 60"	LF	50		$0.00
0443 72 10	FRENCH DRAIN- AGGREGATE WITHOUT PIPE, 0-0.9’ DEPTH	SY	10		$0.00
0443 72 11	FRENCH DRAIN- AGGREGATE WITHOUT PIPE, 1-1.9’ DEPTH	SY	10		$0.00
0443 72 12	FRENCH DRAIN- AGGREGATE WITHOUT PIPE, 2-2.9’ DEPTH	SY	10		$0.00
0443 72 13	FRENCH DRAIN- AGGREGATE WITHOUT PIPE, 3-3.9’ DEPTH	SY	10		$0.00
0443 72 14	FRENCH DRAIN- AGGREGATE WITHOUT PIPE, 4-4.9’ DEPTH	SY	10		$0.00
0446 1 1	EDGEDRAIN DRAINCRETE, STANDARD	LF	50		$0.00
0446 71 1	EDGEDRAIN OUTLET PIPE, 4"	LF	50		$0.00
0515 1 1	PIPE HANDRAIL - GUIDERAIL, STEEL	LF	50		$0.00
0515 1 2	PIPE HANDRAIL - GUIDERAIL, ALUMINUM	LF	50		$0.00
0515 1 41	PIPE HANDRAIL - GUIDERAIL, RELOCATE, STEEL	LF	50		$0.00
0515 1 42	PIPE HANDRAIL - GUIDERAIL, RELOCATE, ALUMINUM	LF	50		$0.00
0515 2111	PEDESTRIAN / BICYCLE RAILING, NS, 42" TYPE 1	LF	50		$0.00
0515 2211	PEDESTRIAN / BICYCLE RAILING, STEEL, 42" TYPE 1	LF	50		$0.00
0515 2212	PEDESTRIAN / BICYCLE RAILING, STEEL, 42" TYPE 2	LF	50		$0.00
0515 2213	PEDESTRIAN / BICYCLE RAILING, STEEL, 42" TYPE 3	LF	50		$0.00
0515 2221	PEDESTRIAN/ BICYCLE RAILING, STEEL ONLY,54" TYPE 1	LF	50		$0.00
0515 2231	PEDESTRIAN/ BICYCLE RAILING, STEEL ONLY,48" TYPE 1	LF	50		$0.00
0515 2311	PEDESTRIAN/ BICYCLE RAILING, ALUMINUM ONLY,42" TYPE 1	LF	50		$0.00
0515 2312	PEDESTRIAN / BICYCLE RAILING, ALUMINUM, 42" TYPE 2	LF	50		$0.00
0515 2313	PEDESTRIAN / BICYCLE RAILING, ALUMINUM, 42" TYPE 3	LF	50		$0.00
0515 2321	PEDESTRIAN/ BICYCLE RAILING, ALUMINUM ONLY,54" TYPE 1	LF	50		$0.00

0515 2411	PEDESTRIAN / BICYCLE RAILING, SPECIAL MATERIALS- WEATHERING STEEL, 42" TYPE 1	LF	50		$0.00
0515 2500	PEDESTRIAN / BICYCLE RAILING, RELOCATE	LF	50		$0.00
0519 78	BOLLARDS	EA	10		$0.00
0520 1 7	CONCRETE CURB & GUTTER, TYPE E	LF	1000		$0.00
0520 1 10	CONCRETE CURB & GUTTER, TYPE F	LF	5000		$0.00
0520 1 11	CONCRETE CURB & GUTTER, VARIABLE HEIGHT TYPE F	LF	100		$0.00
0520 1 12	CONCRETE CURB & GUTTER, TYPE F WITH SPECIAL GUTTER PROFILE	LF	100		$0.00
0520 2 1	CONCRETE CURB, TYPE A	LF	100		$0.00
0520 2 2	CONCRETE CURB, TYPE B	LF	1000		$0.00
0520 2 4	CONCRETE CURB, TYPE D	LF	1000		$0.00
0520 3	VALLEY GUTTER- CONCRETE	LF	100		$0.00
0520 5 11	TRAFFIC SEPARATOR CONCRETE - TYPE I, 4' WIDE	LF	50		$0.00
0520 5 12	TRAFFIC SEPARATOR CONCRETE - TYPE I, 6' WIDE	LF	50		$0.00
520 5 16	TRAFFIC SEPARATOR CONCRETE- TYPE I, 8.5' WIDE	LF	50		$0.00
0520 5 21	TRAFFIC SEPARATOR - CONCRETE, TYPE II, 4' WIDE	LF	50		$0.00
0520 5 22	TRAFFIC SEPARATOR - CONCRETE, TYPE II, 6' WIDE	LF	50		$0.00
0520 5 26	TRAFFIC SEPARATOR CONCRETE- TYPE II, 8.5' WIDE	LF	50		$0.00
0520 5 41	TRAFFIC SEPARATOR CONCRETE, TYPE IV, 4' WIDE	LF	50		$0.00
0520 5 42	TRAFFIC SEPARATOR CONCRETE, TYPE IV, 6' WIDE	LF	50		$0.00
0520 5 46	TRAFFIC SEPARATOR CONCRETE, TYPE IV, 8.5' WIDE	LF	50		$0.00
0520 5 51	TRAF SEP CONC, TYPE V, 4' WIDE	LF	50		$0.00
0520 6	SHOULDER GUTTER- CONCRETE	LF	50		$0.00
0520 70	CONCRETE TRAFFIC SEPARATOR, SPECIAL - VARIABLE WIDTH	SY	50		$0.00
0521 72 2	SHOULDER CONCRETE BARRIER WALL, BOX CULVERT	LF	100		$0.00
0521 72 3	SHOULDER CONCRETE BARRIER WALL, RIGID-SHOULDER	LF	100		$0.00
0521 72 4	SHOULDER CONCRETE BARRIER WALL, RIGID RETAINING	LF	100		$0.00
0521 72 5	SHOULDER CONCRETE BARRIER WALL, RIGID-CURB & GUTTER	LF	100		$0.00
0521 72 10	SHOULDER CONCRETE BARRIER WALL, RIGID SHOULDER 42"	LF	100		$0.00
0521 72 11	SHOULDER CONCRETE BARRIER WALL, RIGID SHOULDER 54"	LF	100		$0.00

0521 73	CONCRETE BARRIER WALL, REMOVAL	LF	20		$0.00
0522 1	CONCRETE SIDEWALK AND DRIVEWAY, 4" THICK	SY	3000		$0.00
0522 2	CONCRETE SIDEWALK AND DRIVEWAY, 6" THICK	SY	500		$0.00
0522 3	BUS BOARDING PAD - CONCRETE	SY	50		$0.00
0522 4	BUS SHELTER PAD - CONCRETE	SY	50		$0.00
0524 1 1	CONCRETE DITCH PAVT, NON REINFORCED, 3"	SY	10		$0.00
0524 1 2	CONCRETE DITCH PAVEMENT, NON REINFORCED, 4"	SY	10		$0.00
0524 1 3	CONCRETE DITCH PAVEMENT, NON REINFORCED, 5"	SY	10		$0.00
0524 1 4	CONCRETE DITCH PAVEMENT, NON REINFORCED, 6"	SY	10		$0.00
0524 1 19	CONCRETE DITCH PAVT, 3", REINFORCED	SY	10		$0.00
0524 1 29	CONCRETE DITCH PAVEMENT, 4", REINFORCED	SY	10		$0.00
0524 1 49	CONCRETE DITCH PAVEMENT, 6", REINFORCED	SY	10		$0.00
0524 2 1	CONCRETE SLOPE PAVEMENT,NON REINFORCED, 3"	SY	10		$0.00
0524 2 2	CONCRETE SLOPE PAVEMENT,NON REINFORCED, 4"	SY	10		$0.00
0524 2 4	CONCRETE SLOPE PAVEMENT,NON REINFORCED, 6"	SY	10		$0.00
0524 2 29	CONCRETE SLOPE PAVEMENT, 4", REINFORCED	SY	10		$0.00
0524 2 49	CONCRETE SLOPE PAVEMENT, 6", REINFORCED	SY	10		$0.00
0524 3	CONC CORE DITCH BLOCKS	CY	10		$0.00
0526 1 1	PAVERS, ARCHITECTURAL, ROADWAY	SY	50		$0.00
0526 1 2	PAVERS, ARCHITECTURAL, SIDEWALK	SY	50		$0.00
0527 2	DETECTABLE WARNINGS	SF	1000		$0.00
0530 1	RIPRAP, SAND-CEMENT	CY	50		$0.00
0530 3 3	RIPRAP- RUBBLE, BANK AND SHORE	TN	10		$0.00
0530 3 4	RIPRAP, RUBBLE, F&I, DITCH LINING	TN	10		$0.00
0530 3 5	RIPRAP- RUBBLE, COASTAL SHORE- LARGE BOULDERS	TN	10		$0.00
0530 74	BEDDING STONE	TN	10		$0.00
0536 1 0	GUARDRAIL -ROADWAY, GENERAL TL-2	LF	250		$0.00
0536 1 1	GUARDRAIL -ROADWAY, GENERAL TL-3	LF	250		$0.00
0536 1 3	GUARDRAIL ROADWAY, DOUBLE FACE	LF	250		$0.00

0536 1 11	GUARDRAIL, ROADWAY, MODIFIED THRIE BEAM	LF	250		$0.00
0536 1 12	GUARDRAIL ROADWAY, MODIFIED THRIE BEAM-DOUBLE FACE	LF	250		$0.00
0536 5 1	RUB RAIL FOR GUARDRAIL, SINGLE SIDED	LF	250		$0.00
0536 5 2	RUB RAIL FOR GUARDRAIL, DOUBLE SIDED	LF	250		$0.00
0536 7 1	SPECIAL GUARDRAIL POST- DEEP POST FOR SLOPE BREAK CONDITION-TIMBER OR STEEL	EA	5		$0.00
0536 7 2	SPECIAL GUARDRAIL POST- SPECIAL STEEL POST FOR CONCRETE STRUCTURE MOUNT	EA	5		$0.00
0536 7 3	SPECIAL GUARDRAIL POST- ENCASED POST FOR SHALLOW MOUNT	EA	5		$0.00
0536 7 4	SPECIAL GUARDRAIL POST- FRANGIBLE LEAVE-OUT FOR MOUNTING THROUGH CONCRETE SURFACE	EA	5		$0.00
0536 8 11	APPROACH TRANSITION TO RIGID BARRIER- BRIDGE ANCHORAGE ASSEMBLY CONNECTION, FURNISH & INSTALL	EA	5		$0.00
0536 8 12	APPROACH TRANSITION CONNECTION TO RIGID BARRIER, FURNISH AND INSTALL, TL-2	EA	5		$0.00
0536 8 13	APPROACH TRANSITION CONNECTION TO RIGID BARRIER, FURNISH AND INSTALL, TL-3	EA	5		$0.00
0536 8 40	APPROACH TRANSITION TO RIGID BARRIER- BRIDGE ANCHORAGE ASSEMBLY, RELOCATE	EA	5		$0.00
0536 8 60	APPROACH TRANSITION TO RIGID BARRIER- BRIDGE ANCHORAGE ASSEMBLY, REMOVE	EA	5		$0.00
0536 73	GUARDRAIL REMOVAL	LF	25		$0.00
0536 85 22	GUARDRAIL END ANCHORAGE ASSEMBLY/END TREATMENT- FLARED	EA	2		$0.00
0536 85 24	GUARDRAIL END ANCHORAGE ASSEMBLY/END TREATMENT- PARALLEL	EA	2		$0.00
0536 85 25	GUARDRAIL END ANCHORAGE ASSEMBLY/END TREATMENT- TYPE II	EA	2		$0.00
0536 85 26	GUARDRAIL END ANCHORAGE ASSEMBLY/END TREATMENT- TYPE CRT	EA	2		$0.00
0536 85 27	GUARDRAIL END ANCHORAGE ASSEMBLY/END TREATMENT- DOUBLE FACE TERMINAL	EA	2		$0.00
0538 1	GUARDRAIL- RESET	LF	25		$0.00
0539 80111	OPAQUE VISUAL BARRIER, F&I, CONCRETE, 2' 3"	LF	25		$0.00
0544 74 40	RELOCATE CRASH CUSHION - ALL OPTIONS	EA	2		$0.00
0544 75 1	CRASH CUSHION	EA	2		$0.00
0546 71	RUMBLE STRIPS	PS	10		$0.00
0546 72 52	RUMBLE STRIPS, GROUND-IN, 16" CENTERLINE USED WITH RUMBLE STRIPE	GM	1		$0.00
0546 72 53	RUMBLE STRIPS, GROUND-IN, 8" EDGELINE USED WITH RUMBLE STRIPE	GM	1		$0.00
0546 72 55	RUMBLE STRIPS, GROUND-IN, 16" SHOULDER	GM	1		$0.00
0550 10110	FENCING, TYPE A, 0.0-5.0', STANDARD	LF	25		$0.00
0550 10118	FENCING, TYPE A, 0.0-5.0', TYPE A STANDARD, RESET EXISTING	LF	25		$0.00

0550 10119	FENCING, TYPE A, 0.0-5.0', SPECIAL FEATURES	LF	25		$0.00
0550 10120	FENCING, TYPE A, 5.1-6.0, STANDARD	LF	25		$0.00
0550 10128	FENCING, TYPE A, 5.1-6.0', RESET EXISTING	LF	25		$0.00
0550 10130	FENCING, TYPE A, 6.1-7.0, STANDARD	LF	25		$0.00
0550 10140	FENCING, TYPE A, 7.1-8.0', STANDARD	LF	25		$0.00
0550 10148	FENCING, TYPE A, 7.1-8.0', RESET EXISTING	LF	25		$0.00
0550 10149	FENCING, TYPE A, 7.1-8.0', SPECIAL FEATURES	LF	25		$0.00
0550 10150	FENCING, TYPE A, 8.1-10.0', STANDARD	LF	25		$0.00
0550 10158	FENCING, TYPE A, 8.1-10.0', RESET EXISTING	LF	25		$0.00
0550 10159	FENCING, TYPE A, 8.1-10.0', SPECIAL FEATURES	LF	25		$0.00
0550 10169	FENCING, TYPE A, 10.1-12.0', SPECIAL FEATURES	LF	25		$0.00
0550 10210	FENCING, TYPE B, 0.0-5.0', STANDARD FEATURES	LF	25		$0.00
0550 10212	FENCING, TYPE B, 0.5-5.0', W/ VINYL COATING	LF	25		$0.00
0550 10218	FENCING, TYPE B, 0.0-5.0', RESET EXISTING	LF	25		$0.00
0550 10219	FENCING, TYPE B, 0.0-5.0', SPECIAL FEATURES	LF	25		$0.00
0550 10220	FENCING, TYPE B, 5.1-6.0', STANDARD	LF	25		$0.00
0550 10221	FENCING, TYPE B, 5.1-6.0', W/ BARB WIRE ATTMT	LF	25		$0.00
0550 10222	FENCING, TYPE B, 5.1-6.0, W/ VINYL COATING	LF	25		$0.00
0550 10228	FENCING, TYPE B, 5.1-6.0, RESET EXISTING	LF	25		$0.00
0550 10229	FENCING, TYPE B, 5.1-6.0, SPECIAL FEATURES	LF	25		$0.00
0550 10230	FENCING, TYPE B, 6.1-7.0', STANDARD	LF	25		$0.00
0550 10231	FENCING, TYPE B, 6.1-7.0, W/ BARB WIRE ATTMT	LF	25		$0.00
0550 10232	FENCING, TYPE B, 6.1-7.0, W/ VINYL COATING	LF	25		$0.00
0550 10238	FENCING, TYPE B, 6.1-7.0, RESET EXISTING	LF	25		$0.00
0550 10240	FENCING, TYPE B, 7.1-8.0', STANDARD	LF	25		$0.00
0550 10242	FENCING, TYPE B, 7.1-8.0', VINYL COATING	LF	25		$0.00
0550 10248	FENCING, TYPE B, 7.1-8.0, RESET EXISTING	LF	25		$0.00
0550 10250	FENCING, TYPE B, 8.1-10.0', STANDARD FEATURES	LF	25		$0.00
0550 10251	FENCING, TYPE B, 8.1-10.0', WITH BARBED WIRE ATTMT	LF	25		$0.00

0550 10252	FENCING, TYPE B, 8.1-10.0', VINYL COATING	LF	25		$0.00
0550 10256	FENCING, TYPE B, 8-10.0', WITH VINYL COATING AND BARBED WIRE ATTACHMENT	LF	25		$0.00
0550 10258	FENCING, TYPE B, 8.1-10.0', RESET EXISTING FENCE	LF	25		$0.00
0550 10259	FENCING, TYPE B, 8.1-10.0', SPECIAL	LF	25		$0.00
0550 10266	FENCING, TYPE B, 10.1-12.0', WITH VINYL COATING AND BARBED WIRE ATTACHMENT	LF	25		$0.00
0550 10315	FENCING, TYPE R, 0-5.0', VERTICAL	LF	25		$0.00
0550 10325	FENCING, TYPE R, 5.1-6.0', VERTICAL	LF	25		$0.00
0550 10335	FENCING, TYPE R, 6.1-7.0', VERTICAL	LF	25		$0.00
0550 10343	FENCING, TYPE R, 7.1-8.0, W/FULL ENCLOSURE	LF	25		$0.00
0550 10344	FENCING, TYPE R, 7.1-8.0, W / PARTIAL ENCLOSURE	LF	25		$0.00
0550 10353	FENCING, TYPE R, 8.1 - 10.0', WITH FULL ENCLOSURE	LF	25		$0.00
0550 10354	FENCING, TYPE R, 8.1-10.0', WITH PARTIAL ENCLOSURE, TYPE R ONLY	LF	25		$0.00
0550 10355	FENCING, TYPE R, 8.1-10.0', VERTICAL	LF	25		$0.00
0550 10363	FENCING, TYPE R, GREATER THAN 10.0', WITH FULL ENCLOSURE	LF	25		$0.00
0570 1 2	PERFORMANCE TURF, SOD	SY	1500		$0.00
0571 1 11	PLASTIC EROSION MAT, TURF REINFORCED MAT, TYPE 1	SY	100		$0.00
0571 1 12	PLASTIC EROSION MAT, TRM, TYPE 2	SY	100		$0.00
0571 1 13	PLASTIC EROSION MAT, TURF REINFORCED MAT, TYPE 3	SY	100		$0.00
0591 1 2	4" LANDSCAPE SLEEVE (UNDERGROUND)	LF	50		$0.00
0591 1 2A	4" LANDSCAPE SLEEVE (BORED)	LF	50		$0.00
0630 2 11	CONDUIT, FURNISH & INSTALL, OPEN TRENCH	LF	1000		$0.00
0630 2 12	CONDUIT, FURNISH & INSTALL, DIRECTIONAL BORE	LF	1000		$0.00
0630 2 14	CONDUIT, FURNISH & INSTALL, ABOVEGROUND	LF	1000		$0.00
0630 2 15	CONDUIT, FURNISH & INSTALL, BRIDGE MOUNT	LF	100		$0.00
0630 2 65	CONDUIT, REMOVE, BRIDGE MOUNT	LF	100		$0.00
0654 001	RECTANGULAR RAPID FLASHING BEACON ASSEMBLY	EA	2		$0.00
0660 2101	LOOP ASSEMBLY- F&I, TYPE A	AS	20		$0.00
0660 2102	LOOP ASSEMBLY, F&I, TYPE B	AS	20		$0.00
0660 2103	LOOP ASSEMBLY, F&I, TYPE C	AS	20		$0.00

0660 2104	LOOP ASSEMBLY, F&I, TYPE D	AS	20		$0.00
0660 2105	LOOP ASSEMBLY, F&I, TYPE E	AS	20		$0.00
0660 2106	LOOP ASSEMBLY, F&I, TYPE F	AS	20		$0.00
0660 2107	LOOP ASSEMBLY, F&I, TYPE G	AS	20		$0.00
0660 3 11	VEHICLE DETECTION SYSTEM- MICROWAVE, FURNISH & INSTALL CABINET EQUIPMENT	EA	5		$0.00
0660 3 12	VEHICLE DETECTION SYSTEM- MICROWAVE, FURNISH & INSTALL, ABOVE GROUND EQUIPMENT	EA	5		$0.00
0700 1 11	SINGLE POST SIGN, F&I GROUND MOUNT, UP TO 12 SF	AS	50		$0.00
0700 1 12	SINGLE POST SIGN, F&I GROUND MOUNT, 12-20 SF	AS	20		$0.00
0700 1 13	SINGLE POST SIGN, F&I GROUND MOUNT, 21-30 SF	AS	5		$0.00
0700 1 14	SINGLE POST SIGN, F&I GROUND MOUNT, 31+ SF	AS	5		$0.00
0700 1 18	SINGLE POST SIGN, F&I GROUND MOUNT, IN-STREET FLEXIBLE POST	AS	5		$0.00
0700 1 21	SINGLE POST SIGN, F&I BARRIER MOUNT INDEX 11871 UP TO 12 SF	AS	5		$0.00
0700 1 22	SINGLE POST SIGN, F&I BARRIER MOUNT INDEX 11871 12-20 SF	AS	5		$0.00
0700 1 23	SINGLE POST SIGN, F&I BARRIER MOUNT INDEX 11871, 21-30 SF SHEETING AREA- BACK TO BACK	AS	5		$0.00
0700 1 31	SINGLE POST SIGN, F&I BRIDGE MOUNT INDEX 11870, UP TO 12 SF	AS	5		$0.00
0700 1 32	SINGLE POST SIGN, F&I BRIDGE MOUNT INDEX 11870, 12-20 SF	AS	5		$0.00
0700 1 33	SINGLE POST SIGN, F&I BRIDGE MOUNT INDEX 11870, 21-30 SF	AS	5		$0.00
0700 1 40	SINGLE POST SIGN, INSTALL	AS	5		$0.00
0700 1 50	SINGLE POST SIGN, RELOCATE	AS	10		$0.00
0700 1 60	SINGLE POST SIGN, REMOVE	AS	50		$0.00
0700 1 74	SINGLE POST SIGN, F&I CUSTOM, 31+ SF	AS	5		$0.00
0700 2 11	MULTI- POST SIGN, F&I GROUND MOUNT, UP TO 12 SF	AS	5		$0.00
0700 2 12	MULTI- POST SIGN, F&I GROUND MOUNT, 12-20 SF	AS	5		$0.00
0700 2 13	MULTI- POST SIGN, F&I GROUND MOUNT, 21-30 SF	AS	5		$0.00
0700 2 14	MULTI- POST SIGN, F&I GROUND MOUNT, 31-50 SF	AS	5		$0.00
0700 2 15	MULTI- POST SIGN, F&I GROUND MOUNT, 51-100 SF	AS	5		$0.00
0700 2 16	MULTI- POST SIGN, F&I GROUND MOUNT, 101-200 SF	AS	5		$0.00
0700 2 40	MULTI- POST SIGN, INSTALL	AS	5		$0.00
0700 2 50	MULTI- POST SIGN, F&I GROUND MOUNT, RELOCATE	AS	5		$0.00

0700 2 60	MULTI- POST SIGN, F&I GROUND MOUNT, REMOVE	AS	5		$0.00
0700 2 80	MULTI- POST SIGN, F&I GROUND MOUNT, REPAIR	AS	5		$0.00
0700 3101	SIGN PANEL, FURNISH & INSTALL GROUND MOUNT, UP TO 12 SF	EA	5		$0.00
0700 3102	SIGN PANEL, FURNISH & INSTALL GROUND MOUNT, 12-20 SF	EA	5		$0.00
0700 3103	SIGN PANEL, FURNISH & INSTALL GROUND MOUNT, 21-30 SF	EA	5		$0.00
0700 3104	SIGN PANEL, FURNISH & INSTALL GROUND MOUNT, 31-50 SF	EA	5		$0.00
0700 3105	SIGN PANEL, FURNISH & INSTALL GROUND MOUNT, 51-100 SF	EA	5		$0.00
0700 3106	SIGN PANEL, FURNISH & INSTALL GROUND MOUNT, 101-200 SF	EA	5		$0.00
0700 3201	SIGN PANEL, FURNISH & INSTALL OVERHEAD MOUNT, UP TO 12 SF	EA	5		$0.00
0700 3202	SIGN PANEL, FURNISH & INSTALL OVERHEAD MOUNT, 12-20 SF	EA	5		$0.00
0700 3203	SIGN PANEL, FURNISH & INSTALL OVERHEAD MOUNT, 21-30 SF	EA	5		$0.00
0700 3204	SIGN PANEL, FURNISH & INSTALL OVERHEAD MOUNT, 31-50 SF	EA	5		$0.00
0700 3205	SIGN PANEL, FURNISH & INSTALL OVERHEAD MOUNT, 51-100 SF	EA	5		$0.00
0700 3206	SIGN PANEL, FURNISH & INSTALL OVERHEAD MOUNT, 101-200 SF	EA	5		$0.00
0700 3401	SIGN PANEL, INSTALL, UP TO 12 SF	EA	5		$0.00
0700 3402	SIGN PANEL, INSTALL, 12-20 SF	EA	5		$0.00
0700 3403	SIGN PANEL, INSTALL, 21-30 SF,	EA	5		$0.00
0700 3404	SIGN PANEL, INSTALL, 31-50 SF	EA	5		$0.00
0700 3405	SIGN PANEL, INSTALL, 51-100 SF,	EA	5		$0.00
0700 3406	SIGN PANEL, INSTALL, 101-200 SF	EA	5		$0.00
0700 3501	SIGN PANEL, RELOCATE, UP TO 12 SF	EA	5		$0.00
0700 3502	SIGN PANEL, RELOCATE, 12-20 SF	EA	5		$0.00
0700 3503	SIGN PANEL, RELOCATE, 21-30 SF	EA	5		$0.00
0700 3504	SIGN PANEL, RELOCATE, 31-50 SF	EA	5		$0.00
0700 3505	SIGN PANEL, RELOCATE, 51-100 SF	EA	5		$0.00
0700 3506	SIGN PANEL, RELOCATE, 101-200 SF	EA	5		$0.00
0700 3601	SIGN PANEL, REMOVE, UP TO 12 SF	EA	5		$0.00
0700 3602	SIGN PANEL, REMOVE, 12-20 SF	EA	5		$0.00
0700 3603	SIGN PANEL, REMOVE, 21-30 SF	EA	5		$0.00

0700 3604	SIGN PANEL, REMOVE, 31-50 SF	EA	5		$0.00
0700 3605	SIGN PANEL, REMOVE, 51-100 SF	EA	5		$0.00
0700 3606	SIGN PANEL, REMOVE, 101-200 SF	EA	5		$0.00
0700 3624	SIGN PANEL, REMOVE, UP TO 50 SF WITH LIGHTING	EA	5		$0.00
0700 3625	SIGN PANEL, REMOVE, 51-100 SF WITH LIGHTING	EA	5		$0.00
0700 3626	SIGN PANEL, REMOVE, 101-200 SF WITH LIGHTING	EA	5		$0.00
0700 12 11	SIGN BEACON, F&I GROUND MOUNT- AC POWERED, ONE BEACON	AS	5		$0.00
0700 12 12	SIGN BEACON, F&I GROUND MOUNT- AC POWERED, TWO BEACONS	AS	5		$0.00
0700 12 21	SIGN BEACON, F&I GROUND MOUNT- SOLAR POWERED, ONE BEACON	AS	5		$0.00
0700 12 22	SIGN BEACON, F&I GROUND MOUNT- SOLAR POWERED, TWO BEACONS	AS	5		$0.00
0700 12 31	SIGN BEACON, F&I OVERHEAD MOUNT, ONE BEACON	AS	5		$0.00
0700 12 32	SIGN BEACON, F&I OVERHEAD MOUNT, TWO BEACONS	AS	5		$0.00
0700 12 50	SIGN BEACON, RELOCATE BEACON- SIGN TO REMAIN	AS	5		$0.00
0700 12 60	SIGN BEACON, REMOVE BEACON- SIGN TO REMAIN	AS	5		$0.00
0700 13 10	RETROREFLECTIVE SIGN STRIP- BACK OF RAIL ROAD CROSSBUCK SIGN BLADES	EA	5		$0.00
0700 13 12	RETROREFLECTIVE SIGN STRIP- FURNISH AND INSTALL, 2'	EA	5		$0.00
0700 13 15	RETROREFLECTIVE SIGN STRIP- FURNISH AND INSTALL, 5'	EA	5		$0.00
0701 17101	PROFILED THERMOPLASTIC,STANDARD- CONCRETE SURFACES, WHITE, SOLID,6"	GM	1		$0.00
0701 17201	PROFILED THERMOPLASTIC,STANDARD- CONCRETE SURFACES, YELLOW, SOLID,6"	GM	1		$0.00
0701 17221	PROFILED THERMOPLASTIC,STANDARD- CONCRETE SURFACES, YELLOW, SKIP,6"	GM	1		$0.00
0701 18101	PROFILED THERMOPLASTIC,STANDARD- ASPHALT SURFACES, WHITE, SOLID,6"	GM	1		$0.00
0701 18201	PROFILED THERMOPLASTIC,STANDARD- ASPHALT SURFACES, YELLOW, SOLID,6"	GM	1		$0.00
0701 18221	PROFILED THERMOPLASTIC,STANDARD- ASPHALT SURFACES, YELLOW, SKIP,6"	GM	1		$0.00
0705 10 1	OBJECT MARKER, TYPE 1	EA	5		$0.00
0705 10 2	OBJECT MARKER, TYPE 2	EA	5		$0.00
0705 10 3	OBJECT MARKER, TYPE 3	EA	5		$0.00
0705 10 4	OBJECT MARKER, TYPE 4	EA	5		$0.00
0705 11 1	DELINEATOR, FLEXIBLE TUBULAR	EA	50		$0.00
0705 11 2	DELINEATOR, NON-FLEXIBLE	EA	5		$0.00

0705 11 3	DELINEATOR, FLEXIBLE HIGH VISABILITY MEDIAN	EA	5		$0.00
0705 11 4	DELINEATOR, FLEXIBLE HIGH PERFORMANCE	EA	5		$0.00
0706 1 3	RAISED PAVEMENT MARKER, TYPE B	EA	200		$0.00
0710 90	PAINTED PAVEMENT MARKINGS, FINAL SURFACE	LS	5		$0.00
0710 11101	PAINTED PAVEMENT MARKINGS, STANDARD, WHITE, SOLID, 6"	GM	1		$0.00
0710 11102	PAINTED PAVEMENT MARKINGS, STANDARD, WHITE, SOLID FOR INTERCHANGE AND URBAN ISLAND, 8"	GM	1		$0.00
0710 11103	PAINTED PAVEMENT MARKINGS, STANDARD, WHITE, SOLID FOR INTERCHANGE MARKINGS, 12"	GM	1		$0.00
0710 11123	PAINTED PAVEMENT MARKINGS, STANDARD, WHITE, SOLID, 12"	LF	3000		$0.00
0710 11124	PAINTED PAVEMENT MARKINGS, STANDARD, WHITE, SOLID, 18"	LF	2000		$0.00
0710 11125	PAINTED PAVEMENT MARKINGS, STANDARD, WHITE, SOLID, 24"	LF	2000		$0.00
0710 11131	PAINTED PAVEMENT MARKINGS, STANDARD, WHITE, SKIP, 10-30 OR 3-9 SKIP, 6" WIDE	GM	1		$0.00
0710 11133	PAINTED PAVEMENT MARKING, STANDARD,WHITE, 3'-9' SKIP DROP LINE AND APPROACH TO TOLL PLAZA, 12" WIDE,	GM	1		$0.00
0710 11141	PAINTED PAVEMENT MARKINGS, STANDARD, WHITE, 2-4 DOTTED GUIDELINE/ 6-10 DOTTED EXTENSION, 6"	GM	1		$0.00
0710 11160	PAINTED PAVEMENT MARKINGS, STANDARD, WHITE, MESSAGE	EA	25		$0.00
0710 11170	PAINTED PAVEMENT MARKINGS, STANDARD, WHITE, ARROWS	EA	25		$0.00
0710 11180	PAINTED PAVEMENT MARKINGS, STANDARD, WHITE, YIELD LINE	LF	500		$0.00
0710 11190	PAINTED PAVEMENT MARKINGS, STANDARD, WHITE, ISLAND NOSE	SF	100		$0.00
0710 11201	PAINTED PAVEMENT MARKINGS, STANDARD, YELLOW, SOLID, 6"	GM	1		$0.00
0710 11202	PAINTED PAVEMENT MARKINGS, STANDARD, YELLOW, SOLID FOR INTERCHANGE AND URBAN ISLAND, 8"	GM	1		$0.00
0710 11203	PAINTED PAVEMENT MARKINGS, STANDARD, YELLOW, SOLID, 12"	GM	1		$0.00
0710 11223	PAINTED PAVEMENT MARKINGS, STANDARD, YELLOW, SOLID, 12"	LF	100		$0.00
0710 11224	PAINTED PAVEMENT MARKINGS, STANDARD, YELLOW, SOLID, 18"	LF	300		$0.00
0710 11225	PAINTED PAVEMENT MARKINGS, STANDARD, YELLOW, SOLID, 24"	LF	100		$0.00
0710 11231	PAINTED PAVEMENT MARKINGS, STANDARD, YELLOW, SKIP, 6"	GM	1		$0.00
0710 11241	PAINTED PAVEMENT MARKINGS, STANDARD, YELLOW, 2-4 DOTTED GUIDELINE/6-10 DOTTED EXTENSION, 6"	GM	1		$0.00
0710 11290	PAINTED PAVEMENT MARKINGS, STANDARD, YELLOW, ISLAND NOSE	SF	100		$0.00
0710 11331	PAINTED PAVEMENT MARKINGS, STANDARD,BLACK, SKIP, 6"	GM	1		$0.00
0710 11333	PAINTED PAVEMENT MARKING, STANDARD, BLACK, 3'-9' DOTTED LANE DROP AND APPROACH TO TOLL PLAZA, 12"	GM	1		$0.00
0710 11341	PAINTED PAVEMENT MARKINGS, STANDARD, BLACK, 2-4 DOTTED GUIDELINE/ 6-10 DOTTED EXTENSION, 6"	GM	1		$0.00

0710 11421	PAINTED PAVEMENT MARKINGS, STANDARD, BLUE, SOLID FOR PARKING LOT- ACCESSIBLE MARKINGS, 6"	LF	100		$0.00
0710 12231	PAINTED PAVEMENT MARKINGS, DURABLE, YELLOW, SKIP, 6"	GM	1		$0.00
0710 12421	PAINTED PAVEMENT MARKINGS, DURABLE, BLUE, SOLID FOR PARKING LOT-ACCESSIBLE MARKINGS, 6"	LF	100		$0.00
0711 11102	THERMOPLASTIC, STANDARD, WHITE, SOLID, 8" FOR INTERCHANGE AND URBAN ISLAND	GM	1		$0.00
0711 11103	THERMOPLASTIC, STANDARD, WHITE, SOLID, 12" FOR INTERCHANGE MARKINGS	GM	1		$0.00
0711 11123	THERMOPLASTIC, STANDARD, WHITE, SOLID, 12" FOR CROSSWALK AND ROUNDABOUT	LF	2500		$0.00
0711 11124	THERMOPLASTIC, STANDARD, WHITE, SOLID, 18" FOR DIAGONALS AND CHEVRONS	LF	500		$0.00
0711 11125	THERMOPLASTIC, STANDARD, WHITE, SOLID, 24" FOR STOP LINE AND CROSSWALK	LF	1500		$0.00
0711 11130	THERMOPLASTIC, STANDARD, WHITE, VERTICAL DEFLECTION MARKING	EA	10		$0.00
0711 11140	THERMOPLASTIC, STANDARD, WHITE, VERTICAL DEFLECTION ADVANCED WARNING MARKING	EA	10		$0.00
0711 11141	THERMOPLASTIC, STANDARD, WHITE, 2-4 DOTTED GUIDELINE/ 6-10 GAP EXTENSION, 6"	GM	1		$0.00
0711 11143	THERMOPLASTIC, STANDARD, WHITE, 2-4 DOTTED GUIDELINE, 12" FOR ROUNDABOUT	GM	1		$0.00
0711 11160	THERMOPLASTIC, STANDARD, WHITE, MESSAGE OR SYMBOL	EA	20		$0.00
0711 11170	THERMOPLASTIC, STANDARD, WHITE, ARROW	EA	20		$0.00
0711 11180	THERMOPLASTIC, STANDARD, WHITE, YIELD LINE	LF	250		$0.00
0711 11224	THERMOPLASTIC, STANDARD, YELLOW, SOLID, 18" FOR DIAGONAL OR CHEVRON	LF	250		$0.00
0711 11241	THERMOPLASTIC, STANDARD, YELLOW, 2-4 DOTTED GUIDE LINE /6-10 DOTTED EXTENSION LINE, 6"	GM	1		$0.00
0711 11421	THERMOPLASTIC, STANDARD, BLUE, SOLID,6"	LF	100		$0.00
0711 14123	THERMOPLASTIC, PREFORMED, WHITE, SOLID, 12"	LF	1000		$0.00
0711 14125	THERMOPLASTIC, PREFORMED, WHITE, SOLID, 24"	LF	1000		$0.00
0711 14141	THERMOPLASTIC, PREFORMED, WHITE, 2-4 DOTTED GUIDELINE ON CONCRETE SURFACES	GM	1		$0.00
0711 14160	THERMOPLASTIC, PREFORMED, WHITE, MESSAGE	EA	5		$0.00
0711 14170	THERMOPLASTIC, PREFORMED, WHITE, ARROWS	EA	20		$0.00
0711 14191	THERMOPLASTIC, PREFORMED, 6" WHITE, RAILROAD DYNAMIC ENVELOPE	LF	100		$0.00
0711 14193	THERMOPLASTIC, PREFORMED, 12" WHITE ON ASPHALT PAVEMENT, RAILROAD DYNAMIC ENVELOPE	LF	250		$0.00
0711 14194	THERMOPLASTIC, PREFORMED, 12" WHITE WITH 4" OUTSIDE BLACK CONTRAST ON CONCRETE PAVEMENT, RAILROAD DYNAMIC ENVELOPE	LF	100		$0.00
0711 14341	THERMOPLASTIC, PREFORMED, BLACK, 2-4 DOTTED GUIDELINE ON CONCRETE SURFACES	GM	1		$0.00
0711 14560	THERMOPLASTIC, PREFORMED, WHITE WITH BLACK CONTRAST ON CONCRETE PAVEMENT, MESSAGE OR SYMBOL	EA	5		$0.00
0711 14570	THERMOPLASTIC, PREFORMED, WHITE WITH BLACK CONTRAST, ARROW ON CONCRETE SURFACE	EA	5		$0.00

0711 15101	THERMOPLASTIC, STANDARD-OPEN GRADED ASPHALT SURFACES WHITE, SOLID, 6"	GM	1		$0.00
0711 15102	THERMOPLASTIC, STANDARD-OPEN GRADED ASPHALT SURFACES, WHITE, SOLID, 8"	GM	1		$0.00
0711 15131	THERMOPLASTIC, STANDARD-OPEN GRADED ASPHALT SURFACES, WHITE, SKIP, 6",10-30 SKIP OR 3-9 LANE DROP	GM	1		$0.00
0711 15133	THERMOPLASTIC, STANDARD-OPEN GRADED ASPHALT SURFACES, WHITE, SKIP, 12"- APPROACH TO TOLL PLAZA OR 3-9 LANE DROP	GM	1		$0.00
0711 15201	THERMOPLASTIC, STANDARD-OPEN GRADED ASPHALT SURFACES, YELLOW, SOLID, 6"	GM	1		$0.00
0711 15202	THERMOPLASTIC, STANDARD-OPEN GRADED ASPHALT SURFACES YELLOW, SOLID, 8"	GM	1		$0.00
0711 15231	THERMOPLASTIC, STANDARD-OPEN GRADED ASPHALT SURFACES, YELLOW, SKIP, 6"	GM	1		$0.00
0711 16101	THERMOPLASTIC, STANDARD-OTHER SURFACES, WHITE, SOLID, 6"	GM	3		$0.00
0711 16102	THERMOPLASTIC, STANDARD-OTHER SURFACES, WHITE, SOLID, 8"	GM	1		$0.00
0711 16131	THERMOPLASTIC, OTHER SURFACES, WHITE, SKIP, 6",10-30 SKIP OR 3-9 LANE DROP	GM	1		$0.00
0711 16133	THERMOPLASTIC, STANDARD-OTHER SURFACES WHITE, SKIP, 12"- APPROACH TO TOLL PLAZA OR 3-9 LANE DROP	GM	1		$0.00
0711 16201	THERMOPLASTIC, STANDARD-OTHER SURFACES, YELLOW, SOLID, 6"	GM	3		$0.00
0711 16202	THERMOPLASTIC, STANDARD-OTHER SURFACES, YELLOW, SOLID, 8"	GM	1		$0.00
0711 16231	THERMOPLASTIC, STANDARD-OTHER SURFACES, YELLOW, SKIP, 6"	GM	1		$0.00
0711 17	THERMOPLASTIC, REMOVE EXISTING THERMOPLASTIC PAVEMENT MARKINGS: NON-CONFLICTING ONLY	SF	500		$0.00
0711 12131	THERMOPLASTIC, REFURBISHMENT, WHITE, SKIP, 6"	GM	1		$0.00
0711 12160	THERMOPLASTIC, REFURBISH, WHITE, MESSAGE	EA	5		$0.00
0711 12170	THERMOPLASTIC, REFURBISH, WHITE, ARROWS	EA	5		$0.00
0711 12231	THERMOPLASTIC, REFURBISHMENT, YELLOW, SKIP, 6"	GM	1		$0.00
713103101	PERMANENT TAPE, WHITE, SOLID, 6" FOR CONCRETE BRIDGES	GM	1		$0.00
713103102	PERMANENT TAPE, WHITE, SOLID, 8" EXIT LANE AT INTERCHANGE ON CONCRETE PAVEMENT	GM	1		$0.00
713103103	PERMANENT TAPE, WHITE, SOLID DROP LANE MARKING, 12" FOR CONCRETE BRIDGES,	GM	1		$0.00
713103131	PERMANENT TAPE, WHITE, SKIP/DOTTED, 6" FOR CONCRETE SURFACES	GM	1		$0.00
713103133	PERMANENT TAPE, WHITE, SKIP, 12" WIDE 3'-9' DROP LANE ON CONCRETE SURFACES	GM	1		$0.00
713103201	PERMANENT TAPE, YELLOW, SOLID, 6" FOR CONCRETE BRIDGES	GM	1		$0.00
713103231	PERMANENT TAPE, YELLOW, 10-30 SKIP/ 3-9 DOTTED, 6" FOR CONCRETE SURFACES	GM	1		$0.00
713103331	PERMANENT TAPE, BLACK, SKIP/DOTTED, 6" FOR CONCRETE SURFACES	GM	1		$0.00
713103333	PERMANENT TAPE, BLACK, 3'-9' DROP LANE, 12" ON CONCRETE SURFACES	GM	1		$0.00
713107	PREFORMED/PERMANENT TAPE, REMOVE	SF	50		$0.00

400143	CLEANING & COATING CONCRETE SURFACE, CLASS 5	SF	5		$0.00
906-173-7	SINGLE COMPONENT POLYURETHANE INJECTION	GAL	500		$0.00
906-173-8	TWO COMPONENT POLYURETHANE INJECTION	LB	10000		$0.00
MISCELLANEOUS LABOR, EQUIPMENT, MATERIAL, AND SUB-CONTRACTOR ITEMS					
	LABOR - FOREMAN	HR	1		$0.00
	LABOR - OPERATOR	HR	1		$0.00
	LABOR - TRUCK DRIVER	HR	1		$0.00
	LABOR - PIPE LAYERS (FOR PIPES < 48" DIA.)	HR	1		$0.00
	LABOR - LABORER	HR	1		$0.00
	EQUIPMENT - FOREMAN P/U WITH HAND TOOLS	HR	1		$0.00
	EQUIPMENT - JOB TRUCK WITH MANDATORY TOOLS*	HR	1		$0.00
	EQUIPMENT - CRANE (20 TON)	HR	1		$0.00
	EQUIPMENT - CRANE (60 TON)	HR	1		$0.00
	EQUIPMENT - TRACTOR & TRAILER (TRANSPORT)	HR	1		$0.00
	EQUIPMENT - TRACK HOE (TO 100 HP)	HR	1		$0.00
	EQUIPMENT - TRACK HOE (101 HP TO 170 HP)	HR	1		$0.00
	EQUIPMENT - RUBBER TIRED BACKHOE	HR	1		$0.00
	EQUIPMENT - WHEEL LOADER (TO 150 HP)	HR	1		$0.00
	EQUIPMENT - WHEEL LOADER (151 HP AND UP)	HR	1		$0.00
	EQUIPMENT - TRACK TYPE TRACTORS (TO 100 HP)	HR	1		$0.00
	EQUIPMENT - TRACK TYPE TRACTORS (101 HP AND UP)	HR	1		$0.00
	EQUIPMENT - DUMP TRUCK (TANDEM AXLE)	HR	1		$0.00
	EQUIPMENT - PLATE TAMP	HR	1		$0.00
	EQUIPMENT - 3" TRASH PUMP	HR	1		$0.00
	EQUIPMENT - 4" DOUBLE DIAPHRAGM PUMP	HR	1		$0.00
	EQUIPMENT - AIR COMPRESSOR (125 SCFM)	HR	1		$0.00
	EQUIPMENT - WELL POINT PUMP	HR	1		$0.00
	EQUIPMENT - 4" JET PUMP	HR	1		$0.00
	MATERIAL - 2500 PSI CONCRETE (UN-FORMED)	CY	1		$0.00
	MATERIAL - OFF SITE SELECT FILL	CY	1		$0.00
	MATERIAL - LIMEROCK BASE MATERIAL	TN	1		$0.00
	MATERIAL - #57 WASHED STONE	TN	1		$0.00
	MATERIAL - ASPHALT PAVING (1.5" THICK; TYPE S-3)	SY	1		$0.00
	MATERIAL - BAHIA SOD	SY	1		$0.00
	SUB-CONTRACTOR - WELDER WITH TRUCK	HR	1		$0.00
	SUB-CONTRACTOR - TRACTOR WITH 7' BUSH HOG	HR	1		$0.00

* Contractor Job Truck Mandatory Tools

	Tool	Minimum size	Quantity
1	Air compressor	20 CFM @ 90PSI	1
2	3/4" drive ratchet and socket set		1
3	1 inch drive air impact wrench		1
4	1 inch drive sockets	1-1/2" to 3"	1 each
5	Slug wrenches	1-1/2" to 3"	1
6	End wrenches	7/16" to 1-1/2"	2 each
7	Porta band saw w spare blades	4" opening	1
8	Sawzall w spare blades		1
9	Nylon slings 5,000 and 10,000 pound rated (vertical)	2" 2 ply/4" 2 ply	2 each
10	Grade 80 Chain 10,000 pound rated	1/2" X 10 ft	2
11	Clevis or Shackles 5 ton rated	5/8" alloy	4
12	Porta power 10 ton		1
13	Shovels- round and square point		3 each
14	Cutting torch set *see note*		1
15	Gas or diesel stick welder and accessories *see note*		1
16	Small diaphragm pump and accessories	2" suction	1
17	Tap and die set	1/2" to 2" NPT	1
18	Drill and bits for steel or ductile	1/2" to 2" NPT size	1 set
19	Pry bar	5 foot	1
20	Come along	2ton	2
21	Circular Saw and blades for cribbing/forms	7 1/2 inch	2
22	Generator 120/240 volt	3500 watt	1
23	Framing hammer and nails for forms		2
24	Screw gun and screws for forms and cribbing		1
25	Gas powered cutoff saw (K-12)	12inch	1
26	Chain saw for cribbing and for'ms	14 inch bar	1
27	Sledge hammers	4t/ and 6tl	1 each
28	Crew PPE to include Hard hat and gloves at minimum	as needed	per person

155 Corey Avenue
St. Pete Beach, FL 33706-1839
www.stpetebeach.org

ADDENDUM 1

Civil On Call Construction Services

Issued 3/23/2026

*Sealed bids must be received by **9:00 AM on 04/08/2026** electronically via Bonfire. Bids received after the deadline will not be accepted. They will be publicly opened and read at **11:00 AM on 04/08/2026**. All bidders are invited to attend this bid Opening.*

Addendum 1 includes:

Pre-bid Minutes
Questions and Answers

Optional - Pre-Bid Meeting Minutes
RFP: Civil On Call Construction Services
March 18, 2026
10:00 AM

Staff Members Present:
Sara Spain, Procurement Manager
John Taylor, Assistant Finance Director
Camden Mills, Public Services Director
Dejan Milosevic, Project Manager
Michael Weaver, Infrastructure Operations Manager
Brian Gelock, Public Services
Kenneth Kosbab, Public Services
Ariana Wilson-Romo, Exec. Assistant City Clerk's Office

Others Present:

Name	***Company***	***Contact***
Abbey Boyle	PCS Civil	abbeyb@pcscivilinc.com
Bruno Sequeira	BCS Construction Group	Did not provide.
George Pappas	Southern Road & Bridge LLC	gpappas@southernrb.com
Tristan Hine	PCS Civil	tristanh@pcscivilinc.com
Dave Reid	Ajax Paving Industries of FL LLC	flestimate@ajaxpaving.com
Zachariah Wachalec	David Nelson Construction Co.	zwachalec@nelson-consturction.com

The meeting was called to order at 10:02 AM.

All attendees were present via Teams.

Ms. Spain briefly reviewed important dates and times which are as follows:
- Receipt of questions due 3/25 at 10AM
- Bids due 4/8 by 9AM
- Bid opening 4/8 at 11AM

She requested that any questions be submitted in writing to purchasing@stpetebeach.org. Questions will be answered via an addendum that will be posted to the City website and Bonfire.

Public Services Director Camden Mills stated that the City is seeking as-needed construction services for various capital projects and/or maintenance projects. Ms. Spain clarified that the City does anticipate awarding multiple vendors.

The following questions were asked:
Q: Contract terms? A: 3yr with options for two one-year renewals.
Q: Size project monetary-wise? A: The scope touches on what the dollar amounts would be. This contract would be used for anything under $4M. An addendum with anticipated projects can be posted.

There were questions regarding how contractors are selected if unit line items were being submitted in advance. Mr. Mills and Ms. Spain will clarify the contract language via an addendum. Ms. Spain added that in the general contract terms, it states that submissions will be evaluated on capability, cost, and capacity to perform the specific line items requested.
There being no additional questions, the meeting was adjourned at 10:16 AM.

Questions and Answers:

1. **Are there any plans available for the potential work needed? Or would you like us to provide the price for each line item on the bid form? – Plans are not yet available for the potential work needed. Please provide the unit price for each line item on the bid form that you're capable of performing or subcontracting.**
2. **On the bid form for the On-Call Civil Construction Services list, pay items 285701 through 285715, Optional Base Group 1 through Optional Base Group 15, are listed, but it does not specify which base option will be required. What base options are needed for each base group? – Base Groups 1-11: Graded aggregate based or crushed concrete, consisting of granitic material (minimum LBR 100). Base groups 12-15: Type B-12.5.**
3. **Prebid question: Contract Terms? 3 year with options for 2 one-year renewals.**
4. **Prebid question: Size project monetary-wise? The scope touches on what the dollar amounts would be. This contract would be used for anything under $4M.**
5. **Prebid question: List of anticipated projects. See list below of anticipated projects. This list is not all inclusive of potential projects, other projects may be assigned as needed.**
    - **Citywide stormwater collection system repairs and replacements (estimated > $1,000,000)**
    - **Citywide traffic signage replacements (estimated <$250,000)**
    - **Citywide pavement markings (estimated <$250,000)**
    - **Public Services operations yard expansion (estimated >$250,000 and <$500,000)**
    - **Coquina Way cul-de-sac improvements (<$250,000)**
    - **Fisherman's park hurricane damage rehabilitation (estimated >$250,000 and <$500,000)**
    - **Sunset park hurricane damage rehabilitation (estimated >$250,000 and <$500,000)**
    - **Gulf Way roadway rehabilitation (estimated > $2,000,000)**
    - **Belle Vista mini park improvements (estimated <$250,000)**
    - **1st Ave fishing pier hurricane damage repair (estimated <$250,000)**
    - **7th Ave fishing dock hurricane damage repair (estimated <$250,000)**
6. **Prebid question: There were questions regarding how contractors are selected if unit line items were being submitted in advance. Ms. Spain added that in the general contract terms, it states that submissions will be evaluated on capability, cost, and capacity to perform the specific line items requested. – Refer to II. Statement of Work, Part I: General Requirements, G. Work Assignments.**
7. **Will we split up projects (e.g. Seawalls and Parks)? – Multiple vendors may be selected per project depending on scope of work and vendors capabilities. Vendors are encouraged to submit unit prices for line items that they can perform or subcontract.**

155 Corey Avenue
St. Pete Beach, FL 33706-1839
www.stpetebeach.org

ADDENDUM 2

Civil On Call Construction Services

Issued 3/27/2026

*Sealed bids must be received by **9:00 AM on 04/08/2026** electronically via Bonfire. Bids received after the deadline will not be accepted. They will be publicly opened and read at **11:00 AM on 04/08/2026**. All bidders are invited to attend this bid Opening.*

Addendum 1 includes:

Questions and Answers

Questions and Answers:

1. **What class should the Round and Other-Elip/Arch pipe culvert be, class 3 or 4?** **The Round and Other-Elip/Arch pipe culvert bid items are listed as optional material pipe culverts and are not intended to specify a particular pipe class (e.g., Class III or Class IV) at the bid stage. The required pipe material and structural class, if applicable, will be determined by the City for each specific task order based on the project design, loading conditions, and applicable Florida Department of Transportation Standard Specifications.**

2. **Do the U-End walls need to be precast or cast in place?** **U-end walls may be precast or cast-in-place, as appropriate for the specific task order. The required type will be identified in the plans or directed by the City/Engineer for each assignment.**

3. **Are any inlets planned to be cast in place?** **Inlets may be precast or cast-in-place depending on site conditions and design requirements. This will be defined on a task order basis.**

4. **Will any of the end walls listed on the bid form have runs of pipe passing through them? If so, how many runs and at what skew?** **Some end walls may include pipe penetrations; however, the number of runs, pipe sizes, and skew angles (if any) will be determined by the design for each individual task order and shown in the applicable plans.**

5. **Please clarify how contract work will be assigned. The Statement of Work, Part I, Section 1, item G (Work Assignments) states that the City will obtain quotes from the Contractors who have a multiple-award contract. The City will already have contract pricing for each Contractor in the multiple-award contract, what is the criteria for these quotes?** **In the general contract terms, it states that submissions will be evaluated on capability, cost, and capacity to perform the specific line items requested.**

6. **Statement of Work, Part I, Section 15 states that Contractors must provide references for 5 work types in item E. If the Contractor does not intend to submit pricing for a work type, must that work type still be included in the project references?** **No, bidders shall provide references for applicable work types.**

7. **Please clarify the Period of Performance in the General Contract Terms. This states base scope target completion of January 2027 while other parts of the RFP specify a three year contract.** **3-year contract with 2 options for 1-year extensions. Ongoing work may be required.**

8. **Will any bonding be required?** **Yes, 5% of total bid amount.**

EXHIBIT "C"

Vendor Bid/Proposal

(Place Vendor's Bid/Proposal Behind this Page)

Ajax Paving
Industries of Florida, LLC

An Equal Opportunity Employer

One Ajax Drive • North Venice, FL 34275
Main: 941.486.3600 • Fax: 941.486.3500

SEALED BID

St. Pete Beach Civil On Call Construction Services 2026 - Civil On Call Construction Services

Submitted by:

Ajax Paving Industries of Florida, LLC

One Ajax Drive

North Venice, Florida 34275

941-486-3600

FLEstimate@ajaxpaving.com

Signature: _____

Christie Alvaro, Vice President of Estimating

City of St Pete Beach
Request for Proposal

Civil On Call Construction Services

Timeline	Date	Time
Publication of Bid	03/11/2026	8:00 AM
Pre-Bid Meeting	03/18/2026	10:00 AM
Deadline for Question Submission	03/25/2026	10:00 AM
Submittal Deadline electronically via Bonfire	04/08/2026	9:00 AM
Submittal Opening	04/08/2026	11:00 AM

Submittals are due on or before
04/08/2026 at 9:00 AM EST
Electronically Via Bonfire Only

155 Corey Avenue
St. Pete Beach, FL 33706-1839
www.stpetebeach.org

ADDENDUM 1

Civil On Call Construction Services

Issued 3/23/2026

*Sealed bids must be received by **9:00 AM on 04/08/2026** electronically via Bonfire. Bids received after the deadline will not be accepted. They will be publicly opened and read at **11:00 AM on 04/08/2026**. All bidders are invited to attend this bid Opening.*

Addendum 1 includes:

Pre-bid Minutes
Questions and Answers

Optional - Pre-Bid Meeting Minutes
RFP: Civil On Call Construction Services
March 18, 2026
10:00 AM

Staff Members Present:
Sara Spain, Procurement Manager
John Taylor, Assistant Finance Director
Camden Mills, Public Services Director
Dejan Milosevic, Project Manager
Michael Weaver, Infrastructure Operations Manager
Brian Gelock, Public Services
Kenneth Kosbab, Public Services
Ariana Wilson-Romo, Exec. Assistant City Clerk's Office

Others Present:

Name	***Company***	***Contact***
Abbey Boyle	PCS Civil	abbeyb@pcscivilinc.com
Bruno Sequeira	BCS Construction Group	Did not provide.
George Pappas	Southern Road & Bridge LLC	gpappas@southernrb.com
Tristan Hine	PCS Civil	tristanh@pcscivilinc.com
Dave Reid	Ajax Paving Industries of FL LLC	flestimate@ajaxpaving.com
Zachariah Wachalec	David Nelson Construction Co.	zwachalec@nelson-consturction.com

The meeting was called to order at 10:02 AM.

All attendees were present via Teams.

Ms. Spain briefly reviewed important dates and times which are as follows:
- Receipt of questions due 3/25 at 10AM
- Bids due 4/8 by 9AM
- Bid opening 4/8 at 11AM

She requested that any questions be submitted in writing to purchasing@stpetebeach.org. Questions will be answered via an addendum that will be posted to the City website and Bonfire.

Public Services Director Camden Mills stated that the City is seeking as-needed construction services for various capital projects and/or maintenance projects. Ms. Spain clarified that the City does anticipate awarding multiple vendors.

The following questions were asked:
Q: Contract terms? A: 3yr with options for two one-year renewals.
Q: Size project monetary-wise? A: The scope touches on what the dollar amounts would be. This contract would be used for anything under $4M. An addendum with anticipated projects can be posted.

There were questions regarding how contractors are selected if unit line items were being submitted in advance. Mr. Mills and Ms. Spain will clarify the contract language via an addendum. Ms. Spain added that in the general contract terms, it states that submissions will be evaluated on capability, cost, and capacity to perform the specific line items requested.
There being no additional questions, the meeting was adjourned at 10:16 AM.

Questions and Answers:

1. **Are there any plans available for the potential work needed? Or would you like us to provide the price for each line item on the bid form? – Plans are not yet available for the potential work needed. Please provide the unit price for each line item on the bid form that you're capable of performing or subcontracting.**
2. **On the bid form for the On-Call Civil Construction Services list, pay items 285701 through 285715, Optional Base Group 1 through Optional Base Group 15, are listed, but it does not specify which base option will be required. What base options are needed for each base group? – Base Groups 1-11: Graded aggregate based or crushed concrete, consisting of granitic material (minimum LBR 100). Base groups 12-15: Type B-12.5.**
3. **Prebid question: Contract Terms? 3 year with options for 2 one-year renewals.**
4. **Prebid question: Size project monetary-wise? The scope touches on what the dollar amounts would be. This contract would be used for anything under $4M.**
5. **Prebid question: List of anticipated projects. See list below of anticipated projects. This list is not all inclusive of potential projects, other projects may be assigned as needed.**
    - **Citywide stormwater collection system repairs and replacements (estimated > $1,000,000)**
    - **Citywide traffic signage replacements (estimated <$250,000)**
    - **Citywide pavement markings (estimated <$250,000)**
    - **Public Services operations yard expansion (estimated >$250,000 and <$500,000)**
    - **Coquina Way cul-de-sac improvements (<$250,000)**
    - **Fisherman's park hurricane damage rehabilitation (estimated >$250,000 and <$500,000)**
    - **Sunset park hurricane damage rehabilitation (estimated >$250,000 and <$500,000)**
    - **Gulf Way roadway rehabilitation (estimated > $2,000,000)**
    - **Belle Vista mini park improvements (estimated <$250,000)**
    - **1st Ave fishing pier hurricane damage repair (estimated <$250,000)**
    - **7th Ave fishing dock hurricane damage repair (estimated <$250,000)**
6. **Prebid question: There were questions regarding how contractors are selected if unit line items were being submitted in advance. Ms. Spain added that in the general contract terms, it states that submissions will be evaluated on capability, cost, and capacity to perform the specific line items requested. – Refer to II. Statement of Work, Part I: General Requirements, G. Work Assignments.**
7. **Will we split up projects (e.g. Seawalls and Parks)? – Multiple vendors may be selected per project depending on scope of work and vendors capabilities. Vendors are encouraged to submit unit prices for line items that they can perform or subcontract.**

155 Corey Avenue
St. Pete Beach, FL 33706-1839
www.stpetebeach.org

ADDENDUM 2

Civil On Call Construction Services

Issued 3/27/2026

*Sealed bids must be received by **9:00 AM on 04/08/2026** electronically via Bonfire. Bids received after the deadline will not be accepted. They will be publicly opened and read at **11:00 AM on 04/08/2026**. All bidders are invited to attend this bid Opening.*

Addendum 1 includes:

Questions and Answers

Questions and Answers:

1. **What class should the Round and Other-Elip/Arch pipe culvert be, class 3 or 4?** **The Round and Other-Elip/Arch pipe culvert bid items are listed as optional material pipe culverts and are not intended to specify a particular pipe class (e.g., Class III or Class IV) at the bid stage. The required pipe material and structural class, if applicable, will be determined by the City for each specific task order based on the project design, loading conditions, and applicable Florida Department of Transportation Standard Specifications.**

2. **Do the U-End walls need to be precast or cast in place?** **U-end walls may be precast or cast-in-place, as appropriate for the specific task order. The required type will be identified in the plans or directed by the City/Engineer for each assignment.**

3. **Are any inlets planned to be cast in place?** **Inlets may be precast or cast-in-place depending on site conditions and design requirements. This will be defined on a task order basis.**

4. **Will any of the end walls listed on the bid form have runs of pipe passing through them? If so, how many runs and at what skew?** **Some end walls may include pipe penetrations; however, the number of runs, pipe sizes, and skew angles (if any) will be determined by the design for each individual task order and shown in the applicable plans.**

5. **Please clarify how contract work will be assigned. The Statement of Work, Part I, Section 1, item G (Work Assignments) states that the City will obtain quotes from the Contractors who have a multiple-award contract. The City will already have contract pricing for each Contractor in the multiple-award contract, what is the criteria for these quotes?** **In the general contract terms, it states that submissions will be evaluated on capability, cost, and capacity to perform the specific line items requested.**

6. **Statement of Work, Part I, Section 15 states that Contractors must provide references for 5 work types in item E. If the Contractor does not intend to submit pricing for a work type, must that work type still be included in the project references?** **No, bidders shall provide references for applicable work types.**

7. **Please clarify the Period of Performance in the General Contract Terms. This states base scope target completion of January 2027 while other parts of the RFP specify a three year contract.** **3-year contract with 2 options for 1-year extensions. Ongoing work may be required.**

8. **Will any bonding be required?** **Yes, 5% of total bid amount.**

III. BID FORM

See attached Excel document.

Bid Form for City of St Pete Beach
On-Call Civil Construction Services
Request for Proposal

Specifications for the numbered pay items can be found in the current FDOT "Standard Specifications for Road and Bridge Construction".
Bid quantities are for comparison purposes only. This contract consists of various projects which are not yet defined and no quantities are guaranteed.

Pay Item No.	Item Description	Units	Est. Quantity	Unit Price	Amount
0101 1 (2501-5000)	MOBILIZATION (PER WORK ASSIGNMENT/LOCATION) - $2,501 TO $5,000	LS	1	$ 2,500.00	$2500.00
0101 1 (5501-25000)	MOBILIZATION (PER WORK ASSIGNMENT/LOCATION) - $5,001 TO $25,000	LS	1	$ 5,000.00	$5000.00
0101 1 (25001-50000)	MOBILIZATION (PER WORK ASSIGNMENT/LOCATION) - $25,001 TO $50,000	LS	1	$ 10,000.00	$10000.00
0101 1 (50001-150000)	MOBILIZATION (PER WORK ASSIGNMENT/LOCATION) - $50,001 TO $150,000	LS	1	$ 20,000.00	$20000.00
0101 1 (150001-250000)	MOBILIZATION (PER WORK ASSIGNMENT/LOCATION) - $150,001 TO $250,000	LS	1	$ 50,000.00	$50000.00
0101 1 (250001-350000)	MOBILIZATION (PER WORK ASSIGNMENT/LOCATION) - $250,001 TO $350,000	LS	1	$ 70,000.00	$70000.00
0101 1 (350001-500000)	MOBILIZATION (PER WORK ASSIGNMENT/LOCATION) - $350,001 to $500,000	LS	1	$ 100,000.00	$100000.00
0101 1 (500001+)	MOBILIZATION (PER WORK ASSIGNMENT/LOCATION) - $500,001 or more	LS	1	$ 200,000.00	$200000.00
0101 1 (2501-5000)	EMERGENCY MOBILIZATION (PER WORK ASSIGNMENT/LOCATION) - $2,501 TO $5,000	LS	1	$ 3,500.00	$3500.00
0101 1 (5501-25000)	EMERGENCY MOBILIZATION (PER WORK ASSIGNMENT/LOCATION) - $5,001 TO $25,000	LS	1	$ 7,500.00	$7500.00
0101 1 (25001-50000)	EMERGENCY MOBILIZATION (PER WORK ASSIGNMENT/LOCATION) - $25,001 TO $50,000	LS	1	$ 12,500.00	$12500.00
0101 1 (50001-150000)	EMERGENCY MOBILIZATION (PER WORK ASSIGNMENT/LOCATION) - $50,001 TO $150,000	LS	1	$ 35,000.00	$35000.00
0101 1 (150001-250000)	EMERGENCY MOBILIZATION (PER WORK ASSIGNMENT/LOCATION) - $150,001 TO $250,000	LS	1	$ 60,000.00	$60000.00
0102 1	MAINTENANCE OF TRAFFIC	Lump Sum (LS) cost to be assigned for each Task Order and shall not exceed 10% of the proposed construction cost.			
0102 3	COMMERCIAL MATERIAL FOR TEMPORARY DRIVEWAY MAINTENANCE	CY	50	$ 100.00	$5000.00
0102 14	TRAFFIC CONTROL OFFICER	HR	500	$ 135.00	$67500.00
0102 60	WORK ZONE SIGN	ED	6000	$ 0.50	$3000.00
0102 61	BUSINESS SIGN	EA	5	$ 200.00	$1000.00
0102 71 11	BARRIER WALL, TEMPORARY, F&I, CONCRETE	LF	200	$ 30.00	$6000.00
0102 71 13	BARRIER WALL, TEMPORARY, F&I, LOW PROFILE, CONCRETE	LF	200	$ 50.00	$10000.00
0102 71 14	BARRIER WALL, TEMPORARY, F&I, TYPE K	LF	200	$ 40.00	$8000.00
0102 71 21	BARRIER WALL, TEMPORARY, RELOCATE, CONCRETE	LF	200	$ 18.00	$3600.00
0102 71 23	BARRIER WALL, TEMPORARY, RELOCATE, LOW PROFILE, CONCRETE	LF	200	$ 18.00	$3600.00
0102 71 24	BARRIER WALL, TEMPORARY, RELOCATE, TYPE K	LF	200	$ 15.00	$3000.00

0102 73	TEMPORARY GUARDRAIL	LF	20	$ 100.00	$2000.00
0102 74 1	CHANNELIZING DEVICE- TYPES I, II, DI, VP, DRUM, OR LCD	ED	15000	$ 0.30	$4500.00
0102 74 2	CHANNELIZING DEVICE, TYPE III, 6'	ED	1000	$ 1.00	$1000.00
0102 74 7	CHANNELIZING DEVICE- PEDESTRIAN LCD (LONGITUDINAL CHANNELIZING DEVICE)	LF	1000	$ 3.50	$3500.00
0102 75 1	TEMPORARY SEPARATOR, F&I REMOVE	LF	500	$ 80.00	$40000.00
0102 75 2	TEMPORARY SEPARATOR, F&I REMAIN	LF	500	$ 80.00	$40000.00
0102 75 3	TEMPORARY SEPARATOR, INSTALL	LF	500	$ 80.00	$40000.00
0102 75 4	TEMPORARY SEPARATOR, RELOCATE	LF	500	$ 40.00	$20000.00
0102 75 5	TEMPORARY SEPARATOR, REMOVE	LF	500	$ 40.00	$20000.00
0102 76	ARROW BOARD / ADVANCE WARNING ARROW PANEL	ED	250	$ 25.00	$6250.00
0102 78	TEMPORARY RETROREFLECTIVE PAVEMENT MARKER	EA	50	$ 10.00	$500.00
0102 89 1	TEMPORARY CRASH CUSHION, REDIRECTIVE OPTION	LO	5	$ 2,000.00	$10000.00
0102 99	PORTABLE CHANGEABLE MESSAGE SIGN, TEMPORARY	ED	600	$ 50.00	$30000.00
0102 104	TEMPORARY SIGNALIZATION AND MAINTENANCE, INTERSECTION	ED	100	$ 50.00	$5000.00
0102 107 1	TEMPORARY TRAFFIC DETECTION AND MAINTENANCE, INTERSECTION	ED	100	$ 50.00	$5000.00
0102 150 1	PORTABLE REGULATORY SIGN	ED	50	$ 50.00	$2500.00
0102 150 2	RADAR SPEED DISPLAY UNIT	ED	50	$ 50.00	$2500.00
0102 911 1	PAVEMENT MARKING REMOVABLE TAPE, WHITE OR BLACK, SKIP	LF	500	$ 3.00	$1500.00
0102 911 2	PAVEMENT MARKING REMOVABLE TAPE, WHITE, BLACK, SOLID	LF	500	$ 5.00	$2500.00
0102 911 3	PAVEMENT MARKING REMOVABLE TAPE, WHITE OR BLACK, OTHER	SF	25	$ 25.00	$625.00
0102 912 1	PAVT MARKING REMOVABLE TAPE, YELLOW, SKIP	LF	500	$ 3.00	$1500.00
0102 912 2	PAVEMENT MARKING REMOVABLE TAPE, YELLOW, SOLID	LF	500	$ 5.00	$2500.00
0102 912 3	PAVEMENT MARKING REMOVABLE TAPE, YELLOW, OTHER	SF	25	$ 20.00	$500.00
0104 1	ARTIFICIAL COVERINGS /ROLLED EROSION CONTROL PRODUCTS	SY	150	$ 20.00	$3000.00
0104 10 3	SEDIMENT BARRIER	LF	5000	$ 6.00	$30000.00
0104 11	FLOATING TURBIDITY BARRIER	LF	100	$ 20.00	$2000.00
0104 12	STAKED TURBIDITY BARRIER- NYLON REINFORCED PVC	LF	100	$ 20.00	$2000.00
0104 13 1	STAKED SILT FENCE, TYPE III	LF	500	$ 5.00	$2500.00

0104 13 2	STAKED SILT FENCE, TYPE IV	LF	500	$ 7.00	$3500.00
0104 18	INLET PROTECTION SYSTEM	EA	100	$ 350.00	$35000.00
0107 1	LITTER REMOVAL	AC	10	$ 250.00	$2500.00
0107 2	MOWING	AC	10	$ 250.00	$2500.00
0110 2 1	CLEARING & GRUBBING	AC	10	$ 75,000.00	$750000.00
0110 3	REMOVAL OF EXISTING STRUCTURES/BRIDGES	SF	20	$ -	$0.00
0110 4 10	REMOVAL OF EXISTING CONCRETE	SY	2000	$ 100.00	$200000.00
0110 7 1	MAILBOX, F&I SINGLE	EA	5	$ 500.00	$2500.00
0120 1	REGULAR EXCAVATION	CY	3000	$ 100.00	$300000.00
0120 3	LATERAL DITCH EXCAVATION	CY	100	$ 200.00	$20000.00
0120 4	SUBSOIL EXCAVATION	CY	100	$ 200.00	$20000.00
0120 5	CHANNEL EXCAVATION	CY	100	$ 200.00	$20000.00
0120 6	EMBANKMENT	CY	500	$ 150.00	$75000.00
0121 70	FLOWABLE FILL	CY	50	$ 500.00	$25000.00
0125 1	EXCAVATION FOR STRUCTURES	CY	25	$ 1,000.00	$25000.00
0145 1	GEOSYNTHETIC REINFORCED SOIL SLOPE	SF	25	$ 30.00	$750.00
0160 4	TYPE B STABILIZATION	SY	7000	$ 50.00	$350000.00
0162 1 11	PREPARED SOIL LAYER-6" DEPTH	SY	50	$ 30.00	$1500.00
0162 1 12	PREPARED SOIL LAYER, FINISH SOIL LAYER, 12"	SY	50	$ 50.00	$2500.00
0162 1 21	PREPARED SOIL LAYER, ORGANIC SOIL LAYER, 6"	SY	50	$ 40.00	$2000.00
285701	OPTIONAL BASE, BASE GROUP 01	SY	100	$ 65.00	$6500.00
285702	OPTIONAL BASE, BASE GROUP 02	SY	100	$ 75.00	$7500.00
285703	OPTIONAL BASE, BASE GROUP 03	SY	100	$ 80.00	$8000.00
285704	OPTIONAL BASE, BASE GROUP 04	SY	1000	$ 85.00	$85000.00
285705	OPTIONAL BASE, BASE GROUP 05	SY	100	$ 90.00	$9000.00
285706	OPTIONAL BASE, BASE GROUP 06	SY	1000	$ 95.00	$95000.00
285707	OPTIONAL BASE, BASE GROUP 07	SY	100	$ 100.00	$10000.00
285708	OPTIONAL BASE, BASE GROUP 08	SY	1000	$ 120.00	$120000.00

285709	OPTIONAL BASE, BASE GROUP 09	SY	100	$ 135.00	$13500.00
285710	OPTIONAL BASE GROUP 10	SY	100	$ 140.00	$14000.00
285711	OPTIONAL BASE, BASE GROUP 11	SY	100	$ 155.00	$15500.00
285712	OPTIONAL BASE, BASE GROUP 12	SY	100	$ 165.00	$16500.00
285713	OPTIONAL BASE, BASE GROUP 13	SY	100	$ 175.00	$17500.00
285714	OPTIONAL BASE, BASE GROUP 14	SY	100	$ 185.00	$18500.00
285715	OPTIONAL BASE, BASE GROUP 15	SY	100	$ 200.00	$20000.00
0327 70 1	MILLING EXIST ASPH PAVT, 1" AVG DEPTH	SY	1000	$ 20.00	$20000.00
0327 70 2	MILLING EXIST ASPH PAVT, 3 1/2" AVG DEPTH	SY	200	$ 53.50	$10700.00
0327 70 3	MILLING EXIST ASPH PAVT, 4 1/2" AVG DEPTH	SY	200	$ 54.50	$10900.00
0327 70 4	MILLING EXIST ASPH PAVT, 3" AVG DEPTH	SY	200	$ 53.00	$10600.00
0327 70 5	MILLING EXIST ASPH PAVT, 2" AVG DEPTH	SY	200	$ 52.00	$10400.00
0327 70 6	MILLING EXIST ASPH PAVT, 1 1/2" AVG DEPTH	SY	5000	$ 16.50	$82500.00
0327 70 7	MILLING EXIST ASPH PAVT, 4" AVG DEPTH	SY	200	$ 54.00	$10800.00
0327 70 8	MILLING EXIST ASPH PAVT, 2 1/2" AVG DEPTH	SY	200	$ 52.50	$10500.00
0327 70 11	MILLING EXIST ASPH PAVT, 2 1/4" AVG DEPTH	SY	200	$ 52.25	$10450.00
0327 70 12	MILLING EXIST ASPH PAVT, 1 1/4" AVG DEPTH	SY	200	$ 51.25	$10250.00
0327 70 13	MILLING EXIST ASPH PAVT, 1 3/4" AVG DEPTH	SY	200	$ 51.75	$10350.00
0327 70 15	MILLING EXIST ASPH PAVT, 2 3/4" AVG DEPTH	SY	200	$ 52.75	$10550.00
0327 70 16	MILLING EXIST ASPH PAVT, 1/2" AVG DEPTH	SY	200	$ 50.50	$10100.00
0327 70 17	MILLING EXIST ASPH PAVT, 3 1/4" AVG DEPTH	SY	200	$ 53.25	$10650.00
0327 70 19	MILLING EXIST ASPH PAVT, 3/4" AVG DEPTH	SY	200	$ 50.75	$10150.00
0327 70 20	MILLING EXIST ASPH PAVT, 3 3/4" AVG DEPTH	SY	200	$ 53.75	$10750.00
0334 1 12 (1-99)	SUPERPAVE ASPHALTIC CONC, TRAFFIC B, 1-99 TONS	TN	50	$ 575.00	$28750.00
0334 1 12 (100-199)	SUPERPAVE ASPHALTIC CONC, TRAFFIC B, 100 - 199 TONS	TN	150	$ 335.00	$50250.00
0334 1 12 (200-300)	SUPERPAVE ASPHALTIC CONC, TRAFFIC B, 200 - 300 TONS	TN	250	$ 320.00	$80000.00
0334 1 12 (300+)	SUPERPAVE ASPHALTIC CONC, TRAFFIC B, 300 TONS OR MORE	TN	350	$ 305.00	$106750.00
0334 1 13 (1-99)	SUPERPAVE ASPHALTIC CONC, TRAFFIC C 1 - 99 TONS	TN	50	$ 575.00	$28750.00

0334 1 13 (100-199)	SUPERPAVE ASPHALTIC CONC, TRAFFIC C 100 - 199 TONS	TN	150	$ 335.00	$50250.00
0334 1 13 (200-300)	SUPERPAVE ASPHALTIC CONC, TRAFFIC C 200 -300 TONS	TN	250	$ 320.00	$80000.00
0334 1 13 (300+)	SUPERPAVE ASPHALTIC CONC, TRAFFIC C 300 TONS OR MORE	TN	350	$ 305.00	$106750.00
0334 1 52 (0-99)	SUPERPAVE ASPHALTIC CONCRETE, TRAFFIC B, PG76-22 0-99 TONS	TN	50	$ 585.00	$29250.00
0334 1 52 (100-199)	SUPERPAVE ASPHALTIC CONCRETE, TRAFFIC B, PG76-22 100-199 TONS	TN	150	$ 345.00	$51750.00
0334 1 52 (200-300)	SUPERPAVE ASPHALTIC CONCRETE, TRAFFIC B, PG76-22 200-300 TONS	TN	250	$ 340.00	$85000.00
0334 1 52 (300+)	SUPERPAVE ASPHALTIC CONCRETE, TRAFFIC B, PG76-22 300 TONS OR MORE	TN	350	$ 315.00	$110250.00
0334 1 53 (0-99)	SUPERPAVE ASPHALTIC CONCRETE, TRAFFIC C, PG76-22 0-99 TONS	TN	50	$ 585.00	$29250.00
0334 1 53 (100-199)	SUPERPAVE ASPHALTIC CONCRETE, TRAFFIC C, PG76-22 100-199 TONS	TN	150	$ 345.00	$51750.00
0334 1 53 (200-300)	SUPERPAVE ASPHALTIC CONCRETE, TRAFFIC C, PG76-22 200-300 TONS	TN	250	$ 330.00	$82500.00
0334 1 53 (300+)	SUPERPAVE ASPHALTIC CONCRETE, TRAFFIC C, PG76-22 300 TONS OR MORE	TN	350	$ 315.00	$110250.00
0334 1 54 (0-99)	SUPERPAVE ASPHALTIC CONCRETE, TRAFFIC D, PG76-22 0-99 TONS	TN	50	$ 590.00	$29500.00
0334 1 54 (100-199)	SUPERPAVE ASPHALTIC CONCRETE, TRAFFIC D, PG76-22 100-199 TONS	TN	150	$ 350.00	$52500.00
0334 1 54 (200-300)	SUPERPAVE ASPHALTIC CONCRETE, TRAFFIC D, PG76-22 200-300 TONS	TN	250	$ 335.00	$83750.00
0334 1 54 (300+)	SUPERPAVE ASPHALTIC CONCRETE, TRAFFIC D, PG76-22 300 TONS OR MORE	TN	350	$ 320.00	$112000.00
0334 1 56 (1-99)	SUPERPAVE ASPHALTIC CONCRETE, TRAFFIC B, HIGH POLYMER 0-99 TONS	TN	50	$ 665.00	$33250.00
0334 1 56 (100-199)	SUPERPAVE ASPHALTIC CONCRETE, TRAFFIC B, HIGH POLYMER 100-199 TONS	TN	150	$ 420.00	$63000.00
0334 1 56 (200-300)	SUPERPAVE ASPHALTIC CONCRETE, TRAFFIC B, HIGH POLYMER 200-300 TONS	TN	250	$ 405.00	$101250.00
0334 1 56 (300+)	SUPERPAVE ASPHALTIC CONCRETE, TRAFFIC B, HIGH POLYMER 300 TONS OR MORE	TN	350	$ 395.00	$138250.00
0334 1 57 (0-99)	SUPERPAVE ASPHALTIC CONCRETE, TRAFFIC C, HIGH POLYMER 0-99 TONS	TN	50	$ 665.00	$33250.00
0334 1 57 (100-199)	SUPERPAVE ASPHALTIC CONCRETE, TRAFFIC C, HIGH POLYMER 100-199 TONS	TN	150	$ 420.00	$63000.00
0334 1 57 (200-300)	SUPERPAVE ASPHALTIC CONCRETE, TRAFFIC C, HIGH POLYMER 200-300 TONS	TN	250	$ 405.00	$101250.00
0334 1 57 (300+)	SUPERPAVE ASPHALTIC CONCRETE, TRAFFIC C, HIGH POLYMER 300 TONS OR MORE	TN	350	$ 395.00	$138250.00
0334 1 58 (0-99)	SUPERPAVE ASPHALTIC CONCRETE, TRAFFIC D, HIGH POLYMER 0-99 TONS	TN	50	$ 675.00	$33750.00
0334 1 58 (100-199)	SUPERPAVE ASPHALTIC CONCRETE, TRAFFIC D, HIGH POLYMER 100-199 TONS	TN	150	$ 430.00	$64500.00
0334 1 58 (200-300)	SUPERPAVE ASPHALTIC CONCRETE, TRAFFIC D, HIGH POLYMER 200-300 TONS	TN	250	$ 415.00	$103750.00
0334 1 58 (300+)	SUPERPAVE ASPHALTIC CONCRETE, TRAFFIC D, HIGH POLYMER 300 TONS OR MORE	TN	350	$ 405.00	$141750.00
0337 7 80 (0-99)	ASPHALT CONCRETE FRICTION COURSE,TRAFFIC B, FC-9.5, PG 76-22 0-99 TONS	TN	50	$ 595.00	$29750.00

0337 7 80 (100-199)	ASPHALT CONCRETE FRICTION COURSE,TRAFFIC B, FC-9.5, PG 76-22 100-199 TONS	TN	150	$ 390.00	$58500.00
0337 7 80 (200-300)	ASPHALT CONCRETE FRICTION COURSE,TRAFFIC B, FC-9.5, PG 76-22 200-300 TONS	TN	250	$ 380.00	$95000.00
0337 7 80 (300+)	ASPHALT CONCRETE FRICTION COURSE,TRAFFIC B, FC-9.5, PG 76-22 300 TONS OR MORE	TN	350	$ 290.00	$101500.00
0337 7 81 (0-99)	ASPHALT CONCRETE FRICTION COURSE,TRAFFIC B, FC-12.5, PG 76-22 0-99 TONS	TN	50	$ 590.00	$29500.00
0337 7 81 (100-199)	ASPHALT CONCRETE FRICTION COURSE,TRAFFIC B, FC-12.5, PG 76-22 100-199 TONS	TN	150	$ 385.00	$57750.00
0337 7 81 (200-300)	ASPHALT CONCRETE FRICTION COURSE,TRAFFIC B, FC-12.5, PG 76-22 200-300 TONS	TN	250	$ 385.00	$96250.00
0337 7 81 (300+)	ASPHALT CONCRETE FRICTION COURSE,TRAFFIC B, FC-12.5, PG 76-22 300 TONS OR MORE	TN	350	$ 285.00	$99750.00
0337 7 82 (0-99)	ASPHALT CONCRETE FRICTION COURSE,TRAFFIC C, FC-9.5, PG 76-22 0-99 TONS	TN	50	$ 595.00	$29750.00
0337 7 82 (100-199)	ASPHALT CONCRETE FRICTION COURSE,TRAFFIC C, FC-9.5, PG 76-22 100-199 TONS	TN	150	$ 390.00	$58500.00
0337 7 82 (200-300)	ASPHALT CONCRETE FRICTION COURSE,TRAFFIC C, FC-9.5, PG 76-22 200-300 TONS	TN	250	$ 380.00	$95000.00
0337 7 82 (300+)	ASPHALT CONCRETE FRICTION COURSE,TRAFFIC C, FC-9.5, PG 76-22 300 TONS OR MORE	TN	350	$ 290.00	$101500.00
0337 7 83 (0-99)	ASPHALT CONCRETE FRICTION COURSE,TRAFFIC C, FC-12.5, PG 76-22 0-99 TONS	TN	50	$ 590.00	$29500.00
0337 7 83 (100-199)	ASPHALT CONCRETE FRICTION COURSE,TRAFFIC C, FC-12.5, PG 76-22 100-199 TONS	TN	150	$ 385.00	$57750.00
0337 7 83 (200-300)	ASPHALT CONCRETE FRICTION COURSE,TRAFFIC C, FC-12.5, PG 76-22 200-300 TONS	TN	250	$ 375.00	$93750.00
0337 7 83 (300+)	ASPHALT CONCRETE FRICTION COURSE,TRAFFIC C, FC-12.5, PG 76-22 300 TONS OR MORE	TN	350	$ 285.00	$99750.00
0337 7 85 (0-99)	ASPHALT CONCRETE FRICTION COURSE,TRAFFIC D, FC-12.5, PG 76-22 0-99 TONS	TN	50	$ 590.00	$29500.00
0337 7 85 (100-199)	ASPHALT CONCRETE FRICTION COURSE,TRAFFIC D, FC-12.5, PG 76-22 100-199 TONS	TN	150	$ 395.00	$59250.00
0337 7 85 (200-300)	ASPHALT CONCRETE FRICTION COURSE,TRAFFIC D, FC-12.5, PG 76-22 200-300 TONS	TN	250	$ 385.00	$96250.00
0337 7 85 (300+)	ASPHALT CONCRETE FRICTION COURSE,TRAFFIC D, FC-12.5, PG 76-22 300 TONS OR MORE	TN	350	$ 295.00	$103250.00
0337 7 90 (0-99)	ASPHALT CONCRETE FRICTION COURSE,TRAFFIC B, FC-9.5, HIGH POLYMER 0-99 TONS	TN	50	$ 690.00	$34500.00
0337 7 90 (100-199)	ASPHALT CONCRETE FRICTION COURSE,TRAFFIC B, FC-9.5, HIGH POLYMER 100-199 TONS	TN	150	$ 495.00	$74250.00
0337 7 90 (200-300)	ASPHALT CONCRETE FRICTION COURSE,TRAFFIC B, FC-9.5, HIGH POLYMER 200-300 TONS	TN	250	$ 485.00	$121250.00
0337 7 90 (300+)	ASPHALT CONCRETE FRICTION COURSE,TRAFFIC B, FC-9.5, HIGH POLYMER 300 TONS OR MORE	TN	350	$ 390.00	$136500.00
0337 7 93 (0-99)	ASPHALT CONCRETE FRICTION COURSE,TRAFFIC C, FC-12.5, HIGH POLYMER 0-99 TONS	TN	50	$ 680.00	$34000.00
0337 7 93 (100-199)	ASPHALT CONCRETE FRICTION COURSE,TRAFFIC C, FC-12.5, HIGH POLYMER 100-199 TONS	TN	150	$ 480.00	$72000.00
0337 7 93 (200-300)	ASPHALT CONCRETE FRICTION COURSE,TRAFFIC C, FC-12.5, HIGH POLYMER 200-300 TONS	TN	250	$ 470.00	$117500.00
0337 7 93 (300+)	ASPHALT CONCRETE FRICTION COURSE,TRAFFIC C, FC-12.5, HIGH POLYMER 300 TONS OR MORE	TN	350	$ 375.00	$131250.00
0337 7 94 (0-99)	ASPHALT CONCRETE FRICTION COURSE,TRAFFIC D, FC-12.5, HIGH POLYMER 0-99 TONS	TN	50	$ 680.00	$34000.00

0337 7 94 (100-199)	ASPHALT CONCRETE FRICTION COURSE,TRAFFIC D, FC-12.5, HIGH POLYMER 100-199 TONS	TN	150	$ 480.00	$72000.00
0337 7 94 (200-300)	ASPHALT CONCRETE FRICTION COURSE,TRAFFIC D, FC-12.5, HIGH POLYMER 200-300 TONS	TN	250	$ 470.00	$117500.00
0337 7 94 (300+)	ASPHALT CONCRETE FRICTION COURSE,TRAFFIC D, FC-12.5, HIGH POLYMER 300 TONS OR MORE	TN	350	$ 375.00	$131250.00
0339 1	MISCELLANEOUS ASPHALT PAVEMENT	TN	25	$ 1,500.00	$37500.00
0350 3 5	PLAIN CEMENT CONCRETE PAVEMENT, 8"	SY	100		$0.00
0350 3 9	PLAIN CEMENT CONCRETE PAVEMENT, 10"	SY	100		$0.00
0350 3 13	PLAIN CEMENT CONCRETE PAVEMENT, 12"	SY	100		$0.00
0350 5	CLEANING & SEALING JOINTS- CONCRETE PAVEMENT:	LF	100		$0.00
0350 30 13	CONCRETE PAVEMENT FOR ROUNDABOUT APRON, 12" DEPTH	SY	100		$0.00
0352 70	GRINDING CONCRETE PAVEMENT	SY	100	$ -	$0.00
0400 0 11	CONCRETE CLASS NS, GRAVITY WALL	CY	10	$ 4,500.00	$45000.00
0400 1 2	CONCRETE CLASS I, ENDWALLS	CY	10	$ 5,000.00	$50000.00
0400 1 11	CONCRETE CLASS I, RETAINING WALLS	CY	10	$ 6,000.00	$60000.00
0400 2 1	CONCRETE CLASS II, CULVERTS	CY	10	$ -	$0.00
0400 2 2	CONCRETE CLASS II, ENDWALLS	CY	10	$ -	$0.00
0400 2 5	CONCRETE CLASS II, BRIDGE SUBSTRUCTURE	CY	10	$ -	$0.00
0400 2 11	CONCRETE CLASS II, RETAINING WALLS	CY	10	$ -	$0.00
0400 3 1	CONCRETE CLASS III, CULVERTS	CY	10	$ -	$0.00
0400 3 8	CONCRETE CLASS III, BULKHEAD	CY	10	$ -	$0.00
0400 4 1	CONCRETE CLASS IV, CULVERTS	CY	10	$ -	$0.00
0400 4 2	CONCRETE CLASS IV, ENDWALLS	CY	10	$ -	$0.00
0400 4 5	CONCRETE CLASS IV, BRIDGE SUBSTRUCTURE	CY	10	$ -	$0.00
0400 4 11	CONC CLASS IV, RETAINING WALLS	CY	10	$ -	$0.00
0400 145	CLEANING CONCRETE SURFACE	SF	20	$ -	$0.00
0401 70 1	RESTORE SPALLED AREAS, EPOXY	CF	10	$ -	$0.00
0401 70 4	RESTORE SPALLED AREAS, PORTLAND CEMENT GROUT	CF	10	$ -	$0.00
0401 70 5	RESTORE SPALLED AREAS, CONTRACTORS OPTION	CF	10	$ -	$0.00
0411 1	EPOXY MATERIAL FOR CRACK INJECTION- STRUCTURES REHAB	GA	10	$ -	$0.00

0411 2	CRACKS INJECT & SEAL- STRUCTURES REHAB	LF	25	$ -	$0.00
413-149	PENETRANT SEALER	GA	10	$ -	$0.00
413-154	CLEANING & SEALING CONCRETE SURFACES- PENETRANT SEALER OR METHACRYLATES	SF	25	$ -	$0.00
0415 1 1	REINFORCING STEEL- ROADWAY	LB	100	$ -	$0.00
0415 1 3	REINFORCING STEEL- RETAINING WALL	LB	100	$ -	$0.00
0415 1 5	REINFORCING STEEL- BRIDGE SUBSTRUCTURE	LB	100	$ -	$0.00
0415 1 6	REINFORCING STEEL- MISCELLANEOUS	LB	100	$ -	$0.00
0415 1 8	REINFORCING STEEL- BULKHEAD	LB	100	$ -	$0.00
0425 1201	INLETS, CURB, TYPE 9, <10'	EA	3	$ -	$0.00
0425 1202	INLETS, CURB, TYPE 9, >10'	EA	3	$ -	$0.00
0425 1203	INLETS, CURB, TYPE 9, J BOT, <10'	EA	3	$ -	$0.00
0425 1204	INLETS, CURB, TYPE 9, J BOT, >10'	EA	3	$ -	$0.00
0425 1205	INLETS, CURB, TYPE 9, PARTIAL	EA	3	$ -	$0.00
0425 1209	INLETS, CURB, TYPE 9, MODIFY	EA	3	$ -	$0.00
0425 1211	INLETS, CURB, TYPE 10, <10'	EA	3	$ -	$0.00
0425 1212	INLETS, CURB, TYPE 10, >10'	EA	3	$ -	$0.00
0425 1213	INLETS, CURB, TYPE 10, J BOT <10'	EA	3	$ -	$0.00
0425 1214	INLETS, CURB, TYPE 10, J BOT >10'	EA	3	$ -	$0.00
0425 1215	INLETS, CURB, TYPE 10, PARTIAL	EA	3	$ -	$0.00
0425 1311	INLETS, CURB, TYPE P-1, <10'	EA	3	$ -	$0.00
0425 1312	INLETS, CURB TYPE P-1, >10'	EA	3	$ -	$0.00
0425 1315	INLETS, CURB TYPE P-1, PARTIAL	EA	3	$ -	$0.00
0425 1319	INLETS, CURB TYPE P-1, MODIFY	EA	3	$ -	$0.00
0425 1321	INLETS, CURB, TYPE P-2, <10'	EA	3	$ -	$0.00
0425 1322	INLETS, CURB, TYPE P-2, >10'	EA	3	$ -	$0.00
0425 1325	INLETS, CURB, TYPE P-2, PARTIAL	EA	3	$ -	$0.00
0425 1329	INLETS, CURB TYPE P-2, MODIFY	EA	3	$ -	$0.00
0425 1331	INLETS, CURB, TYPE P-3, <10'	EA	3	$ -	$0.00

0425 1332	INLETS, CURB. TYPE P-3, >10'	EA	3	$ -	$0.00
0425 1335	INLETS, CURB, TYPE P-3, PARTIAL	EA	3	$ -	$0.00
0425 1341	INLETS, CURB, TYPE P-4, <10'	EA	3	$ -	$0.00
0425 1342	INLETS, CURB, TYPE P-4, >10'	EA	3	$ -	$0.00
0425 1345	INLETS, CURB, TYPE P-4, PARTIAL	EA	3	$ -	$0.00
0425 1349	INLETS, CURB, TYPE P-4, MODIFY	EA	3	$ -	$0.00
0425 1351	INLETS, CURB, TYPE P-5, <10'	EA	3	$ -	$0.00
0425 1352	INLETS, CURB, TYPE P-5, >10'	EA	3	$ -	$0.00
0425 1355	INLETS, CURB, TYPE P-5, PARTIAL	EA	3	$ -	$0.00
0425 1359	INLETS, CURB, TYPE P-5, MODIFY	EA	3	$ -	$0.00
0425 1361	INLETS, CURB, TYPE P-6, <10'	EA	3	$ -	$0.00
0425 1362	INLETS, CURB, TYPE P-6, >10'	EA	3	$ -	$0.00
0425 1365	INLETS, CURB, TYPE P-6, PARTIAL	EA	3	$ -	$0.00
0425 1369	INLETS, CURB, TYPE P-6, MODIFY	EA	3	$ -	$0.00
0425 1411	INLETS, CURB TYPE J-1, <10'	EA	3	$ -	$0.00
0425 1412	INLETS, CURB, TYPE J-1, >10'	EA	3	$ -	$0.00
0425 1415	INLETS, CURB, TYPE J-1, PARTIAL	EA	3	$ -	$0.00
0425 1419	INLETS, CURB, TYPE J-1, MODIFY	EA	3	$ -	$0.00
0425 1421	INLETS, CURB, TYPE J-2, <10'	EA	3	$ -	$0.00
0425 1422	INLETS, CURB, TYPE J-2, >10'	EA	3	$ -	$0.00
0425 1425	INLETS, CURB, TYPE J-2, PARTIAL	EA	3	$ -	$0.00
0425 1429	INLETS, CURB, TYPE J-2, MODIFY	EA	3	$ -	$0.00
0425 1431	INLETS, CURB, TYPE J-3, <10'	EA	3	$ -	$0.00
0425 1432	INLETS, CURB, TYPE J-3, >10'	EA	3	$ -	$0.00
0425 1435	INLETS, CURB, TYPE J-3, PARTIAL	EA	3	$ -	$0.00
0425 1441	INLETS, CURB, TYPE J-4, <10'	EA	3	$ -	$0.00
0425 1442	INLETS, CURB, TYPE J-4, >10'	EA	3	$ -	$0.00
0425 1445	INLETS, CURB, TYPE J-4, PARTIAL	EA	3	$ -	$0.00

0425 1451	INLETS, CURB, TYPE J-5, <10'	EA	3	$ -	$0.00
0425 1452	INLETS, CURB, TYPE J-5, >10'	EA	3	$ -	$0.00
0425 1455	INLETS, CURB, TYPE J-5, PARTIAL	EA	3	$ -	$0.00
0425 1459	INLETS, CURB, TYPE J-5, MODIFY	EA	3	$ -	$0.00
0425 1461	INLETS, CURB, TYPE J-6, <10'	EA	3	$ -	$0.00
0425 1462	INLETS, CURB, TYPE J-6, >10'	EA	3	$ -	$0.00
0425 1465	INLETS, CURB, TYPE J-6, PARTIAL	EA	3	$ -	$0.00
0425 1469	INLETS, CURB, TYPE J-6, MODIFY	EA	3	$ -	$0.00
0425 1471	INLETS, CURB, TYPE 7, <10'	EA	3	$ -	$0.00
0425 1472	INLETS, CURB, TYPE 7, >10'	EA	3	$ -	$0.00
0425 1473	INLETS, CURB, TYPE 7, J BOT , <10'	EA	3	$ -	$0.00
0425 1474	INLETS, CURB, TYPE 7, J BOT ,>10'	EA	3	$ -	$0.00
0425 1475	INLETS, CURB, TYPE 7, PARTIAL	EA	3	$ -	$0.00
0425 1479	INLETS, CURB, TYPE 7, MODIFY	EA	3	$ -	$0.00
0425 1481	INLETS, CURB, TYPE 8, <10'	EA	3	$ -	$0.00
0425 1483	INLETS, CURB, TYPE 8, J BOT , <10'	EA	3	$ -	$0.00
0425 1484	INLETS, CURB, TYPE 8, J BOT ,>10'	EA	3	$ -	$0.00
0425 1485	INLETS, CURB, TYPE 8, PARTIAL	EA	3	$ -	$0.00
0425 1489	INLETS, CURB, TYPE 8, MODIFY	EA	3	$ -	$0.00
0425 1501	INLETS, DT BOT, TYPE A, <10'	EA	3	$ -	$0.00
0425 1502	INLETS, DT BOT, TYPE A, >10'	EA	3	$ -	$0.00
0425 1503	INLETS, DT BOT, TYPE A, J BOT, <10'	EA	3	$ -	$0.00
0425 1504	INLETS, DT BOT, TYPE A, J BOT, >10'	EA	3	$ -	$0.00
0425 1505	INLETS, DT BOT, TYPE A, PARTIAL	EA	3	$ -	$0.00
0425 1511	INLETS, DT BOT, TYPE B, <10'	EA	3	$ -	$0.00
0425 1512	INLETS, DT BOT, TYPE B, >10'	EA	3	$ -	$0.00
0425 1513	INLETS, DT BOT, TYPE B, J BOT, <10'	EA	3	$ -	$0.00
0425 1514	INLETS, DT BOT, TYPE B, J BOT, >10'	EA	3	$ -	$0.00

0425 1515	INLETS, DT BOT, TYPE B, PARTIAL	EA	3	$ -	$0.00
0425 1519	INLETS, DT BOT, TYPE B, MODIFY	EA	3	$ -	$0.00
0425 1521	INLETS, DT BOT, TYPE C,<10'	EA	3	$ -	$0.00
0425 1522	INLETS, DT BOT, TYPE C,>10'	EA	3	$ -	$0.00
0425 1523	INLETS, DT BOT, TYPE C,JBOT, <10'	EA	3	$ -	$0.00
0425 1524	INLETS, DT BOT, TYPE C, JBOT, >10'	EA	3	$ -	$0.00
0425 1525	INLETS, DITCH BOTTOM, TYPE C, PARTIAL	EA	3	$ -	$0.00
0425 1529	INLETS, DT BOT, TYPE C, MODIFY	EA	3	$ -	$0.00
0425 1531	INLETS, DITCH BOTTOM, TYPE C MODIFIED- BACK OF SIDEWALK, <10'	EA	3	$ -	$0.00
0425 1532	INLETS, DITCH BOTTOM, TYPE C MODIFIED- BACK OF SIDEWALK, >10'	EA	3	$ -	$0.00
0425 1533	INLETS, DITCH BOTTOM TYPE C MODIFIED- BACK OF SIDEWALK, J BOT, <10'	EA	3	$ -	$0.00
0425 1534	INLETS, DITCH BOTTOM, TYPE C MODIFIED- BACK OF SIDEWALK, J BOT, >10'	EA	3	$ -	$0.00
0425 1535	INLETS, DITCH BOTTOM TYPE C MODIFIED- BACK OF SIDEWALK, PARTIAL	EA	3	$ -	$0.00
0425 1541	INLETS, DT BOT, TYPE D, <10'	EA	3	$ -	$0.00
0425 1542	INLETS, DT BOT, TYPE D, >10'	EA	3	$ -	$0.00
0425 1543	INLETS, DITCH BOTTOM, TYPE D, J BOT, <10'	EA	3	$ -	$0.00
0425 1544	INLETS, DITCH BOTTOM, TYPE D, J BOT, >10'	EA	3	$ -	$0.00
0425 1545	INLETS, DITCH BOTTOM, TYPE D, PARTIAL	EA	3	$ -	$0.00
0425 1549	INLETS, DT BOT, TYPE D, MODIFY	EA	3	$ -	$0.00
0425 1551	INLETS, DT BOT, TYPE E, <10'	EA	3	$ -	$0.00
0425 1552	INLETS, DT BOT, TYPE E, >10'	EA	3	$ -	$0.00
0425 1553	INLETS, DT BOT, TYPE E, J BOT, <10'	EA	3	$ -	$0.00
0425 1554	INLETS, DT BOT, TYPE E, J BOT, >10'	EA	3	$ -	$0.00
0425 1555	INLETS, DT BOT, TYPE E, PARTIAL	EA	3	$ -	$0.00
0425 1559	INLETS, DT BOT, TYPE E, MODIFY	EA	3	$ -	$0.00
0425 1561	INLETS, DT BOT, TYPE F, <10'	EA	3	$ -	$0.00
0425 1562	INLETS, DT BOT, TYPE F, >10'	EA	3	$ -	$0.00
0425 1563	INLETS, DITCH BOTTOM, TYPE F, J BOT, <10'	EA	3	$ -	$0.00

0425 1564	INLETS, DITCH BOTTOM, TYPE F, J BOT, >10'	EA	3	$ -	$0.00
0425 1565	INLETS, DITCH BOTTOM, TYPE F, PARTIAL	EA	3	$ -	$0.00
0425 1569	INLETS, DITCH BOTTOM, TYPE F, MODIFY	EA	3	$ -	$0.00
0425 1571	INLETS, DITCH BOTTOM, TYPE G, <10'	EA	3	$ -	$0.00
0425 1572	INLETS, DITCH BOTTOM, TYPE G, >10'	EA	3	$ -	$0.00
0425 1573	INLETS, DITCH BOTTOM, TYPE G, J BOT, <10'	EA	3	$ -	$0.00
0425 1574	INLETS, DITCH BOTTOM, TYPE G, J BOT, >10'	EA	3	$ -	$0.00
0425 1575	INLETS, DITCH BOTTOM, TYPE G, PARTIAL	EA	3	$ -	$0.00
0425 1579	INLETS, DITCH BOTTOM, TYPE G, MODIFY	EA	3	$ -	$0.00
0425 1581	INLETS, DT BOT, TYPE H, <10'	EA	3	$ -	$0.00
0425 1582	INLETS, DT BOT, TYPE H, >10'	EA	3	$ -	$0.00
0425 1583	INLETS, DT BOT, TYPE H, J BOTTOM <10'	EA	3	$ -	$0.00
0425 1584	INLETS, DT BOT, TYPE H, J BOTTOM >10'	EA	3	$ -	$0.00
0425 1585	INLETS, DT BOT, TYPE H, PARTIAL	EA	3	$ -	$0.00
0425 1589	INLETS, DT BOT, TYPE H, MODIFY	EA	3	$ -	$0.00
0425 1601	INLETS, DT BOT, TYPE J, <10'	EA	3	$ -	$0.00
0425 1602	INLETS, DT BOT, TYPE J, >10'	EA	3	$ -	$0.00
0425 1603	INLETS, DT BOT, TYPE J, J BOT, <10'	EA	3	$ -	$0.00
0425 1604	INLETS, DT BOT, TYPE J, JBOT,>10'	EA	3	$ -	$0.00
0425 1605	INLETS, DT BOT, TYPE J, PARTIAL	EA	3	$ -	$0.00
0425 1609	INLETS, DT BOT, TYPE J, MODIFY	EA	3	$ -	$0.00
0425 1611	INLETS, DITCH BOTTOM, TYPE K, <10'	EA	3	$ -	$0.00
0425 1619	INLETS, DITCH BOTTOM, TYPE K, J BOTTOM, MODIFY	EA	3	$ -	$0.00
0425 1701	INLETS, GUTTER, TYPE S, <10'	EA	3	$ -	$0.00
0425 1702	INLETS, GUTTER, TYPE S, >10'	EA	3	$ -	$0.00
0425 1703	INLETS, GUTTER, TYPE S, J BOTTOM <10'	EA	3	$ -	$0.00
0425 1704	INLETS, GUTTER, TYPE S, J BOTTOM, >10'	EA	3	$ -	$0.00
0425 1705	INLETS, GUTTER, TYPE S, PARTIAL	EA	3	$ -	$0.00

0425 1711	INLETS, GUTTER, TYPE V, <10'	EA	3	$ -	$0.00
0425 1712	INLETS, GUTTER, TYPE V, >10'	EA	3	$ -	$0.00
0425 1713	INLETS, GUTTER, TYPE V, J BOT, <10'	EA	3	$ -	$0.00
0425 1714	INLETS, GUTTER, TYPE V, J BOTTOM, >10'	EA	3	$ -	$0.00
0425 1715	INLETS, GUTTER, TYPE V, PARTIAL	EA	3	$ -	$0.00
0425 1719	INLETS, GUTTER, TYPE V, MODIFY	EA	3	$ -	$0.00
0425 1910	INLETS, CLOSED FLUME	EA	3	$ -	$0.00
0425 2 41	MANHOLES, P-7, <10'	EA	3	$ -	$0.00
0425 2 42	MANHOLES, P-7, >10'	EA	3	$ -	$0.00
0425 2 43	MANHOLES, P-7, PARTIAL	EA	3	$ -	$0.00
0425 2 61	MANHOLES, P-8, <10'	EA	3	$ -	$0.00
0425 2 62	MANHOLES, P-8, >10'	EA	3	$ -	$0.00
0425 2 63	MANHOLES, P-8, PARTIAL	EA	3	$ -	$0.00
0425 2 71	MANHOLES, J-7, <10'	EA	3	$ -	$0.00
0425 2 72	MANHOLES, J-7, >10'	EA	3	$ -	$0.00
0425 2 73	MANHOLES, J-7, PARTIAL	EA	3	$ -	$0.00
0425 2 91	MANHOLES, J-8, <10'	EA	3	$ -	$0.00
0425 2 92	MANHOLES, J-8, >10'	EA	3	$ -	$0.00
0425 2 93	MANHOLES, J-8, PARTIAL	EA	3	$ -	$0.00
0425 2110	MANHOLES, REPAIR	EA	3	$ -	$0.00
0425 3 41	JUNCTION BOX, DRAINAGE, P-7, <10'	EA	3	$ -	$0.00
0425 3 42	JUNCTION BOXES, P-7, >10'	EA	3	$ -	$0.00
0425 3 43	JUNCTION BOX, DRAINAGE, P-7, PARTIAL	EA	3	$ -	$0.00
0425 3 50	JUNCTION BOX, DRAINAGE, REPAIR	EA	3	$ -	$0.00
0425 3 61	JUNCTION BOXES, J-7, <10'	EA	3	$ -	$0.00
0425 3 62	JUNCTION BOXES, J-7, >10'	EA	3	$ -	$0.00
0425 3 63	JUNCTION BOXES, DRAINAGE, J-7, PARTIAL	EA	3	$ -	$0.00
0425 4	INLETS, ADJUST	EA	3	$ -	$0.00

0425 5	MANHOLE, ADJUST	EA	3	$ -	$0.00
0425 6	VALVE BOXES, ADJUST	EA	3	$ -	$0.00
0425 7	MANHOLE COVER- REPLACE	EA	3	$ -	$0.00
0425 8	DRAINAGE STRUCTURES, MISCELLANEOUS, ADJUST	EA	3	$ -	$0.00
0425 11	MODIFY EXISTING DRAINAGE STRUCTURE	EA	3	$ -	$0.00
0425 14 1	GRATE FOR EXISTING DRAINAGE STRUCTURE, FURNISH AND INSTALL	SF	3	$ -	$0.00
0425 15 41	INLET TOP, REPAIR, CURB INLET	EA	3	$ -	$0.00
0425 15 42	INLET TOP, REPAIR, DITCH BOTTOM INLET	EA	3	$ -	$0.00
0425 15 51	INLET TOP, REPLACE, CURB INLET	EA	3	$ -	$0.00
0425 15 52	INLET TOP, REPLACE, DITCH BOTTOM INLET	EA	3	$ -	$0.00
0425 16 11	DRAINAGE MANHOLE- REPLACE TOP AND RIM	EA	3	$ -	$0.00
0425 82	REPLACE GRATE	EA	3	$ -	$0.00
0430 94 1	DESILTING PIPE, 0 - 24"	LF	50	$ -	$0.00
0430 94 2	DESILTING PIPE, 25 - 36"	LF	50	$ -	$0.00
430173112	PIPE CULVERT OPTIONAL MATERIAL, ROUND, 12", GUTTER DRAIN	LF	50	$ -	$0.00
430173115	PIPE CULVERT OPTIONAL MATERIAL, ROUND, 15", GUTTER DRAIN	LF	50	$ -	$0.00
430173118	PIPE CULVERT OPTIONAL MATERIAL, ROUND, 18", GUTTER DRAIN	LF	50	$ -	$0.00
430173124	PIPE CULVERT OPTIONAL MATERIAL, ROUND, 24", GUTTER DRAIN	LF	50	$ -	$0.00
430173130	PIPE CULVERT OPTIONAL MATERIAL, ROUND, 30", GUTTER DRAIN	LF	50	$ -	$0.00
430173136	PIPE CULVERT OPTIONAL MATERIAL, ROUND, 36", GUTTER DRAIN	LF	50	$ -	$0.00
430173142	PIPE CULVERT, OPTIONAL MATERIAL, ROUND, 42", GUTTER DRAIN	LF	50	$ -	$0.00
430173148	PIPE CULVERT, OPTIONAL MATERIAL, ROUND, 48" GUTTER DRAIN	LF	50	$ -	$0.00
430173218	PIPE CULVERT OPTIONAL MATERIAL, OTHER/ELLIPTICAL, 18", GUTTER DRAIN	LF	50	$ -	$0.00
430174112	PIPE CULVERT, OPTIONAL MATERIAL, ROUND, 12"SD	LF	50	$ -	$0.00
430174115	PIPE CULVERT, OPTIONAL MATERIAL, ROUND, 15"SD	LF	50	$ -	$0.00
430174118	PIPE CULVERT, OPTIONAL MATERIAL, ROUND, 18"SD	LF	50	$ -	$0.00
430174124	PIPE CULVERT, OPTIONAL MATERIAL, ROUND, 24"SD	LF	50	$ -	$0.00
430174130	PIPE CULVERT, OPTIONAL MATERIAL, ROUND, 30"SD	LF	50	$ -	$0.00

430174142	PIPE CULVERT, OPTIONAL MATERIAL, ROUND, 42"SD	LF	50	$ -	$0.00
430174148	PIPE CULVERT, OPTIONAL MATERIAL, ROUND, 48"SD	LF	50	$ -	$0.00
430174154	PIPE CULVERT, OPTIONAL MATERIAL, ROUND, 54"SD	LF	50	$ -	$0.00
430174160	PIPE CULVERT, OPTIONAL MATERIAL, ROUND, 60"SD	LF	50	$ -	$0.00
430174172	PIPE CULVERT, OPTIONAL MATERIAL, ROUND, 72"SD	LF	50	$ -	$0.00
430174215	PIPE CULVERT, OPTIONAL MATERIAL, OTHER SHAPE - ELLIP/ARCH, 15"SD	LF	50	$ -	$0.00
430174218	PIPE CULVERT, OPTIONAL MATERIAL, OTHER SHAPE - ELLIP/ARCH, 18"SD	LF	50	$ -	$0.00
430174224	PIPE CULVERT, OPTIONAL MATERIAL, OTHER SHAPE - ELLIP/ARCH, 24"SD	LF	50	$ -	$0.00
430174230	PIPE CULVERT, OPTIONAL MATERIAL, OTHER SHAPE - ELLIP/ARCH, 30"SD	LF	50	$ -	$0.00
430174236	PIPE CULVERT, OPTIONAL MATERIAL, OTHER SHAPE - ELLIP/ARCH, 36"SD	LF	50	$ -	$0.00
430174242	PIPE CULVERT, OPTIONAL MATERIAL, ELLIP/OTHER, 42"SD	LF	50	$ -	$0.00
430174248	PIPE CULVERT,OPTIONAL MATERIAL,OTHER-ELIP/ARCH, 48"SD	LF	50	$ -	$0.00
430175112	PIPE CULVERT,OPTIONAL MATERIAL,ROUND, 12"S/CD	LF	50	$ -	$0.00
430175115	PIPE CULVERT,OPTIONAL MATERIAL,ROUND, 15"S/CD	LF	50	$ -	$0.00
430175118	PIPE CULVERT, OPTIONAL MATERIAL, ROUND, 18"S/CD	LF	250	$ -	$0.00
430175124	PIPE CULVERT, OPTIONAL MATERIAL, ROUND, 24"S/CD	LF	50	$ -	$0.00
430175130	PIPE CULVERT, OPT MATERIAL, ROUND, 30"S/CD	LF	50	$ -	$0.00
430175136	PIPE CULVERT, OPT MATERIAL, ROUND, 36"S/CD	LF	50	$ -	$0.00
430175140	PIPE CULVERT, OPT MATERIAL, ROUND, 40"S/CD	LF	50	$ -	$0.00
430175142	PIPE CULVERT, OPT MATERIAL, ROUND, 42"S/CD	LF	50	$ -	$0.00
430175148	PIPE CULVERT, OPT MATERIAL, ROUND, 48"S/CD	LF	50	$ -	$0.00
430175154	PIPE CULVERT, OPT MATERIAL, ROUND, 54"S/CD	LF	50	$ -	$0.00
430175160	PIPE CULVERT, OPT MATERIAL, ROUND, 60"S/CD	LF	50	$ -	$0.00
430175166	PIPE CULVERT, OPT MATERIAL, ROUND, 66"S/CD	LF	50	$ -	$0.00
430175172	PIPE CULVERT, OPT MATERIAL, ROUND, 72"S/CD	LF	50	$ -	$0.00
430175178	PIPE CULVERT, OPT MATERIAL, ROUND, 78" STORM/CROSS DRAIN	LF	50	$ -	$0.00
430175184	PIPE CULVERT, OPT MATERIAL, ROUND, 84"S/CD	LF	50	$ -	$0.00
430175196	PIPE CULVERT, OPT MATERIAL, ROUND, 96"S/CD	LF	50	$ -	$0.00

430175215	PIPE CULVERT,OPTIONAL MATERIAL,OTHER-ELIP/ARCH, 15"S/CD	LF	50	$ -	$0.00
430175218	PIPE CULVERT,OPTIONAL MATERIAL,OTHER-ELIP/ARCH, 18"S/CD	LF	50	$ -	$0.00
430175224	PIPE CULVERT,OPTIONAL MATERIAL,OTHER SHAPE-ELIP/ARCH, 24"S/CD	LF	50	$ -	$0.00
430175230	PIPE CULVERT, OPT MATERIAL, OTHER SHAPE - ELIP/ARCH, 30"S/CD	LF	50	$ -	$0.00
430175236	PIPE CULVERT, OPT MATERIAL, OTHER SHAPE - ELIP/ARCH, 36"S/CD	LF	50	$ -	$0.00
430175242	PIPE CULVERT, OPT MATERIAL, OTHER SHAPE - ELIP/ARCH, 42"S/CD	LF	50	$ -	$0.00
430175248	PIPE CULVERT, OPT MATERIAL, OTHER SHAPE - ELIP/ARCH, 48"S/CD	LF	50	$ -	$0.00
430175254	PIPE CULVERT, OPT MATERIAL, OTHER SHAPE - ELIP/ARCH, 54"S/CD	LF	50	$ -	$0.00
430175260	PIPE CULVERT, OPT MATERIAL, OTHER SHAPE - ELIP/ARCH, 60"S/CD	LF	50	$ -	$0.00
430175266	PIPE CULVERT, OPT MATERIAL, OTHER SHAPE - ELIP/ARCH, 66"S/CD	LF	50	$ -	$0.00
430175272	PIPE CULVERT, OPT MATERIAL, OTHER SHAPE - ELIP/ARCH, 72"S/CD	LF	50	$ -	$0.00
430175299	PIPE CULVERT,OPTIONAL MATERIAL,OTHER SHAPE-ELIP/ARCH, 99" OR >, S/CD	LF	50	$ -	$0.00
430185118	PIPE CULVERT,OPTIONAL MATERIAL,ROUND, JACK & BORE, 18" , STORM AND CROSS DRAIN	LF	50	$ -	$0.00
430185124	PIPE CULVERT,OPTIONAL MATERIAL,ROUND, JACK & BORE, 24", STORM AND CROSS DRAIN	LF	50	$ -	$0.00
430185130	PIPE CULVERT,OPTIONAL MATERIAL,ROUND, JACK & BORE, 30", STORM AND CROSS DRAIN	LF	50	$ -	$0.00
430185136	PIPE CULVERT,OPTIONAL MATERIAL,ROUND, JACK & BORE, 36", STORM AND CROSS DRAIN	LF	50	$ -	$0.00
430185142	PIPE CULVERT,OPTIONAL MATERIAL,ROUND, JACK & BORE, 42", STORM AND CROSS DRAIN	LF	50	$ -	$0.00
430185148	PIPE CULVERT,OPTIONAL MATERIAL,ROUND, JACK & BORE, 48", STORM AND CROSS DRAIN	LF	50	$ -	$0.00
430185154	PIPE CULVERT,OPTIONAL MATERIAL,ROUND, JACK & BORE, 54", STORM AND CROSS DRAIN	LF	50	$ -	$0.00
430185160	PIPE CULVERT,OPTIONAL MATERIAL,ROUND, JACK & BORE, 60" , STORM AND CROSS DRAIN	LF	50	$ -	$0.00
430185166	PIPE CULVERT,OPTIONAL MATERIAL,ROUND, JACK & BORE, 66" , STORM AND CROSS DRAIN	LF	50	$ -	$0.00
430185178	PIPE CULVERT,OPTIONAL MATERIAL,ROUND, JACK & BORE, 78" , STORM AND CROSS DRAIN	LF	50	$ -	$0.00
0430200 21	FLARED END SECTION, CONCRETE, 12"	EA	3	$ -	$0.00
0430200 23	FLARED END SECTION, CONCRETE, 15"	EA	3	$ -	$0.00
0430200 25	FLARED END SECTION, CONCRETE, 18"	EA	3	$ -	$0.00
0430200 29	FLARED END SECTION, CONCRETE, 24"	EA	3	$ -	$0.00
0430200 33	FLARED END SECTION, CONCRETE, 30"	EA	3	$ -	$0.00
0430200 38	FLARED END SECTION, CONCRETE, 36"	EA	3	$ -	$0.00

0430200 40	FLARED END SECTION, CONCRETE, 42"	EA	3	$ -	$0.00
0430200 41	FLARED END SECTION, CONCRETE, 48"	EA	3	$ -	$0.00
0430200 42	FLARED END SECTION, CONCRETE, 54"	EA	3	$ -	$0.00
0430200 43	FLARED END SECTION, CONCRETE, 60"	EA	3	$ -	$0.00
0430200 44	FLARED END SECTION, CONCRETE, 66"	EA	3	$ -	$0.00
0430200 45	FLARED END SECTION, CONCRETE, 72"	EA	3	$ -	$0.00
430600025	U-ENDWALL, STD 260, 1:6 SLOPE, 18"PIPE	EA	3	$ -	$0.00
430600125	U-ENDWALL, STD 260, 1:4 SLOPE, 18"PIPE	EA	3	$ -	$0.00
430602123	U-ENDWALL, WITH GRATE,STD INDEX 260, 1:4 SLOPE, 15"	EA	3	$ -	$0.00
430602125	U-ENDWALL, WITH GRATE,STD 260, 1:4 SLOPE, 18"	EA	3	$ -	$0.00
430602129	U-ENDWALL, WITH GRATE,STD 260, 1:4 SLOPE, 24"	EA	3	$ -	$0.00
430602133	U-ENDWALL, WITH GRATE,STD INDEX 260, 1:4 SLOPE, 30"	EA	3	$ -	$0.00
430610025	U-ENDWALL, STD 261, 1:6 SLOPE, 18"PIPE	EA	3	$ -	$0.00
430610029	U-ENDWALL, STD 261, 1:6 SLOPE, 24"PIPE	EA	3	$ -	$0.00
430610033	U-ENDWALL, STD 261, 1:6 SLOPE, 30"PIPE	EA	3	$ -	$0.00
430610123	U-ENDWALL, STD 261, 1:4 SLOPE, 15"PIPE	EA	3	$ -	$0.00
430610125	U-ENDWALL, STD 261, 1:4 SLOPE, 18"PIPE	EA	3	$ -	$0.00
430610129	U-ENDWALL, STD 261, 1:4 SLOPE, 24"PIPE	EA	3	$ -	$0.00
430610133	U-ENDWALL, STD 261, 1:4 SLOPE, 30"PIPE	EA	3	$ -	$0.00
430610223	U-ENDWALL, STD 261, 1:3 SLOPE, 15"PIPE	EA	3	$ -	$0.00
430610225	U-ENDWALL, STD 261, 1:3 SLOPE, 18"PIPE	EA	3	$ -	$0.00
430610229	U-ENDWALL, STD 261, 1:3 SLOPE, 24"PIPE	EA	3	$ -	$0.00
430610233	U-ENDWALL, STD 261, 1:3 SLOPE, 30"PIPE	EA	3	$ -	$0.00
430610323	U-ENDWALL, STD 261, 1:2 SLOPE, 15"PIPE	EA	3	$ -	$0.00
430610325	U-ENDWALL, STD 261, 1:2 SLOPE, 18"PIPE	EA	3	$ -	$0.00
430610329	U-ENDWALL, STD 261,1:2 SLOPE, 24"PIPE	EA	3	$ -	$0.00
430611023	U-ENDWALL, STD 261, BAFFLES, 1:6 SLOPE, 15"PIPE	EA	3	$ -	$0.00
430611025	U-ENDWALL, STD 261, BAFFLES, 1:6 SLOPE, 18"PIPE	EA	3	$ -	$0.00

430611029	U-ENDWALL, STD 261, BAFFLES, 1:6 SLOPE, 24"PIPE	EA	3	$ -	$0.00
430611033	U-ENDWALL, STD 261, BAFFLES, 1:6 SLOPE, 30"PIPE	EA	3	$ -	$0.00
430611123	U-ENDWALL WITH BAFFLES, STD 261, 1:4 SLOPE, 15"PIPE	EA	3	$ -	$0.00
430611125	U-ENDWALL WITH BAFFLES, STD 261, 1:4 SLOPE, 18"PIPE	EA	3	$ -	$0.00
430611129	U-ENDWALL WITH BAFFLES, STD 261, 1:4 SLOPE, 24"PIPE	EA	3	$ -	$0.00
430611133	U-ENDWALL WITH BAFFLES,STD 261,1:4 SLOPE,30"PIPE	EA	3	$ -	$0.00
430611223	U-ENDWALL WITH BAFFLES, STD 261, 1:3 SLOPE, 15"PIPE	EA	3	$ -	$0.00
430611225	U-ENDWALL WITH BAFFLES, STD 261, 1:3 SLOPE, 18"PIPE	EA	3	$ -	$0.00
430611229	U-ENDWALL WITH BAFFLES, STD 261, 1:3 SLOPE, 24"PIPE	EA	3	$ -	$0.00
430611233	U-ENDWALL, STD 261, BAFFLES, 1:3 SLOPE, 30"PIPE	EA	3	$ -	$0.00
430611323	U-ENDWALL WITH BAFFLES, STD 261, 1:2 SLOPE, 15"PIPE	EA	3	$ -	$0.00
430611325	U-ENDWALL WITH BAFFLES, STD 261, 1:2 SLOPE, 18"PIPE	EA	3	$ -	$0.00
430611329	U-ENDWALL WITH BAFFLES, STD 261, 1:2 SLOPE, 24"PIPE	EA	3	$ -	$0.00
430611333	U-ENDWALL, BAFFLES, STD 261, 1:2 SLOPE, 30"PIPE	EA	3	$ -	$0.00
430612023	U-ENDWALL WITH GRATE, STD 261, 1:6 SLOPE, 15"	EA	3	$ -	$0.00
430612025	U-ENDWALL WITH GRATE, STD 261, 1:6 SLOPE, 18"PIPE	EA	3	$ -	$0.00
430612029	U-ENDWALL WITH GRATE, STD 261, 1:6 SLOPE, 24"PIPE	EA	3	$ -	$0.00
430612033	U-ENDWALL WITH GRATE, STD 261, 1:6 SLOPE, 30"	EA	3	$ -	$0.00
430612125	U-ENDWALL WITH GRATE, STD 261, 1:4 SLOPE, 18"PIPE	EA	3	$ -	$0.00
430612129	U-ENDWALL WITH GRATE, STD 261, 1:4 SLOPE, 24"PIPE	EA	3	$ -	$0.00
430612133	U-ENDWALL, GRATE, STD 261, 1:4 SLOPE, 30" PIPE	EA	3	$ -	$0.00
430612329	U-ENDWALL WITH GRATE, STD 261, 1:2 SLOPE, 24"PIPE	EA	3	$ -	$0.00
430612333	U-ENDWALL, GRATE, STD 261, 1:2 SLOPE, 30" PIPE	EA	3	$ -	$0.00
430613025	U-ENDWALL, WITH BAFFLES & GRATE, STD 261,1:6 SLOPE, 18"	EA	3	$ -	$0.00
430613029	U-ENDWALL, WITH BAFFLES & GRATE, STD 261,1:6 SLOPE, 24"PIPE	EA	3	$ -	$0.00
430613033	U-ENDWALL, WITH BAFFLES & GRATE, STD 261,1:6 SLOPE, 30"	EA	3	$ -	$0.00
430613123	U-ENDWALL, WITH BAFFLES & GRATE, STD 261,1:4 SLOPE,15"PIPE	EA	3	$ -	$0.00
430613125	U-ENDWALL, WITH BAFFLES & GRATE, STD 261,1:4 SLOPE,18"PIPE	EA	3	$ -	$0.00

430613129	U-ENDWALL, WITH BAFFLES & GRATE, STD 261,1:4 SLOPE, 24"PIPE	EA	3	$ -	$0.00
430613133	U-ENDWALL, WITH BAFFLES & GRATE, STD 261,1:4 SLOPE,30"PIPE	EA	3	$ -	$0.00
430613225	U-ENDWALL, WITH BAFFLES & GRATE, STD 261,1:3 SLOPE,18"PIPE	EA	3	$ -	$0.00
430613229	U-ENDWALL, WITH BAFFLES & GRATE, STD 261,1:3 SLOPE, 24 "PIPE	EA	3	$ -	$0.00
430613233	U-ENDWALL, WITH BAFFLES & GRATE, STD 261,1:3 SLOPE,30"PIPE	EA	3	$ -	$0.00
430613325	U-ENDWALL, WITH BAFFLES & GRATE, STD 261,1:2 SLOPE,18"PIPE	EA	3	$ -	$0.00
430613333	U-ENDWALL, WITH BAFFLES & GRATE, STD 261,1:2 SLOPE,30"PIPE	EA	3	$ -	$0.00
430830	PIPE FILLING AND PLUGGING- PLACE OUT OF SERVICE	CY	20	$ -	$0.00
430950	DESILTING CONCRETE BOX CULVERT	CY	20	$ -	$0.00
0430963 1	PVC PIPE FOR BACK OF SIDEWALK, 4"	LF	50	$ -	$0.00
430982120	MITERED END SECTION, OPTIONAL ROUND, 8" CD	EA	3	$ -	$0.00
430982121	MITERED END SECTION, OPTIONAL ROUND, 12" CD	EA	3	$ -	$0.00
430982123	MITERED END SECTION, OPTIONAL ROUND, 15" CD	EA	3	$ -	$0.00
430982125	MITERED END SECTION, OPTIONAL ROUND, 18" CD	EA	3	$ -	$0.00
430982129	MITERED END SECTION, OPTIONAL ROUND, 24" CD	EA	3	$ -	$0.00
430982133	MITERED END SECTION, OPTIONAL ROUND, 30" CD	EA	3	$ -	$0.00
430982138	MITERED END SECTION, OPTIONAL ROUND, 36" CD	EA	3	$ -	$0.00
430982140	MITERED END SECTION, OPTIONAL ROUND, 42" CD	EA	3	$ -	$0.00
430982141	MITERED END SECTION, OPTIONAL ROUND, 48" CD	EA	3	$ -	$0.00
430982142	MITERED END SECTION, OPTIONAL ROUND, 54" CD	EA	3	$ -	$0.00
430982143	MITERED END SECTION, OPTIONAL ROUND, 60" CD	EA	3	$ -	$0.00
430982144	MITERED END SECTION, OPTIONAL ROUND, 66" CD	EA	3	$ -	$0.00
430982145	MITERED END SECTION, OPTIONAL ROUND, 72" CD	EA	3	$ -	$0.00
430982147	MITERED END SECTION, OPTIONAL ROUND, 84" CD	EA	3	$ -	$0.00
430982623	MITERED END SECTION, OPTIONAL - ELLIPTICAL / ARCH, 15" CD	EA	3	$ -	$0.00
430982625	MITERED END SECTION, OPTIONAL - ELLIPTICAL / ARCH, 18" CD	EA	3	$ -	$0.00
430982629	MITERED END SECTION, OPTIONAL - ELLIPTICAL / ARCH, 24" CD	EA	3	$ -	$0.00
430982633	MITERED END SECTION, OPTIONAL - ELLIPTICAL / ARCH, 30" CD	EA	3	$ -	$0.00

430982638	MITERED END SECTION, OPTIONAL - ELLIPTICAL / ARCH, 36" CD	EA	3	$ -	$0.00
430982640	MITERED END SECTION, OPTIONAL - ELLIPTICAL / ARCH, 42" CD	EA	3	$ -	$0.00
430982641	MITERED END SECTION, OPTIONAL - ELLIPTICAL / ARCH, 48" CD	EA	3	$ -	$0.00
430982642	MITERED END SECTION, OPTIONAL - ELLIPTICAL / ARCH, 54" CD	EA	3	$ -	$0.00
430982643	MITERED END SECTION, OPTIONAL - ELLIPTICAL / ARCH, 60" CD	EA	3	$ -	$0.00
430982645	MITERED END SECTION, OPTIONAL - ELLIPTICAL / ARCH, 72" CD	EA	3	$ -	$0.00
430984120	MITERED END SECTION, OPTIONAL ROUND, 8" SD	EA	3	$ -	$0.00
430984121	MITERED END SECTION, OPTIONAL ROUND, 12" SD	EA	3	$ -	$0.00
430984123	MITERED END SECTION, OPTIONAL ROUND, 15" SD	EA	3	$ -	$0.00
430984125	MITERED END SECTION, OPTIONAL ROUND, 18" SD	EA	3	$ -	$0.00
430984129	MITERED END SECTION, OPTIONAL ROUND, 24" SD	EA	3	$ -	$0.00
430984133	MITERED END SECTION , OPTIONAL ROUND, 30" SD	EA	3	$ -	$0.00
430984138	MITERED END SECTION , OPTIONAL ROUND, 36" SIDE DRAIN	EA	3	$ -	$0.00
430984140	MITERED END SECTION , OPTIONAL ROUND, 42" SD	EA	3	$ -	$0.00
430984141	MITERED END SECTION , OPTIONAL ROUND, 48" SD	EA	3	$ -	$0.00
430984142	MITERED END SECTION , OPTIONAL ROUND, 54" SD	EA	3	$ -	$0.00
430984143	MITERED END SECTION , OPTIONAL ROUND, 60" SD	EA	3	$ -	$0.00
430984144	MITERED END SECTION, OPTIONAL ROUND, 66" SIDE DRAIN	EA	3	$ -	$0.00
430984145	MITERED END SECTION, OPTIONAL ROUND, 72" SIDE DRAIN	EA	3	$ -	$0.00
430984147	MITERED END SECTION, OPTIONAL ROUND, 84" SD	EA	3	$ -	$0.00
430984623	MITERED END SECTION, OPTIONAL OTHER - ELLIP/ARCH, 15" SD	EA	3	$ -	$0.00
430984625	MITERED END SECT, OPTIONAL - ELLIPTICAL / ARCH, 18" SD	EA	3	$ -	$0.00
430984629	MITERED END SECT, OPTIONAL - ELLIPTICAL / ARCH, 24" SD	EA	3	$ -	$0.00
430984633	MITERED END SECT, OPTIONAL /ELLIP/ARCH, 30" SD	EA	3	$ -	$0.00
430984638	MITERED END SECT, OPTIONAL /ELLIP/ARCH, 36" SD	EA	3	$ -	$0.00
430984640	MITERED END SECT, OPTIONAL /ELLIP/ARCH, 42" SD	EA	3	$ -	$0.00
430984641	MITERED END SECT, OPTIONAL /ELLIP/ARCH, 48" SD	EA	3	$ -	$0.00
430984642	MITERED END SECT, OPTIONAL /ELLIP/ARCH, 54" SD	EA	3	$ -	$0.00

430984643	MITERED END SECTION, OPTIONAL SHAPE /ELLIP/ARCH, 60" SIDE DRAIN	EA	3	$ -	$0.00
430984644	MITERED END SECT, OPTIONAL /ELLIP/ARCH, 66" SD	EA	3	$ -	$0.00
430984645	MITERED END SECT, OPTIONAL /ELLIP/ARCH, 72" SD	EA	3	$ -	$0.00
430990	MITERED END SECT, REPLACE GRATE	EA	3	$ -	$0.00
0431 1 1	PIPE LINER, OPTIONAL MATERIAL, 0-24"	LF	50	$ -	$0.00
0431 1 2	PIPE LINER, OPTIONAL MATERIAL, 25-36"	LF	50	$ -	$0.00
0431 1 3	PIPE LINER, OPTIONAL MATERIAL, 37-48"	LF	50	$ -	$0.00
0431 1 4	PIPE LINER, OPTIONAL MATERIAL, 49 - 60"	LF	50	$ -	$0.00
0431 1 5	PIPE LINER, OPTIONAL MATERIAL, 61" AND GREATER	LF	50	$ -	$0.00
0436 1 1	TRENCH DRAIN, STANDARD	LF	50	$ -	$0.00
0440 1 10	UNDERDRAIN, TYPE I	LF	50	$ -	$0.00
0440 1 20	UNDERDRAIN, TYPE II	LF	50	$ -	$0.00
0440 1 30	UNDERDRAIN, TYPE III	LF	50	$ -	$0.00
0440 1 50	UNDERDRAIN, TYPE V	LF	50	$ -	$0.00
0440 70	UNDERDRAIN INSPECTION BOX	EA	5	$ -	$0.00
0440 73 1	UNDERDRAIN OUTLET PIPE, 4"	LF	50	$ -	$0.00
0440 73 2	UNDERDRAIN OUTLET PIPE, 6"	LF	50	$ -	$0.00
0440 73 3	UNDERDRAIN OUTLET PIPE, 8"	LF	50	$ -	$0.00
0440 73 4	UNDERDRAIN OUTLET PIPE, 10"	LF	50	$ -	$0.00
0440 73 5	UNDERDRAIN OUTLET PIPE, 12"	LF	50	$ -	$0.00
0443 70 3	FRENCH DRAIN, 18"	LF	50	$ -	$0.00
0443 70 4	FRENCH DRAIN, 24"	LF	50	$ -	$0.00
0443 70 5	FRENCH DRAIN, 30"	LF	50	$ -	$0.00
0443 70 6	FRENCH DRAIN, 36"	LF	50	$ -	$0.00
0443 70 7	FRENCH DRAIN, 42"	LF	50	$ -	$0.00
0443 70 8	FRENCH DRAIN, 48"	LF	50	$ -	$0.00
0443 70 9	FRENCH DRAIN, 54"	LF	50	$ -	$0.00
0443 70 10	FRENCH DRAIN, 60"	LF	50	$ -	$0.00

0443 72 10	FRENCH DRAIN- AGGREGATE WITHOUT PIPE, 0-0.9' DEPTH	SY	10	$ -	$0.00
0443 72 11	FRENCH DRAIN- AGGREGATE WITHOUT PIPE, 1-1.9' DEPTH	SY	10	$ -	$0.00
0443 72 12	FRENCH DRAIN- AGGREGATE WITHOUT PIPE, 2-2.9' DEPTH	SY	10	$ -	$0.00
0443 72 13	FRENCH DRAIN- AGGREGATE WITHOUT PIPE, 3-3.9' DEPTH	SY	10	$ -	$0.00
0443 72 14	FRENCH DRAIN- AGGREGATE WITHOUT PIPE, 4-4.9' DEPTH	SY	10	$ -	$0.00
0446 1 1	EDGEDRAIN DRAINCRETE, STANDARD	LF	50	$ -	$0.00
0446 71 1	EDGEDRAIN OUTLET PIPE, 4"	LF	50	$ -	$0.00
0515 1 1	PIPE HANDRAIL - GUIDERAIL, STEEL	LF	50	$ -	$0.00
0515 1 2	PIPE HANDRAIL - GUIDERAIL, ALUMINUM	LF	50	$ -	$0.00
0515 1 41	PIPE HANDRAIL - GUIDERAIL, RELOCATE, STEEL	LF	50	$ -	$0.00
0515 1 42	PIPE HANDRAIL - GUIDERAIL, RELOCATE, ALUMINUM	LF	50	$ -	$0.00
0515 2111	PEDESTRIAN / BICYCLE RAILING, NS, 42" TYPE 1	LF	50	$ -	$0.00
0515 2211	PEDESTRIAN / BICYCLE RAILING, STEEL, 42" TYPE 1	LF	50	$ -	$0.00
0515 2212	PEDESTRIAN / BICYCLE RAILING, STEEL, 42" TYPE 2	LF	50	$ -	$0.00
0515 2213	PEDESTRIAN / BICYCLE RAILING, STEEL, 42" TYPE 3	LF	50	$ -	$0.00
0515 2221	PEDESTRIAN/ BICYCLE RAILING, STEEL ONLY,54" TYPE 1	LF	50	$ -	$0.00
0515 2231	PEDESTRIAN/ BICYCLE RAILING, STEEL ONLY,48" TYPE 1	LF	50	$ -	$0.00
0515 2311	PEDESTRIAN/ BICYCLE RAILING, ALUMINUM ONLY,42" TYPE 1	LF	50	$ -	$0.00
0515 2312	PEDESTRIAN / BICYCLE RAILING, ALUMINUM, 42" TYPE 2	LF	50	$ -	$0.00
0515 2313	PEDESTRIAN / BICYCLE RAILING, ALUMINUM, 42" TYPE 3	LF	50	$ -	$0.00
0515 2321	PEDESTRIAN/ BICYCLE RAILING, ALUMINUM ONLY,54" TYPE 1	LF	50	$ -	$0.00
0515 2411	PEDESTRIAN / BICYCLE RAILING, SPECIAL MATERIALS- WEATHERING STEEL, 42" TYPE 1	LF	50	$ -	$0.00
0515 2500	PEDESTRIAN / BICYCLE RAILING, RELOCATE	LF	50	$ -	$0.00
0519 78	BOLLARDS	EA	10	$ -	$0.00
0520 1 7	CONCRETE CURB & GUTTER, TYPE E	LF	1000	$ 90.00	$90000.00
0520 1 10	CONCRETE CURB & GUTTER, TYPE F	LF	5000	$ 90.00	$450000.00
0520 1 11	CONCRETE CURB & GUTTER, VARIABLE HEIGHT TYPE F	LF	100	$ 110.00	$11000.00
0520 1 12	CONCRETE CURB & GUTTER, TYPE F WITH SPECIAL GUTTER PROFILE	LF	100	$ 110.00	$11000.00

0520 2 1	CONCRETE CURB, TYPE A	LF	100	$ 90.00	$9000.00
0520 2 2	CONCRETE CURB, TYPE B	LF	1000	$ 90.00	$90000.00
0520 2 4	CONCRETE CURB, TYPE D	LF	1000	$ 90.00	$90000.00
0520 3	VALLEY GUTTER- CONCRETE	LF	100	$ 200.00	$20000.00
0520 5 11	TRAFFIC SEPARATOR CONCRETE - TYPE I, 4' WIDE	LF	50	$ 200.00	$10000.00
0520 5 12	TRAFFIC SEPARATOR CONCRETE - TYPE I, 6' WIDE	LF	50	$ 220.00	$11000.00
520 5 16	TRAFFIC SEPARATOR CONCRETE- TYPE I, 8.5' WIDE	LF	50	$ 240.00	$12000.00
0520 5 21	TRAFFIC SEPARATOR - CONCRETE, TYPE II, 4' WIDE	LF	50	$ 225.00	$11250.00
0520 5 22	TRAFFIC SEPARATOR - CONCRETE, TYPE II, 6' WIDE	LF	50	$ 250.00	$12500.00
0520 5 26	TRAFFIC SEPARATOR CONCRETE- TYPE II, 8.5' WIDE	LF	50	$ 300.00	$15000.00
0520 5 41	TRAFFIC SEPARATOR CONCRETE, TYPE IV, 4' WIDE	LF	50	$ 240.00	$12000.00
0520 5 42	TRAFFIC SEPARATOR CONCRETE, TYPE IV, 6' WIDE	LF	50	$ 260.00	$13000.00
0520 5 46	TRAFFIC SEPARATOR CONCRETE, TYPE IV, 8.5' WIDE	LF	50	$ 310.00	$15500.00
0520 5 51	TRAF SEP CONC, TYPE V, 4' WIDE	LF	50	$ 200.00	$10000.00
0520 6	SHOULDER GUTTER- CONCRETE	LF	50	$ 200.00	$10000.00
0520 70	CONCRETE TRAFFIC SEPARATOR, SPECIAL - VARIABLE WIDTH	SY	50	$ 250.00	$12500.00
0521 72 2	SHOULDER CONCRETE BARRIER WALL, BOX CULVERT	LF	100	$ -	$0.00
0521 72 3	SHOULDER CONCRETE BARRIER WALL, RIGID-SHOULDER	LF	100	$ -	$0.00
0521 72 4	SHOULDER CONCRETE BARRIER WALL, RIGID RETAINING	LF	100	$ -	$0.00
0521 72 5	SHOULDER CONCRETE BARRIER WALL, RIGID-CURB & GUTTER	LF	100	$ -	$0.00
0521 72 10	SHOULDER CONCRETE BARRIER WALL, RIGID SHOULDER 42"	LF	100	$ -	$0.00
0521 72 11	SHOULDER CONCRETE BARRIER WALL, RIGID SHOULDER 54"	LF	100	$ -	$0.00
0521 73	CONCRETE BARRIER WALL, REMOVAL	LF	20	$ -	$0.00
0522 1	CONCRETE SIDEWALK AND DRIVEWAY, 4" THICK	SY	3000	$ 125.00	$375000.00
0522 2	CONCRETE SIDEWALK AND DRIVEWAY, 6" THICK	SY	500	$ 200.00	$100000.00
0522 3	BUS BOARDING PAD - CONCRETE	SY	50	$ 250.00	$12500.00
0522 4	BUS SHELTER PAD - CONCRETE	SY	50	$ 250.00	$12500.00
0524 1 1	CONCRETE DITCH PAVT, NON REINFORCED, 3"	SY	10	$ 160.00	$1600.00

0524 1 2	CONCRETE DITCH PAVEMENT, NON REINFORCED, 4"	SY	10	$ 175.00	$1750.00
0524 1 3	CONCRETE DITCH PAVEMENT, NON REINFORCED, 5"	SY	10	$ 200.00	$2000.00
0524 1 4	CONCRETE DITCH PAVEMENT, NON REINFORCED, 6"	SY	10	$ 225.00	$2250.00
0524 1 19	CONCRETE DITCH PAVT, 3", REINFORCED	SY	10	$ 175.00	$1750.00
0524 1 29	CONCRETE DITCH PAVEMENT, 4", REINFORCED	SY	10	$ 200.00	$2000.00
0524 1 49	CONCRETE DITCH PAVEMENT, 6", REINFORCED	SY	10	$ 250.00	$2500.00
0524 2 1	CONCRETE SLOPE PAVEMENT,NON REINFORCED, 3"	SY	10	$ -	$0.00
0524 2 2	CONCRETE SLOPE PAVEMENT,NON REINFORCED, 4"	SY	10	$ -	$0.00
0524 2 4	CONCRETE SLOPE PAVEMENT,NON REINFORCED, 6"	SY	10	$ -	$0.00
0524 2 29	CONCRETE SLOPE PAVEMENT, 4", REINFORCED	SY	10	$ -	$0.00
0524 2 49	CONCRETE SLOPE PAVEMENT, 6", REINFORCED	SY	10	$ -	$0.00
0524 3	CONC CORE DITCH BLOCKS	CY	10	$ -	$0.00
0526 1 1	PAVERS, ARCHITECTURAL, ROADWAY	SY	50	$ 350.00	$17500.00
0526 1 2	PAVERS, ARCHITECTURAL, SIDEWALK	SY	50	$ 300.00	$15000.00
0527 2	DETECTABLE WARNINGS	SF	1000	$ 40.00	$40000.00
0530 1	RIPRAP, SAND-CEMENT	CY	50	$ -	$0.00
0530 3 3	RIPRAP- RUBBLE, BANK AND SHORE	TN	10	$ -	$0.00
0530 3 4	RIPRAP, RUBBLE, F&I, DITCH LINING	TN	10	$ -	$0.00
0530 3 5	RIPRAP- RUBBLE, COASTAL SHORE- LARGE BOULDERS	TN	10	$ -	$0.00
0530 74	BEDDING STONE	TN	10	$ -	$0.00
0536 1 0	GUARDRAIL -ROADWAY, GENERAL TL-2	LF	250	$ -	$0.00
0536 1 1	GUARDRAIL -ROADWAY, GENERAL TL-3	LF	250	$ -	$0.00
0536 1 3	GUARDRAIL ROADWAY, DOUBLE FACE	LF	250	$ -	$0.00
0536 1 11	GUARDRAIL, ROADWAY, MODIFIED THRIE BEAM	LF	250	$ -	$0.00
0536 1 12	GUARDRAIL ROADWAY, MODIFIED THRIE BEAM-DOUBLE FACE	LF	250	$ -	$0.00
0536 5 1	RUB RAIL FOR GUARDRAIL, SINGLE SIDED	LF	250	$ -	$0.00
0536 5 2	RUB RAIL FOR GUARDRAIL, DOUBLE SIDED	LF	250	$ -	$0.00
0536 7 1	SPECIAL GUARDRAIL POST- DEEP POST FOR SLOPE BREAK CONDITION-TIMBER OR STEEL	EA	5	$ -	$0.00

0536 7 2	SPECIAL GUARDRAIL POST- SPECIAL STEEL POST FOR CONCRETE STRUCTURE MOUNT	EA	5	$ -	$0.00
0536 7 3	SPECIAL GUARDRAIL POST- ENCASED POST FOR SHALLOW MOUNT	EA	5	$ -	$0.00
0536 7 4	SPECIAL GUARDRAIL POST- FRANGIBLE LEAVE-OUT FOR MOUNTING THROUGH CONCRETE SURFACE	EA	5	$ -	$0.00
0536 8 11	APPROACH TRANSITION TO RIGID BARRIER- BRIDGE ANCHORAGE ASSEMBLY CONNECTION, FURNISH & INSTALL	EA	5	$ -	$0.00
0536 8 12	APPROACH TRANSITION CONNECTION TO RIGID BARRIER, FURNISH AND INSTALL, TL-2	EA	5	$ -	$0.00
0536 8 13	APPROACH TRANSITION CONNECTION TO RIGID BARRIER, FURNISH AND INSTALL, TL-3	EA	5	$ -	$0.00
0536 8 40	APPROACH TRANSITION TO RIGID BARRIER- BRIDGE ANCHORAGE ASSEMBLY, RELOCATE	EA	5	$ -	$0.00
0536 8 60	APPROACH TRANSITION TO RIGID BARRIER- BRIDGE ANCHORAGE ASSEMBLY, REMOVE	EA	5	$ -	$0.00
0536 73	GUARDRAIL REMOVAL	LF	25	$ -	$0.00
0536 85 22	GUARDRAIL END ANCHORAGE ASSEMBLY/END TREATMENT- FLARED	EA	2	$ -	$0.00
0536 85 24	GUARDRAIL END ANCHORAGE ASSEMBLY/END TREATMENT- PARALLEL	EA	2	$ -	$0.00
0536 85 25	GUARDRAIL END ANCHORAGE ASSEMBLY/END TREATMENT- TYPE II	EA	2	$ -	$0.00
0536 85 26	GUARDRAIL END ANCHORAGE ASSEMBLY/END TREATMENT- TYPE CRT	EA	2	$ -	$0.00
0536 85 27	GUARDRAIL END ANCHORAGE ASSEMBLY/END TREATMENT- DOUBLE FACE TERMINAL	EA	2	$ -	$0.00
0538 1	GUARDRAIL- RESET	LF	25	$ -	$0.00
0539 80111	OPAQUE VISUAL BARRIER, F&I, CONCRETE, 2' 3"	LF	25	$ -	$0.00
0544 74 40	RELOCATE CRASH CUSHION - ALL OPTIONS	EA	2	$ -	$0.00
0544 75 1	CRASH CUSHION	EA	2	$ -	$0.00
0546 71	RUMBLE STRIPS	PS	10	$ -	$0.00
0546 72 52	RUMBLE STRIPS, GROUND-IN, 16" CENTERLINE USED WITH RUMBLE STRIPE	GM	1	$ -	$0.00
0546 72 53	RUMBLE STRIPS, GROUND-IN, 8" EDGELINE USED WITH RUMBLE STRIPE	GM	1	$ -	$0.00
0546 72 55	RUMBLE STRIPS, GROUND-IN, 16" SHOULDER	GM	1	$ -	$0.00
0550 10110	FENCING, TYPE A, 0.0-5.0', STANDARD	LF	25	$ -	$0.00
0550 10118	FENCING, TYPE A, 0.0-5.0', TYPE A STANDARD, RESET EXISTING	LF	25	$ -	$0.00
0550 10119	FENCING, TYPE A, 0.0-5.0', SPECIAL FEATURES	LF	25	$ -	$0.00
0550 10120	FENCING, TYPE A, 5.1-6.0, STANDARD	LF	25	$ -	$0.00
0550 10128	FENCING, TYPE A, 5.1-6.0', RESET EXISTING	LF	25	$ -	$0.00
0550 10130	FENCING, TYPE A, 6.1-7.0, STANDARD	LF	25	$ -	$0.00

0550 10140	FENCING, TYPE A, 7.1-8.0', STANDARD	LF	25	$ -	$0.00
0550 10148	FENCING, TYPE A, 7.1-8.0', RESET EXISTING	LF	25	$ -	$0.00
0550 10149	FENCING, TYPE A, 7.1-8.0', SPECIAL FEATURES	LF	25	$ -	$0.00
0550 10150	FENCING, TYPE A, 8.1-10.0', STANDARD	LF	25	$ -	$0.00
0550 10158	FENCING, TYPE A, 8.1-10.0', RESET EXISTING	LF	25	$ -	$0.00
0550 10159	FENCING, TYPE A, 8.1-10.0', SPECIAL FEATURES	LF	25	$ -	$0.00
0550 10169	FENCING, TYPE A, 10.1-12.0', SPECIAL FEATURES	LF	25	$ -	$0.00
0550 10210	FENCING, TYPE B, 0.0-5.0', STANDARD FEATURES	LF	25	$ -	$0.00
0550 10212	FENCING, TYPE B, 0.5-5.0', W/ VINYL COATING	LF	25	$ -	$0.00
0550 10218	FENCING, TYPE B, 0.0-5.0', RESET EXISTING	LF	25	$ -	$0.00
0550 10219	FENCING, TYPE B, 0.0-5.0', SPECIAL FEATURES	LF	25	$ -	$0.00
0550 10220	FENCING, TYPE B, 5.1-6.0', STANDARD	LF	25	$ -	$0.00
0550 10221	FENCING, TYPE B, 5.1-6.0', W/ BARB WIRE ATTMT	LF	25	$ -	$0.00
0550 10222	FENCING, TYPE B, 5.1-6.0, W/ VINYL COATING	LF	25	$ -	$0.00
0550 10228	FENCING, TYPE B, 5.1-6.0, RESET EXISTING	LF	25	$ -	$0.00
0550 10229	FENCING, TYPE B, 5.1-6.0, SPECIAL FEATURES	LF	25	$ -	$0.00
0550 10230	FENCING, TYPE B, 6.1-7.0', STANDARD	LF	25	$ -	$0.00
0550 10231	FENCING, TYPE B, 6.1-7.0, W/ BARB WIRE ATTMT	LF	25	$ -	$0.00
0550 10232	FENCING, TYPE B, 6.1-7.0, W/ VINYL COATING	LF	25	$ -	$0.00
0550 10238	FENCING, TYPE B, 6.1-7.0, RESET EXISTING	LF	25	$ -	$0.00
0550 10240	FENCING, TYPE B, 7.1-8.0', STANDARD	LF	25	$ -	$0.00
0550 10242	FENCING, TYPE B, 7.1-8.0', VINYL COATING	LF	25	$ -	$0.00
0550 10248	FENCING, TYPE B, 7.1-8.0, RESET EXISTING	LF	25	$ -	$0.00
0550 10250	FENCING, TYPE B, 8.1-10.0', STANDARD FEATURES	LF	25	$ -	$0.00
0550 10251	FENCING, TYPE B, 8.1-10.0', WITH BARBED WIRE ATTMT	LF	25	$ -	$0.00
0550 10252	FENCING, TYPE B, 8.1-10.0', VINYL COATING	LF	25	$ -	$0.00
0550 10256	FENCING, TYPE B, 8-10.0', WITH VINYL COATING AND BARBED WIRE ATTACHMENT	LF	25	$ -	$0.00
0550 10258	FENCING, TYPE B, 8.1-10.0', RESET EXISTING FENCE	LF	25	$ -	$0.00

0550 10259	FENCING, TYPE B, 8.1-10.0', SPECIAL	LF	25	$ -	$0.00
0550 10266	FENCING, TYPE B, 10.1-12.0', WITH VINYL COATING AND BARBED WIRE ATTACHMENT	LF	25	$ -	$0.00
0550 10315	FENCING, TYPE R, 0-5.0', VERTICAL	LF	25	$ -	$0.00
0550 10325	FENCING, TYPE R, 5.1-6.0', VERTICAL	LF	25	$ -	$0.00
0550 10335	FENCING, TYPE R, 6.1-7.0', VERTICAL	LF	25	$ -	$0.00
0550 10343	FENCING, TYPE R, 7.1-8.0, W/FULL ENCLOSURE	LF	25	$ -	$0.00
0550 10344	FENCING, TYPE R, 7.1-8.0, W / PARTIAL ENCLOSURE	LF	25	$ -	$0.00
0550 10353	FENCING, TYPE R, 8.1 - 10.0', WITH FULL ENCLOSURE	LF	25	$ -	$0.00
0550 10354	FENCING, TYPE R, 8.1-10.0', WITH PARTIAL ENCLOSURE, TYPE R ONLY	LF	25	$ -	$0.00
0550 10355	FENCING, TYPE R, 8.1-10.0', VERTICAL	LF	25	$ -	$0.00
0550 10363	FENCING, TYPE R, GREATER THAN 10.0', WITH FULL ENCLOSURE	LF	25	$ -	$0.00
0570 1 2	PERFORMANCE TURF, SOD	SY	1500	$ 20.00	$30000.00
0571 1 11	PLASTIC EROSION MAT, TURF REINFORCED MAT, TYPE 1	SY	100	$ 30.00	$3000.00
0571 1 12	PLASTIC EROSION MAT, TRM, TYPE 2	SY	100	$ 35.00	$3500.00
0571 1 13	PLASTIC EROSION MAT, TURF REINFORCED MAT, TYPE 3	SY	100	$ 40.00	$4000.00
0591 1 2	4" LANDSCAPE SLEEVE (UNDERGROUND)	LF	50	$ 150.00	$7500.00
0591 1 2A	4" LANDSCAPE SLEEVE (BORED)	LF	50	$ 250.00	$12500.00
0630 2 11	CONDUIT, FURNISH & INSTALL, OPEN TRENCH	LF	1000	$ 70.00	$70000.00
0630 2 12	CONDUIT, FURNISH & INSTALL, DIRECTIONAL BORE	LF	1000	$ 105.00	$105000.00
0630 2 14	CONDUIT, FURNISH & INSTALL, ABOVEGROUND	LF	1000	$ 91.00	$91000.00
0630 2 15	CONDUIT, FURNISH & INSTALL, BRIDGE MOUNT	LF	100	$ 91.00	$9100.00
0630 2 65	CONDUIT, REMOVE, BRIDGE MOUNT	LF	100	$ 21.00	$2100.00
0654 001	RECTANGULAR RAPID FLASHING BEACON ASSEMBLY	EA	2	$ 17,500.00	$35000.00
0660 2101	LOOP ASSEMBLY- F&I, TYPE A	AS	20	$ 3,780.00	$75600.00
0660 2102	LOOP ASSEMBLY, F&I, TYPE B	AS	20	$ 3,640.00	$72800.00
0660 2103	LOOP ASSEMBLY, F&I, TYPE C	AS	20	$ 3,780.00	$75600.00
0660 2104	LOOP ASSEMBLY, F&I, TYPE D	AS	20	$ 3,780.00	$75600.00
0660 2105	LOOP ASSEMBLY, F&I, TYPE E	AS	20	$ 3,780.00	$75600.00

0660 2106	LOOP ASSEMBLY, F&I, TYPE F	AS	20	$ 4,200.00	$84000.00
0660 2107	LOOP ASSEMBLY, F&I, TYPE G	AS	20	$ 4,200.00	$84000.00
0660 3 11	VEHICLE DETECTION SYSTEM- MICROWAVE, FURNISH & INSTALL CABINET EQUIPMENT	EA	5	$ 13,160.00	$65800.00
0660 3 12	VEHICLE DETECTION SYSTEM- MICROWAVE, FURNISH & INSTALL, ABOVE GROUND EQUIPMENT	EA	5	$ 21,700.00	$108500.00
0700 1 11	SINGLE POST SIGN, F&I GROUND MOUNT, UP TO 12 SF	AS	50	$ 770.00	$38500.00
0700 1 12	SINGLE POST SIGN, F&I GROUND MOUNT, 12-20 SF	AS	20	$ 3,080.00	$61600.00
0700 1 13	SINGLE POST SIGN, F&I GROUND MOUNT, 21-30 SF	AS	5	$ 3,640.00	$18200.00
0700 1 14	SINGLE POST SIGN, F&I GROUND MOUNT, 31+ SF	AS	5	$ 4,900.00	$24500.00
0700 1 18	SINGLE POST SIGN, F&I GROUND MOUNT, IN-STREET FLEXIBLE POST	AS	5	$ 840.00	$4200.00
0700 1 21	SINGLE POST SIGN, F&I BARRIER MOUNT INDEX 11871 UP TO 12 SF	AS	5	$ 4,200.00	$21000.00
0700 1 22	SINGLE POST SIGN, F&I BARRIER MOUNT INDEX 11871 12-20 SF	AS	5	$ 4,900.00	$24500.00
0700 1 23	SINGLE POST SIGN, F&I BARRIER MOUNT INDEX 11871, 21-30 SF SHEETING AREA- BACK TO BACK	AS	5	$ 5,600.00	$28000.00
0700 1 31	SINGLE POST SIGN, F&I BRIDGE MOUNT INDEX 11870, UP TO 12 SF	AS	5	$ 11,200.00	$56000.00
0700 1 32	SINGLE POST SIGN, F&I BRIDGE MOUNT INDEX 11870, 12-20 SF	AS	5	$ 12,600.00	$63000.00
0700 1 33	SINGLE POST SIGN, F&I BRIDGE MOUNT INDEX 11870, 21-30 SF	AS	5	$ 14,000.00	$70000.00
0700 1 40	SINGLE POST SIGN, INSTALL	AS	5	$ 280.00	$1400.00
0700 1 50	SINGLE POST SIGN, RELOCATE	AS	10	$ 350.00	$3500.00
0700 1 60	SINGLE POST SIGN, REMOVE	AS	50	$ 70.00	$3500.00
0700 1 74	SINGLE POST SIGN, F&I CUSTOM, 31+ SF	AS	5	$ 4,900.00	$24500.00
0700 2 11	MULTI- POST SIGN, F&I GROUND MOUNT, UP TO 12 SF	AS	5	$ 7,000.00	$35000.00
0700 2 12	MULTI- POST SIGN, F&I GROUND MOUNT, 12-20 SF	AS	5	$ 11,900.00	$59500.00
0700 2 13	MULTI- POST SIGN, F&I GROUND MOUNT, 21-30 SF	AS	5	$ 13,440.00	$67200.00
0700 2 14	MULTI- POST SIGN, F&I GROUND MOUNT, 31-50 SF	AS	5	$ 14,700.00	$73500.00
0700 2 15	MULTI- POST SIGN, F&I GROUND MOUNT, 51-100 SF	AS	5	$ 19,600.00	$98000.00
0700 2 16	MULTI- POST SIGN, F&I GROUND MOUNT, 101-200 SF	AS	5	$ 26,600.00	$133000.00
0700 2 40	MULTI- POST SIGN, INSTALL	AS	5	$ 7,000.00	$35000.00
0700 2 50	MULTI- POST SIGN, F&I GROUND MOUNT, RELOCATE	AS	5	$ 7,000.00	$35000.00
0700 2 60	MULTI- POST SIGN, F&I GROUND MOUNT, REMOVE	AS	5	$ 1,400.00	$7000.00

0700 2 80	MULTI- POST SIGN, F&I GROUND MOUNT, REPAIR	AS	5	$ 5,600.00	$28000.00
0700 3101	SIGN PANEL, FURNISH & INSTALL GROUND MOUNT, UP TO 12 SF	EA	5	$ 560.00	$2800.00
0700 3102	SIGN PANEL, FURNISH & INSTALL GROUND MOUNT, 12-20 SF	EA	5	$ 1,120.00	$5600.00
0700 3103	SIGN PANEL, FURNISH & INSTALL GROUND MOUNT, 21-30 SF	EA	5	$ 2,100.00	$10500.00
0700 3104	SIGN PANEL, FURNISH & INSTALL GROUND MOUNT, 31-50 SF	EA	5	$ 2,800.00	$14000.00
0700 3105	SIGN PANEL, FURNISH & INSTALL GROUND MOUNT, 51-100 SF	EA	5	$ 5,600.00	$28000.00
0700 3106	SIGN PANEL, FURNISH & INSTALL GROUND MOUNT, 101-200 SF	EA	5	$ 11,200.00	$56000.00
0700 3201	SIGN PANEL, FURNISH & INSTALL OVERHEAD MOUNT, UP TO 12 SF	EA	5	$ 2,800.00	$14000.00
0700 3202	SIGN PANEL, FURNISH & INSTALL OVERHEAD MOUNT, 12-20 SF	EA	5	$ 3,500.00	$17500.00
0700 3203	SIGN PANEL, FURNISH & INSTALL OVERHEAD MOUNT, 21-30 SF	EA	5	$ 5,600.00	$28000.00
0700 3204	SIGN PANEL, FURNISH & INSTALL OVERHEAD MOUNT, 31-50 SF	EA	5	$ 7,000.00	$35000.00
0700 3205	SIGN PANEL, FURNISH & INSTALL OVERHEAD MOUNT, 51-100 SF	EA	5	$ 9,800.00	$49000.00
0700 3206	SIGN PANEL, FURNISH & INSTALL OVERHEAD MOUNT, 101-200 SF	EA	5	$ 14,000.00	$70000.00
0700 3401	SIGN PANEL, INSTALL, UP TO 12 SF	EA	5	$ 280.00	$1400.00
0700 3402	SIGN PANEL, INSTALL, 12-20 SF	EA	5	$ 350.00	$1750.00
0700 3403	SIGN PANEL, INSTALL, 21-30 SF,	EA	5	$ 420.00	$2100.00
0700 3404	SIGN PANEL, INSTALL, 31-50 SF	EA	5	$ 700.00	$3500.00
0700 3405	SIGN PANEL, INSTALL, 51-100 SF,	EA	5	$ 1,400.00	$7000.00
0700 3406	SIGN PANEL, INSTALL, 101-200 SF	EA	5	$ 2,100.00	$10500.00
0700 3501	SIGN PANEL, RELOCATE, UP TO 12 SF	EA	5	$ 350.00	$1750.00
0700 3502	SIGN PANEL, RELOCATE, 12-20 SF	EA	5	$ 490.00	$2450.00
0700 3503	SIGN PANEL, RELOCATE, 21-30 SF	EA	5	$ 700.00	$3500.00
0700 3504	SIGN PANEL, RELOCATE, 31-50 SF	EA	5	$ 980.00	$4900.00
0700 3505	SIGN PANEL, RELOCATE, 51-100 SF	EA	5	$ 3,500.00	$17500.00
0700 3506	SIGN PANEL, RELOCATE, 101-200 SF	EA	5	$ 7,000.00	$35000.00
0700 3601	SIGN PANEL, REMOVE, UP TO 12 SF	EA	5	$ 35.00	$175.00
0700 3602	SIGN PANEL, REMOVE, 12-20 SF	EA	5	$ 70.00	$350.00
0700 3603	SIGN PANEL, REMOVE, 21-30 SF	EA	5	$ 105.00	$525.00

0700 3604	SIGN PANEL, REMOVE, 31-50 SF	EA	5	$ 140.00	$700.00
0700 3605	SIGN PANEL, REMOVE, 51-100 SF	EA	5	$ 350.00	$1750.00
0700 3606	SIGN PANEL, REMOVE, 101-200 SF	EA	5	$ 14,000.00	$70000.00
0700 3624	SIGN PANEL, REMOVE, UP TO 50 SF WITH LIGHTING	EA	5	$ 14,000.00	$70000.00
0700 3625	SIGN PANEL, REMOVE, 51-100 SF WITH LIGHTING	EA	5	$ 16,800.00	$84000.00
0700 3626	SIGN PANEL, REMOVE, 101-200 SF WITH LIGHTING	EA	5	$ 21,000.00	$105000.00
0700 12 11	SIGN BEACON, F&I GROUND MOUNT- AC POWERED, ONE BEACON	AS	5	$ 21,000.00	$105000.00
0700 12 12	SIGN BEACON, F&I GROUND MOUNT- AC POWERED, TWO BEACONS	AS	5	$ 23,800.00	$119000.00
0700 12 21	SIGN BEACON, F&I GROUND MOUNT- SOLAR POWERED, ONE BEACON	AS	5	$ 18,900.00	$94500.00
0700 12 22	SIGN BEACON, F&I GROUND MOUNT- SOLAR POWERED, TWO BEACONS	AS	5	$ 21,000.00	$105000.00
0700 12 31	SIGN BEACON, F&I OVERHEAD MOUNT, ONE BEACON	AS	5	$ 35,000.00	$175000.00
0700 12 32	SIGN BEACON, F&I OVERHEAD MOUNT, TWO BEACONS	AS	5	$ 42,000.00	$210000.00
0700 12 50	SIGN BEACON, RELOCATE BEACON- SIGN TO REMAIN	AS	5	$ 14,000.00	$70000.00
0700 12 60	SIGN BEACON, REMOVE BEACON- SIGN TO REMAIN	AS	5	$ 5,600.00	$28000.00
0700 13 10	RETROREFLECTIVE SIGN STRIP- BACK OF RAIL ROAD CROSSBUCK SIGN BLADES	EA	5	$ 350.00	$1750.00
0700 13 12	RETROREFLECTIVE SIGN STRIP- FURNISH AND INSTALL, 2'	EA	5	$ 140.00	$700.00
0700 13 15	RETROREFLECTIVE SIGN STRIP- FURNISH AND INSTALL, 5'	EA	5	$ 175.00	$875.00
0701 17101	PROFILED THERMOPLASTIC,STANDARD- CONCRETE SURFACES, WHITE, SOLID,6"	GM	1	$ 11,900.00	$11900.00
0701 17201	PROFILED THERMOPLASTIC,STANDARD- CONCRETE SURFACES, YELLOW, SOLID,6"	GM	1	$ 11,900.00	$11900.00
0701 17221	PROFILED THERMOPLASTIC,STANDARD- CONCRETE SURFACES, YELLOW, SKIP,6"	GM	1	$ 4,200.00	$4200.00
0701 18101	PROFILED THERMOPLASTIC,STANDARD- ASPHALT SURFACES, WHITE, SOLID,6"	GM	1	$ 11,900.00	$11900.00
0701 18201	PROFILED THERMOPLASTIC,STANDARD- ASPHALT SURFACES, YELLOW, SOLID,6"	GM	1	$ 11,900.00	$11900.00
0701 18221	PROFILED THERMOPLASTIC,STANDARD- ASPHALT SURFACES, YELLOW, SKIP,6"	GM	1	$ 4,200.00	$4200.00
0705 10 1	OBJECT MARKER, TYPE 1	EA	5	$ 350.00	$1750.00
0705 10 2	OBJECT MARKER, TYPE 2	EA	5	$ 350.00	$1750.00
0705 10 3	OBJECT MARKER, TYPE 3	EA	5	$ 350.00	$1750.00
0705 10 4	OBJECT MARKER, TYPE 4	EA	5	$ 420.00	$2100.00
0705 11 1	DELINEATOR, FLEXIBLE TUBULAR	EA	50	$ 140.00	$7000.00

0705 11 2	DELINEATOR, NON-FLEXIBLE	EA	5	$ 140.00	$700.00
0705 11 3	DELINEATOR, FLEXIBLE HIGH VISABILITY MEDIAN	EA	5	$ 385.00	$1925.00
0705 11 4	DELINEATOR, FLEXIBLE HIGH PERFORMANCE	EA	5	$ 385.00	$1925.00
0706 1 3	RAISED PAVEMENT MARKER, TYPE B	EA	200	$ 8.40	$1680.00
0710 90	PAINTED PAVEMENT MARKINGS, FINAL SURFACE	LS	5	$ -	$0.00
0710 11101	PAINTED PAVEMENT MARKINGS, STANDARD, WHITE, SOLID, 6"	GM	1	$ 1,950.00	$1950.00
0710 11102	PAINTED PAVEMENT MARKINGS, STANDARD, WHITE, SOLID FOR INTERCHANGE AND URBAN ISLAND, 8"	GM	1	$ 2,250.00	$2250.00
0710 11103	PAINTED PAVEMENT MARKINGS, STANDARD, WHITE, SOLID FOR INTERCHANGE MARKINGS, 12"	GM	1	$ 3,750.00	$3750.00
0710 11123	PAINTED PAVEMENT MARKINGS, STANDARD, WHITE, SOLID, 12"	LF	3000	$ 3.00	$9000.00
0710 11124	PAINTED PAVEMENT MARKINGS, STANDARD, WHITE, SOLID, 18"	LF	2000	$ 3.00	$6000.00
0710 11125	PAINTED PAVEMENT MARKINGS, STANDARD, WHITE, SOLID, 24"	LF	2000	$ 3.00	$6000.00
0710 11131	PAINTED PAVEMENT MARKINGS, STANDARD, WHITE, SKIP, 10-30 OR 3-9 SKIP, 6" WIDE	GM	1	$ 900.00	$900.00
0710 11133	PAINTED PAVEMENT MARKING, STANDARD,WHITE, 3'-9' SKIP DROP LINE AND APPROACH TO TOLL PLAZA, 12" WIDE,	GM	1	$ 1,500.00	$1500.00
0710 11141	PAINTED PAVEMENT MARKINGS, STANDARD, WHITE, 2-4 DOTTED GUIDELINE/ 6-10 DOTTED EXTENSION, 6"	GM	1	$ 900.00	$900.00
0710 11160	PAINTED PAVEMENT MARKINGS, STANDARD, WHITE, MESSAGE	EA	25	$ 90.00	$2250.00
0710 11170	PAINTED PAVEMENT MARKINGS, STANDARD, WHITE, ARROWS	EA	25	$ 45.00	$1125.00
0710 11180	PAINTED PAVEMENT MARKINGS, STANDARD, WHITE, YIELD LINE	LF	500	$ 7.50	$3750.00
0710 11190	PAINTED PAVEMENT MARKINGS, STANDARD, WHITE, ISLAND NOSE	SF	100	$ 4.50	$450.00
0710 11201	PAINTED PAVEMENT MARKINGS, STANDARD, YELLOW, SOLID, 6"	GM	1	$ 1,950.00	$1950.00
0710 11202	PAINTED PAVEMENT MARKINGS, STANDARD, YELLOW, SOLID FOR INTERCHANGE AND URBAN ISLAND, 8"	GM	1	$ 2,250.00	$2250.00
0710 11203	PAINTED PAVEMENT MARKINGS, STANDARD, YELLOW, SOLID, 12"	GM	1	$ 3,750.00	$3750.00
0710 11223	PAINTED PAVEMENT MARKINGS, STANDARD, YELLOW, SOLID, 12"	LF	100	$ 1.50	$150.00
0710 11224	PAINTED PAVEMENT MARKINGS, STANDARD, YELLOW, SOLID, 18"	LF	300	$ 4.50	$1350.00
0710 11225	PAINTED PAVEMENT MARKINGS, STANDARD, YELLOW, SOLID, 24"	LF	100	$ 1.50	$150.00
0710 11231	PAINTED PAVEMENT MARKINGS, STANDARD, YELLOW, SKIP, 6"	GM	1	$ 900.00	$900.00
0710 11241	PAINTED PAVEMENT MARKINGS, STANDARD, YELLOW, 2-4 DOTTED GUIDELINE/6-10 DOTTED EXTENSION, 6"	GM	1	$ 900.00	$900.00
0710 11290	PAINTED PAVEMENT MARKINGS, STANDARD, YELLOW, ISLAND NOSE	SF	100	$ 4.50	$450.00
0710 11331	PAINTED PAVEMENT MARKINGS, STANDARD,BLACK, SKIP, 6"	GM	1	$ 1,125.00	$1125.00

0710 11333	PAINTED PAVEMENT MARKING, STANDARD, BLACK, 3'-9' DOTTED LANE DROP AND APPROACH TO TOLL PLAZA, 12"	GM	1	$ 1,125.00	$1125.00
0710 11341	PAINTED PAVEMENT MARKINGS, STANDARD, BLACK, 2-4 DOTTED GUIDELINE/ 6-10 DOTTED EXTENSION, 6"	GM	1	$ 1,125.00	$1125.00
0710 11421	PAINTED PAVEMENT MARKINGS, STANDARD, BLUE, SOLID FOR PARKING LOT- ACCESSIBLE MARKINGS, 6"	LF	100	$ 1.50	$150.00
0710 12231	PAINTED PAVEMENT MARKINGS, DURABLE, YELLOW, SKIP, 6"	GM	1	$ 7,920.00	$7920.00
0710 12421	PAINTED PAVEMENT MARKINGS, DURABLE, BLUE, SOLID FOR PARKING LOT-ACCESSIBLE MARKINGS, 6"	LF	100	$ 3.00	$300.00
0711 11102	THERMOPLASTIC, STANDARD, WHITE, SOLID, 8" FOR INTERCHANGE AND URBAN ISLAND	GM	1	$ 13,500.00	$13500.00
0711 11103	THERMOPLASTIC, STANDARD, WHITE, SOLID, 12" FOR INTERCHANGE MARKINGS	GM	1	$ 33,000.00	$33000.00
0711 11123	THERMOPLASTIC, STANDARD, WHITE, SOLID, 12" FOR CROSSWALK AND ROUNDABOUT	LF	2500	$ 7.50	$18750.00
0711 11124	THERMOPLASTIC, STANDARD, WHITE, SOLID, 18" FOR DIAGONALS AND CHEVRONS	LF	500	$ 10.50	$5250.00
0711 11125	THERMOPLASTIC, STANDARD, WHITE, SOLID, 24" FOR STOP LINE AND CROSSWALK	LF	1500	$ 13.50	$20250.00
0711 11130	THERMOPLASTIC, STANDARD, WHITE, VERTICAL DEFLECTION MARKING	EA	10	$ 600.00	$6000.00
0711 11140	THERMOPLASTIC, STANDARD, WHITE, VERTICAL DEFLECTION ADVANCED WARNING MARKING	EA	10	$ 600.00	$6000.00
0711 11141	THERMOPLASTIC, STANDARD, WHITE, 2-4 DOTTED GUIDELINE/ 6-10 GAP EXTENSION, 6"	GM	1	$ 6,000.00	$6000.00
0711 11143	THERMOPLASTIC, STANDARD, WHITE, 2-4 DOTTED GUIDELINE, 12" FOR ROUNDABOUT	GM	1	$ 12,000.00	$12000.00
0711 11160	THERMOPLASTIC, STANDARD, WHITE, MESSAGE OR SYMBOL	EA	20	$ 300.00	$6000.00
0711 11170	THERMOPLASTIC, STANDARD, WHITE, ARROW	EA	20	$ 135.00	$2700.00
0711 11180	THERMOPLASTIC, STANDARD, WHITE, YIELD LINE	LF	250	$ 15.00	$3750.00
0711 11224	THERMOPLASTIC, STANDARD, YELLOW, SOLID, 18" FOR DIAGONAL OR CHEVRON	LF	250	$ 10.50	$2625.00
0711 11241	THERMOPLASTIC, STANDARD, YELLOW, 2-4 DOTTED GUIDE LINE /6-10 DOTTED EXTENSION LINE, 6"	GM	1	$ 6,000.00	$6000.00
0711 11421	THERMOPLASTIC, STANDARD, BLUE, SOLID,6"	LF	100	$ 15.00	$1500.00
0711 14123	THERMOPLASTIC, PREFORMED, WHITE, SOLID, 12"	LF	1000	$ 13.50	$13500.00
0711 14125	THERMOPLASTIC, PREFORMED, WHITE, SOLID, 24"	LF	1000	$ 25.50	$25500.00
0711 14141	THERMOPLASTIC, PREFORMED, WHITE, 2-4 DOTTED GUIDELINE ON CONCRETE SURFACES	GM	1	$ 25,500.00	$25500.00
0711 14160	THERMOPLASTIC, PREFORMED, WHITE, MESSAGE	EA	5	$ 1,200.00	$6000.00
0711 14170	THERMOPLASTIC, PREFORMED, WHITE, ARROWS	EA	20	$ 375.00	$7500.00
0711 14191	THERMOPLASTIC, PREFORMED, 6" WHITE, RAILROAD DYNAMIC ENVELOPE	LF	100	$ 15.00	$1500.00
0711 14193	THERMOPLASTIC, PREFORMED, 12" WHITE ON ASPHALT PAVEMENT, RAILROAD DYNAMIC ENVELOPE	LF	250	$ 30.00	$7500.00
0711 14194	THERMOPLASTIC, PREFORMED, 12" WHITE WITH 4" OUTSIDE BLACK CONTRAST ON CONCRETE PAVEMENT, RAILROAD DYNAMIC ENVELOPE	LF	100	$ 37.50	$3750.00

0711 14341	THERMOPLASTIC, PREFORMED, BLACK, 2-4 DOTTED GUIDELINE ON CONCRETE SURFACES	GM	1	$ 25,500.00	$25500.00
0711 14560	THERMOPLASTIC, PREFORMED, WHITE WITH BLACK CONTRAST ON CONCRETE PAVEMENT, MESSAGE OR SYMBOL	EA	5	$ 2,250.00	$11250.00
0711 14570	THERMOPLASTIC, PREFORMED, WHITE WITH BLACK CONTRAST, ARROW ON CONCRETE SURFACE	EA	5	$ 1,200.00	$6000.00
0711 15101	THERMOPLASTIC, STANDARD-OPEN GRADED ASPHALT SURFACES WHITE, SOLID, 6"	GM	1	$ 10,500.00	$10500.00
0711 15102	THERMOPLASTIC, STANDARD-OPEN GRADED ASPHALT SURFACES, WHITE, SOLID, 8"	GM	1	$ 14,250.00	$14250.00
0711 15131	THERMOPLASTIC, STANDARD-OPEN GRADED ASPHALT SURFACES, WHITE, SKIP, 6",10-30 SKIP OR 3-9 LANE DROP	GM	1	$ 3,300.00	$3300.00
0711 15133	THERMOPLASTIC, STANDARD-OPEN GRADED ASPHALT SURFACES, WHITE, SKIP, 12"- APPROACH TO TOLL PLAZA OR 3-9 LANE DROP	GM	1	$ 7,500.00	$7500.00
0711 15201	THERMOPLASTIC, STANDARD-OPEN GRADED ASPHALT SURFACES, YELLOW, SOLID, 6"	GM	1	$ 10,500.00	$10500.00
0711 15202	THERMOPLASTIC, STANDARD-OPEN GRADED ASPHALT SURFACES YELLOW, SOLID, 8"	GM	1	$ 14,250.00	$14250.00
0711 15231	THERMOPLASTIC, STANDARD-OPEN GRADED ASPHALT SURFACES, YELLOW, SKIP, 6"	GM	1	$ 3,750.00	$3750.00
0711 16101	THERMOPLASTIC, STANDARD-OTHER SURFACES, WHITE, SOLID, 6"	GM	3	$ 10,500.00	$31500.00
0711 16102	THERMOPLASTIC, STANDARD-OTHER SURFACES, WHITE, SOLID, 8"	GM	1	$ 12,000.00	$12000.00
0711 16131	THERMOPLASTIC, OTHER SURFACES, WHITE, SKIP, 6",10-30 SKIP OR 3-9 LANE DROP	GM	1	$ 3,750.00	$3750.00
0711 16133	THERMOPLASTIC, STANDARD-OTHER SURFACES WHITE, SKIP, 12"- APPROACH TO TOLL PLAZA OR 3-9 LANE DROP	GM	1	$ 6,000.00	$6000.00
0711 16201	THERMOPLASTIC, STANDARD-OTHER SURFACES, YELLOW, SOLID, 6"	GM	3	$ 10,500.00	$31500.00
0711 16202	THERMOPLASTIC, STANDARD-OTHER SURFACES, YELLOW, SOLID, 8"	GM	1	$ 12,000.00	$12000.00
0711 16231	THERMOPLASTIC, STANDARD-OTHER SURFACES, YELLOW, SKIP, 6"	GM	1	$ 3,750.00	$3750.00
0711 17	THERMOPLASTIC, REMOVE EXISTING THERMOPLASTIC PAVEMENT MARKINGS: NON-CONFLICTING ONLY	SF	500	$ 15.00	$7500.00
0711 12131	THERMOPLASTIC, REFURBISHMENT, WHITE, SKIP, 6"	GM	1	$ 7,500.00	$7500.00
0711 12160	THERMOPLASTIC, REFURBISH, WHITE, MESSAGE	EA	5	$ 262.50	$1312.50
0711 12170	THERMOPLASTIC, REFURBISH, WHITE, ARROWS	EA	5	$ 105.00	$525.00
0711 12231	THERMOPLASTIC, REFURBISHMENT, YELLOW, SKIP, 6"	GM	1	$ 2,700.00	$2700.00
713103101	PERMANENT TAPE, WHITE, SOLID, 6" FOR CONCRETE BRIDGES	GM	1	$ 52,500.00	$52500.00
713103102	PERMANENT TAPE, WHITE, SOLID, 8" EXIT LANE AT INTERCHANGE ON CONCRETE PAVEMENT	GM	1	$ 67,500.00	$67500.00
713103103	PERMANENT TAPE, WHITE, SOLID DROP LANE MARKING, 12" FOR CONCRETE BRIDGES,	GM	1	$ 90,000.00	$90000.00
713103131	PERMANENT TAPE, WHITE, SKIP/DOTTED, 6" FOR CONCRETE SURFACES	GM	1	$ 22,500.00	$22500.00
713103133	PERMANENT TAPE, WHITE, SKIP, 12" WIDE 3'-9' DROP LANE ON CONCRETE SURFACES	GM	1	$ 45,000.00	$45000.00
713103201	PERMANENT TAPE, YELLOW, SOLID, 6" FOR CONCRETE BRIDGES	GM	1	$ 52,500.00	$52500.00

713103231	PERMANENT TAPE, YELLOW, 10-30 SKIP/ 3-9 DOTTED, 6" FOR CONCRETE SURFACES	GM	1	$ 22,500.00	$22500.00
713103331	PERMANENT TAPE, BLACK, SKIP/DOTTED, 6" FOR CONCRETE SURFACES	GM	1	$ 22,500.00	$22500.00
713103333	PERMANENT TAPE, BLACK, 3'-9' DROP LANE, 12" ON CONCRETE SURFACES	GM	1	$ 45,000.00	$45000.00
713107	PREFORMED/PERMANENT TAPE, REMOVE	SF	50	$ 15.00	$750.00
400143	CLEANING & COATING CONCRETE SURFACE, CLASS 5	SF	5		$0.00
906-173-7	SINGLE COMPONENT POLYURETHANE INJECTION	GAL	500		$0.00
906-173-8	TWO COMPONENT POLYURETHANE INJECTION	LB	10000		$0.00
MISCELLANEOUS LABOR, EQUIPMENT, MATERIAL, AND SUB-CONTRACTOR ITEMS					
	LABOR - FOREMAN	HR	1		$0.00
	LABOR - OPERATOR	HR	1		$0.00
	LABOR - TRUCK DRIVER	HR	1		$0.00
	LABOR - PIPE LAYERS (FOR PIPES < 48" DIA.)	HR	1		$0.00
	LABOR - LABORER	HR	1		$0.00
	EQUIPMENT - FOREMAN P/U WITH HAND TOOLS	HR	1		$0.00
	EQUIPMENT - JOB TRUCK WITH MANDATORY TOOLS*	HR	1		$0.00
	EQUIPMENT - CRANE (20 TON)	HR	1		$0.00
	EQUIPMENT - CRANE (60 TON)	HR	1		$0.00
	EQUIPMENT - TRACTOR & TRAILER (TRANSPORT)	HR	1		$0.00
	EQUIPMENT - TRACK HOE (TO 100 HP)	HR	1		$0.00
	EQUIPMENT - TRACK HOE (101 HP TO 170 HP)	HR	1		$0.00
	EQUIPMENT - RUBBER TIRED BACKHOE	HR	1		$0.00
	EQUIPMENT - WHEEL LOADER (TO 150 HP)	HR	1		$0.00
	EQUIPMENT - WHEEL LOADER (151 HP AND UP)	HR	1		$0.00
	EQUIPMENT - TRACK TYPE TRACTORS (TO 100 HP)	HR	1		$0.00
	EQUIPMENT - TRACK TYPE TRACTORS (101 HP AND UP)	HR	1		$0.00
	EQUIPMENT - DUMP TRUCK (TANDEM AXLE)	HR	1		$0.00
	EQUIPMENT - PLATE TAMP	HR	1		$0.00
	EQUIPMENT - 3" TRASH PUMP	HR	1		$0.00
	EQUIPMENT - 4" DOUBLE DIAPHRAGM PUMP	HR	1		$0.00
	EQUIPMENT - AIR COMPRESSOR (125 SCFM)	HR	1		$0.00
	EQUIPMENT - WELL POINT PUMP	HR	1		$0.00
	EQUIPMENT - 4" JET PUMP	HR	1		$0.00
	MATERIAL - 2500 PSI CONCRETE (UN-FORMED)	CY	1		$0.00
	MATERIAL - OFF SITE SELECT FILL	CY	1		$0.00
	MATERIAL - LIMEROCK BASE MATERIAL	TN	1		$0.00

	MATERIAL - #57 WASHED STONE	TN	1		$0.00
	MATERIAL - ASPHALT PAVING (1.5" THICK; TYPE S-3)	SY	1		$0.00
	MATERIAL - BAHIA SOD	SY	1		$0.00
	SUB-CONTRACTOR - WELDER WITH TRUCK	HR	1		$0.00
	SUB-CONTRACTOR - TRACTOR WITH 7' BUSH HOG	HR	1		$0.00

* Contractor Job Truck Mandatory Tools

	Tool	Minimum size	Quantity
1	Air compressor	20 CFM @ 90PSI	1
2	3/4" drive ratchet and socket set		1
3	1 inch drive air impact wrench		1
4	1 inch drive sockets	1-1/2" to 3"	1 each
5	Slug wrenches	1-1/2" to 3"	1
6	End wrenches	7/16" to 1-1/2"	2 each
7	Porta band saw w spare blades	4" opening	1
8	Sawzall w spare blades		1
9	Nylon slings 5,000 and 10,000 pound rated (vertical)	2" 2 ply/4" 2 ply	2 each
10	Grade 80 Chain 10,000 pound rated	1/2" X 10 ft	2
11	Clevis or Shackles 5 ton rated	5/8" alloy	4
12	Porta power 10 ton		1
13	Shovels- round and square point		3 each
14	Cutting torch set *see note*		1
15	Gas or diesel stick welder and accessories *see note*		1
16	Small diaphragm pump and accessories	2" suction	1
17	Tap and die set	1/2" to 2" NPT	1
18	Drill and bits for steel or ductile	1/2" to 2" NPT size	1 set
19	Pry bar	5 foot	1
20	Come along	2ton	2
21	Circular Saw and blades for cribbing/forms	7 1/2 inch	2
22	Generator 120/240 volt	3500 watt	1
23	Framing hammer and nails for forms		2
24	Screw gun and screws for forms and cribbing		1
25	Gas powered cutoff saw (K-12)	12inch	1
26	Chain saw for cribbing and for'ms	14 inch bar	1
27	Sledge hammers	4t/ and 6tl	1 each
28	Crew PPE to include Hard hat and gloves at minimum	as needed	per person

V. REFERENCES & MINIMUM QUALIFICATIONS

Provide at least three (3) or more professional, business references with which you have contracted to provide similar services in the past five (5) years. Include the name of the person, its organization, telephone number, fax number, and e-mail address. Include any governmental agencies, with the same contact and descriptive information for which you have provided similar service within the past five (5) years.

Provide a brief description of the history and capabilities of the firm. Describe the types of projects or services the firm performs/has performed and the dollar value of each. Provide information regarding your firm's ability to complete this project. Demonstrate that the firm's personnel have experience with similar projects.

Identify all unresolved and ongoing claims and disputes against your firm in excess of $500,000. Include any claims against the principals of your firm or any claims your company may have against a third party. Provide a history of litigation, including the outcomes, for the past five (5) years.

The responding firm shall provide a statement of assurance that the firm is not presently in violations of any statutes or regulatory rules that might have an impact on the firm's operations. All applicable laws and regulations of the State of Florida and ordinances and regulations of the City of St. Pete Beach will apply.

Provide the overall bonding capacity for the company and provide a history of any claims against the Proposer's previous bonds for the past five (5) years.

The City shall be the sole final judge of qualifications of Proposer to perform service and reserves the exclusive right to accept or reject any proposal as it deems to be in the best interests of the City. The City reserves the right to make such investigation, as it deems necessary, to determine the ability of any proposer to perform the work or service requested. Failure to comply with the requirements of this section may be grounds for rejecting a response.

"Please see Attachments"

CUSTOMER REFERENCES

City of Sarasota
Erik Isern, P.E.
1761 12th Street
Sarasota, FL 34236
Erik.Isern@SarasotaFL.gov
(941) 390-5078
(941) 263-6138

City of Venice
Peter Boers, Procurement Manager
401 West Venice Avenue
Venice, FL 34285
pboers@venicegov.com
(941) 486-2626
(941) 486-2790 fax

Sarasota County Capital Projects
Craig Pike, Project Manager / Administrator II
1001 Sarasota Center Blvd.
Sarasota, FL 34240
cpike@scgov.net
(941) 415-4201

Charlotte County
Jeff Keyser
18500 Murdock Circle
Port Charlotte, FL 33948
jeff.keyser@CharlotteCountyFL.gov
(941) 575-3614
(941) 575-3614

Lee County
Frank Laco, DOT/Engineering
2115 Second Street
Fort Myers, FL 33901
FLaco@leegov.com
(239) 533-9300
(239) 533-9445 fax

Lee County
Steve Fort Sr., Project Manager
2115 Second Street
Fort Myers, FL 33901
sfort@leegov.com
(239) 533-9300

DeSoto County BOCC
Cindy Talamantez, Purchasing Manager
201 E. Oak Street, Suite 203
Arcadia, FL 34266
c.talamantez@desotobocc.com
(863) 993-4816

Hendry County
Jorge Hernandez, Project Engineer
99 East Cowboy Way
LaBelle, FL 33975
Jorge.Hernandez@hendryfla.net
(863) 675-5222 office
(863) 612-4726 desk
(863) 674-2941 fax

City of St. Petersburg
Mike Gebler, PMP
P.O. Box 2842
St. Petersburg, FL 33731
Michael.Gebler@stpete.org
(727) 893-7197

Florida Department of Transportation
District Seven
Conrad Campbell, P.E.
11201 N. McKinley Drive
Tampa, FL 33612
(813) 975-6294

Florida Department of Transportation
Farhad Zafaranian
11201 N. Malcolm McKinley Dr.
Tampa, FL 33612
Farhad.zafaranian@dot.state.fl.us
(813) 446-6062
(813) 323-1139

Pinellas County
Brian Mowry, Sr. Dept. Administrative Manager
Building 16, 22211 U.S. Highway 19 North
Clearwater, FL 33765
bmowry@pinellas.gov
(727) 742-4085
(727) 464-8885

Pasco County
Manuel "Manny" Gomez, Senior PM
4454 Grand Blvd.
New Port Richey, FL 34652
magomez@pascocountyfl.net
(727) 834-3611 ext. 8519
(727) 457-8530

City of New Port Richey
Martin Field, Construction Services Manager
6132 Pine Hill Rd.
Port Richey, FL 34668
fieldm@cityofnewportrichey.org
(727) 359-9319
(727) 841-4543

City of Port Richey
Sal Licari, Operations Manager
6333 Ridge Rd.
Port Richey, FL 34668
s.licari@cityofportrichey.gov
(727) 816-1907
(727) 816-1900 Ext. 107

Florida Department of Transportation
District One
John Sands
801 N. Broadway Avenue
Bartow, FL 33830
(863) 519-2279
(863) 519-2661 fax

Polk County
Doug Gable, Engineering Manager
3000 Sheffield Road
Winter Haven, FL 33880
DougGable@polk-county.net
(863) 565-2285

Hardee County
Christopher Simpron, Public Works Director
205 Hanchey Road
Wauchula, FL 33873
Christopher.Simpron@hardeecounty.net
(863) 773-3272

Completed Contracts

AJAX PAVING INDUSTRIES OF FLORIDA LLC

Contract Amount	Classes of Work Codes	Year Completed	Where Located City-County	Name & Address of Official to Whom You Refer
$5,001,842.89		2024	E1S92 SR 43 (US 301) Manatee County	FDOT 605 Suwanee Street Tallahassee, FL 32399
$196,431.00		2024	E1V68-414506 Sarasota County	FDOT 605 Suwanee Street Tallahassee, FL 32399
$3,667,717.32		2024	T1836 SR 758 Sarasota County	FDOT 605 Suwanee Street Tallahassee, FL 32399
$120,780.00		2024	H1I08 - #57 I75 Manatee County	FDOT 605 Suwanee Street Tallahassee, FL 32399
$18,157.50		2024	H1I08 - #31 US 17	FDOT 605 Suwanee Street Tallahassee, FL 32399
$3,260,444.14		2024	E1V17 445475 SR776	FDOT 605 Suwanee Street Tallahassee, FL 32399
$3,978,102.12		2024	E1U97-447896 SR789	FDOT 605 Suwanee Street Tallahassee, FL 32399
$267,184.00		2024	H1210 Tw0 #8 Hurricane	FDOT 605 Suwanee Street Tallahassee, FL 32399
$3,310,645.19		2024	E1U98 SR 867, US41 & SR 84 Collier County	FDOT 605 Suwanee Street Tallahassee, FL 32399
$9,984,141.81		2024	T1815 SR 45 (US41) Lee County	FDOT 605 Suwanee Street Tallahassee, FL 32399
$4,902,299.54		2024	G0W99 Curve Safety Improve Collier County	FDOT 605 Suwanee Street Tallahassee, FL 32399
$5,707,871.98		2024	E1V61 SR25 (US27) Collier/Lee County	FDOT 605 Suwanee Street Tallahassee, FL 32399
$3,322,153.79		2024	T1846 SR 90 (US 41) Collier County	FDOT 605 Suwanee Street Tallahassee, FL 32399
$208,648.26		2024	T1845 SR 80 Hendry County	FDOT 605 Suwanee Street Tallahassee, FL 32399
$8,957,357.19		2024	T1825 SR 25 and SR 70 Polk	FDOT 605 Suwanee Street Tallahassee, FL 32399
$4,696,751.93		2024	T1814-445469-D121103B Polk	FDOT 605 Suwanee Street Tallahassee, FL 32399
$5,794,980.51		2024	E1V16 SR540 Polk	FDOT 605 Suwanee Street Tallahassee, FL 32399
$7,943,059.09		2024	E1V15 US98 (SR 700)	FDOT 605 Suwanee Street Tallahassee, FL 32399
$6,905,053.37		2024	T1838 SR 64 Hardee County	FDOT 605 Suwanee Street Tallahassee, FL 32399

Contract Amount	Classes of Work Codes	Year Completed	Where Located City-County	Name & Address of Official to Whom You Refer
$1,299,060.63		2024	E7Q75 CR597/Shoal Line	FDOT 605 Suwanee Street Tallahassee, FL 32399
$7,281,358.87		2024	E7N96 SR 694 Gandy Blvd Hillsborough County	FDOT 605 Suwanee Street Tallahassee, FL 32399
$5,376,461.94		2024	E7P96 SR 54 @ US 19 Pasco County	FDOT 605 Suwanee Street Tallahassee, FL 32399
$5,052,711.83		2023	E1S92 - US301 Manatee County	FDOT 605 Suwanee Street Tallahassee, FL 32399
$3,587,382.02		2023	T1836 - SR758 from SR 72 (Stickney Point Rd to Shadow Lawn Way Sarasota County	FDOT 605 Suwanee Street Tallahassee, FL 32399
$20,052,828.47		2023	T1676 SR 45 (US 41) Lee County	FDOT 605 Suwanee Street Tallahassee, FL 32399
$4,197,475.62		2023	T1834 SR 93 (I-75) Collier County	FDOT 605 Suwanee Street Tallahassee, FL 32399
$8,663,207.39		2023	T1841 SR25 (US27) Glades County	FDOT 605 Suwanee Street Tallahassee, FL 32399
$8,140,323.35		2023	H1I08 - Ian Hurricane Repairs Multiple Counties	FDOT 605 Suwanee Street Tallahassee, FL 32399
$4,664,000.00		2023	SR 688 - Pavement Only Resurfacing Pinellas County	FDOT 605 Suwanee Street Tallahassee, FL 32399
$4,276,307.87		2023	E8T75 -Suncoast Parkway Hernando County	FDOT 605 Suwanee Street Tallahassee, FL 32399
$382,400.00		2023	E7Q42 Simmons Loop to Big Bend Hillsborough County	FDOT 605 Suwanee Street Tallahassee, FL 32399
$375,800.00		2023	E7Q43 Summerfield Crossing Blvd Hillsborough County	FDOT 605 Suwanee Street Tallahassee, FL 32399
$452,700.00		2023	E7Q44 Summmerfield Crossing Harbor Haze Hillsborough County	FDOT 605 Suwanee Street Tallahassee, FL 32399
$229,500.00		2023	E7P84 SR600 Hillsborough County	FDOT 605 Suwanee Street Tallahassee, FL 32399
$500,000.00		2023	T7383 US 19 Repair Citrus County	David Nelson Construction 3483 Alt 19 Palm Harbor, FL 34683
$3,397,760.34		2023	E7016 US 92 Hillsborough County	FDOT 605 Suwanee Street Tallahassee, FL 32399
$229,500.00		2023	E7P84 - Fast Response Hillsborough County	FDOT 605 Suwanee Street Tallahassee, FL 32399
$21,358,192.62		2023	E7R15 US301 N of Lake St Charles Hillsborough County	FDOT 605 Suwanee Street Tallahassee, FL 32399
$5,184,769.99		2023	E8U17 Veterans Expressway Hillsborough County	FDOT 605 Suwanee Street Tallahassee, FL 32399
$1,030,376.00		2023	E1U10 SR 35 at Colbert Rd Polk County	FDOT 605 Suwanee Street Tallahassee, FL 32399
$12,306,212.00		2022	E7R15 - US 301/SR 45, SR 676A at Bloomingdale & I-75 DB Hillsboro County, FL	FDOT 605 Suwanee Street Tallahassee, FL 32399
$20,942,319.00		2022	FPN 201032 (T1709) Mill/Resurface/Widen SR 93 (I-75) Manatee Manatee County, FL	SACYR Construction Miami, FL
$2,778,928.00		2022	T7424 - CR 578 New Northern Alignment- 257298-5-52-01	FDOT 605 Suwanee Street Tallahassee, FL 32399

Contract Amount	Classes of Work Codes	Year Completed	Where Located City-County	Name & Address of Official to Whom You Refer
$9,180,244.00		2022	T7468- SR45/US41/Broad St.- 441386-FAP D720038B	FDOT 605 Suwanee Street Tallahassee, FL 32399

Completed Contracts

AJAX PAVING INDUSTRIES OF FLORIDA LLC

Contract Amount	Classes of Work Codes	Year Completed	Where Located City-County	Name & Address of Official to Whom You Refer
$5,052,711.83		2023	E1S92 - US301 Manatee County	FDOT 605 Suwanee Street Tallahassee, FL 32399
$3,587,382.02		2023	T1836 - SR758 from SR 72 (Stickney Point Rd to Shadow Lawn Way Sarasota County	FDOT 605 Suwanee Street Tallahassee, FL 32399
$20,052,828.47		2023	T1676 SR 45 (US 41) Lee County	FDOT 605 Suwanee Street Tallahassee, FL 32399
$4,197,475.62		2023	T1834 SR 93 (I-75) Collier County	FDOT 605 Suwanee Street Tallahassee, FL 32399
$8,663,207.39		2023	T1841 SR25 (US27) Glades County	FDOT 605 Suwanee Street Tallahassee, FL 32399
$8,140,323.35		2023	H1I08 - Ian Hurricane Repairs Multiple Counties	FDOT 605 Suwanee Street Tallahassee, FL 32399
$4,664,000.00		2023	SR 688 - Pavement Only Resurfacing Pinellas County	FDOT 605 Suwanee Street Tallahassee, FL 32399
$4,276,307.87		2023	E8T75 -Suncoast Parkway Hernando County	FDOT 605 Suwanee Street Tallahassee, FL 32399
$382,400.00		2023	E7Q42 Simmons Loop to Big Bend Hillsborough County	FDOT 605 Suwanee Street Tallahassee, FL 32399
$375,800.00		2023	E7Q43 Summerfield Crossing Blvd Hillsborough County	FDOT 605 Suwanee Street Tallahassee, FL 32399
$452,700.00		2023	E7Q44 Summmerfield Crossing Harbor Haze Hillsborough County	FDOT 605 Suwanee Street Tallahassee, FL 32399
$229,500.00		2023	E7P84 SR600 Hillsborough County	FDOT 605 Suwanee Street Tallahassee, FL 32399
$500,000.00		2023	T7383 US 19 Repair Citrus County	David Nelson Construction 3483 Alt 19 Palm Harbor, FL 34683
$3,397,760.34		2023	E7016 US 92 Hillsborough County	FDOT 605 Suwanee Street Tallahassee, FL 32399
$229,500.00		2023	E7P84 - Fast Response Hillsborough County	FDOT 605 Suwanee Street Tallahassee, FL 32399
$21,358,192.62		2023	E7R15 US301 N of Lake St Charles Hillsborough County	FDOT 605 Suwanee Street Tallahassee, FL 32399
$5,184,769.99		2023	E8U17 Veterans Expressway Hillsborough County	FDOT 605 Suwanee Street Tallahassee, FL 32399
$1,030,376.00		2023	E1U10 SR 35 at Colbert Rd Polk County	FDOT 605 Suwanee Street Tallahassee, FL 32399
$12,306,212.00		2022	E7R15 - US 301/SR 45, SR 676A at Bloomingdale & I-75 DB Hillsboro County, FL	FDOT 605 Suwanee Street Tallahassee, FL 32399
$20,942,319.00		2022	FPN 201032 (T1709) Mill/Resurface/Widen SR 93 (I-75) Manatee Manatee County, FL	SACYR Construction Miami, FL
$2,778,928.00		2022	T7424 - CR 578 New Northern Alignment- 257298-5-52-01	FDOT 605 Suwanee Street Tallahassee, FL 32399
$9,180,244.00		2022	T7468- SR45/US41/Broad St.- 441386-FAP D720038B	FDOT 605 Suwanee Street Tallahassee, FL 32399
$1,988,002.00		2021	E1S54 (SR 31) Charlotte Charlotte County	FDOT 605 Suwanee Street Tallahassee, FL 32399
$2,309,731.00		2021	T1789 SR45 (US41) Lee Lee County	FDOT 605 Suwanee Street Tallahassee, FL 32399
$1,786,500.00		2021	E1T47 - db - SR35 (US17) Hibiscus	FDOT

Contract Amount	Classes of Work Codes	Year Completed	Where Located City-County	Name & Address of Official to Whom You Refer
				605 Suwanee Street Tallahassee, FL 32399
$473,930.00		2021	438086 (T1779) 13th Ave at SR 55	MSB Services, LLC 3204 Lena Rd Bradenton, FL 34211
$187,855.00		2021	E1R18 Two #37 US 441 and NE 9	FDOT 605 Suwanee Street Tallahassee, FL 32399
$1,875,007.00		2021	T1747 SR 45 Sarasota 43355 Sarasota County	Bergeron Land Development, Inc. 19612 SW 69th Place Fort Lauderdale, FL 33332
$3,268,595.00		2021	FPN 198017 T1717 Mill/Resurface	Bergeron Land Development, Inc. 19612 SW 69th Place Fort Lauderdale, FL 33332
$766,832.00		2021	E1R18 SR 60 & 80 foot Rd	FDOT 605 Suwanee Street Tallahassee, FL 32399
$4,526,602.00		2021	E7R17 - I275 SR 93 Bus	FDOT 605 Suwanee Street Tallahassee, FL 32399
$1,145,423.00		2021	E7M17 - Ro - Mill/Resurface	FDOT 605 Suwanee Street Tallahassee, FL 32399
$2,383,694.00		2021	E7M95 Alt US 19	FDOT 605 Suwanee Street Tallahassee, FL 32399
$1,302,812.00		2021	E7M94 - SR674/SR45	FDOT 605 Suwanee Street Tallahassee, FL 32399
$891,067.00		2021	E7R25 Withlacoochee Trail	FDOT 605 Suwanee Street Tallahassee, FL 32399
$318,920.00		2021	T7466 SR573 S Dale Mabry Hillsborough County	FDOT 605 Suwanee Street Tallahassee, FL 32399
$868,111.00		2021	Two #1 - E7R11 Dale Mabry Hillsborough County	FDOT 605 Suwanee Street Tallahassee, FL 32399
$1,112,559.00		2021	T7446 SR 50 (Cortez Blvd)	FDOT 605 Suwanee Street Tallahassee, FL 32399

Contract Amount	Classes of Work Codes	Year Completed	Where Located City-County	Name & Address of Official to Whom You Refer
				21101 Design Parc Ln #103 Estero, FL 33928
$36,156.97		2020	Waste Management Repairs	17803 - Classics Plantation Estates HOA 3001 Executive Drive Suite 260 Clearwater, FL 33762
$141,025.00		2020	Barron Collier Highschool Track	34029 - Halfacre Construction Company 7015 Professional Pkwy E. Sarasota, FL 34240
$11,524,723.71		2020	T1722 SR 25 (US 27) Glades 438060 D118118B	25000 - FDOT 605 Suwanee Street Tallahassee, FL 32399
$58,463,650.80		2020	T1997 SR 80 Hendry 408286	25000 - FDOT 605 Suwanee Street Tallahassee, FL 32399
$2,960,704.57		2020	West Villages Parkway Intersection Improvements North Port, Sarasota County	82216 - West Villages Improvement District 2501 Burns Road Suite A Palm Beach Gardens, FL 33410
$11,247,918.06		2020	2019 County Paving Program Port Charlotte, Sarasota County	17700 - Charlotte County Purchasing 18500 Murdock Circle Port Charlotte, FL 33948
$1,049,558.32		2020	Taxiway "D" Extension Venice, Sarasota County	77000 - City of Venice 200 N Warfield Avenue Venice, FL 34285
$950,617.45		2020	FPN 439432 (T1753) D119009B Mill and Resurface (CA19-056) North Port, Sarasota County	25000 - FDOT 605 Suwanee Street Tallahassee, FL 32399
$240,831.37		2020	Routine Road Maintenance 2019 City of North Port - PO #48192 North Port, Sarasota County	56000 - City of North Port 1100 N. Chamberlain Blvd North Port, FL 34286
$1,214,745.21		2020	Venice Resurfacing Project, Phase 2 Venice, Sarasota County	77000 - City of Venice 200 N Warfield Avenue Venice, FL 34285
$43,000.00		2020	PGT Loading Area Venice, Sarasota County	60521 - PGT Industries, Inc 1070 Technology Drive Nokomis, FL 34275
$597,037.37		2020	Little Bullfrog Creek - ITB 17182 Misc Construction Project Hillsborough County, FL	34255 - Hillsborough County BOCC PO Box 1110 Tampa, FL 33601
$39,088.00		2020	WO20 - Balm Wimauma Resurfacing - ITB 17182 Misc Const Projec Hillsborough County, FL	34255 - Hillsborough County BOCC PO Box 1110 Tampa, FL 33601
$84,000.00		2020	Wo17 - BOCC Curb & Gutter Repair - ITB 17182 Misc Const Hillsborough County, FL	34255 - Hillsborough County BOCC PO Box 1110 Tampa, FL 33601
$1,368,000.00		2020	IFB-ML-19-055 - Little Road Pasco County, FL	59889 - Pasco County BOCC 38053 Live Oak Ave Dade City, FL 33523
$1,858,279.05		2020	IFB-ML-19-054 - Mitchell Blvd Pasco County, FL	59889 - Pasco County BOCC 38053 Live Oak Ave Dade City, FL 33523
$6,237,367.00		2020	SR 37 Polk County - FPN 434937 Polk County, FL	25000 - FDOT 605 Suwanee Street Tallahassee, FL 32399
$925,463.52		2020	WO 25 - Virginia Park - 14 C 35 Hillsborough County, FL	74121 - City of Tampa 306 E Jackson Street 2E Tampa, FL 33602
$1,176,903.29		2020	NW Regional Water Reclaimation Facility Expansion	20045 - Garney/Wharton- Smitch a Joint Venture 370 E Crown Point Rd Winter Garden, FL 34787
$4,372,157.44		2020	SR 45 (US41) (50th St) FPN 434848 Hillsborough County, FL	60600 - PCS Civil, INC 6920 Asphalt Ave Tampa, FL 33614
$953,552.41		2020	City of Pinellas Park Road Resurfac Pinellas County, FL	61594 - City of Pinellas Park PO Box 1100 Pinellas Park, FL 33780
$1,064,771.87		2020	Bay to Bay Blvd - Pavement Treatment Program Tampa, Hillsborough County	34255 - Hillsborough County BOCC PO Box 1110 Tampa, FL 33601
$700,239.80		2020	SWWRF Capacity Upgrades Tampa, Hillsborough County	34049 - The Haskell Company PO Box 45275 Jacksonville, FL 32202
$187,950.35		2020	Terminal Apron Rehabilitation - Sebring Airport Sebring, Desoto County	34224 - GLF Construction Corp 1428 Brickell Ave Miami, FL 33131
$987,716.73		2020	FPN 428957 (T7406) SR 93A (I75) Off Ramp Interchange	61950 - Prince Contracting Co

Contract Amount	Classes of Work Codes	Year Completed	Where Located City-County	Name & Address of Official to Whom You Refer
			Tampa, Hillsborough County	10210 Highland Manor Drive Suite 110 Tampa, FL 33610
$3,027,443.05		2020	2017/2018 Street Improvement Project - New Port Richey New Port Richey, Pasco County	61717 - City of New Port Richey 5919 Main Street New Port Richey, FL 34652
$68,918.00		2020	Demo of Red Side Rental Car Garage @ TIA Tampa, Hillsborough County	44480 - Kimmins Contracting Corp 1501 2nd Ave Tampa, FL 33605
$147,742.77		2020	Polk Pkwy Widening MP 18-22 Lakeland, Polk County	25000 - FDOT 605 Suwanee Street Tallahassee, FL 32399
$6,432,013.03		2019	FPN 434937-1-52-01 (E1P92) SR 37 From CR630 (Lithia Pinecrest) Polk County	FDOT/Keystone Civil 2635 Windguard Circle, Suite 102 Wesley Chapel, FL 33544
$6,851,830.78		2019	FPN 434765-1-52-01 (E7K19) SR 56 Extension, Pasco County	Cone & Graham, Inc. P.O. Box 310167 Tampa, FL 33680
$1,509,643.95		2019	FPN 436491-1-52-01 SR (T7409) 60/E. Kennedy, Downtown Tampa	FDOT 11201 N. McKinley Drive Tampa, FL 33612
$2,924,620.68		2019	FPN 434806-1-52-01 (T7401) SR 693/S. Pasadena Ave., Pinellas County	FDOT 11201 N. McKinley Drive Tampa, FL 33612
$7,298,572.25		2019	FPN 201032-6-52-01 & 201032-6-56-01 (T1664) SR 64 Interchange @ SR 93 (I-75) Bradenton, Manatee County	Prince Contracting, LLC 10210 Highland Manor Drive, Suite 110 Tampa, FL 33610
$2,179,806.79		2019	FPN 436580 (E1R06) Mill/Resurface/Widen SR 70 Desoto	Florida Department of Transportation - District 1 P.O. Box 1249 MS 1-8 Bartow, FL 33831-1249
$1,723,727.04		2019	FPN 439432 (T1753) D119009B Mill & Resurface (CA19-056)	Florida Department of Transportation - District 1 P.O. Box 1249 MS 1-8 Bartow, FL 33831-1249
$20,796,482.11		2019	2017 County Paving Program	Charlotte County Purchasing 18500 Murdock Circle Port Charlotte, FL 33948-1094
$2,124,098.61		2019	FPN 422710 (E1P91) Mill/Resurface/Widen US 41 Sarasota	Russell Engineering, Inc. 10704 Portal Crossing Bradenton, FL 34211
$12,539,709.14		2019	2018 County Paving Program	Charlotte County Purchasing 18500 Murdock Circle Port Charlotte, FL 33948-1094
$7,562,484.06		2019	CR-665 Widening And Resurfacing	Hardee County BOCC 412 W Orange St., Room 103 Wachula, FL 33873
$7,206,012.55		2019	FPN 436586 (T1706) Mill/resurface SR 35 and SR 64 Hardee	Florida Department of Transportation - District 1 P.O. Box 1249 MS 1-8 Bartow, FL 33831-1249
$2,384,669.95		2019	West Villages Parkway Intersection Improvements	West Villages Improvement District 19503 S West Villages Parkway, #A3 Venice, FL 34293
$1,929,250.64		2019	Resurfacing FY18, Increment 2 (Sarasota County)	Sarasota County Trans V017300 1001 Sarasota Center Blvd. Sarasota, FL 34240
$49,312,465.39		2019	E1Q29 SR 82 Lee	Florida Department of Transportation - District 1 P.O. Box 1249 MS 1-8 Bartow, FL 33831-1249
$26,496,890.50		2019	T1687 SR 93 (I-75) Charlotte 413042	Florida Department of Transportation - District 1 P.O. Box 1249 MS 1-8 Bartow, FL 33831-1249
$915,852.79		2019	E1Q77 Golden Gate Estates 8th St NE Bridge Collier	Bergeron Land Development, Inc. 19612 SW 69 Place Fort Lauderdale, FL 33332
$1,088,005.44		2019	Major Road Resurfacing FY2019	City of Cape Coral 1015 Cultural Park Blvd Cape Coral, FL 33990
$5,064,195.00		2018	FPN 198017 (T1606) Add Lanes/Mill/Resurface SR 45A Sarasota Sarasota County	Bergeron Land Development, Inc. 19612 SW 69 Place Fort Lauderdale, FL 33332
$2,059,531.00		2018	Midway Boulevard Widening- Phase II Charlotte County	Forsberg Construction Inc. 645 Charlotte Street Punta Gorda, FL 33950

Contract Amount	Classes of Work Codes	Year Completed	Where Located City-County	Name & Address of Official to Whom You Refer
$14,671,706.00		2018	FPN 431316 (T1647) Mill/Resurface/Widen SR 45 (US 41) Charlo Charlotte County	Florida Department of Transportation - District 1 P.O. Box 1249 MS 1-8 Bartow, FL 33831-1249
$23,769,328.00		2018	2016 County Paving Program Charlotte County	Charlotte County Purchasing 18500 Murdock Circle Port Charlotte, FL 33948-1094
$4,912,660.00		2018	FPN 414547 (T1650) Widen/Reconstruction SR 35 (US 17) Hardee Hardee County	Watson Civil Construction, Inc. 319 West Town Place Suite 25 St. Augustine, FL 32092
$1,425,312.00		2018	Arcadia Street Rehab RFP Bid No.2016-02 Desoto County	City of Arcadia PO Box 1000 Arcadia, FL 34266
$4,579,524.00		2018	Venice Rehabilitation Of Public Use Aircraft Parking Aprons Sarasota County	City of Venice 401 West Venice Avenue Venice, FL 34285
$4,151,704.00		2018	Resurfacing FY 17, Area O&P Sarasota County	Sarasota County Trans V017300 1001 Sarasota Center Blvd. Sarasota, FL 34240
$20,004,380.00		2018	D/B Golden Gate Boulevard 4-Lane, East Of Wilson Boulevard Collier County	Collier BOCC 2671 Airport Road Court Plaza 3 Naples, FL 34112
$27,028,969.00		2018	T1598 SR 93 (I-75) Charlotte & Sarasota 413044 Sarasota & Charlotte County	Astaldi Construction Corporation 8220 SR 84 Suite 300 Davie, FL 33324
$10,552,837.00		2018	Rehab Of Runway 5-23 & Assoc. Taxiways At Page Field Lee County	Owen-Ames-Kimball Company 11941 Fairway Lakes Drive Fort Myers, FL 33913-8338
$6,229,008.00		2018	E1P89 SR 35 (US 17) Desoto 436920 Desoto County	Florida Department of Transportation - District 1 P.O. Box 1249 MS 1-8 Bartow, FL 33831-1249
$1,137,219.00		2018	Del Prado Boulevard Resurfacing Lee County	Lee County Bd of Commissioners 1500 Monroe Street Fort Myers, FL 33901
$1,292,367.00		2018	Rehab Of Runway 13-31 & Assoc. TW's At Page Field Airport P2 Lee County	Owen-Ames-Kimball Company 11941 Fairway Lakes Drive Fort Myers, FL 33913-8338
$2,208,085.00		2018	Aspen Blvd & Birchwood Pkwy In Port LaBelle Resurfacing Proj Glades County	Glades County BCC PO Box 395 Moore Haven, FL 33471
$3,214,889.00		2018	E1Q75 SR 29 Hendry 436598 Hendry County	Florida Department of Transportation - District 1 P.O. Box 1249 MS 1-8 Bartow, FL 33831-1249
$1,819,211.00		2018	Automated People Mover Slip Ramp Hillsborough County	Kimmins Contracting Corp 1501 2nd Avenue Tampa, FL 33605
$5,458,500.00		2018	FPN 431492 (E7K97) Mill/Resurface 40th Street / US 41 Hills Hillsborough County	Florida Department of Transportation - District 7 11201 N. McKinley Drive MS 7-1300 Tampa, FL 33612
$8,500,714.00		2018	Taxiway Rehabilitation @ PIE Phase 2 - P.O. 424804 Pinellas County	Pinellas County BOCC PO Box 2438 Clearwater, FL 33757
$3,052,331.00		2018	Programmed Maint. Pvmt Rehab (Massachusetts/Ridge/Starkey) Pasco County	Pasco County Purchasing BCC 38053 Live Oak Avenue Dade City, FL 33523-3894
$7,552,224.00		2018	FPN 434929 (T1678) Mill/Resurface SR 93 (I-75) Manatee Manatee County	Florida Department of Transportation - District 1 P.O. Box 1249 MS 1-8 Bartow, FL 33831-1249
$1,324,073.00		2018	W. Bloomingdale Ave (945) - Hillsborough Co Pav't Treatment Hillsborough County	Hillsborough County Board of County Commissioners BOCC Hillsborough County Florida PO Box 1110 Tampa FL 33601
$1,355,243.00		2018	Pasco Cty Asphalt Resurfacing & Pavement Rehab IFB-DL-15-252 Pasco County	Asphalt Paving Systems 9021 Wire Road Zephyrhills, FL 33540
$1,004,425.00		2018	Treasure Island Causeway Trail Project No. 13075-112 Pinellas County	City of St Petersburg PO Box 1257 St Petersburg, FL 33731-1257

Ajax Paving
Industries of Florida, LLC

An Equal Opportunity Employer

One Ajax Drive • North Venice, FL 34275
Main: 941.486.3600

Ajax Paving Industries of Florida, LLC was established in 1981 (43 Years in Business) and is the precision paving specialist of Southwest Florida. Our Team of professionals are extremely knowledgeable in the specific materials, methodology and criteria for paving in Florida. Ajax's four area offices are located in Tampa, North Venice, Lake Wales and Fort Myers, and the company has eight state-of-the-art hot mix asphalt plants in Southwest Florida. Currently, Ajax employs approximately 485 professional, administrative and construction personnel and maintains an annual work volume of approximately $350M.

Ajax self-performs earthwork, storm drainage, concrete flatwork, maintenance of traffic operations, and asphalt paving projects. Ajax's corporate mission statement and key to Ajax's success is "To provide construction services and products which, when measured, exceed customers' expectations."

Currently, Ajax Paving Industries of Florida, LLC is Florida Department of Transportation (FDOT) prequalified in the following work classes:

- DRAINAGE
- FLEXIBLE PAVING
- GRADING
- GRASSING
- ELECTRICAL
- SEEDING AND SODDING
- GUARDRAIL
- HOT PLANT-MIXED BITUM. COURSES
- INTERMEDIATE BRIDGES
- MINOR BRIDGES
- PORTLAND CEMENT CONCRETE ROADWAY PAVING
- ROADWAY SIGNING
- SIDEWALK
- MILLING
- TRAFFIC SIGNALS
- UNDERGROUND UTILITIES (WATER & SEWER).

Organization Structure

Ajax Paving Industries of Florida, LLC will be the contracting entity for this contract. Ajax has been building infrastructure and transportation projects in Florida for the past 43 years and has a proven history of managing and delivering complex projects on time and within budget. Ajax is very experienced with the traditional design bid projects, DB delivery , specifications, quality control (QC) documentation requirements, and project administration needs and has consistently earned high marks for those efforts. Ajax currently owns eight Hot Mix Asphalt (HMA) plants. Ajax will self-perform MOT, embankment operations, drainage installation, concrete paving, and asphalt paving tasks.

Experience with Complex/ Fast Track Projects

Emergency and Design-Build projects are renowned for their expedited timelines, wherein design and permitting services play a pivotal role in the initial phases of all these contracts. With an vast portfolio of infrastructure projects, our expertise enables us to swiftly engage and initiate design and permitting services immediately upon contract execution.

Ajax was awarded post Hurricane Ian "phased" or progressive design-build contracts for emergency repair and permanent reconstruction work at the Sanibel Island Causeway Bridge and the Pine Island and Little Pine Island Bridges. Due to the nature and need of the work, these projects are on more expedited timelines than typical projects. Emergency repair work commenced on the Sanibel Island Causeway approach project mere days after Hurricane Ian made landfall in September 2022. The causeway bridge was opened 19 days after the storm, and design work for permanent shoring/repairs began immediately following the opening. Our team identified the time-sensitive environmental permits required and prepared first-phase work packages in order for construction to immediately begin. Subsequent work packages are continuously designed and constructed through the next 6 months.

Ajax is also managing the Pine Island (Matlatcha) Causeway repairs, as it was completely washed out by Hurricane Ian. As part of this project, the Little Pine Island Bridge will be completely replaced, with construction expected to be completed by Summer 2025. Ajax's flexibility, innovation and communication were key to delivering these phased DB projects totaling more than $80 million on fast tracked schedules.

Environmental Record

Ajax is committed to environmental stewardship and assigns a construction representative to each project to ensure compliance. Management staff are trained and certified in the National Pollutant Discharge Elimination System (NPDES) Compliance. In the last 10 years, Ajax has zero noncompliance violations for Erosion and Sedimentation Control Plans or permit mandates. Ajax scored 12 out of 12 in FDOT Category 7, Environmental Compliance, on similar projects. Our Team will seek opportunities to minimize the project's impact to the environment, by providing enhanced erosion control measures to protect adjacent wetlands. Environmental compliance will be the responsibility of our Construction Project Superintendent, Ralph Bridges, who will perform weekly environmental audits and discuss regulatory compliance with construction personnel at our weekly "toolbox talks" and progress meetings.

Subconsultant Relationships

As a leader in alternative delivery, Ajax has developed and continues to maintain close relationships with design consultants. Currently, Ajax has 15 on-going design build projects with 12 different consultants. This diversified approach allows Ajax to opportunity to strategically select the best consultant for the task. For example, Ajax selects local smaller firms for contracts under $10M in contract value. For more complex projects, Ajax will select larger statewide or national firm to deliver. Below is a list for active consultant relationships in alphabetical order:

American Structure Point
BCC, Inc
Burgess & Niple, Inc
CORE Engineering
D Squared Infrastructure (DBE)
Greenman- Peterson, Inc.
HDR, Inc
Kimley-Horn & Associates
Lighthouse Engineering (SBE)
Patel Greene & Associates (DBE)
RS&H, Inc.
Stantec
Transystems, Inc.
VHB, Inc.
Wade Trim, Inc
WGI, Inc.
WSP, Inc



VI. CONTRACTOR'S PROPOSAL SUBMITTAL

The company that is submitting a proposal declares that it has extensive experience providing Task Work Order driven Civil On-Call Construction Services.

The undersigned, as Proposer, hereby declares that the only person or persons interested in the Proposal as principal or principals are named herein, and that no person other than herein mentioned has any interest in the Proposal or in the Agreement to be entered into; that this Proposal or Agreement is made without connection with any other person, company, or parties making a Proposal; and that it is in all respects fair and in good faith without collusion or fraud.

The Proposer further declares that they have examined the site of the work and informed themselves fully in regard to all conditions pertaining to the place where the work is to be done; that they have examined the Plans and Specifications for the work and Contract Documents relative thereto, and have read all special provisions furnished prior to the opening of proposals; and that they have satisfied themselves relative to the materials to be supplied and work to be performed.

The Proposer proposes and agrees, if the Proposal is accepted, to contract with the City of St. Pete Beach, Florida, in the form of an Agreement specified for **"Civil On Call Construction Services"** in St. Pete Beach, Florida, in full and complete accordance with the shown, noted, described, and reasonably intended requirements of the Plans, Specifications, and Contract Documents, to the full and entire satisfaction of the City of St. Pete Beach, Florida.

The successful Proposer shall be required to utilize the template Agreement in this Request for Proposals (RFP) and any questions regarding the Agreement must be addressed during the RFP process before submittal. The City reserves the right to respond or not respond to questions in the form of an addendum.

The Proposer proposes to furnish all materials, equipment, labor, and perform the work submitted in their proposal schedule for the City of St. Pete Beach **"Civil On Call Construction Services."**

COMPANY: Ajax Paving Industries of Florida, LLC DATE: 4/7/2026

ADDRESS: One Ajax Drive, North Venice FL, 34275 PHONE: 941-486-3600

PROPOSER: Christie Alvaro NAME: Christie Alvaro, Vice President of Estimating

(SIGNATURE) (PRINT NAME & TITLE)

AJAX PAVING INDUSTRIES OF FLORIDA LLC CORPORATE SEAL 2008 FLORIDA

STATE OF FLORIDA
COUNTY OF Sarasota

The foregoing instrument was sworn to (or affirmed), subscribed, and acknowledged before me by means of ☑ physical presence or ☐ online notarization, this 7th day of April, 2026, by Christie Alvaro, who is personally known to me or has produced N/A personally known as identification.

(SEAL)

JESSICA CANON
Notary Public - State of Florida
Commission # HH 427115
My Comm. Expires Jul 27, 2027
Bonded through National Notary Assn.

Notary Public – State of Florida

Jessica Canon/#HH 427115 7/27/2027
(Print, Type, Stamp, or Commissioned Name of Notary Public)

SUBMIT PROPOSAL TO: Electronically via Bonfire only

VII. PUBLIC ENTITY CRIMINAL AFFIDAVIT

SWORN STATEMENT – PUBLIC ENTITY CRIMES

PURSUANT TO § 287.133 (3)(a), FLORIDA STATUTES, ON PUBLIC ENTITY CRIMES
THE FORM MUST BE SIGNED AND SWORN TO IN THE PRESENCE OF A NOTARY PUBLIC OR OTHER OFFICIAL AUTHORIZED TO ADMINISTER OATHS.

1. This sworn statement is submitted to: City of St. Pete Beach

   by: Christie Alvaro, Vice President of Estimating
   (Print individual's name and title)

   for: Ajax Paving Industries of Florida, LLC
   (Print name of entity submitting sworn statement)

   at: One Ajax Drive, North Venice FL, 34275
   (Business address)

   and (if applicable), its Federal Employer Identification Number (FEIN):

   26-1871966
   (FEIN)
   or, if the entity has no FEIN, include the Social Security Number:

   _____
   (SSN)

   by the individual signing this sworn statement:
   (Signature) Christie Alvaro 2008

2. I understand that a "public entity crime" as defined in § 287.133 (1)(g), Fla. Stat., means a violation of any State or Federal law by a person with respect to and directly related to the transaction of business with any public entity or with an agency or political subdivision of any other state or of the United States including, but not limited to, any proposal or contract for goods or services, any lease for real property, or any contract for the construction or repair of a public building or public work, involving antitrust, fraud, theft, bribery, collusion, racketeering, conspiracy, or material misrepresentation.

3. I understand that "convicted" or "conviction" as defined in § 287.133 (1)(b), Fla. Stat., means a finding of guilt or a conviction of public entity crime with or without an adjudication of guilt in any Federal or State trial court of record relating to charges brought by indictment or information after July 1, 1989, as a result of a jury verdict, non-jury trial, or entry of a plea of guilty or nolo contendere.

4. I understand that an "affiliate" as defined in § 287.133 (1)(a), Fla. Stat., means:
   a. A predecessor or successor of a person convicted of a public entity crime or
   b. An entity under the control of any natural person who is active in the management of the entity and who has been convicted of a public entity crime. The term "affiliate" includes those officers, directors, executives, partners, shareholders, employees, members, and agents who are active in the management of an affiliate. The ownership by one (1) person of shares constituting a controlling interest in another person or a pooling of equipment or income among persons when not for fair market value under the arm's length agreement, shall be a prima facie case that one (1) person controls another person. A person who knowingly enters into a joint venture with a person who has been convicted of a public crime in Florida during the preceding thirty-six (36) months shall be considered an affiliate.

5. I understand that a "person" as defined in Section 287.133 (1)(e), Fla. Stat., means any natural person or any entity organized under the laws of any state or of the United States with the legal power to enter into a binding contract and which proposals or applies to proposal on contracts let by a public entity, or which otherwise transacts or applies to transact business with a public entity. The term "person" includes those officers, directors, executives, partners, shareholders, employees, members, and agents who are active in management of an entity.

6. Based on information and belief, the **statement which I have marked below is true** in relation to the entity submitting this sworn statement (indicate which statement applies).

☑ Neither the entity submitting this sworn statement, nor any of its officers, directors, executives, partners, shareholders, employees, members, or agents who are active in the management of the entity nor any affiliate of the entity has been charged with and convicted of a public entity crime subsequent to July 1, 1989.

☐ The entity submitting this sworn statement or one (1) or more of its officers, directors, executives, partners, shareholders, employees, members, or agents who are active in the management of the entity or an affiliate of the entity has been charged with and convicted of a public entity crime subsequent to July 1, 1989.

☐ The entity submitting this sworn statement or one (1) or more of its officers, directors, executives, partners, shareholders, employees, members, or agents who are active in the management of the entity or an affiliate of the entity has been charged with and convicted of a public entity crime subsequent to July 1, 1989. However, there has been a subsequent proceeding before a Hearing Office of the State of Florida, Division of Administrative Hearings and the Final Order entered by the Hearing Officer determined that it was not in the public interest to place the entity submitting this sworn statement on the convicted vendor list (attach a copy of the final order).

I UNDERSTAND THAT THE SUBMISSION OF THIS FORM TO THE CONTRACTING OFFICE FOR THE PUBLIC ENTITY IDENTIFIED IN PARAGRAPH 1 ABOVE IS FOR THE PUBLIC ENTITY ONLY AND THAT THIS FORM IS VALID THROUGH DECEMBER 31 OF THE CALENDAR YEAR IN WHICH IT IS FILED. I ALSO UNDERSTAND THAT I AM REQUIRED TO INFORM THE PUBLIC ENTITY PRIOR TO ENTERING INTO A CONTRACT IN EXCESS OF THE THRESHOLD AMOUNT PROVIDED IN SECTION 287.017, FLORIDA STATUTES, FOR CATEGORY TWO OF ANY CHANGE IN THE INFORMATION CONTAINED IN THIS FORM.

STATE OF FLORIDA
COUNTY OF Sarasota

The foregoing instrument was sworn to (or affirmed), subscribed, and acknowledged before me by means of ☑ physical presence or ☐ online notarization, this 7th day of April, 2026, by Christie Alvaro, who is personally known to me or has produced N/A personally known as identification.

(SEAL)

JESSICA CANON
Notary Public - State of Florida
Commission # HH 427115
My Comm. Expires Jul 27, 2027
Bonded through National Notary Assn.

Notary Public - State of Florida

Jessica Canon/#HH 427115 7/27/2027
(Print, Type, Stamp, or Commissioned Name of Notary Public)

VIII. NON-COLLUSION AFFADAVIT

STATE OF Florida COUNTY OF Sarasota

I state that I Christie Alvaro (Name and Title) of Ajax Paving Industries of Florida, LLC (Name of Firm),

I am authorized to make this affidavit on behalf of my firm and its owner, directors and officers. I am the person responsible in my firm for the price(s) and amount(s) of this Response, and the preparation of the Response. I state that:

1. The price(s) and amount(s) of this Response have been arrived at independently and without consultation, communication or agreement with any other Provider, potential provider, Proposal, or potential Proposal.

2. Neither the price(s) nor the amount(s) of this Response, and neither the approximate price(s) nor approximate amount(s) of this Response, have been disclosed to any other firm or person who is a Provider, potential Provider, Proposal, or potential Proposal, and they will not be disclosed before Proposal opening.

3. No attempt has been made or will be made to induce any firm or persons to refrain from submitting a Response for this contract, or to submit a price(s) higher that the prices in this Response, or to submit any intentionally high or noncompetitive price(s) or other form of complementary Response.

4. The Response of my firm is made in good faith and not pursuant to any agreement or discussion with, or inducement from, any firm or person to submit a complementary or other noncompetitive Response.

5. Ajax Paving Industries of Florida, LLC, its affiliates, subsidiaries, officers, director, and employees (Name of Firm) are not currently under investigation, by any governmental agency and have not in the last three years been convicted or found liable for any act prohibited by State or Federal law in any jurisdiction, involving conspiracy or collusion with respect to Proposal, on any public contract, except as follows:

I state that I and the named firm understand and acknowledge that the above representations are material and important, and will be relied on by the State of Florida for which this Response is submitted. I understand and my firm understands that any misstatement in this affidavit is, and shall be treated as, fraudulent concealment from the State of Florida of the true facts relating to the submission of responses for this contract.

Name of Organization: Ajax Paving Industries of Florida, LLC Signed By: Christie Alvaro

Print Name: Christie Alvaro, Vice President of Estimating

The foregoing instrument was sworn to (or affirmed), subscribed, and acknowledged before me by means of ☑ physical presence or ☐ online notarization, this 7th day of April, 2026, by Christie Alvaro, who is personally known to me or has produced N/A personally known as identification.

(SEAL)

Notary Public – State of Florida

Jessica Canon/#HH 427115 7/27/2027
(Print, Type, Stamp, or Commissioned Name of Notary Public)

JESSICA CANON
Notary Public - State of Florida
Commission # HH 427115
My Comm. Expires Jul 27, 2027
Bonded through National Notary Assn.

THE AMERICAN INSTITUTE OF ARCHITECTS

AIA Document A310

Bid Bond

KNOW ALL MEN BY THESE PRESENTS, that we

Ajax Paving Industries of Florida LLC
One Ajax Drive,North Venice, FL 34275

as Principal, hereinafter called Principal, and

Liberty Mutual Insurance Company
175 Berkeley Street,Boston, MA 02116

a corporation duly organized under the laws of the State of **Massachusetts**
as Surety, hereinafter called Surety, are held and firmly bound unto

City of St. Pete Beach
155 Corey Avenue ,St. Pete Beach , FL 33706

as Obligee, hereinafter called Obligee, in the sum of **Five Percent of Accompanying Bid**

Dollars (**5% of Bid**

for the payment of which sum well and truly to be made, the said Principal and the said Surety, bind ourselves, our heirs, executors, administrators, successors and assigns, jointly and severally, firmly by these presents.

WHEREAS, the Principal has submitted a bid for (Here insert full name, address and description of project)

Civil On Call Construction Services

NOW, THEREFORE, if the Obligee shall accept the bid of the Principal and the Principal shall enter into a Contract with the Obligee in accordance with the terms of such bid, and give such bond or bonds as may be specified in the bidding or Contract Documents with good and sufficient surety for the faithful performance of such Contract and for the prompt payment of labor and material furnished in the prosecution thereof, or in the event of the failure of the Principal to enter such Contract and give such bond or bonds, if the Principal shall pay to the Obligee the difference not to exceed the penalty hereof between the amount specified in said bid and such larger amount for which the Obligee may in good faith contract with another party to perform the Work covered by said bid, then this obligation shall be null and void, otherwise to remain in full force and effect.

Signed and sealed this **8th** day of **April**, **2026**.

Ajax Paving Industries of Florida LLC

(Witness)

(Principal) (Seal)

(Title) Vice President of Estimating

Liberty Mutual Insurance Company

(Witness)

(Surety) (Seal)

Holly Nichols ,Attorney in Fact (Title)

POWER OF ATTORNEY

Liberty Mutual Insurance Company
The Ohio Casualty Insurance Company
West American Insurance Company

Certificate No: **8213450-013068**

KNOWN ALL PERSONS BY THESE PRESENTS: That The Ohio Casualty Insurance Company is a corporation duly organized under the laws of the State of New Hampshire, that Liberty Mutual Insurance Company is a corporation duly organized under the laws of the State of Massachusetts, and West American Insurance Company is a corporation duly organized under the laws of the State of Indiana (herein collectively called the "Companies"), pursuant to and by authority herein set forth, does hereby name, constitute and appoint, Nicholas Ashburn; Robert D. Heuer; Paul H. Hurley; Michael D. Lechner; Mark Madden; Richard McGregor; Holly Nichols; Jason Rogers

all of the city of Rochester state of MI each individually if there be more than one named, its true and lawful attorney-in-fact to make, execute, seal, acknowledge and deliver, for and on its behalf as surety and as its act and deed, any and all undertakings, bonds, recognizances and other surety obligations, in pursuance of these presents and shall be as binding upon the Companies as if they have been duly signed by the president and attested by the secretary of the Companies in their own proper persons.

IN WITNESS WHEREOF, this Power of Attorney has been subscribed by an authorized officer or official of the Companies and the corporate seals of the Companies have been affixed thereto this 25th day of March, 2025.

Liberty Mutual Insurance Company
The Ohio Casualty Insurance Company
West American Insurance Company

By: _____
Nathan J. Zangerle, Assistant Secretary

State of PENNSYLVANIA
County of MONTGOMERY ss

On this 25th day of March, 2025 before me personally appeared Nathan J. Zangerle, who acknowledged himself to be the Assistant Secretary of Liberty Mutual Insurance Company, The Ohio Casualty Company, and West American Insurance Company, and that he, as such, being authorized so to do, execute the foregoing instrument for the purposes therein contained by signing on behalf of the corporations by himself as a duly authorized officer.

IN WITNESS WHEREOF, I have hereunto subscribed my name and affixed my notarial seal at Plymouth Meeting, Pennsylvania, on the day and year first above written.

Commonwealth of Pennsylvania - Notary Seal
Teresa Pastella, Notary Public
Montgomery County
My commission expires March 28, 2029
Commission number 1126044
Member, Pennsylvania Association of Notaries

By: _____
Teresa Pastella, Notary Public

This Power of Attorney is made and executed pursuant to and by authority of the following By-laws and Authorizations of The Ohio Casualty Insurance Company, Liberty Mutual Insurance Company, and West American Insurance Company which resolutions are now in full force and effect reading as follows:

ARTICLE IV – OFFICERS: Section 12. Power of Attorney.
Any officer or other official of the Corporation authorized for that purpose in writing by the Chairman or the President, and subject to such limitation as the Chairman or the President may prescribe, shall appoint such attorneys-in-fact, as may be necessary to act in behalf of the Corporation to make, execute, seal, acknowledge and deliver as surety any and all undertakings, bonds, recognizances and other surety obligations. Such attorneys-in-fact, subject to the limitations set forth in their respective powers of attorney, shall have full power to bind the Corporation by their signature and execution of any such instruments and to attach thereto the seal of the Corporation. When so executed, such instruments shall be as binding as if signed by the President and attested to by the Secretary. Any power or authority granted to any representative or attorney-in-fact under the provisions of this article may be revoked at any time by the Board, the Chairman, the President or by the officer or officers granting such power or authority.

ARTICLE XIII – Execution of Contracts: Section 5. Surety Bonds and Undertakings.
Any officer of the Company authorized for that purpose in writing by the chairman or the president, and subject to such limitations as the chairman or the president may prescribe, shall appoint such attorneys-in-fact, as may be necessary to act in behalf of the Company to make, execute, seal, acknowledge and deliver as surety any and all undertakings, bonds, recognizances and other surety obligations. Such attorneys-in-fact subject to the limitations set forth in their respective powers of attorney, shall have full power to bind the Company by their signature and execution of any such instruments and to attach thereto the seal of the Company. When so executed such instruments shall be as binding as if signed by the president and attested by the secretary.

Certificate of Designation – The President of the Company, acting pursuant to the Bylaws of the Company, authorizes Nathan J. Zangerle, Assistant Secretary to appoint such attorneys-in-fact as may be necessary to act on behalf of the Company to make, execute, seal, acknowledge and deliver as surety any and all undertakings, bonds, recognizances and other surety obligations.

Authorization – By unanimous consent of the Company's Board of Directors, the Company consents that facsimile or mechanically reproduced signature of any assistant secretary of the Company, wherever appearing upon a certified copy of any power of attorney issued by the Company in connection with surety bonds, shall be valid and binding upon the Company with the same force and effect as though manually affixed.

I, Renee C. Llewellyn, the undersigned, Assistant Secretary, The Ohio Casualty Insurance Company, Liberty Mutual Insurance Company, and West American Insurance Company do hereby certify that the original power of attorney of which the foregoing is a full, true and correct copy of the Power of Attorney executed by said Companies, is in full force and effect and has not been revoked.

IN TESTIMONY WHEREOF, I have hereunto set my hand and affixed the seals of said Companies this 8th day of April, 2026.

By: _____
Renee C. Llewellyn, Assistant Secretary

LMS-12873 LMIC OCIC WAIC Multi Co 02/24

Not valid for mortgage, note, loan, letter of credit, currency rate, interest rate or residual value guarantees.

For bond and/or Power of Attorney (POA) verification inquiries, please call 610-832-8240 or email HOSUR@libertymutual.com.

GUY HURLEY
INSURANCE & SURETY SERVICES

March 31, 2026

TO City of St. Pete Beach

RE: Principal: Ajax Paving Industries of Florida LLC
Project: Civil On Call Construction Services 2026

To Whom It May Concern:

The purpose of this letter is to advise you of the surety bond capacity and reputation of Ajax Paving Industries of Florida LLC. We have had the continuing privilege of providing surety bonds for this company for more than 30 years.

We write bonds for Ajax Paving Industries of Florida LLC through Liberty Mutual Insurance Company and extend to them a surety line in excess of $200,000,000 per single project and $750,000,000 in aggregate. Liberty Mutual Insurance Company is licensed to do business in all states and has an A.M. Best Rating of "A" with a financial size of Class "XV". Liberty Mutual Insurance Company's Treasury Listing is $2,248,066,000.

Ajax Paving Industries of Florida LLC is a professionally managed organization with an excellent reputation. They have an experienced organization and are well financed. We recommend Ajax Paving Industries of Florida LLC to you without reservation.

Upon the request of Ajax Paving Industries of Florida LLC, we will be pleased to execute Performance and Payment Bonds. This letter is not an assumption of liability, nor is it a bid or performance bond. The surety reserves the right to review the file and contract terms and conditions for acceptance prior to the authorization or execution of any performance and payment bonds.

Sincerely,

LIBERTY MUTUAL INSURANCE COMPANY

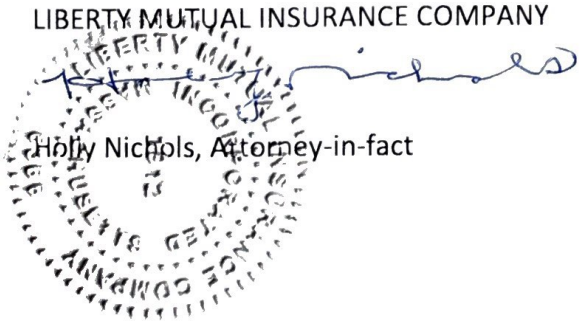

Holly Nichols, Attorney-in-fact

DIRECT 248.519.1400 | FAX 248.519.1401 | 989 E. South Boulevard, Suite 200 | Rochester Hills, MI 48307

POWER OF ATTORNEY

Liberty Mutual Insurance Company
The Ohio Casualty Insurance Company
West American Insurance Company

Certificate No: **8213450-013068**

KNOWN ALL PERSONS BY THESE PRESENTS: That The Ohio Casualty Insurance Company is a corporation duly organized under the laws of the State of New Hampshire, that Liberty Mutual Insurance Company is a corporation duly organized under the laws of the State of Massachusetts, and West American Insurance Company is a corporation duly organized under the laws of the State of Indiana (herein collectively called the "Companies"), pursuant to and by authority herein set forth, does hereby name, constitute and appoint, Nicholas Ashburn; Robert D. Heuer; Paul H. Hurley; Michael D. Lechner; Mark Madden; Richard McGregor; Holly Nichols; Jason Rogers

all of the city of Rochester state of MI each individually if there be more than one named, its true and lawful attorney-in-fact to make, execute, seal, acknowledge and deliver, for and on its behalf as surety and as its act and deed, any and all undertakings, bonds, recognizances and other surety obligations, in pursuance of these presents and shall be as binding upon the Companies as if they have been duly signed by the president and attested by the secretary of the Companies in their own proper persons.

IN WITNESS WHEREOF, this Power of Attorney has been subscribed by an authorized officer or official of the Companies and the corporate seals of the Companies have been affixed thereto this 25th day of March, 2025.

Liberty Mutual Insurance Company
The Ohio Casualty Insurance Company
West American Insurance Company

By: _____
Nathan J. Zangerle, Assistant Secretary

State of PENNSYLVANIA
County of MONTGOMERY ss

On this 25th day of March, 2025 before me personally appeared Nathan J. Zangerle, who acknowledged himself to be the Assistant Secretary of Liberty Mutual Insurance Company, The Ohio Casualty Company, and West American Insurance Company, and that he, as such, being authorized so to do, execute the foregoing instrument for the purposes therein contained by signing on behalf of the corporations by himself as a duly authorized officer.

IN WITNESS WHEREOF, I have hereunto subscribed my name and affixed my notarial seal at Plymouth Meeting, Pennsylvania, on the day and year first above written.

Commonwealth of Pennsylvania - Notary Seal
Teresa Pastella, Notary Public
Montgomery County
My commission expires March 28, 2029
Commission number 1126044
Member, Pennsylvania Association of Notaries

By: _____
Teresa Pastella, Notary Public

This Power of Attorney is made and executed pursuant to and by authority of the following By-laws and Authorizations of The Ohio Casualty Insurance Company, Liberty Mutual Insurance Company, and West American Insurance Company which resolutions are now in full force and effect reading as follows:

ARTICLE IV – OFFICERS: Section 12. Power of Attorney.
Any officer or other official of the Corporation authorized for that purpose in writing by the Chairman or the President, and subject to such limitation as the Chairman or the President may prescribe, shall appoint such attorneys-in-fact, as may be necessary to act in behalf of the Corporation to make, execute, seal, acknowledge and deliver as surety any and all undertakings, bonds, recognizances and other surety obligations. Such attorneys-in-fact, subject to the limitations set forth in their respective powers of attorney, shall have full power to bind the Corporation by their signature and execution of any such instruments and to attach thereto the seal of the Corporation. When so executed, such instruments shall be as binding as if signed by the President and attested to by the Secretary. Any power or authority granted to any representative or attorney-in-fact under the provisions of this article may be revoked at any time by the Board, the Chairman, the President or by the officer or officers granting such power or authority.

ARTICLE XIII – Execution of Contracts: Section 5. Surety Bonds and Undertakings.
Any officer of the Company authorized for that purpose in writing by the chairman or the president, and subject to such limitations as the chairman or the president may prescribe, shall appoint such attorneys-in-fact, as may be necessary to act in behalf of the Company to make, execute, seal, acknowledge and deliver as surety any and all undertakings, bonds, recognizances and other surety obligations. Such attorneys-in-fact subject to the limitations set forth in their respective powers of attorney, shall have full power to bind the Company by their signature and execution of any such instruments and to attach thereto the seal of the Company. When so executed such instruments shall be as binding as if signed by the president and attested by the secretary.

Certificate of Designation – The President of the Company, acting pursuant to the Bylaws of the Company, authorizes Nathan J. Zangerle, Assistant Secretary to appoint such attorneys-in-fact as may be necessary to act on behalf of the Company to make, execute, seal, acknowledge and deliver as surety any and all undertakings, bonds, recognizances and other surety obligations.

Authorization – By unanimous consent of the Company's Board of Directors, the Company consents that facsimile or mechanically reproduced signature of any assistant secretary of the Company, wherever appearing upon a certified copy of any power of attorney issued by the Company in connection with surety bonds, shall be valid and binding upon the Company with the same force and effect as though manually affixed.

I, Renee C. Llewellyn, the undersigned, Assistant Secretary, The Ohio Casualty Insurance Company, Liberty Mutual Insurance Company, and West American Insurance Company do hereby certify that the original power of attorney of which the foregoing is a full, true and correct copy of the Power of Attorney executed by said Companies, is in full force and effect and has not been revoked.

IN TESTIMONY WHEREOF, I have hereunto set my hand and affixed the seals of said Companies this 31st day of March, 2026.

By: _____
Renee C. Llewellyn, Assistant Secretary

LMS-12873 LMIC OCIC WAIC Multi Co 02/24

Not valid for mortgage, note, loan, letter of credit, currency rate, interest rate or residual value guarantees.

For bond and/or Power of Attorney (POA) verification inquiries, please call 610-832-8240 or email HOSUR@libertymutual.com.

Ron DeSantis, Governor

Melanie S. Griffin, Secretary

Florida dbpr

STATE OF FLORIDA
DEPARTMENT OF BUSINESS AND PROFESSIONAL REGULATION

CONSTRUCTION INDUSTRY LICENSING BOARD

THE GENERAL CONTRACTOR HEREIN IS CERTIFIED UNDER THE
PROVISIONS OF CHAPTER 489, FLORIDA STATUTES

HORAN, MICHAEL ALAN

AJAX PAVING INDUSTRIES OF FLORIDA LLC
ONE AJAX DRIVE
NORTH VENICE FL 34275

LICENSE NUMBER: CGC1516738

EXPIRATION DATE: AUGUST 31, 2026

Always verify licenses online at MyFloridaLicense.com

ISSUED: 06/05/2024

Do not alter this document in any form.

This is your license. It is unlawful for anyone other than the licensee to use this document.

Ron DeSantis, Governor

Melanie S. Griffin, Secretary

Florida dbpr

STATE OF FLORIDA
DEPARTMENT OF BUSINESS AND PROFESSIONAL REGULATION

CONSTRUCTION INDUSTRY LICENSING BOARD

THE UNDERGROUND UTILITY & EXCAVATION CO HEREIN IS CERTIFIED UNDER THE PROVISIONS OF CHAPTER 489, FLORIDA STATUTES

HORAN, MICHAEL ALAN

AJAX PAVING INDUSTRIES OF FLORIDA LLC
ONE AJAX DRIVE
NORTH VENICE FL 34275

LICENSE NUMBER: CUC1224679

EXPIRATION DATE: AUGUST 31, 2026

Always verify licenses online at MyFloridaLicense.com

ISSUED: 06/05/2024

Do not alter this document in any form.

This is your license. It is unlawful for anyone other than the licensee to use this document.

Form **W-9**
(Rev. March 2024)
Department of the Treasury
Internal Revenue Service

Request for Taxpayer Identification Number and Certification

Go to *www.irs.gov/FormW9* for instructions and the latest information.

Give form to the requester. Do not send to the IRS.

Before you begin. For guidance related to the purpose of Form W-9, see *Purpose of Form*, below.

Print or type. See *Specific Instructions* on page 3.

1 Name of entity/individual. An entry is required. (For a sole proprietor or disregarded entity, enter the owner's name on line 1, and enter the business/disregarded entity's name on line 2.)

Ajax Paving Industries of FL, LLC

2 Business name/disregarded entity name, if different from above.

3a Check the appropriate box for federal tax classification of the entity/individual whose name is entered on line 1. Check only **one** of the following seven boxes.

☐ Individual/sole proprietor ☐ C corporation ☐ S corporation ☐ Partnership ☐ Trust/estate

☑ LLC. Enter the tax classification (C = C corporation, S = S corporation, P = Partnership) . . . . P

Note: Check the "LLC" box above and, in the entry space, enter the appropriate code (C, S, or P) for the tax classification of the LLC, unless it is a disregarded entity. A disregarded entity should instead check the appropriate box for the tax classification of its owner.

☐ Other (see instructions)

4 Exemptions (codes apply only to certain entities, not individuals; see instructions on page 3):

Exempt payee code (if any)

Exemption from Foreign Account Tax Compliance Act (FATCA) reporting code (if any)

(Applies to accounts maintained outside the United States.)

3b If on line 3a you checked "Partnership" or "Trust/estate," or checked "LLC" and entered "P" as its tax classification, and you are providing this form to a partnership, trust, or estate in which you have an ownership interest, check this box if you have any foreign partners, owners, or beneficiaries. See instructions . . . . . ☐

5 Address (number, street, and apt. or suite no.). See instructions.

One Ajax Drive

6 City, state, and ZIP code

North Venice, FL 34275

Requester's name and address (optional)

7 List account number(s) here (optional)

Part I Taxpayer Identification Number (TIN)

Enter your TIN in the appropriate box. The TIN provided must match the name given on line 1 to avoid backup withholding. For individuals, this is generally your social security number (SSN). However, for a resident alien, sole proprietor, or disregarded entity, see the instructions for Part I, later. For other entities, it is your employer identification number (EIN). If you do not have a number, see *How to get a TIN*, later.

Note: If the account is in more than one name, see the instructions for line 1. See also *What Name and Number To Give the Requester* for guidelines on whose number to enter.

Social security number

			–			–				

or

Employer identification number

2	6	–	1	8	7	1	9	6	6

Part II Certification

Under penalties of perjury, I certify that:

1. The number shown on this form is my correct taxpayer identification number (or I am waiting for a number to be issued to me); and
2. I am not subject to backup withholding because (a) I am exempt from backup withholding, or (b) I have not been notified by the Internal Revenue Service (IRS) that I am subject to backup withholding as a result of a failure to report all interest or dividends, or (c) the IRS has notified me that I am no longer subject to backup withholding; and
3. I am a U.S. citizen or other U.S. person (defined below); and
4. The FATCA code(s) entered on this form (if any) indicating that I am exempt from FATCA reporting is correct.

Certification instructions. You must cross out item 2 above if you have been notified by the IRS that you are currently subject to backup withholding because you have failed to report all interest and dividends on your tax return. For real estate transactions, item 2 does not apply. For mortgage interest paid, acquisition or abandonment of secured property, cancellation of debt, contributions to an individual retirement arrangement (IRA), and, generally, payments other than interest and dividends, you are not required to sign the certification, but you must provide your correct TIN. See the instructions for Part II, later.

Sign Here | **Signature of U.S. person** [signature] **Date** 1/13/26

General Instructions

Section references are to the Internal Revenue Code unless otherwise noted.

Future developments. For the latest information about developments related to Form W-9 and its instructions, such as legislation enacted after they were published, go to *www.irs.gov/FormW9*.

What's New

Line 3a has been modified to clarify how a disregarded entity completes this line. An LLC that is a disregarded entity should check the appropriate box for the tax classification of its owner. Otherwise, it should check the "LLC" box and enter its appropriate tax classification.

New line 3b has been added to this form. A flow-through entity is required to complete this line to indicate that it has direct or indirect foreign partners, owners, or beneficiaries when it provides the Form W-9 to another flow-through entity in which it has an ownership interest. This change is intended to provide a flow-through entity with information regarding the status of its indirect foreign partners, owners, or beneficiaries, so that it can satisfy any applicable reporting requirements. For example, a partnership that has any indirect foreign partners may be required to complete Schedules K-2 and K-3. See the Partnership Instructions for Schedules K-2 and K-3 (Form 1065).

Purpose of Form

An individual or entity (Form W-9 requester) who is required to file an information return with the IRS is giving you this form because they

Florida Department of Transportation

RON DESANTIS
GOVERNOR

605 Suwannee Street
Tallahassee, FL 32399-0450

JARED W. PERDUE, P.E.
SECRETARY

April 21,2025

AJAX PAVING INDUSTRIES OF FLORIDA LLC
ONE AJAX DRIVE
NORTH VENICE, FLORIDA 34275-3624

REVISED
RE: CERTIFICATE OF QUALIFICATION

The Department of Transportation has qualified your company for the type of work indicated below.

FDOT APPROVED WORK CLASSES:
DEBRIS REMOVAL (EMERGENCY), DRAINAGE, ELECTRICAL WORK, FENCING, FLEXIBLE PAVING, GRADING, GRASSING, SEEDING AND SODDING, GUARDRAIL, HOT PLANT-MIXED BITUM. COURSES, INTERMEDIATE BRIDGES, MINOR BRIDGES, PORTLAND CEMENT CONCRETE ROADWAY PAVING, ROADWAY SIGNING, SIDEWALK, TRAFFIC SIGNAL, MILLING, UNDERGROUND UTILITIES (WATER & SEWER).

Unless notified otherwise, this Certificate of Qualification will expire **6/30/2026.**

In accordance with Section 337.14(1), Florida Statutes, an application for qualification must be filed within (4) months of the ending date of the applicant's audited annual financial statements.

If the company's maximum capacity has been revised, it may be accessed by logging into the Contractor Prequalification Application System via the following link:
HTTPS://fdotwp1.dot.state.fl.us/ContractorPreQualification

Once logged in, select "View" for the most recently approved application, and then click the "Manage" and "Application Summary" tabs.

The company may apply for a Revised Certificate of Qualification at any time prior to the expiration date of this certificate according to Section 14-22.0041(3), Florida Administrative Code (F.A.C.), by accessing the most recently approved application as shown above and choosing "Update" instead of "View." If certification in additional classes of work is desired, documentation is needed to show that the company has performed such work.

All prequalified contractors are required by Section 14-22.006(3), F.A.C., to certify their work underway monthly in order to adjust maximum bidding capacity to available bidding capacity. You can find the link to this report at the website shown above.

Sincerely,

James E. Taylor II

James E. Taylor II, Prequalification Supervisor
Contracts Administration Office

JTII

CORPORATE SUBSTANCE ABUSE PROGRAM

STATEMENT OF POLICY

This Company has legal responsibility to comply with the United States Department of Transportation's (US DOT) regulations regarding the testing of Company employees. To accomplish that end, the Company cannot condone and will not tolerate any of the following behaviors by its employees:

A. Use of illicit drugs.
B. Abuse of legal drugs (prescription or over-the-counter).
C. Abuse of alcohol
D. Sale, purchase, transfer or use or possession of illegal drugs or prescription drugs obtained illegally.
E. Arrival for work under the influence of drugs or alcohol.

Should any of these above-mentioned behaviors be detected, the Company will terminate the employee.

The testing of an employee's urine for drugs is an effective mean to identify those in need of treatment or disciplinary action. However, the urine testing program is intended to supplement, not replace, other means of drugs or alcohol detection

Michael A. Horan

Chief Executive Officer



CERTIFICATE OF LIABILITY INSURANCE

DATE (MM/DD/YYYY): 5/28/2025

THIS CERTIFICATE IS ISSUED AS A MATTER OF INFORMATION ONLY AND CONFERS NO RIGHTS UPON THE CERTIFICATE HOLDER. THIS CERTIFICATE DOES NOT AFFIRMATIVELY OR NEGATIVELY AMEND, EXTEND OR ALTER THE COVERAGE AFFORDED BY THE POLICIES BELOW. THIS CERTIFICATE OF INSURANCE DOES NOT CONSTITUTE A CONTRACT BETWEEN THE ISSUING INSURER(S), AUTHORIZED REPRESENTATIVE OR PRODUCER, AND THE CERTIFICATE HOLDER.

IMPORTANT: If the certificate holder is an ADDITIONAL INSURED, the policy(ies) must be endorsed. If SUBROGATION IS WAIVED, subject to the terms and conditions of the policy, certain policies may require an endorsement. A statement on this certificate does not confer rights to the certificate holder in lieu of such endorsement(s).

PRODUCER
Guy Hurley, LLC
989 E. South Boulevard
Suite 200
Rochester Hills MI 48307

CONTACT NAME: Alan Nava
PHONE (A/C, No, Ext): (248)519-1306 FAX (A/C, No): (248)519-1401
E-MAIL ADDRESS: anava@ghbh.com

INSURER(S) AFFORDING COVERAGE		NAIC #
INSURER A : American Contractors Insurance Co	A	12300
INSURER B : ACIG Insurance Company	A	19984
INSURER C : Continental Insurance Company	A	35289
INSURER D : Travelers Excess+Surplus Lines Co.	A++XV	29696
INSURER E : Indian Harbor Insurance Company	A+ XV	36940
INSURER F :		

INSURED
Ajax Paving Industries of Florida, LLC
One Ajax Drive
North Venice FL 34275

COVERAGES **CERTIFICATE NUMBER:** 25-26 Kara w/ Pollution **REVISION NUMBER:**

THIS IS TO CERTIFY THAT THE POLICIES OF INSURANCE LISTED BELOW HAVE BEEN ISSUED TO THE INSURED NAMED ABOVE FOR THE POLICY PERIOD INDICATED. NOTWITHSTANDING ANY REQUIREMENT, TERM OR CONDITION OF ANY CONTRACT OR OTHER DOCUMENT WITH RESPECT TO WHICH THIS CERTIFICATE MAY BE ISSUED OR MAY PERTAIN, THE INSURANCE AFFORDED BY THE POLICIES DESCRIBED HEREIN IS SUBJECT TO ALL THE TERMS, EXCLUSIONS AND CONDITIONS OF SUCH POLICIES. LIMITS SHOWN MAY HAVE BEEN REDUCED BY PAID CLAIMS.

INSR LTR	TYPE OF INSURANCE	ADDL INSD	SUBR WVD	POLICY NUMBER	POLICY EFF (MM/DD/YYYY)	POLICY EXP (MM/DD/YYYY)	LIMITS		
A	X COMMERCIAL GENERAL LIABILITY			GL25A00094	6/1/2025	6/1/2026	EACH OCCURRENCE	$	10,000,000
A	CLAIMS-MADE X OCCUR			GL25B00094(GL Excess)	6/1/2025	6/1/2026	DAMAGE TO RENTED PREMISES (Ea occurrence)	$	100,000
	X XCU Coverage Included						MED EXP (Any one person)	$	5,000
A	X Contractual Liability			GL25C00094 (GL Excess)	6/1/2025	6/1/2026	PERSONAL & ADV INJURY	$	10,000,000
	GEN'L AGGREGATE LIMIT APPLIES PER:						GENERAL AGGREGATE	$	10,000,000
	POLICY X PRO-JECT LOC						PRODUCTS - COMP/OP AGG	$	10,000,000
	OTHER:							$	
A	AUTOMOBILE LIABILITY						COMBINED SINGLE LIMIT (Ea accident)	$	5,000,000
	X ANY AUTO						BODILY INJURY (Per person)	$	
	ALL OWNED AUTOS / SCHEDULED AUTOS			AL25000039	6/1/2025	6/1/2026	BODILY INJURY (Per accident)	$	
	X HIRED AUTOS / X NON-OWNED AUTOS						PROPERTY DAMAGE (Per accident)	$	
								$	
C	UMBRELLA LIAB X OCCUR						EACH OCCURRENCE	$	10,000,000
C	X EXCESS LIAB / CLAIMS-MADE			CUE7039655619	6/1/2025	6/1/2026	AGGREGATE	$	10,000,000
	DED RETENTION $							$	
B	WORKERS COMPENSATION AND EMPLOYERS' LIABILITY						X PER STATUTE / OTH-ER		
	ANY PROPRIETOR/PARTNER/EXECUTIVE OFFICER/MEMBER EXCLUDED? Y/N: N N/A						E.L. EACH ACCIDENT	$	1,000,000
	(Mandatory in NH)			WCA000030725	6/1/2025	6/1/2026	E.L. DISEASE - EA EMPLOYEE	$	1,000,000
	If yes, describe under DESCRIPTION OF OPERATIONS below						E.L. DISEASE - POLICY LIMIT	$	1,000,000
E	Professional/Pollution Liab			CE07421287	6/1/2025	6/1/2026	Occurrence/Aggregate		$5,000,000
D	Inland Marine			QT 630- 4W330426-TXS-25	6/1/2025	6/1/2026	Leased/Rented		$550,000

DESCRIPTION OF OPERATIONS / LOCATIONS / VEHICLES (ACORD 101, Additional Remarks Schedule, may be attached if more space is required)

CERTIFICATE HOLDER

EVIDENCE OF COVERAGE

CANCELLATION

SHOULD ANY OF THE ABOVE DESCRIBED POLICIES BE CANCELLED BEFORE THE EXPIRATION DATE THEREOF, NOTICE WILL BE DELIVERED IN ACCORDANCE WITH THE POLICY PROVISIONS.

AUTHORIZED REPRESENTATIVE
R McGregor/ALNAVA

© 1988-2014 ACORD CORPORATION. All rights reserved.

AJAX PAVING INDUSTRIES OF FLORIDA, LLC.

CONSTRUCTION EXPERIENCE OF PRINCIPAL SUPERVISORY PERSONNEL

INDIVIDUAL'S NAME	POSITION/OFFICE	TYPE OF WORK	YEARS EXPERIENCE	CAPACITY
Michael A. Horan, P.E.	Chief Executive Officer, Manager	5,6,7,8,9,10	43	Civil Engineer/Manager
Vince Hafeli	President	5,6,7,8,9,10	34	Engineer/Manager
Natalie Woody, P.E.	Secretary/Treasurer	5,6,7,8,9,10	12	Enginner/Secretary/Treasurer
Scott Pittman, P.E.	VP of Operations - North Region	5,6,7,8,9,10	21	Civil Engineer/Manager
Andre DeCraene	VP of Operations - South Region	5,6,7,8,9,10	21	Engineer/Manager
Tom Daquanna	Construction Manager - Tampa	5,6,7,8,9,10	34	Engineer/Manager
Matt Horan	Area Manager - Sarasota	5,6,7,8,9,10	10	Civil Engineer/Project Manager
Matthew Desotell	Area Manager - Fort Myers	5,6,7,8,9,10	8	Civil Engineer/Project Manager
Joe Minich	Area Manager - Tampa	5,6,7,8,9,10	20	Civil Engineer/Estimator
Mike Woody	TPR Coordinator	5,6,7,8,9,10	6	Project Engineer
Mike Curle	Quality Control Manager - Asphalt	5,6,7,8,9,10	23	Quality Control Manager
John Savage	Project Manager	5,6,7,8,9,10	20	Quality Control Manager
Rusty Reynolds	Asphalt Plant Operations Manager	5,6,7,8,9,10	35	Asphalt Plant Operations Manager
Mickey Cox	General Manager - Plants and Materials	5,6,7,8,9,10	28	Asphalt Plant Operations Manager
Jim Price, P.E.	Project Manager	5,6,7,8,9,10	23	Civil Engineer/Project Manager
Dale Purcell	Construction Manager	5,6,7,8,9,10	24	Construction Manager
Jayson Brown, P.E.	Project Manager	5,6,7,8,9,10	12	Civil Engineer/Project Manager
Jason Prokopetz, P.E.	Project Manager	5,6,7,8,9,10	20	Civil Engineer/Project Manager
Mike Morgan, P.E.	Project Manager	5,6,7,8,9,10	34	Civil Engineer/Project Manager
Linda Bailey	EEO Officer	5,6,7,8,9,10	12	EEO Officer
Mandy Kustra	Safety Director	5,6,7,8,9,10	19	Safety Director
Eric Green	Safety Manager	5,6,7,8,9,10	14	Safety Manager
Bob Kern	Safety Manager	5,6,7,8,9,10	2	Safety Manager
Steve Ayers	Design Build Project Director	5,6,7,8,9,10	45	Engineer/Manager
Felipe Jaramillo, P.E.	Alternative Contracting Project Manager	5,6,7,8,9,10	17	Civil Engineer/Project Manager
Jerry Hunt	Construction Manager	5,6,7,8,9,10	42	Construction Manager
Garrett Fons	Construction Manager	5,6,7,8,9,10	21	Construction Manager
Roger Owens	Project Manager	5,6,7,8,9,10	35	Project Engineer
Nathan Hassler, P.E.	Project Manager	5,6,7,8,9,10	11	Project Engineer
Clayton Cross	Project Manager	5,6,7,8,9,10	18	Project Engineer
Chris Stewart	Project Superintendent	5,6,7,8,9,10	28	Foreman/Superintendent
Wally Cabral	Project Superintendent	5,6,7,8,9,10	40	Foreman/Superintendent
Ralph Bridger	Project Superintendent	5,6,7,8,9,10	43	Foreman/Superintendent
Joseph Dutton	Project Superintendent	5,6,7,8,9,10	29	Foreman/Superintendent
Brian Pittman	Asphalt Paving Superintendent	5,6,7,8,9,10	15	Foreman/Superintendent
Christie Alvaro, P.E.	Senior Estimator	5,6,7,8,9,10	22	Civil Engineer/Senior Estimator
Dave Reid	Senior Estimator	5,6,7,8,9,10	26	Senior Estimator

Type of Work:

5 Grading (Includes Clearing and Grubbing, Excavation and Embankment
6 Drainage (All Storm Drains, Pipe Culverts, Culverts, etc.)
7 Flexible Paving (Includes Limerock, Shell Base and other Optional Base Courses, Soil-Cemented Base, Mixed-in-Place Bituminous Surface Treatments, and Stabilizing)
8 Portland Cement Concrete Paving
9 Hot Plant-Mixed Bituminous Structural and Surface Courses
10 Milling

Ajax Paving Industries of Florida, LLC

An Equal Opportunity Employer

One Ajax Drive • North Venice, FL 34275
Main: 941.486.3600 • Fax: 941.486.3500

July 24, 2023

RESOLUTION OF THE BOARD OF DIRECTORS OF

AJAX PAVING INDUSTRIES OF FLORIDA, LLC

Resolved, that the following individuals are authorized to enter into contracts and sign bonds with all governmental agencies, municipalities, private developers, and contractors for work performed on behalf of **AJAX Paving Industries of Florida, LLC**. In addition, resolved, that the following individuals have written authorization to acknowledge receipt of payment by signature on an appropriate Partial, Conditional or Final Waiver, process the filling of a Claim of Lien, Notice of Non-Payment or Satisfaction of Lien according to the Mechanics Lien Law, or process the recovery of outstanding monies due, through the means of Small Claims Court on behalf of **AJAX Paving Industries of Florida, LLC**, authorized to transact business in the State of Florida in the following manner:

Michael A. Horan
Chief Executive Officer/Manager

Mickey Cox
Vice President of Plants and Materials

Natalie Woody
Secretary/Treasurer

Vince Hafeli
President

Matthew Horan
Regional Vice President, North Venice

Dave Reid
Senior Estimator

Scott Pittman
Executive Vice President-Marketing and Government Affairs

Matt Desotell
Regional Vice President, Ft. Myers

Lauren Taylor
Estimator

Andre DeCraene
Executive Vice President - Operations

Joseph Minich
Regional Vice President, Tampa

Lee Strauss
Estimator

Christie Alvaro
Vice President of Estimating

Clay Cross
Regional Vice President, Lake Wales

Mark Miller
Estimator

Ryan Pulmer
Chief Financial Director

Felipe Jaramillo
Engineer Director

Sharon Radford
Estimator

John Savage
Director of Quality Control

Jericha Gervais
Receivables Manager/Release Forms

E-Verify
Employment Eligibility Verification

Welcome Ingrid Delaney | User ID | Last Login 01:31 PM - 01/11/2016 | Log Out

Click any ? for help

Home
My Cases
New Case
View Cases
Search Cases
My Profile
Edit Profile
Change Password
Change Security Questions
My Company
Edit Company Profile
Add New User
View Existing Users
Close Company Account
My Reports
View Reports
My Resources
View Essential Resources
Take Tutorial
View User Manual
Share Ideas
Contact Us

Company Information

Company Name:	Ajax Paving Industries of Florida, LLC
Company ID Number:	390402
Doing Business As (DBA) Name:	
DUNS Number:	032436479

View / Edit

Physical Location:

Address 1:	One Ajax Drive
Address 2:	
City:	North Venice
State:	FL
Zip Code:	34275
County:	SARASOTA

Mailing Address:

Address 1:	
Address 2:	
City:	
State:	
Zip Code:	

Additional Information:

Employer Identification Number:	261871966
Total Number of Employees:	100 to 499
Parent Organization:	
Administrator:	

Organization Designation:

Employer Category:	None of these categories apply

NAICS Code:	237 - HEAVY AND CIVIL ENGINEERING CONSTRUCTION	View / Edit
Total Hiring Sites:	2	View / Edit
Total Points of Contact:	2	View / Edit

[redacted]

State of Florida
Department of State

I certify from the records of this office that AJAX PAVING INDUSTRIES OF FLORIDA LLC is a limited liability company organized under the laws of the State of Florida, filed on January 30, 2008, effective July 16, 1981.

The document number of this limited liability company is L08000010565.

I further certify that said limited liability company has paid all fees due this office through December 31, 2025, that its most recent annual report was filed on May 1, 2025, and that its status is active.

Given under my hand and the Great Seal of the State of Florida at Tallahassee, the Capital, this the Fourteenth day of January, 2026

Secretary of State

Tracking Number: 0053683521CU

To authenticate this certificate,visit the following site,enter this number, and then follow the instructions displayed.

https://services.sunbiz.org/Filings/CertificateOfStatus/CertificateAuthentication

Department of State / Division of Corporations / Search Records / Search by FEI/EIN Number /

Detail by FEI/EIN Number

Florida Limited Liability Company
AJAX PAVING INDUSTRIES OF FLORIDA LLC

Filing Information

Document Number	L08000010565
FEI/EIN Number	26-1871966
Date Filed	01/30/2008
Effective Date	07/16/1981
State	FL
Status	ACTIVE
Last Event	LC STMNT OF RA/RO CHG
Event Date Filed	06/19/2018
Event Effective Date	NONE

Principal Address

ONE AJAX DRIVE
NORTH VENICE, FL 34275

Changed: 01/24/2019

Mailing Address

ONE AJAX DRIVE
NORTH VENICE, FL 34275

Changed: 08/06/2015

Registered Agent Name & Address

HACKETT II, JACK O.
FARR LAW FIRM
99 NESBIT STREET
PUNTA GORDA, FL 33950

Name Changed: 01/24/2021

Address Changed: 01/24/2021

Authorized Person(s) Detail

Name & Address

Title MANAGER

JACOB, JAMES A

ONE AJAX DRIVE
NORTH VENICE, FL 34275

Title MANAGER/CEO

HORAN, MICHAEL A
ONE AJAX DRIVE
NORTH VENICE, FL 34275

Title PRESIDENT

HAFELI, VINCE
ONE AJAX DRIVE
NORTH VENICE, FL 34275

Title DIRECTOR OF FINANCE

FULMER, RYAN
ONE AJAX DRIVE
NORTH VENICE, FL 34275

Title VICE PRESIDENT

PITTMAN, SCOTT
ONE AJAX DRIVE
NORTH VENICE, FL 34275

Title FLEET MANAGER

MAITLAND, DAN
ONE AJAX DRIVE
NORTH VENICE, FL 34275

Annual Reports

Report Year	Filed Date
2020	04/29/2020
2020	05/06/2020
2021	01/24/2021

Document Images

01/24/2021 -- ANNUAL REPORT	View image in PDF format
05/06/2020 -- AMENDED ANNUAL REPORT	View image in PDF format
04/29/2020 -- ANNUAL REPORT	View image in PDF format
12/12/2019 -- AMENDED ANNUAL REPORT	View image in PDF format
09/30/2019 -- AMENDED ANNUAL REPORT	View image in PDF format
01/24/2019 -- ANNUAL REPORT	View image in PDF format
06/19/2018 -- CORLCRACHG	View image in PDF format
01/18/2018 -- ANNUAL REPORT	View image in PDF format
01/19/2017 -- ANNUAL REPORT	View image in PDF format
02/01/2016 -- ANNUAL REPORT	View image in PDF format
08/06/2015 -- AMENDED ANNUAL REPORT	View image in PDF format

04/08/2015 -- ANNUAL REPORT	View image in PDF format
12/29/2014 -- Merger	View image in PDF format
01/10/2014 -- ANNUAL REPORT	View image in PDF format
01/25/2013 -- ANNUAL REPORT	View image in PDF format
01/16/2012 -- ANNUAL REPORT	View image in PDF format
01/04/2011 -- ANNUAL REPORT	View image in PDF format
01/07/2010 -- ANNUAL REPORT	View image in PDF format
01/22/2009 -- ANNUAL REPORT	View image in PDF format
01/30/2008 -- Florida Limited Liability	View image in PDF format

Entity Information

AJAX PAVING INDUSTRIES OF FLORIDA LLC

● Active Registration

Unique Entity ID
XHFAM55Z66J5

CAGE/NCAGE
1E7E3

Expiration Date
Nov 25, 2026

Physical Address

1 Ajax DR
North Venice, Florida
34275-3505, United States

Mailing Address

1 Ajax DR
North Venice, Florida
34275-3505, United States

Purpose of Registration

All Awards

CITY OF VENICE
401 W. Venice Ave.
Venice, FL 34285

LOCAL BUSINESS TAX RECEIPT

BUSINESS NAME: AJAX PAVING INDUSTRIES OF FLOR

BUSINESS LOCATION: 1 AJAX DR

BUSINESS OWNER:

LOCAL BUSINESS TAX RECEIPT
NUMBER: 21180
EXPIRES: September 30, 2026

AJAX PAVING INDUSTRIES OF FLOR
510 GENE GREEN RD
NOKOMIS, FL 34275

BUSINESS CLASS: MANUFACTURING

CITY OF VENICE, SARASOTA COUNTY, FLORIDA
INCORPORATED
1926
CORPORATE
SEAL

CITY CLERK

-

TO BE POSTED IN A CONSPICUOUS PLACE

Ajax Paving Industries of Florida, LLC

OFFICES

NORTH VENICE OFFICE
One Ajax Drive
North Venice, FL 34275
941.486.3600
941.486.3500 Fax

FORT MYERS OFFICE
13350 Rickenbacker Pkwy
Fort Myers, FL 33913
239.936.9444
239.936.9445 Fax

TEMPLE TERRACE OFFICE
7860 Professional Place
Temple Terrace, FL 33637
813.769.1990
813.769.1991 Fax

LAKE WALES OFFICE
24174 Highway 27, Unit #300
Lake Wales, FL 33859
863.978.4011

ASPHALT PLANTS & AJAX MATERIALS

NORTH VENICE PLANT 1
One Ajax Dr
North Venice, FL 34275
941.486.3420 Tower
941.486.8771 Fax

PUNTA GORDA PLANT 2
40851 Cook Brown Road
Punta Gorda, FL 33982
239.543.4544 Tower
239.543.1105 Fax

PORT MANATEE PLANT 3
12165 U.S. 41 North
Palmetto, FL 34221
941.845.1138 Tower
941.721.3155 Fax

FORT MYERS PLANT 4
7121 Pennsylvania Street
Fort Myers, FL 33912
239.489.3320 Tower
239.489.9973 Fax

ODESSA PLANT 5
11603 S.R. 54
Odessa, FL 33556
727.375.5780 Tower
727.375.5750

TAMPA PLANT 6
6050 Jensen Road
Tampa, FL 33619
813.574.8331 Tower
813.574.8334 Fax

LARGO PLANT 7
1550 Starkey Road
Largo, FL 33771
727.499.2168 Tower
727.499.2169 Fax

LAKE WALES PLANT 8
1800 Old Bartow Road
Lake Wales, FL 33859

AJAX MATERIALS
500 Gene Green Road
Nokomis, FL 34275
941.485.5301 Office
941.485.5264 Fax

www.ajaxpaving.com


Ajax Plant 5 - Odessa
11603 S.R. 54
Ajax Plant 7 - Largo
1550 Starkey Road
Ajax Plant 6 - Tampa
6050 Jensen Road
Ajax Plant 8 - Lake Wales
1800 Old Bartow Road
Ajax Plant 3 - Port Manatee
12165 U.S. 41 North
Ajax Plant 1 - North Venice
One Ajax Drive
Ajax Plant 2 - Punta Gorda
40851 Cook Brown Road
Ajax Plant 4 - Fort Myers
7121 Pennsylvania Street
AJAX
Brookridge
Brooksville
Groveland
Clermont
Pine Hills
Orlando
Timber Pines
Hernando Beach
Spring Hill
Shady Hills
Ridge Manor
Lacoochee
Dade City North
Dade City
Green Swamp
Conway
Oak Ridge
Williamsburg
Meadow Woods
Kissimmee
Bayonet Point
Zephyrhills
Upper Hillsborough
Holiday
Tarpon Springs
Greater Northdale
Lutz
Lake Magdalene
Davenport
Lake Alfred
Haines City
Palm Harbor
Town 'n' Country
Temple Terrace
Auburndale
Winter Haven
Dunedin
Clearwater
Tampa
Brandon
Lakeland Highlands
Cypress Gardens
Indian Rocks Beach
Largo
Pinellas Park
Riverview
Mulberry
Bartow
Lake Wales
Boyette
Crooked Lake Park
Lake Wales Ridge State Forest
Treasure Island
St Petersburg
Fort Meade
Frostproof
Ruskin
St Pete Beach
Bowling Green
Avon Park
Wauchula
Holmes Beach
Palmetto
Memphis
Sebring
Cortez
Bradenton
Zolfo Springs
Longboat Key
Bayshore Gardens
De Soto City
The Meadows
Sylvan Shores
Sarasota
Sarasota Springs
Gulf Gate Estates
Lake Placid
Placid Lakes
Arcadia
Osprey
Southeast Arcadia
Laurel
Venice
Venice Gardens
North Port
South Venice
Harbour Heights
Port Charlotte
Englewood
Cleveland
Grove City
Punta Gorda
Rotonda
Charlotte Harbor
LaBelle
Bokeelia
North Fort Myers
Fort Myers Shores
Fort Myers
Matlacha
Pine Island Sound
Cape Coral
Captiva
Sanibel
Fort Myers Beach
Estero
Okaloacoochee Slough State Forest
Ajax Paving Industries of Florida, LLC
One Ajax Drive, North Venice, FL 34275
Ph (941) 486-3600 • Fax (941) 486-3500

EXHIBIT "D"

Conditional Federal/Grant-Funded Contract Addendum

(Place Conditional Federal/Grant-Funded Contract Addendum behind this page)

EXHIBIT "D"
CONDITIONAL FEDERAL/GRANT-FUNDED CONTRACT ADDENDUM

1. Applicability

1.1 This Exhibit applies only if activated under Section 25 of the Agreement or under a Task Order. If not activated, this Exhibit is reserved and has no operative effect.
1.2 If activated, this Exhibit supplements the Agreement and applies to the federally funded or grant-funded Work only. Contractor shall comply with all applicable requirements of the federal award, grant agreement, pass-through entity, program rules, and applicable law.
1.3 The City may provide additional award-specific clauses, certifications, forms, wage determinations, reporting requirements, or flow-down provisions. Contractor shall comply with such requirements as a condition of performing the affected Work and receiving payment from the applicable funding source.

2. Federal Award and Grant Information

Federal/Grant Program: [insert]
Federal Awarding Agency: [insert]
Pass-Through Entity: [insert, if applicable]
Assistance Listing Number: [insert, if applicable]
Federal Award Identification Number: [insert, if applicable]
Award or Disaster Declaration Date: [insert, if applicable]
Project Number: [insert]
Special Award Conditions: [insert or attach]

3. Remedies for Breach

For contracts exceeding the simplified acquisition threshold, Contractor acknowledges that the City may exercise all administrative, contractual, legal, and equitable remedies available under the Contract Documents and applicable law if Contractor violates or breaches contract terms. Remedies may include withholding payment, requiring correction, suspension of Work, termination, procurement from alternate sources, damages, sanctions, and any other appropriate remedy.

4. Termination for Cause and Convenience

For contracts in excess of $10,000, the City may terminate the federally funded or grant-funded Work for cause or convenience as provided in the Agreement. The notice of termination will identify the effective date and the manner of termination. Contractor shall be paid only for authorized Work satisfactorily performed before the effective date of termination, subject to documentation, offsets, allowable cost requirements, and applicable grant rules.

5. Equal Employment Opportunity

Except as otherwise provided under 41 C.F.R. Part 60, if the Work is a federally assisted construction contract as defined in 41 C.F.R. § 60-1.3, Contractor shall comply with the equal opportunity clause in 41 C.F.R. § 60-1.4(b), which is incorporated by reference as if fully set forth

RESERVED

herein, and shall include the required clause in covered subcontracts and purchase orders.

6. Davis-Bacon Act and Copeland Anti-Kickback Act

When required by federal program legislation, all prime construction contracts in excess of $2,000 must include compliance with the Davis-Bacon Act, 40 U.S.C. §§ 3141-3148, as supplemented by Department of Labor regulations at 29 C.F.R. Part 5. If Davis-Bacon applies, Contractor shall pay laborers and mechanics at rates not less than the applicable wage determination, pay wages not less than once per week, submit certified payrolls if required, and comply with all applicable labor standards.
If Davis-Bacon applies, Contractor shall also comply with the Copeland "Anti-Kickback" Act, 40 U.S.C. § 3145, as supplemented by 29 C.F.R. Part 3, and shall not induce any person employed in the construction, completion, or repair of public work to give up any part of compensation to which the person is entitled. Contractor shall report suspected or reported violations to the City.

7. Contract Work Hours and Safety Standards Act

Where applicable, for contracts in excess of $100,000 that involve the employment of mechanics or laborers, Contractor shall comply with 40 U.S.C. §§ 3702 and 3704, as supplemented by Department of Labor regulations at 29 C.F.R. Part 5. Contractor shall compute wages based on a standard 40-hour workweek and shall compensate covered workers at not less than one and one-half times the basic rate of pay for hours worked in excess of 40 hours in a workweek. No laborer or mechanic shall be required to work under unsanitary, hazardous, or dangerous conditions. These requirements do not apply to purchases of supplies, materials, or articles ordinarily available on the open market, or to contracts for transportation or transmission of intelligence.

8. Rights to Inventions

If the federal award meets the definition of "funding agreement" under 37 C.F.R. § 401.2(a), and the Work involves substitution of parties, assignment, or performance of experimental, developmental, or research work under that funding agreement, Contractor shall comply with 37 C.F.R. Part 401 and any implementing regulations issued by the awarding agency.

9. Clean Air Act and Federal Water Pollution Control Act

For contracts and subgrants exceeding $150,000, Contractor shall comply with all applicable standards, orders, and regulations issued pursuant to the Clean Air Act, 42 U.S.C. §§ 7401-7671q, and the Federal Water Pollution Control Act, 33 U.S.C. §§ 1251-1387. Contractor shall report each violation to the City, and the City will report violations as required to the federal awarding agency and the appropriate EPA regional office. Contractor shall include these requirements in each covered subcontract exceeding $150,000.

10. Debarment and Suspension

Contractor shall comply with Executive Orders 12549 and 12689 and 2 C.F.R. Part 180. Contractor shall not enter into covered transactions with parties listed on the governmentwide exclusions in the System for Award Management. Contractor shall verify that Contractor, its principals, and its affiliates are not excluded or disqualified and shall include this requirement in lower-tier covered

RESERVED

transactions.

11. Byrd Anti-Lobbying Amendment

For awards exceeding $100,000, Contractor shall comply with the Byrd Anti-Lobbying Amendment, 31 U.S.C. § 1352. Contractor shall certify that it has not and will not use federal appropriated funds to pay any person or organization for influencing or attempting to influence an officer or employee of an agency, a member of Congress, an officer or employee of Congress, or an employee of a member of Congress in connection with obtaining a federal contract, grant, or other covered award. Contractor shall disclose lobbying with non-federal funds as required and shall require each lower tier to make the same certification and disclosure.

12. Procurement of Recovered Materials

Contractor shall comply with 2 C.F.R. § 200.323 and Section 6002 of the Solid Waste Disposal Act, as amended by the Resource Conservation and Recovery Act, to the extent applicable. Contractor shall procure designated items containing the highest percentage of recovered materials practicable, consistent with competition and performance requirements, when the purchase price exceeds the applicable threshold or the value of the quantity acquired during the preceding fiscal year exceeded the applicable threshold. Contractor shall also procure solid waste management services in a manner that maximizes energy and resource recovery and shall support the City's affirmative procurement program where applicable.

13. Domestic Preferences for Procurements

As appropriate and to the extent consistent with law, Contractor shall comply with 2 C.F.R. § 200.322 by providing a preference for the purchase, acquisition, or use of goods, products, or materials produced in the United States, including iron, aluminum, steel, cement, and other manufactured products, when the Work is performed under a federal award.

14. Prohibition on Certain Telecommunications and Video Surveillance Equipment or Services

Contractor shall comply with 2 C.F.R. § 200.216 and shall not obligate or expend federal funds to procure, obtain, extend, renew, or enter into a contract to procure or obtain covered telecommunications equipment or services as a substantial or essential component of any system or as critical technology as part of any system. Contractor shall include this prohibition in applicable subcontracts and purchase orders.

15. Build America, Buy America

If the Work is an infrastructure project funded by a federal financial assistance program subject to the Build America, Buy America Act, Contractor shall comply with all applicable domestic content procurement preference requirements for iron, steel, manufactured products, and construction materials permanently incorporated into the project, unless a waiver applies. Contractor shall provide certifications, documentation, and product information required by the City, funding agency, or pass-through entity.

16. Small and Minority Businesses, Women's Business Enterprises, Veteran-Owned Businesses,

RESERVED

and Labor Surplus Area Firms

Contractor shall take the affirmative steps required by 2 C.F.R. § 200.321 to assure that small businesses, minority businesses, women's business enterprises, veteran-owned businesses, and labor surplus area firms are used when possible, including, as applicable, placing such businesses on solicitation lists, soliciting them when they are potential sources, dividing requirements when economically feasible, establishing delivery schedules that encourage participation, using appropriate assistance organizations, and requiring subcontractors to take the same affirmative steps.

17. Bonding Requirements for Federal Construction or Facility Improvement Contracts

For construction or facility improvement contracts or subcontracts exceeding the simplified acquisition threshold, Contractor shall comply with the bonding requirements in 2 C.F.R. § 200.326 when the federal award requires such bonding, including bid guarantee, performance bond, and payment bond requirements unless the federal agency or pass-through entity determines that the City's bonding policy and requirements adequately protect the federal interest.

18. Access to Records; Retention

Contractor shall provide the City, the federal awarding agency, the pass-through entity, the Comptroller General of the United States, and their authorized representatives access to any documents, papers, records, and other materials that are directly pertinent to the federal or grant-funded Work for the purpose of making audits, examinations, excerpts, and transcriptions. Contractor shall retain records for the period required by 2 C.F.R. Part 200, the award terms, the Agreement, and applicable law, whichever is longer.

19. No Obligation by Federal Government

The federal government is not a party to this Agreement or any Task Order and is not subject to any obligations or liabilities to the City, Contractor, or any other party arising from the Agreement or Work.

20. Program Fraud and False or Fraudulent Statements

Contractor acknowledges that 31 U.S.C. Chapter 38 and other federal laws concerning fraud, false claims, and false statements may apply to Contractor's actions pertaining to federally funded or grant-funded Work. Contractor shall not submit false, fictitious, fraudulent, or misleading claims, certifications, invoices, records, or statements.

21. Additional Award-Specific Terms

If the federal awarding agency, pass-through entity, grant agreement, disaster assistance program, or other funding source requires additional clauses, certifications, forms, reporting, wage determinations, environmental/historic preservation conditions, civil rights provisions, procurement certifications, or other requirements, such requirements are incorporated into the affected Task Order upon written notice by the City. Contractor shall execute additional documents reasonably required by the City to document compliance.

RESERVED

CITY COMMISSION MEETING
CITY OF ST. PETE BEACH
COMMISSION CHAMBERS

Agenda Report

Agenda Title Name: Authorize the City Manager to execute the Agreement with BCS Construction Group for Civil On-Call Construction Services on an as-needed basis in an amount not to exceed annually appropriated funding.

Action Request: Motion to authorize the City Manager to execute the Agreement with BCS Construction Group for Civil On-Call Construction Services on an as-needed basis in an amount not to exceed annually appropriated funding.

Strategic Objective: Reliable Infrastructure

Date: June 23, 2026

Prepared By: Camden Mills, Public Services Director

Through: Frances Robustelli, City Manager

Summary of Issue: The City publicly advertised a Request for Proposals (RFP) for a task work order-driven Civil On-Call Construction Services contract. Five (5) responsive proposals were received on March 18, 2026. Following evaluation, the City's selection committee recommended award to Ajax Paving Industries of Florida LLC, BCS Construction Group, Cathcart Construction Company Florida LLC, PCS Civil LLC, and Southern Road and Bridge LLC

- Qualifications and Experience
- References and Past Performance
- Capacity to Perform the Work
- Cost

The contract provides not-to-exceed unit prices for labor, materials, equipment, tools, transportation, and incidentals necessary to perform civil construction services on an as-needed basis throughout the City. Projects may include roadway and intersection improvements, drainage upgrades, ADA improvements, sidewalk construction, alley improvements, signing and pavement markings, recreational trails, traffic signal improvements, and intelligent transportation system (ITS) infrastructure.

Work will be authorized by task order on an as-needed basis in an amount not to exceed annually appropriated funding. The initial contract term is three (3) years with the option for two (2) additional one (1) year renewals upon mutual agreement and annual appropriation of funds.

Approval of this agreement will provide the City with qualified contractors to perform civil infrastructure improvements in a timely and cost-effective manner, improve responsiveness to maintenance and capital project needs, and support implementation of the City's transportation, drainage, utility, and public infrastructure programs.

Funding:

301.5410.563000 Improvements Other Than Buildings (remaining balance $211,746.90)

301.5411.563000 Improvements Other Than Buildings (remaining balance $8,478,760.96)

301.5726.563000 Improvements Other Than Buildings (remaining balance $825,791.26)

Other CIP funding sources may be used based on the available annual budget.

Attachments:

1. BCS Construction Group Contract Signed

CITY OF ST. PETE BEACH, FLORIDA
SERVICES AGREEMENT

Civil On-Call Construction Services

This is an Agreement (the "Agreement") entered into by and between the **CITY OF ST. PETE BEACH** (hereinafter "City") and **BCS CONSTRUCTION GROUP** (hereinafter "Contractor"). The City and Contractor together shall be referred to as the "parties."

WHEREAS, The City properly issued a Request for Bids, attached and incorporated hereto as Exhibit "B" and the City Commission authorized the selection of Contractor at its 06/23/2026, public hearing.

WHEREAS, City desires to purchase from Contractor the services described in this Agreement.

WHEREAS, Contractor is in the business of providing the services described herein, and has submitted an appropriate proposal to the City to provide the same.

WHEREAS, this Agreement has been properly approved by the appropriate authority of the City and the Contractor.

NOW, THEREFORE, upon the mutual covenants contained herein, and other good and valuable considerations, the sufficiency of which is hereby acknowledged, the parties hereto hereby agree to the following:

1. Recitals. The foregoing recitals are true and correct and incorporated herein by reference.

2. Standard Contract Addendum. The attached Standard Contract Addendum, which contains all the Florida Statutorily required provisions applicable to this Agreement, is attached hereto as Exhibit "A" and its provisions modify and supplement this Agreement.

3. Scope of Services. The Contractor must perform all work for the City required by the contract documents as set forth below:

a. Contractor will furnish all labor, materials, and equipment necessary as indicated in the Request for Bids (Exhibit "B") in the amount of Not To Exceed the annual budgeted amount. Funding will be awarded by Task Orders.

b. Contractor must supervise the workforce to ensure that all workers conduct themselves and perform their work in a safe and professional manner. Contractor must comply with all OSHA safety rules and regulations in the operation of equipment and in the performance of the work. Contractor must at all times have a competent field supervisor on the job site to enforce these policies and procedures at the Contractor's expense.

c. Contractor will provide the City with seventy-two (72) hours written notice prior to the beginning of work under this Agreement and prior to any schedule change with the exception of changes caused by inclement weather.

d. Contractor must comply with any and all Federal, State, and local laws and regulations

now in effect, or hereinafter enacted during the term of this Agreement, which are applicable to the Contractor, its employees, agents or subcontractors, if any, with respect to the work and services described herein. The Contractor further warrants that there has been no violation of copyrights or patent rights either in the United States of America or in foreign countries in connection with the work of the contract.

e. Contractor warrants to the City that all goods and materials furnished under the contract will be new unless otherwise specified and that contractor possesses good, clear, and marketable title to said goods and there are no pending liens, claims, or encumbrances whatsoever against said goods. All work not conforming to these requirements, including substitutions not properly approved and authorized may be considered defective. Contractor further warrants that all goods, materials and workmanship furnished, whether furnished by the Contractor or its subcontractors and suppliers, will comply with the specifications, drawings and other descriptions supplied or adopted. Last, Contractor warrants all material and workmanship for a minimum of (1) year from date of project completion and acceptancy by the City. If within one (1) year after acceptance by the City, or within such larger period of time as may be prescribed by law any of the work is found to be defective or not in accordance with the contract documents, the Contractor will, after receipt of a written notice from the City to do so, promptly correct the work.

4. Damages. Time is of the essence in the performance of this Agreement. City shall be entitled to liquidated damages in the amount of $500 per day, for each day after the date set forth in paragraph 10, that Contractor has failed to properly and completely deliver all goods or provide all service specified herein. The Contractor specifically acknowledges that the foregoing sum is reasonable and does not constitute a penalty.

5. Remedies.

   a. Damages. The City reserves the right to recover any ascertainable actual damages incurred as a result of the failure of the Contractor to perform in accordance with the requirements of this Agreement, or for losses sustained by the city resultant from the Contractor's failure to perform in accordance with the requirements of this Agreement.

   b. Correction of Work. If, in the judgment of the City, work provided by the Contractor does not conform to the requirements of this Agreement, or if the work exhibits poor workmanship, the city reserves the right to require that the Contractor correct all deficiencies in the work to bring the work into conformance without additional cost to the City, and/or replace any personnel who fail to perform in accordance with the requirements of this Agreement. The City is the sole judge of non-conformance and the quality of workmanship.

6. Waiver of Liens. Prior to final payment of the Contract Sum, a final waiver of lien must be submitted by all suppliers, subcontractors, and/or Contractors who worked on the project that is the subject of this Agreement.

7. Warranties.
   a. Warranty of Title. Contractor warrants to the City that all goods and materials furnished

under the contract will be new unless otherwise specified and that Contractor possesses good, clear, and marketable title to said goods and there are no pending liens, claims, or encumbrances whatsoever against said goods. All work not conforming to these requirements, including substitutions not properly approved and authorized may be considered defective.

b. Warranty of Specifications. The Contractor warrants that all goods, materials, workmanship furnished, whether by the Contractor or its subcontractors and suppliers, will comply with the specifications, drawings and other descriptions supplied or adopted.

c. Warranty of Merchantability. The Contractor warrants all material and workmanship for a minimum of one (1) year from date of project completion and acceptance by the City. If within one (1) year after acceptance by the city, or within such larger period of time as may be described by law any of the work is found to be defective or not in accordance with the contract documents, the Contractor must after receipt of a written notice from the City to do so, promptly correct the work unless the City has previously given the Contractor a written acceptance of such condition.

8. Term. This Agreement will remain in effect for a period of (3) three years with (2) two, (1) one-year extensions from the Effective Date.

9. Effective date. The "Effective Date" of this Agreement shall be the date this Agreement has been executed by all parties.

10. Termination. This Agreement may be canceled by the City when:
   a. Sufficient funds are not available to continue its full and faithful performance to the Agreement.
   b. Sub-standard or non-performance of Agreement.
   c. The City wishes to terminate the Agreement at any time and for any reason, upon giving thirty (30) days prior written notice to the Contractor.

11. Fiscal Non-funding. If funds for the requested services described herein are not appropriated via the annual budget adoption process, the City reserves the right to cancel the Agreement immediately upon written notice to the Contractor.

12. Non-Exclusivity. Contractor acknowledges that the City may enter into agreements with other consultants or may have its own employees complete the work for services similar to the services that are subject to this Agreement.

13. Compensation. Upon Contractor's satisfactory full performance of the services or in accordance with the payment schedule provided in the attached proposal, City shall pay Contractor, as full consideration for services provided in this Agreement.

14. Insurance. To the extent that this Agreement requires Contractor to provide any services of any kind, Contractor and all of Contractor's subcontractors shall maintain public liability insurance in a combined single limit for bodily injury and property damage in the amount of not less than $1,000,000.00, satisfactory to the City Manager, naming the City as an additionally named insured and providing coverage up through and including the final performance of any services provided

herein. Contractor and all of Contractor's subcontractors shall maintain in full force and effect a policy of worker's compensation insurance for all of Contractor's employees in accordance with applicable state and federal law. Said insurance coverage shall include employer's liability with a single limit of $100,000.00 per accident or occurrence. Contractor shall present City with a certificate for all the foregoing insurance, at the time of executing this Agreement and at such other times requested by the City.

The Contractor waives all rights against the City, its consultants, separate contractors, if any, and any of its subcontractors, agents and employees, for any and all damages caused to the extent covered by insurance described herein and obtained pursuant to this Section or other property insurance applicable to the services and product provided under this Agreement. The City shall require of the Contractor, Contractor's consultants, separate contractors, if any, and the subcontractors, sub-subcontractors, agents and employees of any of them, by appropriate agreements, written where legally required for validity, similar waivers each in favor of other parties enumerated herein. The policies shall provide such waiver of subrogation by endorsement otherwise. A waiver of subrogation shall be effective as to a person or entity even though that person or entity would otherwise have a duty of indemnification, contractual or otherwise, did not pay the insurance premium directly or indirectly, and whether or not the person or entity had an insurable interest in the property damaged.

15. Indemnification. In consideration of the payment of ten dollars as part of the compensation described herein, such sum being specifically found by Contractor to be sufficient consideration for this indemnification, Contractor shall indemnify, defend and hold the City harmless for itself, its past/present/future elected and appointed officials, its employees, agents and assigns, from and against any and all losses, claims, damages, suits, actions, liability or demands, including attorneys' fees and costs of litigation through all appellate proceedings, arising from the performance or non-performance of this Agreement, whether caused in part by the City or not, and in connection with violations of copyrighted or trademarked materials used by Contractor, loss of life, bodily or personal injury, or property damage, including loss of use thereof, directly or indirectly caused by, resulting from, arising out of or occurring in connection with the operations of the Contractor or its officers, employees, agents, subcontractors, or independent Contractors, excepting only such loss of life, bodily or personal injury, or property damage solely attributable to the gross negligence or willful misconduct of the City or its elected or appointed officials and employees. In any and all claims against the City, or any of their agents or employees by any employee of the Contractor any subcontractor, anyone directly or indirectly employed by any of them or anyone for whose acts any of them may be liable, the indemnification obligation under this paragraph is not limited in any way by any limitation in this amount or type of damages compensation or benefits payable by or for the Contractor or any subcontractor under Workers' Compensation Acts, Disability Benefit Acts or other Employee Benefit Acts. Nothing contained herein is intended nor may it be construed, to waive City's rights and immunities under the common law or Section 768.28, Florida Statutes, as amended from time to time; nor will anything included herein be construed as consent to be sued by any third parties in any matter arising out of this Agreement. To the extent considered necessary by the Contract Administrator and the City Attorney, any sums due Contractor under this Agreement may be retained by the City until all of the City's claims subject to this indemnification obligation have been settled or otherwise resolved, and any amount withheld is not subject to payment of interest by the City. The above provisions

will survive the termination or expiration of this Agreement and will pertain to any occurrence during the term of this Agreement, even though the claim may be made after the termination or expiration hereof.

16. Discriminatory Vendor List. Contractor hereby acknowledges its continuous duty to disclose to the City if the Contractor or any of its affiliates, as defined by Section 287.134 (1)(a), Florida Statutes, are placed on the Discriminatory Vendor List. Pursuant to Section 287-134 (2)(a), Florida Statutes: "An entity or affiliate who has been placed on the discriminatory vendor list may not submit a bid, proposal, or reply on a contract to a public entity; may not submit a bid or proposal, or reply on a contract with a public entity for the construction or repair of a public building or public work; may not submit bids, proposals, or replies on leases of real property to a public entity; may not be awarded or perform work as a contractor, supplier, subcontractor, or consultant under a contract with any public entity; and may not transact business with any public entity."

17. Independent Contractor. This Agreement does not create an employee/employer relationship between the parties. It is the intent of the parties that the Contractor is an independent contractor under this Agreement and not the City's employee for any purposes, including but not limited to, the application of the Fair Labor Standards Act minimum wage and overtime payments, Federal Insurance Contribution Act, the Social Security Act, the Federal Unemployment Tax Act, the provisions of the Internal Revenue Code, the State Worker's Compensation Act, and the State Unemployment Insurance law. The Contractor will retain sole and absolute discretion in the judgment of the manner and means of carrying out Contractor's activities and responsibilities hereunder provided, further that administrative procedures applicable to services rendered under this Agreement will be those of Contractor, which policies of Contractor will not conflict with City, State, or United States policies, rules, or regulations relating to the use of Contractor's funds provided for herein. The contractor agrees that it is a separate and independent enterprise from the City, that it had full opportunity to find other business, that it has made its own investment in it business, and that it will utilize a high level of skill necessary to perform the work. This Agreement must not be construed as creating any joint employment relationship between the Contractor and the City and the City will not be liable for any obligation incurred by Contractor, including but not limited to unpaid minimum wages and/or overtime premiums.

18. Audit Rights. The City reserves the right to audit the records of the Contractor for the commodities and/or serves provided under the contract at any time during the performance and term of the contract and for a period of five (5) years after completion and acceptance by the City. If required by the City, the Contractor agrees to submit to an audit by an independent certified public accountant selected by the City. The Contractor must allow the City to inspect, examine and review the records of the Contractor in relation to this Agreement at any an all times during normal business hours during the term of the Agreement.

19. Exhibits. The following Exhibits shall be attached, incorporated, and made a part of this Agreement:
    a. Standard Contract Addendum (Exhibit "A")
    b. Request for Bid/Proposal (Exhibit "B")
    c. Vendor Bid/Proposal (Exhibit "C")

d. Conditional Federal/Grant-Funded Contract Addendum (Exhibit "D")

20. Notices. All notices sent pursuant to this Agreement shall be given in writing via certified mail or overnight courier and shall be delivered to the following addresses:

As to Contractor:
BCS Construction Group
8130 66th Street N
Suite 10
Pinellas Park, FL 33781

As to City:
City Manager
City of St. Pete Beach
155 Corey Avenue
St. Pete Beach, FL 33706

With Copy To:
info@bcsconstructiongrp.com

With Copy To:
attorney@stpetebeach.org

21. Conflicts and Severability. To the extent that any terms in the attached proposal conflict with the terms of this Agreement, the terms of this Agreement shall control and supersede such conflicting terms in the attached proposal, to the extent of such conflict. If any section, part of section, paragraph, clause, phrase, or word of this Agreement is declared invalid, the remaining provisions of this Agreement shall not be affected.

22. Amendments. This document and exhibits embody the entire Agreement of the parties. There are no promises, terms, conditions, or representations binding on either party hereto, other than those contained herein; and this document shall supersede all previous communications, representations, and/or agreements between the parties hereto, whether written or oral. This Agreement shall not be modified by any oral statement, communication, Agreement, course of conduct, or by anything other than a writing signed by the parties. This Agreement may be amended or modified only in writing signed by all parties hereto.

23. Jurisdiction, Venue, Attorney Fees. This Agreement shall be governed and construed according to the laws of Florida, and venue for any action arising herefrom shall be in Pinellas County, Florida. The prevailing party in any action to enforce or interpret this Agreement shall be entitled to reasonable attorney's fees incurred through all appellate proceedings.

24. Assignment. This Agreement shall be binding upon the parties, their successors, assigns, and legal representatives. Contractor shall not assign or otherwise transfer any of the rights or duties under this Agreement, without the express written consent of the City.

25. Counterparts. This Agreement may be executed and delivered in any number of counterparts, each of which so executed and delivered shall be deemed to be an original and all of which shall constitute one and the same instrument. Facsimile, documents executed, scanned and transmitted electronically and electronic signatures shall be deemed original signatures for purposes of this Agreement and all matters related thereto, with such facsimile, scanned and electronic signatures having the same legal effect as original signatures.

26. Authority. Contractor hereby acknowledges that the person executing this Agreement on

behalf of Contractor has the full authority to do so and to bind Contractor to the terms hereof.

IN WITNESS WHEREOF, the Parties have executed this Agreement on the day and year set forth below.

Under penalties of perjury, and pursuant to Sec. 92.525, Fla. Stat., Contractor declares that Contractor has read the Section 15 of the Standard Contract Addendum, Exhibit "A", and that the facts stated in it are true.

BCS Construction Group:	**City of St. Pete Beach:**
Signature: _____	Signature: _____
By: Bruno Sequeira	By: Frances Robustelli
Its: President	Its: City Manager
Date: _____	Date: _____
APPROVED AS TO FORM AND LEGAL SUFFICIENCY:	ATTEST:
_____ Ralf Brooks City Attorney	_____ Renee Rose City Clerk

behalf of Contractor has the full authority to do so and to bind Contractor to the terms hereof.

IN WITNESS WHEREOF, the Parties have executed this Agreement on the day and year set forth below.

Under penalties of perjury, and pursuant to Sec. 92.525, Fla. Stat., Contractor declares that Contractor has read the Section 15 of the Standard Contract Addendum, Exhibit "A", and that the facts stated in it are true.

BCS Construction Group:

Signature: Bruno C Sequeira

By: Bruno Sequeira

Its: President

Date: 6/1/2024

City of St. Pete Beach:

Signature: _____

By: Frances Robustelli

Its: City Manager

Date: _____

APPROVED AS TO FORM
AND LEGAL SUFFICIENCY:

_____
Ralf Brooks
City Attorney

ATTEST:

_____
Renee Rose
City Clerk

EXHIBIT "A"

Standard Contract Addendum

(Place Standard Contract Addendum behind this page)

CITY OF ST. PETE BEACH, FLORIDA
STANDARD CONTRACT ADDENDUM

THIS STANDARD CONTRACT ADDENDUM is made and entered into this _____ day of _____, 2026, by and between the CITY OF ST. PETE BEACH, a Florida municipality, hereinafter referred to as the "City", and _____, hereinafter referred to as "Contractor", concerning that certain agreement dated the ____ day of _____, 2026 ("Agreement") and titled _____.

WITNESSETH:

WHEREAS, Section 119.0701, Fla. Stat., requires that certain public agency contracts must include certain statutorily required provisions concerning the contractor's compliance for Florida's Public Records Act; and

WHEREAS, Section 768.28, Fla. Stat., sets forth certain mandatory limitations on indemnification and liability for Florida public agencies; and

WHEREAS, Florida law requires that public agency contracts be subject to non-appropriation and thereby contingent upon appropriation during the public agency's statutorily mandated annual budget approval process; and

WHEREAS, Section 448.095, Fla. Stat., imposes certain obligations on public agencies with regard to the use of the E-Verify system by their contractors and subcontractors; and

WHEREAS, Section 287.133 and 287.135, Fla. Stat., provides restrictions on local governments contracting with companies that are on certain Scrutinized Companies lists or convicted vendor list; and

WHEREAS, additional terms required by Sections 282.3185(5) and (6) Fla. Stat. related to data management and Section 287.05701 Fla. Stat. related to social government and corporate activism are also added by virtue of this Addendum; and

WHEREAS, Section 286.101, Florida Statutes contains a list of "foreign countries of concern" including, the People's Republic of China, the Russian Federation, the Islamic Republic of Iran, the Democratic People's Republic of Korea, the Republic of Cuba, the Venezuelan regime of Nicolás Maduro, or the Syrian Arab Republic, including any agency of or any other entity under significant control of such "foreign country of concern". Any entity that does business with a state agency or political subdivision must disclose certain of their dealings with those "foreign countries of concern" to the Florida Department of Financial Services; and

WHEREAS, Section 787.06(13), Fla. Stat. provides that when a contract is executed, renewed, or extended between a nongovernmental entity and a governmental entity, the nongovernmental entity must provide the governmental entity with an affidavit signed by an

officer or a representative of the nongovernmental entity under penalty of perjury attesting that the nongovernmental entity does not use coercion for labor or services as defined in such statute;

NOW, THEREFORE, in consideration of the covenants set forth herein, the parties agree to this addendum as follows:

1. Amendment. This Addendum hereby amends and supplements the terms of the Agreement. In the event of a conflict between the terms of the Agreement and terms of the Addendum, the terms of the Addendum shall prevail.

2. Public Records Compliance. Contractor agrees that, to the extent that it may "act on behalf" of the City within the meaning of Section 119.0701(1)(a), Florida Statutes in providing its services under this Agreement, it shall:

(a) Keep and maintain public records required by the public agency to perform the service.

(b) Upon request from the public agency's custodian of public records, provide the public agency with a copy of the requested records or allow the records to be inspected or copied within a reasonable time at a cost that does not exceed the cost provided in this chapter or as otherwise provided by law.

(c) Ensure that public records that are exempt or confidential and exempt from public records disclosure requirements are not disclosed except as authorized by law for the duration of the contract term and following completion of the contract if the contractor does not transfer the records to the public agency.

(d) Upon completion of the contract, transfer, at no cost, to the public agency all public records in possession of the contractor or keep and maintain public records required by the public agency to perform the service. If the contractor transfers all public records to the public agency upon completion of the contract, the contractor shall destroy any duplicate public records that are exempt or confidential and exempt from public records disclosure requirements. If the contractor keeps and maintains public records upon completion of the contract, the contractor shall meet all applicable requirements for retaining public records. All records stored electronically must be provided to the public agency, upon request from the City's custodian of public records, in a format that is compatible with the information technology systems of the City.

(e) Pursuant to Section 119.0701(2)(a), Fla. Stat., **IF THE CONTRACTOR HAS QUESTIONS REGARDING THE APPLICATION OF CHAPTER 119, FLORIDA STATUTES, TO THE CONTRACTOR'S DUTY TO PROVIDE PUBLIC RECORDS RELATING TO THIS AGREEMENT, CONTACT THE CUSTODIAN OF PUBLIC RECORDS AT:**

Renee Rose
City Clerk/Public Records Custodian
cityclerk@stpetebeach.org

Phone: 727-363-9220
155 Corey Avenue
St. Pete Beach, FL 33706
Fax: 727-541-8040

3. Public Records Compliance Indemnification. Contractor agrees to indemnify and hold the City harmless against any and all claims, damage awards, and causes of action arising from the contractor's failure to comply with the public records disclosure requirements of Section 119.07(1), Florida Statutes, or by contractor's failure to maintain public records that are exempt or confidential and exempt from the public records disclosure requirements, including, but not limited to, any third party claims or awards for attorneys' fees and costs arising therefrom. Contractor authorizes the public agency to seek declaratory, injunctive, or other appropriate relief against Contractor in Pinellas County Circuit Court on an expedited basis to enforce the requirements of this section.

4. Compliance/Consistency with Section 768.28, Fla. Stat. Any indemnification or agreement to defend or hold harmless by City specified in the Agreement shall not be construed as a waiver of City's sovereign immunity, and shall be limited to such indemnification and liability limits consistent with the requirements of Section 768.28, Fla. Stat. and subject to the procedural requirements set forth therein. Any other purported indemnification by City in the Agreement in derogation hereof shall be void and of no force or effect.

5. Non-appropriation. City's performance and obligation to pay under this Agreement is contingent upon an appropriation during the City's annual budget approval process. If funds are not appropriated for a fiscal year, then the Contractor shall be notified as soon as is practical by memorandum from the City Manager or designee that funds have not been appropriated for continuation of the Agreement, and the Agreement shall expire at the end of the fiscal year for which funding has been appropriated. The termination of the Agreement at fiscal year end shall be without penalty or expense to the City subject to the City paying all invoices for services rendered during the period the Agreement was funded by appropriations.

6. E-Verify Compliance. By entering into this Agreement, the Contractor is obligated to comply with the provisions of Section 448.095, Fla. Stat. "Employment Eligibility," as amended from time to time. This includes but is not limited to register with and use the E-Verify System to verify the work authorization status of all newly hired employees, and requiring all subcontractors to provide an affidavit to Contractor attesting that the subcontractor does not employ, contract with, or subcontract with, an unauthorized alien. Contractor agrees to maintain a copy of such affidavit for the duration of this Agreement. Failure to comply with this paragraph will result in the termination of this Agreement as provided in Section 448.095, Fla. Stat., as amended and Contractor will not be awarded a public contract for at least one (1) year after the date on which the Agreement was terminated. Contractor will also be liable for any additional costs to the City as a result of the termination of this Agreement in accordance with this paragraph. Contractor affirmatively states, under penalty of perjury, that in accordance with Section 448.095, Fla. Stat., Contractor is registered with and uses the E-Verify system to verify the work authorization status of all newly hired employees, that in accordance with such statute, Contractor requires from each of its subcontractors an affidavit stating that the subcontractor does not employ, contract with, or

subcontract with an unauthorized alien, and that Contractor is otherwise in compliance with Sections 448.09 and 448.095, Fla. Stat.

7. Compliance/Consistency with Scrutinized Companies Provisions of Florida Statutes. Section 287.135(2)(a), Fla. Stat., prohibits a company from bidding on, submitting a proposal for, or entering into or renewing a contract for goods or services of any amount if, at the time of contracting or renewal, the company is on the Scrutinized Companies that Boycott Israel List, created pursuant to Section 215.4725, Fla. Stat., or is engaged in a boycott of Israel. Section 287.135(2)(b), Fla. Stat., further prohibits a company from bidding on, submitting a proposal for, or entering into or renewing a contract for goods or services over one million dollars ($1,000,000) if, at the time of contracting or renewal, the company is on either the Scrutinized Companies with Activities in Sudan List or the Scrutinized Companies with Activities in the Iran Petroleum Energy Sector List, both created pursuant to section 215.473, Fla. Stat., or the company is engaged in business operations in Cuba or Syria. Contractor hereby certifies that Contractor is not listed on any of the following: (i) the Scrutinized Companies that Boycott Israel List, (ii) Scrutinized Companies with Activities in Sudan List, or (iii) the Scrutinized Companies with Activities in the Iran Petroleum Energy Sector List. Contractor further hereby certifies that Contractor is not engaged in a boycott of Israel or engaged in business operations in Cuba or Syria. Contractor understands that pursuant to section 287.135, Fla. Stat., the submission of a false certification may subject Contractor to civil penalties, attorney's fees, and/or costs. Contractor further understands that any contract with City for goods or services of any amount may be terminated at the option of City if Contractor (i) is found to have submitted a false certification, (ii) has been placed on the Scrutinized Companies that Boycott Israel List, or (iii) is engaged in a boycott of Israel. And, in addition to the foregoing, if the amount of the contract is one million dollars ($1,000,000) or more, the contract may be terminated at the option of City if the company is found to have submitted a false certification, has been placed on the Scrutinized Companies with Activities in Sudan List or the Scrutinized Companies with Activities in the Iran Petroleum Energy Sector List, or has been engaged in business operations in Cuba or Syria.

8. Disclosure Requirements for "Foreign Countries of Concern". CONTRACTOR shall comply with the disclosure requirements set forth is Section 286.101 (3) (a), Fla. Stat., which requires "Any entity that applies to a state agency or political subdivision for a grant or proposes having a contract value of $100,000 or more shall disclose to the state agency or political subdivision any current or prior interest of, any contract with, or any grant or gift received from a "foreign country of concern" if such interest, contract, grant or gift received from a "foreign country of concern" if such interest, contract, grant or gift has a value of $50,000 or more and such interest existed at any time or such contract, grant or gift was received or in force at any time during the previous five (5) years. Such disclosure shall contain the name and mailing address of the disclosing entity, the amount of the gift or the value of the interest disclosed, the applicable "foreign country of concern" and, if applicable the date of termination of the contract or interest, the date of receipt of the grant or gift and the name of the agent or controlled entity that is the source or interest holder. Within one (1) year before applying for any grant or proposing any contract, such entity must provide a copy of such disclosure to the Department of Financial Services". Pursuant to Section 286.101(7), Fla. Stat.: "In addition to any fine assessed under [section 286.101(7)(a), F.S.], a final order determining a third or subsequent violation by an entity other than a state agency or political subdivision shall automatically disqualify the entity from

eligibility for any grant or contract funded by a state agency or any political subdivision until such ineligibility is lifted by the Administration Commission for good cause."

9. Venue and Jurisdiction. Notwithstanding any of other provision to the contrary, this Agreement and the parties' actions under this Agreement shall be governed by and construed under the laws of the State of Florida, without reference to conflict of law principles. As a material condition of this Agreement, each Party hereby irrevocably and unconditionally: i) consents to submit and does submit to the jurisdiction of the Circuit Court in and for Pinellas County, Florida for any actions, suits or proceedings arising out of or relating to this Agreement. Both parties waive any right to file an action, suit or proceeding in Federal Court or remove any action, suit or proceeding to Federal Court.

10. Attorneys' Fees and Costs. Notwithstanding any of other provision to the contrary, if litigation ensues regarding this Agreement, each party hereto shall bear its own attorneys' fee and costs.

11. Public Entities Crime or Convicted Vendor List. Contractor agrees and assumes a continuous duty to disclose to the City if the Contractor or any of its affiliates as defined by Section 287.133(1)(a), Florida Statutes are placed on the Convicted Vendor List or the Antitrust Violator Vendor List maintained by the Florida Department of Management Services.

12. Data Management; Notice of Breach. Contractor shall cooperate with the City and provide timely incident reporting, response activities/fact gathering, public and agency notification, severity level assessment, after-action reports, etc., which the City must report in accordance with Sections 282.3185(5) & (6), Florida Statutes in the event of a data breach.

13. Environmental and Social Government and Corporate Activism. The City has not given preference or requested documentation from the Contractor based on Contractor's social, political or ideological interest. Contractor agrees to similarly not request documentation or give preference to any subcontractor based on the subcontractor's social, political or ideological interests.

14. Taxes. The City shall not be liable for any taxes and assessments imposed by a federal, state or local governmental agency to the extent that the City is exempt from same by Florida law, including but not limited to any sales or use tax.

15. No coercion for labor or services. The Contractor swears under penalty of perjury that the Contractor does not use coercion for labor or services as defined as follows:

"Coercion" means:

1. Using or threatening to use physical force against any person;
2. Restraining, isolating, or confining or threatening to restrain, isolate, or confine any person without lawful authority and against her or his will;
3. Using lending or other credit methods to establish a debt by any person when labor or services are pledged as a security for the debt, if the value of the labor or services as reasonably assessed is not applied toward the liquidation of the debt, the length and nature of the labor or services are not respectively limited and defined;

4. Destroying, concealing, removing, confiscating, withholding, or possessing any actual or purported passport, visa, or other immigration document, or any other actual or purported government identification document, of any person;

5. Causing or threatening to cause financial harm to any person;

6. Enticing or luring any person by fraud or deceit; or

7. Providing a controlled substance as outlined in Schedule I or Schedule II of Sec. 893.03, Fla. Stat. to any person for the purpose of exploitation of that person.

16. Force Majeure. The City reserves the right to suspend, modify or terminate this contract in the event of an act of god or act of man beyond the control of the parties, including but not limited to a hurricane, tropical storm, tornado, or other destructive weather event, flooding, pandemic, plague, war, armed conflict, domestic or foreign terrorism, riot, labor condition, state or federal governmental action, and catastrophic Internet disturbance, making performance inadvisable, economically impracticable, illegal, or impossible.

17. Additional Terms. Notwithstanding any of other provision to the contrary, the parties agree as follows:

A. None.

IN WITNESS WHEREOF, the parties hereto have executed and delivered this instrument on the days and year indicated below and the signatories below to bind the parties set forth herein.

Under penalties of perjury, and pursuant to Sec. 92.525, Fla. Stat., Contractor declares that Contractor has read the foregoing Section 15 above and that the facts stated in it are true.

Contractor:

_____

Print Name: _____

Title: _____

Company: _____

ATTEST:

_____
Renee Rose, City Clerk

City of St. Pete Beach:

_____
Frances Robustelli, City Manager

4. Destroying, concealing, removing, confiscating, withholding, or possessing any actual or purported passport, visa, or other immigration document, or any other actual or purported government identification document, of any person;

5. Causing or threatening to cause financial harm to any person;

6. Enticing or luring any person by fraud or deceit; or

7. Providing a controlled substance as outlined in Schedule I or Schedule II of Sec. 893.03, Fla. Stat. to any person for the purpose of exploitation of that person.

16. Force Majeure. The City reserves the right to suspend, modify or terminate this contract in the event of an act of god or act of man beyond the control of the parties, including but not limited to a hurricane, tropical storm, tornado, or other destructive weather event, flooding, pandemic, plague, war, armed conflict, domestic or foreign terrorism, riot, labor condition, state or federal governmental action, and catastrophic Internet disturbance, making performance inadvisable, economically impracticable, illegal, or impossible.

17. Additional Terms. Notwithstanding any of other provision to the contrary, the parties agree as follows:

A. None.

IN WITNESS WHEREOF, the parties hereto have executed and delivered this instrument on the days and year indicated below and the signatories below to bind the parties set forth herein.

Under penalties of perjury, and pursuant to Sec. 92.525, Fla. Stat., Contractor declares that Contractor has read the foregoing Section 15 above and that the facts stated in it are true.

Contractor:

Bruno C Sequeira

Print Name: Bruno C Sequeira

Title: President

Company: BCS Construction Group

ATTEST:

Renee Rose, City Clerk

City of St. Pete Beach:

Frances Robustelli, City Manager

EXHIBIT "B"

Request for Bid/Proposal

(Place Request for Bid/Proposal behind this page)

City of St Pete Beach
Request for Proposal

Civil On Call Construction Services

Timeline	Date	Time
Publication of Bid	03/11/2026	8:00 AM
Pre-Bid Meeting	03/18/2026	10:00 AM
Deadline for Question Submission	03/25/2026	10:00 AM
Submittal Deadline electronically via Bonfire	04/08/2026	9:00 AM
Submittal Opening	04/08/2026	11:00 AM

Submittals are due on or before
04/08/2026 at 9:00 AM EST
Electronically Via Bonfire Only

TABLE OF CONTENTS

I. INVITATION 3
II. STATEMENT OF WORK 4
III. BID FORM 26
IV. GENERAL CONTRACT TERMS 27
V. REFERENCES & MINIMUM QUALIFICATIONS 38
VI. CONTRACTOR'S PROPOSAL SUBMITTAL 39
VII. PUBLIC ENTITY CRIMINAL AFFIDAVIT 40
VIII. NON-COLLUSION AFFADAVIT 42

I. INVITATION

The City of St Pete Beach has issued this Request for Proposal (RFP) to solicit competitive bids and proposals from Proposers for a Task Work Order driven Civil On-Call Construction Services Contract. The successful bidder shall provide all labor, materials, equipment, tools, consumables, transportation, and incidentals to provide Public Services capital improvement projects construction services on an 'as needed' basis for the City of St Pete Beach.

The types of projects that may be assigned under this Contract shall include, but not be limited to:

- intersection/roadway improvements
- drainage upgrades and/or installations
- ADA upgrades and pedestrian/bicyclist improvements
- sidewalk installations and upgrades
- alley improvements
- median modifications
- signing and pavement markings
- recreational trails
- signal upgrades and installations
- intelligent transportation systems (ITS) components upgrades

CONTACT INFORMATION
Procurement Manager – Sara Spain
Email – purchasing@stpetebeach.org

II. STATEMENT OF WORK

PART I: GENERAL REQUIREMENTS

1. SPECIAL CONDITIONS

A. **Local Preference, Location Points and Tie Breakers**

Location preferences do not apply due to the fact that some task orders may be funded with state or federal dollars.

B. **Minority Business Enterprise Policy**

Minority Business Enterprise Evaluation Criteria do not apply due to the fact that some task orders may be funded with state or federal dollars.

C. **Scrutinized Companies**

Scrutinized Companies with activities in Sudan List or activities in the Iran Petroleum Energy Sector List do not apply due to the fact that some task orders may be funded with state or federal dollars.

D. **Bonding and Credit**

Contractor/Vendor shall provide a letter of bondability showing their maximum bonding capacity.

E. **Contract Term**

This will be a three (3) year initial contract with the option to be extended for two (2) additional one (1) year periods upon mutual consent of both parties. It is the intent of the City of St Pete Beach to award these services to more than one Contractor/Vendor.

F. **Contract Pricing**

Contract prices for equipment and/or service will remain firm through the first three (3) contract years. Sixty (60) days prior to the contract renewal date, Contractor/Vendor may request a price adjustment. The price adjustment and justification must be submitted in writing, and be approved by the City. Said price increase may not, under any circumstances, exceed three (3) percent of the Construction CPI. No retroactive contract price adjustments will be allowed. If the Contractor/Vendor fails to submit a price adjustment within the sixty (60) days prior to the contract renewal date, current contract pricing will continue for the contract renewal period.

G. **Work Assignments**

All work to be performed shall take the following into consideration prior to assignment of any work to any Contractor/Vendor, at the discretion of the Procurement Manager:

1. **Estimated Cost < $250,000.00:**

The City retains the right to select any Contractor/Vendor to whom a multiple-award contract has been made when the opportunity to submit a quote for any job whose estimated cost is less than Two Hundred & Fifty Thousand Dollars ($250,000.00).

2. **Estimated Cost > $250,000.00 and < $500,000.00:**

The City shall obtain three (3) quotes from any Contractor/Vendor to whom a multiple vendor award has been made, for those jobs whose estimated cost is greater than Two Hundred & Fifty Thousand Dollars ($250,000.00) and less than Five Hundred Thousand Dollars ($500,000.00).

3. **Estimated Cost > $500,000.00:**
   a. The City retains the right to separately and competitively bid any and all projects whose cost estimates are greater than Five Hundred Thousand Dollars ($500,000.00). The determination will be made by the City Procurement Manager.
   b. Projects that exceed Five Hundred Thousand Dollars ($500,000.00) may not be sub-divided into separate projects in order to circumvent such requirement.

4. **Reassignment of Work:**

The City retains the right and authority to reassign work to another Contractor/Vendor, at any time, for the following reasons:

a. The lowest Contractor/Vendor cannot comply with the specifications in cases of an emergency.
b. The lowest Contractor/Vendor cannot respond to the job requirements, at the time, due to scheduling conflicts, staffing considerations or other reasonable cause(s) for preventing their completion of the task as required.
c. The City shall have the option to solicit additional quotes, bids, or even professional opinion about a particular job when in its best interest and could engage the services of another company/Contractor/Vendor. This exception will always require advanced written notice and explanation by the requesting City Department to the Procurement Manager, for approval, before authorizing any contemplated work to be done. The receipt of the approved purchase order shall be understood that all work is to immediately begin on the project, per the project schedule and needs as identified by the City and as agreed upon by the Contractor/Vendor.

5. **Cumulative Work shall not exceed $4,000,000.00:**

The cost of all work completed by a Contractor/Vendor shall not exceed Four Million Dollars ($4,000,000.00) in a calendar year. If all costs are expected to exceed this threshold, these services will need to be separately re-bid through issuance of a new set of bid specifications.

H. **Quotes**

1. The City will request a quote if and when needed. Vendors participating in the contract shall have ten (10) business days from written notification to respond to quotes, unless waived by the Procurement Manager. If work is an emergency, as determined by the City, vendors shall have (24) hours from email or phone notification to respond to quotes.
2. A Task Order Form will be provided to awarded Contractor/Vendor. A properly executed Purchase Order shall be issued for the work assignment and shall have the Task Order Form and all related paperwork attached as backup. The Purchase Order shall indicate the start and end dates for the project.
3. If the Contractor/Vendor does not wish to issue a quote for or cannot meet the requirements of the project, inclusive of the time given in which to complete the job; the Contractor/Vendor shall complete the Work Order Form by noting "No Quote" on the form itself and by also providing an explanation as to why they are not submitting a quote.
4. Final costs for any individual project shall not exceed the original approved and total cost for such project by more than ten percent (10%). Any and all anticipated project cost increases are subject to advanced approval by the Procurement Manager.
5. Any Contractor/Vendor that fails to submit a quote successively three (3) times in a row may have their contract cancelled due to non-performance.

I. **Notice to Proceed (NTP)**

All task orders $250,000.00 or less will use the purchase order as the Notice to Proceed (NTP). The start date and date or the number of day to complete the project must be included on the purchase order. If the start date is left off the purchase order then the date of the purchase order approval will default as the NTP start date. Projects over $250,000.00 will have a formal NTP issued through the Purchasing Division. All task orders must be reviewed by the Purchasing Division before a purchase order or NTP is issued.

J. **Liquidated Damages**

Liquidated damages will be assessed to the Contractor/Vendor/vendor for each consecutive calendar day completion of the project or work is delayed. The amount of liquidated damages will be dependent on the cost of the task order and will be calculated using the chart below.

Estimated Project Cost Over	Estimated Project Cost But Less than	Daily Charge Per Calendar Day
$0.00	$50,000.00	$960.00
$50,000.00	$250,000.00	$965.00
$250,000.00	$500,000.00	$1,245.00
$500,000.00	$2,500,000.00	$1,665.00
$2,500,000.00	$5,000,000.00	$2,715.00

K. **Project Spreadsheet Submittal**

Contractor/Vendor must submit a formal spreadsheet using the process below.

1. List of completed projects to include:
   a. Relevant project experience includes construction and delivery methods relevant to the type of project to be constructed utilizing the CM/GC method (or performing as a General Contractor/Vendor on similar types and sizes of projects).
   b. Describe no more than ten (10) and no less than five (5) projects in order of most relevant to least relevant (similar type of construction with a contract dollar amount of $500,000.00 or less) which demonstrates the firm's capabilities to perform such projects.
   c. For each project, the following information should be provided:
      i. Project name
      ii. Project location
      iii. Dates during which services were performed
      iv. Physical description (e.g. square footage, key components, site area)
      v. Brief description of Project Services performed by CM/GC or GC Firm.
      vi. Owners Information:
         a. Contact person
         b. Telephone number
         c. Email
         d. Project name
         e. Owner reference
         f. Original Contract Price
      vii. Amount of Change Orders by:
         a. Your Company
         b. Consultant
         c. Client/Entity
      viii. Final Project Price
      ix. Proposer should include a table with this information layout as follows:

Entity Name and Project Name	Contact Person Phone Email	Begin Project Amount	Change Orders by CMR	Change Orders by Engineer	Change Orders by Entity	Final Cost of Projects	Original Days for Construction	Final Construction Days

2. Any outstanding accomplishments of the firm that relates to the specific services being sought.

3. Any Quality Assurance and Value Engineering Programs should also be included.

2. STANDARD SPECIFICATIONS

The Project shall be constructed in accordance with these specifications, the Pinellas County Engineering Standard Details and the Florida Department of Transportation "Standard Specifications for Road and Bridge Construction", Latest Edition.

3. GOVERNING DOCUMENTS

The Specifications and all supplementary documents are essential parts of the Contract, and a requirement occurring in one is as binding as though occurring in all. They are intended to be complimentary and to describe and provide for a complete project. In case of discrepancy, calculated dimensions will govern over scaled dimensions.

The Contractor shall take no advantage of any apparent error or omission in the specifications. If the Contractor discovers such an error or omission, they shall immediately notify the Project Manager. The Project Manager will then make such corrections and interpretations as may be deemed necessary for fulfilling the intent of the specifications.

4. COOPERATION WITH OTHERS

The Contractor shall cooperate with the owners of any underground or overhead utilities in their removal and rearrangement operations in order that these operations may progress in a reasonable manner and that service rendered by these parties will not be interrupted.

A. Permits

1. City ROW Use Permit: The Contractor will obtain a Right of Way Use Permit from the City Permits Division located at 155 Corey Avenue, Florida. There will be no fee for this permit.
2. Public Services will require shop drawings, schedule, and the location of staging areas at the pre-construction meeting. Where the Contractor wishes to use private property, he shall obtain permission from the owner in writing and submit a copy at the first meeting.
3. The Contractor will be responsible for the requirements of all permits. There may be FDOT permits required for this project.

5. LINES, GRADES AND CONSTRUCTION SURVEYING

The Contractor shall lay out the work from the benchmarks, grades, dimensions, points and lines noted on the working drawings, established at the site, or supplied by the Project Manager. All work of every description shall be laid out and checked by the Contractor who will be held solely responsible for its correctness, and the Contractor shall pay for all expenses in connection with this work. The Contractor shall request clarification from the Project Manager of any errors, inconsistencies or omissions which they may discover. It is the Contractor's responsibility to review every street prior to milling and paving, including the inspection of overhead tree limbs, overgrown grass on pavement, manholes and gate valves.

The work may be checked by the Project Manager, and in the event of a discrepancy, their decision shall be final. No special compensation will be made to the Contractor to defray costs of any work or delays occasioned by making surveys and measurements, tests, or inspections, but such costs shall be considered as having been included in the price stipulated for the several items of work to be done under this Contract.

All attempts shall be made to protect existing property corner monumentation. The monumentation must be identified and marked prior to construction to ensure its permanency. All survey monuments, property corners, and benchmarks, which may be disturbed during construction, shall be referenced and replaced by the Contractor. All monuments and benchmarks disturbed or destroyed by the Contractor or any of his forces through accident or negligence shall be replaced by a Florida Licensed Professional Land Surveyor at the Contractor's expense. All survey markings shall be brought to the attention of the Project Manager.

6. MAINTENANCE OF DETOURS

The Contractor shall repair, at his expense, all potholes and other localized failures on streets which are used as detour routes to facilitate construction operations.

7. REPLACEMENT OF TRAFFIC, STREET SIGNS, SIGNAL LOOPS AND MAILBOXES

The Contractor shall remove and re-erect all existing traffic, street signs and mailboxes within the project site at his own expense for those which must be moved or relocated to permit construction operations.

The Contractor shall notify the City prior to disturbing any traffic signal loops and the City will install new traffic signal loops under a separate contract.

8. USE OF PREMISES

The Contractor shall confine all apparatus to the roadway or right-of-way in which the work is being performed and will not unreasonably encumber these premises with such apparatus, materials, supplies, and equipment. The Contractor shall promptly remove and dispose of all debris resulting from his operations.

9. PROSECUTION OF WORK/ LIQUIDATED DAMAGES

The Contractor shall begin work on any project/road no later than fourteen (14) calendar days after receipt of the "Notice to Proceed"; and shall diligently prosecute the same to project completion prior to the expiration of the total number of calendar days determined necessary for the project, from the date of said "Notice to Proceed".
Failure to complete each project within the determined number of calendar days shall cause the Contractor to be subject to the provisions for Liquidated Damages. The Contractor shall pay to the City as fixed liquidated damages for each calendar day of delay until the work is complete or accepted, and the Contractor and their sureties, jointly and severally, shall be liable for the amount thereof:

A. For each Task Work Order issued, the City project manager will determine the required number of days for completion of all work as well as the amount for liquidated damages, as appropriate.

B. Liquidated Damages will be assessed in accordance with Part I, 2. Special Conditions, J. Liquidated Damages of these bid specifications.

** Please refer to City of St Pete Beach Terms and Conditions, “Liquidated Damages, Penalties and Non-Conformance to Contract”

10. CONSTRUCTION SCHEDULE

A. Work shall be performed on an “as needed” basis for a **three (3) year contract period**. Upon mutual consent, this agreement may be extended for **two (2) additional one (1) year periods**, subject to the same terms and conditions and available funding being in place. No guarantee of volume or quantity of work is intended.

B. At the direction of the City of St Pete Beach, the Contractor will not be allowed to proceed with the scheduled work until restoration of preceding work areas are restored to the satisfaction of the City of St Pete Beach. It is the intent of this project to:

1. Start paving each street no later than three (3) working days after milling each street. If the street has not been paved after three (3) working days, a fee equal to the daily amount for liquidated damages indicated in Item #2J (above) will be assessed until the street has been paved. The time limit for streets to be paved where sewer manhole castings or water valve boxes need to be adjusted or replaced will be three (3) working days after the casting or water valve boxes have been adjusted or replaced.

2. Complete restoration including temporary striping and clean-up, shall be finished in no more than five (5) working days after the completion of paving activity and as directed by the City.

3. No work shall be done during the week between the hours of 9:00 PM and 6:00 AM, or between the hours of 9:00 PM and 9:00 AM on weekends or holidays; except for emergency work by a public service utility or by other permit approved by the City.
4. Night work may be established by the Contractor as regular procedure by obtaining the written permission of the City. Such permission may be revoked at any time by the City, if the Contractor fails to maintain adequate equipment and supervision for the proper execution, control, and safety of the work at night.

C. Work may need to be performed under more urgent timeline at the direction of the City of St Pete Beach. The Contract bid form includes pay items for Emergency Mobilizations for such occurrences. The Contactor shall respond to Emergency Work Requests within 24 hours and should expect to mobilize in less than 72 hours.

11. CONTRACTOR'S ACCEPTANCE OF CONDITIONS

The provisions of this Contract shall control any inconsistent provisions contained in the specifications. All Drawings and Specifications have been read and carefully considered by the Contractor, who understands the same, and agrees to their sufficiency for the work to be done.

It is expressly agreed that under no circumstances, conditions or situations shall this Contract be more strongly construed against the City than against the Contractor and his Surety.

Any ambiguity or uncertainty in the Drawings or Specifications shall be interpreted and construed by the Project Manager, or their designee, and their decision shall be final and binding upon all parties.

It is distinctly understood and agreed that the passing, approval and/or acceptance of any part of the work or material by the City, the Project Manager, or by any agent or representative as in compliance with the terms of this Contract and/or of the Drawings and Specifications covering said work, shall not operate as a waiver by the City of strict compliance with the terms of this Contract, and/or the Drawings and Specifications covering said work; and the City may require the Contractor and/or his surety to repair, replace, restore and/or make to
comply strictly and in all things with this Contract and the Drawings and Specifications any and all of said work and/or materials which within a period of one year from and after the date of the passing, approval, and/or acceptance of such work or material, are found to be defective or to fail in any way to comply with this Contract or with the Drawings and Specifications.

This provision shall not apply to materials or equipment normally expected to deteriorate or wear out and become subject to normal repair and replacement before the condition is discovered. The Contractor shall not be required to do normal maintenance work under the guarantee provisions. Failure on the part of the Contractor and/or his surety, immediately after notice to either repair or replace any such defective materials and workmanship, shall entitle the City, if it sees fit, to replace or repair the same and recover the reasonable cost of such replacement and/or repair from the Contractor and/or his surety, who shall in any event be jointly and severally liable to the City for all damage, loss and expense caused to the City by Reason for the Contractor's breach of this Contract and/or his failure to comply strictly and in all things with this Contract and with the Drawings and specifications.

12. HAZARDOUS MATERIALS

The Contractor shall be responsible for the independent inspection and certification of the removal, transportation and disposal of all identified and all unidentified hazardous materials located within the project site.

13. JOB CONDITIONS

A. The Contractor is to provide the City with a working schedule prior to commencing the project. The City reserves the right to revise and/or adjust the schedule accordingly.

B. City Notification**:** At least 72 hours in advance of closing, or partially closing, any street, alley, or other public thoroughfare, the Contractor shall notify the Engineering Division of the Public Services Department, and immediately notify the same agencies of the reopening.

C. Customer Notification**:** The City of St Pete Beach residents occupying a home on the street to be milled and paved shall be notified seven (7) days before the construction of the street begins. This is completed by the following:

1. A door hanger notice will be provided by the Department of Public Services. It shall contain the reason for the construction, the overall length of time with dates, any problems that may be encountered and other important information regarding the project. The Contractor is responsible for the installation of the door hanger notices no later than seven (7) working days before the construction of the street begins.

2. The Contractor shall hand this notice to each resident. If the resident is not available, the Contractor is to place the door hanger on the doorknob. In certain sensitive areas, usually business areas and as requested by the Engineer, each customer may be asked to sign a signature sheet with their name, address, and signature. The original shall be given to the Department of Public Services before any construction commences.

D. Utility Emergency Access**:** All fire hydrants, valves, water meters and backflow assemblies shall be free of all construction material and equipment and in plain view for easy emergency access or necessary maintenance by the City crews.

E. Pedestrian or School Crossings**:** Where the work crosses or interferes with school or pedestrian crossings, extreme care shall be taken by the Contractor to insure the safety of the school children or other pedestrians.

F. Temporary Staging Areas**:** The Contractor shall obtain all temporary construction staging areas approvals required and shall not encroach onto private property unless a written agreement has been made between the property owner and the Contractor; or onto public property unless a written agreement has been made and approval by the Purchasing Division's designee has been received prior to using the land. The Contractor shall assume full responsibility for the protection and safekeeping of materials stored at the staging areas.

G. Erosion Control**:** Prior to construction, all efforts for siltation/erosion control will be taken, including the use of turbidity screens, hay bales, and sod replacement at the earliest possible time prior to and after excavation/grading. Sediment/erosion controls should be used around drainage structures and any areas to mitigate erosion on or off the project site. The Contractor is responsible for any removal of asphalt debris in manholes or drainage structures.

H. Road Hauling**:** The existing paved roads in the City shall be used for transporting material required for construction of the project. The Contractor should be aware that any road that is damaged during construction due to truck/equipment involvement would be the responsibility of the Contractor to correct. The Contractor shall contact the City for specific routes to be used during construction.

I. Water on Street**:** All water shall be removed, and the streets dry prior to paving. No paving shall take place during a rainstorm event.

J. Towing of Vehicles**:** The City will remove any cars parked in the way of the resurfacing project as long as proper notification has been given as stated under Section 13.c. (above) of the Scope of Work.

K. Clippings**:** Where grass, tree roots or other vegetation has grown over or above the edge of the asphalt, it shall be removed to the existing edge of asphalt by the Contractor prior to paving the street.

L. City Utilities**:** If work by the Contractor results in damage to City owned utilities; the Contractor shall repair the damage immediately at no cost to the City. If the Contractor does not respond immediately to repair the damaged utility, the City Utilities Department will make the repair and bill the Contractor for the costs incurred.

M. Dumpsters**:** The City will relocate all dumpsters in the way of this project. The Contractor is to provide written notice to the City forty-eight (48) hours in advance when said dumpsters need to be moved.

N. Disturbed Areas**:** All areas disturbed by the construction shall be restored to a condition at least equal to the pre-construction conditions or to what shall be approved by the Project Manager.

O. Security**:** The Contractor shall be responsible for the site security and shall determine whether full time watchmen will be required. The Contractor shall inspect the area daily and take whatever measures necessary to protect the safety of the public, workmen and materials both day and night.

P. Brick/Driveways**:** The Contractor shall be responsible for the tack coat not being spread to the brick crosswalks, brick intersections, brick speed tables, driveways or other similar areas due to the hauling of the asphalt. These areas shall be covered with sand or other City approved material. If tack appears on these items from the Contract, it shall be the responsibility of the Contractor to remove it.

Q. Interference with Others**:** The Contractor shall coordinate with Pinellas Suncoast Transit Authority or any public agency to notify the agency of any and all potential disruption in service. The Contractor shall not interfere with materials, appliances, or workmen of the City, Private Utility Companies, or any other contractor, who may be performing work at the same sites. All contractors and other parties involved shall have equal rights as far as practicable, to the use of all roads and grounds, except as otherwise provided by these specifications. The decision of the Project Manager shall govern in cases of disagreement between contractors or other parties regarding such use.

R. Public Safety**:** The Contractor shall provide, erect, and maintain continually, seven days per week and twenty-four hours per day, all necessary barricades, reflectorized signs, signals, flashing lights, red lights, "danger" or "caution" or "street closed" signs, etc., and take all necessary precautions necessary for the protection of the work and the safety of the public. The Contractor shall also provide a watchman at all places where the work causes obstructions to normal traffic or constitutes in any way a hazard to the public.

S. Cleaning Up**:** The Contractor shall always keep the construction area clean from accumulation of waste material or rubbish, including storage areas. The Contractor shall remove any rubbish, tools, scaffolding, equipment and materials from and about the premises, which do not belong to the City, prior to completion of the work. The Contractor shall leave the work and premises, following the completion of work, in a clean and workmanlike condition satisfactory to the Project Manager or their representative.

T. Coordination of Details with the County Sheriff**:** Any traffic detour plan must be submitted by the Contractor for approval to the Engineer of Record, the Engineering Division of the Public Services Department and the Pinellas County Sheriff at least two (2) weeks prior to the implementation of said detour in order to provide adequate time for review. Detour plans must include all streets involved in the detour.

U. Maintaining Proper Drainage Flow**:** No drainage structure or paved waterway shall be blocked by the new pavement work. New pavement shall be feathered or tapered towards the inlet opening. This task is to be included as part of the paving operation and there shall be no separate payment for this work. Any debris entering the drainage structure during construction is to be removed by the Contractor.

V. Responsibility of the Contractor**:** The Contractor shall be entirely responsible and liable for all damage or injury as a result of his operations to all other adjacent public and private property, structures of any kind and appurtenances thereto met with during the progress of the work. The cost of protection, replacement in their original locations and conditions or payment of damages for injuries to such adjacent public and private property and structures affected by the work, whether or not shown on the drawings and the removal, relocation and reconstruction of such items called for on the drawings or specified shall be included in the various Contract Items and no separate payments shall be made thereof. Where such public and private property, structures of any kind and appurtenances thereto are not shown on the drawings and when, in the opinion of the Project Manager to avoid interference with the work, payment therefore will be made as provided for extra work in the Agreement. The Contractor is expressly advised that the protection of the buildings, structures, tanks, pipelines, and related work adjacent and in the vicinity of his operations, wherever they may be, is solely his responsibility.

W. Protection of Trees, Lawn & Sod**:** All trees, shrubs and sod shall be adequately protected by and in accordance with all ordinances governing the protection of the trees. No materials shall be placed so as to injure such trees, shrubs and sod. Trees, shrubs and sod destroyed by negligence of the Contractor or his employees shall be replaced by him with new stock of similar size and age, at its proper season and at the sole expense of the Contractor. Trees close to the work shall be protected against injury. The Contractor shall trim all branches and roots in the road that are necessary to complete the project and are liable to damage his operations, but in no case shall any tree be cut or removed without prior notification of the Project Manager. It is the Contractor's responsibility to inspect all roads that are to be milled and resurfaced. All injuries to bark, trunk, limbs, and roots of trees shall be repaired by dressing, cutting, and painting according to approved methods, using only approved tools and materials under the direction of City Staff. Lawn areas shall be left in good condition as before the starting of the work. Where sod has been removed shall be restored with new sod in a good workmanship manner approved by the resident or the Project Manager. The sod shall match existing grass and shall have no visible broad leaf weeds or foreign grasses. Water for the sod shall be supplied by the Contractor in sufficient quantities required to keep the grassed areas moist for a period of one month from the date of installation. The Contractor shall guarantee the satisfactory growth for a 90-day period.

X. Noise**:** The Contractor shall eliminate noise to as great an extent as practicable at all times. Air compressing equipment shall be equipped with silencers and the exhaust of all gasoline motors or other power equipment shall be provided with mufflers. In the vicinity of hospitals and schools, special care shall be used to avoid noise or other nuisances. The Contractor shall strictly observe all local regulations and ordinances covering noise.

Y. Access to Public Services**:** No materials used in the construction of the work shall be placed as to prevent free access to all fire hydrants, valves, manholes, driveways and roadways.

14. SUBSTITUTIONS

Whenever material or equipment are specified or described in the Contract documents by using the name of a proprietary item or the name of a particular supplier the naming of the item is intended to establish the type, function and quality required. Unless the name is followed by words indicating that no substitution is permitted, materials or equipment of other suppliers may be accepted by Project Manager if sufficient information is submitted by Contractor to allow Project Manager to determine that the material or equipment proposed is an approved alternate to that named. The procedure for review by the Project Manager will include the following as supplemented in the General Requirements. Requests for review of substitute items of material and equipment will not be accepted by Project Manager from anyone other than Contractor. If Contractor wishes to furnish or use a substitute item of material or equipment, Contractor shall make written application to Project Manager for acceptance thereof, certifying that the proposed substitute will perform adequately the functions and achieve the results called for by the general design, be similar and an approved alternate to that specified and be suited to the same use as that specified. The application will state that the evaluation and acceptance of the proposed substitute will not prejudice Contractor's achievement of Substantial Completion on time, whether or not acceptance of the substitute for use in the work will require a change in any of the contract documents (or in the provisions of any other direct contract with City for work on the Project) to adapt the design to the proposed work is subject to payment of any license fee or royalty. All variations of the proposed substitute from that specified will be identified in the application and available maintenance, repair and replacement service will be indicated. The application will also contain an itemized estimate of all costs that will result directly or indirectly from acceptance of such substitute, including costs of redesign and claims of other Contractors; affected by the resulting change, all of which shall be considered by Project Manager in evaluating the proposed substitute. The Project Manager may require Contractor to furnish at Contractor's expense additional data about the proposed substitute.

15. MINIMUM QUALIFICATIONS

The City has established minimum qualifications for Contractor expertise and experience regarding the subject project as follows:

A. The Contractor must provide a minimum of three (3) project references and may provide a maximum of five (5) project references for each of the five (5) criteria listed below.

B. Each project reference must have been successfully completed in the ten (10) years preceding the bid opening.

C. All criteria do not need to be satisfied by each submitted project reference, however, all criteria must have been satisfied two (2) times by the submitted project references.

D. Any project for which references are provided may have been self-performed with Contractor’s employees or performed by a subcontractor who is part of the Contractor’s team for this project.

E. The Contractor qualification requirements include the following:

1. Construction of site work including clearing, grubbing, and fine grading.
2. Construction of flexible and rigid pavement roadways, alleys, and trails.
3. Construction of sidewalk and ADA accessibility improvements.
4. Construction of stormwater utility upgrades.

5. Construction of signal, lighting, and intelligent transportation system (ITS) component upgrades.

[END OF PART I]

PART II: PROGRESS MEETINGS

1. **FREQUENCY**

Progress meetings will be held every other week or less, with the first meeting fourteen (14) days after the pre-construction meeting or fourteen (14) days or less after the date of the Notice to Proceed.

The City has the right to hold called meetings as required by the progress of the work.

2. **ATTENDANCE**

The following people should attend progress meetings, as applicable:

- Project Manager
- City Inspector Contractor
- Subcontractors as appropriate to the Agenda Suppliers as appropriate to the Agenda Others as appropriate

3. **PROGRESS SCHEDULE**

The Contractor shall submit a detailed schedule before work is to be started. It shall indicate the sequence of the work, the time of starting and completing each part.

4. **SUGGESTED AGENDA**

- Review approval of minutes of previous meetings. Review of work progress.

Field observations, problems, and conflicts. Problems which impede the construction schedule. Review of off-site fabrication, delivery schedules.

- Corrective measures and procedures to regain projected schedule, if necessary. Revisions to construction schedule.
- Progress schedule during succeeding work period. Coordination of schedules.
- Review submittal -- expedite as required. Maintenance of quality standards.
- Pending changes and substitutions. Shop drawing submittals.
- Review proposed changes for:
  Effect on construction schedule and on completion date. Effect on other contracts of the project.
  Other business

[END OF PART II]

***P*ART III: TECHNICAL SPECIFICATIONS**

1. GENERAL

Furnish all necessary labor, equipment, and materials to construct various types of public services infrastructure projects as outlined in Part I General Requirements, 1. Introduction.

Tasks may involve milling existing asphaltic concrete surfaces to specified depths. Excess milled material should be transported to an asphalt reprocessing plant. The streets specified should be surfaced with Superpave asphaltic concrete mix. Additionally, tasks include necessary adjustments or replacements of existing structures, traffic control, sweeping, cleanup, placement of painted and thermoplastic pavement markings, and installation of curb, gutter, and sidewalks.

2. MOBILIZATION

A. The Contractor is solely responsible for providing security for all materials stored on- site during the construction activities.
B. The Contractor shall provide ten (10) calendar days notification to the Engineer prior to initiating mobilization to the site and initiating work. The Contractor will also provide copies of all permits that have been obtained to the engineer prior to initiating work associated with such permits.
C. The Contractor shall restrict their operations to the designated work area and ensure that construction activities do not disrupt normal operational activities of the City's services.

D. The Contractor is responsible for visually inspecting the site to note obstructions or access difficulties.

E. The Contractor is responsible for providing and/or maintaining access to the work site to facilitate all construction, inspection and testing activities.

F. The contractor shall deliver/post notifications to affected citizens and business owners seven (7) calendar days prior to construction. A form of the notification must be approved by the City prior to distribution.

3. MILLING

A. Furnish all necessary labor, equipment and materials to mill pavements as specified, and haul the milled material to the reprocessing plant.

B. The methods used for milling shall meet all applicable portions of Section 327 - Milling of Existing Asphalt Pavement, Florida Department of Transportation Standard Specifications for Road and Bridge Construction, latest revision.
C. All manhole castings and water valve boxes shall be adjusted and/or replaced by the Contractor, as specified, after milling is completed.

D. When the full street is required by these documents to be milled, the desired finished cross slope is to be 2%.

E. The unit price per square yard (SY) shall be full compensation for all work required to perform the milling, loading, hauling, sweeping, clean-up, and all incidentals necessary to complete the work specified in this section.

F. Milling of existing asphalt speed humps and speed tables is required as specified in the plans.

4. CONCRETE CURB AND GUTTER (INSTALLATION)

A. All Concrete Curb and Gutter work shall conform to the requirements of Section 520, "Concrete Gutter, Curb elements and Traffic Separator," of the FDOT Standard Specifications and placed in conformity with the lines, grades, dimensions and notes shown in the contract plans.

B. Forms for this work shall be made of either wood or metal and shall have a depth at least equal to the Plan vertical dimensions for the depth of the concrete being deposited against them. They shall be straight and free from warp or bends and of sufficient strength and rigidity, when staked, to resist the pressure of the concrete without deviation from line and grade. If wooden forms are used, they shall be of a cross-section approved by the Project Manager and shall have a flat surface on top. The Contractor shall use flexible forms for all curb and gutter constructed on a radius.

C. Excavation shall be to the required depth, and the foundation material upon which these items are to be placed shall be compacted as specified in Section 120-9, "Compaction Requirements" of the FDOT Standard Specifications.

D. The concrete shall be placed in the forms and tamped and spaded in place so that all honeycombs will be eliminated, and sufficient mortar brought to the surface. The top of the section shall be floated smooth, and its edges rounded to the radius shown on the plans. No concrete shall be placed during unfavorable weather conditions.

E. Except for machine placed concrete, at the option of the Contractor, joints may be formed by the use of dummy joints (either formed or sawed) or by the use of sheet metal templates. If sheet metal templates are used, they shall be at least as long as the depth of the curb section. They shall be set perpendicular to the top and face of the curb form and shall be held firmly in place during the placing of concrete. Templates shall remain in place until the concrete has set sufficiently to hold its shape, but shall be removed while the forms are still in place.

For machine placed concrete, unless an alternate method is approved by the Project Manager, contraction joints shall be sawed. The joints shall be sawed as soon as the concrete has hardened to the degree that excessive raveling will not occur and before uncontrolled shrinkage cracking begins.

Contraction joints shall be spaced at intervals of ten feet (10') except where a lesser interval is required for closure, but no section shall be less than four feet (4') in length. On medians and traffic separators, cuts shall align across from each other. Cuts shall also align with contraction joints of sidewalks adjacent to the curb.

Expansion joints shall be constructed at all structures, at all ends of curb returns, except that expansion joints shall not be constructed within twenty (20) feet of an island nose. They shall be located at intervals of 500 feet between other expansion joints or ends of a run. The expansion joint filler shall be ½ inch in width and shaped to the cross section of the curb.

F. The forms shall be removed within twenty-four (24) hours after the concrete has been placed, and minor defects then filled with mortar composed of one part of Portland cement and two parts of fine aggregate. Plastering will not be permitted on the face of the curb or the gutter. Any rejected curb and gutter shall be removed and replaced at no additional cost to the City. All exposed surfaces shall be given a brush finish while the concrete is still green. For any surface areas, however, which are too rough or where other surface defects make additional finishing necessary, the Project Manager may require that the curb be rubbed to a smooth

surface with a soft brick or wood block, with water used liberally. Also, if necessary further to provide a suitable surface, the Project Manager may require additional rubbing, using a thin grout or mortar, either of which additional rubbing shall be at no additional cost to the City.

G. When surface finishing is completed, the curb and gutter shall be cured per applicable paragraphs of Section 520-8, of the FDOT Standard Specifications.

H. After the concrete has set sufficiently, but not later than three (3) days after pouring, the spaces in front and back of the curb and gutter sections shall be refilled to the required elevation, with suitable material, adequately compacted. In sections where sidewalk is to abut the curb, the backfill shall be placed and compacted to a suitable depth for the placing of sidewalk forms. In all other sections of the work, the back of the curb shall be backfilled to the required elevation with suitable material, which shall be placed and thoroughly compacted in layers of not more than six inches (6") in thickness.

I. Where a base is to be constructed adjacent to a curb and gutter, the curb and gutter shall be properly backfilled and shall set for a period of not less than seven (7) days before any base material is placed against it.

J. The top and face of the finished curb and gutter shall be true and straight, and the top surface of curbs shall be uniform width, free from humps, sags, or other irregularities. When a straightedge ten feet (10') long is laid on the top or face of the curb or on the surface of gutters, the surface shall not vary more than 0.01 foot from the edge of the straightedge, except at grade changes or curves.

K. Full compensation for conforming to the requirements of this Section shall be considered as included in the unit price paid per linear foot (LF) for constructing concrete curb, curb and gutter, or valley gutter, complete in place and accepted, and no additional compensation will be allowed therefore.

5. CONCRETE SIDEWALKS (INSTALLATION)

A. All Concrete Sidewalk work shall conform to the requirements of Section 522, "Concrete Sidewalks and Driveways", of the FDOT Standard Specifications and these Special Provisions and placed in conformity where so ordered by the Project Manager.

B. Forms for this work shall be made of either wood or metal and shall have a depth at least equal to the Plan vertical dimensions for the depth of concrete being deposited against them. They shall be straight, free from warp or bends, and of sufficient strength and rigidity, when staked, to resist the pressure of the concrete without deviation from line and grade. If wooden forms are used, they shall be of cross-section approved by the Project Engineer and shall have a flat surface on top. The Contractor shall use flexible forms for all headers constructed on a radius.

C. Tree roots within the sidewalk area shall be removed to a minimum depth of one foot (1') below the specified subgrade surface. If a contractor must cut tree roots, sharp cuts shall be made. All roots greater than 2” shall be cut clean with a hand saw. The contractor shall hand dig near the roots and saw the roots, heavy mechanical equipment shall not be used. Broken roots shall be sawed 2” behind the ragged end. Roots smaller than 2” may be cut with a sharp-edged hand tool. Crushed or torn roots are more likely to allow decay. Sharply cut roots produce a flush of new roots helping the tree to recover from its injury. If tree roots larger than 6” must be cut, the Contractor shall inform the City Engineer or his representative prior to cutting for field direction. All boulders, organic material, soft clay, spongy material and any

other objectionable material shall be removed and replaced with material approved by the Engineer.

Before placing the forms for sidewalks, the surface upon which they are to be built shall be brought to the specified line, grade and elevation and uniformly compacted to a minimum 85 percent of AASHTO T-99 density. The materials shall be compacted at a moisture content such that the specified density can be uniformly attained. If necessary to attain the specified density, water shall be added to the material, or the moisture content shall be lowered by manipulation or allowing the material to dry, as is appropriate.

Fill areas including cut areas under the sidewalk which have been excavated more than six inches (6") below the bottom of sidewalk shall be compacted to a minimum of 95 percent of AASHTO T-99 density. The area to be compacted is defined as that area directly under the sidewalk and one foot (1') beyond each side of the sidewalk when right-of-way allows.

D. Transverse expansion joints shall be placed at intervals not exceeding eighty feet (80'), and at all places where a walk intersects or abuts a curb, driveway, building, other sidewalk or fixed objects. Expansion joints shall be constructed at each side of structures and at ends of curb returns, except that expansion joints shall not be constructed within twenty feet (20') of an island nose. Expansion joints shall be filled with ½ inch thick premolded joint filler conforming to the provisions in Section 932 of the Standard Specifications. The joint filler shall be shaped to the cross section of the sidewalk, shall extend from the surface to the subgrade, and shall be at right angles to the sidewalk surface.

   Contraction joints shall be sawed and shall be at intervals of four (4) to six (6) feet, or as shown on the plans. A slot approximately 3/16 inches wide and not less than 1 ½ inches deep shall be cut with a concrete saw after the concrete has set, and within twenty-four (24) hours of concrete being poured. Open type joints shall not be allowed.

E. Just prior to placing the concrete, the subgrade shall be moistened. The concrete shall be placed in the forms and tamped and spaded in place so that all honeycombs will be eliminated and sufficient mortar brought to the surface. Thereafter, the surface shall be brought to a smooth even finish by means of a wooden float. No concrete shall be poured during unfavorable weather conditions.

F. The concrete shall be given a broom finish. The top of the finished sidewalk shall be true and straight, and the top surface of sidewalks shall be uniform width, free from humps, sags, or other irregularities. When a straightedge ten feet (10') long is laid on the top of the sidewalk the surface shall not vary more than 0.01 foot from the edge of the straightedge, except at grade changes or curves.

G. When surface finishing is completed, the sidewalk shall be cured per applicable paragraphs of Section 520-8, of the Standard Specifications. After concrete has set sufficiently, but no later than three (3) calendar days after pouring, the space alongside the sidewalk shall be backfilled, compacted and sodded or seeded as shown on the striping plans.

H. Full compensation for conforming to the requirements of this Section shall be considered as included in the unit price paid per Square Yard for constructing sidewalks, complete in place and accepted, and no additional compensation will be allowed therefore.

6. LEVELING/RESURFACING

A. **Material:**

1. The material used for leveling shall be Superpave asphaltic concrete.

2. The material used for resurfacing shall be Superpave asphaltic concrete. Friction Course mixes may be used as specified by the City Project Manager.

B. **Construction Requirements:**

1. The leveling and resurfacing shall commence within three (3) working days after the milling of each street. The time limit for streets where castings or other water valve boxes need to be adjusted or replaced will be three (3) working days after the casting or water valve box has been adjusted or replaced.

2. The methods used for re-paving shall meet all applicable portions of Section 330 - Hot Mix Asphalt General Construction Requirements, Florida Department of Transportation Standard Specifications for Road and Bridge Construction, latest revision.
3. The Contractor shall contact all utility and TV cable companies for location of their facilities. The exact location of their facilities, type of material used by the utility and TV cable, etc. shall be determined by the Contractor prior to any excavation work required by this Contract.

4. The Contractor shall be responsible for the protection of all pavements, sidewalks, and other improvements within the work area. All damage to such improvements, as a result of the Contractor's operations, beyond the limits of the work of pavement replacement as described herein, shall be repaired by the Contractor at the Contractor's expense.

5. Testing by City: Testing may be completed by an independent testing laboratory. If core borings are done to determine thickness and density, the Contractor is responsible for filling these holes in the pavement.

C. **Quality Control:**

1. The Contractor shall have a Quality Control Technician who has been certified by the State of Florida Department of Transportation as a Certified Asphalt Plant Technician, available at the asphalt plant at all times the Contractor is producing asphalt mix for use on this project.

2. The Contractor's quality control procedures, inspection and tests shall be documented, and that information shall be available for review by the Project Manager or his representative, throughout the course of the Contract.

3. The mix design shall meet the requirements of Section 334-3.2 for the type of Superpave asphalt indicated in the plans as set forth in Florida Department of Transportation Standard Specifications for Road and Bridge Construction, latest revision. Friction course asphalt concrete must meet the requirements of Section 337 for the type of friction course indicated in the plans. Submit a Notarized Certification of Specification Compliance letter on company letterhead to the Engineer stating that all material produced and placed on the project was in substantial compliance with the specifications. The City may run independent tests during the project to determine the acceptability of the material.

7. UTILITY ADJUSTMENTS & REPLACEMENTS

A. **Adjusting Existing City Valve Boxes:**

1. The Contractor is to provide the necessary equipment to adjust the castings without damaging the existing structure. Adjustment would include being able to screw the top portion of the valve box up or down. Water valves that cannot be adjusted either up or down must be replaced under Section 6.2. If the structure is damaged, the Contractor is to replace the structure to its original condition at their cost.

2. The materials and construction methods for this work shall conform to applicable portions of Section 425 Inlets, Manholes and Junction Boxes, Florida Department of Transportation Standard Specifications for Road and Bridge Construction, latest revision.

3. The quantities to be paid for under this section shall be for the number of valve boxes, adjusted physically.

4. Structures, sections of structures, valve box sections or other items necessary for adjustment that are considered debris and that has been removed by the Contractor as part of the progress of work shall be removed from the project site by the Contractor at the end of each day's work. The Contractor is to remove all debris deposited in the structure as a result of the work performed.

B. **Castings:**

1. The Contractor shall notify the Project Manager or his representative on any questions regarding the prior adjustment or replacement of manhole frames or valve boxes.

2. Manhole frame and covers and valve boxes to be replaced are to be furnished by the Contractor.

3. Castings damaged by construction shall be replaced at no additional cost to the City of St Pete Beach.
4. All castings shall be adjusted and replaced in accordance with the manufacturers recommended requirements.

5. Adjusted or replaced castings shall be set at the grade of the proposed asphalt after compaction with not more than ¼" variation in 10 feet.

8. STRIPING AND MARKINGS

A. **Temporary Striping**: Temporary traffic stripes and markings will be required. Temporary markings shall be placed immediately after milling on any arterial/collector roads or within the immediate proximity of a school, and immediately after final asphalt on all roads. Before opening any re-paved area to traffic, temporary markings shall be applied as specified by the Project Manager. The paint used for this work shall be in accordance with the FDOT specification.

B. **Permanent Striping**: The Contractor shall place permanent traffic stripes and markings in accordance with reference points and alignment gathered by the Contractor prior to milling or overlay or in accordance with striping plans provided by the City of St Pete Beach. The Contractor shall use an Alkyd/Maleic thermoplastic compound and application methods meeting the requirements of Section 711 – Thermoplastic Pavement Markings, Florida Department of Transportation Standard Specifications for Road and Bridge Construction, latest revision. The thermoplastic compound shall be extruded on the pavement surface in a molten state by mechanical means with surface application of glass spheres, and upon cooling

to ambient pavement temperature shall produce an adherent pavement marking of the specified thickness and width and capable of resisting deformation.

C. A minimum of 21 days curing time after asphalt placement shall be allowed before the placement of any thermoplastic marking commences, with all thermoplastic markings to be completed within 28 days after asphalt placement.

D. The color of the thermoplastic shall be white, yellow, or blue as specified by the M.U.T.C.D.; and revisions thereof.

9. CLEANUP AND DUST CONTROL

A. The Contractor shall furnish and operate a minimum of one (1) mechanical sweeper for the purpose of removal of loose milled material. After milling and before resurfacing, the Contractor shall water the streets as necessary to prevent dust nuisance from his operations or from traffic.

B. Upon completion of the work on each street and before acceptance, the Contractor shall remove all surplus and discard materials and rubbish; shall restore in an acceptable manner all property, both public and private, which has been damaged during the prosecution of the work and shall leave each street in a neat and presentable condition throughout the entire length of the work under Contract. This shall include, but not be limited to the overspray of tack, and shall be completed within one (1) week after the resurfacing of each street.

C. Failure of the Contractor to comply with the Project Manager cleanup orders may result in an order to suspend work until the condition is corrected. No additional compensation will be allowed as a result of such suspension.

D. 5% of the value of the work performed may be retained, should at the opinion of the City, restoration not be completed.

E. The cost of all work regarding Cleanup and Dust Control shall be included in the prices for other pay items, which are included in the Contract.

F. The Contractor shall reflect in the schedule, which shall be approved prior to construction, the time required for complete restoration. The Contractor shall strictly adhere to the schedule.

G. The Contractor shall take the necessary measures to prevent siltation and other construction related materials including tack coatings from entering storm inlet structures and manhole structures during the road repaving operation.

10. TRAFFIC CONTROL, STREET CLOSURES, DETOURS AND BARRICADES

A. The Contractor shall comply with all applicable portions of Section 102 – Maintenance of Traffic – Florida Department of Transportation Standard Specifications for Road and Bridge Construction, latest revision, and City requirements for traffic control.

B. The Contractor shall furnish all necessary barriers, lights, signs, and flag persons, to advise the public of detours and construction hazards. All flag persons on site shall be properly qualified.

C. The Contractor shall be responsible for compliance with additional public safety requirements, which may be ordered by the Project Manager or his authorized representative.

D. Failure of the Contractor to comply with the public safety requirements may result in an order to suspend work until the condition is corrected. No additional compensation will be allowed as a result of such suspension.

E. The Contractor shall furnish and install, and upon completion of the work, promptly remove all signs and warning devices.

11. SODDING

A. **Description:** All sodding shall conform to the requirements of Section 570, FDOT Manual on Road and Bridge Construction, latest revision.

B. **Materials:**

1. **Sod:** Sod shall be Argentine Bahia as determined by the Project Engineer. Where sodding will adjoin, or be in sufficiently close proximity to, private lawns, other types of sod may be used if desired by the affected property owners and approved by the Project Engineer. The sod shall be taken up in commercial-size rectangles, preferably 12-inch by 24-inch or larger. Maximum allowable deviation from the standard widths and lengths shall be five percent (5%). Broken pads and torn or uneven ends will not be acceptable. The sod shall be sufficiently thick to secure a dense stand of live grass. The sod shall be live, fresh and uninjured, at the time of planting. It shall have a uniform soil thickness of three-fourths inch (3/4"), plus or minus one-fourth inch (1/4"), at the time of cutting. Measurement for thickness shall exclude top growth and thatch. The soil mat shall adhere firmly to the roots such that it will not break, crumble, or tear during handling and placing. No muck or heavy peat soil grown sod will be accepted. All sod shall be 97% free of weeds and other grasses. All sod shall comply with State and Federal laws with respect to inspection for plant diseases and insect infestation. An inspection certificate, required by law, may be requested by the Project Engineer for each shipment. All sod shall be placed as soon as possible after being dug and shall be shaded and kept moist from the time it is dug until it is planted. No sod which has been cut for more than 48 hours may be used unless specifically authorized by the Project Engineer.

2. **Commercial Fertilizer:** All commercial fertilizers shall comply with the State fertilizer laws. All fertilizers shall be uniform in composition, free flowing and suitable for application by mechanical spreader equipment. The chemical designation of the fertilizer shall be 12-8-8 or equivalent ratio. At least 50% of the phosphoric acid shall be from normal super phosphate or an equivalent source which will provide a minimum of two units of sulfur. The amount of sulfur shall be indicated on the quantitative analysis card attached to each bag or other container.

3. **Water:** The water may be obtained from any approved spring, pond, lake, stream or municipal water system. The water shall be free of excessive and harmful chemicals, acids, alkalies, or any substance which might be harmful to plant growth or obnoxious to traffic. Salt water shall not be used. The Contractor shall pay for all water used for the installation of sod.

C. **Construction Methods:**

1. **Soil Moisture:** Rough and fine grading shall be carefully executed to ensure that the final placed sod will conform to existing grades, free of depressions, “bird baths” or

bumps. The area on which sod is to be placed shall contain sufficient moisture for optimum results. During periods of high temperature and after all unevenness in the soil surface has been corrected, the soil shall be lightly irrigated immediately prior to laying the sod. Muddy soil shall not be created.

2. **Placing Sod:** The first row of sod shall be laid in a straight line with subsequent rows placed parallel to and tightly against each other. Lateral joints shall be staggered to promote more uniform growth and strength. Care shall be exercised to ensure that the sod is not stretched or overlapped and that all joints are butted tight in order to prevent voids which would cause air drying of the roots. The sod shall form a solid mass. The sod shall be firmly embedded by light tampering and rolling to ensure contact with the subgrade and to provide a smooth, even surface to eliminate voids under the root system making dry spots. The sod shall be staked on all slopes of 2:1 or steeper with pegs or similar material, driven through the sod blocks, six inches (6") into firm earth at suitable intervals.

3. **Watering:** The sod shall be watered with a fine spray immediately after placing, such that the underside of the new sod pad and soil immediately below the sod are thoroughly wet. The sod shall be kept in moist condition for the duration of the contract period (and in no case less than 4 weeks except in dry season it shall be 8 weeks). The moistened condition shall extend to at least to the full depth of the rooting zone. Water shall not be applied between the hours of 10:00 a.m. and 6:00 p.m.

D. **Maintenance:** The Contractor shall, at no additional expense to the City, maintain the sodded areas in a satisfactory condition until final acceptance of the project. Such maintenance shall include the filling, leveling, and repairing of any washed or eroded areas, as deemed necessary by the Project Engineer. The Project Engineer, at any time, may require resodding of any areas in which the establishment of the grass stand does not appear to be developing satisfactorily. The Contractor shall mow lawns as soon as there is enough top growth to cut with mower set at height of two inches (2") and shall repeat mowing as required throughout the duration of the project, to maintain such height. The Contractor shall not delay mowing until grass blades bend over and become matted and shall not mow when grass is wet.

E. **Measurement and Payment:** Full compensation for conforming to the requirements of this Section shall be considered as included in the unit price paid per square yard (SY) for furnishing, placing, maintaining and replacing sod, complete in place and accepted, and no additional compensation will be allowed therefore.

[END OF PART III]

SECTION 01425
FDOT STANDARDS REFERENCE

PART 1 GENERAL

1.01 Section Includes

Instruction on the use and applicability of FDOT standards on the project

1.02 Requirements

A. The Florida Department of Transportation, Standard Specifications for Road and Bridge Construction, latest non-metric edition ("Standard Specifications"), and Standard Plans for Road Construction, latest non-metric edition ("Standard Plans") are referenced herein as source documents for applicable technical specifications and construction details to be used in the construction of this project. The term “latest edition” refers to the latest edition implemented by FDOT and includes all FDOT implemented supplements at the time of bid advertisement.

B. Method of Measurement and Basis of Payment is to be in accordance with the Florida Department of Transportation Standard Specifications. Any item which is detailed in the Plans and for which material types, sizes and quality are also called out, the "Standard Plans" shall take preference over the plan detail unless otherwise directed by the Engineer.

C. Where the FDOT Standard Specifications use the reference "Department", replace "Department" with "Owner", except for when such reference is to Department Standards and evaluation criteria.

D. The Standard Plans are referenced herein as a source document for applicable construction items and details called for in the plans for which a specific plan detail is not provided. The Contractor shall construct the items called for in the plans in accordance with the "Standard Plans" unless otherwise defined or detailed in the plans or as directed by the Owner, Engineer or authorized representative.

E. The Standard Plans are available for download from the FDOT website at: https://www.fdot.gov/design/standardplans

F. In case of conflict, the Technical Specifications takes precedence over FDOT specifications for a particular construction requirement.

G. Copies of the latest implemented edition and implemented supplements of the Florida Department of Transportation Standard Specifications are available for download from the FDOT website at: https://www.fdot.gov/programmanagement/Implemented/SpecBooks

H. The Contractor shall inform the Owner and Engineer in writing of any specification that the Contractor feels is ambiguous or conflicting with other plan notes and details prior to the construction of the associated item. The Engineer will determine which information is to be used for construction. The Contractor is responsible for the removal and replacement of any item improperly constructed resulting from a misinterpretation of the specifications at no additional cost to the Owner.

PART 2 PRODUCTS - Not Used

PART 3 EXECUTION

3.01 General

The Contractor shall use Divisions Two (II) and Three (III) of the FDOT Specifications as they relate to methods of construction and material types and quality for the appropriate construction items contained within this project.

END OF SECTION

III. BID FORM

See attached Excel document.

IV. GENERAL CONTRACT TERMS

REQUEST FOR PROPOSALS
Civil On Call Construction Services

REQUEST FOR PROPOSAL SUMMARY
The City of St Pete Beach has issued this Request for Proposal (RFP) to solicit competitive bids and proposals from Proposers for a Task Work Order driven Civil On-Call Construction Services Contract. The successful bidder shall provide all labor, materials, equipment, tools, consumables, transportation, and incidentals to provide Public Services capital improvement projects construction services on an 'as needed' basis for the City of St Pete Beach.

The "City" intends to **award multiple contracts** to vendors who can provide the best value for services. Vendors may submit proposals for all, some, or only one of the requested line items or categories. **It is not mandatory to submit a proposal for every item listed**. A bidder may bid on any, all, or none of the items. The "City" reserves the right to select multiple vendors to optimize cost-efficiency and capability across different segments of the project. Proposals will be evaluated based on capability, cost, and capacity to perform the specific line items requested.

PROPOSAL SUBMITTALS
Proposal documents must include a signed/notarized Contractor's Proposal Submittal, Bid Form, References, Contractor's license and insurance certificates, and Public Entity Criminal Affidavit. The Contractor shall submit electronic proposals only. Bidders must submit electronically only through Bonfire platform. When bidding electronically, only one copy should be submitted.

Proposals shall include the following:

- A signed and notarized Proposer's Contract Proposal.
- Current proof of insurance certificate.
- A list of references and minimum qualifications as outlined in Section V.
- One copy of bid electronically submitted to Bonfire platform.

The City is not responsible for any Addendums or other supplementary information that is not received due to non-submittal of the aforementioned information. Please refer back to the city website (http://www.stpetebeach.org/news-and-links/city-projects.html) for additional project information as it becomes available. The City reserves the right to decide whether to answer addendums or not. The City is not required to provide any additional information.

Proposers or persons wishing to submit a proposal on this project shall be licensed, and insured in accordance with the City's requirements

The City of St. Pete Beach reserves the right to reject any or all proposals or parts of proposals, or accept any proposal or part thereof deemed to be in the best interests to the City of St. Pete Beach.

Electronic proposals must be submitted by **9:00 AM on April 08, 2026 (Deadline),** clearly marked as: **"Civil On Call Construction Services."**

PRE-PROPOSAL MEETING
An optional pre-proposal meeting will be held on **March 18, 2026 at 10:00 AM EST** via Microsoft Teams conference/Teleconference. Please contact the City's Procurement Manager (purchasing@stpetebeach.org) for a meeting invitation and instructions.

WRITTEN REQUESTS FOR INTERPRETATIONS/CLARIFICATIONS
No oral interpretations will be made to any firms as to the meaning of the scope of work or any other

contract documents included in this **RFP.** All questions pertaining to the terms and conditions or scope of work of this Request for Proposal **(RFP)** must be sent in writing via email only to the City Procurement Manager (purchasing@stpetebeach.org) and shall be received no later than **10:00 AM EST on March 25, 2026.** Responses to questions may be handled as an Addendum if the response would provide clarification to the requirements of the **RFP**. All such Addenda shall become a part of the contract documents. The City will not be responsible for any other explanation or interpretation of the proposed **RFP** made or given prior to the award of the contract. The City will not respond to questions received after the specified deadline. The City reserves the right to respond to any and all questions but is not required to do so. If the Proposer discovered the opportunity through the online platform (Bonfire), do not submit questions through these platforms. **Only questions emailed directly to the City Procurement Manager will be answered.**

BEGINNING DATE
The Proposer shall, within ten (10) business days after receipt of the Notice of Award and before commencement of any operations hereunder, execute the Agreement. Additionally, the Proposer shall, within twenty (20) business days after receipt of the Notice of Award, provide all required documentation to the City.

COMPLETION OF WORK
The work will be completed on an as-needed basis. Each location that needs to be surveyed, repaired and/or worked on will constitute it's own "job". This will be a three (3) year initial contract with the option to be extended for two (2) additional one (1) year periods upon mutual consent of both parties. It is the intent of the City of St Pete Beach to award these services to more than one Contractor/Vendor.

COSTS INCURRED BY PROPOSERS
All expenses involved with the preparation and submission of proposals to the City, or any work performed in connection therewith, shall be borne solely by the Proposers. No payment will be made for any responses received or for any other effort required of or made by; the Proposer's prior to contract commencement.

ORAL PRESENTATION
The City may require an oral presentation of the proposal at the Evaluation Committee's discretion. This could also include a formal interview of any and all members of the Proposer's contract management staff.

CONFLICT OF INTEREST
The Proposer represents that it presently has no interest and shall acquire no interest, either direct or indirect, which would conflict in any manner with the performance or services required hereunder, as provided for in FL Stat. 112.311. The Proposer further represents that no person having any interest shall be employed for said performance.

The Proposer shall promptly notify the City's representative, in writing, by certified mail, of all potential conflicts of interest for any prospective business association, interest, or other circumstance, which may influence or appear to influence the contractor's judgment or quality of services being provided hereunder. Such written notification shall identify the prospective business association, interest or circumstance, the nature of work that the Proposer may undertake and request an opinion of the city as to whether the association, interest or circumstance would, in the opinion of the City, constitute a conflict of interest if entered into by the Proposer. The City agrees to notify the Proposer of its opinion by certified mail within thirty days of receipt of notification by the Proposer.

LATE PROPOSAL OR MODIFICATIONS
Modifications in writing received prior to the time set for the proposal submittal will be accepted. Proposal modifications received after the time set for the proposal submittal will not be considered.

RELATED PARTIES AND MULTIPLE PROPOSALS

Where two (2) or more related parties each submit a proposal or multiple proposals are received from (1) Proposer, for any such contract, such proposals shall be judged non-responsive. Related parties mean Proposers or the principles thereof, which have a direct or indirect ownership interest in another Proposer for the same contract or in which a parent company or the principles thereof where one (1) Proposer has a direct ownership interest in another Proposer for the same contract.

RIGHT TO AUDIT
The City of St. Pete Beach reserves the privilege of auditing a Proposer's record as such records relate to purchases or work between the City and said Proposer. Records should be maintained for three years from contract date.

VARIANCE FROM STANDARD TERMS & CONDITIONS
All standard terms and conditions stated throughout the RFP apply to this contract except as specifically stated. This should be fully understood by Proposers prior to submitting a proposal.

ASSIGNMENT
The Proposer shall perform this contract. No assignment or subcontracting shall be allowed without prior written consent of the City. If a Proposer intends to subcontract a portion of this work, the Proposer must disclose that intent in the proposal. In the event of a corporate acquisition and/or merger, the Contractor shall provide written notice to the City within thirty (30) business days of Proposer's notice of such action or upon the occurrence of said action, whichever occurs first. The right to terminate this contract, which shall not be unreasonably exercised by the City shall include but not be limited to, instances in which a corporate acquisition and/or merger represent a conflict of interest or are contrary to any local, state, or federal laws. Action by the City awarding a proposal to a firm that has disclosed its intent to assign or subcontract in its response to the RFP, without exception shall constitute approval for purpose of this Agreement.

LOBBYING Lobbying of Evaluation Committee members, City employees, or elected officials regarding request for proposals, request for qualifications, bids or contracts, during the pendency of bid award or bid protest, by the bidder/proposer/protestor or any member of the bidder's/proposer's/protestor's staff, an agent of the bidder/proposer/protestor, or any person employed by any legal entity affiliated with representing an organization that is responding to the request for proposal, request for qualification, bid or contract, or has a pending bid protest is strictly prohibited either upon advertisement or on a date established by the City and shall be prohibited until either an award is final or the protest is finally resolved by the City Manager or Procurement Manager; provided, however, nothing herein shall prohibit a prospective bidder/proposer from contacting City departments to address situations such as clarification and/or questions related to the procurement process. For purposes of this provision, lobbying activities shall include but not be limited to, influencing or attempting to influence action or non-action in connection with any requests for proposal, request for qualification, bid or contract through direct or indirect oral or written communication or an attempt to obtain goodwill of persons and/or entities specified in this provision. Such actions may cause any request for proposal, request for qualification, bid or contract to be rejected.

ADDITIONAL REQUIREMENTS
The City reserves the right, by change order, to unilaterally add or delete locations/services, either collectively or individually, at the City's sole option, at any time after award has been made as may be deemed necessary or in the best interest of the City. In such case, the Proposer will be required to provide or reduce services to this contract in accordance with the terms, conditions, and specifications.

SERVICES AGREEMENT
A written agreement incorporating the RFP and the successful proposal will be prepared by the City, signed by the successful Proposer, and presented to the City Commission for approval and signature.

INTEGRITY OF REQUEST FOR PROPOSAL DOCUMENTS
Proposers shall use the original RFP forms provided within the RFP and enter information in the spaces where a response is requested. Proposers may use an attachment as an addendum to the RFP forms if sufficient space is not available on the original form for the Proposer to enter a complete response. Any modifications or alterations to the original RFP documents by the Proposer, whether intentional or otherwise, will constitute grounds for rejection of the RFP. Any such modifications or alterations a Proposer wishes to propose must clearly be stated in the Proposer's RFP response and presented in the form of an addendum to the original RFP documents.

RESPONSIBILITY OF THE CITY MANAGER OR DESIGNEE
The term "City Manager or designee" wherever used in this Contract shall be the City of St. Pete Beach or its duly authorized representative. Notices of any change in the City Manager or designee shall be given in writing by the City to the Contractor. The City Manager or designee shall have full authority to interpret the contract and requirements and shall determine acceptance of the work under this Contract and every question relative to the fulfillment of the terms and provisions therein. It shall be the duty of the City Manager or designee to enforce the contract terms in a fair and unbiased manner.
If a variation from any requirements is allowed, the City Manager or designee shall grant the same in writing with the reasons for his action outlined, and such action will not invalidate or change the Contract in any other manner.

EXAMINATION OF SITE
Proposer shall carefully examine project site and be familiar with the work required for the project, investigate all site conditions that may affect execution of work as detailed in the construction documents. Contact the City's Procurement Manager or their designee for changes or alterations before proceeding.

ASSURANCES
The responding Proposer shall provide a statement of assurance that the Proposer is not presently in violation of any statutes or regulatory rules that might have an impact on the firm's operations. All applicable laws and regulations of the State of Florida, and ordinances and regulations of the City of St. Pete Beach will apply.

ASSIGNMENT AND TRANSFER OF CONTRACT
The Proposer shall not assign or transfer this Agreement or any part thereof or any interest therein without consent in writing of the City and the Proposer's Surety, and any such assignment or transfer without such written consent shall be null and void.

SUBCONTRACTS
The Proposer shall not subcontract this Agreement or any part thereof or any interest therein without consent in writing of the City and the Proposer's Surety. Any Subcontractor approved by the City will be subject to the same standards and qualifications as stated in this Contract.

PAYMENT
Payment shall be made to the Proposer for work performed under this Contract for the quantities of work as determined in accordance with Payments for Work Completed and Payments Withheld of this Contract. Payment for extra work will be made in accordance with the Changes in Work, Contract Amount, and Contract Time sections below.

PERIOD OF PERFORMANCE
The target completion for the base Scope of Services is January 2027, corresponding to delivery of the Design-Build Readiness Package. The City reserves the right, at its sole discretion and subject to funding

availability, to amend this Agreement to extend the Consultant's services through final (100%) design. Any additional services shall be authorized by written amendment and negotiated in accordance with the Consultants' Competitive Negotiation Act (Section 287.055, Florida Statutes).

CHANGES IN THE WORK

Without invalidating the Contract, the City may, at any time or from time to time, order additions, deletions or revisions in the work authorized by written Change Orders or directives. Upon receipt of a Change Order, the Proposer will proceed with the work involved. All such work shall be executed under the applicable conditions of the Contract documents. If any Change Order causes an increase or decrease in the Contract Amount or any extension or shortening of the Contract Time, an equitable adjustment will be made.

Additional Work performed by the Proposer without authorization of a Change Order will not entitle them to an increase in the Contract Amount or any extension of the Contract Time, except in the case of an emergency (subject to approval by City Manager or designee).

It is the Proposer's responsibility to notify their Surety of any changes affecting the general scope of the Work or change of the Contract Amount and the amount of the applicable bonds shall be adjusted accordingly, and an amended bond document furnished to the City. In the event the City directs the Proposer to make a change in the Work, and if the City and the Proposer do not arrive at a mutually acceptable increase or decrease in the Contract Amount, the Proposer shall not use any such lack of mutual acceptance as a basis or cause to stop or otherwise delay the progress or the execution and completion of any of the work ordered, directed or required pursuant to the Contract Documents.

If the Proposer believes an event or situation has occurred which justifies a change in the Contract Amount or Contract Time, they shall deliver a written notice to the City Manager or designee. Each such written notice shall be delivered promptly and no later than fifteen (15) business days after the Proposer first discovered the occurrence. The Proposer shall be deemed to have waived the right to collect any and all costs incurred more than fifteen (15) business days prior to the date of delivery of the written notice and shall be deemed to have waived the right to seek an extension of the Contract Time with respect to any delay in the Progress Schedule which accrued more than fifteen (15) business days prior to the date of delivery of the written notice.

Any such notice shall include sufficient detail to explain the basis of entitlement to a claim for an adjustment to the Contract Amount of Contract Time. When requested by the City Manager or designee, the Proposer shall furnish any additional information and details as may be required to determine the facts or allegations involved, which shall be provided within fifteen (15) business days of the request unless a longer time period is allowed by the City Manager or designee.

The Proposer shall prepare proposals detailing proposed adjustments to Contract Amount and/or Contract Time and submit them to the City Manager or designee within fifteen (15) business days of the City's issuance of a proposed Change Order or the Proposer's submitting a written notice of a change or claim for an adjustment to the Contract Amount or Contract Time. Proposer's proposals shall be irrevocable for a period of at least sixty (60) business days after receipt by the City. Any delay in the submittal of a complete, adequate and acceptable proposal will not justify an increase in Contract Amount or Contract Time. Proposer agrees that it shall give the City access to any and all of Proposer's and Subcontractors' books, records and other materials relating to proposed Change Orders and other claims for adjustment to Contract Amount or Contract Time.

CHANGE OF CONTRACT AMOUNT

The Contract Amount constitutes the total compensation payable to the Proposer for performing the Work. All duties, responsibilities and obligations assigned to or undertaken by the Proposer shall be at his expense

without change in the Contract Amount. The Contract Amount may only be changed by written Change Order issued by the City. Any claim for an increase in the Contract Amount shall be in writing and delivered to the City Manager or designee within fifteen (15) business days of the occurrence of the event giving rise to the claim.

All claims for adjustment in the Contract Amount shall be determined by the City Manager or designee. However, no claim for an adjustment to the Contract Amount will be considered for unforeseeable causes that were beyond the fault or negligence of the Proposer or his Subcontractors or supplier such as acts of God, floods, riots, etc. This restriction does not restrict submission of claims for additional Contract Time due to events of this nature. Any change in the Contract Amount shall be incorporated in a Change Order.

Proposer proposals or claims shall cover all aspects of the Work involved and shall be fully documented and itemized as to all costs, quantities and charges for overhead and profit. Amounts for Subcontractors or Suppliers at any tier shall be similarly supported. When determining Subcontractors' costs, the methods to be used shall be those used for the Proposer's costs, except that the term "Subcontractor" shall replace the term "Proposer," context permitting.

The value of any Work covered by a Change Order or of any claim for an increase or decrease in the Contract Amount where the Work involved is covered by unit prices contained in the Contract Documents shall be determined by application of unit prices to the quantities of the items involved. If the quantities originally contemplated are so changed in a proposed Change Order, that application of the Unit Prices to the quantities proposed will cause substantial inequity to the City or the Proposer, the applicable unit price(s) shall be equitably adjusted by mutual agreement.

If the value of work covered by a Change Order cannot be established or mutually agreed to utilizing previously established unit rates, the value shall be determined by the City on the basis of an estimate of the out-of-pocket cost and percentages that are acceptable to the City for overhead and profit.

In such case, the Proposer will submit in the form prescribed by the City an itemized cost breakdown together with supporting data.

The amount of credit to be allowed by the Proposer to the City for any such change which results in a net decrease in cost, will be the amount of the actual net decrease as determined by the City. When both additions and credits are involved in any one change, the combined overhead and profit shall be figured on the basis of the net increase, if any.

CHANGE OF CONTRACT TIME

The Contract Time may only be changed by written Change Order. Any claim for an extension in the Contract Time shall be in writing and include an analysis of the Progress Schedule as further described in the Specifications and shall be delivered to the City Manager or designee within fifteen (15) business days of the occurrence of the event giving rise to the claim. All claims for adjustment in the Contract Time shall be determined by the City Manager or designee. Any change in the Contract Time resulting from any such claim shall be incorporated in a Change Order. The Contract Time may be extended for an amount equal to time lost due to unforeseeable causes beyond the control of the Proposer (and his Subcontractors and Suppliers) if he makes a claim therefrom. Such delays shall include, but not be restricted to, acts or neglect by any separate Proposer employed by the City; fires; floods; labor disputes; epidemics; or acts of God.

All time limits stated in the Contract Documents are of the essence to the Contract. The stated time limits are agreed to be adequate to complete the work, including the procurement, manufacture and delivery of all material and equipment required, and account for any and all potential impact, delays, disruptions and costs that may be expected.

PAYMENTS FOR WORK COMPLETED
All payments under this agreement shall comply with the requirements of Florida Statutes, Section 215.422, commonly referred to as the "Prompt Payment Law." This includes timely processing of invoices and adherence to statutory interest provisions for late payments. The Contractor shall submit detailed invoices for services rendered under this agreement. Each invoice must include: Purchase Order or Contract Number, Description of services provided, Dates of service, Total amount due. Payment will be made within 45 days of receipt of a proper invoice and acceptance of deliverables, as required by Florida law. If payment is not made within the statutory timeframe, interest penalties will apply in accordance with Section 215.422, Florida Statutes. Payments will be issued via electronic funds transfer (EFT) unless otherwise agreed in writing. Contractor must provide accurate banking information to facilitate EFT.

PAYMENTS WITHHELD
The City Manager or designee may withhold, or, on account of subsequently discovered evidence, nullify the whole or part of any estimate to such extent as may be necessary to protect the City from loss on account of:

a) Defective work not remedied

b) Claims and/or liens filed or reasonable evidence indicating probable filing of claims

c) Failure of the Proposer to make payments properly to Subcontractors or for labor

d) A reasonable doubt that the Contract can be completed for the balance then unpaid

e) Damage to another Proposer

f) Failure of the Proposer to keep their work progressing in accordance with their time schedule

FINAL PAYMENTS
Upon the completion and acceptance of the work, the City Manager or designee shall issue a certificate that designates that the whole work provided for in this Contract has been completed and accepted by him under the conditions and the terms thereof and shall make the final estimate of the work. After issuance of the certificate, the entire balance found to be due the Proposer, including said retained percentage by the City in accordance with existing state laws as may be retained lawfully by said City, shall pay excepting such sums to the Proposer.

Before the approval of the final payment, the Proposer shall submit evidence satisfactory to the City that states that all payrolls, materials, bills and outstanding indebtedness in connection with this Contract have been paid.

LIENS
If at any time there shall be evidence of any lien or claim for which the City might become liable and which is chargeable to the Proposer, the City shall have the right to retain out of any payment then due or thereafter to become due, an amount sufficient for complete indemnification against such lien or claim. In the event the City has already paid to the Proposer all sums due under this contract or the balance remaining unpaid is insufficient to protect the City, the Proposer and his Surety shall be liable to the City for any loss so sustained.

RESPONSIBILITY OF THE CITY MANAGER OR DESIGNEE
The term "City Manager or designee" wherever used in the Contract shall be the City of St. Pete Beach or its duly authorized representative. Notices of any change in the City Manager or designee shall be given in writing by the City to the Proposer. The City Manager or designee shall have full authority to interpret the Plans and Specifications and shall determine the amount, quality, and acceptance of the work and supplies

to be paid for under the Contract and every question relative to the fulfillment of the terms and provisions therein. It shall be the duty of the City Manager or designee to enforce the Plans and Specifications in a fair and unbiased manner. If a variation from any requirements is allowed the City Manager or designee shall grant the same in writing with the reasons for his action outlined, and such action will not invalidate or change the Contract in any other manner.

LICENSES AND PERMITS

The Proposer shall obtain and pay for all necessary City licenses and work permits and shall faithfully comply with all laws, ordinances and regulations, (Federal, State or local) which may be applicable to the operations to be conducted hereunder, except for those permits obtained by the City. Notwithstanding the provisions above, the Proposer is responsible for non-compliance of all permit requirements, including all fines resulting from Proposer's non-compliance of said requirements.

Chapter II, Section II-4, "Registration of Licenses Obtained From Other Municipalities:" "Persons, partnerships, corporations, or other business entities doing business with the City who are not required to obtain a City occupational license, but who must have either a State or County or Municipal occupational license from another municipality, shall register such occupational license with St. Pete Beach Community Development Department. The City may charge a fee for such registration." The Proposer shall be responsible for obtaining all City, County, State and Federal permits required by those government agencies and must provide documentation of receipt of those permits prior to project commencement. This shall include a notice to commence work letter and the applicable fee, if required. Any sub-contractor hired by the Proposer awarded the project, MUST also register their license with the City.

LABOR PROVISIONS

The Proposer and his Subcontractors shall discharge, whenever ordered to do so by the City Manager or designee, any employee who is disorderly or whose conduct in the opinion of the City Manager or designee is detrimental to the prosecution of the work. No person whose age or physical condition is such as to make this employment dangerous to his/her health and safety or to the health and safety of others shall be employed on the work, and in no event shall any persons under the age of sixteen (16) years be employed. The State of Florida prevailing wage law requires that the Proposer shall fully comply with all provisions contained in Section 215.19, "Schedule of Prevailing Wage Rates for Specified Public Construction." The wage rates set forth by such determination shall apply to this project.

INSURANCE

The Proposer shall procure and maintain at his/her own expense, during the life of the Contract, liability insurance as hereinafter specified. All such insurance shall be subject to the approval of the City for adequacy of protection and shall include a provision preventing cancellation without twenty (20) business days prior notice to the City in writing. The City shall be included as an additional insured on all liability insurance. The liability insurance required is as follows: Proposer's General Public Liability and Property Damage Insurance issued to the Proposer and protecting the Proposer from all claims for personal injury, including death, and all claims for destruction of or damage to property, arising out of or in connection with any operations under this Contract, whether such operations be by the Proposer or by any Subcontractor hired by the Proposer or anyone directly or indirectly employed by the Proposer or hired by the Proposer.

The successful Proposer shall supply and maintain insurance which defends, indemnifies and holds harmless the City of St. Pete Beach, its officers, employees and agents from and against any and all liability, damage claims, demands, costs, judgments, fees, attorney's fees or loss arising directly out of acts or omissions hereunder by the Proposer or third party under the direction or control of the Proposer. Such general and excess liability coverage shall be primary to any other coverage carried by the City of St Pete Beach. Proposer must furnish the City with Certificate of Insurance prior to commencement of work. An

approved Certificate of Insurance furnished by the Proposer's carrier to guarantee the Proposer being insured with the City of St Pete Beach must be named as a certificate holder for this contract. The following minimum coverage:

- Professional Liability Insurance $2,000,000 each occurrence.
- Commercial General Liability Insurance $1,000,000.00.
- Comprehensive General Liability Insurance of $1,000,000.00 each occurrence.
- Personal Injury for $1,000,000.00 each occurrence.
- Automobile Liability $1,000,000.00.
- General Workers Compensation Insurance as required by Florida law.
- Longshore Harbor Workers Compensation Insurance

PROTECTION OF WORK AND PROPERTY
The Proposer shall continuously maintain adequate protection of all their work and materials from damage or theft and shall protect the City's property and all adjacent property from injury or loss arising in connection with activities under their Contract. The Proposer shall make good any such damage, injury, or loss, except such as may be caused by agents or employees of the City.

The Proposer shall take, use, provide, and maintain all necessary precautions, safeguards, and protection to prevent accidents, or injury to persons or property on, about, or adjacent to the site of the work. Should the situation arise that physical security is needed the Proposer will provide security on off days and holidays. The Proposer shall be responsible for all charges incurred with such action.

The Proposer shall post danger signs warning against any hazards created by the work being done under their Contract. They shall designate a responsible member of their organization on the work, whose duty shall be the prevention of accidents, and the name of the person so designated shall be reported to the City Manager or designee and City in writing. In an emergency affecting the safety of life, or of the work or adjoining property, the Proposer, without special instruction or authorization from the City Manager or designee, or City, is hereby permitted to act, at their own discretion, to prevent such threatened loss or injury, and they must take such action if so instructed or authorized by the City Manager or designee. The Proposer shall also protect adjacent property as required by law.

PROPOSAL REVIEW AND CONTRACT AWARD
Failure to submit all documents requested at the time of proposal may deem the Proposer's proposal ineligible for award. The City of St. Pete Beach reserves the right to reject any or all proposals or parts of proposals. The contract shall be awarded by written notice to the responsible and responsive Contractor whose proposal is determined in writing to be the most advantageous to the City, taking into consideration the price and other criteria set forth in this request for proposals. The City may waive any informality.

LOCAL, STATE AND FEDERAL COMPLAINCE REQUIREMENTS
The laws of the State of Florida do apply to any purchase made under this Request for Proposal. Proposers shall comply with all local, state, and federal directives, orders and laws as applicable to their proposal and subsequent contracts include but not limited to Equal Employment Opportunity, Minority Business Enterprise, and OSHA as applicable to this contract.

Compliance with Fla. Stat. 448.095:

- Proposer agrees to comply with all applicable portions of Fla. Stat. 448.095. Proposer must use the

U.S. Department of Homeland Security's E-Verify System, hhttps://e-verify.uscis.gov/emp, to verify the employment eligibility of all employees hired on or after January 1, 2021 during the term of this Agreement.

- Subcontractors (i) Proposer shall also require all subcontractors performing work under this Agreement to use the E-Verify system for any employees they may hire during the term of this Agreement. (ii) Subcontractors shall provide Proposer with an affidavit stating the subcontractor does not employ, contract with, or subcontract with an unauthorized alien, as defined by Fla. Stat. 448.095 (iii) Proposer shall provide a copy of such affidavit to the City upon receipt and shall maintain a copy for the duration of the Agreement.

- Proposer must provide evidence of compliance with Fla. Stat. 448.05 by January 1, 2021. Evidence may consist of, but is not limited to, providing notice of Proposer's E-Verify number.

- Failure to comply with this provision is a material breach of the Agreement, and the City may choose to terminate the Agreement at its sole discretion. Proposer may be liable for all costs associated with the City securing the same services, inclusive, but not limited to, higher costs for the same services and proposal costs (if necessary). Any challenge to termination under this provision must be filed in the Circuit Court no later than 20 calendar days after the date of termination. If this agreement is terminated for a violation of the statute by the Proposer, the Proposer may not be awarded a public agreement for a period of 1 year after date of termination.

RESERVES THE RIGHT

The City reserves the right to accept or reject any and/or all proposals, to waive irregularities and technicalities, and to request re-submission. If only one proposal is received by the proposal date and time listed, the proposal may or may not be rejected by the City depending upon proposal review and the needs of the City.

The City reserves the right to select a firm with or without additional interviews and may decide to select any of the firms submitting proposals. The City reserves the right to award the contract to a responsible proposer submitting a responsible proposal, with a resulting negotiated agreement which is most advantageous and in the best interest of the City.

Proposers, Proposers, their agents, and associates shall not contact or solicit any City Commission member, City employee, or official regarding this RFP during any phase of the proposalding process. Failure to comply with the provision may result in disqualification of the Proposer, at the option of the City. Only that individual listed, or an approved designee, as the contact person for this RFP shall be contacted.

SUBMITTAL WITHDRAWAL

After submittals are opened, corrections or modifications to submittals are not permitted, but a responding firm may be permitted to withdraw an erroneous submittal prior to the award by the City Commission, if the following is established:

- That the responding firm acted in good faith in submitting the submittal;
- That in preparing the submittal there was an error of such magnitude that enforcement of the submittal would work severe hardship upon the respondent;
- That the error was not the result of gross negligence or willful inattention on the part of the respondent;
- That the error was discovered and communicated to the City within twenty-four (24) hours of submittal opening, along with a request for permission to withdraw the submittal; or
- The responding firm submits documentation and an explanation of how the error was made.

CONE OF SILENCE
Respondents to this solicitation or persons acting on their behalf may not contact, between the release of the solicitation and the end of the 72-hour period following the agency posting the notice of intended award, excluding Saturdays, Sundays, and state holidays, any employee or officer of the executive or legislative branch concerning any aspect of this solicitation, except in writing to the procurement officer or as provided in the solicitation documents. Violation of this provision may be grounds for rejecting a response.

TERMINATION
The resulting contract may be canceled by the City when:

- Sufficient funds are not available to continue its full and faithful performance of this contract.
- There is sub-standard or non-performance of contract.
- The City wishes to terminate at any time and for any reason, upon giving thirty (30) days prior written notice to the other party.

The resulting contract may be canceled by either party in the event of substantial failure to perform in accordance with the terms by the other party through no fault of the terminating party.

FISCAL NON-FUNDING

If funds for the requested services described herein are not appropriated via the annual budget adoption process, the City reserves the right to cancel this Agreement immediately upon written notice to the vendor.

PROJECT RECORDS
The awarded firm shall maintain auditable records concerning the procurement to account for all receipts and expenditures, and to document compliance with the Contract. These records shall be kept in accordance with generally accepted accounting methods, and the City of St. Pete Beach reserves the right to determine the record-keeping method in the event of non-conformity. These records shall be maintained for three (3) years after final payment has been made and shall be readily available to City personnel with reasonable notice, and to other persons in accordance with the Florida Public Disclosure Statutes. Additionally, the awarded firm shall abide by and comply with Florida Statutes regarding public records. Specifically, the firm shall be aware of the provisions found in Section 119.0701, Florida Statutes.

Upon completion of the project, all reports, studies, recommendations, forms, and other project specific information will need to be submitted in paper and in an electronic file format (.PDF, .JPEG) on CD or USB storage device.

V. REFERENCES & MINIMUM QUALIFICATIONS

Provide at least three (3) or more professional, business references with which you have contracted to provide similar services in the past five (5) years. Include the name of the person, its organization, telephone number, fax number, and e-mail address. Include any governmental agencies, with the same contact and descriptive information for which you have provided similar service within the past five (5) years.

Provide a brief description of the history and capabilities of the firm. Describe the types of projects or services the firm performs/has performed and the dollar value of each. Provide information regarding your firm's ability to complete this project. Demonstrate that the firm's personnel have experience with similar projects.

Identify all unresolved and ongoing claims and disputes against your firm in excess of $500,000. Include any claims against the principals of your firm or any claims your company may have against a third party. Provide a history of litigation, including the outcomes, for the past five (5) years.

The responding firm shall provide a statement of assurance that the firm is not presently in violations of any statutes or regulatory rules that might have an impact on the firm's operations. All applicable laws and regulations of the State of Florida and ordinances and regulations of the City of St. Pete Beach will apply.

Provide the overall bonding capacity for the company and provide a history of any claims against the Proposer's previous bonds for the past five (5) years.

The City shall be the sole final judge of qualifications of Proposer to perform service and reserves the exclusive right to accept or reject any proposal as it deems to be in the best interests of the City. The City reserves the right to make such investigation, as it deems necessary, to determine the ability of any proposer to perform the work or service requested. Failure to comply with the requirements of this section may be grounds for rejecting a response.

VI. CONTRACTOR'S PROPOSAL SUBMITTAL

The company that is submitting a proposal declares that it has extensive experience providing Task Work Order driven Civil On-Call Construction Services.

The undersigned, as Proposer, hereby declares that the only person or persons interested in the Proposal as principal or principals are named herein, and that no person other than herein mentioned has any interest in the Proposal or in the Agreement to be entered into; that this Proposal or Agreement is made without connection with any other person, company, or parties making a Proposal; and that it is in all respects fair and in good faith without collusion or fraud.

The Proposer further declares that they have examined the site of the work and informed themselves fully in regard to all conditions pertaining to the place where the work is to be done; that they have examined the Plans and Specifications for the work and Contract Documents relative thereto, and have read all special provisions furnished prior to the opening of proposals; and that they have satisfied themselves relative to the materials to be supplied and work to be performed.

The Proposer proposes and agrees, if the Proposal is accepted, to contract with the City of St. Pete Beach, Florida, in the form of an Agreement specified for **"Civil On Call Construction Services"** in St. Pete Beach, Florida, in full and complete accordance with the shown, noted, described, and reasonably intended requirements of the Plans, Specifications, and Contract Documents, to the full and entire satisfaction of the City of St. Pete Beach, Florida.

The successful Proposer shall be required to utilize the template Agreement in this Request for Proposals (RFP) and any questions regarding the Agreement must be addressed during the RFP process before submittal. The City reserves the right to respond or not respond to questions in the form of an addendum.

The Proposer proposes to furnish all materials, equipment, labor, and perform the work submitted in their proposal schedule for the City of St. Pete Beach **"Civil On Call Construction Services."**

COMPANY:_____ DATE: _____

ADDRESS:_____ PHONE:_____

PROPOSER: _____ NAME: _____

(SIGNATURE) (PRINT NAME & TITLE)

STATE OF FLORIDA
COUNTY OF _____

The foregoing instrument was sworn to (or affirmed), subscribed, and acknowledged before me by means of ☐ physical presence or ☐ online notarization, this _____ day of _____, 2026, by_____, who is personally known to me or has produced _____ as identification.

(SEAL)

_____
Notary Public – State of Florida

_____
(Print, Type, Stamp, or Commissioned Name of Notary Public)

SUBMIT PROPOSAL TO: Electronically via Bonfire only

VII. PUBLIC ENTITY CRIMINAL AFFIDAVIT

SWORN STATEMENT – PUBLIC ENTITY CRIMES

PURSUANT TO § 287.133 (3)(a), FLORIDA STATUTES, ON PUBLIC ENTITY CRIMES
THE FORM MUST BE SIGNED AND SWORN TO IN THE PRESENCE OF A NOTARY PUBLIC OR OTHER OFFICIAL AUTHORIZED TO ADMINISTER OATHS.

1. This sworn statement is submitted to: City of St. Pete Beach
by: _____
(Print individual's name and title)

for: _____
(Print name of entity submitting sworn statement)

at: _____
(Business address)

and (if applicable), its Federal Employer Identification Number (FEIN):

_____
(FEIN)
or, if the entity has no FEIN, include the Social Security Number:

_____
(SSN)

by the individual signing this sworn statement:
_____ (Signature)

2. I understand that a "public entity crime" as defined in § 287.133 (1)(g), Fla. Stat., means a violation of any State or Federal law by a person with respect to and directly related to the transaction of business with any public entity or with an agency or political subdivision of any other state or of the United States including, but not limited to, any proposal or contract for goods or services, any lease for real property, or any contract for the construction or repair of a public building or public work, involving antitrust, fraud, theft, bribery, collusion, racketeering, conspiracy, or material misrepresentation.

3. I understand that "convicted" or "conviction" as defined in § 287.133 (1)(b), Fla. Stat., means a finding of guilt or a conviction of public entity crime with or without an adjudication of guilt in any Federal or State trial court of record relating to charges brought by indictment or information after July 1, 1989, as a result of a jury verdict, non-jury trial, or entry of a plea of guilty or nolo contendere.

4. I understand that an "affiliate" as defined in § 287.133 (1)(a), Fla. Stat., means:
   a. A predecessor or successor of a person convicted of a public entity crime or
   b. An entity under the control of any natural person who is active in the management of the entity and who has been convicted of a public entity crime. The term "affiliate" includes those officers, directors, executives, partners, shareholders, employees, members, and agents who are active in the management of an affiliate. The ownership by one (1) person of shares constituting a controlling interest in another person or a pooling of equipment or income among persons when not for fair market value under the arm's length agreement, shall be a prima facie case that one (1) person controls another person. A person who knowingly enters into a joint venture with a person who has been convicted of a public crime in Florida during the preceding thirty-six (36) months shall be considered an affiliate.

5. I understand that a "person" as defined in Section 287.133 (1)(e), Fla. Stat., means any natural person or any entity organized under the laws of any state or of the United States with the legal power to enter into a binding contract and which proposals or applies to proposal on contracts let by a public entity, or which otherwise transacts or applies to transact business with a public entity. The term "person" includes those officers, directors, executives, partners, shareholders, employees, members, and agents who are active in management of an entity.

6. Based on information and belief, the **statement which I have marked below is true** in relation to the entity submitting this sworn statement (indicate which statement applies).

☐ Neither the entity submitting this sworn statement, nor any of its officers, directors, executives, partners, shareholders, employees, members, or agents who are active in the management of the entity nor any affiliate of the entity has been charged with and convicted of a public entity crime subsequent to July 1, 1989.

☐The entity submitting this sworn statement or one (1) or more of its officers, directors, executives, partners, shareholders, employees, members, or agents who are active in the management of the entity or an affiliate of the entity has been charged with and convicted of a public entity crime subsequent to July 1, 1989.

☐The entity submitting this sworn statement or one (1) or more of its officers, directors, executives, partners, shareholders, employees, members, or agents who are active in the management of the entity or an affiliate of the entity has been charged with and convicted of a public entity crime subsequent to July 1, 1989. However, there has been a subsequent proceeding before a Hearing Office of the State of Florida, Division of Administrative Hearings and the Final Order entered by the Hearing Officer determined that it was not in the public interest to place the entity submitting this sworn statement on the convicted vendor list (attach a copy of the final order).

I UNDERSTAND THAT THE SUBMISSION OF THIS FORM TO THE CONTRACTING OFFICE FOR THE PUBLIC ENTITY IDENTIFIED IN PARAGRAPH 1 ABOVE IS FOR THE PUBLIC ENTITY ONLY AND THAT THIS FORM IS VALID THROUGH DECEMBER 31 OF THE CALENDAR YEAR IN WHICH IT IS FILED. I ALSO UNDERSTAND THAT I AM REQUIRED TO INFORM THE PUBLIC ENTITY PRIOR TO ENTERING INTO A CONTRACT IN EXCESS OF THE THRESHOLD AMOUNT PROVIDED IN SECTION 287.017, FLORIDA STATUTES, FOR CATEGORY TWO OF ANY CHANGE IN THE INFORMATION CONTAINED IN THIS FORM.

STATE OF FLORIDA
COUNTY OF _____

The foregoing instrument was sworn to (or affirmed), subscribed, and acknowledged before me by means of ☐ physical presence or ☐ online notarization, this _____ day of _____, 2026, by_____, who is personally known to me or has produced _____ as identification.

(SEAL)

_____
Notary Public – State of Florida

_____
(Print, Type, Stamp, or Commissioned
Name of Notary Public)

VIII. NON-COLLUSION AFFADAVIT

STATE OF _____ COUNTY OF _____

I state that **I**_____ of _____,
(Name and Title) (Name of Firm)

I am authorized to make this affidavit on behalf of my firm and its owner, directors and officers. I am the person responsible in my firm for the price(s) and amount(s) of this Response, and the preparation of the Response. I state that:

1. The price(s) and amount(s) of this Response have been arrived at independently and without consultation, communication or agreement with any other Provider, potential provider, Proposal, or potential Proposal.
2. Neither the price(s) nor the amount(s) of this Response, and neither the approximate price(s) nor approximate amount(s) of this Response, have been disclosed to any other firm or person who is a Provider, potential Provider, Proposal, or potential Proposal, and they will not be disclosed before Proposal opening.
3. No attempt has been made or will be made to induce any firm or persons to refrain from submitting a Response for this contract, or to submit a price(s) higher that the prices in this Response, or to submit any intentionally high or noncompetitive price(s) or other form of complementary Response.
4. The Response of my firm is made in good faith and not pursuant to any agreement or discussion with, or inducement from, any firm or person to submit a complementary or other noncompetitive Response.
5. _____, its affiliates, subsidiaries, officers, director, and employees (Name of Firm) are not currently under investigation, by any governmental agency and have not in the last three years been convicted or found liable for any act prohibited by State or Federal law in any jurisdiction, involving conspiracy or collusion with respect to Proposal, on any public contract, except as follows:

I state that I and the named firm understand and acknowledge that the above representations are material and important, and will be relied on by the State of Florida for which this Response is submitted. I understand and my firm understands that any misstatement in this affidavit is, and shall be treated as, fraudulent concealment from the State of Florida of the true facts relating to the submission of responses for this contract.

Name of Organization:_____ Signed By: _____

Print Name:_____

The foregoing instrument was sworn to (or affirmed), subscribed, and acknowledged before me by means of ☐ physical presence or ☐ online notarization, this _____ day of _____, 2026, by _____, who is personally known to me or has produced _____ as identification.

(SEAL)

_____
Notary Public – State of Florida

_____
(Print, Type, Stamp, or Commissioned
Name of Notary Public)

Bid Form for City of St Pete Beach
On-Call Civil Construction Services
Request for Proposal

Specifications for the numbered pay items can be found in the current FDOT "Standard Specifications for Road and Bridge Construction".
Bid quantities are for comparison purposes only. This contract consists of various projects which are not yet defined and no quantities are guaranteed.

Pay Item No.	Item Description	Units	Est. Quantity	Unit Price	Amount
0101 1 (2501-5000)	MOBILIZATION (PER WORK ASSIGNMENT/LOCATION) - $2,501 TO $5,000	LS	1		$0.00
0101 1 (5501-25000)	MOBILIZATION (PER WORK ASSIGNMENT/LOCATION) - $5,001 TO $25,000	LS	1		$0.00
0101 1 (25001-50000)	MOBILIZATION (PER WORK ASSIGNMENT/LOCATION) - $25,001 TO $50,000	LS	1		$0.00
0101 1 (50001-150000)	MOBILIZATION (PER WORK ASSIGNMENT/LOCATION) - $50,001 TO $150,000	LS	1		$0.00
0101 1 (150001-250000)	MOBILIZATION (PER WORK ASSIGNMENT/LOCATION) - $150,001 TO $250,000	LS	1		$0.00
0101 1 (250001-350000)	MOBILIZATION (PER WORK ASSIGNMENT/LOCATION) - $250,001 TO $350,000	LS	1		$0.00
0101 1 (350001-500000)	MOBILIZATION (PER WORK ASSIGNMENT/LOCATION) - $350,001 to $500,000	LS	1		$0.00
0101 1 (500001+)	MOBILIZATION (PER WORK ASSIGNMENT/LOCATION) - $500,001 or more	LS	1		$0.00
0101 1 (2501-5000)	EMERGENCY MOBILIZATION (PER WORK ASSIGNMENT/LOCATION) - $2,501 TO $5,000	LS	1		$0.00
0101 1 (5501-25000)	EMERGENCY MOBILIZATION (PER WORK ASSIGNMENT/LOCATION) - $5,001 TO $25,000	LS	1		$0.00
0101 1 (25001-50000)	EMERGENCY MOBILIZATION (PER WORK ASSIGNMENT/LOCATION) - $25,001 TO $50,000	LS	1		$0.00
0101 1 (50001-150000)	EMERGENCY MOBILIZATION (PER WORK ASSIGNMENT/LOCATION) - $50,001 TO $150,000	LS	1		$0.00
0101 1 (150001-250000)	EMERGENCY MOBILIZATION (PER WORK ASSIGNMENT/LOCATION) - $150,001 TO $250,000	LS	1		$0.00
0102 1	MAINTENANCE OF TRAFFIC	Lump Sum (LS) cost to be assigned for each Task Order and shall not exceed 10% of the proposed construction cost.			
0102 3	COMMERCIAL MATERIAL FOR TEMPORARY DRIVEWAY MAINTENANCE	CY	50		$0.00
0102 14	TRAFFIC CONTROL OFFICER	HR	500		$0.00
0102 60	WORK ZONE SIGN	ED	6000		$0.00
0102 61	BUSINESS SIGN	EA	5		$0.00
0102 71 11	BARRIER WALL, TEMPORARY, F&I, CONCRETE	LF	200		$0.00
0102 71 13	BARRIER WALL, TEMPORARY, F&I, LOW PROFILE, CONCRETE	LF	200		$0.00
0102 71 14	BARRIER WALL, TEMPORARY, F&I, TYPE K	LF	200		$0.00
0102 71 21	BARRIER WALL, TEMPORARY, RELOCATE, CONCRETE	LF	200		$0.00
0102 71 23	BARRIER WALL, TEMPORARY, RELOCATE, LOW PROFILE, CONCRETE	LF	200		$0.00
0102 71 24	BARRIER WALL, TEMPORARY, RELOCATE, TYPE K	LF	200		$0.00
0102 73	TEMPORARY GUARDRAIL	LF	20		$0.00

0102 74 1	CHANNELIZING DEVICE- TYPES I, II, DI, VP, DRUM, OR LCD	ED	15000		$0.00
0102 74 2	CHANNELIZING DEVICE, TYPE III, 6'	ED	1000		$0.00
0102 74 7	CHANNELIZING DEVICE- PEDESTRIAN LCD (LONGITUDINAL CHANNELIZING DEVICE)	LF	1000		$0.00
0102 75 1	TEMPORARY SEPARATOR, F&I REMOVE	LF	500		$0.00
0102 75 2	TEMPORARY SEPARATOR, F&I REMAIN	LF	500		$0.00
0102 75 3	TEMPORARY SEPARATOR, INSTALL	LF	500		$0.00
0102 75 4	TEMPORARY SEPARATOR, RELOCATE	LF	500		$0.00
0102 75 5	TEMPORARY SEPARATOR, REMOVE	LF	500		$0.00
0102 76	ARROW BOARD / ADVANCE WARNING ARROW PANEL	ED	250		$0.00
0102 78	TEMPORARY RETROREFLECTIVE PAVEMENT MARKER	EA	50		$0.00
0102 89 1	TEMPORARY CRASH CUSHION, REDIRECTIVE OPTION	LO	5		$0.00
0102 99	PORTABLE CHANGEABLE MESSAGE SIGN, TEMPORARY	ED	600		$0.00
0102 104	TEMPORARY SIGNALIZATION AND MAINTENANCE, INTERSECTION	ED	100		$0.00
0102 107 1	TEMPORARY TRAFFIC DETECTION AND MAINTENANCE, INTERSECTION	ED	100		$0.00
0102 150 1	PORTABLE REGULATORY SIGN	ED	50		$0.00
0102 150 2	RADAR SPEED DISPLAY UNIT	ED	50		$0.00
0102 911 1	PAVEMENT MARKING REMOVABLE TAPE, WHITE OR BLACK, SKIP	LF	500		$0.00
0102 911 2	PAVEMENT MARKING REMOVABLE TAPE, WHITE, BLACK, SOLID	LF	500		$0.00
0102 911 3	PAVEMENT MARKING REMOVABLE TAPE, WHITE OR BLACK, OTHER	SF	25		$0.00
0102 912 1	PAVT MARKING REMOVABLE TAPE, YELLOW, SKIP	LF	500		$0.00
0102 912 2	PAVEMENT MARKING REMOVABLE TAPE, YELLOW, SOLID	LF	500		$0.00
0102 912 3	PAVEMENT MARKING REMOVABLE TAPE, YELLOW, OTHER	SF	25		$0.00
0104 1	ARTIFICIAL COVERINGS /ROLLED EROSION CONTROL PRODUCTS	SY	150		$0.00
0104 10 3	SEDIMENT BARRIER	LF	5000		$0.00
0104 11	FLOATING TURBIDITY BARRIER	LF	100		$0.00
0104 12	STAKED TURBIDITY BARRIER- NYLON REINFORCED PVC	LF	100		$0.00
0104 13 1	STAKED SILT FENCE, TYPE III	LF	500		$0.00
0104 13 2	STAKED SILT FENCE, TYPE IV	LF	500		$0.00
0104 18	INLET PROTECTION SYSTEM	EA	100		$0.00

0107 1	LITTER REMOVAL	AC	10		$0.00
0107 2	MOWING	AC	10		$0.00
0110 2 1	CLEARING & GRUBBING	AC	10		$0.00
0110 3	REMOVAL OF EXISTING STRUCTURES/BRIDGES	SF	20		$0.00
0110 4 10	REMOVAL OF EXISTING CONCRETE	SY	2000		$0.00
0110 7 1	MAILBOX, F&I SINGLE	EA	5		$0.00
0120 1	REGULAR EXCAVATION	CY	3000		$0.00
0120 3	LATERAL DITCH EXCAVATION	CY	100		$0.00
0120 4	SUBSOIL EXCAVATION	CY	100		$0.00
0120 5	CHANNEL EXCAVATION	CY	100		$0.00
0120 6	EMBANKMENT	CY	500		$0.00
0121 70	FLOWABLE FILL	CY	50		$0.00
0125 1	EXCAVATION FOR STRUCTURES	CY	25		$0.00
0145 1	GEOSYNTHETIC REINFORCED SOIL SLOPE	SF	25		$0.00
0160 4	TYPE B STABILIZATION	SY	7000		$0.00
0162 1 11	PREPARED SOIL LAYER-6" DEPTH	SY	50		$0.00
0162 1 12	PREPARED SOIL LAYER, FINISH SOIL LAYER, 12"	SY	50		$0.00
0162 1 21	PREPARED SOIL LAYER, ORGANIC SOIL LAYER, 6"	SY	50		$0.00
285701	OPTIONAL BASE, BASE GROUP 01	SY	100		$0.00
285702	OPTIONAL BASE, BASE GROUP 02	SY	100		$0.00
285703	OPTIONAL BASE, BASE GROUP 03	SY	100		$0.00
285704	OPTIONAL BASE, BASE GROUP 04	SY	1000		$0.00
285705	OPTIONAL BASE, BASE GROUP 05	SY	100		$0.00
285706	OPTIONAL BASE, BASE GROUP 06	SY	1000		$0.00
285707	OPTIONAL BASE, BASE GROUP 07	SY	100		$0.00
285708	OPTIONAL BASE, BASE GROUP 08	SY	1000		$0.00
285709	OPTIONAL BASE, BASE GROUP 09	SY	100		$0.00
285710	OPTIONAL BASE GROUP 10	SY	100		$0.00
285711	OPTIONAL BASE, BASE GROUP 11	SY	100		$0.00

285712	OPTIONAL BASE, BASE GROUP 12	SY	100		$0.00
285713	OPTIONAL BASE, BASE GROUP 13	SY	100		$0.00
285714	OPTIONAL BASE, BASE GROUP 14	SY	100		$0.00
285715	OPTIONAL BASE, BASE GROUP 15	SY	100		$0.00
0327 70 1	MILLING EXIST ASPH PAVT, 1" AVG DEPTH	SY	1000		$0.00
0327 70 2	MILLING EXIST ASPH PAVT, 3 1/2" AVG DEPTH	SY	200		$0.00
0327 70 3	MILLING EXIST ASPH PAVT, 4 1/2" AVG DEPTH	SY	200		$0.00
0327 70 4	MILLING EXIST ASPH PAVT, 3" AVG DEPTH	SY	200		$0.00
0327 70 5	MILLING EXIST ASPH PAVT, 2" AVG DEPTH	SY	200		$0.00
0327 70 6	MILLING EXIST ASPH PAVT, 1 1/2" AVG DEPTH	SY	5000		$0.00
0327 70 7	MILLING EXIST ASPH PAVT, 4" AVG DEPTH	SY	200		$0.00
0327 70 8	MILLING EXIST ASPH PAVT, 2 1/2" AVG DEPTH	SY	200		$0.00
0327 70 11	MILLING EXIST ASPH PAVT, 2 1/4" AVG DEPTH	SY	200		$0.00
0327 70 12	MILLING EXIST ASPH PAVT, 1 1/4" AVG DEPTH	SY	200		$0.00
0327 70 13	MILLING EXIST ASPH PAVT, 1 3/4" AVG DEPTH	SY	200		$0.00
0327 70 15	MILLING EXIST ASPH PAVT, 2 3/4" AVG DEPTH	SY	200		$0.00
0327 70 16	MILLING EXIST ASPH PAVT, 1/2" AVG DEPTH	SY	200		$0.00
0327 70 17	MILLING EXIST ASPH PAVT, 3 1/4" AVG DEPTH	SY	200		$0.00
0327 70 19	MILLING EXIST ASPH PAVT, 3/4" AVG DEPTH	SY	200		$0.00
0327 70 20	MILLING EXIST ASPH PAVT, 3 3/4" AVG DEPTH	SY	200		$0.00
0334 1 12 (1-99)	SUPERPAVE ASPHALTIC CONC, TRAFFIC B, 1-99 TONS	TN	50		$0.00
0334 1 12 (100-199)	SUPERPAVE ASPHALTIC CONC, TRAFFIC B, 100 - 199 TONS	TN	150		$0.00
0334 1 12 (200-300)	SUPERPAVE ASPHALTIC CONC, TRAFFIC B, 200 - 300 TONS	TN	250		$0.00
0334 1 12 (300+)	SUPERPAVE ASPHALTIC CONC, TRAFFIC B, 300 TONS OR MORE	TN	350		$0.00
0334 1 13 (1-99)	SUPERPAVE ASPHALTIC CONC, TRAFFIC C 1 - 99 TONS	TN	50		$0.00
0334 1 13 (100-199)	SUPERPAVE ASPHALTIC CONC, TRAFFIC C 100 - 199 TONS	TN	150		$0.00
0334 1 13 (200-300)	SUPERPAVE ASPHALTIC CONC, TRAFFIC C 200 -300 TONS	TN	250		$0.00
0334 1 13 (300+)	SUPERPAVE ASPHALTIC CONC, TRAFFIC C 300 TONS OR MORE	TN	350		$0.00
0334 1 52 (0-99)	SUPERPAVE ASPHALTIC CONCRETE, TRAFFIC B, PG76-22 0-99 TONS	TN	50		$0.00

0334 1 52 (100-199)	SUPERPAVE ASPHALTIC CONCRETE, TRAFFIC B, PG76-22 100-199 TONS	TN	150		$0.00
0334 1 52 (200-300)	SUPERPAVE ASPHALTIC CONCRETE, TRAFFIC B, PG76-22 200-300 TONS	TN	250		$0.00
0334 1 52 (300+)	SUPERPAVE ASPHALTIC CONCRETE, TRAFFIC B, PG76-22 300 TONS OR MORE	TN	350		$0.00
0334 1 53 (0-99)	SUPERPAVE ASPHALTIC CONCRETE, TRAFFIC C, PG76-22 0-99 TONS	TN	50		$0.00
0334 1 53 (100-199)	SUPERPAVE ASPHALTIC CONCRETE, TRAFFIC C, PG76-22 100-199 TONS	TN	150		$0.00
0334 1 53 (200-300)	SUPERPAVE ASPHALTIC CONCRETE, TRAFFIC C, PG76-22 200-300 TONS	TN	250		$0.00
0334 1 53 (300+)	SUPERPAVE ASPHALTIC CONCRETE, TRAFFIC C, PG76-22 300 TONS OR MORE	TN	350		$0.00
0334 1 54 (0-99)	SUPERPAVE ASPHALTIC CONCRETE, TRAFFIC D, PG76-22 0-99 TONS	TN	50		$0.00
0334 1 54 (100-199)	SUPERPAVE ASPHALTIC CONCRETE, TRAFFIC D, PG76-22 100-199 TONS	TN	150		$0.00
0334 1 54 (200-300)	SUPERPAVE ASPHALTIC CONCRETE, TRAFFIC D, PG76-22 200-300 TONS	TN	250		$0.00
0334 1 54 (300+)	SUPERPAVE ASPHALTIC CONCRETE, TRAFFIC D, PG76-22 300 TONS OR MORE	TN	350		$0.00
0334 1 56 (1-99)	SUPERPAVE ASPHALTIC CONCRETE, TRAFFIC B, HIGH POLYMER 0-99 TONS	TN	50		$0.00
0334 1 56 (100-199)	SUPERPAVE ASPHALTIC CONCRETE, TRAFFIC B, HIGH POLYMER 100-199 TONS	TN	150		$0.00
0334 1 56 (200-300)	SUPERPAVE ASPHALTIC CONCRETE, TRAFFIC B, HIGH POLYMER 200-300 TONS	TN	250		$0.00
0334 1 56 (300+)	SUPERPAVE ASPHALTIC CONCRETE, TRAFFIC B, HIGH POLYMER 300 TONS OR MORE	TN	350		$0.00
0334 1 57 (0-99)	SUPERPAVE ASPHALTIC CONCRETE, TRAFFIC C, HIGH POLYMER 0-99 TONS	TN	50		$0.00
0334 1 57 (100-199)	SUPERPAVE ASPHALTIC CONCRETE, TRAFFIC C, HIGH POLYMER 100-199 TONS	TN	150		$0.00
0334 1 57 (200-300)	SUPERPAVE ASPHALTIC CONCRETE, TRAFFIC C, HIGH POLYMER 200-300 TONS	TN	250		$0.00
0334 1 57 (300+)	SUPERPAVE ASPHALTIC CONCRETE, TRAFFIC C, HIGH POLYMER 300 TONS OR MORE	TN	350		$0.00
0334 1 58 (0-99)	SUPERPAVE ASPHALTIC CONCRETE, TRAFFIC D, HIGH POLYMER 0-99 TONS	TN	50		$0.00
0334 1 58 (100-199)	SUPERPAVE ASPHALTIC CONCRETE, TRAFFIC D, HIGH POLYMER 100-199 TONS	TN	150		$0.00
0334 1 58 (200-300)	SUPERPAVE ASPHALTIC CONCRETE, TRAFFIC D, HIGH POLYMER 200-300 TONS	TN	250		$0.00
0334 1 58 (300+)	SUPERPAVE ASPHALTIC CONCRETE, TRAFFIC D, HIGH POLYMER 300 TONS OR MORE	TN	350		$0.00
0337 7 80 (0-99)	ASPHALT CONCRETE FRICTION COURSE,TRAFFIC B, FC-9.5, PG 76-22 0-99 TONS	TN	50		$0.00
0337 7 80 (100-199)	ASPHALT CONCRETE FRICTION COURSE,TRAFFIC B, FC-9.5, PG 76-22 100-199 TONS	TN	150		$0.00
0337 7 80 (200-300)	ASPHALT CONCRETE FRICTION COURSE,TRAFFIC B, FC-9.5, PG 76-22 200-300 TONS	TN	250		$0.00
0337 7 80 (300+)	ASPHALT CONCRETE FRICTION COURSE,TRAFFIC B, FC-9.5, PG 76-22 300 TONS OR MORE	TN	350		$0.00
0337 7 81 (0-99)	ASPHALT CONCRETE FRICTION COURSE,TRAFFIC B, FC-12.5, PG 76-22 0-99 TONS	TN	50		$0.00
0337 7 81 (100-199)	ASPHALT CONCRETE FRICTION COURSE,TRAFFIC B, FC-12.5, PG 76-22 100-199 TONS	TN	150		$0.00

0337 7 81 (200-300)	ASPHALT CONCRETE FRICTION COURSE,TRAFFIC B, FC-12.5, PG 76-22 200-300 TONS	TN	250		$0.00
0337 7 81 (300+)	ASPHALT CONCRETE FRICTION COURSE,TRAFFIC B, FC-12.5, PG 76-22 300 TONS OR MORE	TN	350		$0.00
0337 7 82 (0-99)	ASPHALT CONCRETE FRICTION COURSE,TRAFFIC C, FC-9.5, PG 76-22 0-99 TONS	TN	50		$0.00
0337 7 82 (100-199)	ASPHALT CONCRETE FRICTION COURSE,TRAFFIC C, FC-9.5, PG 76-22 100-199 TONS	TN	150		$0.00
0337 7 82 (200-300)	ASPHALT CONCRETE FRICTION COURSE,TRAFFIC C, FC-9.5, PG 76-22 200-300 TONS	TN	250		$0.00
0337 7 82 (300+)	ASPHALT CONCRETE FRICTION COURSE,TRAFFIC C, FC-9.5, PG 76-22 300 TONS OR MORE	TN	350		$0.00
0337 7 83 (0-99)	ASPHALT CONCRETE FRICTION COURSE,TRAFFIC C, FC-12.5, PG 76-22 0-99 TONS	TN	50		$0.00
0337 7 83 (100-199)	ASPHALT CONCRETE FRICTION COURSE,TRAFFIC C, FC-12.5, PG 76-22 100-199 TONS	TN	150		$0.00
0337 7 83 (200-300)	ASPHALT CONCRETE FRICTION COURSE,TRAFFIC C, FC-12.5, PG 76-22 200-300 TONS	TN	250		$0.00
0337 7 83 (300+)	ASPHALT CONCRETE FRICTION COURSE,TRAFFIC C, FC-12.5, PG 76-22 300 TONS OR MORE	TN	350		$0.00
0337 7 85 (0-99)	ASPHALT CONCRETE FRICTION COURSE,TRAFFIC D, FC-12.5, PG 76-22 0-99 TONS	TN	50		$0.00
0337 7 85 (100-199)	ASPHALT CONCRETE FRICTION COURSE,TRAFFIC D, FC-12.5, PG 76-22 100-199 TONS	TN	150		$0.00
0337 7 85 (200-300)	ASPHALT CONCRETE FRICTION COURSE,TRAFFIC D, FC-12.5, PG 76-22 200-300 TONS	TN	250		$0.00
0337 7 85 (300+)	ASPHALT CONCRETE FRICTION COURSE,TRAFFIC D, FC-12.5, PG 76-22 300 TONS OR MORE	TN	350		$0.00
0337 7 90 (0-99)	ASPHALT CONCRETE FRICTION COURSE,TRAFFIC B, FC-9.5, HIGH POLYMER 0-99 TONS	TN	50		$0.00
0337 7 90 (100-199)	ASPHALT CONCRETE FRICTION COURSE,TRAFFIC B, FC-9.5, HIGH POLYMER 100-199 TONS	TN	150		$0.00
0337 7 90 (200-300)	ASPHALT CONCRETE FRICTION COURSE,TRAFFIC B, FC-9.5, HIGH POLYMER 200-300 TONS	TN	250		$0.00
0337 7 90 (300+)	ASPHALT CONCRETE FRICTION COURSE,TRAFFIC B, FC-9.5, HIGH POLYMER 300 TONS OR MORE	TN	350		$0.00
0337 7 93 (0-99)	ASPHALT CONCRETE FRICTION COURSE,TRAFFIC C, FC-12.5, HIGH POLYMER 0-99 TONS	TN	50		$0.00
0337 7 93 (100-199)	ASPHALT CONCRETE FRICTION COURSE,TRAFFIC C, FC-12.5, HIGH POLYMER 100-199 TONS	TN	150		$0.00
0337 7 93 (200-300)	ASPHALT CONCRETE FRICTION COURSE,TRAFFIC C, FC-12.5, HIGH POLYMER 200-300 TONS	TN	250		$0.00
0337 7 93 (300+)	ASPHALT CONCRETE FRICTION COURSE,TRAFFIC C, FC-12.5, HIGH POLYMER 300 TONS OR MORE	TN	350		$0.00
0337 7 94 (0-99)	ASPHALT CONCRETE FRICTION COURSE,TRAFFIC D, FC-12.5, HIGH POLYMER 0-99 TONS	TN	50		$0.00
0337 7 94 (100-199)	ASPHALT CONCRETE FRICTION COURSE,TRAFFIC D, FC-12.5, HIGH POLYMER 100-199 TONS	TN	150		$0.00
0337 7 94 (200-300)	ASPHALT CONCRETE FRICTION COURSE,TRAFFIC D, FC-12.5, HIGH POLYMER 200-300 TONS	TN	250		$0.00
0337 7 94 (300+)	ASPHALT CONCRETE FRICTION COURSE,TRAFFIC D, FC-12.5, HIGH POLYMER 300 TONS OR MORE	TN	350		$0.00
0339 1	MISCELLANEOUS ASPHALT PAVEMENT	TN	25		$0.00
0350 3 5	PLAIN CEMENT CONCRETE PAVEMENT, 8"	SY	100		$0.00
0350 3 9	PLAIN CEMENT CONCRETE PAVEMENT, 10"	SY	100		$0.00

0350 3 13	PLAIN CEMENT CONCRETE PAVEMENT, 12"	SY	100		$0.00
0350 5	CLEANING & SEALING JOINTS- CONCRETE PAVEMENT:	LF	100		$0.00
0350 30 13	CONCRETE PAVEMENT FOR ROUNDABOUT APRON, 12" DEPTH	SY	100		$0.00
0352 70	GRINDING CONCRETE PAVEMENT	SY	100		$0.00
0400 0 11	CONCRETE CLASS NS, GRAVITY WALL	CY	10		$0.00
0400 1 2	CONCRETE CLASS I, ENDWALLS	CY	10		$0.00
0400 1 11	CONCRETE CLASS I, RETAINING WALLS	CY	10		$0.00
0400 2 1	CONCRETE CLASS II, CULVERTS	CY	10		$0.00
0400 2 2	CONCRETE CLASS II, ENDWALLS	CY	10		$0.00
0400 2 5	CONCRETE CLASS II, BRIDGE SUBSTRUCTURE	CY	10		$0.00
0400 2 11	CONCRETE CLASS II, RETAINING WALLS	CY	10		$0.00
0400 3 1	CONCRETE CLASS III, CULVERTS	CY	10		$0.00
0400 3 8	CONCRETE CLASS III, BULKHEAD	CY	10		$0.00
0400 4 1	CONCRETE CLASS IV, CULVERTS	CY	10		$0.00
0400 4 2	CONCRETE CLASS IV, ENDWALLS	CY	10		$0.00
0400 4 5	CONCRETE CLASS IV, BRIDGE SUBSTRUCTURE	CY	10		$0.00
0400 4 11	CONC CLASS IV, RETAINING WALLS	CY	10		$0.00
0400 145	CLEANING CONCRETE SURFACE	SF	20		$0.00
0401 70 1	RESTORE SPALLED AREAS, EPOXY	CF	10		$0.00
0401 70 4	RESTORE SPALLED AREAS, PORTLAND CEMENT GROUT	CF	10		$0.00
0401 70 5	RESTORE SPALLED AREAS, CONTRACTORS OPTION	CF	10		$0.00
0411 1	EPOXY MATERIAL FOR CRACK INJECTION- STRUCTURES REHAB	GA	10		$0.00
0411 2	CRACKS INJECT & SEAL- STRUCTURES REHAB	LF	25		$0.00
413-149	PENETRANT SEALER	GA	10		$0.00
413-154	CLEANING & SEALING CONCRETE SURFACES- PENETRANT SEALER OR METHACRYLATES	SF	25		$0.00
0415 1 1	REINFORCING STEEL- ROADWAY	LB	100		$0.00
0415 1 3	REINFORCING STEEL- RETAINING WALL	LB	100		$0.00
0415 1 5	REINFORCING STEEL- BRIDGE SUBSTRUCTURE	LB	100		$0.00
0415 1 6	REINFORCING STEEL- MISCELLANEOUS	LB	100		$0.00

0415 1 8	REINFORCING STEEL- BULKHEAD	LB	100		$0.00
0425 1201	INLETS, CURB, TYPE 9, <10'	EA	3		$0.00
0425 1202	INLETS, CURB, TYPE 9, >10'	EA	3		$0.00
0425 1203	INLETS, CURB, TYPE 9, J BOT, <10'	EA	3		$0.00
0425 1204	INLETS, CURB, TYPE 9, J BOT, >10'	EA	3		$0.00
0425 1205	INLETS, CURB, TYPE 9, PARTIAL	EA	3		$0.00
0425 1209	INLETS, CURB, TYPE 9, MODIFY	EA	3		$0.00
0425 1211	INLETS, CURB, TYPE 10, <10'	EA	3		$0.00
0425 1212	INLETS, CURB, TYPE 10, >10'	EA	3		$0.00
0425 1213	INLETS, CURB, TYPE 10, J BOT <10'	EA	3		$0.00
0425 1214	INLETS, CURB, TYPE 10, J BOT >10'	EA	3		$0.00
0425 1215	INLETS, CURB, TYPE 10, PARTIAL	EA	3		$0.00
0425 1311	INLETS, CURB, TYPE P-1, <10'	EA	3		$0.00
0425 1312	INLETS, CURB TYPE P-1, >10'	EA	3		$0.00
0425 1315	INLETS, CURB TYPE P-1, PARTIAL	EA	3		$0.00
0425 1319	INLETS, CURB TYPE P-1, MODIFY	EA	3		$0.00
0425 1321	INLETS, CURB, TYPE P-2, <10'	EA	3		$0.00
0425 1322	INLETS, CURB, TYPE P-2, >10'	EA	3		$0.00
0425 1325	INLETS, CURB, TYPE P-2, PARTIAL	EA	3		$0.00
0425 1329	INLETS, CURB TYPE P-2, MODIFY	EA	3		$0.00
0425 1331	INLETS, CURB, TYPE P-3, <10'	EA	3		$0.00
0425 1332	INLETS, CURB. TYPE P-3, >10'	EA	3		$0.00
0425 1335	INLETS, CURB, TYPE P-3, PARTIAL	EA	3		$0.00
0425 1341	INLETS, CURB, TYPE P-4, <10'	EA	3		$0.00
0425 1342	INLETS, CURB, TYPE P-4, >10'	EA	3		$0.00
0425 1345	INLETS, CURB, TYPE P-4, PARTIAL	EA	3		$0.00
0425 1349	INLETS, CURB, TYPE P-4, MODIFY	EA	3		$0.00
0425 1351	INLETS, CURB, TYPE P-5, <10'	EA	3		$0.00
0425 1352	INLETS, CURB, TYPE P-5, >10'	EA	3		$0.00

0425 1355	INLETS, CURB, TYPE P-5, PARTIAL	EA	3		$0.00
0425 1359	INLETS, CURB, TYPE P-5, MODIFY	EA	3		$0.00
0425 1361	INLETS, CURB, TYPE P-6, <10'	EA	3		$0.00
0425 1362	INLETS, CURB, TYPE P-6, >10'	EA	3		$0.00
0425 1365	INLETS, CURB, TYPE P-6, PARTIAL	EA	3		$0.00
0425 1369	INLETS, CURB, TYPE P-6, MODIFY	EA	3		$0.00
0425 1411	INLETS, CURB TYPE J-1, <10'	EA	3		$0.00
0425 1412	INLETS, CURB, TYPE J-1, >10'	EA	3		$0.00
0425 1415	INLETS, CURB, TYPE J-1, PARTIAL	EA	3		$0.00
0425 1419	INLETS, CURB, TYPE J-1, MODIFY	EA	3		$0.00
0425 1421	INLETS, CURB, TYPE J-2, <10'	EA	3		$0.00
0425 1422	INLETS, CURB, TYPE J-2, >10'	EA	3		$0.00
0425 1425	INLETS, CURB, TYPE J-2, PARTIAL	EA	3		$0.00
0425 1429	INLETS, CURB, TYPE J-2, MODIFY	EA	3		$0.00
0425 1431	INLETS, CURB, TYPE J-3, <10'	EA	3		$0.00
0425 1432	INLETS, CURB, TYPE J-3, >10'	EA	3		$0.00
0425 1435	INLETS, CURB, TYPE J-3, PARTIAL	EA	3		$0.00
0425 1441	INLETS, CURB, TYPE J-4, <10'	EA	3		$0.00
0425 1442	INLETS, CURB, TYPE J-4, >10'	EA	3		$0.00
0425 1445	INLETS, CURB, TYPE J-4, PARTIAL	EA	3		$0.00
0425 1451	INLETS, CURB, TYPE J-5, <10'	EA	3		$0.00
0425 1452	INLETS, CURB, TYPE J-5, >10'	EA	3		$0.00
0425 1455	INLETS, CURB, TYPE J-5, PARTIAL	EA	3		$0.00
0425 1459	INLETS, CURB, TYPE J-5, MODIFY	EA	3		$0.00
0425 1461	INLETS, CURB, TYPE J-6, <10'	EA	3		$0.00
0425 1462	INLETS, CURB, TYPE J-6, >10'	EA	3		$0.00
0425 1465	INLETS, CURB, TYPE J-6, PARTIAL	EA	3		$0.00
0425 1469	INLETS, CURB, TYPE J-6, MODIFY	EA	3		$0.00
0425 1471	INLETS, CURB, TYPE 7, <10'	EA	3		$0.00

0425 1472	INLETS, CURB, TYPE 7, >10'	EA	3		$0.00
0425 1473	INLETS, CURB, TYPE 7, J BOT , <10'	EA	3		$0.00
0425 1474	INLETS, CURB, TYPE 7, J BOT ,>10'	EA	3		$0.00
0425 1475	INLETS, CURB, TYPE 7, PARTIAL	EA	3		$0.00
0425 1479	INLETS, CURB, TYPE 7, MODIFY	EA	3		$0.00
0425 1481	INLETS, CURB, TYPE 8, <10'	EA	3		$0.00
0425 1483	INLETS, CURB, TYPE 8, J BOT , <10'	EA	3		$0.00
0425 1484	INLETS, CURB, TYPE 8, J BOT ,>10'	EA	3		$0.00
0425 1485	INLETS, CURB, TYPE 8, PARTIAL	EA	3		$0.00
0425 1489	INLETS, CURB, TYPE 8, MODIFY	EA	3		$0.00
0425 1501	INLETS, DT BOT, TYPE A, <10'	EA	3		$0.00
0425 1502	INLETS, DT BOT, TYPE A, >10'	EA	3		$0.00
0425 1503	INLETS, DT BOT, TYPE A, J BOT, <10'	EA	3		$0.00
0425 1504	INLETS, DT BOT, TYPE A, J BOT, >10'	EA	3		$0.00
0425 1505	INLETS, DT BOT, TYPE A, PARTIAL	EA	3		$0.00
0425 1511	INLETS, DT BOT, TYPE B, <10'	EA	3		$0.00
0425 1512	INLETS, DT BOT, TYPE B, >10'	EA	3		$0.00
0425 1513	INLETS, DT BOT, TYPE B, J BOT, <10'	EA	3		$0.00
0425 1514	INLETS, DT BOT, TYPE B, J BOT, >10'	EA	3		$0.00
0425 1515	INLETS, DT BOT, TYPE B, PARTIAL	EA	3		$0.00
0425 1519	INLETS, DT BOT, TYPE B, MODIFY	EA	3		$0.00
0425 1521	INLETS, DT BOT, TYPE C,<10'	EA	3		$0.00
0425 1522	INLETS, DT BOT, TYPE C,>10'	EA	3		$0.00
0425 1523	INLETS, DT BOT, TYPE C,JBOT, <10'	EA	3		$0.00
0425 1524	INLETS, DT BOT, TYPE C, JBOT, >10'	EA	3		$0.00
0425 1525	INLETS, DITCH BOTTOM, TYPE C, PARTIAL	EA	3		$0.00
0425 1529	INLETS, DT BOT, TYPE C, MODIFY	EA	3		$0.00
0425 1531	INLETS, DITCH BOTTOM, TYPE C MODIFIED- BACK OF SIDEWALK, <10'	EA	3		$0.00
0425 1532	INLETS, DITCH BOTTOM, TYPE C MODIFIED- BACK OF SIDEWALK, >10'	EA	3		$0.00

0425 1533	INLETS, DITCH BOTTOM TYPE C MODIFIED- BACK OF SIDEWALK, J BOT, <10'	EA	3		$0.00
0425 1534	INLETS, DITCH BOTTOM, TYPE C MODIFIED- BACK OF SIDEWALK, J BOT, >10'	EA	3		$0.00
0425 1535	INLETS, DITCH BOTTOM TYPE C MODIFIED- BACK OF SIDEWALK, PARTIAL	EA	3		$0.00
0425 1541	INLETS, DT BOT, TYPE D, <10'	EA	3		$0.00
0425 1542	INLETS, DT BOT, TYPE D, >10'	EA	3		$0.00
0425 1543	INLETS, DITCH BOTTOM, TYPE D, J BOT, <10'	EA	3		$0.00
0425 1544	INLETS, DITCH BOTTOM, TYPE D, J BOT, >10'	EA	3		$0.00
0425 1545	INLETS, DITCH BOTTOM, TYPE D, PARTIAL	EA	3		$0.00
0425 1549	INLETS, DT BOT, TYPE D, MODIFY	EA	3		$0.00
0425 1551	INLETS, DT BOT, TYPE E, <10'	EA	3		$0.00
0425 1552	INLETS, DT BOT, TYPE E, >10'	EA	3		$0.00
0425 1553	INLETS, DT BOT, TYPE E, J BOT, <10'	EA	3		$0.00
0425 1554	INLETS, DT BOT, TYPE E, J BOT, >10'	EA	3		$0.00
0425 1555	INLETS, DT BOT, TYPE E, PARTIAL	EA	3		$0.00
0425 1559	INLETS, DT BOT, TYPE E, MODIFY	EA	3		$0.00
0425 1561	INLETS, DT BOT, TYPE F, <10'	EA	3		$0.00
0425 1562	INLETS, DT BOT, TYPE F, >10'	EA	3		$0.00
0425 1563	INLETS, DITCH BOTTOM, TYPE F, J BOT, <10'	EA	3		$0.00
0425 1564	INLETS, DITCH BOTTOM, TYPE F, J BOT, >10'	EA	3		$0.00
0425 1565	INLETS, DITCH BOTTOM, TYPE F, PARTIAL	EA	3		$0.00
0425 1569	INLETS, DITCH BOTTOM, TYPE F, MODIFY	EA	3		$0.00
0425 1571	INLETS, DITCH BOTTOM, TYPE G, <10'	EA	3		$0.00
0425 1572	INLETS, DITCH BOTTOM, TYPE G, >10'	EA	3		$0.00
0425 1573	INLETS, DITCH BOTTOM, TYPE G, J BOT, <10'	EA	3		$0.00
0425 1574	INLETS, DITCH BOTTOM, TYPE G, J BOT, >10'	EA	3		$0.00
0425 1575	INLETS, DITCH BOTTOM, TYPE G, PARTIAL	EA	3		$0.00
0425 1579	INLETS, DITCH BOTTOM, TYPE G, MODIFY	EA	3		$0.00
0425 1581	INLETS, DT BOT, TYPE H, <10'	EA	3		$0.00
0425 1582	INLETS, DT BOT, TYPE H, >10'	EA	3		$0.00

0425 1583	INLETS, DT BOT, TYPE H, J BOTTOM <10'	EA	3		$0.00
0425 1584	INLETS, DT BOT, TYPE H, J BOTTOM >10'	EA	3		$0.00
0425 1585	INLETS, DT BOT, TYPE H, PARTIAL	EA	3		$0.00
0425 1589	INLETS, DT BOT, TYPE H, MODIFY	EA	3		$0.00
0425 1601	INLETS, DT BOT, TYPE J, <10'	EA	3		$0.00
0425 1602	INLETS, DT BOT, TYPE J, >10'	EA	3		$0.00
0425 1603	INLETS, DT BOT, TYPE J, J BOT, <10'	EA	3		$0.00
0425 1604	INLETS, DT BOT, TYPE J, JBOT,>10'	EA	3		$0.00
0425 1605	INLETS, DT BOT, TYPE J, PARTIAL	EA	3		$0.00
0425 1609	INLETS, DT BOT, TYPE J, MODIFY	EA	3		$0.00
0425 1611	INLETS, DITCH BOTTOM, TYPE K, <10'	EA	3		$0.00
0425 1619	INLETS, DITCH BOTTOM, TYPE K, J BOTTOM, MODIFY	EA	3		$0.00
0425 1701	INLETS, GUTTER, TYPE S, <10'	EA	3		$0.00
0425 1702	INLETS, GUTTER, TYPE S, >10'	EA	3		$0.00
0425 1703	INLETS, GUTTER, TYPE S, J BOTTOM <10'	EA	3		$0.00
0425 1704	INLETS, GUTTER, TYPE S, J BOTTOM, >10'	EA	3		$0.00
0425 1705	INLETS, GUTTER, TYPE S, PARTIAL	EA	3		$0.00
0425 1711	INLETS, GUTTER, TYPE V, <10'	EA	3		$0.00
0425 1712	INLETS, GUTTER, TYPE V, >10'	EA	3		$0.00
0425 1713	INLETS, GUTTER, TYPE V, J BOT, <10'	EA	3		$0.00
0425 1714	INLETS, GUTTER, TYPE V, J BOTTOM, >10'	EA	3		$0.00
0425 1715	INLETS, GUTTER, TYPE V, PARTIAL	EA	3		$0.00
0425 1719	INLETS, GUTTER, TYPE V, MODIFY	EA	3		$0.00
0425 1910	INLETS, CLOSED FLUME	EA	3		$0.00
0425 2 41	MANHOLES, P-7, <10'	EA	3		$0.00
0425 2 42	MANHOLES, P-7, >10'	EA	3		$0.00
0425 2 43	MANHOLES, P-7, PARTIAL	EA	3		$0.00
0425 2 61	MANHOLES, P-8, <10'	EA	3		$0.00
0425 2 62	MANHOLES, P-8, >10'	EA	3		$0.00

0425 2 63	MANHOLES, P-8, PARTIAL	EA	3		$0.00
0425 2 71	MANHOLES, J-7, <10'	EA	3		$0.00
0425 2 72	MANHOLES, J-7, >10'	EA	3		$0.00
0425 2 73	MANHOLES, J-7, PARTIAL	EA	3		$0.00
0425 2 91	MANHOLES, J-8, <10'	EA	3		$0.00
0425 2 92	MANHOLES, J-8, >10'	EA	3		$0.00
0425 2 93	MANHOLES, J-8, PARTIAL	EA	3		$0.00
0425 2110	MANHOLES, REPAIR	EA	3		$0.00
0425 3 41	JUNCTION BOX, DRAINAGE, P-7, <10'	EA	3		$0.00
0425 3 42	JUNCTION BOXES, P-7, >10'	EA	3		$0.00
0425 3 43	JUNCTION BOX, DRAINAGE, P-7, PARTIAL	EA	3		$0.00
0425 3 50	JUNCTION BOX, DRAINAGE, REPAIR	EA	3		$0.00
0425 3 61	JUNCTION BOXES, J-7, <10'	EA	3		$0.00
0425 3 62	JUNCTION BOXES, J-7, >10'	EA	3		$0.00
0425 3 63	JUNCTION BOXES, DRAINAGE, J-7, PARTIAL	EA	3		$0.00
0425 4	INLETS, ADJUST	EA	3		$0.00
0425 5	MANHOLE, ADJUST	EA	3		$0.00
0425 6	VALVE BOXES, ADJUST	EA	3		$0.00
0425 7	MANHOLE COVER- REPLACE	EA	3		$0.00
0425 8	DRAINAGE STRUCTURES, MISCELLANEOUS, ADJUST	EA	3		$0.00
0425 11	MODIFY EXISTING DRAINAGE STRUCTURE	EA	3		$0.00
0425 14 1	GRATE FOR EXISTING DRAINAGE STRUCTURE, FURNISH AND INSTALL	SF	3		$0.00
0425 15 41	INLET TOP, REPAIR, CURB INLET	EA	3		$0.00
0425 15 42	INLET TOP, REPAIR, DITCH BOTTOM INLET	EA	3		$0.00
0425 15 51	INLET TOP, REPLACE, CURB INLET	EA	3		$0.00
0425 15 52	INLET TOP, REPLACE, DITCH BOTTOM INLET	EA	3		$0.00
0425 16 11	DRAINAGE MANHOLE- REPLACE TOP AND RIM	EA	3		$0.00
0425 82	REPLACE GRATE	EA	3		$0.00
0430 94 1	DESILTING PIPE, 0 - 24"	LF	50		$0.00

0430 94 2	DESILTING PIPE, 25 - 36"	LF	50		$0.00
430173112	PIPE CULVERT OPTIONAL MATERIAL, ROUND, 12", GUTTER DRAIN	LF	50		$0.00
430173115	PIPE CULVERT OPTIONAL MATERIAL, ROUND, 15", GUTTER DRAIN	LF	50		$0.00
430173118	PIPE CULVERT OPTIONAL MATERIAL, ROUND, 18", GUTTER DRAIN	LF	50		$0.00
430173124	PIPE CULVERT OPTIONAL MATERIAL, ROUND, 24", GUTTER DRAIN	LF	50		$0.00
430173130	PIPE CULVERT OPTIONAL MATERIAL, ROUND, 30", GUTTER DRAIN	LF	50		$0.00
430173136	PIPE CULVERT OPTIONAL MATERIAL, ROUND, 36", GUTTER DRAIN	LF	50		$0.00
430173142	PIPE CULVERT, OPTIONAL MATERIAL, ROUND, 42", GUTTER DRAIN	LF	50		$0.00
430173148	PIPE CULVERT, OPTIONAL MATERIAL, ROUND, 48" GUTTER DRAIN	LF	50		$0.00
430173218	PIPE CULVERT OPTIONAL MATERIAL, OTHER/ELLIPTICAL, 18", GUTTER DRAIN	LF	50		$0.00
430174112	PIPE CULVERT, OPTIONAL MATERIAL, ROUND, 12"SD	LF	50		$0.00
430174115	PIPE CULVERT, OPTIONAL MATERIAL, ROUND, 15"SD	LF	50		$0.00
430174118	PIPE CULVERT, OPTIONAL MATERIAL, ROUND, 18"SD	LF	50		$0.00
430174124	PIPE CULVERT, OPTIONAL MATERIAL, ROUND, 24"SD	LF	50		$0.00
430174130	PIPE CULVERT, OPTIONAL MATERIAL, ROUND, 30"SD	LF	50		$0.00
430174142	PIPE CULVERT, OPTIONAL MATERIAL, ROUND, 42"SD	LF	50		$0.00
430174148	PIPE CULVERT, OPTIONAL MATERIAL, ROUND, 48"SD	LF	50		$0.00
430174154	PIPE CULVERT, OPTIONAL MATERIAL, ROUND, 54"SD	LF	50		$0.00
430174160	PIPE CULVERT, OPTIONAL MATERIAL, ROUND, 60"SD	LF	50		$0.00
430174172	PIPE CULVERT, OPTIONAL MATERIAL, ROUND, 72"SD	LF	50		$0.00
430174215	PIPE CULVERT, OPTIONAL MATERIAL, OTHER SHAPE - ELLIP/ARCH, 15"SD	LF	50		$0.00
430174218	PIPE CULVERT, OPTIONAL MATERIAL, OTHER SHAPE - ELLIP/ARCH, 18"SD	LF	50		$0.00
430174224	PIPE CULVERT, OPTIONAL MATERIAL, OTHER SHAPE - ELLIP/ARCH, 24"SD	LF	50		$0.00
430174230	PIPE CULVERT, OPTIONAL MATERIAL, OTHER SHAPE - ELLIP/ARCH, 30"SD	LF	50		$0.00
430174236	PIPE CULVERT, OPTIONAL MATERIAL, OTHER SHAPE - ELLIP/ARCH, 36"SD	LF	50		$0.00
430174242	PIPE CULVERT, OPTIONAL MATERIAL, ELLIP/OTHER, 42"SD	LF	50		$0.00
430174248	PIPE CULVERT,OPTIONAL MATERIAL,OTHER-ELIP/ARCH, 48"SD	LF	50		$0.00
430175112	PIPE CULVERT,OPTIONAL MATERIAL,ROUND, 12"S/CD	LF	50		$0.00
430175115	PIPE CULVERT,OPTIONAL MATERIAL,ROUND, 15"S/CD	LF	50		$0.00

430175118	PIPE CULVERT, OPTIONAL MATERIAL, ROUND, 18"S/CD	LF	250		$0.00
430175124	PIPE CULVERT, OPTIONAL MATERIAL, ROUND, 24"S/CD	LF	50		$0.00
430175130	PIPE CULVERT, OPT MATERIAL, ROUND, 30"S/CD	LF	50		$0.00
430175136	PIPE CULVERT, OPT MATERIAL, ROUND, 36"S/CD	LF	50		$0.00
430175140	PIPE CULVERT, OPT MATERIAL, ROUND, 40"S/CD	LF	50		$0.00
430175142	PIPE CULVERT, OPT MATERIAL, ROUND, 42"S/CD	LF	50		$0.00
430175148	PIPE CULVERT, OPT MATERIAL, ROUND, 48"S/CD	LF	50		$0.00
430175154	PIPE CULVERT, OPT MATERIAL, ROUND, 54"S/CD	LF	50		$0.00
430175160	PIPE CULVERT, OPT MATERIAL, ROUND, 60"S/CD	LF	50		$0.00
430175166	PIPE CULVERT, OPT MATERIAL, ROUND, 66"S/CD	LF	50		$0.00
430175172	PIPE CULVERT, OPT MATERIAL, ROUND, 72"S/CD	LF	50		$0.00
430175178	PIPE CULVERT, OPT MATERIAL, ROUND, 78" STORM/CROSS DRAIN	LF	50		$0.00
430175184	PIPE CULVERT, OPT MATERIAL, ROUND, 84"S/CD	LF	50		$0.00
430175196	PIPE CULVERT, OPT MATERIAL, ROUND, 96"S/CD	LF	50		$0.00
430175215	PIPE CULVERT,OPTIONAL MATERIAL,OTHER-ELIP/ARCH, 15"S/CD	LF	50		$0.00
430175218	PIPE CULVERT,OPTIONAL MATERIAL,OTHER-ELIP/ARCH, 18"S/CD	LF	50		$0.00
430175224	PIPE CULVERT,OPTIONAL MATERIAL,OTHER SHAPE-ELIP/ARCH, 24"S/CD	LF	50		$0.00
430175230	PIPE CULVERT, OPT MATERIAL, OTHER SHAPE - ELIP/ARCH, 30"S/CD	LF	50		$0.00
430175236	PIPE CULVERT, OPT MATERIAL, OTHER SHAPE - ELIP/ARCH, 36"S/CD	LF	50		$0.00
430175242	PIPE CULVERT, OPT MATERIAL, OTHER SHAPE - ELIP/ARCH, 42"S/CD	LF	50		$0.00
430175248	PIPE CULVERT, OPT MATERIAL, OTHER SHAPE - ELIP/ARCH, 48"S/CD	LF	50		$0.00
430175254	PIPE CULVERT, OPT MATERIAL, OTHER SHAPE - ELIP/ARCH, 54"S/CD	LF	50		$0.00
430175260	PIPE CULVERT, OPT MATERIAL, OTHER SHAPE - ELIP/ARCH, 60"S/CD	LF	50		$0.00
430175266	PIPE CULVERT, OPT MATERIAL, OTHER SHAPE - ELIP/ARCH, 66"S/CD	LF	50		$0.00
430175272	PIPE CULVERT, OPT MATERIAL, OTHER SHAPE - ELIP/ARCH, 72"S/CD	LF	50		$0.00
430175299	PIPE CULVERT,OPTIONAL MATERIAL,OTHER SHAPE-ELIP/ARCH, 99" OR >, S/CD	LF	50		$0.00
430185118	PIPE CULVERT,OPTIONAL MATERIAL,ROUND, JACK & BORE, 18" , STORM AND CROSS DRAIN	LF	50		$0.00
430185124	PIPE CULVERT,OPTIONAL MATERIAL,ROUND, JACK & BORE, 24", STORM AND CROSS DRAIN	LF	50		$0.00
430185130	PIPE CULVERT,OPTIONAL MATERIAL,ROUND, JACK & BORE, 30", STORM AND CROSS DRAIN	LF	50		$0.00

430185136	PIPE CULVERT,OPTIONAL MATERIAL,ROUND, JACK & BORE, 36", STORM AND CROSS DRAIN	LF	50		$0.00
430185142	PIPE CULVERT,OPTIONAL MATERIAL,ROUND, JACK & BORE, 42", STORM AND CROSS DRAIN	LF	50		$0.00
430185148	PIPE CULVERT,OPTIONAL MATERIAL,ROUND, JACK & BORE, 48", STORM AND CROSS DRAIN	LF	50		$0.00
430185154	PIPE CULVERT,OPTIONAL MATERIAL,ROUND, JACK & BORE, 54", STORM AND CROSS DRAIN	LF	50		$0.00
430185160	PIPE CULVERT,OPTIONAL MATERIAL,ROUND, JACK & BORE, 60" , STORM AND CROSS DRAIN	LF	50		$0.00
430185166	PIPE CULVERT,OPTIONAL MATERIAL,ROUND, JACK & BORE, 66" , STORM AND CROSS DRAIN	LF	50		$0.00
430185178	PIPE CULVERT,OPTIONAL MATERIAL,ROUND, JACK & BORE, 78" , STORM AND CROSS DRAIN	LF	50		$0.00
0430200 21	FLARED END SECTION, CONCRETE, 12"	EA	3		$0.00
0430200 23	FLARED END SECTION, CONCRETE, 15"	EA	3		$0.00
0430200 25	FLARED END SECTION, CONCRETE, 18"	EA	3		$0.00
0430200 29	FLARED END SECTION, CONCRETE, 24"	EA	3		$0.00
0430200 33	FLARED END SECTION, CONCRETE, 30"	EA	3		$0.00
0430200 38	FLARED END SECTION, CONCRETE, 36"	EA	3		$0.00
0430200 40	FLARED END SECTION, CONCRETE, 42"	EA	3		$0.00
0430200 41	FLARED END SECTION, CONCRETE, 48"	EA	3		$0.00
0430200 42	FLARED END SECTION, CONCRETE, 54"	EA	3		$0.00
0430200 43	FLARED END SECTION, CONCRETE, 60"	EA	3		$0.00
0430200 44	FLARED END SECTION, CONCRETE, 66"	EA	3		$0.00
0430200 45	FLARED END SECTION, CONCRETE, 72"	EA	3		$0.00
430600025	U-ENDWALL, STD 260, 1:6 SLOPE, 18"PIPE	EA	3		$0.00
430600125	U-ENDWALL, STD 260, 1:4 SLOPE, 18"PIPE	EA	3		$0.00
430602123	U-ENDWALL, WITH GRATE,STD INDEX 260, 1:4 SLOPE, 15"	EA	3		$0.00
430602125	U-ENDWALL, WITH GRATE,STD 260, 1:4 SLOPE, 18"	EA	3		$0.00
430602129	U-ENDWALL, WITH GRATE,STD 260, 1:4 SLOPE, 24"	EA	3		$0.00
430602133	U-ENDWALL, WITH GRATE,STD INDEX 260, 1:4 SLOPE, 30"	EA	3		$0.00
430610025	U-ENDWALL, STD 261, 1:6 SLOPE, 18"PIPE	EA	3		$0.00
430610029	U-ENDWALL, STD 261, 1:6 SLOPE, 24"PIPE	EA	3		$0.00
430610033	U-ENDWALL, STD 261, 1:6 SLOPE, 30"PIPE	EA	3		$0.00
430610123	U-ENDWALL, STD 261, 1:4 SLOPE, 15"PIPE	EA	3		$0.00

430610125	U-ENDWALL, STD 261, 1:4 SLOPE, 18"PIPE	EA	3		$0.00
430610129	U-ENDWALL, STD 261, 1:4 SLOPE, 24"PIPE	EA	3		$0.00
430610133	U-ENDWALL, STD 261, 1:4 SLOPE, 30"PIPE	EA	3		$0.00
430610223	U-ENDWALL, STD 261, 1:3 SLOPE, 15"PIPE	EA	3		$0.00
430610225	U-ENDWALL, STD 261, 1:3 SLOPE, 18"PIPE	EA	3		$0.00
430610229	U-ENDWALL, STD 261, 1:3 SLOPE, 24"PIPE	EA	3		$0.00
430610233	U-ENDWALL, STD 261, 1:3 SLOPE, 30"PIPE	EA	3		$0.00
430610323	U-ENDWALL, STD 261, 1:2 SLOPE, 15"PIPE	EA	3		$0.00
430610325	U-ENDWALL, STD 261, 1:2 SLOPE, 18"PIPE	EA	3		$0.00
430610329	U-ENDWALL, STD 261,1:2 SLOPE, 24"PIPE	EA	3		$0.00
430611023	U-ENDWALL, STD 261, BAFFLES, 1:6 SLOPE, 15"PIPE	EA	3		$0.00
430611025	U-ENDWALL, STD 261, BAFFLES, 1:6 SLOPE, 18"PIPE	EA	3		$0.00
430611029	U-ENDWALL, STD 261, BAFFLES, 1:6 SLOPE, 24"PIPE	EA	3		$0.00
430611033	U-ENDWALL, STD 261, BAFFLES, 1:6 SLOPE, 30"PIPE	EA	3		$0.00
430611123	U-ENDWALL WITH BAFFLES, STD 261, 1:4 SLOPE, 15"PIPE	EA	3		$0.00
430611125	U-ENDWALL WITH BAFFLES, STD 261, 1:4 SLOPE, 18"PIPE	EA	3		$0.00
430611129	U-ENDWALL WITH BAFFLES, STD 261, 1:4 SLOPE, 24"PIPE	EA	3		$0.00
430611133	U-ENDWALL WITH BAFFLES,STD 261,1:4 SLOPE,30"PIPE	EA	3		$0.00
430611223	U-ENDWALL WITH BAFFLES, STD 261, 1:3 SLOPE, 15"PIPE	EA	3		$0.00
430611225	U-ENDWALL WITH BAFFLES, STD 261, 1:3 SLOPE, 18"PIPE	EA	3		$0.00
430611229	U-ENDWALL WITH BAFFLES, STD 261, 1:3 SLOPE, 24"PIPE	EA	3		$0.00
430611233	U-ENDWALL, STD 261, BAFFLES, 1:3 SLOPE, 30"PIPE	EA	3		$0.00
430611323	U-ENDWALL WITH BAFFLES, STD 261, 1:2 SLOPE, 15"PIPE	EA	3		$0.00
430611325	U-ENDWALL WITH BAFFLES, STD 261, 1:2 SLOPE, 18"PIPE	EA	3		$0.00
430611329	U-ENDWALL WITH BAFFLES, STD 261, 1:2 SLOPE, 24"PIPE	EA	3		$0.00
430611333	U-ENDWALL, BAFFLES, STD 261, 1:2 SLOPE, 30"PIPE	EA	3		$0.00
430612023	U-ENDWALL WITH GRATE, STD 261, 1:6 SLOPE, 15"	EA	3		$0.00
430612025	U-ENDWALL WITH GRATE, STD 261, 1:6 SLOPE, 18"PIPE	EA	3		$0.00
430612029	U-ENDWALL WITH GRATE, STD 261, 1:6 SLOPE, 24"PIPE	EA	3		$0.00

430612033	U-ENDWALL WITH GRATE, STD 261, 1:6 SLOPE, 30"	EA	3		$0.00
430612125	U-ENDWALL WITH GRATE, STD 261, 1:4 SLOPE, 18"PIPE	EA	3		$0.00
430612129	U-ENDWALL WITH GRATE, STD 261, 1:4 SLOPE, 24"PIPE	EA	3		$0.00
430612133	U-ENDWALL, GRATE, STD 261, 1:4 SLOPE, 30" PIPE	EA	3		$0.00
430612329	U-ENDWALL WITH GRATE, STD 261, 1:2 SLOPE, 24"PIPE	EA	3		$0.00
430612333	U-ENDWALL, GRATE, STD 261, 1:2 SLOPE, 30" PIPE	EA	3		$0.00
430613025	U-ENDWALL, WITH BAFFLES & GRATE, STD 261,1:6 SLOPE, 18"	EA	3		$0.00
430613029	U-ENDWALL, WITH BAFFLES & GRATE, STD 261,1:6 SLOPE, 24"PIPE	EA	3		$0.00
430613033	U-ENDWALL, WITH BAFFLES & GRATE, STD 261,1:6 SLOPE, 30"	EA	3		$0.00
430613123	U-ENDWALL, WITH BAFFLES & GRATE, STD 261,1:4 SLOPE,15"PIPE	EA	3		$0.00
430613125	U-ENDWALL, WITH BAFFLES & GRATE, STD 261,1:4 SLOPE,18"PIPE	EA	3		$0.00
430613129	U-ENDWALL, WITH BAFFLES & GRATE, STD 261,1:4 SLOPE, 24"PIPE	EA	3		$0.00
430613133	U-ENDWALL, WITH BAFFLES & GRATE, STD 261,1:4 SLOPE,30"PIPE	EA	3		$0.00
430613225	U-ENDWALL, WITH BAFFLES & GRATE, STD 261,1:3 SLOPE,18"PIPE	EA	3		$0.00
430613229	U-ENDWALL, WITH BAFFLES & GRATE, STD 261,1:3 SLOPE, 24 "PIPE	EA	3		$0.00
430613233	U-ENDWALL, WITH BAFFLES & GRATE, STD 261,1:3 SLOPE,30"PIPE	EA	3		$0.00
430613325	U-ENDWALL, WITH BAFFLES & GRATE, STD 261,1:2 SLOPE,18"PIPE	EA	3		$0.00
430613333	U-ENDWALL, WITH BAFFLES & GRATE, STD 261,1:2 SLOPE,30"PIPE	EA	3		$0.00
430830	PIPE FILLING AND PLUGGING- PLACE OUT OF SERVICE	CY	20		$0.00
430950	DESILTING CONCRETE BOX CULVERT	CY	20		$0.00
0430963 1	PVC PIPE FOR BACK OF SIDEWALK, 4"	LF	50		$0.00
430982120	MITERED END SECTION, OPTIONAL ROUND, 8" CD	EA	3		$0.00
430982121	MITERED END SECTION, OPTIONAL ROUND, 12" CD	EA	3		$0.00
430982123	MITERED END SECTION, OPTIONAL ROUND, 15" CD	EA	3		$0.00
430982125	MITERED END SECTION, OPTIONAL ROUND, 18" CD	EA	3		$0.00
430982129	MITERED END SECTION, OPTIONAL ROUND, 24" CD	EA	3		$0.00
430982133	MITERED END SECTION, OPTIONAL ROUND, 30" CD	EA	3		$0.00
430982138	MITERED END SECTION, OPTIONAL ROUND, 36" CD	EA	3		$0.00
430982140	MITERED END SECTION, OPTIONAL ROUND, 42" CD	EA	3		$0.00

430982141	MITERED END SECTION, OPTIONAL ROUND, 48" CD	EA	3		$0.00
430982142	MITERED END SECTION, OPTIONAL ROUND, 54" CD	EA	3		$0.00
430982143	MITERED END SECTION, OPTIONAL ROUND, 60" CD	EA	3		$0.00
430982144	MITERED END SECTION, OPTIONAL ROUND, 66" CD	EA	3		$0.00
430982145	MITERED END SECTION, OPTIONAL ROUND, 72" CD	EA	3		$0.00
430982147	MITERED END SECTION, OPTIONAL ROUND, 84" CD	EA	3		$0.00
430982623	MITERED END SECTION, OPTIONAL - ELLIPTICAL / ARCH, 15" CD	EA	3		$0.00
430982625	MITERED END SECTION, OPTIONAL - ELLIPTICAL / ARCH, 18" CD	EA	3		$0.00
430982629	MITERED END SECTION, OPTIONAL - ELLIPTICAL / ARCH, 24" CD	EA	3		$0.00
430982633	MITERED END SECTION, OPTIONAL - ELLIPTICAL / ARCH, 30" CD	EA	3		$0.00
430982638	MITERED END SECTION, OPTIONAL - ELLIPTICAL / ARCH, 36" CD	EA	3		$0.00
430982640	MITERED END SECTION, OPTIONAL - ELLIPTICAL / ARCH, 42" CD	EA	3		$0.00
430982641	MITERED END SECTION, OPTIONAL - ELLIPTICAL / ARCH, 48" CD	EA	3		$0.00
430982642	MITERED END SECTION, OPTIONAL - ELLIPTICAL / ARCH, 54" CD	EA	3		$0.00
430982643	MITERED END SECTION, OPTIONAL - ELLIPTICAL / ARCH, 60" CD	EA	3		$0.00
430982645	MITERED END SECTION, OPTIONAL - ELLIPTICAL / ARCH, 72" CD	EA	3		$0.00
430984120	MITERED END SECTION, OPTIONAL ROUND, 8" SD	EA	3		$0.00
430984121	MITERED END SECTION, OPTIONAL ROUND, 12" SD	EA	3		$0.00
430984123	MITERED END SECTION, OPTIONAL ROUND, 15" SD	EA	3		$0.00
430984125	MITERED END SECTION, OPTIONAL ROUND, 18" SD	EA	3		$0.00
430984129	MITERED END SECTION, OPTIONAL ROUND, 24" SD	EA	3		$0.00
430984133	MITERED END SECTION , OPTIONAL ROUND, 30" SD	EA	3		$0.00
430984138	MITERED END SECTION , OPTIONAL ROUND, 36" SIDE DRAIN	EA	3		$0.00
430984140	MITERED END SECTION , OPTIONAL ROUND, 42" SD	EA	3		$0.00
430984141	MITERED END SECTION , OPTIONAL ROUND, 48" SD	EA	3		$0.00
430984142	MITERED END SECTION , OPTIONAL ROUND, 54" SD	EA	3		$0.00
430984143	MITERED END SECTION , OPTIONAL ROUND, 60" SD	EA	3		$0.00
430984144	MITERED END SECTION, OPTIONAL ROUND, 66" SIDE DRAIN	EA	3		$0.00
430984145	MITERED END SECTION, OPTIONAL ROUND, 72" SIDE DRAIN	EA	3		$0.00

430984147	MITERED END SECTION, OPTIONAL ROUND, 84" SD	EA	3		$0.00
430984623	MITERED END SECTION, OPTIONAL OTHER - ELLIP/ARCH, 15" SD	EA	3		$0.00
430984625	MITERED END SECT, OPTIONAL - ELLIPTICAL / ARCH, 18" SD	EA	3		$0.00
430984629	MITERED END SECT, OPTIONAL - ELLIPTICAL / ARCH, 24" SD	EA	3		$0.00
430984633	MITERED END SECT, OPTIONAL /ELLIP/ARCH, 30" SD	EA	3		$0.00
430984638	MITERED END SECT, OPTIONAL /ELLIP/ARCH, 36" SD	EA	3		$0.00
430984640	MITERED END SECT, OPTIONAL /ELLIP/ARCH, 42" SD	EA	3		$0.00
430984641	MITERED END SECT, OPTIONAL /ELLIP/ARCH, 48" SD	EA	3		$0.00
430984642	MITERED END SECT, OPTIONAL /ELLIP/ARCH, 54" SD	EA	3		$0.00
430984643	MITERED END SECTION, OPTIONAL SHAPE /ELLIP/ARCH, 60" SIDE DRAIN	EA	3		$0.00
430984644	MITERED END SECT, OPTIONAL /ELLIP/ARCH, 66" SD	EA	3		$0.00
430984645	MITERED END SECT, OPTIONAL /ELLIP/ARCH, 72" SD	EA	3		$0.00
430990	MITERED END SECT, REPLACE GRATE	EA	3		$0.00
0431 1 1	PIPE LINER, OPTIONAL MATERIAL, 0-24"	LF	50		$0.00
0431 1 2	PIPE LINER, OPTIONAL MATERIAL, 25-36"	LF	50		$0.00
0431 1 3	PIPE LINER, OPTIONAL MATERIAL, 37-48"	LF	50		$0.00
0431 1 4	PIPE LINER, OPTIONAL MATERIAL, 49 - 60"	LF	50		$0.00
0431 1 5	PIPE LINER, OPTIONAL MATERIAL, 61" AND GREATER	LF	50		$0.00
0436 1 1	TRENCH DRAIN, STANDARD	LF	50		$0.00
0440 1 10	UNDERDRAIN, TYPE I	LF	50		$0.00
0440 1 20	UNDERDRAIN, TYPE II	LF	50		$0.00
0440 1 30	UNDERDRAIN, TYPE III	LF	50		$0.00
0440 1 50	UNDERDRAIN, TYPE V	LF	50		$0.00
0440 70	UNDERDRAIN INSPECTION BOX	EA	5		$0.00
0440 73 1	UNDERDRAIN OUTLET PIPE, 4"	LF	50		$0.00
0440 73 2	UNDERDRAIN OUTLET PIPE, 6"	LF	50		$0.00
0440 73 3	UNDERDRAIN OUTLET PIPE, 8"	LF	50		$0.00
0440 73 4	UNDERDRAIN OUTLET PIPE, 10"	LF	50		$0.00
0440 73 5	UNDERDRAIN OUTLET PIPE, 12"	LF	50		$0.00

0443 70 3	FRENCH DRAIN, 18"	LF	50		$0.00
0443 70 4	FRENCH DRAIN, 24"	LF	50		$0.00
0443 70 5	FRENCH DRAIN, 30"	LF	50		$0.00
0443 70 6	FRENCH DRAIN, 36"	LF	50		$0.00
0443 70 7	FRENCH DRAIN, 42"	LF	50		$0.00
0443 70 8	FRENCH DRAIN, 48"	LF	50		$0.00
0443 70 9	FRENCH DRAIN, 54"	LF	50		$0.00
0443 70 10	FRENCH DRAIN, 60"	LF	50		$0.00
0443 72 10	FRENCH DRAIN- AGGREGATE WITHOUT PIPE, 0-0.9’ DEPTH	SY	10		$0.00
0443 72 11	FRENCH DRAIN- AGGREGATE WITHOUT PIPE, 1-1.9’ DEPTH	SY	10		$0.00
0443 72 12	FRENCH DRAIN- AGGREGATE WITHOUT PIPE, 2-2.9’ DEPTH	SY	10		$0.00
0443 72 13	FRENCH DRAIN- AGGREGATE WITHOUT PIPE, 3-3.9’ DEPTH	SY	10		$0.00
0443 72 14	FRENCH DRAIN- AGGREGATE WITHOUT PIPE, 4-4.9’ DEPTH	SY	10		$0.00
0446 1 1	EDGEDRAIN DRAINCRETE, STANDARD	LF	50		$0.00
0446 71 1	EDGEDRAIN OUTLET PIPE, 4"	LF	50		$0.00
0515 1 1	PIPE HANDRAIL - GUIDERAIL, STEEL	LF	50		$0.00
0515 1 2	PIPE HANDRAIL - GUIDERAIL, ALUMINUM	LF	50		$0.00
0515 1 41	PIPE HANDRAIL - GUIDERAIL, RELOCATE, STEEL	LF	50		$0.00
0515 1 42	PIPE HANDRAIL - GUIDERAIL, RELOCATE, ALUMINUM	LF	50		$0.00
0515 2111	PEDESTRIAN / BICYCLE RAILING, NS, 42" TYPE 1	LF	50		$0.00
0515 2211	PEDESTRIAN / BICYCLE RAILING, STEEL, 42" TYPE 1	LF	50		$0.00
0515 2212	PEDESTRIAN / BICYCLE RAILING, STEEL, 42" TYPE 2	LF	50		$0.00
0515 2213	PEDESTRIAN / BICYCLE RAILING, STEEL, 42" TYPE 3	LF	50		$0.00
0515 2221	PEDESTRIAN/ BICYCLE RAILING, STEEL ONLY,54" TYPE 1	LF	50		$0.00
0515 2231	PEDESTRIAN/ BICYCLE RAILING, STEEL ONLY,48" TYPE 1	LF	50		$0.00
0515 2311	PEDESTRIAN/ BICYCLE RAILING, ALUMINUM ONLY,42" TYPE 1	LF	50		$0.00
0515 2312	PEDESTRIAN / BICYCLE RAILING, ALUMINUM, 42" TYPE 2	LF	50		$0.00
0515 2313	PEDESTRIAN / BICYCLE RAILING, ALUMINUM, 42" TYPE 3	LF	50		$0.00
0515 2321	PEDESTRIAN/ BICYCLE RAILING, ALUMINUM ONLY,54" TYPE 1	LF	50		$0.00

0515 2411	PEDESTRIAN / BICYCLE RAILING, SPECIAL MATERIALS- WEATHERING STEEL, 42" TYPE 1	LF	50		$0.00
0515 2500	PEDESTRIAN / BICYCLE RAILING, RELOCATE	LF	50		$0.00
0519 78	BOLLARDS	EA	10		$0.00
0520 1 7	CONCRETE CURB & GUTTER, TYPE E	LF	1000		$0.00
0520 1 10	CONCRETE CURB & GUTTER, TYPE F	LF	5000		$0.00
0520 1 11	CONCRETE CURB & GUTTER, VARIABLE HEIGHT TYPE F	LF	100		$0.00
0520 1 12	CONCRETE CURB & GUTTER, TYPE F WITH SPECIAL GUTTER PROFILE	LF	100		$0.00
0520 2 1	CONCRETE CURB, TYPE A	LF	100		$0.00
0520 2 2	CONCRETE CURB, TYPE B	LF	1000		$0.00
0520 2 4	CONCRETE CURB, TYPE D	LF	1000		$0.00
0520 3	VALLEY GUTTER- CONCRETE	LF	100		$0.00
0520 5 11	TRAFFIC SEPARATOR CONCRETE - TYPE I, 4' WIDE	LF	50		$0.00
0520 5 12	TRAFFIC SEPARATOR CONCRETE - TYPE I, 6' WIDE	LF	50		$0.00
520 5 16	TRAFFIC SEPARATOR CONCRETE- TYPE I, 8.5' WIDE	LF	50		$0.00
0520 5 21	TRAFFIC SEPARATOR - CONCRETE, TYPE II, 4' WIDE	LF	50		$0.00
0520 5 22	TRAFFIC SEPARATOR - CONCRETE, TYPE II, 6' WIDE	LF	50		$0.00
0520 5 26	TRAFFIC SEPARATOR CONCRETE- TYPE II, 8.5' WIDE	LF	50		$0.00
0520 5 41	TRAFFIC SEPARATOR CONCRETE, TYPE IV, 4' WIDE	LF	50		$0.00
0520 5 42	TRAFFIC SEPARATOR CONCRETE, TYPE IV, 6' WIDE	LF	50		$0.00
0520 5 46	TRAFFIC SEPARATOR CONCRETE, TYPE IV, 8.5' WIDE	LF	50		$0.00
0520 5 51	TRAF SEP CONC, TYPE V, 4' WIDE	LF	50		$0.00
0520 6	SHOULDER GUTTER- CONCRETE	LF	50		$0.00
0520 70	CONCRETE TRAFFIC SEPARATOR, SPECIAL - VARIABLE WIDTH	SY	50		$0.00
0521 72 2	SHOULDER CONCRETE BARRIER WALL, BOX CULVERT	LF	100		$0.00
0521 72 3	SHOULDER CONCRETE BARRIER WALL, RIGID-SHOULDER	LF	100		$0.00
0521 72 4	SHOULDER CONCRETE BARRIER WALL, RIGID RETAINING	LF	100		$0.00
0521 72 5	SHOULDER CONCRETE BARRIER WALL, RIGID-CURB & GUTTER	LF	100		$0.00
0521 72 10	SHOULDER CONCRETE BARRIER WALL, RIGID SHOULDER 42"	LF	100		$0.00
0521 72 11	SHOULDER CONCRETE BARRIER WALL, RIGID SHOULDER 54"	LF	100		$0.00

0521 73	CONCRETE BARRIER WALL, REMOVAL	LF	20		$0.00
0522 1	CONCRETE SIDEWALK AND DRIVEWAY, 4" THICK	SY	3000		$0.00
0522 2	CONCRETE SIDEWALK AND DRIVEWAY, 6" THICK	SY	500		$0.00
0522 3	BUS BOARDING PAD - CONCRETE	SY	50		$0.00
0522 4	BUS SHELTER PAD - CONCRETE	SY	50		$0.00
0524 1 1	CONCRETE DITCH PAVT, NON REINFORCED, 3"	SY	10		$0.00
0524 1 2	CONCRETE DITCH PAVEMENT, NON REINFORCED, 4"	SY	10		$0.00
0524 1 3	CONCRETE DITCH PAVEMENT, NON REINFORCED, 5"	SY	10		$0.00
0524 1 4	CONCRETE DITCH PAVEMENT, NON REINFORCED, 6"	SY	10		$0.00
0524 1 19	CONCRETE DITCH PAVT, 3", REINFORCED	SY	10		$0.00
0524 1 29	CONCRETE DITCH PAVEMENT, 4", REINFORCED	SY	10		$0.00
0524 1 49	CONCRETE DITCH PAVEMENT, 6", REINFORCED	SY	10		$0.00
0524 2 1	CONCRETE SLOPE PAVEMENT,NON REINFORCED, 3"	SY	10		$0.00
0524 2 2	CONCRETE SLOPE PAVEMENT,NON REINFORCED, 4"	SY	10		$0.00
0524 2 4	CONCRETE SLOPE PAVEMENT,NON REINFORCED, 6"	SY	10		$0.00
0524 2 29	CONCRETE SLOPE PAVEMENT, 4", REINFORCED	SY	10		$0.00
0524 2 49	CONCRETE SLOPE PAVEMENT, 6", REINFORCED	SY	10		$0.00
0524 3	CONC CORE DITCH BLOCKS	CY	10		$0.00
0526 1 1	PAVERS, ARCHITECTURAL, ROADWAY	SY	50		$0.00
0526 1 2	PAVERS, ARCHITECTURAL, SIDEWALK	SY	50		$0.00
0527 2	DETECTABLE WARNINGS	SF	1000		$0.00
0530 1	RIPRAP, SAND-CEMENT	CY	50		$0.00
0530 3 3	RIPRAP- RUBBLE, BANK AND SHORE	TN	10		$0.00
0530 3 4	RIPRAP, RUBBLE, F&I, DITCH LINING	TN	10		$0.00
0530 3 5	RIPRAP- RUBBLE, COASTAL SHORE- LARGE BOULDERS	TN	10		$0.00
0530 74	BEDDING STONE	TN	10		$0.00
0536 1 0	GUARDRAIL -ROADWAY, GENERAL TL-2	LF	250		$0.00
0536 1 1	GUARDRAIL -ROADWAY, GENERAL TL-3	LF	250		$0.00
0536 1 3	GUARDRAIL ROADWAY, DOUBLE FACE	LF	250		$0.00

0536 1 11	GUARDRAIL, ROADWAY, MODIFIED THRIE BEAM	LF	250		$0.00
0536 1 12	GUARDRAIL ROADWAY, MODIFIED THRIE BEAM-DOUBLE FACE	LF	250		$0.00
0536 5 1	RUB RAIL FOR GUARDRAIL, SINGLE SIDED	LF	250		$0.00
0536 5 2	RUB RAIL FOR GUARDRAIL, DOUBLE SIDED	LF	250		$0.00
0536 7 1	SPECIAL GUARDRAIL POST- DEEP POST FOR SLOPE BREAK CONDITION-TIMBER OR STEEL	EA	5		$0.00
0536 7 2	SPECIAL GUARDRAIL POST- SPECIAL STEEL POST FOR CONCRETE STRUCTURE MOUNT	EA	5		$0.00
0536 7 3	SPECIAL GUARDRAIL POST- ENCASED POST FOR SHALLOW MOUNT	EA	5		$0.00
0536 7 4	SPECIAL GUARDRAIL POST- FRANGIBLE LEAVE-OUT FOR MOUNTING THROUGH CONCRETE SURFACE	EA	5		$0.00
0536 8 11	APPROACH TRANSITION TO RIGID BARRIER- BRIDGE ANCHORAGE ASSEMBLY CONNECTION, FURNISH & INSTALL	EA	5		$0.00
0536 8 12	APPROACH TRANSITION CONNECTION TO RIGID BARRIER, FURNISH AND INSTALL, TL-2	EA	5		$0.00
0536 8 13	APPROACH TRANSITION CONNECTION TO RIGID BARRIER, FURNISH AND INSTALL, TL-3	EA	5		$0.00
0536 8 40	APPROACH TRANSITION TO RIGID BARRIER- BRIDGE ANCHORAGE ASSEMBLY, RELOCATE	EA	5		$0.00
0536 8 60	APPROACH TRANSITION TO RIGID BARRIER- BRIDGE ANCHORAGE ASSEMBLY, REMOVE	EA	5		$0.00
0536 73	GUARDRAIL REMOVAL	LF	25		$0.00
0536 85 22	GUARDRAIL END ANCHORAGE ASSEMBLY/END TREATMENT- FLARED	EA	2		$0.00
0536 85 24	GUARDRAIL END ANCHORAGE ASSEMBLY/END TREATMENT- PARALLEL	EA	2		$0.00
0536 85 25	GUARDRAIL END ANCHORAGE ASSEMBLY/END TREATMENT- TYPE II	EA	2		$0.00
0536 85 26	GUARDRAIL END ANCHORAGE ASSEMBLY/END TREATMENT- TYPE CRT	EA	2		$0.00
0536 85 27	GUARDRAIL END ANCHORAGE ASSEMBLY/END TREATMENT- DOUBLE FACE TERMINAL	EA	2		$0.00
0538 1	GUARDRAIL- RESET	LF	25		$0.00
0539 80111	OPAQUE VISUAL BARRIER, F&I, CONCRETE, 2' 3"	LF	25		$0.00
0544 74 40	RELOCATE CRASH CUSHION - ALL OPTIONS	EA	2		$0.00
0544 75 1	CRASH CUSHION	EA	2		$0.00
0546 71	RUMBLE STRIPS	PS	10		$0.00
0546 72 52	RUMBLE STRIPS, GROUND-IN, 16" CENTERLINE USED WITH RUMBLE STRIPE	GM	1		$0.00
0546 72 53	RUMBLE STRIPS, GROUND-IN, 8" EDGELINE USED WITH RUMBLE STRIPE	GM	1		$0.00
0546 72 55	RUMBLE STRIPS, GROUND-IN, 16" SHOULDER	GM	1		$0.00
0550 10110	FENCING, TYPE A, 0.0-5.0', STANDARD	LF	25		$0.00
0550 10118	FENCING, TYPE A, 0.0-5.0', TYPE A STANDARD, RESET EXISTING	LF	25		$0.00

0550 10119	FENCING, TYPE A, 0.0-5.0', SPECIAL FEATURES	LF	25		$0.00
0550 10120	FENCING, TYPE A, 5.1-6.0, STANDARD	LF	25		$0.00
0550 10128	FENCING, TYPE A, 5.1-6.0', RESET EXISTING	LF	25		$0.00
0550 10130	FENCING, TYPE A, 6.1-7.0, STANDARD	LF	25		$0.00
0550 10140	FENCING, TYPE A, 7.1-8.0', STANDARD	LF	25		$0.00
0550 10148	FENCING, TYPE A, 7.1-8.0', RESET EXISTING	LF	25		$0.00
0550 10149	FENCING, TYPE A, 7.1-8.0', SPECIAL FEATURES	LF	25		$0.00
0550 10150	FENCING, TYPE A, 8.1-10.0', STANDARD	LF	25		$0.00
0550 10158	FENCING, TYPE A, 8.1-10.0', RESET EXISTING	LF	25		$0.00
0550 10159	FENCING, TYPE A, 8.1-10.0', SPECIAL FEATURES	LF	25		$0.00
0550 10169	FENCING, TYPE A, 10.1-12.0', SPECIAL FEATURES	LF	25		$0.00
0550 10210	FENCING, TYPE B, 0.0-5.0', STANDARD FEATURES	LF	25		$0.00
0550 10212	FENCING, TYPE B, 0.5-5.0', W/ VINYL COATING	LF	25		$0.00
0550 10218	FENCING, TYPE B, 0.0-5.0', RESET EXISTING	LF	25		$0.00
0550 10219	FENCING, TYPE B, 0.0-5.0', SPECIAL FEATURES	LF	25		$0.00
0550 10220	FENCING, TYPE B, 5.1-6.0', STANDARD	LF	25		$0.00
0550 10221	FENCING, TYPE B, 5.1-6.0', W/ BARB WIRE ATTMT	LF	25		$0.00
0550 10222	FENCING, TYPE B, 5.1-6.0, W/ VINYL COATING	LF	25		$0.00
0550 10228	FENCING, TYPE B, 5.1-6.0, RESET EXISTING	LF	25		$0.00
0550 10229	FENCING, TYPE B, 5.1-6.0, SPECIAL FEATURES	LF	25		$0.00
0550 10230	FENCING, TYPE B, 6.1-7.0', STANDARD	LF	25		$0.00
0550 10231	FENCING, TYPE B, 6.1-7.0, W/ BARB WIRE ATTMT	LF	25		$0.00
0550 10232	FENCING, TYPE B, 6.1-7.0, W/ VINYL COATING	LF	25		$0.00
0550 10238	FENCING, TYPE B, 6.1-7.0, RESET EXISTING	LF	25		$0.00
0550 10240	FENCING, TYPE B, 7.1-8.0', STANDARD	LF	25		$0.00
0550 10242	FENCING, TYPE B, 7.1-8.0', VINYL COATING	LF	25		$0.00
0550 10248	FENCING, TYPE B, 7.1-8.0, RESET EXISTING	LF	25		$0.00
0550 10250	FENCING, TYPE B, 8.1-10.0', STANDARD FEATURES	LF	25		$0.00
0550 10251	FENCING, TYPE B, 8.1-10.0', WITH BARBED WIRE ATTMT	LF	25		$0.00

0550 10252	FENCING, TYPE B, 8.1-10.0', VINYL COATING	LF	25		$0.00
0550 10256	FENCING, TYPE B, 8-10.0', WITH VINYL COATING AND BARBED WIRE ATTACHMENT	LF	25		$0.00
0550 10258	FENCING, TYPE B, 8.1-10.0', RESET EXISTING FENCE	LF	25		$0.00
0550 10259	FENCING, TYPE B, 8.1-10.0', SPECIAL	LF	25		$0.00
0550 10266	FENCING, TYPE B, 10.1-12.0', WITH VINYL COATING AND BARBED WIRE ATTACHMENT	LF	25		$0.00
0550 10315	FENCING, TYPE R, 0-5.0', VERTICAL	LF	25		$0.00
0550 10325	FENCING, TYPE R, 5.1-6.0', VERTICAL	LF	25		$0.00
0550 10335	FENCING, TYPE R, 6.1-7.0', VERTICAL	LF	25		$0.00
0550 10343	FENCING, TYPE R, 7.1-8.0, W/FULL ENCLOSURE	LF	25		$0.00
0550 10344	FENCING, TYPE R, 7.1-8.0, W / PARTIAL ENCLOSURE	LF	25		$0.00
0550 10353	FENCING, TYPE R, 8.1 - 10.0', WITH FULL ENCLOSURE	LF	25		$0.00
0550 10354	FENCING, TYPE R, 8.1-10.0', WITH PARTIAL ENCLOSURE, TYPE R ONLY	LF	25		$0.00
0550 10355	FENCING, TYPE R, 8.1-10.0', VERTICAL	LF	25		$0.00
0550 10363	FENCING, TYPE R, GREATER THAN 10.0', WITH FULL ENCLOSURE	LF	25		$0.00
0570 1 2	PERFORMANCE TURF, SOD	SY	1500		$0.00
0571 1 11	PLASTIC EROSION MAT, TURF REINFORCED MAT, TYPE 1	SY	100		$0.00
0571 1 12	PLASTIC EROSION MAT, TRM, TYPE 2	SY	100		$0.00
0571 1 13	PLASTIC EROSION MAT, TURF REINFORCED MAT, TYPE 3	SY	100		$0.00
0591 1 2	4" LANDSCAPE SLEEVE (UNDERGROUND)	LF	50		$0.00
0591 1 2A	4" LANDSCAPE SLEEVE (BORED)	LF	50		$0.00
0630 2 11	CONDUIT, FURNISH & INSTALL, OPEN TRENCH	LF	1000		$0.00
0630 2 12	CONDUIT, FURNISH & INSTALL, DIRECTIONAL BORE	LF	1000		$0.00
0630 2 14	CONDUIT, FURNISH & INSTALL, ABOVEGROUND	LF	1000		$0.00
0630 2 15	CONDUIT, FURNISH & INSTALL, BRIDGE MOUNT	LF	100		$0.00
0630 2 65	CONDUIT, REMOVE, BRIDGE MOUNT	LF	100		$0.00
0654 001	RECTANGULAR RAPID FLASHING BEACON ASSEMBLY	EA	2		$0.00
0660 2101	LOOP ASSEMBLY- F&I, TYPE A	AS	20		$0.00
0660 2102	LOOP ASSEMBLY, F&I, TYPE B	AS	20		$0.00
0660 2103	LOOP ASSEMBLY, F&I, TYPE C	AS	20		$0.00

0660 2104	LOOP ASSEMBLY, F&I, TYPE D	AS	20		$0.00
0660 2105	LOOP ASSEMBLY, F&I, TYPE E	AS	20		$0.00
0660 2106	LOOP ASSEMBLY, F&I, TYPE F	AS	20		$0.00
0660 2107	LOOP ASSEMBLY, F&I, TYPE G	AS	20		$0.00
0660 3 11	VEHICLE DETECTION SYSTEM- MICROWAVE, FURNISH & INSTALL CABINET EQUIPMENT	EA	5		$0.00
0660 3 12	VEHICLE DETECTION SYSTEM- MICROWAVE, FURNISH & INSTALL, ABOVE GROUND EQUIPMENT	EA	5		$0.00
0700 1 11	SINGLE POST SIGN, F&I GROUND MOUNT, UP TO 12 SF	AS	50		$0.00
0700 1 12	SINGLE POST SIGN, F&I GROUND MOUNT, 12-20 SF	AS	20		$0.00
0700 1 13	SINGLE POST SIGN, F&I GROUND MOUNT, 21-30 SF	AS	5		$0.00
0700 1 14	SINGLE POST SIGN, F&I GROUND MOUNT, 31+ SF	AS	5		$0.00
0700 1 18	SINGLE POST SIGN, F&I GROUND MOUNT, IN-STREET FLEXIBLE POST	AS	5		$0.00
0700 1 21	SINGLE POST SIGN, F&I BARRIER MOUNT INDEX 11871 UP TO 12 SF	AS	5		$0.00
0700 1 22	SINGLE POST SIGN, F&I BARRIER MOUNT INDEX 11871 12-20 SF	AS	5		$0.00
0700 1 23	SINGLE POST SIGN, F&I BARRIER MOUNT INDEX 11871, 21-30 SF SHEETING AREA- BACK TO BACK	AS	5		$0.00
0700 1 31	SINGLE POST SIGN, F&I BRIDGE MOUNT INDEX 11870, UP TO 12 SF	AS	5		$0.00
0700 1 32	SINGLE POST SIGN, F&I BRIDGE MOUNT INDEX 11870, 12-20 SF	AS	5		$0.00
0700 1 33	SINGLE POST SIGN, F&I BRIDGE MOUNT INDEX 11870, 21-30 SF	AS	5		$0.00
0700 1 40	SINGLE POST SIGN, INSTALL	AS	5		$0.00
0700 1 50	SINGLE POST SIGN, RELOCATE	AS	10		$0.00
0700 1 60	SINGLE POST SIGN, REMOVE	AS	50		$0.00
0700 1 74	SINGLE POST SIGN, F&I CUSTOM, 31+ SF	AS	5		$0.00
0700 2 11	MULTI- POST SIGN, F&I GROUND MOUNT, UP TO 12 SF	AS	5		$0.00
0700 2 12	MULTI- POST SIGN, F&I GROUND MOUNT, 12-20 SF	AS	5		$0.00
0700 2 13	MULTI- POST SIGN, F&I GROUND MOUNT, 21-30 SF	AS	5		$0.00
0700 2 14	MULTI- POST SIGN, F&I GROUND MOUNT, 31-50 SF	AS	5		$0.00
0700 2 15	MULTI- POST SIGN, F&I GROUND MOUNT, 51-100 SF	AS	5		$0.00
0700 2 16	MULTI- POST SIGN, F&I GROUND MOUNT, 101-200 SF	AS	5		$0.00
0700 2 40	MULTI- POST SIGN, INSTALL	AS	5		$0.00
0700 2 50	MULTI- POST SIGN, F&I GROUND MOUNT, RELOCATE	AS	5		$0.00

0700 2 60	MULTI- POST SIGN, F&I GROUND MOUNT, REMOVE	AS	5		$0.00
0700 2 80	MULTI- POST SIGN, F&I GROUND MOUNT, REPAIR	AS	5		$0.00
0700 3101	SIGN PANEL, FURNISH & INSTALL GROUND MOUNT, UP TO 12 SF	EA	5		$0.00
0700 3102	SIGN PANEL, FURNISH & INSTALL GROUND MOUNT, 12-20 SF	EA	5		$0.00
0700 3103	SIGN PANEL, FURNISH & INSTALL GROUND MOUNT, 21-30 SF	EA	5		$0.00
0700 3104	SIGN PANEL, FURNISH & INSTALL GROUND MOUNT, 31-50 SF	EA	5		$0.00
0700 3105	SIGN PANEL, FURNISH & INSTALL GROUND MOUNT, 51-100 SF	EA	5		$0.00
0700 3106	SIGN PANEL, FURNISH & INSTALL GROUND MOUNT, 101-200 SF	EA	5		$0.00
0700 3201	SIGN PANEL, FURNISH & INSTALL OVERHEAD MOUNT, UP TO 12 SF	EA	5		$0.00
0700 3202	SIGN PANEL, FURNISH & INSTALL OVERHEAD MOUNT, 12-20 SF	EA	5		$0.00
0700 3203	SIGN PANEL, FURNISH & INSTALL OVERHEAD MOUNT, 21-30 SF	EA	5		$0.00
0700 3204	SIGN PANEL, FURNISH & INSTALL OVERHEAD MOUNT, 31-50 SF	EA	5		$0.00
0700 3205	SIGN PANEL, FURNISH & INSTALL OVERHEAD MOUNT, 51-100 SF	EA	5		$0.00
0700 3206	SIGN PANEL, FURNISH & INSTALL OVERHEAD MOUNT, 101-200 SF	EA	5		$0.00
0700 3401	SIGN PANEL, INSTALL, UP TO 12 SF	EA	5		$0.00
0700 3402	SIGN PANEL, INSTALL, 12-20 SF	EA	5		$0.00
0700 3403	SIGN PANEL, INSTALL, 21-30 SF,	EA	5		$0.00
0700 3404	SIGN PANEL, INSTALL, 31-50 SF	EA	5		$0.00
0700 3405	SIGN PANEL, INSTALL, 51-100 SF,	EA	5		$0.00
0700 3406	SIGN PANEL, INSTALL, 101-200 SF	EA	5		$0.00
0700 3501	SIGN PANEL, RELOCATE, UP TO 12 SF	EA	5		$0.00
0700 3502	SIGN PANEL, RELOCATE, 12-20 SF	EA	5		$0.00
0700 3503	SIGN PANEL, RELOCATE, 21-30 SF	EA	5		$0.00
0700 3504	SIGN PANEL, RELOCATE, 31-50 SF	EA	5		$0.00
0700 3505	SIGN PANEL, RELOCATE, 51-100 SF	EA	5		$0.00
0700 3506	SIGN PANEL, RELOCATE, 101-200 SF	EA	5		$0.00
0700 3601	SIGN PANEL, REMOVE, UP TO 12 SF	EA	5		$0.00
0700 3602	SIGN PANEL, REMOVE, 12-20 SF	EA	5		$0.00
0700 3603	SIGN PANEL, REMOVE, 21-30 SF	EA	5		$0.00

0700 3604	SIGN PANEL, REMOVE, 31-50 SF	EA	5		$0.00
0700 3605	SIGN PANEL, REMOVE, 51-100 SF	EA	5		$0.00
0700 3606	SIGN PANEL, REMOVE, 101-200 SF	EA	5		$0.00
0700 3624	SIGN PANEL, REMOVE, UP TO 50 SF WITH LIGHTING	EA	5		$0.00
0700 3625	SIGN PANEL, REMOVE, 51-100 SF WITH LIGHTING	EA	5		$0.00
0700 3626	SIGN PANEL, REMOVE, 101-200 SF WITH LIGHTING	EA	5		$0.00
0700 12 11	SIGN BEACON, F&I GROUND MOUNT- AC POWERED, ONE BEACON	AS	5		$0.00
0700 12 12	SIGN BEACON, F&I GROUND MOUNT- AC POWERED, TWO BEACONS	AS	5		$0.00
0700 12 21	SIGN BEACON, F&I GROUND MOUNT- SOLAR POWERED, ONE BEACON	AS	5		$0.00
0700 12 22	SIGN BEACON, F&I GROUND MOUNT- SOLAR POWERED, TWO BEACONS	AS	5		$0.00
0700 12 31	SIGN BEACON, F&I OVERHEAD MOUNT, ONE BEACON	AS	5		$0.00
0700 12 32	SIGN BEACON, F&I OVERHEAD MOUNT, TWO BEACONS	AS	5		$0.00
0700 12 50	SIGN BEACON, RELOCATE BEACON- SIGN TO REMAIN	AS	5		$0.00
0700 12 60	SIGN BEACON, REMOVE BEACON- SIGN TO REMAIN	AS	5		$0.00
0700 13 10	RETROREFLECTIVE SIGN STRIP- BACK OF RAIL ROAD CROSSBUCK SIGN BLADES	EA	5		$0.00
0700 13 12	RETROREFLECTIVE SIGN STRIP- FURNISH AND INSTALL, 2'	EA	5		$0.00
0700 13 15	RETROREFLECTIVE SIGN STRIP- FURNISH AND INSTALL, 5'	EA	5		$0.00
0701 17101	PROFILED THERMOPLASTIC,STANDARD- CONCRETE SURFACES, WHITE, SOLID,6"	GM	1		$0.00
0701 17201	PROFILED THERMOPLASTIC,STANDARD- CONCRETE SURFACES, YELLOW, SOLID,6"	GM	1		$0.00
0701 17221	PROFILED THERMOPLASTIC,STANDARD- CONCRETE SURFACES, YELLOW, SKIP,6"	GM	1		$0.00
0701 18101	PROFILED THERMOPLASTIC,STANDARD- ASPHALT SURFACES, WHITE, SOLID,6"	GM	1		$0.00
0701 18201	PROFILED THERMOPLASTIC,STANDARD- ASPHALT SURFACES, YELLOW, SOLID,6"	GM	1		$0.00
0701 18221	PROFILED THERMOPLASTIC,STANDARD- ASPHALT SURFACES, YELLOW, SKIP,6"	GM	1		$0.00
0705 10 1	OBJECT MARKER, TYPE 1	EA	5		$0.00
0705 10 2	OBJECT MARKER, TYPE 2	EA	5		$0.00
0705 10 3	OBJECT MARKER, TYPE 3	EA	5		$0.00
0705 10 4	OBJECT MARKER, TYPE 4	EA	5		$0.00
0705 11 1	DELINEATOR, FLEXIBLE TUBULAR	EA	50		$0.00
0705 11 2	DELINEATOR, NON-FLEXIBLE	EA	5		$0.00

0705 11 3	DELINEATOR, FLEXIBLE HIGH VISABILITY MEDIAN	EA	5		$0.00
0705 11 4	DELINEATOR, FLEXIBLE HIGH PERFORMANCE	EA	5		$0.00
0706 1 3	RAISED PAVEMENT MARKER, TYPE B	EA	200		$0.00
0710 90	PAINTED PAVEMENT MARKINGS, FINAL SURFACE	LS	5		$0.00
0710 11101	PAINTED PAVEMENT MARKINGS, STANDARD, WHITE, SOLID, 6"	GM	1		$0.00
0710 11102	PAINTED PAVEMENT MARKINGS, STANDARD, WHITE, SOLID FOR INTERCHANGE AND URBAN ISLAND, 8"	GM	1		$0.00
0710 11103	PAINTED PAVEMENT MARKINGS, STANDARD, WHITE, SOLID FOR INTERCHANGE MARKINGS, 12"	GM	1		$0.00
0710 11123	PAINTED PAVEMENT MARKINGS, STANDARD, WHITE, SOLID, 12"	LF	3000		$0.00
0710 11124	PAINTED PAVEMENT MARKINGS, STANDARD, WHITE, SOLID, 18"	LF	2000		$0.00
0710 11125	PAINTED PAVEMENT MARKINGS, STANDARD, WHITE, SOLID, 24"	LF	2000		$0.00
0710 11131	PAINTED PAVEMENT MARKINGS, STANDARD, WHITE, SKIP, 10-30 OR 3-9 SKIP, 6" WIDE	GM	1		$0.00
0710 11133	PAINTED PAVEMENT MARKING, STANDARD,WHITE, 3'-9' SKIP DROP LINE AND APPROACH TO TOLL PLAZA, 12" WIDE,	GM	1		$0.00
0710 11141	PAINTED PAVEMENT MARKINGS, STANDARD, WHITE, 2-4 DOTTED GUIDELINE/ 6-10 DOTTED EXTENSION, 6"	GM	1		$0.00
0710 11160	PAINTED PAVEMENT MARKINGS, STANDARD, WHITE, MESSAGE	EA	25		$0.00
0710 11170	PAINTED PAVEMENT MARKINGS, STANDARD, WHITE, ARROWS	EA	25		$0.00
0710 11180	PAINTED PAVEMENT MARKINGS, STANDARD, WHITE, YIELD LINE	LF	500		$0.00
0710 11190	PAINTED PAVEMENT MARKINGS, STANDARD, WHITE, ISLAND NOSE	SF	100		$0.00
0710 11201	PAINTED PAVEMENT MARKINGS, STANDARD, YELLOW, SOLID, 6"	GM	1		$0.00
0710 11202	PAINTED PAVEMENT MARKINGS, STANDARD, YELLOW, SOLID FOR INTERCHANGE AND URBAN ISLAND, 8"	GM	1		$0.00
0710 11203	PAINTED PAVEMENT MARKINGS, STANDARD, YELLOW, SOLID, 12"	GM	1		$0.00
0710 11223	PAINTED PAVEMENT MARKINGS, STANDARD, YELLOW, SOLID, 12"	LF	100		$0.00
0710 11224	PAINTED PAVEMENT MARKINGS, STANDARD, YELLOW, SOLID, 18"	LF	300		$0.00
0710 11225	PAINTED PAVEMENT MARKINGS, STANDARD, YELLOW, SOLID, 24"	LF	100		$0.00
0710 11231	PAINTED PAVEMENT MARKINGS, STANDARD, YELLOW, SKIP, 6"	GM	1		$0.00
0710 11241	PAINTED PAVEMENT MARKINGS, STANDARD, YELLOW, 2-4 DOTTED GUIDELINE/6-10 DOTTED EXTENSION, 6"	GM	1		$0.00
0710 11290	PAINTED PAVEMENT MARKINGS, STANDARD, YELLOW, ISLAND NOSE	SF	100		$0.00
0710 11331	PAINTED PAVEMENT MARKINGS, STANDARD,BLACK, SKIP, 6"	GM	1		$0.00
0710 11333	PAINTED PAVEMENT MARKING, STANDARD, BLACK, 3'-9' DOTTED LANE DROP AND APPROACH TO TOLL PLAZA, 12"	GM	1		$0.00
0710 11341	PAINTED PAVEMENT MARKINGS, STANDARD, BLACK, 2-4 DOTTED GUIDELINE/ 6-10 DOTTED EXTENSION, 6"	GM	1		$0.00

0710 11421	PAINTED PAVEMENT MARKINGS, STANDARD, BLUE, SOLID FOR PARKING LOT- ACCESSIBLE MARKINGS, 6"	LF	100		$0.00
0710 12231	PAINTED PAVEMENT MARKINGS, DURABLE, YELLOW, SKIP, 6"	GM	1		$0.00
0710 12421	PAINTED PAVEMENT MARKINGS, DURABLE, BLUE, SOLID FOR PARKING LOT-ACCESSIBLE MARKINGS, 6"	LF	100		$0.00
0711 11102	THERMOPLASTIC, STANDARD, WHITE, SOLID, 8" FOR INTERCHANGE AND URBAN ISLAND	GM	1		$0.00
0711 11103	THERMOPLASTIC, STANDARD, WHITE, SOLID, 12" FOR INTERCHANGE MARKINGS	GM	1		$0.00
0711 11123	THERMOPLASTIC, STANDARD, WHITE, SOLID, 12" FOR CROSSWALK AND ROUNDABOUT	LF	2500		$0.00
0711 11124	THERMOPLASTIC, STANDARD, WHITE, SOLID, 18" FOR DIAGONALS AND CHEVRONS	LF	500		$0.00
0711 11125	THERMOPLASTIC, STANDARD, WHITE, SOLID, 24" FOR STOP LINE AND CROSSWALK	LF	1500		$0.00
0711 11130	THERMOPLASTIC, STANDARD, WHITE, VERTICAL DEFLECTION MARKING	EA	10		$0.00
0711 11140	THERMOPLASTIC, STANDARD, WHITE, VERTICAL DEFLECTION ADVANCED WARNING MARKING	EA	10		$0.00
0711 11141	THERMOPLASTIC, STANDARD, WHITE, 2-4 DOTTED GUIDELINE/ 6-10 GAP EXTENSION, 6"	GM	1		$0.00
0711 11143	THERMOPLASTIC, STANDARD, WHITE, 2-4 DOTTED GUIDELINE, 12" FOR ROUNDABOUT	GM	1		$0.00
0711 11160	THERMOPLASTIC, STANDARD, WHITE, MESSAGE OR SYMBOL	EA	20		$0.00
0711 11170	THERMOPLASTIC, STANDARD, WHITE, ARROW	EA	20		$0.00
0711 11180	THERMOPLASTIC, STANDARD, WHITE, YIELD LINE	LF	250		$0.00
0711 11224	THERMOPLASTIC, STANDARD, YELLOW, SOLID, 18" FOR DIAGONAL OR CHEVRON	LF	250		$0.00
0711 11241	THERMOPLASTIC, STANDARD, YELLOW, 2-4 DOTTED GUIDE LINE /6-10 DOTTED EXTENSION LINE, 6"	GM	1		$0.00
0711 11421	THERMOPLASTIC, STANDARD, BLUE, SOLID,6"	LF	100		$0.00
0711 14123	THERMOPLASTIC, PREFORMED, WHITE, SOLID, 12"	LF	1000		$0.00
0711 14125	THERMOPLASTIC, PREFORMED, WHITE, SOLID, 24"	LF	1000		$0.00
0711 14141	THERMOPLASTIC, PREFORMED, WHITE, 2-4 DOTTED GUIDELINE ON CONCRETE SURFACES	GM	1		$0.00
0711 14160	THERMOPLASTIC, PREFORMED, WHITE, MESSAGE	EA	5		$0.00
0711 14170	THERMOPLASTIC, PREFORMED, WHITE, ARROWS	EA	20		$0.00
0711 14191	THERMOPLASTIC, PREFORMED, 6" WHITE, RAILROAD DYNAMIC ENVELOPE	LF	100		$0.00
0711 14193	THERMOPLASTIC, PREFORMED, 12" WHITE ON ASPHALT PAVEMENT, RAILROAD DYNAMIC ENVELOPE	LF	250		$0.00
0711 14194	THERMOPLASTIC, PREFORMED, 12" WHITE WITH 4" OUTSIDE BLACK CONTRAST ON CONCRETE PAVEMENT, RAILROAD DYNAMIC ENVELOPE	LF	100		$0.00
0711 14341	THERMOPLASTIC, PREFORMED, BLACK, 2-4 DOTTED GUIDELINE ON CONCRETE SURFACES	GM	1		$0.00
0711 14560	THERMOPLASTIC, PREFORMED, WHITE WITH BLACK CONTRAST ON CONCRETE PAVEMENT, MESSAGE OR SYMBOL	EA	5		$0.00
0711 14570	THERMOPLASTIC, PREFORMED, WHITE WITH BLACK CONTRAST, ARROW ON CONCRETE SURFACE	EA	5		$0.00

0711 15101	THERMOPLASTIC, STANDARD-OPEN GRADED ASPHALT SURFACES WHITE, SOLID, 6"	GM	1		$0.00
0711 15102	THERMOPLASTIC, STANDARD-OPEN GRADED ASPHALT SURFACES, WHITE, SOLID, 8"	GM	1		$0.00
0711 15131	THERMOPLASTIC, STANDARD-OPEN GRADED ASPHALT SURFACES, WHITE, SKIP, 6",10-30 SKIP OR 3-9 LANE DROP	GM	1		$0.00
0711 15133	THERMOPLASTIC, STANDARD-OPEN GRADED ASPHALT SURFACES, WHITE, SKIP, 12"- APPROACH TO TOLL PLAZA OR 3-9 LANE DROP	GM	1		$0.00
0711 15201	THERMOPLASTIC, STANDARD-OPEN GRADED ASPHALT SURFACES, YELLOW, SOLID, 6"	GM	1		$0.00
0711 15202	THERMOPLASTIC, STANDARD-OPEN GRADED ASPHALT SURFACES YELLOW, SOLID, 8"	GM	1		$0.00
0711 15231	THERMOPLASTIC, STANDARD-OPEN GRADED ASPHALT SURFACES, YELLOW, SKIP, 6"	GM	1		$0.00
0711 16101	THERMOPLASTIC, STANDARD-OTHER SURFACES, WHITE, SOLID, 6"	GM	3		$0.00
0711 16102	THERMOPLASTIC, STANDARD-OTHER SURFACES, WHITE, SOLID, 8"	GM	1		$0.00
0711 16131	THERMOPLASTIC, OTHER SURFACES, WHITE, SKIP, 6",10-30 SKIP OR 3-9 LANE DROP	GM	1		$0.00
0711 16133	THERMOPLASTIC, STANDARD-OTHER SURFACES WHITE, SKIP, 12"- APPROACH TO TOLL PLAZA OR 3-9 LANE DROP	GM	1		$0.00
0711 16201	THERMOPLASTIC, STANDARD-OTHER SURFACES, YELLOW, SOLID, 6"	GM	3		$0.00
0711 16202	THERMOPLASTIC, STANDARD-OTHER SURFACES, YELLOW, SOLID, 8"	GM	1		$0.00
0711 16231	THERMOPLASTIC, STANDARD-OTHER SURFACES, YELLOW, SKIP, 6"	GM	1		$0.00
0711 17	THERMOPLASTIC, REMOVE EXISTING THERMOPLASTIC PAVEMENT MARKINGS: NON-CONFLICTING ONLY	SF	500		$0.00
0711 12131	THERMOPLASTIC, REFURBISHMENT, WHITE, SKIP, 6"	GM	1		$0.00
0711 12160	THERMOPLASTIC, REFURBISH, WHITE, MESSAGE	EA	5		$0.00
0711 12170	THERMOPLASTIC, REFURBISH, WHITE, ARROWS	EA	5		$0.00
0711 12231	THERMOPLASTIC, REFURBISHMENT, YELLOW, SKIP, 6"	GM	1		$0.00
713103101	PERMANENT TAPE, WHITE, SOLID, 6" FOR CONCRETE BRIDGES	GM	1		$0.00
713103102	PERMANENT TAPE, WHITE, SOLID, 8" EXIT LANE AT INTERCHANGE ON CONCRETE PAVEMENT	GM	1		$0.00
713103103	PERMANENT TAPE, WHITE, SOLID DROP LANE MARKING, 12" FOR CONCRETE BRIDGES,	GM	1		$0.00
713103131	PERMANENT TAPE, WHITE, SKIP/DOTTED, 6" FOR CONCRETE SURFACES	GM	1		$0.00
713103133	PERMANENT TAPE, WHITE, SKIP, 12" WIDE 3'-9' DROP LANE ON CONCRETE SURFACES	GM	1		$0.00
713103201	PERMANENT TAPE, YELLOW, SOLID, 6" FOR CONCRETE BRIDGES	GM	1		$0.00
713103231	PERMANENT TAPE, YELLOW, 10-30 SKIP/ 3-9 DOTTED, 6" FOR CONCRETE SURFACES	GM	1		$0.00
713103331	PERMANENT TAPE, BLACK, SKIP/DOTTED, 6" FOR CONCRETE SURFACES	GM	1		$0.00
713103333	PERMANENT TAPE, BLACK, 3'-9' DROP LANE, 12" ON CONCRETE SURFACES	GM	1		$0.00
713107	PREFORMED/PERMANENT TAPE, REMOVE	SF	50		$0.00

400143	CLEANING & COATING CONCRETE SURFACE, CLASS 5	SF	5		$0.00
906-173-7	SINGLE COMPONENT POLYURETHANE INJECTION	GAL	500		$0.00
906-173-8	TWO COMPONENT POLYURETHANE INJECTION	LB	10000		$0.00
MISCELLANEOUS LABOR, EQUIPMENT, MATERIAL, AND SUB-CONTRACTOR ITEMS					
	LABOR - FOREMAN	HR	1		$0.00
	LABOR - OPERATOR	HR	1		$0.00
	LABOR - TRUCK DRIVER	HR	1		$0.00
	LABOR - PIPE LAYERS (FOR PIPES < 48" DIA.)	HR	1		$0.00
	LABOR - LABORER	HR	1		$0.00
	EQUIPMENT - FOREMAN P/U WITH HAND TOOLS	HR	1		$0.00
	EQUIPMENT - JOB TRUCK WITH MANDATORY TOOLS*	HR	1		$0.00
	EQUIPMENT - CRANE (20 TON)	HR	1		$0.00
	EQUIPMENT - CRANE (60 TON)	HR	1		$0.00
	EQUIPMENT - TRACTOR & TRAILER (TRANSPORT)	HR	1		$0.00
	EQUIPMENT - TRACK HOE (TO 100 HP)	HR	1		$0.00
	EQUIPMENT - TRACK HOE (101 HP TO 170 HP)	HR	1		$0.00
	EQUIPMENT - RUBBER TIRED BACKHOE	HR	1		$0.00
	EQUIPMENT - WHEEL LOADER (TO 150 HP)	HR	1		$0.00
	EQUIPMENT - WHEEL LOADER (151 HP AND UP)	HR	1		$0.00
	EQUIPMENT - TRACK TYPE TRACTORS (TO 100 HP)	HR	1		$0.00
	EQUIPMENT - TRACK TYPE TRACTORS (101 HP AND UP)	HR	1		$0.00
	EQUIPMENT - DUMP TRUCK (TANDEM AXLE)	HR	1		$0.00
	EQUIPMENT - PLATE TAMP	HR	1		$0.00
	EQUIPMENT - 3" TRASH PUMP	HR	1		$0.00
	EQUIPMENT - 4" DOUBLE DIAPHRAGM PUMP	HR	1		$0.00
	EQUIPMENT - AIR COMPRESSOR (125 SCFM)	HR	1		$0.00
	EQUIPMENT - WELL POINT PUMP	HR	1		$0.00
	EQUIPMENT - 4" JET PUMP	HR	1		$0.00
	MATERIAL - 2500 PSI CONCRETE (UN-FORMED)	CY	1		$0.00
	MATERIAL - OFF SITE SELECT FILL	CY	1		$0.00
	MATERIAL - LIMEROCK BASE MATERIAL	TN	1		$0.00
	MATERIAL - #57 WASHED STONE	TN	1		$0.00
	MATERIAL - ASPHALT PAVING (1.5" THICK; TYPE S-3)	SY	1		$0.00
	MATERIAL - BAHIA SOD	SY	1		$0.00
	SUB-CONTRACTOR - WELDER WITH TRUCK	HR	1		$0.00
	SUB-CONTRACTOR - TRACTOR WITH 7' BUSH HOG	HR	1		$0.00

* Contractor Job Truck Mandatory Tools

	Tool	Minimum size	Quantity
1	Air compressor	20 CFM @ 90PSI	1
2	3/4" drive ratchet and socket set		1
3	1 inch drive air impact wrench		1
4	1 inch drive sockets	1-1/2" to 3"	1 each
5	Slug wrenches	1-1/2" to 3"	1
6	End wrenches	7/16" to 1-1/2"	2 each
7	Porta band saw w spare blades	4" opening	1
8	Sawzall w spare blades		1
9	Nylon slings 5,000 and 10,000 pound rated (vertical)	2" 2 ply/4" 2 ply	2 each
10	Grade 80 Chain 10,000 pound rated	1/2" X 10 ft	2
11	Clevis or Shackles 5 ton rated	5/8" alloy	4
12	Porta power 10 ton		1
13	Shovels- round and square point		3 each
14	Cutting torch set *see note*		1
15	Gas or diesel stick welder and accessories *see note*		1
16	Small diaphragm pump and accessories	2" suction	1
17	Tap and die set	1/2" to 2" NPT	1
18	Drill and bits for steel or ductile	1/2" to 2" NPT size	1 set
19	Pry bar	5 foot	1
20	Come along	2ton	2
21	Circular Saw and blades for cribbing/forms	7 1/2 inch	2
22	Generator 120/240 volt	3500 watt	1
23	Framing hammer and nails for forms		2
24	Screw gun and screws for forms and cribbing		1
25	Gas powered cutoff saw (K-12)	12inch	1
26	Chain saw for cribbing and for'ms	14 inch bar	1
27	Sledge hammers	4t/ and 6tl	1 each
28	Crew PPE to include Hard hat and gloves at minimum	as needed	per person

155 Corey Avenue
St. Pete Beach, FL 33706-1839
www.stpetebeach.org

ADDENDUM 1

Civil On Call Construction Services

Issued 3/23/2026

*Sealed bids must be received by **9:00 AM on 04/08/2026** electronically via Bonfire. Bids received after the deadline will not be accepted. They will be publicly opened and read at **11:00 AM on 04/08/2026**. All bidders are invited to attend this bid Opening.*

Addendum 1 includes:

Pre-bid Minutes
Questions and Answers

Optional - Pre-Bid Meeting Minutes
RFP: Civil On Call Construction Services
March 18, 2026
10:00 AM

Staff Members Present:
Sara Spain, Procurement Manager
John Taylor, Assistant Finance Director
Camden Mills, Public Services Director
Dejan Milosevic, Project Manager
Michael Weaver, Infrastructure Operations Manager
Brian Gelock, Public Services
Kenneth Kosbab, Public Services
Ariana Wilson-Romo, Exec. Assistant City Clerk's Office

Others Present:

Name	***Company***	***Contact***
Abbey Boyle	PCS Civil	abbeyb@pcscivilinc.com
Bruno Sequeira	BCS Construction Group	Did not provide.
George Pappas	Southern Road & Bridge LLC	gpappas@southernrb.com
Tristan Hine	PCS Civil	tristanh@pcscivilinc.com
Dave Reid	Ajax Paving Industries of FL LLC	flestimate@ajaxpaving.com
Zachariah Wachalec	David Nelson Construction Co.	zwachalec@nelson-consturction.com

The meeting was called to order at 10:02 AM.

All attendees were present via Teams.

Ms. Spain briefly reviewed important dates and times which are as follows:
- Receipt of questions due 3/25 at 10AM
- Bids due 4/8 by 9AM
- Bid opening 4/8 at 11AM

She requested that any questions be submitted in writing to purchasing@stpetebeach.org. Questions will be answered via an addendum that will be posted to the City website and Bonfire.

Public Services Director Camden Mills stated that the City is seeking as-needed construction services for various capital projects and/or maintenance projects. Ms. Spain clarified that the City does anticipate awarding multiple vendors.

The following questions were asked:
Q: Contract terms? A: 3yr with options for two one-year renewals.
Q: Size project monetary-wise? A: The scope touches on what the dollar amounts would be. This contract would be used for anything under $4M. An addendum with anticipated projects can be posted.

There were questions regarding how contractors are selected if unit line items were being submitted in advance. Mr. Mills and Ms. Spain will clarify the contract language via an addendum. Ms. Spain added that in the general contract terms, it states that submissions will be evaluated on capability, cost, and capacity to perform the specific line items requested.
There being no additional questions, the meeting was adjourned at 10:16 AM.

Questions and Answers:

1. **Are there any plans available for the potential work needed? Or would you like us to provide the price for each line item on the bid form? – Plans are not yet available for the potential work needed. Please provide the unit price for each line item on the bid form that you're capable of performing or subcontracting.**
2. **On the bid form for the On-Call Civil Construction Services list, pay items 285701 through 285715, Optional Base Group 1 through Optional Base Group 15, are listed, but it does not specify which base option will be required. What base options are needed for each base group? – Base Groups 1-11: Graded aggregate based or crushed concrete, consisting of granitic material (minimum LBR 100). Base groups 12-15: Type B-12.5.**
3. **Prebid question: Contract Terms? 3 year with options for 2 one-year renewals.**
4. **Prebid question: Size project monetary-wise? The scope touches on what the dollar amounts would be. This contract would be used for anything under $4M.**
5. **Prebid question: List of anticipated projects. See list below of anticipated projects. This list is not all inclusive of potential projects, other projects may be assigned as needed.**
    - **Citywide stormwater collection system repairs and replacements (estimated > $1,000,000)**
    - **Citywide traffic signage replacements (estimated <$250,000)**
    - **Citywide pavement markings (estimated <$250,000)**
    - **Public Services operations yard expansion (estimated >$250,000 and <$500,000)**
    - **Coquina Way cul-de-sac improvements (<$250,000)**
    - **Fisherman's park hurricane damage rehabilitation (estimated >$250,000 and <$500,000)**
    - **Sunset park hurricane damage rehabilitation (estimated >$250,000 and <$500,000)**
    - **Gulf Way roadway rehabilitation (estimated > $2,000,000)**
    - **Belle Vista mini park improvements (estimated <$250,000)**
    - **1st Ave fishing pier hurricane damage repair (estimated <$250,000)**
    - **7th Ave fishing dock hurricane damage repair (estimated <$250,000)**
6. **Prebid question: There were questions regarding how contractors are selected if unit line items were being submitted in advance. Ms. Spain added that in the general contract terms, it states that submissions will be evaluated on capability, cost, and capacity to perform the specific line items requested. – Refer to II. Statement of Work, Part I: General Requirements, G. Work Assignments.**
7. **Will we split up projects (e.g. Seawalls and Parks)? – Multiple vendors may be selected per project depending on scope of work and vendors capabilities. Vendors are encouraged to submit unit prices for line items that they can perform or subcontract.**

155 Corey Avenue
St. Pete Beach, FL 33706-1839
www.stpetebeach.org

ADDENDUM 2

Civil On Call Construction Services

Issued 3/27/2026

*Sealed bids must be received by **9:00 AM on 04/08/2026** electronically via Bonfire. Bids received after the deadline will not be accepted. They will be publicly opened and read at **11:00 AM on 04/08/2026**. All bidders are invited to attend this bid Opening.*

Addendum 1 includes:

Questions and Answers

Questions and Answers:

1. **What class should the Round and Other-Elip/Arch pipe culvert be, class 3 or 4?** **The Round and Other-Elip/Arch pipe culvert bid items are listed as optional material pipe culverts and are not intended to specify a particular pipe class (e.g., Class III or Class IV) at the bid stage. The required pipe material and structural class, if applicable, will be determined by the City for each specific task order based on the project design, loading conditions, and applicable Florida Department of Transportation Standard Specifications.**

2. **Do the U-End walls need to be precast or cast in place?** **U-end walls may be precast or cast-in-place, as appropriate for the specific task order. The required type will be identified in the plans or directed by the City/Engineer for each assignment.**

3. **Are any inlets planned to be cast in place?** **Inlets may be precast or cast-in-place depending on site conditions and design requirements. This will be defined on a task order basis.**

4. **Will any of the end walls listed on the bid form have runs of pipe passing through them? If so, how many runs and at what skew?** **Some end walls may include pipe penetrations; however, the number of runs, pipe sizes, and skew angles (if any) will be determined by the design for each individual task order and shown in the applicable plans.**

5. **Please clarify how contract work will be assigned. The Statement of Work, Part I, Section 1, item G (Work Assignments) states that the City will obtain quotes from the Contractors who have a multiple-award contract. The City will already have contract pricing for each Contractor in the multiple-award contract, what is the criteria for these quotes?** **In the general contract terms, it states that submissions will be evaluated on capability, cost, and capacity to perform the specific line items requested.**

6. **Statement of Work, Part I, Section 15 states that Contractors must provide references for 5 work types in item E. If the Contractor does not intend to submit pricing for a work type, must that work type still be included in the project references?** **No, bidders shall provide references for applicable work types.**

7. **Please clarify the Period of Performance in the General Contract Terms. This states base scope target completion of January 2027 while other parts of the RFP specify a three year contract.** **3-year contract with 2 options for 1-year extensions. Ongoing work may be required.**

8. **Will any bonding be required?** **Yes, 5% of total bid amount.**

EXHIBIT "C"

Vendor Bid/Proposal

(Place Vendor's Bid/Proposal Behind this Page)

St. Pete Beach
The Sunset Capital of Florida

City of St Pete Beach
Request for Proposal

Civil On Call Construction Services

Timeline	Date	Time
Publication of Bid	03/11/2026	8:00 AM
Pre-Bid Meeting	03/18/2026	10:00 AM
Deadline for Question Submission	03/25/2026	10:00 AM
Submittal Deadline electronically via Bonfire	04/08/2026	9:00 AM
Submittal Opening	04/08/2026	11:00 AM

Submittals are due on or before
04/08/2026 at 9:00 AM EST
Electronically Via Bonfire Only

TABLE OF CONTENTS

I. INVITATION 3
II. STATEMENT OF WORK 4
III. BID FORM 26
IV. GENERAL CONTRACT TERMS 27
V. REFERENCES & MINIMUM QUALIFICATIONS 38
VI. CONTRACTOR'S PROPOSAL SUBMITTAL 39
VII. PUBLIC ENTITY CRIMINAL AFFIDAVIT 40
VIII. NON-COLLUSION AFFADAVIT 42

I. INVITATION

The City of St Pete Beach has issued this Request for Proposal (RFP) to solicit competitive bids and proposals from Proposers for a Task Work Order driven Civil On-Call Construction Services Contract. The successful bidder shall provide all labor, materials, equipment, tools, consumables, transportation, and incidentals to provide Public Services capital improvement projects construction services on an 'as needed' basis for the City of St Pete Beach.

The types of projects that may be assigned under this Contract shall include, but not be limited to:

- intersection/roadway improvements
- drainage upgrades and/or installations
- ADA upgrades and pedestrian/bicyclist improvements
- sidewalk installations and upgrades
- alley improvements
- median modifications
- signing and pavement markings
- recreational trails
- signal upgrades and installations
- intelligent transportation systems (ITS) components upgrades

CONTACT INFORMATION
Procurement Manager – Sara Spain
Email – purchasing@stpetebeach.org

II. STATEMENT OF WORK

PART I: GENERAL REQUIREMENTS

1. SPECIAL CONDITIONS

A. **Local Preference, Location Points and Tie Breakers**

Location preferences do not apply due to the fact that some task orders may be funded with state or federal dollars.

B. **Minority Business Enterprise Policy**

Minority Business Enterprise Evaluation Criteria do not apply due to the fact that some task orders may be funded with state or federal dollars.

C. **Scrutinized Companies**

Scrutinized Companies with activities in Sudan List or activities in the Iran Petroleum Energy Sector List do not apply due to the fact that some task orders may be funded with state or federal dollars.

D. **Bonding and Credit**

Contractor/Vendor shall provide a letter of bondability showing their maximum bonding capacity.

E. **Contract Term**

This will be a three (3) year initial contract with the option to be extended for two (2) additional one (1) year periods upon mutual consent of both parties. It is the intent of the City of St Pete Beach to award these services to more than one Contractor/Vendor.

F. **Contract Pricing**

Contract prices for equipment and/or service will remain firm through the first three (3) contract years. Sixty (60) days prior to the contract renewal date, Contractor/Vendor may request a price adjustment. The price adjustment and justification must be submitted in writing, and be approved by the City. Said price increase may not, under any circumstances, exceed three (3) percent of the Construction CPI. No retroactive contract price adjustments will be allowed. If the Contractor/Vendor fails to submit a price adjustment within the sixty (60) days prior to the contract renewal date, current contract pricing will continue for the contract renewal period.

G. **Work Assignments**

All work to be performed shall take the following into consideration prior to assignment of any work to any Contractor/Vendor, at the discretion of the Procurement Manager:

1. **Estimated Cost < $250,000.00:**

The City retains the right to select any Contractor/Vendor to whom a multiple-award contract has been made when the opportunity to submit a quote for any job whose estimated cost is less than Two Hundred & Fifty Thousand Dollars ($250,000.00).

2. **Estimated Cost > $250,000.00 and < $500,000.00:**

The City shall obtain three (3) quotes from any Contractor/Vendor to whom a multiple vendor award has been made, for those jobs whose estimated cost is greater than Two Hundred & Fifty Thousand Dollars ($250,000.00) and less than Five Hundred Thousand Dollars ($500,000.00).

3. **Estimated Cost > $500,000.00:**
   a. The City retains the right to separately and competitively bid any and all projects whose cost estimates are greater than Five Hundred Thousand Dollars ($500,000.00). The determination will be made by the City Procurement Manager.
   b. Projects that exceed Five Hundred Thousand Dollars ($500,000.00) may not be sub-divided into separate projects in order to circumvent such requirement.

4. **Reassignment of Work:**

The City retains the right and authority to reassign work to another Contractor/Vendor, at any time, for the following reasons:

a. The lowest Contractor/Vendor cannot comply with the specifications in cases of an emergency.
b. The lowest Contractor/Vendor cannot respond to the job requirements, at the time, due to scheduling conflicts, staffing considerations or other reasonable cause(s) for preventing their completion of the task as required.
c. The City shall have the option to solicit additional quotes, bids, or even professional opinion about a particular job when in its best interest and could engage the services of another company/Contractor/Vendor. This exception will always require advanced written notice and explanation by the requesting City Department to the Procurement Manager, for approval, before authorizing any contemplated work to be done. The receipt of the approved purchase order shall be understood that all work is to immediately begin on the project, per the project schedule and needs as identified by the City and as agreed upon by the Contractor/Vendor.

5. **Cumulative Work shall not exceed $4,000,000.00:**

The cost of all work completed by a Contractor/Vendor shall not exceed Four Million Dollars ($4,000,000.00) in a calendar year. If all costs are expected to exceed this threshold, these services will need to be separately re-bid through issuance of a new set of bid specifications.

H. **Quotes**

1. The City will request a quote if and when needed. Vendors participating in the contract shall have ten (10) business days from written notification to respond to quotes, unless waived by the Procurement Manager. If work is an emergency, as determined by the City, vendors shall have (24) hours from email or phone notification to respond to quotes.
2. A Task Order Form will be provided to awarded Contractor/Vendor. A properly executed Purchase Order shall be issued for the work assignment and shall have the Task Order Form and all related paperwork attached as backup. The Purchase Order shall indicate the start and end dates for the project.
3. If the Contractor/Vendor does not wish to issue a quote for or cannot meet the requirements of the project, inclusive of the time given in which to complete the job; the Contractor/Vendor shall complete the Work Order Form by noting "No Quote" on the form itself and by also providing an explanation as to why they are not submitting a quote.
4. Final costs for any individual project shall not exceed the original approved and total cost for such project by more than ten percent (10%). Any and all anticipated project cost increases are subject to advanced approval by the Procurement Manager.
5. Any Contractor/Vendor that fails to submit a quote successively three (3) times in a row may have their contract cancelled due to non-performance.

I. **Notice to Proceed (NTP)**

All task orders $250,000.00 or less will use the purchase order as the Notice to Proceed (NTP). The start date and date or the number of day to complete the project must be included on the purchase order. If the start date is left off the purchase order then the date of the purchase order approval will default as the NTP start date. Projects over $250,000.00 will have a formal NTP issued through the Purchasing Division. All task orders must be reviewed by the Purchasing Division before a purchase order or NTP is issued.

J. **Liquidated Damages**

Liquidated damages will be assessed to the Contractor/Vendor/vendor for each consecutive calendar day completion of the project or work is delayed. The amount of liquidated damages will be dependent on the cost of the task order and will be calculated using the chart below.

Estimated Project Cost Over	Estimated Project Cost But Less than	Daily Charge Per Calendar Day
$0.00	$50,000.00	$960.00
$50,000.00	$250,000.00	$965.00
$250,000.00	$500,000.00	$1,245.00
$500,000.00	$2,500,000.00	$1,665.00
$2,500,000.00	$5,000,000.00	$2,715.00

K. **Project Spreadsheet Submittal**

Contractor/Vendor must submit a formal spreadsheet using the process below.

1. List of completed projects to include:
   a. Relevant project experience includes construction and delivery methods relevant to the type of project to be constructed utilizing the CM/GC method (or performing as a General Contractor/Vendor on similar types and sizes of projects).
   b. Describe no more than ten (10) and no less than five (5) projects in order of most relevant to least relevant (similar type of construction with a contract dollar amount of $500,000.00 or less) which demonstrates the firm's capabilities to perform such projects.
   c. For each project, the following information should be provided:
      i. Project name
      ii. Project location
      iii. Dates during which services were performed
      iv. Physical description (e.g. square footage, key components, site area)
      v. Brief description of Project Services performed by CM/GC or GC Firm.
      vi. Owners Information:
         a. Contact person
         b. Telephone number
         c. Email
         d. Project name
         e. Owner reference
         f. Original Contract Price
      vii. Amount of Change Orders by:
         a. Your Company
         b. Consultant
         c. Client/Entity
      viii. Final Project Price
      ix. Proposer should include a table with this information layout as follows:

Entity Name and Project Name	Contact Person Phone Email	Begin Project Amount	Change Orders by CMR	Change Orders by Engineer	Change Orders by Entity	Final Cost of Projects	Original Days for Construction	Final Construction Days

2. Any outstanding accomplishments of the firm that relates to the specific services being sought.

3. Any Quality Assurance and Value Engineering Programs should also be included.

2. STANDARD SPECIFICATIONS

The Project shall be constructed in accordance with these specifications, the Pinellas County Engineering Standard Details and the Florida Department of Transportation "Standard Specifications for Road and Bridge Construction", Latest Edition.

3. GOVERNING DOCUMENTS

The Specifications and all supplementary documents are essential parts of the Contract, and a requirement occurring in one is as binding as though occurring in all. They are intended to be complimentary and to describe and provide for a complete project. In case of discrepancy, calculated dimensions will govern over scaled dimensions.

The Contractor shall take no advantage of any apparent error or omission in the specifications. If the Contractor discovers such an error or omission, they shall immediately notify the Project Manager. The Project Manager will then make such corrections and interpretations as may be deemed necessary for fulfilling the intent of the specifications.

4. COOPERATION WITH OTHERS

The Contractor shall cooperate with the owners of any underground or overhead utilities in their removal and rearrangement operations in order that these operations may progress in a reasonable manner and that service rendered by these parties will not be interrupted.

A. Permits

1. City ROW Use Permit: The Contractor will obtain a Right of Way Use Permit from the City Permits Division located at 155 Corey Avenue, Florida. There will be no fee for this permit.
2. Public Services will require shop drawings, schedule, and the location of staging areas at the pre-construction meeting. Where the Contractor wishes to use private property, he shall obtain permission from the owner in writing and submit a copy at the first meeting.
3. The Contractor will be responsible for the requirements of all permits. There may be FDOT permits required for this project.

5. LINES, GRADES AND CONSTRUCTION SURVEYING

The Contractor shall lay out the work from the benchmarks, grades, dimensions, points and lines noted on the working drawings, established at the site, or supplied by the Project Manager. All work of every description shall be laid out and checked by the Contractor who will be held solely responsible for its correctness, and the Contractor shall pay for all expenses in connection with this work. The Contractor shall request clarification from the Project Manager of any errors, inconsistencies or omissions which they may discover. It is the Contractor's responsibility to review every street prior to milling and paving, including the inspection of overhead tree limbs, overgrown grass on pavement, manholes and gate valves.

The work may be checked by the Project Manager, and in the event of a discrepancy, their decision shall be final. No special compensation will be made to the Contractor to defray costs of any work or delays occasioned by making surveys and measurements, tests, or inspections, but such costs shall be considered as having been included in the price stipulated for the several items of work to be done under this Contract.

All attempts shall be made to protect existing property corner monumentation. The monumentation must be identified and marked prior to construction to ensure its permanency. All survey monuments, property corners, and benchmarks, which may be disturbed during construction, shall be referenced and replaced by the Contractor. All monuments and benchmarks disturbed or destroyed by the Contractor or any of his forces through accident or negligence shall be replaced by a Florida Licensed Professional Land Surveyor at the Contractor's expense. All survey markings shall be brought to the attention of the Project Manager.

6. MAINTENANCE OF DETOURS

The Contractor shall repair, at his expense, all potholes and other localized failures on streets which are used as detour routes to facilitate construction operations.

7. REPLACEMENT OF TRAFFIC, STREET SIGNS, SIGNAL LOOPS AND MAILBOXES

The Contractor shall remove and re-erect all existing traffic, street signs and mailboxes within the project site at his own expense for those which must be moved or relocated to permit construction operations.

The Contractor shall notify the City prior to disturbing any traffic signal loops and the City will install new traffic signal loops under a separate contract.

8. USE OF PREMISES

The Contractor shall confine all apparatus to the roadway or right-of-way in which the work is being performed and will not unreasonably encumber these premises with such apparatus, materials, supplies, and equipment. The Contractor shall promptly remove and dispose of all debris resulting from his operations.

9. PROSECUTION OF WORK/ LIQUIDATED DAMAGES

The Contractor shall begin work on any project/road no later than fourteen (14) calendar days after receipt of the "Notice to Proceed"; and shall diligently prosecute the same to project completion prior to the expiration of the total number of calendar days determined necessary for the project, from the date of said "Notice to Proceed".
Failure to complete each project within the determined number of calendar days shall cause the Contractor to be subject to the provisions for Liquidated Damages. The Contractor shall pay to the City as fixed liquidated damages for each calendar day of delay until the work is complete or accepted, and the Contractor and their sureties, jointly and severally, shall be liable for the amount thereof:

A. For each Task Work Order issued, the City project manager will determine the required number of days for completion of all work as well as the amount for liquidated damages, as appropriate.

B. Liquidated Damages will be assessed in accordance with Part I, 2. Special Conditions, J. Liquidated Damages of these bid specifications.

** Please refer to City of St Pete Beach Terms and Conditions, "Liquidated Damages, Penalties and Non-Conformance to Contract"

10. CONSTRUCTION SCHEDULE

A. Work shall be performed on an "as needed" basis for a **three (3) year contract period**. Upon mutual consent, this agreement may be extended for **two (2) additional one (1) year periods**, subject to the same terms and conditions and available funding being in place. No guarantee of volume or quantity of work is intended.

B. At the direction of the City of St Pete Beach, the Contractor will not be allowed to proceed with the scheduled work until restoration of preceding work areas are restored to the satisfaction of the City of St Pete Beach. It is the intent of this project to:

1. Start paving each street no later than three (3) working days after milling each street. If the street has not been paved after three (3) working days, a fee equal to the daily amount for liquidated damages indicated in Item #2J (above) will be assessed until the street has been paved. The time limit for streets to be paved where sewer manhole castings or water valve boxes need to be adjusted or replaced will be three (3) working days after the casting or water valve boxes have been adjusted or replaced.

2. Complete restoration including temporary striping and clean-up, shall be finished in no more than five (5) working days after the completion of paving activity and as directed by the City.

3. No work shall be done during the week between the hours of 9:00 PM and 6:00 AM, or between the hours of 9:00 PM and 9:00 AM on weekends or holidays; except for emergency work by a public service utility or by other permit approved by the City.
4. Night work may be established by the Contractor as regular procedure by obtaining the written permission of the City. Such permission may be revoked at any time by the City, if the Contractor fails to maintain adequate equipment and supervision for the proper execution, control, and safety of the work at night.

C. Work may need to be performed under more urgent timeline at the direction of the City of St Pete Beach. The Contract bid form includes pay items for Emergency Mobilizations for such occurrences. The Contactor shall respond to Emergency Work Requests within 24 hours and should expect to mobilize in less than 72 hours.

11. CONTRACTOR'S ACCEPTANCE OF CONDITIONS

The provisions of this Contract shall control any inconsistent provisions contained in the specifications. All Drawings and Specifications have been read and carefully considered by the Contractor, who understands the same, and agrees to their sufficiency for the work to be done.

It is expressly agreed that under no circumstances, conditions or situations shall this Contract be more strongly construed against the City than against the Contractor and his Surety.

Any ambiguity or uncertainty in the Drawings or Specifications shall be interpreted and construed by the Project Manager, or their designee, and their decision shall be final and binding upon all parties.

It is distinctly understood and agreed that the passing, approval and/or acceptance of any part of the work or material by the City, the Project Manager, or by any agent or representative as in compliance with the terms of this Contract and/or of the Drawings and Specifications covering said work, shall not operate as a waiver by the City of strict compliance with the terms of this Contract, and/or the Drawings and Specifications covering said work; and the City may require the Contractor and/or his surety to repair, replace, restore and/or make to
comply strictly and in all things with this Contract and the Drawings and Specifications any and all of said work and/or materials which within a period of one year from and after the date of the passing, approval, and/or acceptance of such work or material, are found to be defective or to fail in any way to comply with this Contract or with the Drawings and Specifications.

This provision shall not apply to materials or equipment normally expected to deteriorate or wear out and become subject to normal repair and replacement before the condition is discovered. The Contractor shall not be required to do normal maintenance work under the guarantee provisions. Failure on the part of the Contractor and/or his surety, immediately after notice to either repair or replace any such defective materials and workmanship, shall entitle the City, if it sees fit, to replace or repair the same and recover the reasonable cost of such replacement and/or repair from the Contractor and/or his surety, who shall in any event be jointly and severally liable to the City for all damage, loss and expense caused to the City by Reason for the Contractor's breach of this Contract and/or his failure to comply strictly and in all things with this Contract and with the Drawings and specifications.

12. HAZARDOUS MATERIALS

The Contractor shall be responsible for the independent inspection and certification of the removal, transportation and disposal of all identified and all unidentified hazardous materials located within the project site.

13. JOB CONDITIONS

A. The Contractor is to provide the City with a working schedule prior to commencing the project. The City reserves the right to revise and/or adjust the schedule accordingly.

B. City Notification: At least 72 hours in advance of closing, or partially closing, any street, alley, or other public thoroughfare, the Contractor shall notify the Engineering Division of the Public Services Department, and immediately notify the same agencies of the reopening.

C. Customer Notification: The City of St Pete Beach residents occupying a home on the street to be milled and paved shall be notified seven (7) days before the construction of the street begins. This is completed by the following:

1. A door hanger notice will be provided by the Department of Public Services. It shall contain the reason for the construction, the overall length of time with dates, any problems that may be encountered and other important information regarding the project. The Contractor is responsible for the installation of the door hanger notices no later than seven (7) working days before the construction of the street begins.

2. The Contractor shall hand this notice to each resident. If the resident is not available, the Contractor is to place the door hanger on the doorknob. In certain sensitive areas, usually business areas and as requested by the Engineer, each customer may be asked to sign a signature sheet with their name, address, and signature. The original shall be given to the Department of Public Services before any construction commences.

D. Utility Emergency Access: All fire hydrants, valves, water meters and backflow assemblies shall be free of all construction material and equipment and in plain view for easy emergency access or necessary maintenance by the City crews.

E. Pedestrian or School Crossings: Where the work crosses or interferes with school or pedestrian crossings, extreme care shall be taken by the Contractor to insure the safety of the school children or other pedestrians.

F. Temporary Staging Areas: The Contractor shall obtain all temporary construction staging areas approvals required and shall not encroach onto private property unless a written agreement has been made between the property owner and the Contractor; or onto public property unless a written agreement has been made and approval by the Purchasing Division's designee has been received prior to using the land. The Contractor shall assume full responsibility for the protection and safekeeping of materials stored at the staging areas.

G. Erosion Control: Prior to construction, all efforts for siltation/erosion control will be taken, including the use of turbidity screens, hay bales, and sod replacement at the earliest possible time prior to and after excavation/grading. Sediment/erosion controls should be used around drainage structures and any areas to mitigate erosion on or off the project site. The Contractor is responsible for any removal of asphalt debris in manholes or drainage structures.

H. Road Hauling: The existing paved roads in the City shall be used for transporting material required for construction of the project. The Contractor should be aware that any road that is damaged during construction due to truck/equipment involvement would be the responsibility of the Contractor to correct. The Contractor shall contact the City for specific routes to be used during construction.

I. Water on Street: All water shall be removed, and the streets dry prior to paving. No paving shall take place during a rainstorm event.

J. Towing of Vehicles: The City will remove any cars parked in the way of the resurfacing project as long as proper notification has been given as stated under Section 13.c. (above) of the Scope of Work.

K. Clippings: Where grass, tree roots or other vegetation has grown over or above the edge of the asphalt, it shall be removed to the existing edge of asphalt by the Contractor prior to paving the street.

L. City Utilities: If work by the Contractor results in damage to City owned utilities; the Contractor shall repair the damage immediately at no cost to the City. If the Contractor does not respond immediately to repair the damaged utility, the City Utilities Department will make the repair and bill the Contractor for the costs incurred.

M. Dumpsters: The City will relocate all dumpsters in the way of this project. The Contractor is to provide written notice to the City forty-eight (48) hours in advance when said dumpsters need to be moved.

N. Disturbed Areas: All areas disturbed by the construction shall be restored to a condition at least equal to the pre-construction conditions or to what shall be approved by the Project Manager.

O. Security: The Contractor shall be responsible for the site security and shall determine whether full time watchmen will be required. The Contractor shall inspect the area daily and take whatever measures necessary to protect the safety of the public, workmen and materials both day and night.

P. Brick/Driveways: The Contractor shall be responsible for the tack coat not being spread to the brick crosswalks, brick intersections, brick speed tables, driveways or other similar areas due to the hauling of the asphalt. These areas shall be covered with sand or other City approved material. If tack appears on these items from the Contract, it shall be the responsibility of the Contractor to remove it.

Q. Interference with Others: The Contractor shall coordinate with Pinellas Suncoast Transit Authority or any public agency to notify the agency of any and all potential disruption in service. The Contractor shall not interfere with materials, appliances, or workmen of the City, Private Utility Companies, or any other contractor, who may be performing work at the same sites. All contractors and other parties involved shall have equal rights as far as practicable, to the use of all roads and grounds, except as otherwise provided by these specifications. The decision of the Project Manager shall govern in cases of disagreement between contractors or other parties regarding such use.

R. Public Safety: The Contractor shall provide, erect, and maintain continually, seven days per week and twenty-four hours per day, all necessary barricades, reflectorized signs, signals, flashing lights, red lights, "danger" or "caution" or "street closed" signs, etc., and take all necessary precautions necessary for the protection of the work and the safety of the public. The Contractor shall also provide a watchman at all places where the work causes obstructions to normal traffic or constitutes in any way a hazard to the public.

S. Cleaning Up: The Contractor shall always keep the construction area clean from accumulation of waste material or rubbish, including storage areas. The Contractor shall remove any rubbish, tools, scaffolding, equipment and materials from and about the premises, which do not belong to the City, prior to completion of the work. The Contractor shall leave the work and premises, following the completion of work, in a clean and workmanlike condition satisfactory to the Project Manager or their representative.

T. Coordination of Details with the County Sheriff: Any traffic detour plan must be submitted by the Contractor for approval to the Engineer of Record, the Engineering Division of the Public Services Department and the Pinellas County Sheriff at least two (2) weeks prior to the implementation of said detour in order to provide adequate time for review. Detour plans must include all streets involved in the detour.

U. Maintaining Proper Drainage Flow: No drainage structure or paved waterway shall be blocked by the new pavement work. New pavement shall be feathered or tapered towards the inlet opening. This task is to be included as part of the paving operation and there shall be no separate payment for this work. Any debris entering the drainage structure during construction is to be removed by the Contractor.

V. Responsibility of the Contractor: The Contractor shall be entirely responsible and liable for all damage or injury as a result of his operations to all other adjacent public and private property, structures of any kind and appurtenances thereto met with during the progress of the work. The cost of protection, replacement in their original locations and conditions or payment of damages for injuries to such adjacent public and private property and structures affected by the work, whether or not shown on the drawings and the removal, relocation and reconstruction of such items called for on the drawings or specified shall be included in the various Contract Items and no separate payments shall be made thereof. Where such public and private property, structures of any kind and appurtenances thereto are not shown on the drawings and when, in the opinion of the Project Manager to avoid interference with the work, payment therefore will be made as provided for extra work in the Agreement. The Contractor is expressly advised that the protection of the buildings, structures, tanks, pipelines, and related work adjacent and in the vicinity of his operations, wherever they may be, is solely his responsibility.

W. Protection of Trees, Lawn & Sod: All trees, shrubs and sod shall be adequately protected by and in accordance with all ordinances governing the protection of the trees. No materials shall be placed so as to injure such trees, shrubs and sod. Trees, shrubs and sod destroyed by negligence of the Contractor or his employees shall be replaced by him with new stock of similar size and age, at its proper season and at the sole expense of the Contractor. Trees close to the work shall be protected against injury. The Contractor shall trim all branches and roots in the road that are necessary to complete the project and are liable to damage his operations, but in no case shall any tree be cut or removed without prior notification of the Project Manager. It is the Contractor's responsibility to inspect all roads that are to be milled and resurfaced. All injuries to bark, trunk, limbs, and roots of trees shall be repaired by dressing, cutting, and painting according to approved methods, using only approved tools and materials under the direction of City Staff. Lawn areas shall be left in good condition as before the starting of the work. Where sod has been removed shall be restored with new sod in a good workmanship manner approved by the resident or the Project Manager. The sod shall match existing grass and shall have no visible broad leaf weeds or foreign grasses. Water for the sod shall be supplied by the Contractor in sufficient quantities required to keep the grassed areas moist for a period of one month from the date of installation. The Contractor shall guarantee the satisfactory growth for a 90-day period.

X. Noise: The Contractor shall eliminate noise to as great an extent as practicable at all times. Air compressing equipment shall be equipped with silencers and the exhaust of all gasoline motors or other power equipment shall be provided with mufflers. In the vicinity of hospitals and schools, special care shall be used to avoid noise or other nuisances. The Contractor shall strictly observe all local regulations and ordinances covering noise.

Y. Access to Public Services: No materials used in the construction of the work shall be placed as to prevent free access to all fire hydrants, valves, manholes, driveways and roadways.

14. SUBSTITUTIONS

Whenever material or equipment are specified or described in the Contract documents by using the name of a proprietary item or the name of a particular supplier the naming of the item is intended to establish the type, function and quality required. Unless the name is followed by words indicating that no substitution is permitted, materials or equipment of other suppliers may be accepted by Project Manager if sufficient information is submitted by Contractor to allow Project Manager to determine that the material or equipment proposed is an approved alternate to that named. The procedure for review by the Project Manager will include the following as supplemented in the General Requirements. Requests for review of substitute items of material and equipment will not be accepted by Project Manager from anyone other than Contractor. If Contractor wishes to furnish or use a substitute item of material or equipment, Contractor shall make written application to Project Manager for acceptance thereof, certifying that the proposed substitute will perform adequately the functions and achieve the results called for by the general design, be similar and an approved alternate to that specified and be suited to the same use as that specified. The application will state that the evaluation and acceptance of the proposed substitute will not prejudice Contractor's achievement of Substantial Completion on time, whether or not acceptance of the substitute for use in the work will require a change in any of the contract documents (or in the provisions of any other direct contract with City for work on the Project) to adapt the design to the proposed work is subject to payment of any license fee or royalty. All variations of the proposed substitute from that specified will be identified in the application and available maintenance, repair and replacement service will be indicated. The application will also contain an itemized estimate of all costs that will result directly or indirectly from acceptance of such substitute, including costs of redesign and claims of other Contractors; affected by the resulting change, all of which shall be considered by Project Manager in evaluating the proposed substitute. The Project Manager may require Contractor to furnish at Contractor's expense additional data about the proposed substitute.

15. MINIMUM QUALIFICATIONS

The City has established minimum qualifications for Contractor expertise and experience regarding the subject project as follows:

A. The Contractor must provide a minimum of three (3) project references and may provide a maximum of five (5) project references for each of the five (5) criteria listed below.

B. Each project reference must have been successfully completed in the ten (10) years preceding the bid opening.

C. All criteria do not need to be satisfied by each submitted project reference, however, all criteria must have been satisfied two (2) times by the submitted project references.

D. Any project for which references are provided may have been self-performed with Contractor's employees or performed by a subcontractor who is part of the Contractor's team for this project.

E. The Contractor qualification requirements include the following:

1. Construction of site work including clearing, grubbing, and fine grading.
2. Construction of flexible and rigid pavement roadways, alleys, and trails.
3. Construction of sidewalk and ADA accessibility improvements.
4. Construction of stormwater utility upgrades.

5. Construction of signal, lighting, and intelligent transportation system (ITS) component upgrades.

[END OF PART I]

PART II: PROGRESS MEETINGS

1. FREQUENCY

Progress meetings will be held every other week or less, with the first meeting fourteen (14) days after the pre-construction meeting or fourteen (14) days or less after the date of the Notice to Proceed.

The City has the right to hold called meetings as required by the progress of the work.

2. ATTENDANCE

The following people should attend progress meetings, as applicable:

- Project Manager
- City Inspector Contractor
- Subcontractors as appropriate to the Agenda Suppliers as appropriate to the Agenda Others as appropriate

3. PROGRESS SCHEDULE

The Contractor shall submit a detailed schedule before work is to be started. It shall indicate the sequence of the work, the time of starting and completing each part.

4. SUGGESTED AGENDA

- Review approval of minutes of previous meetings. Review of work progress.

Field observations, problems, and conflicts. Problems which impede the construction schedule. Review of off-site fabrication, delivery schedules.

- Corrective measures and procedures to regain projected schedule, if necessary. Revisions to construction schedule.
- Progress schedule during succeeding work period. Coordination of schedules.
- Review submittal -- expedite as required. Maintenance of quality standards.
- Pending changes and substitutions. Shop drawing submittals.
- Review proposed changes for:
  Effect on construction schedule and on completion date. Effect on other contracts of the project.
  Other business

[END OF PART II]

PART III: TECHNICAL SPECIFICATIONS

1. GENERAL

Furnish all necessary labor, equipment, and materials to construct various types of public services infrastructure projects as outlined in Part I General Requirements, 1. Introduction.

Tasks may involve milling existing asphaltic concrete surfaces to specified depths. Excess milled material should be transported to an asphalt reprocessing plant. The streets specified should be surfaced with Superpave asphaltic concrete mix. Additionally, tasks include necessary adjustments or replacements of existing structures, traffic control, sweeping, cleanup, placement of painted and thermoplastic pavement markings, and installation of curb, gutter, and sidewalks.

2. MOBILIZATION

A. The Contractor is solely responsible for providing security for all materials stored on- site during the construction activities.
B. The Contractor shall provide ten (10) calendar days notification to the Engineer prior to initiating mobilization to the site and initiating work. The Contractor will also provide copies of all permits that have been obtained to the engineer prior to initiating work associated with such permits.
C. The Contractor shall restrict their operations to the designated work area and ensure that construction activities do not disrupt normal operational activities of the City's services.

D. The Contractor is responsible for visually inspecting the site to note obstructions or access difficulties.

E. The Contractor is responsible for providing and/or maintaining access to the work site to facilitate all construction, inspection and testing activities.

F. The contractor shall deliver/post notifications to affected citizens and business owners seven (7) calendar days prior to construction. A form of the notification must be approved by the City prior to distribution.

3. MILLING

A. Furnish all necessary labor, equipment and materials to mill pavements as specified, and haul the milled material to the reprocessing plant.

B. The methods used for milling shall meet all applicable portions of Section 327 - Milling of Existing Asphalt Pavement, Florida Department of Transportation Standard Specifications for Road and Bridge Construction, latest revision.
C. All manhole castings and water valve boxes shall be adjusted and/or replaced by the Contractor, as specified, after milling is completed.

D. When the full street is required by these documents to be milled, the desired finished cross slope is to be 2%.

E. The unit price per square yard (SY) shall be full compensation for all work required to perform the milling, loading, hauling, sweeping, clean-up, and all incidentals necessary to complete the work specified in this section.

F. Milling of existing asphalt speed humps and speed tables is required as specified in the plans.

4. CONCRETE CURB AND GUTTER (INSTALLATION)

A. All Concrete Curb and Gutter work shall conform to the requirements of Section 520, "Concrete Gutter, Curb elements and Traffic Separator," of the FDOT Standard Specifications and placed in conformity with the lines, grades, dimensions and notes shown in the contract plans.

B. Forms for this work shall be made of either wood or metal and shall have a depth at least equal to the Plan vertical dimensions for the depth of the concrete being deposited against them. They shall be straight and free from warp or bends and of sufficient strength and rigidity, when staked, to resist the pressure of the concrete without deviation from line and grade. If wooden forms are used, they shall be of a cross-section approved by the Project Manager and shall have a flat surface on top. The Contractor shall use flexible forms for all curb and gutter constructed on a radius.

C. Excavation shall be to the required depth, and the foundation material upon which these items are to be placed shall be compacted as specified in Section 120-9, "Compaction Requirements" of the FDOT Standard Specifications.

D. The concrete shall be placed in the forms and tamped and spaded in place so that all honeycombs will be eliminated, and sufficient mortar brought to the surface. The top of the section shall be floated smooth, and its edges rounded to the radius shown on the plans. No concrete shall be placed during unfavorable weather conditions.

E. Except for machine placed concrete, at the option of the Contractor, joints may be formed by the use of dummy joints (either formed or sawed) or by the use of sheet metal templates. If sheet metal templates are used, they shall be at least as long as the depth of the curb section. They shall be set perpendicular to the top and face of the curb form and shall be held firmly in place during the placing of concrete. Templates shall remain in place until the concrete has set sufficiently to hold its shape, but shall be removed while the forms are still in place.

For machine placed concrete, unless an alternate method is approved by the Project Manager, contraction joints shall be sawed. The joints shall be sawed as soon as the concrete has hardened to the degree that excessive raveling will not occur and before uncontrolled shrinkage cracking begins.

Contraction joints shall be spaced at intervals of ten feet (10') except where a lesser interval is required for closure, but no section shall be less than four feet (4') in length. On medians and traffic separators, cuts shall align across from each other. Cuts shall also align with contraction joints of sidewalks adjacent to the curb.

Expansion joints shall be constructed at all structures, at all ends of curb returns, except that expansion joints shall not be constructed within twenty (20) feet of an island nose. They shall be located at intervals of 500 feet between other expansion joints or ends of a run. The expansion joint filler shall be ½ inch in width and shaped to the cross section of the curb.

F. The forms shall be removed within twenty-four (24) hours after the concrete has been placed, and minor defects then filled with mortar composed of one part of Portland cement and two parts of fine aggregate. Plastering will not be permitted on the face of the curb or the gutter. Any rejected curb and gutter shall be removed and replaced at no additional cost to the City. All exposed surfaces shall be given a brush finish while the concrete is still green. For any surface areas, however, which are too rough or where other surface defects make additional finishing necessary, the Project Manager may require that the curb be rubbed to a smooth

surface with a soft brick or wood block, with water used liberally. Also, if necessary further to provide a suitable surface, the Project Manager may require additional rubbing, using a thin grout or mortar, either of which additional rubbing shall be at no additional cost to the City.

G. When surface finishing is completed, the curb and gutter shall be cured per applicable paragraphs of Section 520-8, of the FDOT Standard Specifications.

H. After the concrete has set sufficiently, but not later than three (3) days after pouring, the spaces in front and back of the curb and gutter sections shall be refilled to the required elevation, with suitable material, adequately compacted. In sections where sidewalk is to abut the curb, the backfill shall be placed and compacted to a suitable depth for the placing of sidewalk forms. In all other sections of the work, the back of the curb shall be backfilled to the required elevation with suitable material, which shall be placed and thoroughly compacted in layers of not more than six inches (6") in thickness.

I. Where a base is to be constructed adjacent to a curb and gutter, the curb and gutter shall be properly backfilled and shall set for a period of not less than seven (7) days before any base material is placed against it.

J. The top and face of the finished curb and gutter shall be true and straight, and the top surface of curbs shall be uniform width, free from humps, sags, or other irregularities. When a straightedge ten feet (10') long is laid on the top or face of the curb or on the surface of gutters, the surface shall not vary more than 0.01 foot from the edge of the straightedge, except at grade changes or curves.

K. Full compensation for conforming to the requirements of this Section shall be considered as included in the unit price paid per linear foot (LF) for constructing concrete curb, curb and gutter, or valley gutter, complete in place and accepted, and no additional compensation will be allowed therefore.

5. CONCRETE SIDEWALKS (INSTALLATION)

A. All Concrete Sidewalk work shall conform to the requirements of Section 522, "Concrete Sidewalks and Driveways", of the FDOT Standard Specifications and these Special Provisions and placed in conformity where so ordered by the Project Manager.

B. Forms for this work shall be made of either wood or metal and shall have a depth at least equal to the Plan vertical dimensions for the depth of concrete being deposited against them. They shall be straight, free from warp or bends, and of sufficient strength and rigidity, when staked, to resist the pressure of the concrete without deviation from line and grade. If wooden forms are used, they shall be of cross-section approved by the Project Engineer and shall have a flat surface on top. The Contractor shall use flexible forms for all headers constructed on a radius.

C. Tree roots within the sidewalk area shall be removed to a minimum depth of one foot (1') below the specified subgrade surface. If a contractor must cut tree roots, sharp cuts shall be made. All roots greater than 2" shall be cut clean with a hand saw. The contractor shall hand dig near the roots and saw the roots, heavy mechanical equipment shall not be used. Broken roots shall be sawed 2" behind the ragged end. Roots smaller than 2" may be cut with a sharp-edged hand tool. Crushed or torn roots are more likely to allow decay. Sharply cut roots produce a flush of new roots helping the tree to recover from its injury. If tree roots larger than 6" must be cut, the Contractor shall inform the City Engineer or his representative prior to cutting for field direction. All boulders, organic material, soft clay, spongy material and any

other objectionable material shall be removed and replaced with material approved by the Engineer.

Before placing the forms for sidewalks, the surface upon which they are to be built shall be brought to the specified line, grade and elevation and uniformly compacted to a minimum 85 percent of AASHTO T-99 density. The materials shall be compacted at a moisture content such that the specified density can be uniformly attained. If necessary to attain the specified density, water shall be added to the material, or the moisture content shall be lowered by manipulation or allowing the material to dry, as is appropriate.

Fill areas including cut areas under the sidewalk which have been excavated more than six inches (6") below the bottom of sidewalk shall be compacted to a minimum of 95 percent of AASHTO T-99 density. The area to be compacted is defined as that area directly under the sidewalk and one foot (1') beyond each side of the sidewalk when right-of-way allows.

D. Transverse expansion joints shall be placed at intervals not exceeding eighty feet (80'), and at all places where a walk intersects or abuts a curb, driveway, building, other sidewalk or fixed objects. Expansion joints shall be constructed at each side of structures and at ends of curb returns, except that expansion joints shall not be constructed within twenty feet (20') of an island nose. Expansion joints shall be filled with ½ inch thick premolded joint filler conforming to the provisions in Section 932 of the Standard Specifications. The joint filler shall be shaped to the cross section of the sidewalk, shall extend from the surface to the subgrade, and shall be at right angles to the sidewalk surface.

Contraction joints shall be sawed and shall be at intervals of four (4) to six (6) feet, or as shown on the plans. A slot approximately 3/16 inches wide and not less than 1 ½ inches deep shall be cut with a concrete saw after the concrete has set, and within twenty-four (24) hours of concrete being poured. Open type joints shall not be allowed.

E. Just prior to placing the concrete, the subgrade shall be moistened. The concrete shall be placed in the forms and tamped and spaded in place so that all honeycombs will be eliminated and sufficient mortar brought to the surface. Thereafter, the surface shall be brought to a smooth even finish by means of a wooden float. No concrete shall be poured during unfavorable weather conditions.

F. The concrete shall be given a broom finish. The top of the finished sidewalk shall be true and straight, and the top surface of sidewalks shall be uniform width, free from humps, sags, or other irregularities. When a straightedge ten feet (10') long is laid on the top of the sidewalk the surface shall not vary more than 0.01 foot from the edge of the straightedge, except at grade changes or curves.

G. When surface finishing is completed, the sidewalk shall be cured per applicable paragraphs of Section 520-8, of the Standard Specifications. After concrete has set sufficiently, but no later than three (3) calendar days after pouring, the space alongside the sidewalk shall be backfilled, compacted and sodded or seeded as shown on the striping plans.

H. Full compensation for conforming to the requirements of this Section shall be considered as included in the unit price paid per Square Yard for constructing sidewalks, complete in place and accepted, and no additional compensation will be allowed therefore.

6. LEVELING/RESURFACING

A. Material:

1. The material used for leveling shall be Superpave asphaltic concrete.

2. The material used for resurfacing shall be Superpave asphaltic concrete. Friction Course mixes may be used as specified by the City Project Manager.

B. **Construction Requirements:**

1. The leveling and resurfacing shall commence within three (3) working days after the milling of each street. The time limit for streets where castings or other water valve boxes need to be adjusted or replaced will be three (3) working days after the casting or water valve box has been adjusted or replaced.

2. The methods used for re-paving shall meet all applicable portions of Section 330 - Hot Mix Asphalt General Construction Requirements, Florida Department of Transportation Standard Specifications for Road and Bridge Construction, latest revision.
3. The Contractor shall contact all utility and TV cable companies for location of their facilities. The exact location of their facilities, type of material used by the utility and TV cable, etc. shall be determined by the Contractor prior to any excavation work required by this Contract.

4. The Contractor shall be responsible for the protection of all pavements, sidewalks, and other improvements within the work area. All damage to such improvements, as a result of the Contractor's operations, beyond the limits of the work of pavement replacement as described herein, shall be repaired by the Contractor at the Contractor's expense.

5. Testing by City: Testing may be completed by an independent testing laboratory. If core borings are done to determine thickness and density, the Contractor is responsible for filling these holes in the pavement.

C. **Quality Control:**

1. The Contractor shall have a Quality Control Technician who has been certified by the State of Florida Department of Transportation as a Certified Asphalt Plant Technician, available at the asphalt plant at all times the Contractor is producing asphalt mix for use on this project.

2. The Contractor's quality control procedures, inspection and tests shall be documented, and that information shall be available for review by the Project Manager or his representative, throughout the course of the Contract.

3. The mix design shall meet the requirements of Section 334-3.2 for the type of Superpave asphalt indicated in the plans as set forth in Florida Department of Transportation Standard Specifications for Road and Bridge Construction, latest revision. Friction course asphalt concrete must meet the requirements of Section 337 for the type of friction course indicated in the plans. Submit a Notarized Certification of Specification Compliance letter on company letterhead to the Engineer stating that all material produced and placed on the project was in substantial compliance with the specifications. The City may run independent tests during the project to determine the acceptability of the material.

7. UTILITY ADJUSTMENTS & REPLACEMENTS

A. **Adjusting Existing City Valve Boxes:**

1. The Contractor is to provide the necessary equipment to adjust the castings without damaging the existing structure. Adjustment would include being able to screw the top portion of the valve box up or down. Water valves that cannot be adjusted either up or down must be replaced under Section 6.2. If the structure is damaged, the Contractor is to replace the structure to its original condition at their cost.

2. The materials and construction methods for this work shall conform to applicable portions of Section 425 Inlets, Manholes and Junction Boxes, Florida Department of Transportation Standard Specifications for Road and Bridge Construction, latest revision.

3. The quantities to be paid for under this section shall be for the number of valve boxes, adjusted physically.

4. Structures, sections of structures, valve box sections or other items necessary for adjustment that are considered debris and that has been removed by the Contractor as part of the progress of work shall be removed from the project site by the Contractor at the end of each day's work. The Contractor is to remove all debris deposited in the structure as a result of the work performed.

B. **Castings:**

1. The Contractor shall notify the Project Manager or his representative on any questions regarding the prior adjustment or replacement of manhole frames or valve boxes.

2. Manhole frame and covers and valve boxes to be replaced are to be furnished by the Contractor.

3. Castings damaged by construction shall be replaced at no additional cost to the City of St Pete Beach.
4. All castings shall be adjusted and replaced in accordance with the manufacturers recommended requirements.

5. Adjusted or replaced castings shall be set at the grade of the proposed asphalt after compaction with not more than ¼" variation in 10 feet.

8. STRIPING AND MARKINGS

A. **Temporary Striping**: Temporary traffic stripes and markings will be required. Temporary markings shall be placed immediately after milling on any arterial/collector roads or within the immediate proximity of a school, and immediately after final asphalt on all roads. Before opening any re-paved area to traffic, temporary markings shall be applied as specified by the Project Manager. The paint used for this work shall be in accordance with the FDOT specification.

B. **Permanent Striping**: The Contractor shall place permanent traffic stripes and markings in accordance with reference points and alignment gathered by the Contractor prior to milling or overlay or in accordance with striping plans provided by the City of St Pete Beach. The Contractor shall use an Alkyd/Maleic thermoplastic compound and application methods meeting the requirements of Section 711 – Thermoplastic Pavement Markings, Florida Department of Transportation Standard Specifications for Road and Bridge Construction, latest revision. The thermoplastic compound shall be extruded on the pavement surface in a molten state by mechanical means with surface application of glass spheres, and upon cooling

to ambient pavement temperature shall produce an adherent pavement marking of the specified thickness and width and capable of resisting deformation.

C. A minimum of 21 days curing time after asphalt placement shall be allowed before the placement of any thermoplastic marking commences, with all thermoplastic markings to be completed within 28 days after asphalt placement.

D. The color of the thermoplastic shall be white, yellow, or blue as specified by the M.U.T.C.D.; and revisions thereof.

9. CLEANUP AND DUST CONTROL

A. The Contractor shall furnish and operate a minimum of one (1) mechanical sweeper for the purpose of removal of loose milled material. After milling and before resurfacing, the Contractor shall water the streets as necessary to prevent dust nuisance from his operations or from traffic.

B. Upon completion of the work on each street and before acceptance, the Contractor shall remove all surplus and discard materials and rubbish; shall restore in an acceptable manner all property, both public and private, which has been damaged during the prosecution of the work and shall leave each street in a neat and presentable condition throughout the entire length of the work under Contract. This shall include, but not be limited to the overspray of tack, and shall be completed within one (1) week after the resurfacing of each street.

C. Failure of the Contractor to comply with the Project Manager cleanup orders may result in an order to suspend work until the condition is corrected. No additional compensation will be allowed as a result of such suspension.

D. 5% of the value of the work performed may be retained, should at the opinion of the City, restoration not be completed.

E. The cost of all work regarding Cleanup and Dust Control shall be included in the prices for other pay items, which are included in the Contract.

F. The Contractor shall reflect in the schedule, which shall be approved prior to construction, the time required for complete restoration. The Contractor shall strictly adhere to the schedule.

G. The Contractor shall take the necessary measures to prevent siltation and other construction related materials including tack coatings from entering storm inlet structures and manhole structures during the road repaving operation.

10. TRAFFIC CONTROL, STREET CLOSURES, DETOURS AND BARRICADES

A. The Contractor shall comply with all applicable portions of Section 102 – Maintenance of Traffic – Florida Department of Transportation Standard Specifications for Road and Bridge Construction, latest revision, and City requirements for traffic control.

B. The Contractor shall furnish all necessary barriers, lights, signs, and flag persons, to advise the public of detours and construction hazards. All flag persons on site shall be properly qualified.

C. The Contractor shall be responsible for compliance with additional public safety requirements, which may be ordered by the Project Manager or his authorized representative.

D. Failure of the Contractor to comply with the public safety requirements may result in an order to suspend work until the condition is corrected. No additional compensation will be allowed as a result of such suspension.

E. The Contractor shall furnish and install, and upon completion of the work, promptly remove all signs and warning devices.

11. SODDING

A. **Description:** All sodding shall conform to the requirements of Section 570, FDOT Manual on Road and Bridge Construction, latest revision.

B. **Materials:**

1. **Sod:** Sod shall be Argentine Bahia as determined by the Project Engineer. Where sodding will adjoin, or be in sufficiently close proximity to, private lawns, other types of sod may be used if desired by the affected property owners and approved by the Project Engineer. The sod shall be taken up in commercial-size rectangles, preferably 12-inch by 24-inch or larger. Maximum allowable deviation from the standard widths and lengths shall be five percent (5%). Broken pads and torn or uneven ends will not be acceptable. The sod shall be sufficiently thick to secure a dense stand of live grass. The sod shall be live, fresh and uninjured, at the time of planting. It shall have a uniform soil thickness of three-fourths inch (3/4"), plus or minus one-fourth inch (1/4"), at the time of cutting. Measurement for thickness shall exclude top growth and thatch. The soil mat shall adhere firmly to the roots such that it will not break, crumble, or tear during handling and placing. No muck or heavy peat soil grown sod will be accepted. All sod shall be 97% free of weeds and other grasses. All sod shall comply with State and Federal laws with respect to inspection for plant diseases and insect infestation. An inspection certificate, required by law, may be requested by the Project Engineer for each shipment. All sod shall be placed as soon as possible after being dug and shall be shaded and kept moist from the time it is dug until it is planted. No sod which has been cut for more than 48 hours may be used unless specifically authorized by the Project Engineer.

2. **Commercial Fertilizer:** All commercial fertilizers shall comply with the State fertilizer laws. All fertilizers shall be uniform in composition, free flowing and suitable for application by mechanical spreader equipment. The chemical designation of the fertilizer shall be 12-8-8 or equivalent ratio. At least 50% of the phosphoric acid shall be from normal super phosphate or an equivalent source which will provide a minimum of two units of sulfur. The amount of sulfur shall be indicated on the quantitative analysis card attached to each bag or other container.

3. **Water:** The water may be obtained from any approved spring, pond, lake, stream or municipal water system. The water shall be free of excessive and harmful chemicals, acids, alkalies, or any substance which might be harmful to plant growth or obnoxious to traffic. Salt water shall not be used. The Contractor shall pay for all water used for the installation of sod.

C. **Construction Methods:**

1. **Soil Moisture:** Rough and fine grading shall be carefully executed to ensure that the final placed sod will conform to existing grades, free of depressions, "bird baths" or

bumps. The area on which sod is to be placed shall contain sufficient moisture for optimum results. During periods of high temperature and after all unevenness in the soil surface has been corrected, the soil shall be lightly irrigated immediately prior to laying the sod. Muddy soil shall not be created.

2. **Placing Sod:** The first row of sod shall be laid in a straight line with subsequent rows placed parallel to and tightly against each other. Lateral joints shall be staggered to promote more uniform growth and strength. Care shall be exercised to ensure that the sod is not stretched or overlapped and that all joints are butted tight in order to prevent voids which would cause air drying of the roots. The sod shall form a solid mass. The sod shall be firmly embedded by light tampering and rolling to ensure contact with the subgrade and to provide a smooth, even surface to eliminate voids under the root system making dry spots. The sod shall be staked on all slopes of 2:1 or steeper with pegs or similar material, driven through the sod blocks, six inches (6") into firm earth at suitable intervals.

3. **Watering:** The sod shall be watered with a fine spray immediately after placing, such that the underside of the new sod pad and soil immediately below the sod are thoroughly wet. The sod shall be kept in moist condition for the duration of the contract period (and in no case less than 4 weeks except in dry season it shall be 8 weeks). The moistened condition shall extend to at least to the full depth of the rooting zone. Water shall not be applied between the hours of 10:00 a.m. and 6:00 p.m.

D. **Maintenance:** The Contractor shall, at no additional expense to the City, maintain the sodded areas in a satisfactory condition until final acceptance of the project. Such maintenance shall include the filling, leveling, and repairing of any washed or eroded areas, as deemed necessary by the Project Engineer. The Project Engineer, at any time, may require resodding of any areas in which the establishment of the grass stand does not appear to be developing satisfactorily. The Contractor shall mow lawns as soon as there is enough top growth to cut with mower set at height of two inches (2") and shall repeat mowing as required throughout the duration of the project, to maintain such height. The Contractor shall not delay mowing until grass blades bend over and become matted and shall not mow when grass is wet.

E. **Measurement and Payment:** Full compensation for conforming to the requirements of this Section shall be considered as included in the unit price paid per square yard (SY) for furnishing, placing, maintaining and replacing sod, complete in place and accepted, and no additional compensation will be allowed therefore.

[END OF PART III]

SECTION 01425
FDOT STANDARDS REFERENCE

PART 1 GENERAL

1.01 Section Includes

Instruction on the use and applicability of FDOT standards on the project

1.02 Requirements

A. The Florida Department of Transportation, Standard Specifications for Road and Bridge Construction, latest non-metric edition ("Standard Specifications"), and Standard Plans for Road Construction, latest non-metric edition ("Standard Plans") are referenced herein as source documents for applicable technical specifications and construction details to be used in the construction of this project. The term "latest edition" refers to the latest edition implemented by FDOT and includes all FDOT implemented supplements at the time of bid advertisement.

B. Method of Measurement and Basis of Payment is to be in accordance with the Florida Department of Transportation Standard Specifications. Any item which is detailed in the Plans and for which material types, sizes and quality are also called out, the "Standard Plans" shall take preference over the plan detail unless otherwise directed by the Engineer.

C. Where the FDOT Standard Specifications use the reference "Department", replace "Department" with "Owner", except for when such reference is to Department Standards and evaluation criteria.

D. The Standard Plans are referenced herein as a source document for applicable construction items and details called for in the plans for which a specific plan detail is not provided. The Contractor shall construct the items called for in the plans in accordance with the "Standard Plans" unless otherwise defined or detailed in the plans or as directed by the Owner, Engineer or authorized representative.

E. The Standard Plans are available for download from the FDOT website at: https://www.fdot.gov/design/standardplans

F. In case of conflict, the Technical Specifications takes precedence over FDOT specifications for a particular construction requirement.

G. Copies of the latest implemented edition and implemented supplements of the Florida Department of Transportation Standard Specifications are available for download from the FDOT website at: https://www.fdot.gov/programmanagement/Implemented/SpecBooks

H. The Contractor shall inform the Owner and Engineer in writing of any specification that the Contractor feels is ambiguous or conflicting with other plan notes and details prior to the construction of the associated item. The Engineer will determine which information is to be used for construction. The Contractor is responsible for the removal and replacement of any item improperly constructed resulting from a misinterpretation of the specifications at no additional cost to the Owner.

PART 2 PRODUCTS - Not Used

PART 3 EXECUTION

3.01 General

The Contractor shall use Divisions Two (II) and Three (III) of the FDOT Specifications as they relate to methods of construction and material types and quality for the appropriate construction items contained within this project.

END OF SECTION

III. BID FORM

See attached Excel document.

IV. GENERAL CONTRACT TERMS

REQUEST FOR PROPOSALS
Civil On Call Construction Services

REQUEST FOR PROPOSAL SUMMARY
The City of St Pete Beach has issued this Request for Proposal (RFP) to solicit competitive bids and proposals from Proposers for a Task Work Order driven Civil On-Call Construction Services Contract. The successful bidder shall provide all labor, materials, equipment, tools, consumables, transportation, and incidentals to provide Public Services capital improvement projects construction services on an 'as needed' basis for the City of St Pete Beach.

The "City" intends to **award multiple contracts** to vendors who can provide the best value for services. Vendors may submit proposals for all, some, or only one of the requested line items or categories. **It is not mandatory to submit a proposal for every item listed.** A bidder may bid on any, all, or none of the items. The "City" reserves the right to select multiple vendors to optimize cost-efficiency and capability across different segments of the project. Proposals will be evaluated based on capability, cost, and capacity to perform the specific line items requested.

PROPOSAL SUBMITTALS
Proposal documents must include a signed/notarized Contractor's Proposal Submittal, Bid Form, References, Contractor's license and insurance certificates, and Public Entity Criminal Affidavit. The Contractor shall submit electronic proposals only. Bidders must submit electronically only through Bonfire platform. When bidding electronically, only one copy should be submitted.

Proposals shall include the following:

- A signed and notarized Proposer's Contract Proposal.
- Current proof of insurance certificate.
- A list of references and minimum qualifications as outlined in Section V.
- One copy of bid electronically submitted to Bonfire platform.

The City is not responsible for any Addendums or other supplementary information that is not received due to non-submittal of the aforementioned information. Please refer back to the city website (http://www.stpetebeach.org/news-and-links/city-projects.html) for additional project information as it becomes available. The City reserves the right to decide whether to answer addendums or not. The City is not required to provide any additional information.

Proposers or persons wishing to submit a proposal on this project shall be licensed, and insured in accordance with the City's requirements

The City of St. Pete Beach reserves the right to reject any or all proposals or parts of proposals, or accept any proposal or part thereof deemed to be in the best interests to the City of St. Pete Beach.

Electronic proposals must be submitted by **9:00 AM on April 08, 2026 (Deadline),** clearly marked as: **"Civil On Call Construction Services."**

PRE-PROPOSAL MEETING
An optional pre-proposal meeting will be held on **March 18, 2026 at 10:00 AM EST** via Microsoft Teams conference/Teleconference. Please contact the City's Procurement Manager (purchasing@stpetebeach.org) for a meeting invitation and instructions.

WRITTEN REQUESTS FOR INTERPRETATIONS/CLARIFICATIONS
No oral interpretations will be made to any firms as to the meaning of the scope of work or any other

contract documents included in this **RFP.** All questions pertaining to the terms and conditions or scope of work of this Request for Proposal **(RFP)** must be sent in writing via email only to the City Procurement Manager (purchasing@stpetebeach.org) and shall be received no later than **10:00 AM EST on March 25, 2026.** Responses to questions may be handled as an Addendum if the response would provide clarification to the requirements of the **RFP**. All such Addenda shall become a part of the contract documents. The City will not be responsible for any other explanation or interpretation of the proposed **RFP** made or given prior to the award of the contract. The City will not respond to questions received after the specified deadline. The City reserves the right to respond to any and all questions but is not required to do so. If the Proposer discovered the opportunity through the online platform (Bonfire), do not submit questions through these platforms. **Only questions emailed directly to the City Procurement Manager will be answered.**

BEGINNING DATE
The Proposer shall, within ten (10) business days after receipt of the Notice of Award and before commencement of any operations hereunder, execute the Agreement. Additionally, the Proposer shall, within twenty (20) business days after receipt of the Notice of Award, provide all required documentation to the City.

COMPLETION OF WORK
The work will be completed on an as-needed basis. Each location that needs to be surveyed, repaired and/or worked on will constitute it's own "job". This will be a three (3) year initial contract with the option to be extended for two (2) additional one (1) year periods upon mutual consent of both parties. It is the intent of the City of St Pete Beach to award these services to more than one Contractor/Vendor.

COSTS INCURRED BY PROPOSERS
All expenses involved with the preparation and submission of proposals to the City, or any work performed in connection therewith, shall be borne solely by the Proposers. No payment will be made for any responses received or for any other effort required of or made by; the Proposer's prior to contract commencement.

ORAL PRESENTATION
The City may require an oral presentation of the proposal at the Evaluation Committee's discretion. This could also include a formal interview of any and all members of the Proposer's contract management staff.

CONFLICT OF INTEREST
The Proposer represents that it presently has no interest and shall acquire no interest, either direct or indirect, which would conflict in any manner with the performance or services required hereunder, as provided for in FL Stat. 112.311. The Proposer further represents that no person having any interest shall be employed for said performance.

The Proposer shall promptly notify the City's representative, in writing, by certified mail, of all potential conflicts of interest for any prospective business association, interest, or other circumstance, which may influence or appear to influence the contractor's judgment or quality of services being provided hereunder. Such written notification shall identify the prospective business association, interest or circumstance, the nature of work that the Proposer may undertake and request an opinion of the city as to whether the association, interest or circumstance would, in the opinion of the City, constitute a conflict of interest if entered into by the Proposer. The City agrees to notify the Proposer of its opinion by certified mail within thirty days of receipt of notification by the Proposer.

LATE PROPOSAL OR MODIFICATIONS
Modifications in writing received prior to the time set for the proposal submittal will be accepted. Proposal modifications received after the time set for the proposal submittal will not be considered.

RELATED PARTIES AND MULTIPLE PROPOSALS

Where two (2) or more related parties each submit a proposal or multiple proposals are received from (1) Proposer, for any such contract, such proposals shall be judged non-responsive. Related parties mean Proposers or the principles thereof, which have a direct or indirect ownership interest in another Proposer for the same contract or in which a parent company or the principles thereof where one (1) Proposer has a direct ownership interest in another Proposer for the same contract.

RIGHT TO AUDIT
The City of St. Pete Beach reserves the privilege of auditing a Proposer's record as such records relate to purchases or work between the City and said Proposer. Records should be maintained for three years from contract date.

VARIANCE FROM STANDARD TERMS & CONDITIONS
All standard terms and conditions stated throughout the RFP apply to this contract except as specifically stated. This should be fully understood by Proposers prior to submitting a proposal.

ASSIGNMENT
The Proposer shall perform this contract. No assignment or subcontracting shall be allowed without prior written consent of the City. If a Proposer intends to subcontract a portion of this work, the Proposer must disclose that intent in the proposal. In the event of a corporate acquisition and/or merger, the Contractor shall provide written notice to the City within thirty (30) business days of Proposer's notice of such action or upon the occurrence of said action, whichever occurs first. The right to terminate this contract, which shall not be unreasonably exercised by the City shall include but not be limited to, instances in which a corporate acquisition and/or merger represent a conflict of interest or are contrary to any local, state, or federal laws. Action by the City awarding a proposal to a firm that has disclosed its intent to assign or subcontract in its response to the RFP, without exception shall constitute approval for purpose of this Agreement.

LOBBYING Lobbying of Evaluation Committee members, City employees, or elected officials regarding request for proposals, request for qualifications, bids or contracts, during the pendency of bid award or bid protest, by the bidder/proposer/protestor or any member of the bidder's/proposer's/protestor's staff, an agent of the bidder/proposer/protestor, or any person employed by any legal entity affiliated with representing an organization that is responding to the request for proposal, request for qualification, bid or contract, or has a pending bid protest is strictly prohibited either upon advertisement or on a date established by the City and shall be prohibited until either an award is final or the protest is finally resolved by the City Manager or Procurement Manager; provided, however, nothing herein shall prohibit a prospective bidder/proposer from contacting City departments to address situations such as clarification and/or questions related to the procurement process. For purposes of this provision, lobbying activities shall include but not be limited to, influencing or attempting to influence action or non-action in connection with any requests for proposal, request for qualification, bid or contract through direct or indirect oral or written communication or an attempt to obtain goodwill of persons and/or entities specified in this provision. Such actions may cause any request for proposal, request for qualification, bid or contract to be rejected.

ADDITIONAL REQUIREMENTS
The City reserves the right, by change order, to unilaterally add or delete locations/services, either collectively or individually, at the City's sole option, at any time after award has been made as may be deemed necessary or in the best interest of the City. In such case, the Proposer will be required to provide or reduce services to this contract in accordance with the terms, conditions, and specifications.

SERVICES AGREEMENT
A written agreement incorporating the RFP and the successful proposal will be prepared by the City, signed by the successful Proposer, and presented to the City Commission for approval and signature.

INTEGRITY OF REQUEST FOR PROPOSAL DOCUMENTS
Proposers shall use the original RFP forms provided within the RFP and enter information in the spaces where a response is requested. Proposers may use an attachment as an addendum to the RFP forms if sufficient space is not available on the original form for the Proposer to enter a complete response. Any modifications or alterations to the original RFP documents by the Proposer, whether intentional or otherwise, will constitute grounds for rejection of the RFP. Any such modifications or alterations a Proposer wishes to propose must clearly be stated in the Proposer's RFP response and presented in the form of an addendum to the original RFP documents.

RESPONSIBILITY OF THE CITY MANAGER OR DESIGNEE
The term "City Manager or designee" wherever used in this Contract shall be the City of St. Pete Beach or its duly authorized representative. Notices of any change in the City Manager or designee shall be given in writing by the City to the Contractor. The City Manager or designee shall have full authority to interpret the contract and requirements and shall determine acceptance of the work under this Contract and every question relative to the fulfillment of the terms and provisions therein. It shall be the duty of the City Manager or designee to enforce the contract terms in a fair and unbiased manner.
If a variation from any requirements is allowed, the City Manager or designee shall grant the same in writing with the reasons for his action outlined, and such action will not invalidate or change the Contract in any other manner.

EXAMINATION OF SITE
Proposer shall carefully examine project site and be familiar with the work required for the project, investigate all site conditions that may affect execution of work as detailed in the construction documents. Contact the City's Procurement Manager or their designee for changes or alterations before proceeding.

ASSURANCES
The responding Proposer shall provide a statement of assurance that the Proposer is not presently in violation of any statutes or regulatory rules that might have an impact on the firm's operations. All applicable laws and regulations of the State of Florida, and ordinances and regulations of the City of St. Pete Beach will apply.

ASSIGNMENT AND TRANSFER OF CONTRACT
The Proposer shall not assign or transfer this Agreement or any part thereof or any interest therein without consent in writing of the City and the Proposer's Surety, and any such assignment or transfer without such written consent shall be null and void.

SUBCONTRACTS
The Proposer shall not subcontract this Agreement or any part thereof or any interest therein without consent in writing of the City and the Proposer's Surety. Any Subcontractor approved by the City will be subject to the same standards and qualifications as stated in this Contract.

PAYMENT
Payment shall be made to the Proposer for work performed under this Contract for the quantities of work as determined in accordance with Payments for Work Completed and Payments Withheld of this Contract. Payment for extra work will be made in accordance with the Changes in Work, Contract Amount, and Contract Time sections below.

PERIOD OF PERFORMANCE
The target completion for the base Scope of Services is January 2027, corresponding to delivery of the Design-Build Readiness Package. The City reserves the right, at its sole discretion and subject to funding

availability, to amend this Agreement to extend the Consultant's services through final (100%) design. Any additional services shall be authorized by written amendment and negotiated in accordance with the Consultants' Competitive Negotiation Act (Section 287.055, Florida Statutes).

CHANGES IN THE WORK

Without invalidating the Contract, the City may, at any time or from time to time, order additions, deletions or revisions in the work authorized by written Change Orders or directives. Upon receipt of a Change Order, the Proposer will proceed with the work involved. All such work shall be executed under the applicable conditions of the Contract documents. If any Change Order causes an increase or decrease in the Contract Amount or any extension or shortening of the Contract Time, an equitable adjustment will be made.

Additional Work performed by the Proposer without authorization of a Change Order will not entitle them to an increase in the Contract Amount or any extension of the Contract Time, except in the case of an emergency (subject to approval by City Manager or designee).

It is the Proposer's responsibility to notify their Surety of any changes affecting the general scope of the Work or change of the Contract Amount and the amount of the applicable bonds shall be adjusted accordingly, and an amended bond document furnished to the City. In the event the City directs the Proposer to make a change in the Work, and if the City and the Proposer do not arrive at a mutually acceptable increase or decrease in the Contract Amount, the Proposer shall not use any such lack of mutual acceptance as a basis or cause to stop or otherwise delay the progress or the execution and completion of any of the work ordered, directed or required pursuant to the Contract Documents.

If the Proposer believes an event or situation has occurred which justifies a change in the Contract Amount or Contract Time, they shall deliver a written notice to the City Manager or designee. Each such written notice shall be delivered promptly and no later than fifteen (15) business days after the Proposer first discovered the occurrence. The Proposer shall be deemed to have waived the right to collect any and all costs incurred more than fifteen (15) business days prior to the date of delivery of the written notice and shall be deemed to have waived the right to seek an extension of the Contract Time with respect to any delay in the Progress Schedule which accrued more than fifteen (15) business days prior to the date of delivery of the written notice.

Any such notice shall include sufficient detail to explain the basis of entitlement to a claim for an adjustment to the Contract Amount of Contract Time. When requested by the City Manager or designee, the Proposer shall furnish any additional information and details as may be required to determine the facts or allegations involved, which shall be provided within fifteen (15) business days of the request unless a longer time period is allowed by the City Manager or designee.

The Proposer shall prepare proposals detailing proposed adjustments to Contract Amount and/or Contract Time and submit them to the City Manager or designee within fifteen (15) business days of the City's issuance of a proposed Change Order or the Proposer's submitting a written notice of a change or claim for an adjustment to the Contract Amount or Contract Time. Proposer's proposals shall be irrevocable for a period of at least sixty (60) business days after receipt by the City. Any delay in the submittal of a complete, adequate and acceptable proposal will not justify an increase in Contract Amount or Contract Time. Proposer agrees that it shall give the City access to any and all of Proposer's and Subcontractors' books, records and other materials relating to proposed Change Orders and other claims for adjustment to Contract Amount or Contract Time.

CHANGE OF CONTRACT AMOUNT

The Contract Amount constitutes the total compensation payable to the Proposer for performing the Work. All duties, responsibilities and obligations assigned to or undertaken by the Proposer shall be at his expense

without change in the Contract Amount. The Contract Amount may only be changed by written Change Order issued by the City. Any claim for an increase in the Contract Amount shall be in writing and delivered to the City Manager or designee within fifteen (15) business days of the occurrence of the event giving rise to the claim.

All claims for adjustment in the Contract Amount shall be determined by the City Manager or designee. However, no claim for an adjustment to the Contract Amount will be considered for unforeseeable causes that were beyond the fault or negligence of the Proposer or his Subcontractors or supplier such as acts of God, floods, riots, etc. This restriction does not restrict submission of claims for additional Contract Time due to events of this nature. Any change in the Contract Amount shall be incorporated in a Change Order.

Proposer proposals or claims shall cover all aspects of the Work involved and shall be fully documented and itemized as to all costs, quantities and charges for overhead and profit. Amounts for Subcontractors or Suppliers at any tier shall be similarly supported. When determining Subcontractors' costs, the methods to be used shall be those used for the Proposer's costs, except that the term "Subcontractor" shall replace the term "Proposer," context permitting.

The value of any Work covered by a Change Order or of any claim for an increase or decrease in the Contract Amount where the Work involved is covered by unit prices contained in the Contract Documents shall be determined by application of unit prices to the quantities of the items involved. If the quantities originally contemplated are so changed in a proposed Change Order, that application of the Unit Prices to the quantities proposed will cause substantial inequity to the City or the Proposer, the applicable unit price(s) shall be equitably adjusted by mutual agreement.

If the value of work covered by a Change Order cannot be established or mutually agreed to utilizing previously established unit rates, the value shall be determined by the City on the basis of an estimate of the out-of-pocket cost and percentages that are acceptable to the City for overhead and profit.

In such case, the Proposer will submit in the form prescribed by the City an itemized cost breakdown together with supporting data.

The amount of credit to be allowed by the Proposer to the City for any such change which results in a net decrease in cost, will be the amount of the actual net decrease as determined by the City. When both additions and credits are involved in any one change, the combined overhead and profit shall be figured on the basis of the net increase, if any.

CHANGE OF CONTRACT TIME

The Contract Time may only be changed by written Change Order. Any claim for an extension in the Contract Time shall be in writing and include an analysis of the Progress Schedule as further described in the Specifications and shall be delivered to the City Manager or designee within fifteen (15) business days of the occurrence of the event giving rise to the claim. All claims for adjustment in the Contract Time shall be determined by the City Manager or designee. Any change in the Contract Time resulting from any such claim shall be incorporated in a Change Order. The Contract Time may be extended for an amount equal to time lost due to unforeseeable causes beyond the control of the Proposer (and his Subcontractors and Suppliers) if he makes a claim therefrom. Such delays shall include, but not be restricted to, acts or neglect by any separate Proposer employed by the City; fires; floods; labor disputes; epidemics; or acts of God.

All time limits stated in the Contract Documents are of the essence to the Contract. The stated time limits are agreed to be adequate to complete the work, including the procurement, manufacture and delivery of all material and equipment required, and account for any and all potential impact, delays, disruptions and costs that may be expected.

PAYMENTS FOR WORK COMPLETED
All payments under this agreement shall comply with the requirements of Florida Statutes, Section 215.422, commonly referred to as the "Prompt Payment Law." This includes timely processing of invoices and adherence to statutory interest provisions for late payments. The Contractor shall submit detailed invoices for services rendered under this agreement. Each invoice must include: Purchase Order or Contract Number, Description of services provided, Dates of service, Total amount due. Payment will be made within 45 days of receipt of a proper invoice and acceptance of deliverables, as required by Florida law. If payment is not made within the statutory timeframe, interest penalties will apply in accordance with Section 215.422, Florida Statutes. Payments will be issued via electronic funds transfer (EFT) unless otherwise agreed in writing. Contractor must provide accurate banking information to facilitate EFT.

PAYMENTS WITHHELD
The City Manager or designee may withhold, or, on account of subsequently discovered evidence, nullify the whole or part of any estimate to such extent as may be necessary to protect the City from loss on account of:

a) Defective work not remedied

b) Claims and/or liens filed or reasonable evidence indicating probable filing of claims

c) Failure of the Proposer to make payments properly to Subcontractors or for labor

d) A reasonable doubt that the Contract can be completed for the balance then unpaid

e) Damage to another Proposer

f) Failure of the Proposer to keep their work progressing in accordance with their time schedule

FINAL PAYMENTS
Upon the completion and acceptance of the work, the City Manager or designee shall issue a certificate that designates that the whole work provided for in this Contract has been completed and accepted by him under the conditions and the terms thereof and shall make the final estimate of the work. After issuance of the certificate, the entire balance found to be due the Proposer, including said retained percentage by the City in accordance with existing state laws as may be retained lawfully by said City, shall pay excepting such sums to the Proposer.

Before the approval of the final payment, the Proposer shall submit evidence satisfactory to the City that states that all payrolls, materials, bills and outstanding indebtedness in connection with this Contract have been paid.

LIENS
If at any time there shall be evidence of any lien or claim for which the City might become liable and which is chargeable to the Proposer, the City shall have the right to retain out of any payment then due or thereafter to become due, an amount sufficient for complete indemnification against such lien or claim. In the event the City has already paid to the Proposer all sums due under this contract or the balance remaining unpaid is insufficient to protect the City, the Proposer and his Surety shall be liable to the City for any loss so sustained.

RESPONSIBILITY OF THE CITY MANAGER OR DESIGNEE
The term "City Manager or designee" wherever used in the Contract shall be the City of St. Pete Beach or its duly authorized representative. Notices of any change in the City Manager or designee shall be given in writing by the City to the Proposer. The City Manager or designee shall have full authority to interpret the Plans and Specifications and shall determine the amount, quality, and acceptance of the work and supplies

to be paid for under the Contract and every question relative to the fulfillment of the terms and provisions therein. It shall be the duty of the City Manager or designee to enforce the Plans and Specifications in a fair and unbiased manner. If a variation from any requirements is allowed the City Manager or designee shall grant the same in writing with the reasons for his action outlined, and such action will not invalidate or change the Contract in any other manner.

LICENSES AND PERMITS

The Proposer shall obtain and pay for all necessary City licenses and work permits and shall faithfully comply with all laws, ordinances and regulations, (Federal, State or local) which may be applicable to the operations to be conducted hereunder, except for those permits obtained by the City. Notwithstanding the provisions above, the Proposer is responsible for non-compliance of all permit requirements, including all fines resulting from Proposer's non-compliance of said requirements.

Chapter II, Section II-4, "Registration of Licenses Obtained From Other Municipalities:" "Persons, partnerships, corporations, or other business entities doing business with the City who are not required to obtain a City occupational license, but who must have either a State or County or Municipal occupational license from another municipality, shall register such occupational license with St. Pete Beach Community Development Department. The City may charge a fee for such registration." The Proposer shall be responsible for obtaining all City, County, State and Federal permits required by those government agencies and must provide documentation of receipt of those permits prior to project commencement. This shall include a notice to commence work letter and the applicable fee, if required. Any sub-contractor hired by the Proposer awarded the project, MUST also register their license with the City.

LABOR PROVISIONS

The Proposer and his Subcontractors shall discharge, whenever ordered to do so by the City Manager or designee, any employee who is disorderly or whose conduct in the opinion of the City Manager or designee is detrimental to the prosecution of the work. No person whose age or physical condition is such as to make this employment dangerous to his/her health and safety or to the health and safety of others shall be employed on the work, and in no event shall any persons under the age of sixteen (16) years be employed. The State of Florida prevailing wage law requires that the Proposer shall fully comply with all provisions contained in Section 215.19, "Schedule of Prevailing Wage Rates for Specified Public Construction." The wage rates set forth by such determination shall apply to this project.

INSURANCE

The Proposer shall procure and maintain at his/her own expense, during the life of the Contract, liability insurance as hereinafter specified. All such insurance shall be subject to the approval of the City for adequacy of protection and shall include a provision preventing cancellation without twenty (20) business days prior notice to the City in writing. The City shall be included as an additional insured on all liability insurance. The liability insurance required is as follows: Proposer's General Public Liability and Property Damage Insurance issued to the Proposer and protecting the Proposer from all claims for personal injury, including death, and all claims for destruction of or damage to property, arising out of or in connection with any operations under this Contract, whether such operations be by the Proposer or by any Subcontractor hired by the Proposer or anyone directly or indirectly employed by the Proposer or hired by the Proposer.

The successful Proposer shall supply and maintain insurance which defends, indemnifies and holds harmless the City of St. Pete Beach, its officers, employees and agents from and against any and all liability, damage claims, demands, costs, judgments, fees, attorney's fees or loss arising directly out of acts or omissions hereunder by the Proposer or third party under the direction or control of the Proposer. Such general and excess liability coverage shall be primary to any other coverage carried by the City of St Pete Beach. Proposer must furnish the City with Certificate of Insurance prior to commencement of work. An

approved Certificate of Insurance furnished by the Proposer's carrier to guarantee the Proposer being insured with the City of St Pete Beach must be named as a certificate holder for this contract. The following minimum coverage:

- Professional Liability Insurance $2,000,000 each occurrence.
- Commercial General Liability Insurance $1,000,000.00.
- Comprehensive General Liability Insurance of $1,000,000.00 each occurrence.
- Personal Injury for $1,000,000.00 each occurrence.
- Automobile Liability $1,000,000.00.
- General Workers Compensation Insurance as required by Florida law.
- Longshore Harbor Workers Compensation Insurance

PROTECTION OF WORK AND PROPERTY
The Proposer shall continuously maintain adequate protection of all their work and materials from damage or theft and shall protect the City's property and all adjacent property from injury or loss arising in connection with activities under their Contract. The Proposer shall make good any such damage, injury, or loss, except such as may be caused by agents or employees of the City.

The Proposer shall take, use, provide, and maintain all necessary precautions, safeguards, and protection to prevent accidents, or injury to persons or property on, about, or adjacent to the site of the work. Should the situation arise that physical security is needed the Proposer will provide security on off days and holidays. The Proposer shall be responsible for all charges incurred with such action.

The Proposer shall post danger signs warning against any hazards created by the work being done under their Contract. They shall designate a responsible member of their organization on the work, whose duty shall be the prevention of accidents, and the name of the person so designated shall be reported to the City Manager or designee and City in writing. In an emergency affecting the safety of life, or of the work or adjoining property, the Proposer, without special instruction or authorization from the City Manager or designee, or City, is hereby permitted to act, at their own discretion, to prevent such threatened loss or injury, and they must take such action if so instructed or authorized by the City Manager or designee. The Proposer shall also protect adjacent property as required by law.

PROPOSAL REVIEW AND CONTRACT AWARD
Failure to submit all documents requested at the time of proposal may deem the Proposer's proposal ineligible for award. The City of St. Pete Beach reserves the right to reject any or all proposals or parts of proposals. The contract shall be awarded by written notice to the responsible and responsive Contractor whose proposal is determined in writing to be the most advantageous to the City, taking into consideration the price and other criteria set forth in this request for proposals. The City may waive any informality.

LOCAL, STATE AND FEDERAL COMPLAINCE REQUIREMENTS
The laws of the State of Florida do apply to any purchase made under this Request for Proposal. Proposers shall comply with all local, state, and federal directives, orders and laws as applicable to their proposal and subsequent contracts include but not limited to Equal Employment Opportunity, Minority Business Enterprise, and OSHA as applicable to this contract.

Compliance with Fla. Stat. 448.095:

- Proposer agrees to comply with all applicable portions of Fla. Stat. 448.095. Proposer must use the

U.S. Department of Homeland Security's E-Verify System, hhtps://e-verify.uscis.gov/emp, to verify the employment eligibility of all employees hired on or after January 1, 2021 during the term of this Agreement.

- Subcontractors (i) Proposer shall also require all subcontractors performing work under this Agreement to use the E-Verify system for any employees they may hire during the term of this Agreement. (ii) Subcontractors shall provide Proposer with an affidavit stating the subcontractor does not employ, contract with, or subcontract with an unauthorized alien, as defined by Fla. Stat. 448.095 (iii) Proposer shall provide a copy of such affidavit to the City upon receipt and shall maintain a copy for the duration of the Agreement.

- Proposer must provide evidence of compliance with Fla. Stat. 448.05 by January 1, 2021. Evidence may consist of, but is not limited to, providing notice of Proposer's E-Verify number.

- Failure to comply with this provision is a material breach of the Agreement, and the City may choose to terminate the Agreement at its sole discretion. Proposer may be liable for all costs associated with the City securing the same services, inclusive, but not limited to, higher costs for the same services and proposal costs (if necessary). Any challenge to termination under this provision must be filed in the Circuit Court no later than 20 calendar days after the date of termination. If this agreement is terminated for a violation of the statute by the Proposer, the Proposer may not be awarded a public agreement for a period of 1 year after date of termination.

RESERVES THE RIGHT

The City reserves the right to accept or reject any and/or all proposals, to waive irregularities and technicalities, and to request re-submission. If only one proposal is received by the proposal date and time listed, the proposal may or may not be rejected by the City depending upon proposal review and the needs of the City.

The City reserves the right to select a firm with or without additional interviews and may decide to select any of the firms submitting proposals. The City reserves the right to award the contract to a responsible proposer submitting a responsible proposal, with a resulting negotiated agreement which is most advantageous and in the best interest of the City.

Proposers, Proposers, their agents, and associates shall not contact or solicit any City Commission member, City employee, or official regarding this RFP during any phase of the proposalding process. Failure to comply with the provision may result in disqualification of the Proposer, at the option of the City. Only that individual listed, or an approved designee, as the contact person for this RFP shall be contacted.

SUBMITTAL WITHDRAWAL

After submittals are opened, corrections or modifications to submittals are not permitted, but a responding firm may be permitted to withdraw an erroneous submittal prior to the award by the City Commission, if the following is established:

- That the responding firm acted in good faith in submitting the submittal;
- That in preparing the submittal there was an error of such magnitude that enforcement of the submittal would work severe hardship upon the respondent;
- That the error was not the result of gross negligence or willful inattention on the part of the respondent;
- That the error was discovered and communicated to the City within twenty-four (24) hours of submittal opening, along with a request for permission to withdraw the submittal; or
- The responding firm submits documentation and an explanation of how the error was made.

CONE OF SILENCE
Respondents to this solicitation or persons acting on their behalf may not contact, between the release of the solicitation and the end of the 72-hour period following the agency posting the notice of intended award, excluding Saturdays, Sundays, and state holidays, any employee or officer of the executive or legislative branch concerning any aspect of this solicitation, except in writing to the procurement officer or as provided in the solicitation documents. Violation of this provision may be grounds for rejecting a response.

TERMINATION
The resulting contract may be canceled by the City when:

- Sufficient funds are not available to continue its full and faithful performance of this contract.
- There is sub-standard or non-performance of contract.
- The City wishes to terminate at any time and for any reason, upon giving thirty (30) days prior written notice to the other party.

The resulting contract may be canceled by either party in the event of substantial failure to perform in accordance with the terms by the other party through no fault of the terminating party.

FISCAL NON-FUNDING

If funds for the requested services described herein are not appropriated via the annual budget adoption process, the City reserves the right to cancel this Agreement immediately upon written notice to the vendor.

PROJECT RECORDS
The awarded firm shall maintain auditable records concerning the procurement to account for all receipts and expenditures, and to document compliance with the Contract. These records shall be kept in accordance with generally accepted accounting methods, and the City of St. Pete Beach reserves the right to determine the record-keeping method in the event of non-conformity. These records shall be maintained for three (3) years after final payment has been made and shall be readily available to City personnel with reasonable notice, and to other persons in accordance with the Florida Public Disclosure Statutes. Additionally, the awarded firm shall abide by and comply with Florida Statutes regarding public records. Specifically, the firm shall be aware of the provisions found in Section 119.0701, Florida Statutes.

Upon completion of the project, all reports, studies, recommendations, forms, and other project specific information will need to be submitted in paper and in an electronic file format (.PDF, .JPEG) on CD or USB storage device.

V. REFERENCES & MINIMUM QUALIFICATIONS

Provide at least three (3) or more professional, business references with which you have contracted to provide similar services in the past five (5) years. Include the name of the person, its organization, telephone number, fax number, and e-mail address. Include any governmental agencies, with the same contact and descriptive information for which you have provided similar service within the past five (5) years.

Provide a brief description of the history and capabilities of the firm. Describe the types of projects or services the firm performs/has performed and the dollar value of each. Provide information regarding your firm's ability to complete this project. Demonstrate that the firm's personnel have experience with similar projects.

Identify all unresolved and ongoing claims and disputes against your firm in excess of $500,000. Include any claims against the principals of your firm or any claims your company may have against a third party. Provide a history of litigation, including the outcomes, for the past five (5) years.

The responding firm shall provide a statement of assurance that the firm is not presently in violations of any statutes or regulatory rules that might have an impact on the firm's operations. All applicable laws and regulations of the State of Florida and ordinances and regulations of the City of St. Pete Beach will apply.

Provide the overall bonding capacity for the company and provide a history of any claims against the Proposer's previous bonds for the past five (5) years.

The City shall be the sole final judge of qualifications of Proposer to perform service and reserves the exclusive right to accept or reject any proposal as it deems to be in the best interests of the City. The City reserves the right to make such investigation, as it deems necessary, to determine the ability of any proposer to perform the work or service requested. Failure to comply with the requirements of this section may be grounds for rejecting a response.

VI. CONTRACTOR'S PROPOSAL SUBMITTAL

The company that is submitting a proposal declares that it has extensive experience providing Task Work Order driven Civil On-Call Construction Services.

The undersigned, as Proposer, hereby declares that the only person or persons interested in the Proposal as principal or principals are named herein, and that no person other than herein mentioned has any interest in the Proposal or in the Agreement to be entered into; that this Proposal or Agreement is made without connection with any other person, company, or parties making a Proposal; and that it is in all respects fair and in good faith without collusion or fraud.

The Proposer further declares that they have examined the site of the work and informed themselves fully in regard to all conditions pertaining to the place where the work is to be done; that they have examined the Plans and Specifications for the work and Contract Documents relative thereto, and have read all special provisions furnished prior to the opening of proposals; and that they have satisfied themselves relative to the materials to be supplied and work to be performed.

The Proposer proposes and agrees, if the Proposal is accepted, to contract with the City of St. Pete Beach, Florida, in the form of an Agreement specified for **"Civil On Call Construction Services"** in St. Pete Beach, Florida, in full and complete accordance with the shown, noted, described, and reasonably intended requirements of the Plans, Specifications, and Contract Documents, to the full and entire satisfaction of the City of St. Pete Beach, Florida.

The successful Proposer shall be required to utilize the template Agreement in this Request for Proposals (RFP) and any questions regarding the Agreement must be addressed during the RFP process before submittal. The City reserves the right to respond or not respond to questions in the form of an addendum.

The Proposer proposes to furnish all materials, equipment, labor, and perform the work submitted in their proposal schedule for the City of St. Pete Beach **"Civil On Call Construction Services."**

COMPANY: BCS Construction Group DATE: 4.7.2026

ADDRESS: 8130 66th St N Suite 10, Pinellas Park FL 33781 PHONE: 727-543-0033

PROPOSER: Bruno Sequeira NAME: Bruno Sequeira President

(SIGNATURE) (PRINT NAME & TITLE)

STATE OF FLORIDA
COUNTY OF Pinellas

The foregoing instrument was sworn to (or affirmed), subscribed, and acknowledged before me by means of ☒ physical presence or ☐ online notarization, this 7 day of April, 2026, by Bruno C Sequeira, who is personally known to me or has produced FL DL as identification.

(SEAL)

Notary Public State of Florida
Kara L. Antonelli
My Commission HH 682583
Expires 6/2/2029

Notary Public – State of Florida

Kara L Antonelli
(Print, Type, Stamp, or Commissioned Name of Notary Public)

SUBMIT PROPOSAL TO: Electronically via Bonfire only

Notary Public State of Florida
Kara L. Antonelli
My Commission HH 682583
Expires 6/2/2029

VII. PUBLIC ENTITY CRIMINAL AFFIDAVIT

SWORN STATEMENT – PUBLIC ENTITY CRIMES

PURSUANT TO § 287.133 (3)(a), FLORIDA STATUTES, ON PUBLIC ENTITY CRIMES
THE FORM MUST BE SIGNED AND SWORN TO IN THE PRESENCE OF A NOTARY PUBLIC OR OTHER OFFICIAL AUTHORIZED TO ADMINISTER OATHS.

1. This sworn statement is submitted to: City of St. Pete Beach
by: Bruno C Sequeira, President
(Print individual's name and title)

for: BCS Construction Group LLC
(Print name of entity submitting sworn statement)

at: 8130 160th St N, Suite 10 Pinellas Park FL 33781
(Business address)

and (if applicable), its Federal Employer Identification Number (FEIN):
84 - 3448810
(FEIN)
or, if the entity has no FEIN, include the Social Security Number:

(SSN)

by the individual signing this sworn statement:
(Signature)

2. I understand that a "public entity crime" as defined in § 287.133 (1)(g), Fla. Stat., means a violation of any State or Federal law by a person with respect to and directly related to the transaction of business with any public entity or with an agency or political subdivision of any other state or of the United States including, but not limited to, any proposal or contract for goods or services, any lease for real property, or any contract for the construction or repair of a public building or public work, involving antitrust, fraud, theft, bribery, collusion, racketeering, conspiracy, or material misrepresentation.

3. I understand that "convicted" or "conviction" as defined in § 287.133 (1)(b), Fla. Stat., means a finding of guilt or a conviction of public entity crime with or without an adjudication of guilt in any Federal or State trial court of record relating to charges brought by indictment or information after July 1, 1989, as a result of a jury verdict, non-jury trial, or entry of a plea of guilty or nolo contendere.

4. I understand that an "affiliate" as defined in § 287.133 (1)(a), Fla. Stat., means:
   a. A predecessor or successor of a person convicted of a public entity crime or
   b. An entity under the control of any natural person who is active in the management of the entity and who has been convicted of a public entity crime. The term "affiliate" includes those officers, directors, executives, partners, shareholders, employees, members, and agents who are active in the management of an affiliate. The ownership by one (1) person of shares constituting a controlling interest in another person or a pooling of equipment or income among persons when not for fair market value under the arm's length agreement, shall be a prima facie case that one (1) person controls another person. A person who knowingly enters into a joint venture with a person who has been convicted of a public crime in Florida during the preceding thirty-six (36) months shall be considered an affiliate.

5. I understand that a "person" as defined in Section 287.133 (1)(e), Fla. Stat., means any natural person or any entity organized under the laws of any state or of the United States with the legal power to enter into a binding contract and which proposals or applies to proposal on contracts let by a public entity, or which otherwise transacts or applies to transact business with a public entity. The term "person" includes those officers, directors, executives, partners, shareholders, employees, members, and agents who are active in management of an entity.

6. Based on information and belief, the **statement which I have marked below is true** in relation to the entity submitting this sworn statement (indicate which statement applies).

☑ Neither the entity submitting this sworn statement, nor any of its officers, directors, executives, partners, shareholders, employees, members, or agents who are active in the management of the entity nor any affiliate of the entity has been charged with and convicted of a public entity crime subsequent to July 1, 1989.

☐ The entity submitting this sworn statement or one (1) or more of its officers, directors, executives, partners, shareholders, employees, members, or agents who are active in the management of the entity or an affiliate of the entity has been charged with and convicted of a public entity crime subsequent to July 1, 1989.

☐ The entity submitting this sworn statement or one (1) or more of its officers, directors, executives, partners, shareholders, employees, members, or agents who are active in the management of the entity or an affiliate of the entity has been charged with and convicted of a public entity crime subsequent to July 1, 1989. However, there has been a subsequent proceeding before a Hearing Office of the State of Florida, Division of Administrative Hearings and the Final Order entered by the Hearing Officer determined that it was not in the public interest to place the entity submitting this sworn statement on the convicted vendor list (attach a copy of the final order).

I UNDERSTAND THAT THE SUBMISSION OF THIS FORM TO THE CONTRACTING OFFICE FOR THE PUBLIC ENTITY IDENTIFIED IN PARAGRAPH 1 ABOVE IS FOR THE PUBLIC ENTITY ONLY AND THAT THIS FORM IS VALID THROUGH DECEMBER 31 OF THE CALENDAR YEAR IN WHICH IT IS FILED. I ALSO UNDERSTAND THAT I AM REQUIRED TO INFORM THE PUBLIC ENTITY PRIOR TO ENTERING INTO A CONTRACT IN EXCESS OF THE THRESHOLD AMOUNT PROVIDED IN SECTION 287.017, FLORIDA STATUTES, FOR CATEGORY TWO OF ANY CHANGE IN THE INFORMATION CONTAINED IN THIS FORM.

STATE OF FLORIDA
COUNTY OF Pinellas

The foregoing instrument was sworn to (or affirmed), subscribed, and acknowledged before me by means of ☒ physical presence or ☐ online notarization, this 7 day of April, 2026, by Bruno C Sequeira who is personally known to me or has produced FL DL as identification.

(SEAL)

Notary Public – State of Florida

Kara L Antonelli

(Print, Type, Stamp, or Commissioned Name of Notary Public)

Notary Public State of Florida
Kara L. Antonelli
My Commission HH 682583
Expires 6/2/2029

VIII. NON-COLLUSION AFFADAVIT

STATE OF Florida COUNTY OF Pinellas

I state that I Bruno C Sequeira of BCS Construction Group LLC
(Name and Title) President (Name of Firm)

I am authorized to make this affidavit on behalf of my firm and its owner, directors and officers. I am the person responsible in my firm for the price(s) and amount(s) of this Response, and the preparation of the Response. I state that:

1. The price(s) and amount(s) of this Response have been arrived at independently and without consultation, communication or agreement with any other Provider, potential provider, Proposal, or potential Proposal.

2. Neither the price(s) nor the amount(s) of this Response, and neither the approximate price(s) nor approximate amount(s) of this Response, have been disclosed to any other firm or person who is a Provider, potential Provider, Proposal, or potential Proposal, and they will not be disclosed before Proposal opening.

3. No attempt has been made or will be made to induce any firm or persons to refrain from submitting a Response for this contract, or to submit a price(s) higher that the prices in this Response, or to submit any intentionally high or noncompetitive price(s) or other form of complementary Response.

4. The Response of my firm is made in good faith and not pursuant to any agreement or discussion with, or inducement from, any firm or person to submit a complementary or other noncompetitive Response.

5. _____, its affiliates, subsidiaries, officers, director, and employees (Name of Firm) are not currently under investigation, by any governmental agency and have not in the last three years been convicted or found liable for any act prohibited by State or Federal law in any jurisdiction, involving conspiracy or collusion with respect to Proposal, on any public contract, except as follows:

I state that I and the named firm understand and acknowledge that the above representations are material and important, and will be relied on by the State of Florida for which this Response is submitted. I understand and my firm understands that any misstatement in this affidavit is, and shall be treated as, fraudulent concealment from the State of Florida of the true facts relating to the submission of responses for this contract.

Name of Organization: BCS Construction Group Signed By: Bruno C Sequeira

Print Name: Bruno C Sequeira

The foregoing instrument was sworn to (or affirmed), subscribed, and acknowledged before me by means of ☒ physical presence or ☐ online notarization, this 7th day of April, 2026, by Bruno C Sequeira, who is personally known to me or has produced FL DL as identification.

(SEAL)

Notary Public State of Florida
Kara L. Antonelli
My Commission HH 682583
Expires 6/2/2029

Kara L Antonelli
Notary Public – State of Florida

Kara L Antonelli
(Print, Type, Stamp, or Commissioned Name of Notary Public)

Bid Form for City of St Pete Beach
On-Call Civil Construction Services
Request for Proposal

Specifications for the numbered pay items can be found in the current FDOT "Standard Specifications for Road and Bridge Construction".
Bid quantities are for comparison purposes only. This contract consists of various projects which are not yet defined and no quantities are guaranteed.

Pay Item No.	Item Description	Units	Est. Quantity	Unit Price	Amount
0101 1 (2501-5000)	MOBILIZATION (PER WORK ASSIGNMENT/LOCATION) - $2,501 TO $5,000	LS	1	$5000.00	$5000.00
0101 1 (5501-25000)	MOBILIZATION (PER WORK ASSIGNMENT/LOCATION) - $5,001 TO $25,000	LS	1	$5000.00	$5000.00
0101 1 (25001-50000)	MOBILIZATION (PER WORK ASSIGNMENT/LOCATION) - $25,001 TO $50,000	LS	1	$5000.00	$5000.00
0101 1 (50001-150000)	MOBILIZATION (PER WORK ASSIGNMENT/LOCATION) - $50,001 TO $150,000	LS	1	$5000.00	$5000.00
0101 1 (150001-250000)	MOBILIZATION (PER WORK ASSIGNMENT/LOCATION) - $150,001 TO $250,000	LS	1	$5000.00	$5000.00
0101 1 (250001-350000)	MOBILIZATION (PER WORK ASSIGNMENT/LOCATION) - $250,001 TO $350,000	LS	1	$5000.00	$5000.00
0101 1 (350001-500000)	MOBILIZATION (PER WORK ASSIGNMENT/LOCATION) - $350,001 to $500,000	LS	1	$5000.00	$5000.00
0101 1 (500001+)	MOBILIZATION (PER WORK ASSIGNMENT/LOCATION) - $500,001 or more	LS	1	$5000.00	$5000.00
0101 1 (2501-5000)	EMERGENCY MOBILIZATION (PER WORK ASSIGNMENT/LOCATION) - $2,501 TO $5,000	LS	1	$5000.00	$5000.00
0101 1 (5501-25000)	EMERGENCY MOBILIZATION (PER WORK ASSIGNMENT/LOCATION) - $5,001 TO $25,000	LS	1	$5000.00	$5000.00
0101 1 (25001-50000)	EMERGENCY MOBILIZATION (PER WORK ASSIGNMENT/LOCATION) - $25,001 TO $50,000	LS	1	$5000.00	$5000.00
0101 1 (50001-150000)	EMERGENCY MOBILIZATION (PER WORK ASSIGNMENT/LOCATION) - $50,001 TO $150,000	LS	1	$5000.00	$5000.00
0101 1 (150001-250000)	EMERGENCY MOBILIZATION (PER WORK ASSIGNMENT/LOCATION) - $150,001 TO $250,000	LS	1	$5000.00	$5000.00
0102 1	MAINTENANCE OF TRAFFIC	Lump Sum (LS) cost to be assigned for each Task Order and shall not exceed 10% of the proposed construction cost.			
0102 3	COMMERCIAL MATERIAL FOR TEMPORARY DRIVEWAY MAINTENANCE	CY	50	$85.21	$4260.50
0102 14	TRAFFIC CONTROL OFFICER	HR	500	$100.70	$50350.00
0102 60	WORK ZONE SIGN	ED	6000	$0.25	$1500.00
0102 61	BUSINESS SIGN	EA	5	$6,992.00	$34960.00
0102 71 11	BARRIER WALL, TEMPORARY, F&I, CONCRETE	LF	200	$22.14	$4428.00
0102 71 13	BARRIER WALL, TEMPORARY, F&I, LOW PROFILE, CONCRETE	LF	200	$22.14	$4428.00
0102 71 14	BARRIER WALL, TEMPORARY, F&I, TYPE K	LF	200	$22.14	$4428.00
0102 71 21	BARRIER WALL, TEMPORARY, RELOCATE, CONCRETE	LF	200	$22.14	$4428.00
0102 71 23	BARRIER WALL, TEMPORARY, RELOCATE, LOW PROFILE, CONCRETE	LF	200	$22.14	$4428.00
0102 71 24	BARRIER WALL, TEMPORARY, RELOCATE, TYPE K	LF	200	$22.14	$4428.00

0102 73	TEMPORARY GUARDRAIL	LF	20	$22.14	$442.80
0102 74 1	CHANNELIZING DEVICE- TYPES I, II, DI, VP, DRUM, OR LCD	ED	15000		$0.00
0102 74 2	CHANNELIZING DEVICE, TYPE III, 6'	ED	1000		$0.00
0102 74 7	CHANNELIZING DEVICE- PEDESTRIAN LCD (LONGITUDINAL CHANNELIZING DEVICE)	LF	1000	$22.14	$22140.00
0102 75 1	TEMPORARY SEPARATOR, F&I REMOVE	LF	500	$22.14	$11070.00
0102 75 2	TEMPORARY SEPARATOR, F&I REMAIN	LF	500	$22.14	$11070.00
0102 75 3	TEMPORARY SEPARATOR, INSTALL	LF	500	$22.14	$11070.00
0102 75 4	TEMPORARY SEPARATOR, RELOCATE	LF	500	$22.14	$11070.00
0102 75 5	TEMPORARY SEPARATOR, REMOVE	LF	500	$22.14	$11070.00
0102 76	ARROW BOARD / ADVANCE WARNING ARROW PANEL	ED	250		$0.00
0102 78	TEMPORARY RETROREFLECTIVE PAVEMENT MARKER	EA	50	$6992.00	$349600.00
0102 89 1	TEMPORARY CRASH CUSHION, REDIRECTIVE OPTION	LO	5		$0.00
0102 99	PORTABLE CHANGEABLE MESSAGE SIGN, TEMPORARY	ED	600	$550.00	$330000.00
0102 104	TEMPORARY SIGNALIZATION AND MAINTENANCE, INTERSECTION	ED	100	$1273.48	$127348.00
0102 107 1	TEMPORARY TRAFFIC DETECTION AND MAINTENANCE, INTERSECTION	ED	100	$1273.48	$127348.00
0102 150 1	PORTABLE REGULATORY SIGN	ED	50	$1273.48	$63674.00
0102 150 2	RADAR SPEED DISPLAY UNIT	ED	50	$1,273.48	$63674.00
0102 911 1	PAVEMENT MARKING REMOVABLE TAPE, WHITE OR BLACK, SKIP	LF	500	$22.14	$11070.00
0102 911 2	PAVEMENT MARKING REMOVABLE TAPE, WHITE, BLACK, SOLID	LF	500	$22.14	$11070.00
0102 911 3	PAVEMENT MARKING REMOVABLE TAPE, WHITE OR BLACK, OTHER	SF	25	$6.55	$163.75
0102 912 1	PAVT MARKING REMOVABLE TAPE, YELLOW, SKIP	LF	500	$22.14	$11070.00
0102 912 2	PAVEMENT MARKING REMOVABLE TAPE, YELLOW, SOLID	LF	500	$22.14	$11070.00
0102 912 3	PAVEMENT MARKING REMOVABLE TAPE, YELLOW, OTHER	SF	25	$6.55	$163.75
0104 1	ARTIFICIAL COVERINGS /ROLLED EROSION CONTROL PRODUCTS	SY	150	$7.91	$1186.50
0104 10 3	SEDIMENT BARRIER	LF	5000	$7.29	$36450.00
0104 11	FLOATING TURBIDITY BARRIER	LF	100	$13.65	$1365.00
0104 12	STAKED TURBIDITY BARRIER- NYLON REINFORCED PVC	LF	100	$7.48	$748.00
0104 13 1	STAKED SILT FENCE, TYPE III	LF	500	$22.14	$11070.00

0104 13 2	STAKED SILT FENCE, TYPE IV	LF	500	$22.14	$11070.00
0104 18	INLET PROTECTION SYSTEM	EA	100	$6,992.00	$699200.00
0107 1	LITTER REMOVAL	AC	10	$53,568.00	$535680.00
0107 2	MOWING	AC	10	$600.00	$6000.00
0110 2 1	CLEARING & GRUBBING	AC	10	$15,000.00	$150000.00
0110 3	REMOVAL OF EXISTING STRUCTURES/BRIDGES	SF	20	$15.00	$300.00
0110 4 10	REMOVAL OF EXISTING CONCRETE	SY	2000	$7.91	$15820.00
0110 7 1	MAILBOX, F&I SINGLE	EA	5	$6,992.00	$34960.00
0120 1	REGULAR EXCAVATION	CY	3000	$10.00	$30000.00
0120 3	LATERAL DITCH EXCAVATION	CY	100	$9.38	$938.00
0120 4	SUBSOIL EXCAVATION	CY	100	$9.38	$938.00
0120 5	CHANNEL EXCAVATION	CY	100	$9.38	$938.00
0120 6	EMBANKMENT	CY	500	$4.82	$2410.00
0121 70	FLOWABLE FILL	CY	50	$9.38	$469.00
0125 1	EXCAVATION FOR STRUCTURES	CY	25	$9.38	$234.50
0145 1	GEOSYNTHETIC REINFORCED SOIL SLOPE	SF	25	$6.55	$163.75
0160 4	TYPE B STABILIZATION	SY	7000	$7.91	$55370.00
0162 1 11	PREPARED SOIL LAYER-6" DEPTH	SY	50	$7.91	$395.50
0162 1 12	PREPARED SOIL LAYER, FINISH SOIL LAYER, 12"	SY	50	$7.91	$395.50
0162 1 21	PREPARED SOIL LAYER, ORGANIC SOIL LAYER, 6"	SY	50	$7.91	$395.50
285701	OPTIONAL BASE, BASE GROUP 01	SY	100	$7.91	$791.00
285702	OPTIONAL BASE, BASE GROUP 02	SY	100	$7.91	$791.00
285703	OPTIONAL BASE, BASE GROUP 03	SY	100	$7.91	$791.00
285704	OPTIONAL BASE, BASE GROUP 04	SY	1000	$7.91	$7910.00
285705	OPTIONAL BASE, BASE GROUP 05	SY	100	$7.91	$791.00
285706	OPTIONAL BASE, BASE GROUP 06	SY	1000	$7.91	$7910.00
285707	OPTIONAL BASE, BASE GROUP 07	SY	100	$7.91	$791.00
285708	OPTIONAL BASE, BASE GROUP 08	SY	1000	$7.91	$7910.00

285709	OPTIONAL BASE, BASE GROUP 09	SY	100	$7.91	$791.00
285710	OPTIONAL BASE GROUP 10	SY	100	$7.91	$791.00
285711	OPTIONAL BASE, BASE GROUP 11	SY	100	$7.91	$791.00
285712	OPTIONAL BASE, BASE GROUP 12	SY	100	$7.91	$791.00
285713	OPTIONAL BASE, BASE GROUP 13	SY	100	$7.91	$791.00
285714	OPTIONAL BASE, BASE GROUP 14	SY	100	$7.91	$791.00
285715	OPTIONAL BASE, BASE GROUP 15	SY	100	$7.91	$791.00
0327 70 1	MILLING EXIST ASPH PAVT, 1" AVG DEPTH	SY	1000	$3.74	$3740.00
0327 70 2	MILLING EXIST ASPH PAVT, 3 1/2" AVG DEPTH	SY	200	$7.91	$1582.00
0327 70 3	MILLING EXIST ASPH PAVT, 4 1/2" AVG DEPTH	SY	200	$7.91	$1582.00
0327 70 4	MILLING EXIST ASPH PAVT, 3" AVG DEPTH	SY	200	$7.91	$1582.00
0327 70 5	MILLING EXIST ASPH PAVT, 2" AVG DEPTH	SY	200	$7.91	$1582.00
0327 70 6	MILLING EXIST ASPH PAVT, 1 1/2" AVG DEPTH	SY	5000	$7.91	$39550.00
0327 70 7	MILLING EXIST ASPH PAVT, 4" AVG DEPTH	SY	200	$7.91	$1582.00
0327 70 8	MILLING EXIST ASPH PAVT, 2 1/2" AVG DEPTH	SY	200	$7.91	$1582.00
0327 70 11	MILLING EXIST ASPH PAVT, 2 1/4" AVG DEPTH	SY	200	$3.74	$748.00
0327 70 12	MILLING EXIST ASPH PAVT, 1 1/4" AVG DEPTH	SY	200	$3.74	$748.00
0327 70 13	MILLING EXIST ASPH PAVT, 1 3/4" AVG DEPTH	SY	200	$3.74	$748.00
0327 70 15	MILLING EXIST ASPH PAVT, 2 3/4" AVG DEPTH	SY	200	$3.74	$748.00
0327 70 16	MILLING EXIST ASPH PAVT, 1/2" AVG DEPTH	SY	200	$3.74	$748.00
0327 70 17	MILLING EXIST ASPH PAVT, 3 1/4" AVG DEPTH	SY	200	$3.74	$748.00
0327 70 19	MILLING EXIST ASPH PAVT, 3/4" AVG DEPTH	SY	200	$3.74	$748.00
0327 70 20	MILLING EXIST ASPH PAVT, 3 3/4" AVG DEPTH	SY	200	$7.91	$1582.00
0334 1 12 (1-99)	SUPERPAVE ASPHALTIC CONC, TRAFFIC B, 1-99 TONS	TN	50	$115.81	$5790.50
0334 1 12 (100-199)	SUPERPAVE ASPHALTIC CONC, TRAFFIC B, 100 - 199 TONS	TN	150	$115.81	$17371.50
0334 1 12 (200-300)	SUPERPAVE ASPHALTIC CONC, TRAFFIC B, 200 - 300 TONS	TN	250	$115.81	$28952.50
0334 1 12 (300+)	SUPERPAVE ASPHALTIC CONC, TRAFFIC B, 300 TONS OR MORE	TN	350	$115.81	$40533.50
0334 1 13 (1-99)	SUPERPAVE ASPHALTIC CONC, TRAFFIC C 1 - 99 TONS	TN	50	$147.07	$7353.50

0334 1 13 (100-199)	SUPERPAVE ASPHALTIC CONC, TRAFFIC C 100 - 199 TONS	TN	150	$147.07	$22060.50
0334 1 13 (200-300)	SUPERPAVE ASPHALTIC CONC, TRAFFIC C 200 -300 TONS	TN	250	$147.07	$36767.50
0334 1 13 (300+)	SUPERPAVE ASPHALTIC CONC, TRAFFIC C 300 TONS OR MORE	TN	350	$147.07	$51474.50
0334 1 52 (0-99)	SUPERPAVE ASPHALTIC CONCRETE, TRAFFIC B, PG76-22 0-99 TONS	TN	50	$115.81	$5790.50
0334 1 52 (100-199)	SUPERPAVE ASPHALTIC CONCRETE, TRAFFIC B, PG76-22 100-199 TONS	TN	150	$115.81	$17371.50
0334 1 52 (200-300)	SUPERPAVE ASPHALTIC CONCRETE, TRAFFIC B, PG76-22 200-300 TONS	TN	250	$115.81	$28952.50
0334 1 52 (300+)	SUPERPAVE ASPHALTIC CONCRETE, TRAFFIC B, PG76-22 300 TONS OR MORE	TN	350	$115.81	$40533.50
0334 1 53 (0-99)	SUPERPAVE ASPHALTIC CONCRETE, TRAFFIC C, PG76-22 0-99 TONS	TN	50	$115.81	$5790.50
0334 1 53 (100-199)	SUPERPAVE ASPHALTIC CONCRETE, TRAFFIC C, PG76-22 100-199 TONS	TN	150	$115.81	$17371.50
0334 1 53 (200-300)	SUPERPAVE ASPHALTIC CONCRETE, TRAFFIC C, PG76-22 200-300 TONS	TN	250	$115.81	$28952.50
0334 1 53 (300+)	SUPERPAVE ASPHALTIC CONCRETE, TRAFFIC C, PG76-22 300 TONS OR MORE	TN	350	$115.81	$40533.50
0334 1 54 (0-99)	SUPERPAVE ASPHALTIC CONCRETE, TRAFFIC D, PG76-22 0-99 TONS	TN	50	$115.81	$5790.50
0334 1 54 (100-199)	SUPERPAVE ASPHALTIC CONCRETE, TRAFFIC D, PG76-22 100-199 TONS	TN	150	$115.81	$17371.50
0334 1 54 (200-300)	SUPERPAVE ASPHALTIC CONCRETE, TRAFFIC D, PG76-22 200-300 TONS	TN	250	$115.81	$28952.50
0334 1 54 (300+)	SUPERPAVE ASPHALTIC CONCRETE, TRAFFIC D, PG76-22 300 TONS OR MORE	TN	350	$115.81	$40533.50
0334 1 56 (1-99)	SUPERPAVE ASPHALTIC CONCRETE, TRAFFIC B, HIGH POLYMER 0-99 TONS	TN	50	$115.81	$5790.50
0334 1 56 (100-199)	SUPERPAVE ASPHALTIC CONCRETE, TRAFFIC B, HIGH POLYMER 100-199 TONS	TN	150	$115.81	$17371.50
0334 1 56 (200-300)	SUPERPAVE ASPHALTIC CONCRETE, TRAFFIC B, HIGH POLYMER 200-300 TONS	TN	250	$115.81	$28952.50
0334 1 56 (300+)	SUPERPAVE ASPHALTIC CONCRETE, TRAFFIC B, HIGH POLYMER 300 TONS OR MORE	TN	350	$115.81	$40533.50
0334 1 57 (0-99)	SUPERPAVE ASPHALTIC CONCRETE, TRAFFIC C, HIGH POLYMER 0-99 TONS	TN	50	$115.81	$5790.50
0334 1 57 (100-199)	SUPERPAVE ASPHALTIC CONCRETE, TRAFFIC C, HIGH POLYMER 100-199 TONS	TN	150	$115.81	$17371.50
0334 1 57 (200-300)	SUPERPAVE ASPHALTIC CONCRETE, TRAFFIC C, HIGH POLYMER 200-300 TONS	TN	250	$115.81	$28952.50
0334 1 57 (300+)	SUPERPAVE ASPHALTIC CONCRETE, TRAFFIC C, HIGH POLYMER 300 TONS OR MORE	TN	350	$115.81	$40533.50
0334 1 58 (0-99)	SUPERPAVE ASPHALTIC CONCRETE, TRAFFIC D, HIGH POLYMER 0-99 TONS	TN	50	$115.81	$5790.50
0334 1 58 (100-199)	SUPERPAVE ASPHALTIC CONCRETE, TRAFFIC D, HIGH POLYMER 100-199 TONS	TN	150	$115.81	$17371.50
0334 1 58 (200-300)	SUPERPAVE ASPHALTIC CONCRETE, TRAFFIC D, HIGH POLYMER 200-300 TONS	TN	250	$115.81	$28952.50
0334 1 58 (300+)	SUPERPAVE ASPHALTIC CONCRETE, TRAFFIC D, HIGH POLYMER 300 TONS OR MORE	TN	350	$115.81	$40533.50
0337 7 80 (0-99)	ASPHALT CONCRETE FRICTION COURSE,TRAFFIC B, FC-9.5, PG 76-22 0-99 TONS	TN	50	$115.81	$5790.50

0337 7 80 (100-199)	ASPHALT CONCRETE FRICTION COURSE,TRAFFIC B, FC-9.5, PG 76-22 100-199 TONS	TN	150	$115.81	$17371.50
0337 7 80 (200-300)	ASPHALT CONCRETE FRICTION COURSE,TRAFFIC B, FC-9.5, PG 76-22 200-300 TONS	TN	250	$115.81	$28952.50
0337 7 80 (300+)	ASPHALT CONCRETE FRICTION COURSE,TRAFFIC B, FC-9.5, PG 76-22 300 TONS OR MORE	TN	350	$115.81	$40533.50
0337 7 81 (0-99)	ASPHALT CONCRETE FRICTION COURSE,TRAFFIC B, FC-12.5, PG 76-22 0-99 TONS	TN	50	$115.81	$5790.50
0337 7 81 (100-199)	ASPHALT CONCRETE FRICTION COURSE,TRAFFIC B, FC-12.5, PG 76-22 100-199 TONS	TN	150	$115.81	$17371.50
0337 7 81 (200-300)	ASPHALT CONCRETE FRICTION COURSE,TRAFFIC B, FC-12.5, PG 76-22 200-300 TONS	TN	250	$115.81	$28952.50
0337 7 81 (300+)	ASPHALT CONCRETE FRICTION COURSE,TRAFFIC B, FC-12.5, PG 76-22 300 TONS OR MORE	TN	350	$115.81	$40533.50
0337 7 82 (0-99)	ASPHALT CONCRETE FRICTION COURSE,TRAFFIC C, FC-9.5, PG 76-22 0-99 TONS	TN	50	$115.81	$5790.50
0337 7 82 (100-199)	ASPHALT CONCRETE FRICTION COURSE,TRAFFIC C, FC-9.5, PG 76-22 100-199 TONS	TN	150	$115.81	$17371.50
0337 7 82 (200-300)	ASPHALT CONCRETE FRICTION COURSE,TRAFFIC C, FC-9.5, PG 76-22 200-300 TONS	TN	250	$115.81	$28952.50
0337 7 82 (300+)	ASPHALT CONCRETE FRICTION COURSE,TRAFFIC C, FC-9.5, PG 76-22 300 TONS OR MORE	TN	350	$115.81	$40533.50
0337 7 83 (0-99)	ASPHALT CONCRETE FRICTION COURSE,TRAFFIC C, FC-12.5, PG 76-22 0-99 TONS	TN	50	$115.81	$5790.50
0337 7 83 (100-199)	ASPHALT CONCRETE FRICTION COURSE,TRAFFIC C, FC-12.5, PG 76-22 100-199 TONS	TN	150	$115.81	$17371.50
0337 7 83 (200-300)	ASPHALT CONCRETE FRICTION COURSE,TRAFFIC C, FC-12.5, PG 76-22 200-300 TONS	TN	250	$115.81	$28952.50
0337 7 83 (300+)	ASPHALT CONCRETE FRICTION COURSE,TRAFFIC C, FC-12.5, PG 76-22 300 TONS OR MORE	TN	350	$115.81	$40533.50
0337 7 85 (0-99)	ASPHALT CONCRETE FRICTION COURSE,TRAFFIC D, FC-12.5, PG 76-22 0-99 TONS	TN	50	$115.81	$5790.50
0337 7 85 (100-199)	ASPHALT CONCRETE FRICTION COURSE,TRAFFIC D, FC-12.5, PG 76-22 100-199 TONS	TN	150	$115.81	$17371.50
0337 7 85 (200-300)	ASPHALT CONCRETE FRICTION COURSE,TRAFFIC D, FC-12.5, PG 76-22 200-300 TONS	TN	250	$115.81	$28952.50
0337 7 85 (300+)	ASPHALT CONCRETE FRICTION COURSE,TRAFFIC D, FC-12.5, PG 76-22 300 TONS OR MORE	TN	350	$115.81	$40533.50
0337 7 90 (0-99)	ASPHALT CONCRETE FRICTION COURSE,TRAFFIC B, FC-9.5, HIGH POLYMER 0-99 TONS	TN	50	$115.81	$5790.50
0337 7 90 (100-199)	ASPHALT CONCRETE FRICTION COURSE,TRAFFIC B, FC-9.5, HIGH POLYMER 100-199 TONS	TN	150	$115.81	$17371.50
0337 7 90 (200-300)	ASPHALT CONCRETE FRICTION COURSE,TRAFFIC B, FC-9.5, HIGH POLYMER 200-300 TONS	TN	250	$115.81	$28952.50
0337 7 90 (300+)	ASPHALT CONCRETE FRICTION COURSE,TRAFFIC B, FC-9.5, HIGH POLYMER 300 TONS OR MORE	TN	350	$115.81	$40533.50
0337 7 93 (0-99)	ASPHALT CONCRETE FRICTION COURSE,TRAFFIC C, FC-12.5, HIGH POLYMER 0-99 TONS	TN	50	$115.81	$5790.50
0337 7 93 (100-199)	ASPHALT CONCRETE FRICTION COURSE,TRAFFIC C, FC-12.5, HIGH POLYMER 100-199 TONS	TN	150	$115.81	$17371.50
0337 7 93 (200-300)	ASPHALT CONCRETE FRICTION COURSE,TRAFFIC C, FC-12.5, HIGH POLYMER 200-300 TONS	TN	250	$115.81	$28952.50
0337 7 93 (300+)	ASPHALT CONCRETE FRICTION COURSE,TRAFFIC C, FC-12.5, HIGH POLYMER 300 TONS OR MORE	TN	350	$115.81	$40533.50
0337 7 94 (0-99)	ASPHALT CONCRETE FRICTION COURSE,TRAFFIC D, FC-12.5, HIGH POLYMER 0-99 TONS	TN	50	$115.81	$5790.50

0337 7 94 (100-199)	ASPHALT CONCRETE FRICTION COURSE,TRAFFIC D, FC-12.5, HIGH POLYMER 100-199 TONS	TN	150	$115.81	$17371.50
0337 7 94 (200-300)	ASPHALT CONCRETE FRICTION COURSE,TRAFFIC D, FC-12.5, HIGH POLYMER 200-300 TONS	TN	250	$115.81	$28952.50
0337 7 94 (300+)	ASPHALT CONCRETE FRICTION COURSE,TRAFFIC D, FC-12.5, HIGH POLYMER 300 TONS OR MORE	TN	350	$115.81	$40533.50
0339 1	MISCELLANEOUS ASPHALT PAVEMENT	TN	25	$115.81	$2895.25
0350 3 5	PLAIN CEMENT CONCRETE PAVEMENT, 8"	SY	100	$7.91	$791.00
0350 3 9	PLAIN CEMENT CONCRETE PAVEMENT, 10"	SY	100	$7.91	$791.00
0350 3 13	PLAIN CEMENT CONCRETE PAVEMENT, 12"	SY	100	$7.91	$791.00
0350 5	CLEANING & SEALING JOINTS- CONCRETE PAVEMENT:	LF	100	$22.14	$2214.00
0350 30 13	CONCRETE PAVEMENT FOR ROUNDABOUT APRON, 12" DEPTH	SY	100	$7.91	$791.00
0352 70	GRINDING CONCRETE PAVEMENT	SY	100	$7.91	$791.00
0400 0 11	CONCRETE CLASS NS, GRAVITY WALL	CY	10	$9.38	$93.80
0400 1 2	CONCRETE CLASS I, ENDWALLS	CY	10	$9.38	$93.80
0400 1 11	CONCRETE CLASS I, RETAINING WALLS	CY	10	$9.38	$93.80
0400 2 1	CONCRETE CLASS II, CULVERTS	CY	10	$9.38	$93.80
0400 2 2	CONCRETE CLASS II, ENDWALLS	CY	10	$9.38	$93.80
0400 2 5	CONCRETE CLASS II, BRIDGE SUBSTRUCTURE	CY	10	$9.38	$93.80
0400 2 11	CONCRETE CLASS II, RETAINING WALLS	CY	10	$9.38	$93.80
0400 3 1	CONCRETE CLASS III, CULVERTS	CY	10	$9.38	$93.80
0400 3 8	CONCRETE CLASS III, BULKHEAD	CY	10	$9.38	$93.80
0400 4 1	CONCRETE CLASS IV, CULVERTS	CY	10	$9.38	$93.80
0400 4 2	CONCRETE CLASS IV, ENDWALLS	CY	10	$9.38	$93.80
0400 4 5	CONCRETE CLASS IV, BRIDGE SUBSTRUCTURE	CY	10	$9.38	$93.80
0400 4 11	CONC CLASS IV, RETAINING WALLS	CY	10	$9.38	$93.80
0400 145	CLEANING CONCRETE SURFACE	SF	20	$6.55	$131.00
0401 70 1	RESTORE SPALLED AREAS, EPOXY	CF	10	$45.00	$450.00
0401 70 4	RESTORE SPALLED AREAS, PORTLAND CEMENT GROUT	CF	10	$25.00	$250.00
0401 70 5	RESTORE SPALLED AREAS, CONTRACTORS OPTION	CF	10	$55.00	$550.00
0411 1	EPOXY MATERIAL FOR CRACK INJECTION- STRUCTURES REHAB	GA	10		$0.00

0411 2	CRACKS INJECT & SEAL- STRUCTURES REHAB	LF	25	$22.14	$553.50
413-149	PENETRANT SEALER	GA	10		$0.00
413-154	CLEANING & SEALING CONCRETE SURFACES- PENETRANT SEALER OR METHACRYLATES	SF	25	$6.55	$163.75
0415 1 1	REINFORCING STEEL- ROADWAY	LB	100	$1.32	$132.00
0415 1 3	REINFORCING STEEL- RETAINING WALL	LB	100	$5.50	$550.00
0415 1 5	REINFORCING STEEL- BRIDGE SUBSTRUCTURE	LB	100	$5.50	$550.00
0415 1 6	REINFORCING STEEL- MISCELLANEOUS	LB	100	$5.50	$550.00
0415 1 8	REINFORCING STEEL- BULKHEAD	LB	100	$5.50	$550.00
0425 1201	INLETS, CURB, TYPE 9, <10'	EA	3	$6,992.00	$20976.00
0425 1202	INLETS, CURB, TYPE 9, >10'	EA	3	$6,992.00	$20976.00
0425 1203	INLETS, CURB, TYPE 9, J BOT, <10'	EA	3	$6,992.00	$20976.00
0425 1204	INLETS, CURB, TYPE 9, J BOT, >10'	EA	3	$6,992.00	$20976.00
0425 1205	INLETS, CURB, TYPE 9, PARTIAL	EA	3	$6,992.00	$20976.00
0425 1209	INLETS, CURB, TYPE 9, MODIFY	EA	3	$6,992.00	$20976.00
0425 1211	INLETS, CURB, TYPE 10, <10'	EA	3	$6,992.00	$20976.00
0425 1212	INLETS, CURB, TYPE 10, >10'	EA	3	$6,992.00	$20976.00
0425 1213	INLETS, CURB, TYPE 10, J BOT <10'	EA	3	$6,992.00	$20976.00
0425 1214	INLETS, CURB, TYPE 10, J BOT >10'	EA	3	$6,992.00	$20976.00
0425 1215	INLETS, CURB, TYPE 10, PARTIAL	EA	3	$6,992.00	$20976.00
0425 1311	INLETS, CURB, TYPE P-1, <10'	EA	3	$6,992.00	$20976.00
0425 1312	INLETS, CURB TYPE P-1, >10'	EA	3	$6,992.00	$20976.00
0425 1315	INLETS, CURB TYPE P-1, PARTIAL	EA	3	$6,992.00	$20976.00
0425 1319	INLETS, CURB TYPE P-1, MODIFY	EA	3	$6,992.00	$20976.00
0425 1321	INLETS, CURB, TYPE P-2, <10'	EA	3	$6,992.00	$20976.00
0425 1322	INLETS, CURB, TYPE P-2, >10'	EA	3	$6,992.00	$20976.00
0425 1325	INLETS, CURB, TYPE P-2, PARTIAL	EA	3	$6,992.00	$20976.00
0425 1329	INLETS, CURB TYPE P-2, MODIFY	EA	3	$6,992.00	$20976.00
0425 1331	INLETS, CURB, TYPE P-3, <10'	EA	3	$6,992.00	$20976.00

0425 1332	INLETS, CURB. TYPE P-3, >10'	EA	3	$6,992.00	$20976.00
0425 1335	INLETS, CURB, TYPE P-3, PARTIAL	EA	3	$6,992.00	$20976.00
0425 1341	INLETS, CURB, TYPE P-4, <10'	EA	3	$6,992.00	$20976.00
0425 1342	INLETS, CURB, TYPE P-4, >10'	EA	3	$6,992.00	$20976.00
0425 1345	INLETS, CURB, TYPE P-4, PARTIAL	EA	3	$6,992.00	$20976.00
0425 1349	INLETS, CURB, TYPE P-4, MODIFY	EA	3	$6,992.00	$20976.00
0425 1351	INLETS, CURB, TYPE P-5, <10'	EA	3	$6,992.00	$20976.00
0425 1352	INLETS, CURB, TYPE P-5, >10'	EA	3	$6,992.00	$20976.00
0425 1355	INLETS, CURB, TYPE P-5, PARTIAL	EA	3	$6,992.00	$20976.00
0425 1359	INLETS, CURB, TYPE P-5, MODIFY	EA	3	$6,992.00	$20976.00
0425 1361	INLETS, CURB, TYPE P-6, <10'	EA	3	$6,992.00	$20976.00
0425 1362	INLETS, CURB, TYPE P-6, >10'	EA	3	$6,992.00	$20976.00
0425 1365	INLETS, CURB, TYPE P-6, PARTIAL	EA	3	$6,992.00	$20976.00
0425 1369	INLETS, CURB, TYPE P-6, MODIFY	EA	3	$6,992.00	$20976.00
0425 1411	INLETS, CURB TYPE J-1, <10'	EA	3	$6,992.00	$20976.00
0425 1412	INLETS, CURB, TYPE J-1, >10'	EA	3	$6,992.00	$20976.00
0425 1415	INLETS, CURB, TYPE J-1, PARTIAL	EA	3	$6,992.00	$20976.00
0425 1419	INLETS, CURB, TYPE J-1, MODIFY	EA	3	$6,992.00	$20976.00
0425 1421	INLETS, CURB, TYPE J-2, <10'	EA	3	$6,992.00	$20976.00
0425 1422	INLETS, CURB, TYPE J-2, >10'	EA	3	$6,992.00	$20976.00
0425 1425	INLETS, CURB, TYPE J-2, PARTIAL	EA	3	$6,992.00	$20976.00
0425 1429	INLETS, CURB, TYPE J-2, MODIFY	EA	3	$6,992.00	$20976.00
0425 1431	INLETS, CURB, TYPE J-3, <10'	EA	3	$6,992.00	$20976.00
0425 1432	INLETS, CURB, TYPE J-3, >10'	EA	3	$6,992.00	$20976.00
0425 1435	INLETS, CURB, TYPE J-3, PARTIAL	EA	3	$6,992.00	$20976.00
0425 1441	INLETS, CURB, TYPE J-4, <10'	EA	3	$6,992.00	$20976.00
0425 1442	INLETS, CURB, TYPE J-4, >10'	EA	3	$6,992.00	$20976.00
0425 1445	INLETS, CURB, TYPE J-4, PARTIAL	EA	3	$6,992.00	$20976.00

0425 1451	INLETS, CURB, TYPE J-5, <10'	EA	3	$6,992.00	$20976.00
0425 1452	INLETS, CURB, TYPE J-5, >10'	EA	3	$6,992.00	$20976.00
0425 1455	INLETS, CURB, TYPE J-5, PARTIAL	EA	3	$6,992.00	$20976.00
0425 1459	INLETS, CURB, TYPE J-5, MODIFY	EA	3	$6,992.00	$20976.00
0425 1461	INLETS, CURB, TYPE J-6, <10'	EA	3	$6,992.00	$20976.00
0425 1462	INLETS, CURB, TYPE J-6, >10'	EA	3	$6,992.00	$20976.00
0425 1465	INLETS, CURB, TYPE J-6, PARTIAL	EA	3	$6,992.00	$20976.00
0425 1469	INLETS, CURB, TYPE J-6, MODIFY	EA	3	$6,992.00	$20976.00
0425 1471	INLETS, CURB, TYPE 7, <10'	EA	3	$6,992.00	$20976.00
0425 1472	INLETS, CURB, TYPE 7, >10'	EA	3	$6,992.00	$20976.00
0425 1473	INLETS, CURB, TYPE 7, J BOT , <10'	EA	3	$6,992.00	$20976.00
0425 1474	INLETS, CURB, TYPE 7, J BOT ,>10'	EA	3	$6,992.00	$20976.00
0425 1475	INLETS, CURB, TYPE 7, PARTIAL	EA	3	$6,992.00	$20976.00
0425 1479	INLETS, CURB, TYPE 7, MODIFY	EA	3	$6,992.00	$20976.00
0425 1481	INLETS, CURB, TYPE 8, <10'	EA	3	$6,992.00	$20976.00
0425 1483	INLETS, CURB, TYPE 8, J BOT , <10'	EA	3	$6,992.00	$20976.00
0425 1484	INLETS, CURB, TYPE 8, J BOT ,>10'	EA	3	$6,992.00	$20976.00
0425 1485	INLETS, CURB, TYPE 8, PARTIAL	EA	3	$6,992.00	$20976.00
0425 1489	INLETS, CURB, TYPE 8, MODIFY	EA	3	$6,992.00	$20976.00
0425 1501	INLETS, DT BOT, TYPE A, <10'	EA	3	$6,992.00	$20976.00
0425 1502	INLETS, DT BOT, TYPE A, >10'	EA	3	$6,992.00	$20976.00
0425 1503	INLETS, DT BOT, TYPE A, J BOT, <10'	EA	3	$6,992.00	$20976.00
0425 1504	INLETS, DT BOT, TYPE A, J BOT, >10'	EA	3	$6,992.00	$20976.00
0425 1505	INLETS, DT BOT, TYPE A, PARTIAL	EA	3	$6,992.00	$20976.00
0425 1511	INLETS, DT BOT, TYPE B, <10'	EA	3	$6,992.00	$20976.00
0425 1512	INLETS, DT BOT, TYPE B, >10'	EA	3	$6,992.00	$20976.00
0425 1513	INLETS, DT BOT, TYPE B, J BOT, <10'	EA	3	$6,992.00	$20976.00
0425 1514	INLETS, DT BOT, TYPE B, J BOT, >10'	EA	3	$6,992.00	$20976.00

0425 1515	INLETS, DT BOT, TYPE B, PARTIAL	EA	3	$6,992.00	$20976.00
0425 1519	INLETS, DT BOT, TYPE B, MODIFY	EA	3	$6,992.00	$20976.00
0425 1521	INLETS, DT BOT, TYPE C,<10'	EA	3	$6,992.00	$20976.00
0425 1522	INLETS, DT BOT, TYPE C,>10'	EA	3	$6,992.00	$20976.00
0425 1523	INLETS, DT BOT, TYPE C,JBOT, <10'	EA	3	$6,992.00	$20976.00
0425 1524	INLETS, DT BOT, TYPE C, JBOT, >10'	EA	3	$6,992.00	$20976.00
0425 1525	INLETS, DITCH BOTTOM, TYPE C, PARTIAL	EA	3	$6,992.00	$20976.00
0425 1529	INLETS, DT BOT, TYPE C, MODIFY	EA	3	$6,992.00	$20976.00
0425 1531	INLETS, DITCH BOTTOM, TYPE C MODIFIED- BACK OF SIDEWALK, <10'	EA	3	$6,992.00	$20976.00
0425 1532	INLETS, DITCH BOTTOM, TYPE C MODIFIED- BACK OF SIDEWALK, >10'	EA	3	$6,992.00	$20976.00
0425 1533	INLETS, DITCH BOTTOM TYPE C MODIFIED- BACK OF SIDEWALK, J BOT, <10'	EA	3	$6,992.00	$20976.00
0425 1534	INLETS, DITCH BOTTOM, TYPE C MODIFIED- BACK OF SIDEWALK, J BOT, >10'	EA	3	$6,992.00	$20976.00
0425 1535	INLETS, DITCH BOTTOM TYPE C MODIFIED- BACK OF SIDEWALK, PARTIAL	EA	3	$6,992.00	$20976.00
0425 1541	INLETS, DT BOT, TYPE D, <10'	EA	3	$6,992.00	$20976.00
0425 1542	INLETS, DT BOT, TYPE D, >10'	EA	3	$6,992.00	$20976.00
0425 1543	INLETS, DITCH BOTTOM, TYPE D, J BOT, <10'	EA	3	$6,992.00	$20976.00
0425 1544	INLETS, DITCH BOTTOM, TYPE D, J BOT, >10'	EA	3	$6,992.00	$20976.00
0425 1545	INLETS, DITCH BOTTOM, TYPE D, PARTIAL	EA	3	$6,992.00	$20976.00
0425 1549	INLETS, DT BOT, TYPE D, MODIFY	EA	3	$6,992.00	$20976.00
0425 1551	INLETS, DT BOT, TYPE E, <10'	EA	3	$6,992.00	$20976.00
0425 1552	INLETS, DT BOT, TYPE E, >10'	EA	3	$6,992.00	$20976.00
0425 1553	INLETS, DT BOT, TYPE E, J BOT, <10'	EA	3	$6,992.00	$20976.00
0425 1554	INLETS, DT BOT, TYPE E, J BOT, >10'	EA	3	$6,992.00	$20976.00
0425 1555	INLETS, DT BOT, TYPE E, PARTIAL	EA	3	$6,992.00	$20976.00
0425 1559	INLETS, DT BOT, TYPE E, MODIFY	EA	3	$6,992.00	$20976.00
0425 1561	INLETS, DT BOT, TYPE F, <10'	EA	3	$6,992.00	$20976.00
0425 1562	INLETS, DT BOT, TYPE F, >10'	EA	3	$6,992.00	$20976.00
0425 1563	INLETS, DITCH BOTTOM, TYPE F, J BOT, <10'	EA	3	$6,992.00	$20976.00

0425 1564	INLETS, DITCH BOTTOM, TYPE F, J BOT, >10'	EA	3	$6,992.00	$20976.00
0425 1565	INLETS, DITCH BOTTOM, TYPE F, PARTIAL	EA	3	$6,992.00	$20976.00
0425 1569	INLETS, DITCH BOTTOM, TYPE F, MODIFY	EA	3	$6,992.00	$20976.00
0425 1571	INLETS, DITCH BOTTOM, TYPE G, <10'	EA	3	$6,992.00	$20976.00
0425 1572	INLETS, DITCH BOTTOM, TYPE G, >10'	EA	3	$6,992.00	$20976.00
0425 1573	INLETS, DITCH BOTTOM, TYPE G, J BOT, <10'	EA	3	$6,992.00	$20976.00
0425 1574	INLETS, DITCH BOTTOM, TYPE G, J BOT, >10'	EA	3	$6,992.00	$20976.00
0425 1575	INLETS, DITCH BOTTOM, TYPE G, PARTIAL	EA	3	$6,992.00	$20976.00
0425 1579	INLETS, DITCH BOTTOM, TYPE G, MODIFY	EA	3	$6,992.00	$20976.00
0425 1581	INLETS, DT BOT, TYPE H, <10'	EA	3	$6,992.00	$20976.00
0425 1582	INLETS, DT BOT, TYPE H, >10'	EA	3	$6,992.00	$20976.00
0425 1583	INLETS, DT BOT, TYPE H, J BOTTOM <10'	EA	3	$6,992.00	$20976.00
0425 1584	INLETS, DT BOT, TYPE H, J BOTTOM >10'	EA	3	$6,992.00	$20976.00
0425 1585	INLETS, DT BOT, TYPE H, PARTIAL	EA	3	$6,992.00	$20976.00
0425 1589	INLETS, DT BOT, TYPE H, MODIFY	EA	3	$6,992.00	$20976.00
0425 1601	INLETS, DT BOT, TYPE J, <10'	EA	3	$6,992.00	$20976.00
0425 1602	INLETS, DT BOT, TYPE J, >10'	EA	3	$6,992.00	$20976.00
0425 1603	INLETS, DT BOT, TYPE J, J BOT, <10'	EA	3	$6,992.00	$20976.00
0425 1604	INLETS, DT BOT, TYPE J, JBOT,>10'	EA	3	$6,992.00	$20976.00
0425 1605	INLETS, DT BOT, TYPE J, PARTIAL	EA	3	$6,992.00	$20976.00
0425 1609	INLETS, DT BOT, TYPE J, MODIFY	EA	3	$6,992.00	$20976.00
0425 1611	INLETS, DITCH BOTTOM, TYPE K, <10'	EA	3	$6,992.00	$20976.00
0425 1619	INLETS, DITCH BOTTOM, TYPE K, J BOTTOM, MODIFY	EA	3	$6,992.00	$20976.00
0425 1701	INLETS, GUTTER, TYPE S, <10'	EA	3	$6,992.00	$20976.00
0425 1702	INLETS, GUTTER, TYPE S, >10'	EA	3	$6,992.00	$20976.00
0425 1703	INLETS, GUTTER, TYPE S, J BOTTOM <10'	EA	3	$6,992.00	$20976.00
0425 1704	INLETS, GUTTER, TYPE S, J BOTTOM, >10'	EA	3	$6,992.00	$20976.00
0425 1705	INLETS, GUTTER, TYPE S, PARTIAL	EA	3	$6,992.00	$20976.00

0425 1711	INLETS, GUTTER, TYPE V, <10'	EA	3	$6,992.00	$20976.00
0425 1712	INLETS, GUTTER, TYPE V, >10'	EA	3	$6,992.00	$20976.00
0425 1713	INLETS, GUTTER, TYPE V, J BOT, <10'	EA	3	$6,992.00	$20976.00
0425 1714	INLETS, GUTTER, TYPE V, J BOTTOM, >10'	EA	3	$6,992.00	$20976.00
0425 1715	INLETS, GUTTER, TYPE V, PARTIAL	EA	3	$6,992.00	$20976.00
0425 1719	INLETS, GUTTER, TYPE V, MODIFY	EA	3	$6,992.00	$20976.00
0425 1910	INLETS, CLOSED FLUME	EA	3	$6,992.00	$20976.00
0425 2 41	MANHOLES, P-7, <10'	EA	3	$6,992.00	$20976.00
0425 2 42	MANHOLES, P-7, >10'	EA	3	$6,992.00	$20976.00
0425 2 43	MANHOLES, P-7, PARTIAL	EA	3	$6,992.00	$20976.00
0425 2 61	MANHOLES, P-8, <10'	EA	3	$6,992.00	$20976.00
0425 2 62	MANHOLES, P-8, >10'	EA	3	$6,992.00	$20976.00
0425 2 63	MANHOLES, P-8, PARTIAL	EA	3	$6,992.00	$20976.00
0425 2 71	MANHOLES, J-7, <10'	EA	3	$6,992.00	$20976.00
0425 2 72	MANHOLES, J-7, >10'	EA	3	$6,992.00	$20976.00
0425 2 73	MANHOLES, J-7, PARTIAL	EA	3	$6,992.00	$20976.00
0425 2 91	MANHOLES, J-8, <10'	EA	3	$6,992.00	$20976.00
0425 2 92	MANHOLES, J-8, >10'	EA	3	$6,992.00	$20976.00
0425 2 93	MANHOLES, J-8, PARTIAL	EA	3	$6,992.00	$20976.00
0425 2110	MANHOLES, REPAIR	EA	3	$6,992.00	$20976.00
0425 3 41	JUNCTION BOX, DRAINAGE, P-7, <10'	EA	3	$6,992.00	$20976.00
0425 3 42	JUNCTION BOXES, P-7, >10'	EA	3	$6,992.00	$20976.00
0425 3 43	JUNCTION BOX, DRAINAGE, P-7, PARTIAL	EA	3	$6,992.00	$20976.00
0425 3 50	JUNCTION BOX, DRAINAGE, REPAIR	EA	3	$6,992.00	$20976.00
0425 3 61	JUNCTION BOXES, J-7, <10'	EA	3	$6,992.00	$20976.00
0425 3 62	JUNCTION BOXES, J-7, >10'	EA	3	$6,992.00	$20976.00
0425 3 63	JUNCTION BOXES, DRAINAGE, J-7, PARTIAL	EA	3	$6,992.00	$20976.00
0425 4	INLETS, ADJUST	EA	3	$6,992.00	$20976.00

0425 5	MANHOLE, ADJUST	EA	3	$6,992.00	$20976.00
0425 6	VALVE BOXES, ADJUST	EA	3	$6,992.00	$20976.00
0425 7	MANHOLE COVER- REPLACE	EA	3	$6,992.00	$20976.00
0425 8	DRAINAGE STRUCTURES, MISCELLANEOUS, ADJUST	EA	3	$6,992.00	$20976.00
0425 11	MODIFY EXISTING DRAINAGE STRUCTURE	EA	3	$6,992.00	$20976.00
0425 14 1	GRATE FOR EXISTING DRAINAGE STRUCTURE, FURNISH AND INSTALL	SF	3	$6.55	$19.65
0425 15 41	INLET TOP, REPAIR, CURB INLET	EA	3	$6,992.00	$20976.00
0425 15 42	INLET TOP, REPAIR, DITCH BOTTOM INLET	EA	3	$6,992.00	$20976.00
0425 15 51	INLET TOP, REPLACE, CURB INLET	EA	3	$6,992.00	$20976.00
0425 15 52	INLET TOP, REPLACE, DITCH BOTTOM INLET	EA	3	$6,992.00	$20976.00
0425 16 11	DRAINAGE MANHOLE- REPLACE TOP AND RIM	EA	3	$6,992.00	$20976.00
0425 82	REPLACE GRATE	EA	3	$6,992.00	$20976.00
0430 94 1	DESILTING PIPE, 0 - 24"	LF	50	$22.14	$1107.00
0430 94 2	DESILTING PIPE, 25 - 36"	LF	50	$22.14	$1107.00
430173112	PIPE CULVERT OPTIONAL MATERIAL, ROUND, 12", GUTTER DRAIN	LF	50	$22.14	$1107.00
430173115	PIPE CULVERT OPTIONAL MATERIAL, ROUND, 15", GUTTER DRAIN	LF	50	$22.14	$1107.00
430173118	PIPE CULVERT OPTIONAL MATERIAL, ROUND, 18", GUTTER DRAIN	LF	50	$22.14	$1107.00
430173124	PIPE CULVERT OPTIONAL MATERIAL, ROUND, 24", GUTTER DRAIN	LF	50	$22.14	$1107.00
430173130	PIPE CULVERT OPTIONAL MATERIAL, ROUND, 30", GUTTER DRAIN	LF	50	$22.14	$1107.00
430173136	PIPE CULVERT OPTIONAL MATERIAL, ROUND, 36", GUTTER DRAIN	LF	50	$22.14	$1107.00
430173142	PIPE CULVERT, OPTIONAL MATERIAL, ROUND, 42", GUTTER DRAIN	LF	50	$22.14	$1107.00
430173148	PIPE CULVERT, OPTIONAL MATERIAL, ROUND, 48" GUTTER DRAIN	LF	50	$22.14	$1107.00
430173218	PIPE CULVERT OPTIONAL MATERIAL, OTHER/ELLIPTICAL, 18", GUTTER DRAIN	LF	50	$22.14	$1107.00
430174112	PIPE CULVERT, OPTIONAL MATERIAL, ROUND, 12"SD	LF	50	$22.14	$1107.00
430174115	PIPE CULVERT, OPTIONAL MATERIAL, ROUND, 15"SD	LF	50	$22.14	$1107.00
430174118	PIPE CULVERT, OPTIONAL MATERIAL, ROUND, 18"SD	LF	50	$22.14	$1107.00
430174124	PIPE CULVERT, OPTIONAL MATERIAL, ROUND, 24"SD	LF	50	$22.14	$1107.00
430174130	PIPE CULVERT, OPTIONAL MATERIAL, ROUND, 30"SD	LF	50	$22.14	$1107.00

430174142	PIPE CULVERT, OPTIONAL MATERIAL, ROUND, 42"SD	LF	50	$22.14	$1107.00
430174148	PIPE CULVERT, OPTIONAL MATERIAL, ROUND, 48"SD	LF	50	$22.14	$1107.00
430174154	PIPE CULVERT, OPTIONAL MATERIAL, ROUND, 54"SD	LF	50	$22.14	$1107.00
430174160	PIPE CULVERT, OPTIONAL MATERIAL, ROUND, 60"SD	LF	50	$22.14	$1107.00
430174172	PIPE CULVERT, OPTIONAL MATERIAL, ROUND, 72"SD	LF	50	$22.14	$1107.00
430174215	PIPE CULVERT, OPTIONAL MATERIAL, OTHER SHAPE - ELLIP/ARCH, 15"SD	LF	50	$22.14	$1107.00
430174218	PIPE CULVERT, OPTIONAL MATERIAL, OTHER SHAPE - ELLIP/ARCH, 18"SD	LF	50	$22.14	$1107.00
430174224	PIPE CULVERT, OPTIONAL MATERIAL, OTHER SHAPE - ELLIP/ARCH, 24"SD	LF	50	$22.14	$1107.00
430174230	PIPE CULVERT, OPTIONAL MATERIAL, OTHER SHAPE - ELLIP/ARCH, 30"SD	LF	50	$22.14	$1107.00
430174236	PIPE CULVERT, OPTIONAL MATERIAL, OTHER SHAPE - ELLIP/ARCH, 36"SD	LF	50	$22.14	$1107.00
430174242	PIPE CULVERT, OPTIONAL MATERIAL, ELLIP/OTHER, 42"SD	LF	50	$22.14	$1107.00
430174248	PIPE CULVERT,OPTIONAL MATERIAL,OTHER-ELIP/ARCH, 48"SD	LF	50	$22.14	$1107.00
430175112	PIPE CULVERT,OPTIONAL MATERIAL,ROUND, 12"S/CD	LF	50	$22.14	$1107.00
430175115	PIPE CULVERT,OPTIONAL MATERIAL,ROUND, 15"S/CD	LF	50	$22.14	$1107.00
430175118	PIPE CULVERT, OPTIONAL MATERIAL, ROUND, 18"S/CD	LF	250	$22.14	$5535.00
430175124	PIPE CULVERT, OPTIONAL MATERIAL, ROUND, 24"S/CD	LF	50	$22.14	$1107.00
430175130	PIPE CULVERT, OPT MATERIAL, ROUND, 30"S/CD	LF	50	$22.14	$1107.00
430175136	PIPE CULVERT, OPT MATERIAL, ROUND, 36"S/CD	LF	50	$22.14	$1107.00
430175140	PIPE CULVERT, OPT MATERIAL, ROUND, 40"S/CD	LF	50	$22.14	$1107.00
430175142	PIPE CULVERT, OPT MATERIAL, ROUND, 42"S/CD	LF	50	$22.14	$1107.00
430175148	PIPE CULVERT, OPT MATERIAL, ROUND, 48"S/CD	LF	50	$22.14	$1107.00
430175154	PIPE CULVERT, OPT MATERIAL, ROUND, 54"S/CD	LF	50	$22.14	$1107.00
430175160	PIPE CULVERT, OPT MATERIAL, ROUND, 60"S/CD	LF	50	$22.14	$1107.00
430175166	PIPE CULVERT, OPT MATERIAL, ROUND, 66"S/CD	LF	50	$22.14	$1107.00
430175172	PIPE CULVERT, OPT MATERIAL, ROUND, 72"S/CD	LF	50	$22.14	$1107.00
430175178	PIPE CULVERT, OPT MATERIAL, ROUND, 78" STORM/CROSS DRAIN	LF	50	$22.14	$1107.00
430175184	PIPE CULVERT, OPT MATERIAL, ROUND, 84"S/CD	LF	50	$22.14	$1107.00
430175196	PIPE CULVERT, OPT MATERIAL, ROUND, 96"S/CD	LF	50	$22.14	$1107.00

430175215	PIPE CULVERT,OPTIONAL MATERIAL,OTHER-ELIP/ARCH, 15"S/CD	LF	50	$22.14	$1107.00
430175218	PIPE CULVERT,OPTIONAL MATERIAL,OTHER-ELIP/ARCH, 18"S/CD	LF	50	$22.14	$1107.00
430175224	PIPE CULVERT,OPTIONAL MATERIAL,OTHER SHAPE-ELIP/ARCH, 24"S/CD	LF	50	$22.14	$1107.00
430175230	PIPE CULVERT, OPT MATERIAL, OTHER SHAPE - ELIP/ARCH, 30"S/CD	LF	50	$22.14	$1107.00
430175236	PIPE CULVERT, OPT MATERIAL, OTHER SHAPE - ELIP/ARCH, 36"S/CD	LF	50	$22.14	$1107.00
430175242	PIPE CULVERT, OPT MATERIAL, OTHER SHAPE - ELIP/ARCH, 42"S/CD	LF	50	$22.14	$1107.00
430175248	PIPE CULVERT, OPT MATERIAL, OTHER SHAPE - ELIP/ARCH, 48"S/CD	LF	50	$22.14	$1107.00
430175254	PIPE CULVERT, OPT MATERIAL, OTHER SHAPE - ELIP/ARCH, 54"S/CD	LF	50	$22.14	$1107.00
430175260	PIPE CULVERT, OPT MATERIAL, OTHER SHAPE - ELIP/ARCH, 60"S/CD	LF	50	$22.14	$1107.00
430175266	PIPE CULVERT, OPT MATERIAL, OTHER SHAPE - ELIP/ARCH, 66"S/CD	LF	50	$22.14	$1107.00
430175272	PIPE CULVERT, OPT MATERIAL, OTHER SHAPE - ELIP/ARCH, 72"S/CD	LF	50	$22.14	$1107.00
430175299	PIPE CULVERT,OPTIONAL MATERIAL,OTHER SHAPE-ELIP/ARCH, 99" OR >, S/CD	LF	50	$22.14	$1107.00
430185118	PIPE CULVERT,OPTIONAL MATERIAL,ROUND, JACK & BORE, 18" , STORM AND CROSS DRAIN	LF	50	$22.14	$1107.00
430185124	PIPE CULVERT,OPTIONAL MATERIAL,ROUND, JACK & BORE, 24", STORM AND CROSS DRAIN	LF	50	$22.14	$1107.00
430185130	PIPE CULVERT,OPTIONAL MATERIAL,ROUND, JACK & BORE, 30", STORM AND CROSS DRAIN	LF	50	$22.14	$1107.00
430185136	PIPE CULVERT,OPTIONAL MATERIAL,ROUND, JACK & BORE, 36", STORM AND CROSS DRAIN	LF	50	$22.14	$1107.00
430185142	PIPE CULVERT,OPTIONAL MATERIAL,ROUND, JACK & BORE, 42", STORM AND CROSS DRAIN	LF	50	$22.14	$1107.00
430185148	PIPE CULVERT,OPTIONAL MATERIAL,ROUND, JACK & BORE, 48", STORM AND CROSS DRAIN	LF	50	$22.14	$1107.00
430185154	PIPE CULVERT,OPTIONAL MATERIAL,ROUND, JACK & BORE, 54", STORM AND CROSS DRAIN	LF	50	$22.14	$1107.00
430185160	PIPE CULVERT,OPTIONAL MATERIAL,ROUND, JACK & BORE, 60" , STORM AND CROSS DRAIN	LF	50	$22.14	$1107.00
430185166	PIPE CULVERT,OPTIONAL MATERIAL,ROUND, JACK & BORE, 66" , STORM AND CROSS DRAIN	LF	50	$22.14	$1107.00
430185178	PIPE CULVERT,OPTIONAL MATERIAL,ROUND, JACK & BORE, 78" , STORM AND CROSS DRAIN	LF	50	$22.14	$1107.00
0430200 21	FLARED END SECTION, CONCRETE, 12"	EA	3	$6,992.00	$20976.00
0430200 23	FLARED END SECTION, CONCRETE, 15"	EA	3	$6,992.00	$20976.00
0430200 25	FLARED END SECTION, CONCRETE, 18"	EA	3	$6,992.00	$20976.00
0430200 29	FLARED END SECTION, CONCRETE, 24"	EA	3	$6,992.00	$20976.00
0430200 33	FLARED END SECTION, CONCRETE, 30"	EA	3	$6,992.00	$20976.00
0430200 38	FLARED END SECTION, CONCRETE, 36"	EA	3	$6,992.00	$20976.00

0430200 40	FLARED END SECTION, CONCRETE, 42"	EA	3	$6,992.00	$20976.00
0430200 41	FLARED END SECTION, CONCRETE, 48"	EA	3	$6,992.00	$20976.00
0430200 42	FLARED END SECTION, CONCRETE, 54"	EA	3	$6,992.00	$20976.00
0430200 43	FLARED END SECTION, CONCRETE, 60"	EA	3	$6,992.00	$20976.00
0430200 44	FLARED END SECTION, CONCRETE, 66"	EA	3	$6,992.00	$20976.00
0430200 45	FLARED END SECTION, CONCRETE, 72"	EA	3	$6,992.00	$20976.00
430600025	U-ENDWALL, STD 260, 1:6 SLOPE, 18"PIPE	EA	3	$6,992.00	$20976.00
430600125	U-ENDWALL, STD 260, 1:4 SLOPE, 18"PIPE	EA	3	$6,992.00	$20976.00
430602123	U-ENDWALL, WITH GRATE,STD INDEX 260, 1:4 SLOPE, 15"	EA	3	$6,992.00	$20976.00
430602125	U-ENDWALL, WITH GRATE,STD 260, 1:4 SLOPE, 18"	EA	3	$6,992.00	$20976.00
430602129	U-ENDWALL, WITH GRATE,STD 260, 1:4 SLOPE, 24"	EA	3	$6,992.00	$20976.00
430602133	U-ENDWALL, WITH GRATE,STD INDEX 260, 1:4 SLOPE, 30"	EA	3	$6,992.00	$20976.00
430610025	U-ENDWALL, STD 261, 1:6 SLOPE, 18"PIPE	EA	3	$6,992.00	$20976.00
430610029	U-ENDWALL, STD 261, 1:6 SLOPE, 24"PIPE	EA	3	$6,992.00	$20976.00
430610033	U-ENDWALL, STD 261, 1:6 SLOPE, 30"PIPE	EA	3	$6,992.00	$20976.00
430610123	U-ENDWALL, STD 261, 1:4 SLOPE, 15"PIPE	EA	3	$6,992.00	$20976.00
430610125	U-ENDWALL, STD 261, 1:4 SLOPE, 18"PIPE	EA	3	$6,992.00	$20976.00
430610129	U-ENDWALL, STD 261, 1:4 SLOPE, 24"PIPE	EA	3	$6,992.00	$20976.00
430610133	U-ENDWALL, STD 261, 1:4 SLOPE, 30"PIPE	EA	3	$6,992.00	$20976.00
430610223	U-ENDWALL, STD 261, 1:3 SLOPE, 15"PIPE	EA	3	$6,992.00	$20976.00
430610225	U-ENDWALL, STD 261, 1:3 SLOPE, 18"PIPE	EA	3	$6,992.00	$20976.00
430610229	U-ENDWALL, STD 261, 1:3 SLOPE, 24"PIPE	EA	3	$6,992.00	$20976.00
430610233	U-ENDWALL, STD 261, 1:3 SLOPE, 30"PIPE	EA	3	$6,992.00	$20976.00
430610323	U-ENDWALL, STD 261, 1:2 SLOPE, 15"PIPE	EA	3	$6,992.00	$20976.00
430610325	U-ENDWALL, STD 261, 1:2 SLOPE, 18"PIPE	EA	3	$6,992.00	$20976.00
430610329	U-ENDWALL, STD 261,1:2 SLOPE, 24"PIPE	EA	3	$6,992.00	$20976.00
430611023	U-ENDWALL, STD 261, BAFFLES, 1:6 SLOPE, 15"PIPE	EA	3	$6,992.00	$20976.00
430611025	U-ENDWALL, STD 261, BAFFLES, 1:6 SLOPE, 18"PIPE	EA	3	$6,992.00	$20976.00

430611029	U-ENDWALL, STD 261, BAFFLES, 1:6 SLOPE, 24"PIPE	EA	3	$6,992.00	$20976.00
430611033	U-ENDWALL, STD 261, BAFFLES, 1:6 SLOPE, 30"PIPE	EA	3	$6,992.00	$20976.00
430611123	U-ENDWALL WITH BAFFLES, STD 261, 1:4 SLOPE, 15"PIPE	EA	3	$6,992.00	$20976.00
430611125	U-ENDWALL WITH BAFFLES, STD 261, 1:4 SLOPE, 18"PIPE	EA	3	$6,992.00	$20976.00
430611129	U-ENDWALL WITH BAFFLES, STD 261, 1:4 SLOPE, 24"PIPE	EA	3	$6,992.00	$20976.00
430611133	U-ENDWALL WITH BAFFLES,STD 261,1:4 SLOPE,30"PIPE	EA	3	$6,992.00	$20976.00
430611223	U-ENDWALL WITH BAFFLES, STD 261, 1:3 SLOPE, 15"PIPE	EA	3	$6,992.00	$20976.00
430611225	U-ENDWALL WITH BAFFLES, STD 261, 1:3 SLOPE, 18"PIPE	EA	3	$6,992.00	$20976.00
430611229	U-ENDWALL WITH BAFFLES, STD 261, 1:3 SLOPE, 24"PIPE	EA	3	$6,992.00	$20976.00
430611233	U-ENDWALL, STD 261, BAFFLES, 1:3 SLOPE, 30"PIPE	EA	3	$6,992.00	$20976.00
430611323	U-ENDWALL WITH BAFFLES, STD 261, 1:2 SLOPE, 15"PIPE	EA	3	$6,992.00	$20976.00
430611325	U-ENDWALL WITH BAFFLES, STD 261, 1:2 SLOPE, 18"PIPE	EA	3	$6,992.00	$20976.00
430611329	U-ENDWALL WITH BAFFLES, STD 261, 1:2 SLOPE, 24"PIPE	EA	3	$6,992.00	$20976.00
430611333	U-ENDWALL, BAFFLES, STD 261, 1:2 SLOPE, 30"PIPE	EA	3	$6,992.00	$20976.00
430612023	U-ENDWALL WITH GRATE, STD 261, 1:6 SLOPE, 15"	EA	3	$6,992.00	$20976.00
430612025	U-ENDWALL WITH GRATE, STD 261, 1:6 SLOPE, 18"PIPE	EA	3	$6,992.00	$20976.00
430612029	U-ENDWALL WITH GRATE, STD 261, 1:6 SLOPE, 24"PIPE	EA	3	$6,992.00	$20976.00
430612033	U-ENDWALL WITH GRATE, STD 261, 1:6 SLOPE, 30"	EA	3	$6,992.00	$20976.00
430612125	U-ENDWALL WITH GRATE, STD 261, 1:4 SLOPE, 18"PIPE	EA	3	$6,992.00	$20976.00
430612129	U-ENDWALL WITH GRATE, STD 261, 1:4 SLOPE, 24"PIPE	EA	3	$6,992.00	$20976.00
430612133	U-ENDWALL, GRATE, STD 261, 1:4 SLOPE, 30" PIPE	EA	3	$6,992.00	$20976.00
430612329	U-ENDWALL WITH GRATE, STD 261, 1:2 SLOPE, 24"PIPE	EA	3	$6,992.00	$20976.00
430612333	U-ENDWALL, GRATE, STD 261, 1:2 SLOPE, 30" PIPE	EA	3	$6,992.00	$20976.00
430613025	U-ENDWALL, WITH BAFFLES & GRATE, STD 261,1:6 SLOPE, 18"	EA	3	$6,992.00	$20976.00
430613029	U-ENDWALL, WITH BAFFLES & GRATE, STD 261,1:6 SLOPE, 24"PIPE	EA	3	$6,992.00	$20976.00
430613033	U-ENDWALL, WITH BAFFLES & GRATE, STD 261,1:6 SLOPE, 30"	EA	3	$6,992.00	$20976.00
430613123	U-ENDWALL, WITH BAFFLES & GRATE, STD 261,1:4 SLOPE,15"PIPE	EA	3	$6,992.00	$20976.00
430613125	U-ENDWALL, WITH BAFFLES & GRATE, STD 261,1:4 SLOPE,18"PIPE	EA	3	$6,992.00	$20976.00

430613129	U-ENDWALL, WITH BAFFLES & GRATE, STD 261,1:4 SLOPE, 24"PIPE	EA	3	$6,992.00	$20976.00
430613133	U-ENDWALL, WITH BAFFLES & GRATE, STD 261,1:4 SLOPE,30"PIPE	EA	3	$6,992.00	$20976.00
430613225	U-ENDWALL, WITH BAFFLES & GRATE, STD 261,1:3 SLOPE,18"PIPE	EA	3	$6,992.00	$20976.00
430613229	U-ENDWALL, WITH BAFFLES & GRATE, STD 261,1:3 SLOPE, 24 "PIPE	EA	3	$6,992.00	$20976.00
430613233	U-ENDWALL, WITH BAFFLES & GRATE, STD 261,1:3 SLOPE,30"PIPE	EA	3	$6,992.00	$20976.00
430613325	U-ENDWALL, WITH BAFFLES & GRATE, STD 261,1:2 SLOPE,18"PIPE	EA	3	$6,992.00	$20976.00
430613333	U-ENDWALL, WITH BAFFLES & GRATE, STD 261,1:2 SLOPE,30"PIPE	EA	3	$6,992.00	$20976.00
430830	PIPE FILLING AND PLUGGING- PLACE OUT OF SERVICE	CY	20	$9.38	$187.60
430950	DESILTING CONCRETE BOX CULVERT	CY	20	$9.38	$187.60
0430963 1	PVC PIPE FOR BACK OF SIDEWALK, 4"	LF	50	$22.14	$1107.00
430982120	MITERED END SECTION, OPTIONAL ROUND, 8" CD	EA	3	$6,992.00	$20976.00
430982121	MITERED END SECTION, OPTIONAL ROUND, 12" CD	EA	3	$6,992.00	$20976.00
430982123	MITERED END SECTION, OPTIONAL ROUND, 15" CD	EA	3	$6,992.00	$20976.00
430982125	MITERED END SECTION, OPTIONAL ROUND, 18" CD	EA	3	$6,992.00	$20976.00
430982129	MITERED END SECTION, OPTIONAL ROUND, 24" CD	EA	3	$6,992.00	$20976.00
430982133	MITERED END SECTION, OPTIONAL ROUND, 30" CD	EA	3	$6,992.00	$20976.00
430982138	MITERED END SECTION, OPTIONAL ROUND, 36" CD	EA	3	$6,992.00	$20976.00
430982140	MITERED END SECTION, OPTIONAL ROUND, 42" CD	EA	3	$6,992.00	$20976.00
430982141	MITERED END SECTION, OPTIONAL ROUND, 48" CD	EA	3	$6,992.00	$20976.00
430982142	MITERED END SECTION, OPTIONAL ROUND, 54" CD	EA	3	$6,992.00	$20976.00
430982143	MITERED END SECTION, OPTIONAL ROUND, 60" CD	EA	3	$6,992.00	$20976.00
430982144	MITERED END SECTION, OPTIONAL ROUND, 66" CD	EA	3	$6,992.00	$20976.00
430982145	MITERED END SECTION, OPTIONAL ROUND, 72" CD	EA	3	$6,992.00	$20976.00
430982147	MITERED END SECTION, OPTIONAL ROUND, 84" CD	EA	3	$6,992.00	$20976.00
430982623	MITERED END SECTION, OPTIONAL - ELLIPTICAL / ARCH, 15" CD	EA	3	$6,992.00	$20976.00
430982625	MITERED END SECTION, OPTIONAL - ELLIPTICAL / ARCH, 18" CD	EA	3	$6,992.00	$20976.00
430982629	MITERED END SECTION, OPTIONAL - ELLIPTICAL / ARCH, 24" CD	EA	3	$6,992.00	$20976.00
430982633	MITERED END SECTION, OPTIONAL - ELLIPTICAL / ARCH, 30" CD	EA	3	$6,992.00	$20976.00

430982638	MITERED END SECTION, OPTIONAL - ELLIPTICAL / ARCH, 36" CD	EA	3	$6,992.00	$20976.00
430982640	MITERED END SECTION, OPTIONAL - ELLIPTICAL / ARCH, 42" CD	EA	3	$6,992.00	$20976.00
430982641	MITERED END SECTION, OPTIONAL - ELLIPTICAL / ARCH, 48" CD	EA	3	$6,992.00	$20976.00
430982642	MITERED END SECTION, OPTIONAL - ELLIPTICAL / ARCH, 54" CD	EA	3	$6,992.00	$20976.00
430982643	MITERED END SECTION, OPTIONAL - ELLIPTICAL / ARCH, 60" CD	EA	3	$6,992.00	$20976.00
430982645	MITERED END SECTION, OPTIONAL - ELLIPTICAL / ARCH, 72" CD	EA	3	$6,992.00	$20976.00
430984120	MITERED END SECTION, OPTIONAL ROUND, 8" SD	EA	3	$6,992.00	$20976.00
430984121	MITERED END SECTION, OPTIONAL ROUND, 12" SD	EA	3	$6,992.00	$20976.00
430984123	MITERED END SECTION, OPTIONAL ROUND, 15" SD	EA	3	$6,992.00	$20976.00
430984125	MITERED END SECTION, OPTIONAL ROUND, 18" SD	EA	3	$6,992.00	$20976.00
430984129	MITERED END SECTION, OPTIONAL ROUND, 24" SD	EA	3	$6,992.00	$20976.00
430984133	MITERED END SECTION , OPTIONAL ROUND, 30" SD	EA	3	$6,992.00	$20976.00
430984138	MITERED END SECTION , OPTIONAL ROUND, 36" SIDE DRAIN	EA	3	$6,992.00	$20976.00
430984140	MITERED END SECTION , OPTIONAL ROUND, 42" SD	EA	3	$6,992.00	$20976.00
430984141	MITERED END SECTION , OPTIONAL ROUND, 48" SD	EA	3	$6,992.00	$20976.00
430984142	MITERED END SECTION , OPTIONAL ROUND, 54" SD	EA	3	$6,992.00	$20976.00
430984143	MITERED END SECTION , OPTIONAL ROUND, 60" SD	EA	3	$6,992.00	$20976.00
430984144	MITERED END SECTION, OPTIONAL ROUND, 66" SIDE DRAIN	EA	3	$6,992.00	$20976.00
430984145	MITERED END SECTION, OPTIONAL ROUND, 72" SIDE DRAIN	EA	3	$6,992.00	$20976.00
430984147	MITERED END SECTION, OPTIONAL ROUND, 84" SD	EA	3	$6,992.00	$20976.00
430984623	MITERED END SECTION, OPTIONAL OTHER - ELLIP/ARCH, 15" SD	EA	3	$6,992.00	$20976.00
430984625	MITERED END SECT, OPTIONAL - ELLIPTICAL / ARCH, 18" SD	EA	3	$6,992.00	$20976.00
430984629	MITERED END SECT, OPTIONAL - ELLIPTICAL / ARCH, 24" SD	EA	3	$6,992.00	$20976.00
430984633	MITERED END SECT, OPTIONAL /ELLIP/ARCH, 30" SD	EA	3	$6,992.00	$20976.00
430984638	MITERED END SECT, OPTIONAL /ELLIP/ARCH, 36" SD	EA	3	$6,992.00	$20976.00
430984640	MITERED END SECT, OPTIONAL /ELLIP/ARCH, 42" SD	EA	3	$6,992.00	$20976.00
430984641	MITERED END SECT, OPTIONAL /ELLIP/ARCH, 48" SD	EA	3	$6,992.00	$20976.00
430984642	MITERED END SECT, OPTIONAL /ELLIP/ARCH, 54" SD	EA	3	$6,992.00	$20976.00

430984643	MITERED END SECTION, OPTIONAL SHAPE /ELLIP/ARCH, 60" SIDE DRAIN	EA	3	$6,992.00	$20976.00
430984644	MITERED END SECT, OPTIONAL /ELLIP/ARCH, 66" SD	EA	3	$6,992.00	$20976.00
430984645	MITERED END SECT, OPTIONAL /ELLIP/ARCH, 72" SD	EA	3	$6,992.00	$20976.00
430990	MITERED END SECT, REPLACE GRATE	EA	3	$6,992.00	$20976.00
0431 1 1	PIPE LINER, OPTIONAL MATERIAL, 0-24"	LF	50	$22.14	$1107.00
0431 1 2	PIPE LINER, OPTIONAL MATERIAL, 25-36"	LF	50	$22.14	$1107.00
0431 1 3	PIPE LINER, OPTIONAL MATERIAL, 37-48"	LF	50	$22.14	$1107.00
0431 1 4	PIPE LINER, OPTIONAL MATERIAL, 49 - 60"	LF	50	$22.14	$1107.00
0431 1 5	PIPE LINER, OPTIONAL MATERIAL, 61" AND GREATER	LF	50	$22.14	$1107.00
0436 1 1	TRENCH DRAIN, STANDARD	LF	50	$22.14	$1107.00
0440 1 10	UNDERDRAIN, TYPE I	LF	50	$22.14	$1107.00
0440 1 20	UNDERDRAIN, TYPE II	LF	50	$22.14	$1107.00
0440 1 30	UNDERDRAIN, TYPE III	LF	50	$22.14	$1107.00
0440 1 50	UNDERDRAIN, TYPE V	LF	50	$22.14	$1107.00
0440 70	UNDERDRAIN INSPECTION BOX	EA	5	$6,992.00	$34960.00
0440 73 1	UNDERDRAIN OUTLET PIPE, 4"	LF	50	$22.14	$1107.00
0440 73 2	UNDERDRAIN OUTLET PIPE, 6"	LF	50	$22.14	$1107.00
0440 73 3	UNDERDRAIN OUTLET PIPE, 8"	LF	50	$22.14	$1107.00
0440 73 4	UNDERDRAIN OUTLET PIPE, 10"	LF	50	$22.14	$1107.00
0440 73 5	UNDERDRAIN OUTLET PIPE, 12"	LF	50	$22.14	$1107.00
0443 70 3	FRENCH DRAIN, 18"	LF	50	$22.14	$1107.00
0443 70 4	FRENCH DRAIN, 24"	LF	50	$22.14	$1107.00
0443 70 5	FRENCH DRAIN, 30"	LF	50	$22.14	$1107.00
0443 70 6	FRENCH DRAIN, 36"	LF	50	$22.14	$1107.00
0443 70 7	FRENCH DRAIN, 42"	LF	50	$22.14	$1107.00
0443 70 8	FRENCH DRAIN, 48"	LF	50	$22.14	$1107.00
0443 70 9	FRENCH DRAIN, 54"	LF	50	$22.14	$1107.00
0443 70 10	FRENCH DRAIN, 60"	LF	50	$22.14	$1107.00

0443 72 10	FRENCH DRAIN- AGGREGATE WITHOUT PIPE, 0-0.9' DEPTH	SY	10	$7.91	$79.10
0443 72 11	FRENCH DRAIN- AGGREGATE WITHOUT PIPE, 1-1.9' DEPTH	SY	10	$7.91	$79.10
0443 72 12	FRENCH DRAIN- AGGREGATE WITHOUT PIPE, 2-2.9' DEPTH	SY	10	$7.91	$79.10
0443 72 13	FRENCH DRAIN- AGGREGATE WITHOUT PIPE, 3-3.9' DEPTH	SY	10	$7.91	$79.10
0443 72 14	FRENCH DRAIN- AGGREGATE WITHOUT PIPE, 4-4.9' DEPTH	SY	10	$7.91	$79.10
0446 1 1	EDGEDRAIN DRAINCRETE, STANDARD	LF	50	$22.14	$1107.00
0446 71 1	EDGEDRAIN OUTLET PIPE, 4"	LF	50	$22.14	$1107.00
0515 1 1	PIPE HANDRAIL - GUIDERAIL, STEEL	LF	50	$22.14	$1107.00
0515 1 2	PIPE HANDRAIL - GUIDERAIL, ALUMINUM	LF	50	$22.14	$1107.00
0515 1 41	PIPE HANDRAIL - GUIDERAIL, RELOCATE, STEEL	LF	50	$22.14	$1107.00
0515 1 42	PIPE HANDRAIL - GUIDERAIL, RELOCATE, ALUMINUM	LF	50	$22.14	$1107.00
0515 2111	PEDESTRIAN / BICYCLE RAILING, NS, 42" TYPE 1	LF	50	$22.14	$1107.00
0515 2211	PEDESTRIAN / BICYCLE RAILING, STEEL, 42" TYPE 1	LF	50	$22.14	$1107.00
0515 2212	PEDESTRIAN / BICYCLE RAILING, STEEL, 42" TYPE 2	LF	50	$22.14	$1107.00
0515 2213	PEDESTRIAN / BICYCLE RAILING, STEEL, 42" TYPE 3	LF	50	$22.14	$1107.00
0515 2221	PEDESTRIAN/ BICYCLE RAILING, STEEL ONLY,54" TYPE 1	LF	50	$22.14	$1107.00
0515 2231	PEDESTRIAN/ BICYCLE RAILING, STEEL ONLY,48" TYPE 1	LF	50	$22.14	$1107.00
0515 2311	PEDESTRIAN/ BICYCLE RAILING, ALUMINUM ONLY,42" TYPE 1	LF	50	$22.14	$1107.00
0515 2312	PEDESTRIAN / BICYCLE RAILING, ALUMINUM, 42" TYPE 2	LF	50	$22.14	$1107.00
0515 2313	PEDESTRIAN / BICYCLE RAILING, ALUMINUM, 42" TYPE 3	LF	50	$22.14	$1107.00
0515 2321	PEDESTRIAN/ BICYCLE RAILING, ALUMINUM ONLY,54" TYPE 1	LF	50	$22.14	$1107.00
0515 2411	PEDESTRIAN / BICYCLE RAILING, SPECIAL MATERIALS- WEATHERING STEEL, 42" TYPE 1	LF	50	$22.14	$1107.00
0515 2500	PEDESTRIAN / BICYCLE RAILING, RELOCATE	LF	50	$22.14	$1107.00
0519 78	BOLLARDS	EA	10	$6,992.00	$69920.00
0520 1 7	CONCRETE CURB & GUTTER, TYPE E	LF	1000	$37.38	$37380.00
0520 1 10	CONCRETE CURB & GUTTER, TYPE F	LF	5000	$22.14	$110700.00
0520 1 11	CONCRETE CURB & GUTTER, VARIABLE HEIGHT TYPE F	LF	100	$22.14	$2214.00
0520 1 12	CONCRETE CURB & GUTTER, TYPE F WITH SPECIAL GUTTER PROFILE	LF	100	$22.14	$2214.00

0520 2 1	CONCRETE CURB, TYPE A	LF	100	$22.14	$2214.00
0520 2 2	CONCRETE CURB, TYPE B	LF	1000	$22.14	$22140.00
0520 2 4	CONCRETE CURB, TYPE D	LF	1000	$22.14	$22140.00
0520 3	VALLEY GUTTER- CONCRETE	LF	100	$22.14	$2214.00
0520 5 11	TRAFFIC SEPARATOR CONCRETE - TYPE I, 4' WIDE	LF	50	$22.14	$1107.00
0520 5 12	TRAFFIC SEPARATOR CONCRETE - TYPE I, 6' WIDE	LF	50	$22.14	$1107.00
520 5 16	TRAFFIC SEPARATOR CONCRETE- TYPE I, 8.5' WIDE	LF	50	$22.14	$1107.00
0520 5 21	TRAFFIC SEPARATOR - CONCRETE, TYPE II, 4' WIDE	LF	50	$22.14	$1107.00
0520 5 22	TRAFFIC SEPARATOR - CONCRETE, TYPE II, 6' WIDE	LF	50	$22.14	$1107.00
0520 5 26	TRAFFIC SEPARATOR CONCRETE- TYPE II, 8.5' WIDE	LF	50	$22.14	$1107.00
0520 5 41	TRAFFIC SEPARATOR CONCRETE, TYPE IV, 4' WIDE	LF	50	$22.14	$1107.00
0520 5 42	TRAFFIC SEPARATOR CONCRETE, TYPE IV, 6' WIDE	LF	50	$22.14	$1107.00
0520 5 46	TRAFFIC SEPARATOR CONCRETE, TYPE IV, 8.5' WIDE	LF	50	$22.14	$1107.00
0520 5 51	TRAF SEP CONC, TYPE V, 4' WIDE	LF	50	$22.14	$1107.00
0520 6	SHOULDER GUTTER- CONCRETE	LF	50	$22.14	$1107.00
0520 70	CONCRETE TRAFFIC SEPARATOR, SPECIAL - VARIABLE WIDTH	SY	50	$7.91	$395.50
0521 72 2	SHOULDER CONCRETE BARRIER WALL, BOX CULVERT	LF	100	$22.14	$2214.00
0521 72 3	SHOULDER CONCRETE BARRIER WALL, RIGID-SHOULDER	LF	100	$22.14	$2214.00
0521 72 4	SHOULDER CONCRETE BARRIER WALL, RIGID RETAINING	LF	100	$22.14	$2214.00
0521 72 5	SHOULDER CONCRETE BARRIER WALL, RIGID-CURB & GUTTER	LF	100	$22.14	$2214.00
0521 72 10	SHOULDER CONCRETE BARRIER WALL, RIGID SHOULDER 42"	LF	100	$22.14	$2214.00
0521 72 11	SHOULDER CONCRETE BARRIER WALL, RIGID SHOULDER 54"	LF	100	$22.14	$2214.00
0521 73	CONCRETE BARRIER WALL, REMOVAL	LF	20	$22.14	$442.80
0522 1	CONCRETE SIDEWALK AND DRIVEWAY, 4" THICK	SY	3000	$59.42	$178260.00
0522 2	CONCRETE SIDEWALK AND DRIVEWAY, 6" THICK	SY	500	$7.91	$3955.00
0522 3	BUS BOARDING PAD - CONCRETE	SY	50	$7.91	$395.50
0522 4	BUS SHELTER PAD - CONCRETE	SY	50	$7.91	$395.50
0524 1 1	CONCRETE DITCH PAVT, NON REINFORCED, 3"	SY	10	$7.91	$79.10

0524 1 2	CONCRETE DITCH PAVEMENT, NON REINFORCED, 4"	SY	10	$7.91	$79.10
0524 1 3	CONCRETE DITCH PAVEMENT, NON REINFORCED, 5"	SY	10	$7.91	$79.10
0524 1 4	CONCRETE DITCH PAVEMENT, NON REINFORCED, 6"	SY	10	$7.91	$79.10
0524 1 19	CONCRETE DITCH PAVT, 3", REINFORCED	SY	10	$7.91	$79.10
0524 1 29	CONCRETE DITCH PAVEMENT, 4", REINFORCED	SY	10	$7.91	$79.10
0524 1 49	CONCRETE DITCH PAVEMENT, 6", REINFORCED	SY	10	$7.91	$79.10
0524 2 1	CONCRETE SLOPE PAVEMENT,NON REINFORCED, 3"	SY	10	$7.91	$79.10
0524 2 2	CONCRETE SLOPE PAVEMENT,NON REINFORCED, 4"	SY	10	$7.91	$79.10
0524 2 4	CONCRETE SLOPE PAVEMENT,NON REINFORCED, 6"	SY	10	$7.91	$79.10
0524 2 29	CONCRETE SLOPE PAVEMENT, 4", REINFORCED	SY	10	$7.91	$79.10
0524 2 49	CONCRETE SLOPE PAVEMENT, 6", REINFORCED	SY	10	$7.91	$79.10
0524 3	CONC CORE DITCH BLOCKS	CY	10	$9.38	$93.80
0526 1 1	PAVERS, ARCHITECTURAL, ROADWAY	SY	50	$7.91	$395.50
0526 1 2	PAVERS, ARCHITECTURAL, SIDEWALK	SY	50	$7.91	$395.50
0527 2	DETECTABLE WARNINGS	SF	1000	$6.55	$6550.00
0530 1	RIPRAP, SAND-CEMENT	CY	50	$9.38	$469.00
0530 3 3	RIPRAP- RUBBLE, BANK AND SHORE	TN	10	$115.81	$1158.10
0530 3 4	RIPRAP, RUBBLE, F&I, DITCH LINING	TN	10	$115.81	$1158.10
0530 3 5	RIPRAP- RUBBLE, COASTAL SHORE- LARGE BOULDERS	TN	10	$115.81	$1158.10
0530 74	BEDDING STONE	TN	10	$115.81	$1158.10
0536 1 0	GUARDRAIL -ROADWAY, GENERAL TL-2	LF	250	$22.14	$5535.00
0536 1 1	GUARDRAIL -ROADWAY, GENERAL TL-3	LF	250	$22.14	$5535.00
0536 1 3	GUARDRAIL ROADWAY, DOUBLE FACE	LF	250	$22.14	$5535.00
0536 1 11	GUARDRAIL, ROADWAY, MODIFIED THRIE BEAM	LF	250	$22.14	$5535.00
0536 1 12	GUARDRAIL ROADWAY, MODIFIED THRIE BEAM-DOUBLE FACE	LF	250	$22.14	$5535.00
0536 5 1	RUB RAIL FOR GUARDRAIL, SINGLE SIDED	LF	250	$22.14	$5535.00
0536 5 2	RUB RAIL FOR GUARDRAIL, DOUBLE SIDED	LF	250	$22.14	$5535.00
0536 7 1	SPECIAL GUARDRAIL POST- DEEP POST FOR SLOPE BREAK CONDITION-TIMBER OR STEEL	EA	5	$6,992.00	$34960.00

0536 7 2	SPECIAL GUARDRAIL POST- SPECIAL STEEL POST FOR CONCRETE STRUCTURE MOUNT	EA	5	$6,992.00	$34960.00
0536 7 3	SPECIAL GUARDRAIL POST- ENCASED POST FOR SHALLOW MOUNT	EA	5	$6,992.00	$34960.00
0536 7 4	SPECIAL GUARDRAIL POST- FRANGIBLE LEAVE-OUT FOR MOUNTING THROUGH CONCRETE SURFACE	EA	5	$6,992.00	$34960.00
0536 8 11	APPROACH TRANSITION TO RIGID BARRIER- BRIDGE ANCHORAGE ASSEMBLY CONNECTION, FURNISH & INSTALL	EA	5	$6,992.00	$34960.00
0536 8 12	APPROACH TRANSITION CONNECTION TO RIGID BARRIER, FURNISH AND INSTALL, TL-2	EA	5	$6,992.00	$34960.00
0536 8 13	APPROACH TRANSITION CONNECTION TO RIGID BARRIER, FURNISH AND INSTALL, TL-3	EA	5	$6,992.00	$34960.00
0536 8 40	APPROACH TRANSITION TO RIGID BARRIER- BRIDGE ANCHORAGE ASSEMBLY, RELOCATE	EA	5	$6,992.00	$34960.00
0536 8 60	APPROACH TRANSITION TO RIGID BARRIER- BRIDGE ANCHORAGE ASSEMBLY, REMOVE	EA	5	$6,992.00	$34960.00
0536 73	GUARDRAIL REMOVAL	LF	25	$22.14	$553.50
0536 85 22	GUARDRAIL END ANCHORAGE ASSEMBLY/END TREATMENT- FLARED	EA	2	$6,992.00	$13984.00
0536 85 24	GUARDRAIL END ANCHORAGE ASSEMBLY/END TREATMENT- PARALLEL	EA	2	$6,992.00	$13984.00
0536 85 25	GUARDRAIL END ANCHORAGE ASSEMBLY/END TREATMENT- TYPE II	EA	2	$6,992.00	$13984.00
0536 85 26	GUARDRAIL END ANCHORAGE ASSEMBLY/END TREATMENT- TYPE CRT	EA	2	$6,992.00	$13984.00
0536 85 27	GUARDRAIL END ANCHORAGE ASSEMBLY/END TREATMENT- DOUBLE FACE TERMINAL	EA	2	$6,992.00	$13984.00
0538 1	GUARDRAIL- RESET	LF	25	$22.14	$553.50
0539 80111	OPAQUE VISUAL BARRIER, F&I, CONCRETE, 2' 3"	LF	25	$22.14	$553.50
0544 74 40	RELOCATE CRASH CUSHION - ALL OPTIONS	EA	2	$6,992.00	$13984.00
0544 75 1	CRASH CUSHION	EA	2	$6,992.00	$13984.00
0546 71	RUMBLE STRIPS	PS	10		$0.00
0546 72 52	RUMBLE STRIPS, GROUND-IN, 16" CENTERLINE USED WITH RUMBLE STRIPE	GM	1	$10,602.00	$10602.00
0546 72 53	RUMBLE STRIPS, GROUND-IN, 8" EDGELINE USED WITH RUMBLE STRIPE	GM	1	$10,602.00	$10602.00
0546 72 55	RUMBLE STRIPS, GROUND-IN, 16" SHOULDER	GM	1	$10,602.00	$10602.00
0550 10110	FENCING, TYPE A, 0.0-5.0', STANDARD	LF	25	$22.14	$553.50
0550 10118	FENCING, TYPE A, 0.0-5.0', TYPE A STANDARD, RESET EXISTING	LF	25	$22.14	$553.50
0550 10119	FENCING, TYPE A, 0.0-5.0', SPECIAL FEATURES	LF	25	$22.14	$553.50
0550 10120	FENCING, TYPE A, 5.1-6.0, STANDARD	LF	25	$22.14	$553.50
0550 10128	FENCING, TYPE A, 5.1-6.0', RESET EXISTING	LF	25	$22.14	$553.50
0550 10130	FENCING, TYPE A, 6.1-7.0, STANDARD	LF	25	$22.14	$553.50

0550 10140	FENCING, TYPE A, 7.1-8.0', STANDARD	LF	25	$22.14	$553.50
0550 10148	FENCING, TYPE A, 7.1-8.0', RESET EXISTING	LF	25	$22.14	$553.50
0550 10149	FENCING, TYPE A, 7.1-8.0', SPECIAL FEATURES	LF	25	$22.14	$553.50
0550 10150	FENCING, TYPE A, 8.1-10.0', STANDARD	LF	25	$22.14	$553.50
0550 10158	FENCING, TYPE A, 8.1-10.0', RESET EXISTING	LF	25	$22.14	$553.50
0550 10159	FENCING, TYPE A, 8.1-10.0', SPECIAL FEATURES	LF	25	$22.14	$553.50
0550 10169	FENCING, TYPE A, 10.1-12.0', SPECIAL FEATURES	LF	25	$22.14	$553.50
0550 10210	FENCING, TYPE B, 0.0-5.0', STANDARD FEATURES	LF	25	$22.14	$553.50
0550 10212	FENCING, TYPE B, 0.5-5.0', W/ VINYL COATING	LF	25	$22.14	$553.50
0550 10218	FENCING, TYPE B, 0.0-5.0', RESET EXISTING	LF	25	$22.14	$553.50
0550 10219	FENCING, TYPE B, 0.0-5.0', SPECIAL FEATURES	LF	25	$22.14	$553.50
0550 10220	FENCING, TYPE B, 5.1-6.0', STANDARD	LF	25	$22.14	$553.50
0550 10221	FENCING, TYPE B, 5.1-6.0', W/ BARB WIRE ATTMT	LF	25	$22.14	$553.50
0550 10222	FENCING, TYPE B, 5.1-6.0, W/ VINYL COATING	LF	25	$22.14	$553.50
0550 10228	FENCING, TYPE B, 5.1-6.0, RESET EXISTING	LF	25	$22.14	$553.50
0550 10229	FENCING, TYPE B, 5.1-6.0, SPECIAL FEATURES	LF	25	$22.14	$553.50
0550 10230	FENCING, TYPE B, 6.1-7.0', STANDARD	LF	25	$22.14	$553.50
0550 10231	FENCING, TYPE B, 6.1-7.0, W/ BARB WIRE ATTMT	LF	25	$22.14	$553.50
0550 10232	FENCING, TYPE B, 6.1-7.0, W/ VINYL COATING	LF	25	$22.14	$553.50
0550 10238	FENCING, TYPE B, 6.1-7.0, RESET EXISTING	LF	25	$22.14	$553.50
0550 10240	FENCING, TYPE B, 7.1-8.0', STANDARD	LF	25	$22.14	$553.50
0550 10242	FENCING, TYPE B, 7.1-8.0', VINYL COATING	LF	25	$22.14	$553.50
0550 10248	FENCING, TYPE B, 7.1-8.0, RESET EXISTING	LF	25	$22.14	$553.50
0550 10250	FENCING, TYPE B, 8.1-10.0', STANDARD FEATURES	LF	25	$22.14	$553.50
0550 10251	FENCING, TYPE B, 8.1-10.0', WITH BARBED WIRE ATTMT	LF	25	$22.14	$553.50
0550 10252	FENCING, TYPE B, 8.1-10.0', VINYL COATING	LF	25	$22.14	$553.50
0550 10256	FENCING, TYPE B, 8-10.0', WITH VINYL COATING AND BARBED WIRE ATTACHMENT	LF	25	$22.14	$553.50
0550 10258	FENCING, TYPE B, 8.1-10.0', RESET EXISTING FENCE	LF	25	$22.14	$553.50

0550 10259	FENCING, TYPE B, 8.1-10.0', SPECIAL	LF	25	$22.14	$553.50
0550 10266	FENCING, TYPE B, 10.1-12.0', WITH VINYL COATING AND BARBED WIRE ATTACHMENT	LF	25	$22.14	$553.50
0550 10315	FENCING, TYPE R, 0-5.0', VERTICAL	LF	25	$22.14	$553.50
0550 10325	FENCING, TYPE R, 5.1-6.0', VERTICAL	LF	25	$22.14	$553.50
0550 10335	FENCING, TYPE R, 6.1-7.0', VERTICAL	LF	25	$22.14	$553.50
0550 10343	FENCING, TYPE R, 7.1-8.0, W/FULL ENCLOSURE	LF	25	$22.14	$553.50
0550 10344	FENCING, TYPE R, 7.1-8.0, W / PARTIAL ENCLOSURE	LF	25	$22.14	$553.50
0550 10353	FENCING, TYPE R, 8.1 - 10.0', WITH FULL ENCLOSURE	LF	25	$22.14	$553.50
0550 10354	FENCING, TYPE R, 8.1-10.0', WITH PARTIAL ENCLOSURE, TYPE R ONLY	LF	25	$22.14	$553.50
0550 10355	FENCING, TYPE R, 8.1-10.0', VERTICAL	LF	25	$22.14	$553.50
0550 10363	FENCING, TYPE R, GREATER THAN 10.0', WITH FULL ENCLOSURE	LF	25	$22.14	$553.50
0570 1 2	PERFORMANCE TURF, SOD	SY	1500	$7.91	$11865.00
0571 1 11	PLASTIC EROSION MAT, TURF REINFORCED MAT, TYPE 1	SY	100	$7.91	$791.00
0571 1 12	PLASTIC EROSION MAT, TRM, TYPE 2	SY	100	$7.91	$791.00
0571 1 13	PLASTIC EROSION MAT, TURF REINFORCED MAT, TYPE 3	SY	100	$7.91	$791.00
0591 1 2	4" LANDSCAPE SLEEVE (UNDERGROUND)	LF	50	$22.14	$1107.00
0591 1 2A	4" LANDSCAPE SLEEVE (BORED)	LF	50	$22.14	$1107.00
0630 2 11	CONDUIT, FURNISH & INSTALL, OPEN TRENCH	LF	1000	$22.14	$22140.00
0630 2 12	CONDUIT, FURNISH & INSTALL, DIRECTIONAL BORE	LF	1000	$22.14	$22140.00
0630 2 14	CONDUIT, FURNISH & INSTALL, ABOVEGROUND	LF	1000	$22.14	$22140.00
0630 2 15	CONDUIT, FURNISH & INSTALL, BRIDGE MOUNT	LF	100	$22.14	$2214.00
0630 2 65	CONDUIT, REMOVE, BRIDGE MOUNT	LF	100	$22.14	$2214.00
0654 001	RECTANGULAR RAPID FLASHING BEACON ASSEMBLY	EA	2	$6,992.00	$13984.00
0660 2101	LOOP ASSEMBLY- F&I, TYPE A	AS	20		$0.00
0660 2102	LOOP ASSEMBLY, F&I, TYPE B	AS	20		$0.00
0660 2103	LOOP ASSEMBLY, F&I, TYPE C	AS	20		$0.00
0660 2104	LOOP ASSEMBLY, F&I, TYPE D	AS	20		$0.00
0660 2105	LOOP ASSEMBLY, F&I, TYPE E	AS	20		$0.00

0660 2106	LOOP ASSEMBLY, F&I, TYPE F	AS	20		$0.00
0660 2107	LOOP ASSEMBLY, F&I, TYPE G	AS	20		$0.00
0660 3 11	VEHICLE DETECTION SYSTEM- MICROWAVE, FURNISH & INSTALL CABINET EQUIPMENT	EA	5		$0.00
0660 3 12	VEHICLE DETECTION SYSTEM- MICROWAVE, FURNISH & INSTALL, ABOVE GROUND EQUIPMENT	EA	5		$0.00
0700 1 11	SINGLE POST SIGN, F&I GROUND MOUNT, UP TO 12 SF	AS	50		$0.00
0700 1 12	SINGLE POST SIGN, F&I GROUND MOUNT, 12-20 SF	AS	20		$0.00
0700 1 13	SINGLE POST SIGN, F&I GROUND MOUNT, 21-30 SF	AS	5		$0.00
0700 1 14	SINGLE POST SIGN, F&I GROUND MOUNT, 31+ SF	AS	5		$0.00
0700 1 18	SINGLE POST SIGN, F&I GROUND MOUNT, IN-STREET FLEXIBLE POST	AS	5		$0.00
0700 1 21	SINGLE POST SIGN, F&I BARRIER MOUNT INDEX 11871 UP TO 12 SF	AS	5		$0.00
0700 1 22	SINGLE POST SIGN, F&I BARRIER MOUNT INDEX 11871 12-20 SF	AS	5		$0.00
0700 1 23	SINGLE POST SIGN, F&I BARRIER MOUNT INDEX 11871, 21-30 SF SHEETING AREA- BACK TO BACK	AS	5		$0.00
0700 1 31	SINGLE POST SIGN, F&I BRIDGE MOUNT INDEX 11870, UP TO 12 SF	AS	5		$0.00
0700 1 32	SINGLE POST SIGN, F&I BRIDGE MOUNT INDEX 11870, 12-20 SF	AS	5		$0.00
0700 1 33	SINGLE POST SIGN, F&I BRIDGE MOUNT INDEX 11870, 21-30 SF	AS	5		$0.00
0700 1 40	SINGLE POST SIGN, INSTALL	AS	5		$0.00
0700 1 50	SINGLE POST SIGN, RELOCATE	AS	10		$0.00
0700 1 60	SINGLE POST SIGN, REMOVE	AS	50		$0.00
0700 1 74	SINGLE POST SIGN, F&I CUSTOM, 31+ SF	AS	5		$0.00
0700 2 11	MULTI- POST SIGN, F&I GROUND MOUNT, UP TO 12 SF	AS	5		$0.00
0700 2 12	MULTI- POST SIGN, F&I GROUND MOUNT, 12-20 SF	AS	5		$0.00
0700 2 13	MULTI- POST SIGN, F&I GROUND MOUNT, 21-30 SF	AS	5		$0.00
0700 2 14	MULTI- POST SIGN, F&I GROUND MOUNT, 31-50 SF	AS	5		$0.00
0700 2 15	MULTI- POST SIGN, F&I GROUND MOUNT, 51-100 SF	AS	5		$0.00
0700 2 16	MULTI- POST SIGN, F&I GROUND MOUNT, 101-200 SF	AS	5		$0.00
0700 2 40	MULTI- POST SIGN, INSTALL	AS	5		$0.00
0700 2 50	MULTI- POST SIGN, F&I GROUND MOUNT, RELOCATE	AS	5		$0.00
0700 2 60	MULTI- POST SIGN, F&I GROUND MOUNT, REMOVE	AS	5		$0.00

0700 2 80	MULTI- POST SIGN, F&I GROUND MOUNT, REPAIR	AS	5		$0.00
0700 3101	SIGN PANEL, FURNISH & INSTALL GROUND MOUNT, UP TO 12 SF	EA	5		$0.00
0700 3102	SIGN PANEL, FURNISH & INSTALL GROUND MOUNT, 12-20 SF	EA	5		$0.00
0700 3103	SIGN PANEL, FURNISH & INSTALL GROUND MOUNT, 21-30 SF	EA	5		$0.00
0700 3104	SIGN PANEL, FURNISH & INSTALL GROUND MOUNT, 31-50 SF	EA	5		$0.00
0700 3105	SIGN PANEL, FURNISH & INSTALL GROUND MOUNT, 51-100 SF	EA	5		$0.00
0700 3106	SIGN PANEL, FURNISH & INSTALL GROUND MOUNT, 101-200 SF	EA	5		$0.00
0700 3201	SIGN PANEL, FURNISH & INSTALL OVERHEAD MOUNT, UP TO 12 SF	EA	5		$0.00
0700 3202	SIGN PANEL, FURNISH & INSTALL OVERHEAD MOUNT, 12-20 SF	EA	5		$0.00
0700 3203	SIGN PANEL, FURNISH & INSTALL OVERHEAD MOUNT, 21-30 SF	EA	5		$0.00
0700 3204	SIGN PANEL, FURNISH & INSTALL OVERHEAD MOUNT, 31-50 SF	EA	5		$0.00
0700 3205	SIGN PANEL, FURNISH & INSTALL OVERHEAD MOUNT, 51-100 SF	EA	5		$0.00
0700 3206	SIGN PANEL, FURNISH & INSTALL OVERHEAD MOUNT, 101-200 SF	EA	5		$0.00
0700 3401	SIGN PANEL, INSTALL, UP TO 12 SF	EA	5		$0.00
0700 3402	SIGN PANEL, INSTALL, 12-20 SF	EA	5		$0.00
0700 3403	SIGN PANEL, INSTALL, 21-30 SF,	EA	5		$0.00
0700 3404	SIGN PANEL, INSTALL, 31-50 SF	EA	5		$0.00
0700 3405	SIGN PANEL, INSTALL, 51-100 SF,	EA	5		$0.00
0700 3406	SIGN PANEL, INSTALL, 101-200 SF	EA	5		$0.00
0700 3501	SIGN PANEL, RELOCATE, UP TO 12 SF	EA	5		$0.00
0700 3502	SIGN PANEL, RELOCATE, 12-20 SF	EA	5		$0.00
0700 3503	SIGN PANEL, RELOCATE, 21-30 SF	EA	5		$0.00
0700 3504	SIGN PANEL, RELOCATE, 31-50 SF	EA	5		$0.00
0700 3505	SIGN PANEL, RELOCATE, 51-100 SF	EA	5		$0.00
0700 3506	SIGN PANEL, RELOCATE, 101-200 SF	EA	5		$0.00
0700 3601	SIGN PANEL, REMOVE, UP TO 12 SF	EA	5		$0.00
0700 3602	SIGN PANEL, REMOVE, 12-20 SF	EA	5		$0.00
0700 3603	SIGN PANEL, REMOVE, 21-30 SF	EA	5		$0.00

0700 3604	SIGN PANEL, REMOVE, 31-50 SF	EA	5		$0.00
0700 3605	SIGN PANEL, REMOVE, 51-100 SF	EA	5		$0.00
0700 3606	SIGN PANEL, REMOVE, 101-200 SF	EA	5		$0.00
0700 3624	SIGN PANEL, REMOVE, UP TO 50 SF WITH LIGHTING	EA	5		$0.00
0700 3625	SIGN PANEL, REMOVE, 51-100 SF WITH LIGHTING	EA	5		$0.00
0700 3626	SIGN PANEL, REMOVE, 101-200 SF WITH LIGHTING	EA	5		$0.00
0700 12 11	SIGN BEACON, F&I GROUND MOUNT- AC POWERED, ONE BEACON	AS	5		$0.00
0700 12 12	SIGN BEACON, F&I GROUND MOUNT- AC POWERED, TWO BEACONS	AS	5		$0.00
0700 12 21	SIGN BEACON, F&I GROUND MOUNT- SOLAR POWERED, ONE BEACON	AS	5		$0.00
0700 12 22	SIGN BEACON, F&I GROUND MOUNT- SOLAR POWERED, TWO BEACONS	AS	5		$0.00
0700 12 31	SIGN BEACON, F&I OVERHEAD MOUNT, ONE BEACON	AS	5		$0.00
0700 12 32	SIGN BEACON, F&I OVERHEAD MOUNT, TWO BEACONS	AS	5		$0.00
0700 12 50	SIGN BEACON, RELOCATE BEACON- SIGN TO REMAIN	AS	5		$0.00
0700 12 60	SIGN BEACON, REMOVE BEACON- SIGN TO REMAIN	AS	5		$0.00
0700 13 10	RETROREFLECTIVE SIGN STRIP- BACK OF RAIL ROAD CROSSBUCK SIGN BLADES	EA	5		$0.00
0700 13 12	RETROREFLECTIVE SIGN STRIP- FURNISH AND INSTALL, 2'	EA	5		$0.00
0700 13 15	RETROREFLECTIVE SIGN STRIP- FURNISH AND INSTALL, 5'	EA	5		$0.00
0701 17101	PROFILED THERMOPLASTIC,STANDARD- CONCRETE SURFACES, WHITE, SOLID,6"	GM	1		$0.00
0701 17201	PROFILED THERMOPLASTIC,STANDARD- CONCRETE SURFACES, YELLOW, SOLID,6"	GM	1		$0.00
0701 17221	PROFILED THERMOPLASTIC,STANDARD- CONCRETE SURFACES, YELLOW, SKIP,6"	GM	1		$0.00
0701 18101	PROFILED THERMOPLASTIC,STANDARD- ASPHALT SURFACES, WHITE, SOLID,6"	GM	1		$0.00
0701 18201	PROFILED THERMOPLASTIC,STANDARD- ASPHALT SURFACES, YELLOW, SOLID,6"	GM	1		$0.00
0701 18221	PROFILED THERMOPLASTIC,STANDARD- ASPHALT SURFACES, YELLOW, SKIP,6"	GM	1		$0.00
0705 10 1	OBJECT MARKER, TYPE 1	EA	5		$0.00
0705 10 2	OBJECT MARKER, TYPE 2	EA	5		$0.00
0705 10 3	OBJECT MARKER, TYPE 3	EA	5		$0.00
0705 10 4	OBJECT MARKER, TYPE 4	EA	5		$0.00
0705 11 1	DELINEATOR, FLEXIBLE TUBULAR	EA	50		$0.00

0705 11 2	DELINEATOR, NON-FLEXIBLE	EA	5		$0.00
0705 11 3	DELINEATOR, FLEXIBLE HIGH VISABILITY MEDIAN	EA	5		$0.00
0705 11 4	DELINEATOR, FLEXIBLE HIGH PERFORMANCE	EA	5		$0.00
0706 1 3	RAISED PAVEMENT MARKER, TYPE B	EA	200		$0.00
0710 90	PAINTED PAVEMENT MARKINGS, FINAL SURFACE	LS	5		$0.00
0710 11101	PAINTED PAVEMENT MARKINGS, STANDARD, WHITE, SOLID, 6"	GM	1		$0.00
0710 11102	PAINTED PAVEMENT MARKINGS, STANDARD, WHITE, SOLID FOR INTERCHANGE AND URBAN ISLAND, 8"	GM	1		$0.00
0710 11103	PAINTED PAVEMENT MARKINGS, STANDARD, WHITE, SOLID FOR INTERCHANGE MARKINGS, 12"	GM	1		$0.00
0710 11123	PAINTED PAVEMENT MARKINGS, STANDARD, WHITE, SOLID, 12"	LF	3000		$0.00
0710 11124	PAINTED PAVEMENT MARKINGS, STANDARD, WHITE, SOLID, 18"	LF	2000		$0.00
0710 11125	PAINTED PAVEMENT MARKINGS, STANDARD, WHITE, SOLID, 24"	LF	2000		$0.00
0710 11131	PAINTED PAVEMENT MARKINGS, STANDARD, WHITE, SKIP, 10-30 OR 3-9 SKIP, 6" WIDE	GM	1		$0.00
0710 11133	PAINTED PAVEMENT MARKING, STANDARD,WHITE, 3'-9' SKIP DROP LINE AND APPROACH TO TOLL PLAZA, 12" WIDE,	GM	1		$0.00
0710 11141	PAINTED PAVEMENT MARKINGS, STANDARD, WHITE, 2-4 DOTTED GUIDELINE/ 6-10 DOTTED EXTENSION, 6"	GM	1		$0.00
0710 11160	PAINTED PAVEMENT MARKINGS, STANDARD, WHITE, MESSAGE	EA	25		$0.00
0710 11170	PAINTED PAVEMENT MARKINGS, STANDARD, WHITE, ARROWS	EA	25		$0.00
0710 11180	PAINTED PAVEMENT MARKINGS, STANDARD, WHITE, YIELD LINE	LF	500		$0.00
0710 11190	PAINTED PAVEMENT MARKINGS, STANDARD, WHITE, ISLAND NOSE	SF	100		$0.00
0710 11201	PAINTED PAVEMENT MARKINGS, STANDARD, YELLOW, SOLID, 6"	GM	1		$0.00
0710 11202	PAINTED PAVEMENT MARKINGS, STANDARD, YELLOW, SOLID FOR INTERCHANGE AND URBAN ISLAND, 8"	GM	1		$0.00
0710 11203	PAINTED PAVEMENT MARKINGS, STANDARD, YELLOW, SOLID, 12"	GM	1		$0.00
0710 11223	PAINTED PAVEMENT MARKINGS, STANDARD, YELLOW, SOLID, 12"	LF	100		$0.00
0710 11224	PAINTED PAVEMENT MARKINGS, STANDARD, YELLOW, SOLID, 18"	LF	300		$0.00
0710 11225	PAINTED PAVEMENT MARKINGS, STANDARD, YELLOW, SOLID, 24"	LF	100		$0.00
0710 11231	PAINTED PAVEMENT MARKINGS, STANDARD, YELLOW, SKIP, 6"	GM	1		$0.00
0710 11241	PAINTED PAVEMENT MARKINGS, STANDARD, YELLOW, 2-4 DOTTED GUIDELINE/6-10 DOTTED EXTENSION, 6"	GM	1		$0.00
0710 11290	PAINTED PAVEMENT MARKINGS, STANDARD, YELLOW, ISLAND NOSE	SF	100		$0.00
0710 11331	PAINTED PAVEMENT MARKINGS, STANDARD,BLACK, SKIP, 6"	GM	1		$0.00

0710 11333	PAINTED PAVEMENT MARKING, STANDARD, BLACK, 3'-9' DOTTED LANE DROP AND APPROACH TO TOLL PLAZA, 12"	GM	1		$0.00
0710 11341	PAINTED PAVEMENT MARKINGS, STANDARD, BLACK, 2-4 DOTTED GUIDELINE/ 6-10 DOTTED EXTENSION, 6"	GM	1		$0.00
0710 11421	PAINTED PAVEMENT MARKINGS, STANDARD, BLUE, SOLID FOR PARKING LOT- ACCESSIBLE MARKINGS, 6"	LF	100		$0.00
0710 12231	PAINTED PAVEMENT MARKINGS, DURABLE, YELLOW, SKIP, 6"	GM	1		$0.00
0710 12421	PAINTED PAVEMENT MARKINGS, DURABLE, BLUE, SOLID FOR PARKING LOT-ACCESSIBLE MARKINGS, 6"	LF	100		$0.00
0711 11102	THERMOPLASTIC, STANDARD, WHITE, SOLID, 8" FOR INTERCHANGE AND URBAN ISLAND	GM	1		$0.00
0711 11103	THERMOPLASTIC, STANDARD, WHITE, SOLID, 12" FOR INTERCHANGE MARKINGS	GM	1		$0.00
0711 11123	THERMOPLASTIC, STANDARD, WHITE, SOLID, 12" FOR CROSSWALK AND ROUNDABOUT	LF	2500		$0.00
0711 11124	THERMOPLASTIC, STANDARD, WHITE, SOLID, 18" FOR DIAGONALS AND CHEVRONS	LF	500		$0.00
0711 11125	THERMOPLASTIC, STANDARD, WHITE, SOLID, 24" FOR STOP LINE AND CROSSWALK	LF	1500		$0.00
0711 11130	THERMOPLASTIC, STANDARD, WHITE, VERTICAL DEFLECTION MARKING	EA	10		$0.00
0711 11140	THERMOPLASTIC, STANDARD, WHITE, VERTICAL DEFLECTION ADVANCED WARNING MARKING	EA	10		$0.00
0711 11141	THERMOPLASTIC, STANDARD, WHITE, 2-4 DOTTED GUIDELINE/ 6-10 GAP EXTENSION, 6"	GM	1		$0.00
0711 11143	THERMOPLASTIC, STANDARD, WHITE, 2-4 DOTTED GUIDELINE, 12" FOR ROUNDABOUT	GM	1		$0.00
0711 11160	THERMOPLASTIC, STANDARD, WHITE, MESSAGE OR SYMBOL	EA	20		$0.00
0711 11170	THERMOPLASTIC, STANDARD, WHITE, ARROW	EA	20		$0.00
0711 11180	THERMOPLASTIC, STANDARD, WHITE, YIELD LINE	LF	250		$0.00
0711 11224	THERMOPLASTIC, STANDARD, YELLOW, SOLID, 18" FOR DIAGONAL OR CHEVRON	LF	250		$0.00
0711 11241	THERMOPLASTIC, STANDARD, YELLOW, 2-4 DOTTED GUIDE LINE /6-10 DOTTED EXTENSION LINE, 6"	GM	1		$0.00
0711 11421	THERMOPLASTIC, STANDARD, BLUE, SOLID,6"	LF	100		$0.00
0711 14123	THERMOPLASTIC, PREFORMED, WHITE, SOLID, 12"	LF	1000		$0.00
0711 14125	THERMOPLASTIC, PREFORMED, WHITE, SOLID, 24"	LF	1000		$0.00
0711 14141	THERMOPLASTIC, PREFORMED, WHITE, 2-4 DOTTED GUIDELINE ON CONCRETE SURFACES	GM	1		$0.00
0711 14160	THERMOPLASTIC, PREFORMED, WHITE, MESSAGE	EA	5		$0.00
0711 14170	THERMOPLASTIC, PREFORMED, WHITE, ARROWS	EA	20		$0.00
0711 14191	THERMOPLASTIC, PREFORMED, 6" WHITE, RAILROAD DYNAMIC ENVELOPE	LF	100		$0.00
0711 14193	THERMOPLASTIC, PREFORMED, 12" WHITE ON ASPHALT PAVEMENT, RAILROAD DYNAMIC ENVELOPE	LF	250		$0.00
0711 14194	THERMOPLASTIC, PREFORMED, 12" WHITE WITH 4" OUTSIDE BLACK CONTRAST ON CONCRETE PAVEMENT, RAILROAD DYNAMIC ENVELOPE	LF	100		$0.00

0711 14341	THERMOPLASTIC, PREFORMED, BLACK, 2-4 DOTTED GUIDELINE ON CONCRETE SURFACES	GM	1		$0.00
0711 14560	THERMOPLASTIC, PREFORMED, WHITE WITH BLACK CONTRAST ON CONCRETE PAVEMENT, MESSAGE OR SYMBOL	EA	5		$0.00
0711 14570	THERMOPLASTIC, PREFORMED, WHITE WITH BLACK CONTRAST, ARROW ON CONCRETE SURFACE	EA	5		$0.00
0711 15101	THERMOPLASTIC, STANDARD-OPEN GRADED ASPHALT SURFACES WHITE, SOLID, 6"	GM	1		$0.00
0711 15102	THERMOPLASTIC, STANDARD-OPEN GRADED ASPHALT SURFACES, WHITE, SOLID, 8"	GM	1		$0.00
0711 15131	THERMOPLASTIC, STANDARD-OPEN GRADED ASPHALT SURFACES, WHITE, SKIP, 6",10-30 SKIP OR 3-9 LANE DROP	GM	1		$0.00
0711 15133	THERMOPLASTIC, STANDARD-OPEN GRADED ASPHALT SURFACES, WHITE, SKIP, 12"- APPROACH TO TOLL PLAZA OR 3-9 LANE DROP	GM	1		$0.00
0711 15201	THERMOPLASTIC, STANDARD-OPEN GRADED ASPHALT SURFACES, YELLOW, SOLID, 6"	GM	1		$0.00
0711 15202	THERMOPLASTIC, STANDARD-OPEN GRADED ASPHALT SURFACES YELLOW, SOLID, 8"	GM	1		$0.00
0711 15231	THERMOPLASTIC, STANDARD-OPEN GRADED ASPHALT SURFACES, YELLOW, SKIP, 6"	GM	1		$0.00
0711 16101	THERMOPLASTIC, STANDARD-OTHER SURFACES, WHITE, SOLID, 6"	GM	3		$0.00
0711 16102	THERMOPLASTIC, STANDARD-OTHER SURFACES, WHITE, SOLID, 8"	GM	1		$0.00
0711 16131	THERMOPLASTIC, OTHER SURFACES, WHITE, SKIP, 6",10-30 SKIP OR 3-9 LANE DROP	GM	1		$0.00
0711 16133	THERMOPLASTIC, STANDARD-OTHER SURFACES WHITE, SKIP, 12"- APPROACH TO TOLL PLAZA OR 3-9 LANE DROP	GM	1		$0.00
0711 16201	THERMOPLASTIC, STANDARD-OTHER SURFACES, YELLOW, SOLID, 6"	GM	3		$0.00
0711 16202	THERMOPLASTIC, STANDARD-OTHER SURFACES, YELLOW, SOLID, 8"	GM	1		$0.00
0711 16231	THERMOPLASTIC, STANDARD-OTHER SURFACES, YELLOW, SKIP, 6"	GM	1		$0.00
0711 17	THERMOPLASTIC, REMOVE EXISTING THERMOPLASTIC PAVEMENT MARKINGS: NON-CONFLICTING ONLY	SF	500		$0.00
0711 12131	THERMOPLASTIC, REFURBISHMENT, WHITE, SKIP, 6"	GM	1		$0.00
0711 12160	THERMOPLASTIC, REFURBISH, WHITE, MESSAGE	EA	5		$0.00
0711 12170	THERMOPLASTIC, REFURBISH, WHITE, ARROWS	EA	5		$0.00
0711 12231	THERMOPLASTIC, REFURBISHMENT, YELLOW, SKIP, 6"	GM	1		$0.00
713103101	PERMANENT TAPE, WHITE, SOLID, 6" FOR CONCRETE BRIDGES	GM	1		$0.00
713103102	PERMANENT TAPE, WHITE, SOLID, 8" EXIT LANE AT INTERCHANGE ON CONCRETE PAVEMENT	GM	1		$0.00
713103103	PERMANENT TAPE, WHITE, SOLID DROP LANE MARKING, 12" FOR CONCRETE BRIDGES,	GM	1		$0.00
713103131	PERMANENT TAPE, WHITE, SKIP/DOTTED, 6" FOR CONCRETE SURFACES	GM	1		$0.00
713103133	PERMANENT TAPE, WHITE, SKIP, 12" WIDE 3'-9' DROP LANE ON CONCRETE SURFACES	GM	1		$0.00
713103201	PERMANENT TAPE, YELLOW, SOLID, 6" FOR CONCRETE BRIDGES	GM	1		$0.00

713103231	PERMANENT TAPE, YELLOW, 10-30 SKIP/ 3-9 DOTTED, 6" FOR CONCRETE SURFACES	GM	1		$0.00
713103331	PERMANENT TAPE, BLACK, SKIP/DOTTED, 6" FOR CONCRETE SURFACES	GM	1		$0.00
713103333	PERMANENT TAPE, BLACK, 3'-9' DROP LANE, 12" ON CONCRETE SURFACES	GM	1		$0.00
713107	PREFORMED/PERMANENT TAPE, REMOVE	SF	50		$0.00
400143	CLEANING & COATING CONCRETE SURFACE, CLASS 5	SF	5	$6.55	$32.75
906-173-7	SINGLE COMPONENT POLYURETHANE INJECTION	GAL	500		$0.00
906-173-8	TWO COMPONENT POLYURETHANE INJECTION	LB	10000	$1.32	$13200.00
MISCELLANEOUS LABOR, EQUIPMENT, MATERIAL, AND SUB-CONTRACTOR ITEMS					
	LABOR - FOREMAN	HR	1	$78.33	$78.33
	LABOR - OPERATOR	HR	1	$78.33	$78.33
	LABOR - TRUCK DRIVER	HR	1	$78.33	$78.33
	LABOR - PIPE LAYERS (FOR PIPES < 48" DIA.)	HR	1	$78.33	$78.33
	LABOR - LABORER	HR	1	$78.33	$78.33
	EQUIPMENT - FOREMAN P/U WITH HAND TOOLS	HR	1	$78.33	$78.33
	EQUIPMENT - JOB TRUCK WITH MANDATORY TOOLS*	HR	1	$78.33	$78.33
	EQUIPMENT - CRANE (20 TON)	HR	1	$78.33	$78.33
	EQUIPMENT - CRANE (60 TON)	HR	1	$78.33	$78.33
	EQUIPMENT - TRACTOR & TRAILER (TRANSPORT)	HR	1	$78.33	$78.33
	EQUIPMENT - TRACK HOE (TO 100 HP)	HR	1	$78.33	$78.33
	EQUIPMENT - TRACK HOE (101 HP TO 170 HP)	HR	1	$78.33	$78.33
	EQUIPMENT - RUBBER TIRED BACKHOE	HR	1	$78.33	$78.33
	EQUIPMENT - WHEEL LOADER (TO 150 HP)	HR	1	$78.33	$78.33
	EQUIPMENT - WHEEL LOADER (151 HP AND UP)	HR	1	$78.33	$78.33
	EQUIPMENT - TRACK TYPE TRACTORS (TO 100 HP)	HR	1	$78.33	$78.33
	EQUIPMENT - TRACK TYPE TRACTORS (101 HP AND UP)	HR	1	$78.33	$78.33
	EQUIPMENT - DUMP TRUCK (TANDEM AXLE)	HR	1	$78.33	$78.33
	EQUIPMENT - PLATE TAMP	HR	1	$78.33	$78.33
	EQUIPMENT - 3" TRASH PUMP	HR	1	$78.33	$78.33
	EQUIPMENT - 4" DOUBLE DIAPHRAGM PUMP	HR	1	$78.33	$78.33
	EQUIPMENT - AIR COMPRESSOR (125 SCFM)	HR	1	$78.33	$78.33
	EQUIPMENT - WELL POINT PUMP	HR	1	$78.33	$78.33
	EQUIPMENT - 4" JET PUMP	HR	1	$78.33	$78.33
	MATERIAL - 2500 PSI CONCRETE (UN-FORMED)	CY	1		$0.00
	MATERIAL - OFF SITE SELECT FILL	CY	1	$14.50	$14.50
	MATERIAL - LIMEROCK BASE MATERIAL	TN	1	$115.81	$115.81

	MATERIAL - #57 WASHED STONE	TN	1	$115.81	$115.81
	MATERIAL - ASPHALT PAVING (1.5" THICK; TYPE S-3)	SY	1	$7.91	$7.91
	MATERIAL - BAHIA SOD	SY	1	$7.91	$7.91
	SUB-CONTRACTOR - WELDER WITH TRUCK	HR	1		$0.00
	SUB-CONTRACTOR - TRACTOR WITH 7' BUSH HOG	HR	1		$0.00

* Contractor Job Truck Mandatory Tools

	Tool	Minimum size	Quantity
1	Air compressor	20 CFM @ 90PSI	1
2	3/4" drive ratchet and socket set		1
3	1 inch drive air impact wrench		1
4	1 inch drive sockets	1-1/2" to 3"	1 each
5	Slug wrenches	1-1/2" to 3"	1
6	End wrenches	7/16" to 1-1/2"	2 each
7	Porta band saw w spare blades	4" opening	1
8	Sawzall w spare blades		1
9	Nylon slings 5,000 and 10,000 pound rated (vertical)	2" 2 ply/4" 2 ply	2 each
10	Grade 80 Chain 10,000 pound rated	1/2" X 10 ft	2
11	Clevis or Shackles 5 ton rated	5/8" alloy	4
12	Porta power 10 ton		1
13	Shovels- round and square point		3 each
14	Cutting torch set *see note*		1
15	Gas or diesel stick welder and accessories *see note*		1
16	Small diaphragm pump and accessories	2" suction	1
17	Tap and die set	1/2" to 2" NPT	1
18	Drill and bits for steel or ductile	1/2" to 2" NPT size	1 set
19	Pry bar	5 foot	1
20	Come along	2ton	2
21	Circular Saw and blades for cribbing/forms	7 1/2 inch	2
22	Generator 120/240 volt	3500 watt	1
23	Framing hammer and nails for forms		2
24	Screw gun and screws for forms and cribbing		1
25	Gas powered cutoff saw (K-12)	12inch	1
26	Chain saw for cribbing and for'ms	14 inch bar	1
27	Sledge hammers	4t/ and 6tl	1 each
28	Crew PPE to include Hard hat and gloves at minimum	as needed	per person

EXHIBIT "D"

Conditional Federal/Grant-Funded Contract Addendum

(Place Conditional Federal/Grant-Funded Contract Addendum behind this page)

EXHIBIT "D"
CONDITIONAL FEDERAL/GRANT-FUNDED CONTRACT ADDENDUM

1. Applicability

1.1 This Exhibit applies only if activated under Section 25 of the Agreement or under a Task Order. If not activated, this Exhibit is reserved and has no operative effect.
1.2 If activated, this Exhibit supplements the Agreement and applies to the federally funded or grant-funded Work only. Contractor shall comply with all applicable requirements of the federal award, grant agreement, pass-through entity, program rules, and applicable law.
1.3 The City may provide additional award-specific clauses, certifications, forms, wage determinations, reporting requirements, or flow-down provisions. Contractor shall comply with such requirements as a condition of performing the affected Work and receiving payment from the applicable funding source.

2. Federal Award and Grant Information

Federal/Grant Program: [insert]
Federal Awarding Agency: [insert]
Pass-Through Entity: [insert, if applicable]
Assistance Listing Number: [insert, if applicable]
Federal Award Identification Number: [insert, if applicable]
Award or Disaster Declaration Date: [insert, if applicable]
Project Number: [insert]
Special Award Conditions: [insert or attach]

3. Remedies for Breach

For contracts exceeding the simplified acquisition threshold, Contractor acknowledges that the City may exercise all administrative, contractual, legal, and equitable remedies available under the Contract Documents and applicable law if Contractor violates or breaches contract terms. Remedies may include withholding payment, requiring correction, suspension of Work, termination, procurement from alternate sources, damages, sanctions, and any other appropriate remedy.

4. Termination for Cause and Convenience

For contracts in excess of $10,000, the City may terminate the federally funded or grant-funded Work for cause or convenience as provided in the Agreement. The notice of termination will identify the effective date and the manner of termination. Contractor shall be paid only for authorized Work satisfactorily performed before the effective date of termination, subject to documentation, offsets, allowable cost requirements, and applicable grant rules.

5. Equal Employment Opportunity

Except as otherwise provided under 41 C.F.R. Part 60, if the Work is a federally assisted construction contract as defined in 41 C.F.R. § 60-1.3, Contractor shall comply with the equal opportunity clause in 41 C.F.R. § 60-1.4(b), which is incorporated by reference as if fully set forth

RESERVED

herein, and shall include the required clause in covered subcontracts and purchase orders.

6. Davis-Bacon Act and Copeland Anti-Kickback Act

When required by federal program legislation, all prime construction contracts in excess of $2,000 must include compliance with the Davis-Bacon Act, 40 U.S.C. §§ 3141-3148, as supplemented by Department of Labor regulations at 29 C.F.R. Part 5. If Davis-Bacon applies, Contractor shall pay laborers and mechanics at rates not less than the applicable wage determination, pay wages not less than once per week, submit certified payrolls if required, and comply with all applicable labor standards.
If Davis-Bacon applies, Contractor shall also comply with the Copeland "Anti-Kickback" Act, 40 U.S.C. § 3145, as supplemented by 29 C.F.R. Part 3, and shall not induce any person employed in the construction, completion, or repair of public work to give up any part of compensation to which the person is entitled. Contractor shall report suspected or reported violations to the City.

7. Contract Work Hours and Safety Standards Act

Where applicable, for contracts in excess of $100,000 that involve the employment of mechanics or laborers, Contractor shall comply with 40 U.S.C. §§ 3702 and 3704, as supplemented by Department of Labor regulations at 29 C.F.R. Part 5. Contractor shall compute wages based on a standard 40-hour workweek and shall compensate covered workers at not less than one and one-half times the basic rate of pay for hours worked in excess of 40 hours in a workweek. No laborer or mechanic shall be required to work under unsanitary, hazardous, or dangerous conditions. These requirements do not apply to purchases of supplies, materials, or articles ordinarily available on the open market, or to contracts for transportation or transmission of intelligence.

8. Rights to Inventions

If the federal award meets the definition of "funding agreement" under 37 C.F.R. § 401.2(a), and the Work involves substitution of parties, assignment, or performance of experimental, developmental, or research work under that funding agreement, Contractor shall comply with 37 C.F.R. Part 401 and any implementing regulations issued by the awarding agency.

9. Clean Air Act and Federal Water Pollution Control Act

For contracts and subgrants exceeding $150,000, Contractor shall comply with all applicable standards, orders, and regulations issued pursuant to the Clean Air Act, 42 U.S.C. §§ 7401-7671q, and the Federal Water Pollution Control Act, 33 U.S.C. §§ 1251-1387. Contractor shall report each violation to the City, and the City will report violations as required to the federal awarding agency and the appropriate EPA regional office. Contractor shall include these requirements in each covered subcontract exceeding $150,000.

10. Debarment and Suspension

Contractor shall comply with Executive Orders 12549 and 12689 and 2 C.F.R. Part 180. Contractor shall not enter into covered transactions with parties listed on the governmentwide exclusions in the System for Award Management. Contractor shall verify that Contractor, its principals, and its affiliates are not excluded or disqualified and shall include this requirement in lower-tier covered

RESERVED

transactions.

11. Byrd Anti-Lobbying Amendment

For awards exceeding $100,000, Contractor shall comply with the Byrd Anti-Lobbying Amendment, 31 U.S.C. § 1352. Contractor shall certify that it has not and will not use federal appropriated funds to pay any person or organization for influencing or attempting to influence an officer or employee of an agency, a member of Congress, an officer or employee of Congress, or an employee of a member of Congress in connection with obtaining a federal contract, grant, or other covered award. Contractor shall disclose lobbying with non-federal funds as required and shall require each lower tier to make the same certification and disclosure.

12. Procurement of Recovered Materials

Contractor shall comply with 2 C.F.R. § 200.323 and Section 6002 of the Solid Waste Disposal Act, as amended by the Resource Conservation and Recovery Act, to the extent applicable. Contractor shall procure designated items containing the highest percentage of recovered materials practicable, consistent with competition and performance requirements, when the purchase price exceeds the applicable threshold or the value of the quantity acquired during the preceding fiscal year exceeded the applicable threshold. Contractor shall also procure solid waste management services in a manner that maximizes energy and resource recovery and shall support the City's affirmative procurement program where applicable.

13. Domestic Preferences for Procurements

As appropriate and to the extent consistent with law, Contractor shall comply with 2 C.F.R. § 200.322 by providing a preference for the purchase, acquisition, or use of goods, products, or materials produced in the United States, including iron, aluminum, steel, cement, and other manufactured products, when the Work is performed under a federal award.

14. Prohibition on Certain Telecommunications and Video Surveillance Equipment or Services

Contractor shall comply with 2 C.F.R. § 200.216 and shall not obligate or expend federal funds to procure, obtain, extend, renew, or enter into a contract to procure or obtain covered telecommunications equipment or services as a substantial or essential component of any system or as critical technology as part of any system. Contractor shall include this prohibition in applicable subcontracts and purchase orders.

15. Build America, Buy America

If the Work is an infrastructure project funded by a federal financial assistance program subject to the Build America, Buy America Act, Contractor shall comply with all applicable domestic content procurement preference requirements for iron, steel, manufactured products, and construction materials permanently incorporated into the project, unless a waiver applies. Contractor shall provide certifications, documentation, and product information required by the City, funding agency, or pass-through entity.

16. Small and Minority Businesses, Women's Business Enterprises, Veteran-Owned Businesses,

RESERVED

and Labor Surplus Area Firms

Contractor shall take the affirmative steps required by 2 C.F.R. § 200.321 to assure that small businesses, minority businesses, women's business enterprises, veteran-owned businesses, and labor surplus area firms are used when possible, including, as applicable, placing such businesses on solicitation lists, soliciting them when they are potential sources, dividing requirements when economically feasible, establishing delivery schedules that encourage participation, using appropriate assistance organizations, and requiring subcontractors to take the same affirmative steps.

17. Bonding Requirements for Federal Construction or Facility Improvement Contracts

For construction or facility improvement contracts or subcontracts exceeding the simplified acquisition threshold, Contractor shall comply with the bonding requirements in 2 C.F.R. § 200.326 when the federal award requires such bonding, including bid guarantee, performance bond, and payment bond requirements unless the federal agency or pass-through entity determines that the City's bonding policy and requirements adequately protect the federal interest.

18. Access to Records; Retention

Contractor shall provide the City, the federal awarding agency, the pass-through entity, the Comptroller General of the United States, and their authorized representatives access to any documents, papers, records, and other materials that are directly pertinent to the federal or grant-funded Work for the purpose of making audits, examinations, excerpts, and transcriptions. Contractor shall retain records for the period required by 2 C.F.R. Part 200, the award terms, the Agreement, and applicable law, whichever is longer.

19. No Obligation by Federal Government

The federal government is not a party to this Agreement or any Task Order and is not subject to any obligations or liabilities to the City, Contractor, or any other party arising from the Agreement or Work.

20. Program Fraud and False or Fraudulent Statements

Contractor acknowledges that 31 U.S.C. Chapter 38 and other federal laws concerning fraud, false claims, and false statements may apply to Contractor's actions pertaining to federally funded or grant-funded Work. Contractor shall not submit false, fictitious, fraudulent, or misleading claims, certifications, invoices, records, or statements.

21. Additional Award-Specific Terms

If the federal awarding agency, pass-through entity, grant agreement, disaster assistance program, or other funding source requires additional clauses, certifications, forms, reporting, wage determinations, environmental/historic preservation conditions, civil rights provisions, procurement certifications, or other requirements, such requirements are incorporated into the affected Task Order upon written notice by the City. Contractor shall execute additional documents reasonably required by the City to document compliance.

RESERVED

CITY COMMISSION MEETING
CITY OF ST. PETE BEACH
COMMISSION CHAMBERS

Agenda Report

Agenda Title Name: Authorize the City Manager to execute the Agreement with Cathcart Construction Company Florida, LLC for Civil On-Call Construction Services on an as-needed basis in an amount not to exceed annually appropriated funding.

Action Request: Motion to authorize the City Manager to execute the Agreement with Cathcart Construction Company Florida, LLC for Civil On-Call Construction Services on an as-needed basis in an amount not to exceed annually appropriated funding.

Strategic Objective: Reliable Infrastructure

Date: June 23, 2026

Prepared By: Camden Mills, Public Services Director

Through: Frances Robustelli, City Manager

Summary of Issue: The City publicly advertised a Request for Proposals (RFP) for a task work order-driven Civil On-Call Construction Services contract. Five (5) responsive proposals were received on March 18, 2026. Following evaluation, the City's selection committee recommended award to Ajax Paving Industries of Florida LLC, BCS Construction Group, Cathcart Construction Company Florida LLC, PCS Civil LLC, and Southern Road and Bridge LLC

- Qualifications and Experience
- References and Past Performance
- Capacity to Perform the Work
- Cost

The contract provides not-to-exceed unit prices for labor, materials, equipment, tools, transportation, and incidentals necessary to perform civil construction services on an as-needed basis throughout the City. Projects may include roadway and intersection improvements, drainage upgrades, ADA improvements, sidewalk construction, alley improvements, signing and pavement markings, recreational trails, traffic signal improvements, and

intelligent transportation system (ITS) infrastructure.

Work will be authorized by task order on an as-needed basis in an amount not to exceed annually appropriated funding. The initial contract term is three (3) years with the option for two (2) additional one (1) year renewals upon mutual agreement and annual appropriation of funds.

Approval of this agreement will provide the City with qualified contractors to perform civil infrastructure improvements in a timely and cost-effective manner, improve responsiveness to maintenance and capital project needs, and support implementation of the City's transportation, drainage, utility, and public infrastructure programs.

Funding:

301.5410.563000 Improvements Other Than Buildings (remaining balance $211,746.90)

301.5411.563000 Improvements Other Than Buildings (remaining balance $8,478,760.96)

301.5726.563000 Improvements Other Than Buildings (remaining balance $825,791.26)

Other CIP funding sources may be used based on the available annual budget

Attachments:

1. Cathcart Construction Company Contract Signed

CITY OF ST. PETE BEACH, FLORIDA
SERVICES AGREEMENT

Civil On-Call Construction Services

This is an Agreement (the "Agreement") entered into by and between the **CITY OF ST. PETE BEACH** (hereinafter "City") and **CATHCART CONSTRUCTION COMPANY-FLORIDA, LLC**. (hereinafter "Contractor"). The City and Contractor together shall be referred to as the "parties."

WHEREAS, The City properly issued a Request for Bids, attached and incorporated hereto as Exhibit "B" and the City Commission authorized the selection of Contractor at its 06/23/2026 public hearing.

WHEREAS, City desires to purchase from Contractor the services described in this Agreement.

WHEREAS, Contractor is in the business of providing the services described herein, and has submitted an appropriate proposal to the City to provide the same.

WHEREAS, this Agreement has been properly approved by the appropriate authority of the City and the Contractor.

NOW, THEREFORE, upon the mutual covenants contained herein, and other good and valuable considerations, the sufficiency of which is hereby acknowledged, the parties hereto hereby agree to the following:

1. Recitals. The foregoing recitals are true and correct and incorporated herein by reference.

2. Standard Contract Addendum. The attached Standard Contract Addendum, which contains all the Florida Statutorily required provisions applicable to this Agreement, is attached hereto as Exhibit "A" and its provisions modify and supplement this Agreement.

3. Scope of Services. The Contractor must perform all work for the City required by the contract documents as set forth below:

a. Contractor will furnish all labor, materials, and equipment necessary as indicated in the Request for Bids (Exhibit "B") in the amount of Not To Exceed the Annual Budgeted amount. Funding will be awarded by Task Orders.

b. Contractor must supervise the workforce to ensure that all workers conduct themselves and perform their work in a safe and professional manner. Contractor must comply with all OSHA safety rules and regulations in the operation of equipment and in the performance of the work. Contractor must at all times have a competent field supervisor on the job site to enforce these policies and procedures at the Contractor's expense.

c. Contractor will provide the City with seventy-two (72) hours written notice prior to the beginning of work under this Agreement and prior to any schedule change with the exception of changes caused by inclement weather.

d. Contractor must comply with any and all Federal, State, and local laws and regulations now in effect, or hereinafter enacted during the term of this Agreement, which are applicable to the Contractor, its employees, agents or subcontractors, if any, with respect to the work and services described herein. The Contractor further warrants that there has been no violation of copyrights or patent rights either in the United States of America or in foreign countries in connection with the work of the contract.

e. Contractor warrants to the City that all goods and materials furnished under the contract will be new unless otherwise specified and that contractor possesses good, clear, and marketable title to said goods and there are no pending liens, claims, or encumbrances whatsoever against said goods. All work not conforming to these requirements, including substitutions not properly approved and authorized may be considered defective. Contractor further warrants that all goods, materials and workmanship furnished, whether furnished by the Contractor or its subcontractors and suppliers, will comply with the specifications, drawings and other descriptions supplied or adopted. Last, Contractor warrants all material and workmanship for a minimum of (1) year from date of project completion and acceptancy by the City. If within one (1) year after acceptance by the City, or within such larger period of time as may be prescribed by law any of the work is found to be defective or not in accordance with the contract documents, the Contractor will, after receipt of a written notice from the City to do so, promptly correct the work.

4. Damages. Time is of the essence in the performance of this Agreement. City shall be entitled to liquidated damages in the amount of $500 per day, for each day after the date set forth in paragraph 10, that Contractor has failed to properly and completely deliver all goods or provide all service specified herein. The Contractor specifically acknowledges that the foregoing sum is reasonable and does not constitute a penalty.

5. Remedies.

   a. Damages. The City reserves the right to recover any ascertainable actual damages incurred as a result of the failure of the Contractor to perform in accordance with the requirements of this Agreement, or for losses sustained by the city resultant from the Contractor's failure to perform in accordance with the requirements of this Agreement.

   b. Correction of Work. If, in the judgment of the City, work provided by the Contractor does not conform to the requirements of this Agreement, or if the work exhibits poor workmanship, the city reserves the right to require that the Contractor correct all deficiencies in the work to bring the work into conformance without additional cost to the City, and/or replace any personnel who fail to perform in accordance with the requirements of this Agreement. The City is the sole judge of non-conformance and the quality of workmanship.

6. Waiver of Liens. Prior to final payment of the Contract Sum, a final waiver of lien must be submitted by all suppliers, subcontractors, and/or Contractors who worked on the project that is the subject of this Agreement.

7. Warranties.

a. Warranty of Title. Contractor warrants to the City that all goods and materials furnished under the contract will be new unless otherwise specified and that Contractor possesses good, clear, and marketable title to said goods and there are no pending liens, claims, or encumbrances whatsoever against said goods. All work not conforming to these requirements, including substitutions not properly approved and authorized may be considered defective.

b. Warranty of Specifications. The Contractor warrants that all goods, materials, workmanship furnished, whether by the Contractor or its subcontractors and suppliers, will comply with the specifications, drawings and other descriptions supplied or adopted.

c. Warranty of Merchantability. The Contractor warrants all material and workmanship for a minimum of one (1) year from date of project completion and acceptance by the City. If within one (1) year after acceptance by the city, or within such larger period of time as may be described by law any of the work is found to be defective or not in accordance with the contract documents, the Contractor must after receipt of a written notice from the City to do so, promptly correct the work unless the City has previously given the Contractor a written acceptance of such condition.

8. Term. This Agreement will remain in effect for a period of (3) three years with (2) two, (1) one-year extensions from the Effective Date.

9. Effective date. The "Effective Date" of this Agreement shall be the date this Agreement has been executed by all parties.

10. Termination. This Agreement may be canceled by the City when:
   a. Sufficient funds are not available to continue its full and faithful performance to the Agreement.
   b. Sub-standard or non-performance of Agreement.
   c. The City wishes to terminate the Agreement at any time and for any reason, upon giving thirty (30) days prior written notice to the Contractor.

11. Fiscal Non-funding. If funds for the requested services described herein are not appropriated via the annual budget adoption process, the City reserves the right to cancel the Agreement immediately upon written notice to the Contractor.

12. Non-Exclusivity. Contractor acknowledges that the City may enter into agreements with other consultants or may have its own employees complete the work for services similar to the services that are subject to this Agreement.

13. Compensation. Upon Contractor's satisfactory full performance of the services or in accordance with the payment schedule provided in the attached proposal, City shall pay Contractor, as full consideration for services provided in this Agreement.

14. Insurance. To the extent that this Agreement requires Contractor to provide any services of any kind, Contractor and all of Contractor's subcontractors shall maintain public liability insurance in a combined single limit for bodily injury and property damage in the amount of not less than $1,000,000.00, satisfactory to the City Manager, naming the City as an additionally named insured

and providing coverage up through and including the final performance of any services provided herein. Contractor and all of Contractor's subcontractors shall maintain in full force and effect a policy of worker's compensation insurance for all of Contractor's employees in accordance with applicable state and federal law. Said insurance coverage shall include employer's liability with a single limit of $100,000.00 per accident or occurrence. Contractor shall present City with a certificate for all the foregoing insurance, at the time of executing this Agreement and at such other times requested by the City.

The Contractor waives all rights against the City, its consultants, separate contractors, if any, and any of its subcontractors, agents and employees, for any and all damages caused to the extent covered by insurance described herein and obtained pursuant to this Section or other property insurance applicable to the services and product provided under this Agreement. The City shall require of the Contractor, Contractor's consultants, separate contractors, if any, and the subcontractors, sub-subcontractors, agents and employees of any of them, by appropriate agreements, written where legally required for validity, similar waivers each in favor of other parties enumerated herein. The policies shall provide such waiver of subrogation by endorsement otherwise. A waiver of subrogation shall be effective as to a person or entity even though that person or entity would otherwise have a duty of indemnification, contractual or otherwise, did not pay the insurance premium directly or indirectly, and whether or not the person or entity had an insurable interest in the property damaged.

15. Indemnification. In consideration of the payment of ten dollars as part of the compensation described herein, such sum being specifically found by Contractor to be sufficient consideration for this indemnification, Contractor shall indemnify, defend and hold the City harmless for itself, its past/present/future elected and appointed officials, its employees, agents and assigns, from and against any and all losses, claims, damages, suits, actions, liability or demands, including attorneys' fees and costs of litigation through all appellate proceedings, arising from the performance or non-performance of this Agreement, whether caused in part by the City or not, and in connection with violations of copyrighted or trademarked materials used by Contractor, loss of life, bodily or personal injury, or property damage, including loss of use thereof, directly or indirectly caused by, resulting from, arising out of or occurring in connection with the operations of the Contractor or its officers, employees, agents, subcontractors, or independent Contractors, excepting only such loss of life, bodily or personal injury, or property damage solely attributable to the gross negligence or willful misconduct of the City or its elected or appointed officials and employees. In any and all claims against the City, or any of their agents or employees by any employee of the Contractor any subcontractor, anyone directly or indirectly employed by any of them or anyone for whose acts any of them may be liable, the indemnification obligation under this paragraph is not limited in any way by any limitation in this amount or type of damages compensation or benefits payable by or for the Contractor or any subcontractor under Workers' Compensation Acts, Disability Benefit Acts or other Employee Benefit Acts. Nothing contained herein is intended nor may it be construed, to waive City's rights and immunities under the common law or Section 768.28, Florida Statutes, as amended from time to time; nor will anything included herein be construed as consent to be sued by any third parties in any matter arising out of this Agreement. To the extent considered necessary by the Contract Administrator and the City Attorney, any sums due Contractor under this Agreement may be retained by the City until all of the City's claims subject to this indemnification obligation have been settled or otherwise resolved,

and any amount withheld is not subject to payment of interest by the City. The above provisions will survive the termination or expiration of this Agreement and will pertain to any occurrence during the term of this Agreement, even though the claim may be made after the termination or expiration hereof.

16. Discriminatory Vendor List. Contractor hereby acknowledges its continuous duty to disclose to the City if the Contractor or any of its affiliates, as defined by Section 287.134 (1)(a), Florida Statutes, are placed on the Discriminatory Vendor List. Pursuant to Section 287-134 (2)(a), Florida Statutes: "An entity or affiliate who has been placed on the discriminatory vendor list may not submit a bid, proposal, or reply on a contract to a public entity; may not submit a bid or proposal, or reply on a contract with a public entity for the construction or repair of a public building or public work; may not submit bids, proposals, or replies on leases of real property to a public entity; may not be awarded or perform work as a contractor, supplier, subcontractor, or consultant under a contract with any public entity; and may not transact business with any public entity."

17. Independent Contractor. This Agreement does not create an employee/employer relationship between the parties. It is the intent of the parties that the Contractor is an independent contractor under this Agreement and not the City's employee for any purposes, including but not limited to, the application of the Fair Labor Standards Act minimum wage and overtime payments, Federal Insurance Contribution Act, the Social Security Act, the Federal Unemployment Tax Act, the provisions of the Internal Revenue Code, the State Worker's Compensation Act, and the State Unemployment Insurance law. The Contractor will retain sole and absolute discretion in the judgment of the manner and means of carrying out Contractor's activities and responsibilities hereunder provided, further that administrative procedures applicable to services rendered under this Agreement will be those of Contractor, which policies of Contractor will not conflict with City, State, or United States policies, rules, or regulations relating to the use of Contractor's funds provided for herein. The contractor agrees that it is a separate and independent enterprise from the City, that it had full opportunity to find other business, that it has made its own investment in it business, and that it will utilize a high level of skill necessary to perform the work. This Agreement must not be construed as creating any joint employment relationship between the Contractor and the City and the City will not be liable for any obligation incurred by Contractor, including but not limited to unpaid minimum wages and/or overtime premiums.

18. Audit Rights. The City reserves the right to audit the records of the Contractor for the commodities and/or serves provided under the contract at any time during the performance and term of the contract and for a period of five (5) years after completion and acceptance by the City. If required by the City, the Contractor agrees to submit to an audit by an independent certified public accountant selected by the City. The Contractor must allow the City to inspect, examine and review the records of the Contractor in relation to this Agreement at any an all times during normal business hours during the term of the Agreement.

19. Exhibits. The following Exhibits shall be attached, incorporated, and made a part of this Agreement:
    a. Standard Contract Addendum (Exhibit "A")
    b. Request for Bid/Proposal (Exhibit "B")

c. Vendor Bid/Proposal (Exhibit "C")
d. Conditional Federal/Grant-Funded Contract Addendum (Exhibit "D")

20. Notices. All notices sent pursuant to this Agreement shall be given in writing via certified mail or overnight courier and shall be delivered to the following addresses:

As to Contractor:
Cathcart Construction Company-Florida LLC
1056 Willa Springs Drive
Winter Springs Florida 32708

As to City:
City Manager
City of St. Pete Beach
155 Corey Avenue
St. Pete Beach, FL 33706

With Copy To:
rmccellan@cathcartconstruction.com

With Copy To:
attorney@stpetebeach.org

21. Conflicts and Severability. To the extent that any terms in the attached proposal conflict with the terms of this Agreement, the terms of this Agreement shall control and supersede such conflicting terms in the attached proposal, to the extent of such conflict. If any section, part of section, paragraph, clause, phrase, or word of this Agreement is declared invalid, the remaining provisions of this Agreement shall not be affected.

22. Amendments. This document and exhibits embody the entire Agreement of the parties. There are no promises, terms, conditions, or representations binding on either party hereto, other than those contained herein; and this document shall supersede all previous communications, representations, and/or agreements between the parties hereto, whether written or oral. This Agreement shall not be modified by any oral statement, communication, Agreement, course of conduct, or by anything other than a writing signed by the parties. This Agreement may be amended or modified only in writing signed by all parties hereto.

23. Jurisdiction, Venue, Attorney Fees. This Agreement shall be governed and construed according to the laws of Florida, and venue for any action arising herefrom shall be in Pinellas County, Florida. The prevailing party in any action to enforce or interpret this Agreement shall be entitled to reasonable attorney's fees incurred through all appellate proceedings.

24. Assignment. This Agreement shall be binding upon the parties, their successors, assigns, and legal representatives. Contractor shall not assign or otherwise transfer any of the rights or duties under this Agreement, without the express written consent of the City.

25. Counterparts. This Agreement may be executed and delivered in any number of counterparts, each of which so executed and delivered shall be deemed to be an original and all of which shall constitute one and the same instrument. Facsimile, documents executed, scanned and transmitted electronically and electronic signatures shall be deemed original signatures for purposes of this Agreement and all matters related thereto, with such facsimile, scanned and electronic signatures having the same legal effect as original signatures.

26. Authority. Contractor hereby acknowledges that the person executing this Agreement on behalf of Contractor has the full authority to do so and to bind Contractor to the terms hereof.

IN WITNESS WHEREOF, the Parties have executed this Agreement on the day and year set forth below.

Under penalties of perjury, and pursuant to Sec. 92.525, Fla. Stat., Contractor declares that Contractor has read the Section 15 of the Standard Contract Addendum, Exhibit "A", and that the facts stated in it are true.

Cathcart Construction Company-Florida LLC:

Signature: _____

By: Matt T. Blanton

Its: President

Date: 06/01/2026

City of St. Pete Beach:

Signature: _____

By: Frances Robustelli

Its: City Manager

Date: _____

APPROVED AS TO FORM
AND LEGAL SUFFICIENCY:

_____
Ralf Brooks
City Attorney

ATTEST:

_____
Renee Rose
City Clerk

EXHIBIT "A"

Standard Contract Addendum

(Place Standard Contract Addendum behind this page)

CITY OF ST. PETE BEACH, FLORIDA
STANDARD CONTRACT ADDENDUM

THIS STANDARD CONTRACT ADDENDUM is made and entered into this _____ day of _____, 2026, by and between the CITY OF ST. PETE BEACH, a Florida municipality, hereinafter referred to as the "City", and _____, hereinafter referred to as "Contractor", concerning that certain agreement dated the ____ day of _____, 2026 ("Agreement") and titled _____.

WITNESSETH:

WHEREAS, Section 119.0701, Fla. Stat., requires that certain public agency contracts must include certain statutorily required provisions concerning the contractor's compliance for Florida's Public Records Act; and

WHEREAS, Section 768.28, Fla. Stat., sets forth certain mandatory limitations on indemnification and liability for Florida public agencies; and

WHEREAS, Florida law requires that public agency contracts be subject to non-appropriation and thereby contingent upon appropriation during the public agency's statutorily mandated annual budget approval process; and

WHEREAS, Section 448.095, Fla. Stat., imposes certain obligations on public agencies with regard to the use of the E-Verify system by their contractors and subcontractors; and

WHEREAS, Section 287.133 and 287.135, Fla. Stat., provides restrictions on local governments contracting with companies that are on certain Scrutinized Companies lists or convicted vendor list; and

WHEREAS, additional terms required by Sections 282.3185(5) and (6) Fla. Stat. related to data management and Section 287.05701 Fla. Stat. related to social government and corporate activism are also added by virtue of this Addendum; and

WHEREAS, Section 286.101, Florida Statutes contains a list of "foreign countries of concern" including, the People's Republic of China, the Russian Federation, the Islamic Republic of Iran, the Democratic People's Republic of Korea, the Republic of Cuba, the Venezuelan regime of Nicolás Maduro, or the Syrian Arab Republic, including any agency of or any other entity under significant control of such "foreign country of concern". Any entity that does business with a state agency or political subdivision must disclose certain of their dealings with those "foreign countries of concern" to the Florida Department of Financial Services; and

WHEREAS, Section 787.06(13), Fla. Stat. provides that when a contract is executed, renewed, or extended between a nongovernmental entity and a governmental entity, the nongovernmental entity must provide the governmental entity with an affidavit signed by an

officer or a representative of the nongovernmental entity under penalty of perjury attesting that the nongovernmental entity does not use coercion for labor or services as defined in such statute;

NOW, THEREFORE, in consideration of the covenants set forth herein, the parties agree to this addendum as follows:

1. Amendment. This Addendum hereby amends and supplements the terms of the Agreement. In the event of a conflict between the terms of the Agreement and terms of the Addendum, the terms of the Addendum shall prevail.

2. Public Records Compliance. Contractor agrees that, to the extent that it may "act on behalf" of the City within the meaning of Section 119.0701(1)(a), Florida Statutes in providing its services under this Agreement, it shall:

(a) Keep and maintain public records required by the public agency to perform the service.

(b) Upon request from the public agency's custodian of public records, provide the public agency with a copy of the requested records or allow the records to be inspected or copied within a reasonable time at a cost that does not exceed the cost provided in this chapter or as otherwise provided by law.

(c) Ensure that public records that are exempt or confidential and exempt from public records disclosure requirements are not disclosed except as authorized by law for the duration of the contract term and following completion of the contract if the contractor does not transfer the records to the public agency.

(d) Upon completion of the contract, transfer, at no cost, to the public agency all public records in possession of the contractor or keep and maintain public records required by the public agency to perform the service. If the contractor transfers all public records to the public agency upon completion of the contract, the contractor shall destroy any duplicate public records that are exempt or confidential and exempt from public records disclosure requirements. If the contractor keeps and maintains public records upon completion of the contract, the contractor shall meet all applicable requirements for retaining public records. All records stored electronically must be provided to the public agency, upon request from the City's custodian of public records, in a format that is compatible with the information technology systems of the City.

(e) Pursuant to Section 119.0701(2)(a), Fla. Stat., **IF THE CONTRACTOR HAS QUESTIONS REGARDING THE APPLICATION OF CHAPTER 119, FLORIDA STATUTES, TO THE CONTRACTOR'S DUTY TO PROVIDE PUBLIC RECORDS RELATING TO THIS AGREEMENT, CONTACT THE CUSTODIAN OF PUBLIC RECORDS AT:**

Renee Rose
City Clerk/Public Records Custodian
cityclerk@stpetebeach.org

Phone: 727-363-9220
155 Corey Avenue
St. Pete Beach, FL 33706
Fax: 727-541-8040

3. Public Records Compliance Indemnification. Contractor agrees to indemnify and hold the City harmless against any and all claims, damage awards, and causes of action arising from the contractor's failure to comply with the public records disclosure requirements of Section 119.07(1), Florida Statutes, or by contractor's failure to maintain public records that are exempt or confidential and exempt from the public records disclosure requirements, including, but not limited to, any third party claims or awards for attorneys' fees and costs arising therefrom. Contractor authorizes the public agency to seek declaratory, injunctive, or other appropriate relief against Contractor in Pinellas County Circuit Court on an expedited basis to enforce the requirements of this section.

4. Compliance/Consistency with Section 768.28, Fla. Stat. Any indemnification or agreement to defend or hold harmless by City specified in the Agreement shall not be construed as a waiver of City's sovereign immunity, and shall be limited to such indemnification and liability limits consistent with the requirements of Section 768.28, Fla. Stat. and subject to the procedural requirements set forth therein. Any other purported indemnification by City in the Agreement in derogation hereof shall be void and of no force or effect.

5. Non-appropriation. City's performance and obligation to pay under this Agreement is contingent upon an appropriation during the City's annual budget approval process. If funds are not appropriated for a fiscal year, then the Contractor shall be notified as soon as is practical by memorandum from the City Manager or designee that funds have not been appropriated for continuation of the Agreement, and the Agreement shall expire at the end of the fiscal year for which funding has been appropriated. The termination of the Agreement at fiscal year end shall be without penalty or expense to the City subject to the City paying all invoices for services rendered during the period the Agreement was funded by appropriations.

6. E-Verify Compliance. By entering into this Agreement, the Contractor is obligated to comply with the provisions of Section 448.095, Fla. Stat. "Employment Eligibility," as amended from time to time. This includes but is not limited to register with and use the E-Verify System to verify the work authorization status of all newly hired employees, and requiring all subcontractors to provide an affidavit to Contractor attesting that the subcontractor does not employ, contract with, or subcontract with, an unauthorized alien. Contractor agrees to maintain a copy of such affidavit for the duration of this Agreement. Failure to comply with this paragraph will result in the termination of this Agreement as provided in Section 448.095, Fla. Stat., as amended and Contractor will not be awarded a public contract for at least one (1) year after the date on which the Agreement was terminated. Contractor will also be liable for any additional costs to the City as a result of the termination of this Agreement in accordance with this paragraph. Contractor affirmatively states, under penalty of perjury, that in accordance with Section 448.095, Fla. Stat., Contractor is registered with and uses the E-Verify system to verify the work authorization status of all newly hired employees, that in accordance with such statute, Contractor requires from each of its subcontractors an affidavit stating that the subcontractor does not employ, contract with, or

subcontract with an unauthorized alien, and that Contractor is otherwise in compliance with Sections 448.09 and 448.095, Fla. Stat.

7. Compliance/Consistency with Scrutinized Companies Provisions of Florida Statutes. Section 287.135(2)(a), Fla. Stat., prohibits a company from bidding on, submitting a proposal for, or entering into or renewing a contract for goods or services of any amount if, at the time of contracting or renewal, the company is on the Scrutinized Companies that Boycott Israel List, created pursuant to Section 215.4725, Fla. Stat., or is engaged in a boycott of Israel. Section 287.135(2)(b), Fla. Stat., further prohibits a company from bidding on, submitting a proposal for, or entering into or renewing a contract for goods or services over one million dollars ($1,000,000) if, at the time of contracting or renewal, the company is on either the Scrutinized Companies with Activities in Sudan List or the Scrutinized Companies with Activities in the Iran Petroleum Energy Sector List, both created pursuant to section 215.473, Fla. Stat., or the company is engaged in business operations in Cuba or Syria. Contractor hereby certifies that Contractor is not listed on any of the following: (i) the Scrutinized Companies that Boycott Israel List, (ii) Scrutinized Companies with Activities in Sudan List, or (iii) the Scrutinized Companies with Activities in the Iran Petroleum Energy Sector List. Contractor further hereby certifies that Contractor is not engaged in a boycott of Israel or engaged in business operations in Cuba or Syria. Contractor understands that pursuant to section 287.135, Fla. Stat., the submission of a false certification may subject Contractor to civil penalties, attorney's fees, and/or costs. Contractor further understands that any contract with City for goods or services of any amount may be terminated at the option of City if Contractor (i) is found to have submitted a false certification, (ii) has been placed on the Scrutinized Companies that Boycott Israel List, or (iii) is engaged in a boycott of Israel. And, in addition to the foregoing, if the amount of the contract is one million dollars ($1,000,000) or more, the contract may be terminated at the option of City if the company is found to have submitted a false certification, has been placed on the Scrutinized Companies with Activities in Sudan List or the Scrutinized Companies with Activities in the Iran Petroleum Energy Sector List, or has been engaged in business operations in Cuba or Syria.

8. Disclosure Requirements for "Foreign Countries of Concern". CONTRACTOR shall comply with the disclosure requirements set forth is Section 286.101 (3) (a), Fla. Stat., which requires "Any entity that applies to a state agency or political subdivision for a grant or proposes having a contract value of $100,000 or more shall disclose to the state agency or political subdivision any current or prior interest of, any contract with, or any grant or gift received from a "foreign country of concern" if such interest, contract, grant or gift received from a "foreign country of concern" if such interest, contract, grant or gift has a value of $50,000 or more and such interest existed at any time or such contract, grant or gift was received or in force at any time during the previous five (5) years. Such disclosure shall contain the name and mailing address of the disclosing entity, the amount of the gift or the value of the interest disclosed, the applicable "foreign country of concern" and, if applicable the date of termination of the contract or interest, the date of receipt of the grant or gift and the name of the agent or controlled entity that is the source or interest holder. Within one (1) year before applying for any grant or proposing any contract, such entity must provide a copy of such disclosure to the Department of Financial Services". Pursuant to Section 286.101(7), Fla. Stat.: "In addition to any fine assessed under [section 286.101(7)(a), F.S.], a final order determining a third or subsequent violation by an entity other than a state agency or political subdivision shall automatically disqualify the entity from

eligibility for any grant or contract funded by a state agency or any political subdivision until such ineligibility is lifted by the Administration Commission for good cause."

9. Venue and Jurisdiction. Notwithstanding any of other provision to the contrary, this Agreement and the parties' actions under this Agreement shall be governed by and construed under the laws of the State of Florida, without reference to conflict of law principles. As a material condition of this Agreement, each Party hereby irrevocably and unconditionally: i) consents to submit and does submit to the jurisdiction of the Circuit Court in and for Pinellas County, Florida for any actions, suits or proceedings arising out of or relating to this Agreement. Both parties waive any right to file an action, suit or proceeding in Federal Court or remove any action, suit or proceeding to Federal Court.

10. Attorneys' Fees and Costs. Notwithstanding any of other provision to the contrary, if litigation ensues regarding this Agreement, each party hereto shall bear its own attorneys' fee and costs.

11. Public Entities Crime or Convicted Vendor List. Contractor agrees and assumes a continuous duty to disclose to the City if the Contractor or any of its affiliates as defined by Section 287.133(1)(a), Florida Statutes are placed on the Convicted Vendor List or the Antitrust Violator Vendor List maintained by the Florida Department of Management Services.

12. Data Management; Notice of Breach. Contractor shall cooperate with the City and provide timely incident reporting, response activities/fact gathering, public and agency notification, severity level assessment, after-action reports, etc., which the City must report in accordance with Sections 282.3185(5) & (6), Florida Statutes in the event of a data breach.

13. Environmental and Social Government and Corporate Activism. The City has not given preference or requested documentation from the Contractor based on Contractor's social, political or ideological interest. Contractor agrees to similarly not request documentation or give preference to any subcontractor based on the subcontractor's social, political or ideological interests.

14. Taxes. The City shall not be liable for any taxes and assessments imposed by a federal, state or local governmental agency to the extent that the City is exempt from same by Florida law, including but not limited to any sales or use tax.

15. No coercion for labor or services. The Contractor swears under penalty of perjury that the Contractor does not use coercion for labor or services as defined as follows:

"Coercion" means:

1. Using or threatening to use physical force against any person;
2. Restraining, isolating, or confining or threatening to restrain, isolate, or confine any person without lawful authority and against her or his will;
3. Using lending or other credit methods to establish a debt by any person when labor or services are pledged as a security for the debt, if the value of the labor or services as reasonably assessed is not applied toward the liquidation of the debt, the length and nature of the labor or services are not respectively limited and defined;

4. Destroying, concealing, removing, confiscating, withholding, or possessing any actual or purported passport, visa, or other immigration document, or any other actual or purported government identification document, of any person;

5. Causing or threatening to cause financial harm to any person;

6. Enticing or luring any person by fraud or deceit; or

7. Providing a controlled substance as outlined in Schedule I or Schedule II of Sec. 893.03, Fla. Stat. to any person for the purpose of exploitation of that person.

16. Force Majeure. The City reserves the right to suspend, modify or terminate this contract in the event of an act of god or act of man beyond the control of the parties, including but not limited to a hurricane, tropical storm, tornado, or other destructive weather event, flooding, pandemic, plague, war, armed conflict, domestic or foreign terrorism, riot, labor condition, state or federal governmental action, and catastrophic Internet disturbance, making performance inadvisable, economically impracticable, illegal, or impossible.

17. Additional Terms. Notwithstanding any of other provision to the contrary, the parties agree as follows:

A. None.

IN WITNESS WHEREOF, the parties hereto have executed and delivered this instrument on the days and year indicated below and the signatories below to bind the parties set forth herein.

Under penalties of perjury, and pursuant to Sec. 92.525, Fla. Stat., Contractor declares that Contractor has read the foregoing Section 15 above and that the facts stated in it are true.

Contractor:

Print Name: Matt Blanton

Title: President

Company: Cathcart Construction Company - Florida, LLC

ATTEST:

Renee Rose, City Clerk

City of St. Pete Beach:

Frances Robustelli, City Manager

EXHIBIT "B"

Request for Bid/Proposal

(Place Request for Bid/Proposal behind this page)

City of St Pete Beach
Request for Proposal

Civil On Call Construction Services

Timeline	Date	Time
Publication of Bid	03/11/2026	8:00 AM
Pre-Bid Meeting	03/18/2026	10:00 AM
Deadline for Question Submission	03/25/2026	10:00 AM
Submittal Deadline electronically via Bonfire	04/08/2026	9:00 AM
Submittal Opening	04/08/2026	11:00 AM

Submittals are due on or before
04/08/2026 at 9:00 AM EST
Electronically Via Bonfire Only

TABLE OF CONTENTS

I. INVITATION 3
II. STATEMENT OF WORK 4
III. BID FORM 26
IV. GENERAL CONTRACT TERMS 27
V. REFERENCES & MINIMUM QUALIFICATIONS 38
VI. CONTRACTOR'S PROPOSAL SUBMITTAL 39
VII. PUBLIC ENTITY CRIMINAL AFFIDAVIT 40
VIII. NON-COLLUSION AFFADAVIT 42

I. INVITATION

The City of St Pete Beach has issued this Request for Proposal (RFP) to solicit competitive bids and proposals from Proposers for a Task Work Order driven Civil On-Call Construction Services Contract. The successful bidder shall provide all labor, materials, equipment, tools, consumables, transportation, and incidentals to provide Public Services capital improvement projects construction services on an 'as needed' basis for the City of St Pete Beach.

The types of projects that may be assigned under this Contract shall include, but not be limited to:

- intersection/roadway improvements
- drainage upgrades and/or installations
- ADA upgrades and pedestrian/bicyclist improvements
- sidewalk installations and upgrades
- alley improvements
- median modifications
- signing and pavement markings
- recreational trails
- signal upgrades and installations
- intelligent transportation systems (ITS) components upgrades

CONTACT INFORMATION
Procurement Manager – Sara Spain
Email – purchasing@stpetebeach.org

II. STATEMENT OF WORK

PART I: GENERAL REQUIREMENTS

1. SPECIAL CONDITIONS

A. **Local Preference, Location Points and Tie Breakers**

Location preferences do not apply due to the fact that some task orders may be funded with state or federal dollars.

B. **Minority Business Enterprise Policy**

Minority Business Enterprise Evaluation Criteria do not apply due to the fact that some task orders may be funded with state or federal dollars.

C. **Scrutinized Companies**

Scrutinized Companies with activities in Sudan List or activities in the Iran Petroleum Energy Sector List do not apply due to the fact that some task orders may be funded with state or federal dollars.

D. **Bonding and Credit**

Contractor/Vendor shall provide a letter of bondability showing their maximum bonding capacity.

E. **Contract Term**

This will be a three (3) year initial contract with the option to be extended for two (2) additional one (1) year periods upon mutual consent of both parties. It is the intent of the City of St Pete Beach to award these services to more than one Contractor/Vendor.

F. **Contract Pricing**

Contract prices for equipment and/or service will remain firm through the first three (3) contract years. Sixty (60) days prior to the contract renewal date, Contractor/Vendor may request a price adjustment. The price adjustment and justification must be submitted in writing, and be approved by the City. Said price increase may not, under any circumstances, exceed three (3) percent of the Construction CPI. No retroactive contract price adjustments will be allowed. If the Contractor/Vendor fails to submit a price adjustment within the sixty (60) days prior to the contract renewal date, current contract pricing will continue for the contract renewal period.

G. **Work Assignments**

All work to be performed shall take the following into consideration prior to assignment of any work to any Contractor/Vendor, at the discretion of the Procurement Manager:

1. **Estimated Cost < $250,000.00:**

The City retains the right to select any Contractor/Vendor to whom a multiple-award contract has been made when the opportunity to submit a quote for any job whose estimated cost is less than Two Hundred & Fifty Thousand Dollars ($250,000.00).

2. **Estimated Cost > $250,000.00 and < $500,000.00:**

The City shall obtain three (3) quotes from any Contractor/Vendor to whom a multiple vendor award has been made, for those jobs whose estimated cost is greater than Two Hundred & Fifty Thousand Dollars ($250,000.00) and less than Five Hundred Thousand Dollars ($500,000.00).

3. **Estimated Cost > $500,000.00:**
   a. The City retains the right to separately and competitively bid any and all projects whose cost estimates are greater than Five Hundred Thousand Dollars ($500,000.00). The determination will be made by the City Procurement Manager.
   b. Projects that exceed Five Hundred Thousand Dollars ($500,000.00) may not be sub-divided into separate projects in order to circumvent such requirement.

4. **Reassignment of Work:**

The City retains the right and authority to reassign work to another Contractor/Vendor, at any time, for the following reasons:

a. The lowest Contractor/Vendor cannot comply with the specifications in cases of an emergency.
b. The lowest Contractor/Vendor cannot respond to the job requirements, at the time, due to scheduling conflicts, staffing considerations or other reasonable cause(s) for preventing their completion of the task as required.
c. The City shall have the option to solicit additional quotes, bids, or even professional opinion about a particular job when in its best interest and could engage the services of another company/Contractor/Vendor. This exception will always require advanced written notice and explanation by the requesting City Department to the Procurement Manager, for approval, before authorizing any contemplated work to be done. The receipt of the approved purchase order shall be understood that all work is to immediately begin on the project, per the project schedule and needs as identified by the City and as agreed upon by the Contractor/Vendor.

5. **Cumulative Work shall not exceed $4,000,000.00:**

The cost of all work completed by a Contractor/Vendor shall not exceed Four Million Dollars ($4,000,000.00) in a calendar year. If all costs are expected to exceed this threshold, these services will need to be separately re-bid through issuance of a new set of bid specifications.

H. **Quotes**

1. The City will request a quote if and when needed. Vendors participating in the contract shall have ten (10) business days from written notification to respond to quotes, unless waived by the Procurement Manager. If work is an emergency, as determined by the City, vendors shall have (24) hours from email or phone notification to respond to quotes.
2. A Task Order Form will be provided to awarded Contractor/Vendor. A properly executed Purchase Order shall be issued for the work assignment and shall have the Task Order Form and all related paperwork attached as backup. The Purchase Order shall indicate the start and end dates for the project.
3. If the Contractor/Vendor does not wish to issue a quote for or cannot meet the requirements of the project, inclusive of the time given in which to complete the job; the Contractor/Vendor shall complete the Work Order Form by noting "No Quote" on the form itself and by also providing an explanation as to why they are not submitting a quote.
4. Final costs for any individual project shall not exceed the original approved and total cost for such project by more than ten percent (10%). Any and all anticipated project cost increases are subject to advanced approval by the Procurement Manager.
5. Any Contractor/Vendor that fails to submit a quote successively three (3) times in a row may have their contract cancelled due to non-performance.

I. **Notice to Proceed (NTP)**

All task orders $250,000.00 or less will use the purchase order as the Notice to Proceed (NTP). The start date and date or the number of day to complete the project must be included on the purchase order. If the start date is left off the purchase order then the date of the purchase order approval will default as the NTP start date. Projects over $250,000.00 will have a formal NTP issued through the Purchasing Division. All task orders must be reviewed by the Purchasing Division before a purchase order or NTP is issued.

J. **Liquidated Damages**

Liquidated damages will be assessed to the Contractor/Vendor/vendor for each consecutive calendar day completion of the project or work is delayed. The amount of liquidated damages will be dependent on the cost of the task order and will be calculated using the chart below.

Estimated Project Cost Over	Estimated Project Cost But Less than	Daily Charge Per Calendar Day
$0.00	$50,000.00	$960.00
$50,000.00	$250,000.00	$965.00
$250,000.00	$500,000.00	$1,245.00
$500,000.00	$2,500,000.00	$1,665.00
$2,500,000.00	$5,000,000.00	$2,715.00

K. **Project Spreadsheet Submittal**

Contractor/Vendor must submit a formal spreadsheet using the process below.

1. List of completed projects to include:
   a. Relevant project experience includes construction and delivery methods relevant to the type of project to be constructed utilizing the CM/GC method (or performing as a General Contractor/Vendor on similar types and sizes of projects).
   b. Describe no more than ten (10) and no less than five (5) projects in order of most relevant to least relevant (similar type of construction with a contract dollar amount of $500,000.00 or less) which demonstrates the firm's capabilities to perform such projects.
   c. For each project, the following information should be provided:
      i. Project name
      ii. Project location
      iii. Dates during which services were performed
      iv. Physical description (e.g. square footage, key components, site area)
      v. Brief description of Project Services performed by CM/GC or GC Firm.
      vi. Owners Information:
         a. Contact person
         b. Telephone number
         c. Email
         d. Project name
         e. Owner reference
         f. Original Contract Price
      vii. Amount of Change Orders by:
         a. Your Company
         b. Consultant
         c. Client/Entity
      viii. Final Project Price
      ix. Proposer should include a table with this information layout as follows:

Entity Name and Project Name	Contact Person Phone Email	Begin Project Amount	Change Orders by CMR	Change Orders by Engineer	Change Orders by Entity	Final Cost of Projects	Original Days for Construction	Final Construction Days

2. Any outstanding accomplishments of the firm that relates to the specific services being sought.

3. Any Quality Assurance and Value Engineering Programs should also be included.

2. STANDARD SPECIFICATIONS

The Project shall be constructed in accordance with these specifications, the Pinellas County Engineering Standard Details and the Florida Department of Transportation "Standard Specifications for Road and Bridge Construction", Latest Edition.

3. GOVERNING DOCUMENTS

The Specifications and all supplementary documents are essential parts of the Contract, and a requirement occurring in one is as binding as though occurring in all. They are intended to be complimentary and to describe and provide for a complete project. In case of discrepancy, calculated dimensions will govern over scaled dimensions.

The Contractor shall take no advantage of any apparent error or omission in the specifications. If the Contractor discovers such an error or omission, they shall immediately notify the Project Manager. The Project Manager will then make such corrections and interpretations as may be deemed necessary for fulfilling the intent of the specifications.

4. COOPERATION WITH OTHERS

The Contractor shall cooperate with the owners of any underground or overhead utilities in their removal and rearrangement operations in order that these operations may progress in a reasonable manner and that service rendered by these parties will not be interrupted.

A. Permits

1. City ROW Use Permit: The Contractor will obtain a Right of Way Use Permit from the City Permits Division located at 155 Corey Avenue, Florida. There will be no fee for this permit.
2. Public Services will require shop drawings, schedule, and the location of staging areas at the pre-construction meeting. Where the Contractor wishes to use private property, he shall obtain permission from the owner in writing and submit a copy at the first meeting.
3. The Contractor will be responsible for the requirements of all permits. There may be FDOT permits required for this project.

5. LINES, GRADES AND CONSTRUCTION SURVEYING

The Contractor shall lay out the work from the benchmarks, grades, dimensions, points and lines noted on the working drawings, established at the site, or supplied by the Project Manager. All work of every description shall be laid out and checked by the Contractor who will be held solely responsible for its correctness, and the Contractor shall pay for all expenses in connection with this work. The Contractor shall request clarification from the Project Manager of any errors, inconsistencies or omissions which they may discover. It is the Contractor's responsibility to review every street prior to milling and paving, including the inspection of overhead tree limbs, overgrown grass on pavement, manholes and gate valves.

The work may be checked by the Project Manager, and in the event of a discrepancy, their decision shall be final. No special compensation will be made to the Contractor to defray costs of any work or delays occasioned by making surveys and measurements, tests, or inspections, but such costs shall be considered as having been included in the price stipulated for the several items of work to be done under this Contract.

All attempts shall be made to protect existing property corner monumentation. The monumentation must be identified and marked prior to construction to ensure its permanency. All survey monuments, property corners, and benchmarks, which may be disturbed during construction, shall be referenced and replaced by the Contractor. All monuments and benchmarks disturbed or destroyed by the Contractor or any of his forces through accident or negligence shall be replaced by a Florida Licensed Professional Land Surveyor at the Contractor's expense. All survey markings shall be brought to the attention of the Project Manager.

6. MAINTENANCE OF DETOURS

The Contractor shall repair, at his expense, all potholes and other localized failures on streets which are used as detour routes to facilitate construction operations.

7. REPLACEMENT OF TRAFFIC, STREET SIGNS, SIGNAL LOOPS AND MAILBOXES

The Contractor shall remove and re-erect all existing traffic, street signs and mailboxes within the project site at his own expense for those which must be moved or relocated to permit construction operations.

The Contractor shall notify the City prior to disturbing any traffic signal loops and the City will install new traffic signal loops under a separate contract.

8. USE OF PREMISES

The Contractor shall confine all apparatus to the roadway or right-of-way in which the work is being performed and will not unreasonably encumber these premises with such apparatus, materials, supplies, and equipment. The Contractor shall promptly remove and dispose of all debris resulting from his operations.

9. PROSECUTION OF WORK/ LIQUIDATED DAMAGES

The Contractor shall begin work on any project/road no later than fourteen (14) calendar days after receipt of the "Notice to Proceed"; and shall diligently prosecute the same to project completion prior to the expiration of the total number of calendar days determined necessary for the project, from the date of said "Notice to Proceed".
Failure to complete each project within the determined number of calendar days shall cause the Contractor to be subject to the provisions for Liquidated Damages. The Contractor shall pay to the City as fixed liquidated damages for each calendar day of delay until the work is complete or accepted, and the Contractor and their sureties, jointly and severally, shall be liable for the amount thereof:

A. For each Task Work Order issued, the City project manager will determine the required number of days for completion of all work as well as the amount for liquidated damages, as appropriate.

B. Liquidated Damages will be assessed in accordance with Part I, 2. Special Conditions, J. Liquidated Damages of these bid specifications.

** Please refer to City of St Pete Beach Terms and Conditions, “Liquidated Damages, Penalties and Non-Conformance to Contract”

10. CONSTRUCTION SCHEDULE

A. Work shall be performed on an “as needed” basis for a **three (3) year contract period**. Upon mutual consent, this agreement may be extended for **two (2) additional one (1) year periods**, subject to the same terms and conditions and available funding being in place. No guarantee of volume or quantity of work is intended.

B. At the direction of the City of St Pete Beach, the Contractor will not be allowed to proceed with the scheduled work until restoration of preceding work areas are restored to the satisfaction of the City of St Pete Beach. It is the intent of this project to:

1. Start paving each street no later than three (3) working days after milling each street. If the street has not been paved after three (3) working days, a fee equal to the daily amount for liquidated damages indicated in Item #2J (above) will be assessed until the street has been paved. The time limit for streets to be paved where sewer manhole castings or water valve boxes need to be adjusted or replaced will be three (3) working days after the casting or water valve boxes have been adjusted or replaced.

2. Complete restoration including temporary striping and clean-up, shall be finished in no more than five (5) working days after the completion of paving activity and as directed by the City.

3. No work shall be done during the week between the hours of 9:00 PM and 6:00 AM, or between the hours of 9:00 PM and 9:00 AM on weekends or holidays; except for emergency work by a public service utility or by other permit approved by the City.
4. Night work may be established by the Contractor as regular procedure by obtaining the written permission of the City. Such permission may be revoked at any time by the City, if the Contractor fails to maintain adequate equipment and supervision for the proper execution, control, and safety of the work at night.

C. Work may need to be performed under more urgent timeline at the direction of the City of St Pete Beach. The Contract bid form includes pay items for Emergency Mobilizations for such occurrences. The Contactor shall respond to Emergency Work Requests within 24 hours and should expect to mobilize in less than 72 hours.

11. CONTRACTOR'S ACCEPTANCE OF CONDITIONS

The provisions of this Contract shall control any inconsistent provisions contained in the specifications. All Drawings and Specifications have been read and carefully considered by the Contractor, who understands the same, and agrees to their sufficiency for the work to be done.

It is expressly agreed that under no circumstances, conditions or situations shall this Contract be more strongly construed against the City than against the Contractor and his Surety.

Any ambiguity or uncertainty in the Drawings or Specifications shall be interpreted and construed by the Project Manager, or their designee, and their decision shall be final and binding upon all parties.

It is distinctly understood and agreed that the passing, approval and/or acceptance of any part of the work or material by the City, the Project Manager, or by any agent or representative as in compliance with the terms of this Contract and/or of the Drawings and Specifications covering said work, shall not operate as a waiver by the City of strict compliance with the terms of this Contract, and/or the Drawings and Specifications covering said work; and the City may require the Contractor and/or his surety to repair, replace, restore and/or make to
comply strictly and in all things with this Contract and the Drawings and Specifications any and all of said work and/or materials which within a period of one year from and after the date of the passing, approval, and/or acceptance of such work or material, are found to be defective or to fail in any way to comply with this Contract or with the Drawings and Specifications.

This provision shall not apply to materials or equipment normally expected to deteriorate or wear out and become subject to normal repair and replacement before the condition is discovered. The Contractor shall not be required to do normal maintenance work under the guarantee provisions. Failure on the part of the Contractor and/or his surety, immediately after notice to either repair or replace any such defective materials and workmanship, shall entitle the City, if it sees fit, to replace or repair the same and recover the reasonable cost of such replacement and/or repair from the Contractor and/or his surety, who shall in any event be jointly and severally liable to the City for all damage, loss and expense caused to the City by Reason for the Contractor's breach of this Contract and/or his failure to comply strictly and in all things with this Contract and with the Drawings and specifications.

12. HAZARDOUS MATERIALS

The Contractor shall be responsible for the independent inspection and certification of the removal, transportation and disposal of all identified and all unidentified hazardous materials located within the project site.

13. JOB CONDITIONS

A. The Contractor is to provide the City with a working schedule prior to commencing the project. The City reserves the right to revise and/or adjust the schedule accordingly.

B. City Notification**:** At least 72 hours in advance of closing, or partially closing, any street, alley, or other public thoroughfare, the Contractor shall notify the Engineering Division of the Public Services Department, and immediately notify the same agencies of the reopening.

C. Customer Notification**:** The City of St Pete Beach residents occupying a home on the street to be milled and paved shall be notified seven (7) days before the construction of the street begins. This is completed by the following:

1. A door hanger notice will be provided by the Department of Public Services. It shall contain the reason for the construction, the overall length of time with dates, any problems that may be encountered and other important information regarding the project. The Contractor is responsible for the installation of the door hanger notices no later than seven (7) working days before the construction of the street begins.

2. The Contractor shall hand this notice to each resident. If the resident is not available, the Contractor is to place the door hanger on the doorknob. In certain sensitive areas, usually business areas and as requested by the Engineer, each customer may be asked to sign a signature sheet with their name, address, and signature. The original shall be given to the Department of Public Services before any construction commences.

D. Utility Emergency Access**:** All fire hydrants, valves, water meters and backflow assemblies shall be free of all construction material and equipment and in plain view for easy emergency access or necessary maintenance by the City crews.

E. Pedestrian or School Crossings**:** Where the work crosses or interferes with school or pedestrian crossings, extreme care shall be taken by the Contractor to insure the safety of the school children or other pedestrians.

F. Temporary Staging Areas**:** The Contractor shall obtain all temporary construction staging areas approvals required and shall not encroach onto private property unless a written agreement has been made between the property owner and the Contractor; or onto public property unless a written agreement has been made and approval by the Purchasing Division's designee has been received prior to using the land. The Contractor shall assume full responsibility for the protection and safekeeping of materials stored at the staging areas.

G. Erosion Control**:** Prior to construction, all efforts for siltation/erosion control will be taken, including the use of turbidity screens, hay bales, and sod replacement at the earliest possible time prior to and after excavation/grading. Sediment/erosion controls should be used around drainage structures and any areas to mitigate erosion on or off the project site. The Contractor is responsible for any removal of asphalt debris in manholes or drainage structures.

H. Road Hauling**:** The existing paved roads in the City shall be used for transporting material required for construction of the project. The Contractor should be aware that any road that is damaged during construction due to truck/equipment involvement would be the responsibility of the Contractor to correct. The Contractor shall contact the City for specific routes to be used during construction.

I. Water on Street**:** All water shall be removed, and the streets dry prior to paving. No paving shall take place during a rainstorm event.

J. Towing of Vehicles**:** The City will remove any cars parked in the way of the resurfacing project as long as proper notification has been given as stated under Section 13.c. (above) of the Scope of Work.

K. Clippings**:** Where grass, tree roots or other vegetation has grown over or above the edge of the asphalt, it shall be removed to the existing edge of asphalt by the Contractor prior to paving the street.

L. City Utilities**:** If work by the Contractor results in damage to City owned utilities; the Contractor shall repair the damage immediately at no cost to the City. If the Contractor does not respond immediately to repair the damaged utility, the City Utilities Department will make the repair and bill the Contractor for the costs incurred.

M. Dumpsters**:** The City will relocate all dumpsters in the way of this project. The Contractor is to provide written notice to the City forty-eight (48) hours in advance when said dumpsters need to be moved.

N. Disturbed Areas**:** All areas disturbed by the construction shall be restored to a condition at least equal to the pre-construction conditions or to what shall be approved by the Project Manager.

O. Security**:** The Contractor shall be responsible for the site security and shall determine whether full time watchmen will be required. The Contractor shall inspect the area daily and take whatever measures necessary to protect the safety of the public, workmen and materials both day and night.

P. Brick/Driveways**:** The Contractor shall be responsible for the tack coat not being spread to the brick crosswalks, brick intersections, brick speed tables, driveways or other similar areas due to the hauling of the asphalt. These areas shall be covered with sand or other City approved material. If tack appears on these items from the Contract, it shall be the responsibility of the Contractor to remove it.

Q. Interference with Others**:** The Contractor shall coordinate with Pinellas Suncoast Transit Authority or any public agency to notify the agency of any and all potential disruption in service. The Contractor shall not interfere with materials, appliances, or workmen of the City, Private Utility Companies, or any other contractor, who may be performing work at the same sites. All contractors and other parties involved shall have equal rights as far as practicable, to the use of all roads and grounds, except as otherwise provided by these specifications. The decision of the Project Manager shall govern in cases of disagreement between contractors or other parties regarding such use.

R. Public Safety**:** The Contractor shall provide, erect, and maintain continually, seven days per week and twenty-four hours per day, all necessary barricades, reflectorized signs, signals, flashing lights, red lights, "danger" or "caution" or "street closed" signs, etc., and take all necessary precautions necessary for the protection of the work and the safety of the public. The Contractor shall also provide a watchman at all places where the work causes obstructions to normal traffic or constitutes in any way a hazard to the public.

S. Cleaning Up**:** The Contractor shall always keep the construction area clean from accumulation of waste material or rubbish, including storage areas. The Contractor shall remove any rubbish, tools, scaffolding, equipment and materials from and about the premises, which do not belong to the City, prior to completion of the work. The Contractor shall leave the work and premises, following the completion of work, in a clean and workmanlike condition satisfactory to the Project Manager or their representative.

T. Coordination of Details with the County Sheriff**:** Any traffic detour plan must be submitted by the Contractor for approval to the Engineer of Record, the Engineering Division of the Public Services Department and the Pinellas County Sheriff at least two (2) weeks prior to the implementation of said detour in order to provide adequate time for review. Detour plans must include all streets involved in the detour.

U. Maintaining Proper Drainage Flow**:** No drainage structure or paved waterway shall be blocked by the new pavement work. New pavement shall be feathered or tapered towards the inlet opening. This task is to be included as part of the paving operation and there shall be no separate payment for this work. Any debris entering the drainage structure during construction is to be removed by the Contractor.

V. Responsibility of the Contractor**:** The Contractor shall be entirely responsible and liable for all damage or injury as a result of his operations to all other adjacent public and private property, structures of any kind and appurtenances thereto met with during the progress of the work. The cost of protection, replacement in their original locations and conditions or payment of damages for injuries to such adjacent public and private property and structures affected by the work, whether or not shown on the drawings and the removal, relocation and reconstruction of such items called for on the drawings or specified shall be included in the various Contract Items and no separate payments shall be made thereof. Where such public and private property, structures of any kind and appurtenances thereto are not shown on the drawings and when, in the opinion of the Project Manager to avoid interference with the work, payment therefore will be made as provided for extra work in the Agreement. The Contractor is expressly advised that the protection of the buildings, structures, tanks, pipelines, and related work adjacent and in the vicinity of his operations, wherever they may be, is solely his responsibility.

W. Protection of Trees, Lawn & Sod**:** All trees, shrubs and sod shall be adequately protected by and in accordance with all ordinances governing the protection of the trees. No materials shall be placed so as to injure such trees, shrubs and sod. Trees, shrubs and sod destroyed by negligence of the Contractor or his employees shall be replaced by him with new stock of similar size and age, at its proper season and at the sole expense of the Contractor. Trees close to the work shall be protected against injury. The Contractor shall trim all branches and roots in the road that are necessary to complete the project and are liable to damage his operations, but in no case shall any tree be cut or removed without prior notification of the Project Manager. It is the Contractor's responsibility to inspect all roads that are to be milled and resurfaced. All injuries to bark, trunk, limbs, and roots of trees shall be repaired by dressing, cutting, and painting according to approved methods, using only approved tools and materials under the direction of City Staff. Lawn areas shall be left in good condition as before the starting of the work. Where sod has been removed shall be restored with new sod in a good workmanship manner approved by the resident or the Project Manager. The sod shall match existing grass and shall have no visible broad leaf weeds or foreign grasses. Water for the sod shall be supplied by the Contractor in sufficient quantities required to keep the grassed areas moist for a period of one month from the date of installation. The Contractor shall guarantee the satisfactory growth for a 90-day period.

X. Noise**:** The Contractor shall eliminate noise to as great an extent as practicable at all times. Air compressing equipment shall be equipped with silencers and the exhaust of all gasoline motors or other power equipment shall be provided with mufflers. In the vicinity of hospitals and schools, special care shall be used to avoid noise or other nuisances. The Contractor shall strictly observe all local regulations and ordinances covering noise.

Y. Access to Public Services**:** No materials used in the construction of the work shall be placed as to prevent free access to all fire hydrants, valves, manholes, driveways and roadways.

14. SUBSTITUTIONS

Whenever material or equipment are specified or described in the Contract documents by using the name of a proprietary item or the name of a particular supplier the naming of the item is intended to establish the type, function and quality required. Unless the name is followed by words indicating that no substitution is permitted, materials or equipment of other suppliers may be accepted by Project Manager if sufficient information is submitted by Contractor to allow Project Manager to determine that the material or equipment proposed is an approved alternate to that named. The procedure for review by the Project Manager will include the following as supplemented in the General Requirements. Requests for review of substitute items of material and equipment will not be accepted by Project Manager from anyone other than Contractor. If Contractor wishes to furnish or use a substitute item of material or equipment, Contractor shall make written application to Project Manager for acceptance thereof, certifying that the proposed substitute will perform adequately the functions and achieve the results called for by the general design, be similar and an approved alternate to that specified and be suited to the same use as that specified. The application will state that the evaluation and acceptance of the proposed substitute will not prejudice Contractor's achievement of Substantial Completion on time, whether or not acceptance of the substitute for use in the work will require a change in any of the contract documents (or in the provisions of any other direct contract with City for work on the Project) to adapt the design to the proposed work is subject to payment of any license fee or royalty. All variations of the proposed substitute from that specified will be identified in the application and available maintenance, repair and replacement service will be indicated. The application will also contain an itemized estimate of all costs that will result directly or indirectly from acceptance of such substitute, including costs of redesign and claims of other Contractors; affected by the resulting change, all of which shall be considered by Project Manager in evaluating the proposed substitute. The Project Manager may require Contractor to furnish at Contractor's expense additional data about the proposed substitute.

15. MINIMUM QUALIFICATIONS

The City has established minimum qualifications for Contractor expertise and experience regarding the subject project as follows:

A. The Contractor must provide a minimum of three (3) project references and may provide a maximum of five (5) project references for each of the five (5) criteria listed below.

B. Each project reference must have been successfully completed in the ten (10) years preceding the bid opening.

C. All criteria do not need to be satisfied by each submitted project reference, however, all criteria must have been satisfied two (2) times by the submitted project references.

D. Any project for which references are provided may have been self-performed with Contractor’s employees or performed by a subcontractor who is part of the Contractor’s team for this project.

E. The Contractor qualification requirements include the following:

1. Construction of site work including clearing, grubbing, and fine grading.
2. Construction of flexible and rigid pavement roadways, alleys, and trails.
3. Construction of sidewalk and ADA accessibility improvements.
4. Construction of stormwater utility upgrades.

5. Construction of signal, lighting, and intelligent transportation system (ITS) component upgrades.

[END OF PART I]

PART II: PROGRESS MEETINGS

1. **FREQUENCY**

Progress meetings will be held every other week or less, with the first meeting fourteen (14) days after the pre-construction meeting or fourteen (14) days or less after the date of the Notice to Proceed.

The City has the right to hold called meetings as required by the progress of the work.

2. **ATTENDANCE**

The following people should attend progress meetings, as applicable:

- Project Manager
- City Inspector Contractor
- Subcontractors as appropriate to the Agenda Suppliers as appropriate to the Agenda Others as appropriate

3. **PROGRESS SCHEDULE**

The Contractor shall submit a detailed schedule before work is to be started. It shall indicate the sequence of the work, the time of starting and completing each part.

4. **SUGGESTED AGENDA**

- Review approval of minutes of previous meetings. Review of work progress.

Field observations, problems, and conflicts. Problems which impede the construction schedule. Review of off-site fabrication, delivery schedules.

- Corrective measures and procedures to regain projected schedule, if necessary. Revisions to construction schedule.
- Progress schedule during succeeding work period. Coordination of schedules.
- Review submittal -- expedite as required. Maintenance of quality standards.
- Pending changes and substitutions. Shop drawing submittals.
- Review proposed changes for:
  Effect on construction schedule and on completion date. Effect on other contracts of the project.
  Other business

[END OF PART II]

***P*ART III: TECHNICAL SPECIFICATIONS**

1. GENERAL

Furnish all necessary labor, equipment, and materials to construct various types of public services infrastructure projects as outlined in Part I General Requirements, 1. Introduction.

Tasks may involve milling existing asphaltic concrete surfaces to specified depths. Excess milled material should be transported to an asphalt reprocessing plant. The streets specified should be surfaced with Superpave asphaltic concrete mix. Additionally, tasks include necessary adjustments or replacements of existing structures, traffic control, sweeping, cleanup, placement of painted and thermoplastic pavement markings, and installation of curb, gutter, and sidewalks.

2. MOBILIZATION

A. The Contractor is solely responsible for providing security for all materials stored on- site during the construction activities.
B. The Contractor shall provide ten (10) calendar days notification to the Engineer prior to initiating mobilization to the site and initiating work. The Contractor will also provide copies of all permits that have been obtained to the engineer prior to initiating work associated with such permits.
C. The Contractor shall restrict their operations to the designated work area and ensure that construction activities do not disrupt normal operational activities of the City's services.

D. The Contractor is responsible for visually inspecting the site to note obstructions or access difficulties.

E. The Contractor is responsible for providing and/or maintaining access to the work site to facilitate all construction, inspection and testing activities.

F. The contractor shall deliver/post notifications to affected citizens and business owners seven (7) calendar days prior to construction. A form of the notification must be approved by the City prior to distribution.

3. MILLING

A. Furnish all necessary labor, equipment and materials to mill pavements as specified, and haul the milled material to the reprocessing plant.

B. The methods used for milling shall meet all applicable portions of Section 327 - Milling of Existing Asphalt Pavement, Florida Department of Transportation Standard Specifications for Road and Bridge Construction, latest revision.
C. All manhole castings and water valve boxes shall be adjusted and/or replaced by the Contractor, as specified, after milling is completed.

D. When the full street is required by these documents to be milled, the desired finished cross slope is to be 2%.

E. The unit price per square yard (SY) shall be full compensation for all work required to perform the milling, loading, hauling, sweeping, clean-up, and all incidentals necessary to complete the work specified in this section.

F. Milling of existing asphalt speed humps and speed tables is required as specified in the plans.

4. CONCRETE CURB AND GUTTER (INSTALLATION)

A. All Concrete Curb and Gutter work shall conform to the requirements of Section 520, "Concrete Gutter, Curb elements and Traffic Separator," of the FDOT Standard Specifications and placed in conformity with the lines, grades, dimensions and notes shown in the contract plans.

B. Forms for this work shall be made of either wood or metal and shall have a depth at least equal to the Plan vertical dimensions for the depth of the concrete being deposited against them. They shall be straight and free from warp or bends and of sufficient strength and rigidity, when staked, to resist the pressure of the concrete without deviation from line and grade. If wooden forms are used, they shall be of a cross-section approved by the Project Manager and shall have a flat surface on top. The Contractor shall use flexible forms for all curb and gutter constructed on a radius.

C. Excavation shall be to the required depth, and the foundation material upon which these items are to be placed shall be compacted as specified in Section 120-9, "Compaction Requirements" of the FDOT Standard Specifications.

D. The concrete shall be placed in the forms and tamped and spaded in place so that all honeycombs will be eliminated, and sufficient mortar brought to the surface. The top of the section shall be floated smooth, and its edges rounded to the radius shown on the plans. No concrete shall be placed during unfavorable weather conditions.

E. Except for machine placed concrete, at the option of the Contractor, joints may be formed by the use of dummy joints (either formed or sawed) or by the use of sheet metal templates. If sheet metal templates are used, they shall be at least as long as the depth of the curb section. They shall be set perpendicular to the top and face of the curb form and shall be held firmly in place during the placing of concrete. Templates shall remain in place until the concrete has set sufficiently to hold its shape, but shall be removed while the forms are still in place.

For machine placed concrete, unless an alternate method is approved by the Project Manager, contraction joints shall be sawed. The joints shall be sawed as soon as the concrete has hardened to the degree that excessive raveling will not occur and before uncontrolled shrinkage cracking begins.

Contraction joints shall be spaced at intervals of ten feet (10') except where a lesser interval is required for closure, but no section shall be less than four feet (4') in length. On medians and traffic separators, cuts shall align across from each other. Cuts shall also align with contraction joints of sidewalks adjacent to the curb.

Expansion joints shall be constructed at all structures, at all ends of curb returns, except that expansion joints shall not be constructed within twenty (20) feet of an island nose. They shall be located at intervals of 500 feet between other expansion joints or ends of a run. The expansion joint filler shall be ½ inch in width and shaped to the cross section of the curb.

F. The forms shall be removed within twenty-four (24) hours after the concrete has been placed, and minor defects then filled with mortar composed of one part of Portland cement and two parts of fine aggregate. Plastering will not be permitted on the face of the curb or the gutter. Any rejected curb and gutter shall be removed and replaced at no additional cost to the City. All exposed surfaces shall be given a brush finish while the concrete is still green. For any surface areas, however, which are too rough or where other surface defects make additional finishing necessary, the Project Manager may require that the curb be rubbed to a smooth

surface with a soft brick or wood block, with water used liberally. Also, if necessary further to provide a suitable surface, the Project Manager may require additional rubbing, using a thin grout or mortar, either of which additional rubbing shall be at no additional cost to the City.

G. When surface finishing is completed, the curb and gutter shall be cured per applicable paragraphs of Section 520-8, of the FDOT Standard Specifications.

H. After the concrete has set sufficiently, but not later than three (3) days after pouring, the spaces in front and back of the curb and gutter sections shall be refilled to the required elevation, with suitable material, adequately compacted. In sections where sidewalk is to abut the curb, the backfill shall be placed and compacted to a suitable depth for the placing of sidewalk forms. In all other sections of the work, the back of the curb shall be backfilled to the required elevation with suitable material, which shall be placed and thoroughly compacted in layers of not more than six inches (6") in thickness.

I. Where a base is to be constructed adjacent to a curb and gutter, the curb and gutter shall be properly backfilled and shall set for a period of not less than seven (7) days before any base material is placed against it.

J. The top and face of the finished curb and gutter shall be true and straight, and the top surface of curbs shall be uniform width, free from humps, sags, or other irregularities. When a straightedge ten feet (10') long is laid on the top or face of the curb or on the surface of gutters, the surface shall not vary more than 0.01 foot from the edge of the straightedge, except at grade changes or curves.

K. Full compensation for conforming to the requirements of this Section shall be considered as included in the unit price paid per linear foot (LF) for constructing concrete curb, curb and gutter, or valley gutter, complete in place and accepted, and no additional compensation will be allowed therefore.

5. CONCRETE SIDEWALKS (INSTALLATION)

A. All Concrete Sidewalk work shall conform to the requirements of Section 522, "Concrete Sidewalks and Driveways", of the FDOT Standard Specifications and these Special Provisions and placed in conformity where so ordered by the Project Manager.

B. Forms for this work shall be made of either wood or metal and shall have a depth at least equal to the Plan vertical dimensions for the depth of concrete being deposited against them. They shall be straight, free from warp or bends, and of sufficient strength and rigidity, when staked, to resist the pressure of the concrete without deviation from line and grade. If wooden forms are used, they shall be of cross-section approved by the Project Engineer and shall have a flat surface on top. The Contractor shall use flexible forms for all headers constructed on a radius.

C. Tree roots within the sidewalk area shall be removed to a minimum depth of one foot (1') below the specified subgrade surface. If a contractor must cut tree roots, sharp cuts shall be made. All roots greater than 2” shall be cut clean with a hand saw. The contractor shall hand dig near the roots and saw the roots, heavy mechanical equipment shall not be used. Broken roots shall be sawed 2” behind the ragged end. Roots smaller than 2” may be cut with a sharp-edged hand tool. Crushed or torn roots are more likely to allow decay. Sharply cut roots produce a flush of new roots helping the tree to recover from its injury. If tree roots larger than 6” must be cut, the Contractor shall inform the City Engineer or his representative prior to cutting for field direction. All boulders, organic material, soft clay, spongy material and any

other objectionable material shall be removed and replaced with material approved by the Engineer.

Before placing the forms for sidewalks, the surface upon which they are to be built shall be brought to the specified line, grade and elevation and uniformly compacted to a minimum 85 percent of AASHTO T-99 density. The materials shall be compacted at a moisture content such that the specified density can be uniformly attained. If necessary to attain the specified density, water shall be added to the material, or the moisture content shall be lowered by manipulation or allowing the material to dry, as is appropriate.

Fill areas including cut areas under the sidewalk which have been excavated more than six inches (6") below the bottom of sidewalk shall be compacted to a minimum of 95 percent of AASHTO T-99 density. The area to be compacted is defined as that area directly under the sidewalk and one foot (1') beyond each side of the sidewalk when right-of-way allows.

D. Transverse expansion joints shall be placed at intervals not exceeding eighty feet (80'), and at all places where a walk intersects or abuts a curb, driveway, building, other sidewalk or fixed objects. Expansion joints shall be constructed at each side of structures and at ends of curb returns, except that expansion joints shall not be constructed within twenty feet (20') of an island nose. Expansion joints shall be filled with ½ inch thick premolded joint filler conforming to the provisions in Section 932 of the Standard Specifications. The joint filler shall be shaped to the cross section of the sidewalk, shall extend from the surface to the subgrade, and shall be at right angles to the sidewalk surface.

   Contraction joints shall be sawed and shall be at intervals of four (4) to six (6) feet, or as shown on the plans. A slot approximately 3/16 inches wide and not less than 1 ½ inches deep shall be cut with a concrete saw after the concrete has set, and within twenty-four (24) hours of concrete being poured. Open type joints shall not be allowed.

E. Just prior to placing the concrete, the subgrade shall be moistened. The concrete shall be placed in the forms and tamped and spaded in place so that all honeycombs will be eliminated and sufficient mortar brought to the surface. Thereafter, the surface shall be brought to a smooth even finish by means of a wooden float. No concrete shall be poured during unfavorable weather conditions.

F. The concrete shall be given a broom finish. The top of the finished sidewalk shall be true and straight, and the top surface of sidewalks shall be uniform width, free from humps, sags, or other irregularities. When a straightedge ten feet (10') long is laid on the top of the sidewalk the surface shall not vary more than 0.01 foot from the edge of the straightedge, except at grade changes or curves.

G. When surface finishing is completed, the sidewalk shall be cured per applicable paragraphs of Section 520-8, of the Standard Specifications. After concrete has set sufficiently, but no later than three (3) calendar days after pouring, the space alongside the sidewalk shall be backfilled, compacted and sodded or seeded as shown on the striping plans.

H. Full compensation for conforming to the requirements of this Section shall be considered as included in the unit price paid per Square Yard for constructing sidewalks, complete in place and accepted, and no additional compensation will be allowed therefore.

6. LEVELING/RESURFACING

A. **Material:**

1. The material used for leveling shall be Superpave asphaltic concrete.

2. The material used for resurfacing shall be Superpave asphaltic concrete. Friction Course mixes may be used as specified by the City Project Manager.

B. **Construction Requirements:**

1. The leveling and resurfacing shall commence within three (3) working days after the milling of each street. The time limit for streets where castings or other water valve boxes need to be adjusted or replaced will be three (3) working days after the casting or water valve box has been adjusted or replaced.

2. The methods used for re-paving shall meet all applicable portions of Section 330 - Hot Mix Asphalt General Construction Requirements, Florida Department of Transportation Standard Specifications for Road and Bridge Construction, latest revision.
3. The Contractor shall contact all utility and TV cable companies for location of their facilities. The exact location of their facilities, type of material used by the utility and TV cable, etc. shall be determined by the Contractor prior to any excavation work required by this Contract.

4. The Contractor shall be responsible for the protection of all pavements, sidewalks, and other improvements within the work area. All damage to such improvements, as a result of the Contractor's operations, beyond the limits of the work of pavement replacement as described herein, shall be repaired by the Contractor at the Contractor's expense.

5. Testing by City: Testing may be completed by an independent testing laboratory. If core borings are done to determine thickness and density, the Contractor is responsible for filling these holes in the pavement.

C. **Quality Control:**

1. The Contractor shall have a Quality Control Technician who has been certified by the State of Florida Department of Transportation as a Certified Asphalt Plant Technician, available at the asphalt plant at all times the Contractor is producing asphalt mix for use on this project.

2. The Contractor's quality control procedures, inspection and tests shall be documented, and that information shall be available for review by the Project Manager or his representative, throughout the course of the Contract.

3. The mix design shall meet the requirements of Section 334-3.2 for the type of Superpave asphalt indicated in the plans as set forth in Florida Department of Transportation Standard Specifications for Road and Bridge Construction, latest revision. Friction course asphalt concrete must meet the requirements of Section 337 for the type of friction course indicated in the plans. Submit a Notarized Certification of Specification Compliance letter on company letterhead to the Engineer stating that all material produced and placed on the project was in substantial compliance with the specifications. The City may run independent tests during the project to determine the acceptability of the material.

7. UTILITY ADJUSTMENTS & REPLACEMENTS

A. **Adjusting Existing City Valve Boxes:**

1. The Contractor is to provide the necessary equipment to adjust the castings without damaging the existing structure. Adjustment would include being able to screw the top portion of the valve box up or down. Water valves that cannot be adjusted either up or down must be replaced under Section 6.2. If the structure is damaged, the Contractor is to replace the structure to its original condition at their cost.

2. The materials and construction methods for this work shall conform to applicable portions of Section 425 Inlets, Manholes and Junction Boxes, Florida Department of Transportation Standard Specifications for Road and Bridge Construction, latest revision.

3. The quantities to be paid for under this section shall be for the number of valve boxes, adjusted physically.

4. Structures, sections of structures, valve box sections or other items necessary for adjustment that are considered debris and that has been removed by the Contractor as part of the progress of work shall be removed from the project site by the Contractor at the end of each day's work. The Contractor is to remove all debris deposited in the structure as a result of the work performed.

B. **Castings:**

1. The Contractor shall notify the Project Manager or his representative on any questions regarding the prior adjustment or replacement of manhole frames or valve boxes.

2. Manhole frame and covers and valve boxes to be replaced are to be furnished by the Contractor.

3. Castings damaged by construction shall be replaced at no additional cost to the City of St Pete Beach.
4. All castings shall be adjusted and replaced in accordance with the manufacturers recommended requirements.

5. Adjusted or replaced castings shall be set at the grade of the proposed asphalt after compaction with not more than ¼" variation in 10 feet.

8. STRIPING AND MARKINGS

A. **Temporary Striping**: Temporary traffic stripes and markings will be required. Temporary markings shall be placed immediately after milling on any arterial/collector roads or within the immediate proximity of a school, and immediately after final asphalt on all roads. Before opening any re-paved area to traffic, temporary markings shall be applied as specified by the Project Manager. The paint used for this work shall be in accordance with the FDOT specification.

B. **Permanent Striping**: The Contractor shall place permanent traffic stripes and markings in accordance with reference points and alignment gathered by the Contractor prior to milling or overlay or in accordance with striping plans provided by the City of St Pete Beach. The Contractor shall use an Alkyd/Maleic thermoplastic compound and application methods meeting the requirements of Section 711 – Thermoplastic Pavement Markings, Florida Department of Transportation Standard Specifications for Road and Bridge Construction, latest revision. The thermoplastic compound shall be extruded on the pavement surface in a molten state by mechanical means with surface application of glass spheres, and upon cooling

to ambient pavement temperature shall produce an adherent pavement marking of the specified thickness and width and capable of resisting deformation.

C. A minimum of 21 days curing time after asphalt placement shall be allowed before the placement of any thermoplastic marking commences, with all thermoplastic markings to be completed within 28 days after asphalt placement.

D. The color of the thermoplastic shall be white, yellow, or blue as specified by the M.U.T.C.D.; and revisions thereof.

9. CLEANUP AND DUST CONTROL

A. The Contractor shall furnish and operate a minimum of one (1) mechanical sweeper for the purpose of removal of loose milled material. After milling and before resurfacing, the Contractor shall water the streets as necessary to prevent dust nuisance from his operations or from traffic.

B. Upon completion of the work on each street and before acceptance, the Contractor shall remove all surplus and discard materials and rubbish; shall restore in an acceptable manner all property, both public and private, which has been damaged during the prosecution of the work and shall leave each street in a neat and presentable condition throughout the entire length of the work under Contract. This shall include, but not be limited to the overspray of tack, and shall be completed within one (1) week after the resurfacing of each street.

C. Failure of the Contractor to comply with the Project Manager cleanup orders may result in an order to suspend work until the condition is corrected. No additional compensation will be allowed as a result of such suspension.

D. 5% of the value of the work performed may be retained, should at the opinion of the City, restoration not be completed.

E. The cost of all work regarding Cleanup and Dust Control shall be included in the prices for other pay items, which are included in the Contract.

F. The Contractor shall reflect in the schedule, which shall be approved prior to construction, the time required for complete restoration. The Contractor shall strictly adhere to the schedule.

G. The Contractor shall take the necessary measures to prevent siltation and other construction related materials including tack coatings from entering storm inlet structures and manhole structures during the road repaving operation.

10. TRAFFIC CONTROL, STREET CLOSURES, DETOURS AND BARRICADES

A. The Contractor shall comply with all applicable portions of Section 102 – Maintenance of Traffic – Florida Department of Transportation Standard Specifications for Road and Bridge Construction, latest revision, and City requirements for traffic control.

B. The Contractor shall furnish all necessary barriers, lights, signs, and flag persons, to advise the public of detours and construction hazards. All flag persons on site shall be properly qualified.

C. The Contractor shall be responsible for compliance with additional public safety requirements, which may be ordered by the Project Manager or his authorized representative.

D. Failure of the Contractor to comply with the public safety requirements may result in an order to suspend work until the condition is corrected. No additional compensation will be allowed as a result of such suspension.

E. The Contractor shall furnish and install, and upon completion of the work, promptly remove all signs and warning devices.

11. SODDING

A. **Description:** All sodding shall conform to the requirements of Section 570, FDOT Manual on Road and Bridge Construction, latest revision.

B. **Materials:**

1. **Sod:** Sod shall be Argentine Bahia as determined by the Project Engineer. Where sodding will adjoin, or be in sufficiently close proximity to, private lawns, other types of sod may be used if desired by the affected property owners and approved by the Project Engineer. The sod shall be taken up in commercial-size rectangles, preferably 12-inch by 24-inch or larger. Maximum allowable deviation from the standard widths and lengths shall be five percent (5%). Broken pads and torn or uneven ends will not be acceptable. The sod shall be sufficiently thick to secure a dense stand of live grass. The sod shall be live, fresh and uninjured, at the time of planting. It shall have a uniform soil thickness of three-fourths inch (3/4"), plus or minus one-fourth inch (1/4"), at the time of cutting. Measurement for thickness shall exclude top growth and thatch. The soil mat shall adhere firmly to the roots such that it will not break, crumble, or tear during handling and placing. No muck or heavy peat soil grown sod will be accepted. All sod shall be 97% free of weeds and other grasses. All sod shall comply with State and Federal laws with respect to inspection for plant diseases and insect infestation. An inspection certificate, required by law, may be requested by the Project Engineer for each shipment. All sod shall be placed as soon as possible after being dug and shall be shaded and kept moist from the time it is dug until it is planted. No sod which has been cut for more than 48 hours may be used unless specifically authorized by the Project Engineer.

2. **Commercial Fertilizer:** All commercial fertilizers shall comply with the State fertilizer laws. All fertilizers shall be uniform in composition, free flowing and suitable for application by mechanical spreader equipment. The chemical designation of the fertilizer shall be 12-8-8 or equivalent ratio. At least 50% of the phosphoric acid shall be from normal super phosphate or an equivalent source which will provide a minimum of two units of sulfur. The amount of sulfur shall be indicated on the quantitative analysis card attached to each bag or other container.

3. **Water:** The water may be obtained from any approved spring, pond, lake, stream or municipal water system. The water shall be free of excessive and harmful chemicals, acids, alkalies, or any substance which might be harmful to plant growth or obnoxious to traffic. Salt water shall not be used. The Contractor shall pay for all water used for the installation of sod.

C. **Construction Methods:**

1. **Soil Moisture:** Rough and fine grading shall be carefully executed to ensure that the final placed sod will conform to existing grades, free of depressions, “bird baths” or

bumps. The area on which sod is to be placed shall contain sufficient moisture for optimum results. During periods of high temperature and after all unevenness in the soil surface has been corrected, the soil shall be lightly irrigated immediately prior to laying the sod. Muddy soil shall not be created.

2. **Placing Sod:** The first row of sod shall be laid in a straight line with subsequent rows placed parallel to and tightly against each other. Lateral joints shall be staggered to promote more uniform growth and strength. Care shall be exercised to ensure that the sod is not stretched or overlapped and that all joints are butted tight in order to prevent voids which would cause air drying of the roots. The sod shall form a solid mass. The sod shall be firmly embedded by light tampering and rolling to ensure contact with the subgrade and to provide a smooth, even surface to eliminate voids under the root system making dry spots. The sod shall be staked on all slopes of 2:1 or steeper with pegs or similar material, driven through the sod blocks, six inches (6") into firm earth at suitable intervals.

3. **Watering:** The sod shall be watered with a fine spray immediately after placing, such that the underside of the new sod pad and soil immediately below the sod are thoroughly wet. The sod shall be kept in moist condition for the duration of the contract period (and in no case less than 4 weeks except in dry season it shall be 8 weeks). The moistened condition shall extend to at least to the full depth of the rooting zone. Water shall not be applied between the hours of 10:00 a.m. and 6:00 p.m.

D. **Maintenance:** The Contractor shall, at no additional expense to the City, maintain the sodded areas in a satisfactory condition until final acceptance of the project. Such maintenance shall include the filling, leveling, and repairing of any washed or eroded areas, as deemed necessary by the Project Engineer. The Project Engineer, at any time, may require resodding of any areas in which the establishment of the grass stand does not appear to be developing satisfactorily. The Contractor shall mow lawns as soon as there is enough top growth to cut with mower set at height of two inches (2") and shall repeat mowing as required throughout the duration of the project, to maintain such height. The Contractor shall not delay mowing until grass blades bend over and become matted and shall not mow when grass is wet.

E. **Measurement and Payment:** Full compensation for conforming to the requirements of this Section shall be considered as included in the unit price paid per square yard (SY) for furnishing, placing, maintaining and replacing sod, complete in place and accepted, and no additional compensation will be allowed therefore.

[END OF PART III]

SECTION 01425
FDOT STANDARDS REFERENCE

PART 1 GENERAL

1.01 Section Includes

Instruction on the use and applicability of FDOT standards on the project

1.02 Requirements

A. The Florida Department of Transportation, Standard Specifications for Road and Bridge Construction, latest non-metric edition ("Standard Specifications"), and Standard Plans for Road Construction, latest non-metric edition ("Standard Plans") are referenced herein as source documents for applicable technical specifications and construction details to be used in the construction of this project. The term “latest edition” refers to the latest edition implemented by FDOT and includes all FDOT implemented supplements at the time of bid advertisement.

B. Method of Measurement and Basis of Payment is to be in accordance with the Florida Department of Transportation Standard Specifications. Any item which is detailed in the Plans and for which material types, sizes and quality are also called out, the "Standard Plans" shall take preference over the plan detail unless otherwise directed by the Engineer.

C. Where the FDOT Standard Specifications use the reference "Department", replace "Department" with "Owner", except for when such reference is to Department Standards and evaluation criteria.

D. The Standard Plans are referenced herein as a source document for applicable construction items and details called for in the plans for which a specific plan detail is not provided. The Contractor shall construct the items called for in the plans in accordance with the "Standard Plans" unless otherwise defined or detailed in the plans or as directed by the Owner, Engineer or authorized representative.

E. The Standard Plans are available for download from the FDOT website at: https://www.fdot.gov/design/standardplans

F. In case of conflict, the Technical Specifications takes precedence over FDOT specifications for a particular construction requirement.

G. Copies of the latest implemented edition and implemented supplements of the Florida Department of Transportation Standard Specifications are available for download from the FDOT website at: https://www.fdot.gov/programmanagement/Implemented/SpecBooks

H. The Contractor shall inform the Owner and Engineer in writing of any specification that the Contractor feels is ambiguous or conflicting with other plan notes and details prior to the construction of the associated item. The Engineer will determine which information is to be used for construction. The Contractor is responsible for the removal and replacement of any item improperly constructed resulting from a misinterpretation of the specifications at no additional cost to the Owner.

PART 2 PRODUCTS - Not Used

PART 3 EXECUTION

3.01 General

The Contractor shall use Divisions Two (II) and Three (III) of the FDOT Specifications as they relate to methods of construction and material types and quality for the appropriate construction items contained within this project.

END OF SECTION

III. BID FORM

See attached Excel document.

IV. GENERAL CONTRACT TERMS

REQUEST FOR PROPOSALS
Civil On Call Construction Services

REQUEST FOR PROPOSAL SUMMARY
The City of St Pete Beach has issued this Request for Proposal (RFP) to solicit competitive bids and proposals from Proposers for a Task Work Order driven Civil On-Call Construction Services Contract. The successful bidder shall provide all labor, materials, equipment, tools, consumables, transportation, and incidentals to provide Public Services capital improvement projects construction services on an 'as needed' basis for the City of St Pete Beach.

The "City" intends to **award multiple contracts** to vendors who can provide the best value for services. Vendors may submit proposals for all, some, or only one of the requested line items or categories. **It is not mandatory to submit a proposal for every item listed**. A bidder may bid on any, all, or none of the items. The "City" reserves the right to select multiple vendors to optimize cost-efficiency and capability across different segments of the project. Proposals will be evaluated based on capability, cost, and capacity to perform the specific line items requested.

PROPOSAL SUBMITTALS
Proposal documents must include a signed/notarized Contractor's Proposal Submittal, Bid Form, References, Contractor's license and insurance certificates, and Public Entity Criminal Affidavit. The Contractor shall submit electronic proposals only. Bidders must submit electronically only through Bonfire platform. When bidding electronically, only one copy should be submitted.

Proposals shall include the following:

- A signed and notarized Proposer's Contract Proposal.
- Current proof of insurance certificate.
- A list of references and minimum qualifications as outlined in Section V.
- One copy of bid electronically submitted to Bonfire platform.

The City is not responsible for any Addendums or other supplementary information that is not received due to non-submittal of the aforementioned information. Please refer back to the city website (http://www.stpetebeach.org/news-and-links/city-projects.html) for additional project information as it becomes available. The City reserves the right to decide whether to answer addendums or not. The City is not required to provide any additional information.

Proposers or persons wishing to submit a proposal on this project shall be licensed, and insured in accordance with the City's requirements

The City of St. Pete Beach reserves the right to reject any or all proposals or parts of proposals, or accept any proposal or part thereof deemed to be in the best interests to the City of St. Pete Beach.

Electronic proposals must be submitted by **9:00 AM on April 08, 2026 (Deadline),** clearly marked as: **"Civil On Call Construction Services."**

PRE-PROPOSAL MEETING
An optional pre-proposal meeting will be held on **March 18, 2026 at 10:00 AM EST** via Microsoft Teams conference/Teleconference. Please contact the City's Procurement Manager (purchasing@stpetebeach.org) for a meeting invitation and instructions.

WRITTEN REQUESTS FOR INTERPRETATIONS/CLARIFICATIONS
No oral interpretations will be made to any firms as to the meaning of the scope of work or any other

contract documents included in this **RFP.** All questions pertaining to the terms and conditions or scope of work of this Request for Proposal **(RFP)** must be sent in writing via email only to the City Procurement Manager (purchasing@stpetebeach.org) and shall be received no later than **10:00 AM EST on March 25, 2026.** Responses to questions may be handled as an Addendum if the response would provide clarification to the requirements of the **RFP**. All such Addenda shall become a part of the contract documents. The City will not be responsible for any other explanation or interpretation of the proposed **RFP** made or given prior to the award of the contract. The City will not respond to questions received after the specified deadline. The City reserves the right to respond to any and all questions but is not required to do so. If the Proposer discovered the opportunity through the online platform (Bonfire), do not submit questions through these platforms. **Only questions emailed directly to the City Procurement Manager will be answered.**

BEGINNING DATE
The Proposer shall, within ten (10) business days after receipt of the Notice of Award and before commencement of any operations hereunder, execute the Agreement. Additionally, the Proposer shall, within twenty (20) business days after receipt of the Notice of Award, provide all required documentation to the City.

COMPLETION OF WORK
The work will be completed on an as-needed basis. Each location that needs to be surveyed, repaired and/or worked on will constitute it's own "job". This will be a three (3) year initial contract with the option to be extended for two (2) additional one (1) year periods upon mutual consent of both parties. It is the intent of the City of St Pete Beach to award these services to more than one Contractor/Vendor.

COSTS INCURRED BY PROPOSERS
All expenses involved with the preparation and submission of proposals to the City, or any work performed in connection therewith, shall be borne solely by the Proposers. No payment will be made for any responses received or for any other effort required of or made by; the Proposer's prior to contract commencement.

ORAL PRESENTATION
The City may require an oral presentation of the proposal at the Evaluation Committee's discretion. This could also include a formal interview of any and all members of the Proposer's contract management staff.

CONFLICT OF INTEREST
The Proposer represents that it presently has no interest and shall acquire no interest, either direct or indirect, which would conflict in any manner with the performance or services required hereunder, as provided for in FL Stat. 112.311. The Proposer further represents that no person having any interest shall be employed for said performance.

The Proposer shall promptly notify the City's representative, in writing, by certified mail, of all potential conflicts of interest for any prospective business association, interest, or other circumstance, which may influence or appear to influence the contractor's judgment or quality of services being provided hereunder. Such written notification shall identify the prospective business association, interest or circumstance, the nature of work that the Proposer may undertake and request an opinion of the city as to whether the association, interest or circumstance would, in the opinion of the City, constitute a conflict of interest if entered into by the Proposer. The City agrees to notify the Proposer of its opinion by certified mail within thirty days of receipt of notification by the Proposer.

LATE PROPOSAL OR MODIFICATIONS
Modifications in writing received prior to the time set for the proposal submittal will be accepted. Proposal modifications received after the time set for the proposal submittal will not be considered.

RELATED PARTIES AND MULTIPLE PROPOSALS

Where two (2) or more related parties each submit a proposal or multiple proposals are received from (1) Proposer, for any such contract, such proposals shall be judged non-responsive. Related parties mean Proposers or the principles thereof, which have a direct or indirect ownership interest in another Proposer for the same contract or in which a parent company or the principles thereof where one (1) Proposer has a direct ownership interest in another Proposer for the same contract.

RIGHT TO AUDIT
The City of St. Pete Beach reserves the privilege of auditing a Proposer's record as such records relate to purchases or work between the City and said Proposer. Records should be maintained for three years from contract date.

VARIANCE FROM STANDARD TERMS & CONDITIONS
All standard terms and conditions stated throughout the RFP apply to this contract except as specifically stated. This should be fully understood by Proposers prior to submitting a proposal.

ASSIGNMENT
The Proposer shall perform this contract. No assignment or subcontracting shall be allowed without prior written consent of the City. If a Proposer intends to subcontract a portion of this work, the Proposer must disclose that intent in the proposal. In the event of a corporate acquisition and/or merger, the Contractor shall provide written notice to the City within thirty (30) business days of Proposer's notice of such action or upon the occurrence of said action, whichever occurs first. The right to terminate this contract, which shall not be unreasonably exercised by the City shall include but not be limited to, instances in which a corporate acquisition and/or merger represent a conflict of interest or are contrary to any local, state, or federal laws. Action by the City awarding a proposal to a firm that has disclosed its intent to assign or subcontract in its response to the RFP, without exception shall constitute approval for purpose of this Agreement.

LOBBYING Lobbying of Evaluation Committee members, City employees, or elected officials regarding request for proposals, request for qualifications, bids or contracts, during the pendency of bid award or bid protest, by the bidder/proposer/protestor or any member of the bidder's/proposer's/protestor's staff, an agent of the bidder/proposer/protestor, or any person employed by any legal entity affiliated with representing an organization that is responding to the request for proposal, request for qualification, bid or contract, or has a pending bid protest is strictly prohibited either upon advertisement or on a date established by the City and shall be prohibited until either an award is final or the protest is finally resolved by the City Manager or Procurement Manager; provided, however, nothing herein shall prohibit a prospective bidder/proposer from contacting City departments to address situations such as clarification and/or questions related to the procurement process. For purposes of this provision, lobbying activities shall include but not be limited to, influencing or attempting to influence action or non-action in connection with any requests for proposal, request for qualification, bid or contract through direct or indirect oral or written communication or an attempt to obtain goodwill of persons and/or entities specified in this provision. Such actions may cause any request for proposal, request for qualification, bid or contract to be rejected.

ADDITIONAL REQUIREMENTS
The City reserves the right, by change order, to unilaterally add or delete locations/services, either collectively or individually, at the City's sole option, at any time after award has been made as may be deemed necessary or in the best interest of the City. In such case, the Proposer will be required to provide or reduce services to this contract in accordance with the terms, conditions, and specifications.

SERVICES AGREEMENT
A written agreement incorporating the RFP and the successful proposal will be prepared by the City, signed by the successful Proposer, and presented to the City Commission for approval and signature.

INTEGRITY OF REQUEST FOR PROPOSAL DOCUMENTS
Proposers shall use the original RFP forms provided within the RFP and enter information in the spaces where a response is requested. Proposers may use an attachment as an addendum to the RFP forms if sufficient space is not available on the original form for the Proposer to enter a complete response. Any modifications or alterations to the original RFP documents by the Proposer, whether intentional or otherwise, will constitute grounds for rejection of the RFP. Any such modifications or alterations a Proposer wishes to propose must clearly be stated in the Proposer's RFP response and presented in the form of an addendum to the original RFP documents.

RESPONSIBILITY OF THE CITY MANAGER OR DESIGNEE
The term "City Manager or designee" wherever used in this Contract shall be the City of St. Pete Beach or its duly authorized representative. Notices of any change in the City Manager or designee shall be given in writing by the City to the Contractor. The City Manager or designee shall have full authority to interpret the contract and requirements and shall determine acceptance of the work under this Contract and every question relative to the fulfillment of the terms and provisions therein. It shall be the duty of the City Manager or designee to enforce the contract terms in a fair and unbiased manner.
If a variation from any requirements is allowed, the City Manager or designee shall grant the same in writing with the reasons for his action outlined, and such action will not invalidate or change the Contract in any other manner.

EXAMINATION OF SITE
Proposer shall carefully examine project site and be familiar with the work required for the project, investigate all site conditions that may affect execution of work as detailed in the construction documents. Contact the City's Procurement Manager or their designee for changes or alterations before proceeding.

ASSURANCES
The responding Proposer shall provide a statement of assurance that the Proposer is not presently in violation of any statutes or regulatory rules that might have an impact on the firm's operations. All applicable laws and regulations of the State of Florida, and ordinances and regulations of the City of St. Pete Beach will apply.

ASSIGNMENT AND TRANSFER OF CONTRACT
The Proposer shall not assign or transfer this Agreement or any part thereof or any interest therein without consent in writing of the City and the Proposer's Surety, and any such assignment or transfer without such written consent shall be null and void.

SUBCONTRACTS
The Proposer shall not subcontract this Agreement or any part thereof or any interest therein without consent in writing of the City and the Proposer's Surety. Any Subcontractor approved by the City will be subject to the same standards and qualifications as stated in this Contract.

PAYMENT
Payment shall be made to the Proposer for work performed under this Contract for the quantities of work as determined in accordance with Payments for Work Completed and Payments Withheld of this Contract. Payment for extra work will be made in accordance with the Changes in Work, Contract Amount, and Contract Time sections below.

PERIOD OF PERFORMANCE
The target completion for the base Scope of Services is January 2027, corresponding to delivery of the Design-Build Readiness Package. The City reserves the right, at its sole discretion and subject to funding

availability, to amend this Agreement to extend the Consultant's services through final (100%) design. Any additional services shall be authorized by written amendment and negotiated in accordance with the Consultants' Competitive Negotiation Act (Section 287.055, Florida Statutes).

CHANGES IN THE WORK

Without invalidating the Contract, the City may, at any time or from time to time, order additions, deletions or revisions in the work authorized by written Change Orders or directives. Upon receipt of a Change Order, the Proposer will proceed with the work involved. All such work shall be executed under the applicable conditions of the Contract documents. If any Change Order causes an increase or decrease in the Contract Amount or any extension or shortening of the Contract Time, an equitable adjustment will be made.

Additional Work performed by the Proposer without authorization of a Change Order will not entitle them to an increase in the Contract Amount or any extension of the Contract Time, except in the case of an emergency (subject to approval by City Manager or designee).

It is the Proposer's responsibility to notify their Surety of any changes affecting the general scope of the Work or change of the Contract Amount and the amount of the applicable bonds shall be adjusted accordingly, and an amended bond document furnished to the City. In the event the City directs the Proposer to make a change in the Work, and if the City and the Proposer do not arrive at a mutually acceptable increase or decrease in the Contract Amount, the Proposer shall not use any such lack of mutual acceptance as a basis or cause to stop or otherwise delay the progress or the execution and completion of any of the work ordered, directed or required pursuant to the Contract Documents.

If the Proposer believes an event or situation has occurred which justifies a change in the Contract Amount or Contract Time, they shall deliver a written notice to the City Manager or designee. Each such written notice shall be delivered promptly and no later than fifteen (15) business days after the Proposer first discovered the occurrence. The Proposer shall be deemed to have waived the right to collect any and all costs incurred more than fifteen (15) business days prior to the date of delivery of the written notice and shall be deemed to have waived the right to seek an extension of the Contract Time with respect to any delay in the Progress Schedule which accrued more than fifteen (15) business days prior to the date of delivery of the written notice.

Any such notice shall include sufficient detail to explain the basis of entitlement to a claim for an adjustment to the Contract Amount of Contract Time. When requested by the City Manager or designee, the Proposer shall furnish any additional information and details as may be required to determine the facts or allegations involved, which shall be provided within fifteen (15) business days of the request unless a longer time period is allowed by the City Manager or designee.

The Proposer shall prepare proposals detailing proposed adjustments to Contract Amount and/or Contract Time and submit them to the City Manager or designee within fifteen (15) business days of the City's issuance of a proposed Change Order or the Proposer's submitting a written notice of a change or claim for an adjustment to the Contract Amount or Contract Time. Proposer's proposals shall be irrevocable for a period of at least sixty (60) business days after receipt by the City. Any delay in the submittal of a complete, adequate and acceptable proposal will not justify an increase in Contract Amount or Contract Time. Proposer agrees that it shall give the City access to any and all of Proposer's and Subcontractors' books, records and other materials relating to proposed Change Orders and other claims for adjustment to Contract Amount or Contract Time.

CHANGE OF CONTRACT AMOUNT

The Contract Amount constitutes the total compensation payable to the Proposer for performing the Work. All duties, responsibilities and obligations assigned to or undertaken by the Proposer shall be at his expense

without change in the Contract Amount. The Contract Amount may only be changed by written Change Order issued by the City. Any claim for an increase in the Contract Amount shall be in writing and delivered to the City Manager or designee within fifteen (15) business days of the occurrence of the event giving rise to the claim.

All claims for adjustment in the Contract Amount shall be determined by the City Manager or designee. However, no claim for an adjustment to the Contract Amount will be considered for unforeseeable causes that were beyond the fault or negligence of the Proposer or his Subcontractors or supplier such as acts of God, floods, riots, etc. This restriction does not restrict submission of claims for additional Contract Time due to events of this nature. Any change in the Contract Amount shall be incorporated in a Change Order.

Proposer proposals or claims shall cover all aspects of the Work involved and shall be fully documented and itemized as to all costs, quantities and charges for overhead and profit. Amounts for Subcontractors or Suppliers at any tier shall be similarly supported. When determining Subcontractors' costs, the methods to be used shall be those used for the Proposer's costs, except that the term "Subcontractor" shall replace the term "Proposer," context permitting.

The value of any Work covered by a Change Order or of any claim for an increase or decrease in the Contract Amount where the Work involved is covered by unit prices contained in the Contract Documents shall be determined by application of unit prices to the quantities of the items involved. If the quantities originally contemplated are so changed in a proposed Change Order, that application of the Unit Prices to the quantities proposed will cause substantial inequity to the City or the Proposer, the applicable unit price(s) shall be equitably adjusted by mutual agreement.

If the value of work covered by a Change Order cannot be established or mutually agreed to utilizing previously established unit rates, the value shall be determined by the City on the basis of an estimate of the out-of-pocket cost and percentages that are acceptable to the City for overhead and profit.

In such case, the Proposer will submit in the form prescribed by the City an itemized cost breakdown together with supporting data.

The amount of credit to be allowed by the Proposer to the City for any such change which results in a net decrease in cost, will be the amount of the actual net decrease as determined by the City. When both additions and credits are involved in any one change, the combined overhead and profit shall be figured on the basis of the net increase, if any.

CHANGE OF CONTRACT TIME

The Contract Time may only be changed by written Change Order. Any claim for an extension in the Contract Time shall be in writing and include an analysis of the Progress Schedule as further described in the Specifications and shall be delivered to the City Manager or designee within fifteen (15) business days of the occurrence of the event giving rise to the claim. All claims for adjustment in the Contract Time shall be determined by the City Manager or designee. Any change in the Contract Time resulting from any such claim shall be incorporated in a Change Order. The Contract Time may be extended for an amount equal to time lost due to unforeseeable causes beyond the control of the Proposer (and his Subcontractors and Suppliers) if he makes a claim therefrom. Such delays shall include, but not be restricted to, acts or neglect by any separate Proposer employed by the City; fires; floods; labor disputes; epidemics; or acts of God.

All time limits stated in the Contract Documents are of the essence to the Contract. The stated time limits are agreed to be adequate to complete the work, including the procurement, manufacture and delivery of all material and equipment required, and account for any and all potential impact, delays, disruptions and costs that may be expected.

PAYMENTS FOR WORK COMPLETED
All payments under this agreement shall comply with the requirements of Florida Statutes, Section 215.422, commonly referred to as the "Prompt Payment Law." This includes timely processing of invoices and adherence to statutory interest provisions for late payments. The Contractor shall submit detailed invoices for services rendered under this agreement. Each invoice must include: Purchase Order or Contract Number, Description of services provided, Dates of service, Total amount due. Payment will be made within 45 days of receipt of a proper invoice and acceptance of deliverables, as required by Florida law. If payment is not made within the statutory timeframe, interest penalties will apply in accordance with Section 215.422, Florida Statutes. Payments will be issued via electronic funds transfer (EFT) unless otherwise agreed in writing. Contractor must provide accurate banking information to facilitate EFT.

PAYMENTS WITHHELD
The City Manager or designee may withhold, or, on account of subsequently discovered evidence, nullify the whole or part of any estimate to such extent as may be necessary to protect the City from loss on account of:

a) Defective work not remedied

b) Claims and/or liens filed or reasonable evidence indicating probable filing of claims

c) Failure of the Proposer to make payments properly to Subcontractors or for labor

d) A reasonable doubt that the Contract can be completed for the balance then unpaid

e) Damage to another Proposer

f) Failure of the Proposer to keep their work progressing in accordance with their time schedule

FINAL PAYMENTS
Upon the completion and acceptance of the work, the City Manager or designee shall issue a certificate that designates that the whole work provided for in this Contract has been completed and accepted by him under the conditions and the terms thereof and shall make the final estimate of the work. After issuance of the certificate, the entire balance found to be due the Proposer, including said retained percentage by the City in accordance with existing state laws as may be retained lawfully by said City, shall pay excepting such sums to the Proposer.

Before the approval of the final payment, the Proposer shall submit evidence satisfactory to the City that states that all payrolls, materials, bills and outstanding indebtedness in connection with this Contract have been paid.

LIENS
If at any time there shall be evidence of any lien or claim for which the City might become liable and which is chargeable to the Proposer, the City shall have the right to retain out of any payment then due or thereafter to become due, an amount sufficient for complete indemnification against such lien or claim. In the event the City has already paid to the Proposer all sums due under this contract or the balance remaining unpaid is insufficient to protect the City, the Proposer and his Surety shall be liable to the City for any loss so sustained.

RESPONSIBILITY OF THE CITY MANAGER OR DESIGNEE
The term "City Manager or designee" wherever used in the Contract shall be the City of St. Pete Beach or its duly authorized representative. Notices of any change in the City Manager or designee shall be given in writing by the City to the Proposer. The City Manager or designee shall have full authority to interpret the Plans and Specifications and shall determine the amount, quality, and acceptance of the work and supplies

to be paid for under the Contract and every question relative to the fulfillment of the terms and provisions therein. It shall be the duty of the City Manager or designee to enforce the Plans and Specifications in a fair and unbiased manner. If a variation from any requirements is allowed the City Manager or designee shall grant the same in writing with the reasons for his action outlined, and such action will not invalidate or change the Contract in any other manner.

LICENSES AND PERMITS

The Proposer shall obtain and pay for all necessary City licenses and work permits and shall faithfully comply with all laws, ordinances and regulations, (Federal, State or local) which may be applicable to the operations to be conducted hereunder, except for those permits obtained by the City. Notwithstanding the provisions above, the Proposer is responsible for non-compliance of all permit requirements, including all fines resulting from Proposer's non-compliance of said requirements.

Chapter II, Section II-4, "Registration of Licenses Obtained From Other Municipalities:" "Persons, partnerships, corporations, or other business entities doing business with the City who are not required to obtain a City occupational license, but who must have either a State or County or Municipal occupational license from another municipality, shall register such occupational license with St. Pete Beach Community Development Department. The City may charge a fee for such registration." The Proposer shall be responsible for obtaining all City, County, State and Federal permits required by those government agencies and must provide documentation of receipt of those permits prior to project commencement. This shall include a notice to commence work letter and the applicable fee, if required. Any sub-contractor hired by the Proposer awarded the project, MUST also register their license with the City.

LABOR PROVISIONS

The Proposer and his Subcontractors shall discharge, whenever ordered to do so by the City Manager or designee, any employee who is disorderly or whose conduct in the opinion of the City Manager or designee is detrimental to the prosecution of the work. No person whose age or physical condition is such as to make this employment dangerous to his/her health and safety or to the health and safety of others shall be employed on the work, and in no event shall any persons under the age of sixteen (16) years be employed. The State of Florida prevailing wage law requires that the Proposer shall fully comply with all provisions contained in Section 215.19, "Schedule of Prevailing Wage Rates for Specified Public Construction." The wage rates set forth by such determination shall apply to this project.

INSURANCE

The Proposer shall procure and maintain at his/her own expense, during the life of the Contract, liability insurance as hereinafter specified. All such insurance shall be subject to the approval of the City for adequacy of protection and shall include a provision preventing cancellation without twenty (20) business days prior notice to the City in writing. The City shall be included as an additional insured on all liability insurance. The liability insurance required is as follows: Proposer's General Public Liability and Property Damage Insurance issued to the Proposer and protecting the Proposer from all claims for personal injury, including death, and all claims for destruction of or damage to property, arising out of or in connection with any operations under this Contract, whether such operations be by the Proposer or by any Subcontractor hired by the Proposer or anyone directly or indirectly employed by the Proposer or hired by the Proposer.

The successful Proposer shall supply and maintain insurance which defends, indemnifies and holds harmless the City of St. Pete Beach, its officers, employees and agents from and against any and all liability, damage claims, demands, costs, judgments, fees, attorney's fees or loss arising directly out of acts or omissions hereunder by the Proposer or third party under the direction or control of the Proposer. Such general and excess liability coverage shall be primary to any other coverage carried by the City of St Pete Beach. Proposer must furnish the City with Certificate of Insurance prior to commencement of work. An

approved Certificate of Insurance furnished by the Proposer's carrier to guarantee the Proposer being insured with the City of St Pete Beach must be named as a certificate holder for this contract. The following minimum coverage:

- Professional Liability Insurance $2,000,000 each occurrence.
- Commercial General Liability Insurance $1,000,000.00.
- Comprehensive General Liability Insurance of $1,000,000.00 each occurrence.
- Personal Injury for $1,000,000.00 each occurrence.
- Automobile Liability $1,000,000.00.
- General Workers Compensation Insurance as required by Florida law.
- Longshore Harbor Workers Compensation Insurance

PROTECTION OF WORK AND PROPERTY
The Proposer shall continuously maintain adequate protection of all their work and materials from damage or theft and shall protect the City's property and all adjacent property from injury or loss arising in connection with activities under their Contract. The Proposer shall make good any such damage, injury, or loss, except such as may be caused by agents or employees of the City.

The Proposer shall take, use, provide, and maintain all necessary precautions, safeguards, and protection to prevent accidents, or injury to persons or property on, about, or adjacent to the site of the work. Should the situation arise that physical security is needed the Proposer will provide security on off days and holidays. The Proposer shall be responsible for all charges incurred with such action.

The Proposer shall post danger signs warning against any hazards created by the work being done under their Contract. They shall designate a responsible member of their organization on the work, whose duty shall be the prevention of accidents, and the name of the person so designated shall be reported to the City Manager or designee and City in writing. In an emergency affecting the safety of life, or of the work or adjoining property, the Proposer, without special instruction or authorization from the City Manager or designee, or City, is hereby permitted to act, at their own discretion, to prevent such threatened loss or injury, and they must take such action if so instructed or authorized by the City Manager or designee. The Proposer shall also protect adjacent property as required by law.

PROPOSAL REVIEW AND CONTRACT AWARD
Failure to submit all documents requested at the time of proposal may deem the Proposer's proposal ineligible for award. The City of St. Pete Beach reserves the right to reject any or all proposals or parts of proposals. The contract shall be awarded by written notice to the responsible and responsive Contractor whose proposal is determined in writing to be the most advantageous to the City, taking into consideration the price and other criteria set forth in this request for proposals. The City may waive any informality.

LOCAL, STATE AND FEDERAL COMPLAINCE REQUIREMENTS
The laws of the State of Florida do apply to any purchase made under this Request for Proposal. Proposers shall comply with all local, state, and federal directives, orders and laws as applicable to their proposal and subsequent contracts include but not limited to Equal Employment Opportunity, Minority Business Enterprise, and OSHA as applicable to this contract.

Compliance with Fla. Stat. 448.095:

- Proposer agrees to comply with all applicable portions of Fla. Stat. 448.095. Proposer must use the

U.S. Department of Homeland Security's E-Verify System, hhttps://e-verify.uscis.gov/emp, to verify the employment eligibility of all employees hired on or after January 1, 2021 during the term of this Agreement.

- Subcontractors (i) Proposer shall also require all subcontractors performing work under this Agreement to use the E-Verify system for any employees they may hire during the term of this Agreement. (ii) Subcontractors shall provide Proposer with an affidavit stating the subcontractor does not employ, contract with, or subcontract with an unauthorized alien, as defined by Fla. Stat. 448.095 (iii) Proposer shall provide a copy of such affidavit to the City upon receipt and shall maintain a copy for the duration of the Agreement.

- Proposer must provide evidence of compliance with Fla. Stat. 448.05 by January 1, 2021. Evidence may consist of, but is not limited to, providing notice of Proposer's E-Verify number.

- Failure to comply with this provision is a material breach of the Agreement, and the City may choose to terminate the Agreement at its sole discretion. Proposer may be liable for all costs associated with the City securing the same services, inclusive, but not limited to, higher costs for the same services and proposal costs (if necessary). Any challenge to termination under this provision must be filed in the Circuit Court no later than 20 calendar days after the date of termination. If this agreement is terminated for a violation of the statute by the Proposer, the Proposer may not be awarded a public agreement for a period of 1 year after date of termination.

RESERVES THE RIGHT

The City reserves the right to accept or reject any and/or all proposals, to waive irregularities and technicalities, and to request re-submission. If only one proposal is received by the proposal date and time listed, the proposal may or may not be rejected by the City depending upon proposal review and the needs of the City.

The City reserves the right to select a firm with or without additional interviews and may decide to select any of the firms submitting proposals. The City reserves the right to award the contract to a responsible proposer submitting a responsible proposal, with a resulting negotiated agreement which is most advantageous and in the best interest of the City.

Proposers, Proposers, their agents, and associates shall not contact or solicit any City Commission member, City employee, or official regarding this RFP during any phase of the proposalding process. Failure to comply with the provision may result in disqualification of the Proposer, at the option of the City. Only that individual listed, or an approved designee, as the contact person for this RFP shall be contacted.

SUBMITTAL WITHDRAWAL

After submittals are opened, corrections or modifications to submittals are not permitted, but a responding firm may be permitted to withdraw an erroneous submittal prior to the award by the City Commission, if the following is established:

- That the responding firm acted in good faith in submitting the submittal;
- That in preparing the submittal there was an error of such magnitude that enforcement of the submittal would work severe hardship upon the respondent;
- That the error was not the result of gross negligence or willful inattention on the part of the respondent;
- That the error was discovered and communicated to the City within twenty-four (24) hours of submittal opening, along with a request for permission to withdraw the submittal; or
- The responding firm submits documentation and an explanation of how the error was made.

CONE OF SILENCE
Respondents to this solicitation or persons acting on their behalf may not contact, between the release of the solicitation and the end of the 72-hour period following the agency posting the notice of intended award, excluding Saturdays, Sundays, and state holidays, any employee or officer of the executive or legislative branch concerning any aspect of this solicitation, except in writing to the procurement officer or as provided in the solicitation documents. Violation of this provision may be grounds for rejecting a response.

TERMINATION
The resulting contract may be canceled by the City when:

- Sufficient funds are not available to continue its full and faithful performance of this contract.
- There is sub-standard or non-performance of contract.
- The City wishes to terminate at any time and for any reason, upon giving thirty (30) days prior written notice to the other party.

The resulting contract may be canceled by either party in the event of substantial failure to perform in accordance with the terms by the other party through no fault of the terminating party.

FISCAL NON-FUNDING

If funds for the requested services described herein are not appropriated via the annual budget adoption process, the City reserves the right to cancel this Agreement immediately upon written notice to the vendor.

PROJECT RECORDS
The awarded firm shall maintain auditable records concerning the procurement to account for all receipts and expenditures, and to document compliance with the Contract. These records shall be kept in accordance with generally accepted accounting methods, and the City of St. Pete Beach reserves the right to determine the record-keeping method in the event of non-conformity. These records shall be maintained for three (3) years after final payment has been made and shall be readily available to City personnel with reasonable notice, and to other persons in accordance with the Florida Public Disclosure Statutes. Additionally, the awarded firm shall abide by and comply with Florida Statutes regarding public records. Specifically, the firm shall be aware of the provisions found in Section 119.0701, Florida Statutes.

Upon completion of the project, all reports, studies, recommendations, forms, and other project specific information will need to be submitted in paper and in an electronic file format (.PDF, .JPEG) on CD or USB storage device.

V. REFERENCES & MINIMUM QUALIFICATIONS

Provide at least three (3) or more professional, business references with which you have contracted to provide similar services in the past five (5) years. Include the name of the person, its organization, telephone number, fax number, and e-mail address. Include any governmental agencies, with the same contact and descriptive information for which you have provided similar service within the past five (5) years.

Provide a brief description of the history and capabilities of the firm. Describe the types of projects or services the firm performs/has performed and the dollar value of each. Provide information regarding your firm's ability to complete this project. Demonstrate that the firm's personnel have experience with similar projects.

Identify all unresolved and ongoing claims and disputes against your firm in excess of $500,000. Include any claims against the principals of your firm or any claims your company may have against a third party. Provide a history of litigation, including the outcomes, for the past five (5) years.

The responding firm shall provide a statement of assurance that the firm is not presently in violations of any statutes or regulatory rules that might have an impact on the firm's operations. All applicable laws and regulations of the State of Florida and ordinances and regulations of the City of St. Pete Beach will apply.

Provide the overall bonding capacity for the company and provide a history of any claims against the Proposer's previous bonds for the past five (5) years.

The City shall be the sole final judge of qualifications of Proposer to perform service and reserves the exclusive right to accept or reject any proposal as it deems to be in the best interests of the City. The City reserves the right to make such investigation, as it deems necessary, to determine the ability of any proposer to perform the work or service requested. Failure to comply with the requirements of this section may be grounds for rejecting a response.

VI. CONTRACTOR'S PROPOSAL SUBMITTAL

The company that is submitting a proposal declares that it has extensive experience providing Task Work Order driven Civil On-Call Construction Services.

The undersigned, as Proposer, hereby declares that the only person or persons interested in the Proposal as principal or principals are named herein, and that no person other than herein mentioned has any interest in the Proposal or in the Agreement to be entered into; that this Proposal or Agreement is made without connection with any other person, company, or parties making a Proposal; and that it is in all respects fair and in good faith without collusion or fraud.

The Proposer further declares that they have examined the site of the work and informed themselves fully in regard to all conditions pertaining to the place where the work is to be done; that they have examined the Plans and Specifications for the work and Contract Documents relative thereto, and have read all special provisions furnished prior to the opening of proposals; and that they have satisfied themselves relative to the materials to be supplied and work to be performed.

The Proposer proposes and agrees, if the Proposal is accepted, to contract with the City of St. Pete Beach, Florida, in the form of an Agreement specified for **"Civil On Call Construction Services"** in St. Pete Beach, Florida, in full and complete accordance with the shown, noted, described, and reasonably intended requirements of the Plans, Specifications, and Contract Documents, to the full and entire satisfaction of the City of St. Pete Beach, Florida.

The successful Proposer shall be required to utilize the template Agreement in this Request for Proposals (RFP) and any questions regarding the Agreement must be addressed during the RFP process before submittal. The City reserves the right to respond or not respond to questions in the form of an addendum.

The Proposer proposes to furnish all materials, equipment, labor, and perform the work submitted in their proposal schedule for the City of St. Pete Beach **"Civil On Call Construction Services."**

COMPANY:_____ DATE: _____

ADDRESS:_____ PHONE:_____

PROPOSER: _____ NAME: _____

(SIGNATURE) (PRINT NAME & TITLE)

STATE OF FLORIDA
COUNTY OF _____

The foregoing instrument was sworn to (or affirmed), subscribed, and acknowledged before me by means of ☐ physical presence or ☐ online notarization, this _____ day of _____, 2026, by_____, who is personally known to me or has produced _____ as identification.

(SEAL)

_____
Notary Public – State of Florida

_____
(Print, Type, Stamp, or Commissioned Name of Notary Public)

SUBMIT PROPOSAL TO: Electronically via Bonfire only

VII. PUBLIC ENTITY CRIMINAL AFFIDAVIT

SWORN STATEMENT – PUBLIC ENTITY CRIMES

PURSUANT TO § 287.133 (3)(a), FLORIDA STATUTES, ON PUBLIC ENTITY CRIMES
THE FORM MUST BE SIGNED AND SWORN TO IN THE PRESENCE OF A NOTARY PUBLIC OR OTHER OFFICIAL AUTHORIZED TO ADMINISTER OATHS.

1. This sworn statement is submitted to: City of St. Pete Beach
by: _____
(Print individual's name and title)

for: _____
(Print name of entity submitting sworn statement)

at: _____
(Business address)

and (if applicable), its Federal Employer Identification Number (FEIN):

_____
(FEIN)
or, if the entity has no FEIN, include the Social Security Number:

_____
(SSN)

by the individual signing this sworn statement:
_____ (Signature)

2. I understand that a "public entity crime" as defined in § 287.133 (1)(g), Fla. Stat., means a violation of any State or Federal law by a person with respect to and directly related to the transaction of business with any public entity or with an agency or political subdivision of any other state or of the United States including, but not limited to, any proposal or contract for goods or services, any lease for real property, or any contract for the construction or repair of a public building or public work, involving antitrust, fraud, theft, bribery, collusion, racketeering, conspiracy, or material misrepresentation.

3. I understand that "convicted" or "conviction" as defined in § 287.133 (1)(b), Fla. Stat., means a finding of guilt or a conviction of public entity crime with or without an adjudication of guilt in any Federal or State trial court of record relating to charges brought by indictment or information after July 1, 1989, as a result of a jury verdict, non-jury trial, or entry of a plea of guilty or nolo contendere.

4. I understand that an "affiliate" as defined in § 287.133 (1)(a), Fla. Stat., means:
   a. A predecessor or successor of a person convicted of a public entity crime or
   b. An entity under the control of any natural person who is active in the management of the entity and who has been convicted of a public entity crime. The term "affiliate" includes those officers, directors, executives, partners, shareholders, employees, members, and agents who are active in the management of an affiliate. The ownership by one (1) person of shares constituting a controlling interest in another person or a pooling of equipment or income among persons when not for fair market value under the arm's length agreement, shall be a prima facie case that one (1) person controls another person. A person who knowingly enters into a joint venture with a person who has been convicted of a public crime in Florida during the preceding thirty-six (36) months shall be considered an affiliate.

5. I understand that a "person" as defined in Section 287.133 (1)(e), Fla. Stat., means any natural person or any entity organized under the laws of any state or of the United States with the legal power to enter into a binding contract and which proposals or applies to proposal on contracts let by a public entity, or which otherwise transacts or applies to transact business with a public entity. The term "person" includes those officers, directors, executives, partners, shareholders, employees, members, and agents who are active in management of an entity.

6. Based on information and belief, the **statement which I have marked below is true** in relation to the entity submitting this sworn statement (indicate which statement applies).

☐ Neither the entity submitting this sworn statement, nor any of its officers, directors, executives, partners, shareholders, employees, members, or agents who are active in the management of the entity nor any affiliate of the entity has been charged with and convicted of a public entity crime subsequent to July 1, 1989.

☐The entity submitting this sworn statement or one (1) or more of its officers, directors, executives, partners, shareholders, employees, members, or agents who are active in the management of the entity or an affiliate of the entity has been charged with and convicted of a public entity crime subsequent to July 1, 1989.

☐The entity submitting this sworn statement or one (1) or more of its officers, directors, executives, partners, shareholders, employees, members, or agents who are active in the management of the entity or an affiliate of the entity has been charged with and convicted of a public entity crime subsequent to July 1, 1989. However, there has been a subsequent proceeding before a Hearing Office of the State of Florida, Division of Administrative Hearings and the Final Order entered by the Hearing Officer determined that it was not in the public interest to place the entity submitting this sworn statement on the convicted vendor list (attach a copy of the final order).

I UNDERSTAND THAT THE SUBMISSION OF THIS FORM TO THE CONTRACTING OFFICE FOR THE PUBLIC ENTITY IDENTIFIED IN PARAGRAPH 1 ABOVE IS FOR THE PUBLIC ENTITY ONLY AND THAT THIS FORM IS VALID THROUGH DECEMBER 31 OF THE CALENDAR YEAR IN WHICH IT IS FILED. I ALSO UNDERSTAND THAT I AM REQUIRED TO INFORM THE PUBLIC ENTITY PRIOR TO ENTERING INTO A CONTRACT IN EXCESS OF THE THRESHOLD AMOUNT PROVIDED IN SECTION 287.017, FLORIDA STATUTES, FOR CATEGORY TWO OF ANY CHANGE IN THE INFORMATION CONTAINED IN THIS FORM.

STATE OF FLORIDA
COUNTY OF _____

The foregoing instrument was sworn to (or affirmed), subscribed, and acknowledged before me by means of ☐ physical presence or ☐ online notarization, this _____ day of _____, 2026, by_____, who is personally known to me or has produced _____ as identification.

(SEAL)

_____
Notary Public – State of Florida

_____
(Print, Type, Stamp, or Commissioned
Name of Notary Public)

VIII. NON-COLLUSION AFFADAVIT

STATE OF _____ COUNTY OF _____

I state that **I**_____ of _____,
(Name and Title) (Name of Firm)

I am authorized to make this affidavit on behalf of my firm and its owner, directors and officers. I am the person responsible in my firm for the price(s) and amount(s) of this Response, and the preparation of the Response. I state that:

1. The price(s) and amount(s) of this Response have been arrived at independently and without consultation, communication or agreement with any other Provider, potential provider, Proposal, or potential Proposal.
2. Neither the price(s) nor the amount(s) of this Response, and neither the approximate price(s) nor approximate amount(s) of this Response, have been disclosed to any other firm or person who is a Provider, potential Provider, Proposal, or potential Proposal, and they will not be disclosed before Proposal opening.
3. No attempt has been made or will be made to induce any firm or persons to refrain from submitting a Response for this contract, or to submit a price(s) higher that the prices in this Response, or to submit any intentionally high or noncompetitive price(s) or other form of complementary Response.
4. The Response of my firm is made in good faith and not pursuant to any agreement or discussion with, or inducement from, any firm or person to submit a complementary or other noncompetitive Response.
5. _____, its affiliates, subsidiaries, officers, director, and employees (Name of Firm) are not currently under investigation, by any governmental agency and have not in the last three years been convicted or found liable for any act prohibited by State or Federal law in any jurisdiction, involving conspiracy or collusion with respect to Proposal, on any public contract, except as follows:

I state that I and the named firm understand and acknowledge that the above representations are material and important, and will be relied on by the State of Florida for which this Response is submitted. I understand and my firm understands that any misstatement in this affidavit is, and shall be treated as, fraudulent concealment from the State of Florida of the true facts relating to the submission of responses for this contract.

Name of Organization:_____ Signed By: _____

Print Name:_____

The foregoing instrument was sworn to (or affirmed), subscribed, and acknowledged before me by means of ☐ physical presence or ☐ online notarization, this _____ day of _____, 2026, by _____, who is personally known to me or has produced _____ as identification.

(SEAL)

_____
Notary Public – State of Florida

_____
(Print, Type, Stamp, or Commissioned
Name of Notary Public)

Bid Form for City of St Pete Beach
On-Call Civil Construction Services
Request for Proposal

Specifications for the numbered pay items can be found in the current FDOT "Standard Specifications for Road and Bridge Construction".
Bid quantities are for comparison purposes only. This contract consists of various projects which are not yet defined and no quantities are guaranteed.

Pay Item No.	Item Description	Units	Est. Quantity	Unit Price	Amount
0101 1 (2501-5000)	MOBILIZATION (PER WORK ASSIGNMENT/LOCATION) - $2,501 TO $5,000	LS	1		$0.00
0101 1 (5501-25000)	MOBILIZATION (PER WORK ASSIGNMENT/LOCATION) - $5,001 TO $25,000	LS	1		$0.00
0101 1 (25001-50000)	MOBILIZATION (PER WORK ASSIGNMENT/LOCATION) - $25,001 TO $50,000	LS	1		$0.00
0101 1 (50001-150000)	MOBILIZATION (PER WORK ASSIGNMENT/LOCATION) - $50,001 TO $150,000	LS	1		$0.00
0101 1 (150001-250000)	MOBILIZATION (PER WORK ASSIGNMENT/LOCATION) - $150,001 TO $250,000	LS	1		$0.00
0101 1 (250001-350000)	MOBILIZATION (PER WORK ASSIGNMENT/LOCATION) - $250,001 TO $350,000	LS	1		$0.00
0101 1 (350001-500000)	MOBILIZATION (PER WORK ASSIGNMENT/LOCATION) - $350,001 to $500,000	LS	1		$0.00
0101 1 (500001+)	MOBILIZATION (PER WORK ASSIGNMENT/LOCATION) - $500,001 or more	LS	1		$0.00
0101 1 (2501-5000)	EMERGENCY MOBILIZATION (PER WORK ASSIGNMENT/LOCATION) - $2,501 TO $5,000	LS	1		$0.00
0101 1 (5501-25000)	EMERGENCY MOBILIZATION (PER WORK ASSIGNMENT/LOCATION) - $5,001 TO $25,000	LS	1		$0.00
0101 1 (25001-50000)	EMERGENCY MOBILIZATION (PER WORK ASSIGNMENT/LOCATION) - $25,001 TO $50,000	LS	1		$0.00
0101 1 (50001-150000)	EMERGENCY MOBILIZATION (PER WORK ASSIGNMENT/LOCATION) - $50,001 TO $150,000	LS	1		$0.00
0101 1 (150001-250000)	EMERGENCY MOBILIZATION (PER WORK ASSIGNMENT/LOCATION) - $150,001 TO $250,000	LS	1		$0.00
0102 1	MAINTENANCE OF TRAFFIC	Lump Sum (LS) cost to be assigned for each Task Order and shall not exceed 10% of the proposed construction cost.			
0102 3	COMMERCIAL MATERIAL FOR TEMPORARY DRIVEWAY MAINTENANCE	CY	50		$0.00
0102 14	TRAFFIC CONTROL OFFICER	HR	500		$0.00
0102 60	WORK ZONE SIGN	ED	6000		$0.00
0102 61	BUSINESS SIGN	EA	5		$0.00
0102 71 11	BARRIER WALL, TEMPORARY, F&I, CONCRETE	LF	200		$0.00
0102 71 13	BARRIER WALL, TEMPORARY, F&I, LOW PROFILE, CONCRETE	LF	200		$0.00
0102 71 14	BARRIER WALL, TEMPORARY, F&I, TYPE K	LF	200		$0.00
0102 71 21	BARRIER WALL, TEMPORARY, RELOCATE, CONCRETE	LF	200		$0.00
0102 71 23	BARRIER WALL, TEMPORARY, RELOCATE, LOW PROFILE, CONCRETE	LF	200		$0.00
0102 71 24	BARRIER WALL, TEMPORARY, RELOCATE, TYPE K	LF	200		$0.00
0102 73	TEMPORARY GUARDRAIL	LF	20		$0.00

0102 74 1	CHANNELIZING DEVICE- TYPES I, II, DI, VP, DRUM, OR LCD	ED	15000		$0.00
0102 74 2	CHANNELIZING DEVICE, TYPE III, 6'	ED	1000		$0.00
0102 74 7	CHANNELIZING DEVICE- PEDESTRIAN LCD (LONGITUDINAL CHANNELIZING DEVICE)	LF	1000		$0.00
0102 75 1	TEMPORARY SEPARATOR, F&I REMOVE	LF	500		$0.00
0102 75 2	TEMPORARY SEPARATOR, F&I REMAIN	LF	500		$0.00
0102 75 3	TEMPORARY SEPARATOR, INSTALL	LF	500		$0.00
0102 75 4	TEMPORARY SEPARATOR, RELOCATE	LF	500		$0.00
0102 75 5	TEMPORARY SEPARATOR, REMOVE	LF	500		$0.00
0102 76	ARROW BOARD / ADVANCE WARNING ARROW PANEL	ED	250		$0.00
0102 78	TEMPORARY RETROREFLECTIVE PAVEMENT MARKER	EA	50		$0.00
0102 89 1	TEMPORARY CRASH CUSHION, REDIRECTIVE OPTION	LO	5		$0.00
0102 99	PORTABLE CHANGEABLE MESSAGE SIGN, TEMPORARY	ED	600		$0.00
0102 104	TEMPORARY SIGNALIZATION AND MAINTENANCE, INTERSECTION	ED	100		$0.00
0102 107 1	TEMPORARY TRAFFIC DETECTION AND MAINTENANCE, INTERSECTION	ED	100		$0.00
0102 150 1	PORTABLE REGULATORY SIGN	ED	50		$0.00
0102 150 2	RADAR SPEED DISPLAY UNIT	ED	50		$0.00
0102 911 1	PAVEMENT MARKING REMOVABLE TAPE, WHITE OR BLACK, SKIP	LF	500		$0.00
0102 911 2	PAVEMENT MARKING REMOVABLE TAPE, WHITE, BLACK, SOLID	LF	500		$0.00
0102 911 3	PAVEMENT MARKING REMOVABLE TAPE, WHITE OR BLACK, OTHER	SF	25		$0.00
0102 912 1	PAVT MARKING REMOVABLE TAPE, YELLOW, SKIP	LF	500		$0.00
0102 912 2	PAVEMENT MARKING REMOVABLE TAPE, YELLOW, SOLID	LF	500		$0.00
0102 912 3	PAVEMENT MARKING REMOVABLE TAPE, YELLOW, OTHER	SF	25		$0.00
0104 1	ARTIFICIAL COVERINGS /ROLLED EROSION CONTROL PRODUCTS	SY	150		$0.00
0104 10 3	SEDIMENT BARRIER	LF	5000		$0.00
0104 11	FLOATING TURBIDITY BARRIER	LF	100		$0.00
0104 12	STAKED TURBIDITY BARRIER- NYLON REINFORCED PVC	LF	100		$0.00
0104 13 1	STAKED SILT FENCE, TYPE III	LF	500		$0.00
0104 13 2	STAKED SILT FENCE, TYPE IV	LF	500		$0.00
0104 18	INLET PROTECTION SYSTEM	EA	100		$0.00

0107 1	LITTER REMOVAL	AC	10		$0.00
0107 2	MOWING	AC	10		$0.00
0110 2 1	CLEARING & GRUBBING	AC	10		$0.00
0110 3	REMOVAL OF EXISTING STRUCTURES/BRIDGES	SF	20		$0.00
0110 4 10	REMOVAL OF EXISTING CONCRETE	SY	2000		$0.00
0110 7 1	MAILBOX, F&I SINGLE	EA	5		$0.00
0120 1	REGULAR EXCAVATION	CY	3000		$0.00
0120 3	LATERAL DITCH EXCAVATION	CY	100		$0.00
0120 4	SUBSOIL EXCAVATION	CY	100		$0.00
0120 5	CHANNEL EXCAVATION	CY	100		$0.00
0120 6	EMBANKMENT	CY	500		$0.00
0121 70	FLOWABLE FILL	CY	50		$0.00
0125 1	EXCAVATION FOR STRUCTURES	CY	25		$0.00
0145 1	GEOSYNTHETIC REINFORCED SOIL SLOPE	SF	25		$0.00
0160 4	TYPE B STABILIZATION	SY	7000		$0.00
0162 1 11	PREPARED SOIL LAYER-6" DEPTH	SY	50		$0.00
0162 1 12	PREPARED SOIL LAYER, FINISH SOIL LAYER, 12"	SY	50		$0.00
0162 1 21	PREPARED SOIL LAYER, ORGANIC SOIL LAYER, 6"	SY	50		$0.00
285701	OPTIONAL BASE, BASE GROUP 01	SY	100		$0.00
285702	OPTIONAL BASE, BASE GROUP 02	SY	100		$0.00
285703	OPTIONAL BASE, BASE GROUP 03	SY	100		$0.00
285704	OPTIONAL BASE, BASE GROUP 04	SY	1000		$0.00
285705	OPTIONAL BASE, BASE GROUP 05	SY	100		$0.00
285706	OPTIONAL BASE, BASE GROUP 06	SY	1000		$0.00
285707	OPTIONAL BASE, BASE GROUP 07	SY	100		$0.00
285708	OPTIONAL BASE, BASE GROUP 08	SY	1000		$0.00
285709	OPTIONAL BASE, BASE GROUP 09	SY	100		$0.00
285710	OPTIONAL BASE GROUP 10	SY	100		$0.00
285711	OPTIONAL BASE, BASE GROUP 11	SY	100		$0.00

285712	OPTIONAL BASE, BASE GROUP 12	SY	100		$0.00
285713	OPTIONAL BASE, BASE GROUP 13	SY	100		$0.00
285714	OPTIONAL BASE, BASE GROUP 14	SY	100		$0.00
285715	OPTIONAL BASE, BASE GROUP 15	SY	100		$0.00
0327 70 1	MILLING EXIST ASPH PAVT, 1" AVG DEPTH	SY	1000		$0.00
0327 70 2	MILLING EXIST ASPH PAVT, 3 1/2" AVG DEPTH	SY	200		$0.00
0327 70 3	MILLING EXIST ASPH PAVT, 4 1/2" AVG DEPTH	SY	200		$0.00
0327 70 4	MILLING EXIST ASPH PAVT, 3" AVG DEPTH	SY	200		$0.00
0327 70 5	MILLING EXIST ASPH PAVT, 2" AVG DEPTH	SY	200		$0.00
0327 70 6	MILLING EXIST ASPH PAVT, 1 1/2" AVG DEPTH	SY	5000		$0.00
0327 70 7	MILLING EXIST ASPH PAVT, 4" AVG DEPTH	SY	200		$0.00
0327 70 8	MILLING EXIST ASPH PAVT, 2 1/2" AVG DEPTH	SY	200		$0.00
0327 70 11	MILLING EXIST ASPH PAVT, 2 1/4" AVG DEPTH	SY	200		$0.00
0327 70 12	MILLING EXIST ASPH PAVT, 1 1/4" AVG DEPTH	SY	200		$0.00
0327 70 13	MILLING EXIST ASPH PAVT, 1 3/4" AVG DEPTH	SY	200		$0.00
0327 70 15	MILLING EXIST ASPH PAVT, 2 3/4" AVG DEPTH	SY	200		$0.00
0327 70 16	MILLING EXIST ASPH PAVT, 1/2" AVG DEPTH	SY	200		$0.00
0327 70 17	MILLING EXIST ASPH PAVT, 3 1/4" AVG DEPTH	SY	200		$0.00
0327 70 19	MILLING EXIST ASPH PAVT, 3/4" AVG DEPTH	SY	200		$0.00
0327 70 20	MILLING EXIST ASPH PAVT, 3 3/4" AVG DEPTH	SY	200		$0.00
0334 1 12 (1-99)	SUPERPAVE ASPHALTIC CONC, TRAFFIC B, 1-99 TONS	TN	50		$0.00
0334 1 12 (100-199)	SUPERPAVE ASPHALTIC CONC, TRAFFIC B, 100 - 199 TONS	TN	150		$0.00
0334 1 12 (200-300)	SUPERPAVE ASPHALTIC CONC, TRAFFIC B, 200 - 300 TONS	TN	250		$0.00
0334 1 12 (300+)	SUPERPAVE ASPHALTIC CONC, TRAFFIC B, 300 TONS OR MORE	TN	350		$0.00
0334 1 13 (1-99)	SUPERPAVE ASPHALTIC CONC, TRAFFIC C 1 - 99 TONS	TN	50		$0.00
0334 1 13 (100-199)	SUPERPAVE ASPHALTIC CONC, TRAFFIC C 100 - 199 TONS	TN	150		$0.00
0334 1 13 (200-300)	SUPERPAVE ASPHALTIC CONC, TRAFFIC C 200 -300 TONS	TN	250		$0.00
0334 1 13 (300+)	SUPERPAVE ASPHALTIC CONC, TRAFFIC C 300 TONS OR MORE	TN	350		$0.00
0334 1 52 (0-99)	SUPERPAVE ASPHALTIC CONCRETE, TRAFFIC B, PG76-22 0-99 TONS	TN	50		$0.00

0334 1 52 (100-199)	SUPERPAVE ASPHALTIC CONCRETE, TRAFFIC B, PG76-22 100-199 TONS	TN	150		$0.00
0334 1 52 (200-300)	SUPERPAVE ASPHALTIC CONCRETE, TRAFFIC B, PG76-22 200-300 TONS	TN	250		$0.00
0334 1 52 (300+)	SUPERPAVE ASPHALTIC CONCRETE, TRAFFIC B, PG76-22 300 TONS OR MORE	TN	350		$0.00
0334 1 53 (0-99)	SUPERPAVE ASPHALTIC CONCRETE, TRAFFIC C, PG76-22 0-99 TONS	TN	50		$0.00
0334 1 53 (100-199)	SUPERPAVE ASPHALTIC CONCRETE, TRAFFIC C, PG76-22 100-199 TONS	TN	150		$0.00
0334 1 53 (200-300)	SUPERPAVE ASPHALTIC CONCRETE, TRAFFIC C, PG76-22 200-300 TONS	TN	250		$0.00
0334 1 53 (300+)	SUPERPAVE ASPHALTIC CONCRETE, TRAFFIC C, PG76-22 300 TONS OR MORE	TN	350		$0.00
0334 1 54 (0-99)	SUPERPAVE ASPHALTIC CONCRETE, TRAFFIC D, PG76-22 0-99 TONS	TN	50		$0.00
0334 1 54 (100-199)	SUPERPAVE ASPHALTIC CONCRETE, TRAFFIC D, PG76-22 100-199 TONS	TN	150		$0.00
0334 1 54 (200-300)	SUPERPAVE ASPHALTIC CONCRETE, TRAFFIC D, PG76-22 200-300 TONS	TN	250		$0.00
0334 1 54 (300+)	SUPERPAVE ASPHALTIC CONCRETE, TRAFFIC D, PG76-22 300 TONS OR MORE	TN	350		$0.00
0334 1 56 (1-99)	SUPERPAVE ASPHALTIC CONCRETE, TRAFFIC B, HIGH POLYMER 0-99 TONS	TN	50		$0.00
0334 1 56 (100-199)	SUPERPAVE ASPHALTIC CONCRETE, TRAFFIC B, HIGH POLYMER 100-199 TONS	TN	150		$0.00
0334 1 56 (200-300)	SUPERPAVE ASPHALTIC CONCRETE, TRAFFIC B, HIGH POLYMER 200-300 TONS	TN	250		$0.00
0334 1 56 (300+)	SUPERPAVE ASPHALTIC CONCRETE, TRAFFIC B, HIGH POLYMER 300 TONS OR MORE	TN	350		$0.00
0334 1 57 (0-99)	SUPERPAVE ASPHALTIC CONCRETE, TRAFFIC C, HIGH POLYMER 0-99 TONS	TN	50		$0.00
0334 1 57 (100-199)	SUPERPAVE ASPHALTIC CONCRETE, TRAFFIC C, HIGH POLYMER 100-199 TONS	TN	150		$0.00
0334 1 57 (200-300)	SUPERPAVE ASPHALTIC CONCRETE, TRAFFIC C, HIGH POLYMER 200-300 TONS	TN	250		$0.00
0334 1 57 (300+)	SUPERPAVE ASPHALTIC CONCRETE, TRAFFIC C, HIGH POLYMER 300 TONS OR MORE	TN	350		$0.00
0334 1 58 (0-99)	SUPERPAVE ASPHALTIC CONCRETE, TRAFFIC D, HIGH POLYMER 0-99 TONS	TN	50		$0.00
0334 1 58 (100-199)	SUPERPAVE ASPHALTIC CONCRETE, TRAFFIC D, HIGH POLYMER 100-199 TONS	TN	150		$0.00
0334 1 58 (200-300)	SUPERPAVE ASPHALTIC CONCRETE, TRAFFIC D, HIGH POLYMER 200-300 TONS	TN	250		$0.00
0334 1 58 (300+)	SUPERPAVE ASPHALTIC CONCRETE, TRAFFIC D, HIGH POLYMER 300 TONS OR MORE	TN	350		$0.00
0337 7 80 (0-99)	ASPHALT CONCRETE FRICTION COURSE,TRAFFIC B, FC-9.5, PG 76-22 0-99 TONS	TN	50		$0.00
0337 7 80 (100-199)	ASPHALT CONCRETE FRICTION COURSE,TRAFFIC B, FC-9.5, PG 76-22 100-199 TONS	TN	150		$0.00
0337 7 80 (200-300)	ASPHALT CONCRETE FRICTION COURSE,TRAFFIC B, FC-9.5, PG 76-22 200-300 TONS	TN	250		$0.00
0337 7 80 (300+)	ASPHALT CONCRETE FRICTION COURSE,TRAFFIC B, FC-9.5, PG 76-22 300 TONS OR MORE	TN	350		$0.00
0337 7 81 (0-99)	ASPHALT CONCRETE FRICTION COURSE,TRAFFIC B, FC-12.5, PG 76-22 0-99 TONS	TN	50		$0.00
0337 7 81 (100-199)	ASPHALT CONCRETE FRICTION COURSE,TRAFFIC B, FC-12.5, PG 76-22 100-199 TONS	TN	150		$0.00

0337 7 81 (200-300)	ASPHALT CONCRETE FRICTION COURSE,TRAFFIC B, FC-12.5, PG 76-22 200-300 TONS	TN	250		$0.00
0337 7 81 (300+)	ASPHALT CONCRETE FRICTION COURSE,TRAFFIC B, FC-12.5, PG 76-22 300 TONS OR MORE	TN	350		$0.00
0337 7 82 (0-99)	ASPHALT CONCRETE FRICTION COURSE,TRAFFIC C, FC-9.5, PG 76-22 0-99 TONS	TN	50		$0.00
0337 7 82 (100-199)	ASPHALT CONCRETE FRICTION COURSE,TRAFFIC C, FC-9.5, PG 76-22 100-199 TONS	TN	150		$0.00
0337 7 82 (200-300)	ASPHALT CONCRETE FRICTION COURSE,TRAFFIC C, FC-9.5, PG 76-22 200-300 TONS	TN	250		$0.00
0337 7 82 (300+)	ASPHALT CONCRETE FRICTION COURSE,TRAFFIC C, FC-9.5, PG 76-22 300 TONS OR MORE	TN	350		$0.00
0337 7 83 (0-99)	ASPHALT CONCRETE FRICTION COURSE,TRAFFIC C, FC-12.5, PG 76-22 0-99 TONS	TN	50		$0.00
0337 7 83 (100-199)	ASPHALT CONCRETE FRICTION COURSE,TRAFFIC C, FC-12.5, PG 76-22 100-199 TONS	TN	150		$0.00
0337 7 83 (200-300)	ASPHALT CONCRETE FRICTION COURSE,TRAFFIC C, FC-12.5, PG 76-22 200-300 TONS	TN	250		$0.00
0337 7 83 (300+)	ASPHALT CONCRETE FRICTION COURSE,TRAFFIC C, FC-12.5, PG 76-22 300 TONS OR MORE	TN	350		$0.00
0337 7 85 (0-99)	ASPHALT CONCRETE FRICTION COURSE,TRAFFIC D, FC-12.5, PG 76-22 0-99 TONS	TN	50		$0.00
0337 7 85 (100-199)	ASPHALT CONCRETE FRICTION COURSE,TRAFFIC D, FC-12.5, PG 76-22 100-199 TONS	TN	150		$0.00
0337 7 85 (200-300)	ASPHALT CONCRETE FRICTION COURSE,TRAFFIC D, FC-12.5, PG 76-22 200-300 TONS	TN	250		$0.00
0337 7 85 (300+)	ASPHALT CONCRETE FRICTION COURSE,TRAFFIC D, FC-12.5, PG 76-22 300 TONS OR MORE	TN	350		$0.00
0337 7 90 (0-99)	ASPHALT CONCRETE FRICTION COURSE,TRAFFIC B, FC-9.5, HIGH POLYMER 0-99 TONS	TN	50		$0.00
0337 7 90 (100-199)	ASPHALT CONCRETE FRICTION COURSE,TRAFFIC B, FC-9.5, HIGH POLYMER 100-199 TONS	TN	150		$0.00
0337 7 90 (200-300)	ASPHALT CONCRETE FRICTION COURSE,TRAFFIC B, FC-9.5, HIGH POLYMER 200-300 TONS	TN	250		$0.00
0337 7 90 (300+)	ASPHALT CONCRETE FRICTION COURSE,TRAFFIC B, FC-9.5, HIGH POLYMER 300 TONS OR MORE	TN	350		$0.00
0337 7 93 (0-99)	ASPHALT CONCRETE FRICTION COURSE,TRAFFIC C, FC-12.5, HIGH POLYMER 0-99 TONS	TN	50		$0.00
0337 7 93 (100-199)	ASPHALT CONCRETE FRICTION COURSE,TRAFFIC C, FC-12.5, HIGH POLYMER 100-199 TONS	TN	150		$0.00
0337 7 93 (200-300)	ASPHALT CONCRETE FRICTION COURSE,TRAFFIC C, FC-12.5, HIGH POLYMER 200-300 TONS	TN	250		$0.00
0337 7 93 (300+)	ASPHALT CONCRETE FRICTION COURSE,TRAFFIC C, FC-12.5, HIGH POLYMER 300 TONS OR MORE	TN	350		$0.00
0337 7 94 (0-99)	ASPHALT CONCRETE FRICTION COURSE,TRAFFIC D, FC-12.5, HIGH POLYMER 0-99 TONS	TN	50		$0.00
0337 7 94 (100-199)	ASPHALT CONCRETE FRICTION COURSE,TRAFFIC D, FC-12.5, HIGH POLYMER 100-199 TONS	TN	150		$0.00
0337 7 94 (200-300)	ASPHALT CONCRETE FRICTION COURSE,TRAFFIC D, FC-12.5, HIGH POLYMER 200-300 TONS	TN	250		$0.00
0337 7 94 (300+)	ASPHALT CONCRETE FRICTION COURSE,TRAFFIC D, FC-12.5, HIGH POLYMER 300 TONS OR MORE	TN	350		$0.00
0339 1	MISCELLANEOUS ASPHALT PAVEMENT	TN	25		$0.00
0350 3 5	PLAIN CEMENT CONCRETE PAVEMENT, 8"	SY	100		$0.00
0350 3 9	PLAIN CEMENT CONCRETE PAVEMENT, 10"	SY	100		$0.00

0350 3 13	PLAIN CEMENT CONCRETE PAVEMENT, 12"	SY	100		$0.00
0350 5	CLEANING & SEALING JOINTS- CONCRETE PAVEMENT:	LF	100		$0.00
0350 30 13	CONCRETE PAVEMENT FOR ROUNDABOUT APRON, 12" DEPTH	SY	100		$0.00
0352 70	GRINDING CONCRETE PAVEMENT	SY	100		$0.00
0400 0 11	CONCRETE CLASS NS, GRAVITY WALL	CY	10		$0.00
0400 1 2	CONCRETE CLASS I, ENDWALLS	CY	10		$0.00
0400 1 11	CONCRETE CLASS I, RETAINING WALLS	CY	10		$0.00
0400 2 1	CONCRETE CLASS II, CULVERTS	CY	10		$0.00
0400 2 2	CONCRETE CLASS II, ENDWALLS	CY	10		$0.00
0400 2 5	CONCRETE CLASS II, BRIDGE SUBSTRUCTURE	CY	10		$0.00
0400 2 11	CONCRETE CLASS II, RETAINING WALLS	CY	10		$0.00
0400 3 1	CONCRETE CLASS III, CULVERTS	CY	10		$0.00
0400 3 8	CONCRETE CLASS III, BULKHEAD	CY	10		$0.00
0400 4 1	CONCRETE CLASS IV, CULVERTS	CY	10		$0.00
0400 4 2	CONCRETE CLASS IV, ENDWALLS	CY	10		$0.00
0400 4 5	CONCRETE CLASS IV, BRIDGE SUBSTRUCTURE	CY	10		$0.00
0400 4 11	CONC CLASS IV, RETAINING WALLS	CY	10		$0.00
0400 145	CLEANING CONCRETE SURFACE	SF	20		$0.00
0401 70 1	RESTORE SPALLED AREAS, EPOXY	CF	10		$0.00
0401 70 4	RESTORE SPALLED AREAS, PORTLAND CEMENT GROUT	CF	10		$0.00
0401 70 5	RESTORE SPALLED AREAS, CONTRACTORS OPTION	CF	10		$0.00
0411 1	EPOXY MATERIAL FOR CRACK INJECTION- STRUCTURES REHAB	GA	10		$0.00
0411 2	CRACKS INJECT & SEAL- STRUCTURES REHAB	LF	25		$0.00
413-149	PENETRANT SEALER	GA	10		$0.00
413-154	CLEANING & SEALING CONCRETE SURFACES- PENETRANT SEALER OR METHACRYLATES	SF	25		$0.00
0415 1 1	REINFORCING STEEL- ROADWAY	LB	100		$0.00
0415 1 3	REINFORCING STEEL- RETAINING WALL	LB	100		$0.00
0415 1 5	REINFORCING STEEL- BRIDGE SUBSTRUCTURE	LB	100		$0.00
0415 1 6	REINFORCING STEEL- MISCELLANEOUS	LB	100		$0.00

0415 1 8	REINFORCING STEEL- BULKHEAD	LB	100		$0.00
0425 1201	INLETS, CURB, TYPE 9, <10'	EA	3		$0.00
0425 1202	INLETS, CURB, TYPE 9, >10'	EA	3		$0.00
0425 1203	INLETS, CURB, TYPE 9, J BOT, <10'	EA	3		$0.00
0425 1204	INLETS, CURB, TYPE 9, J BOT, >10'	EA	3		$0.00
0425 1205	INLETS, CURB, TYPE 9, PARTIAL	EA	3		$0.00
0425 1209	INLETS, CURB, TYPE 9, MODIFY	EA	3		$0.00
0425 1211	INLETS, CURB, TYPE 10, <10'	EA	3		$0.00
0425 1212	INLETS, CURB, TYPE 10, >10'	EA	3		$0.00
0425 1213	INLETS, CURB, TYPE 10, J BOT <10'	EA	3		$0.00
0425 1214	INLETS, CURB, TYPE 10, J BOT >10'	EA	3		$0.00
0425 1215	INLETS, CURB, TYPE 10, PARTIAL	EA	3		$0.00
0425 1311	INLETS, CURB, TYPE P-1, <10'	EA	3		$0.00
0425 1312	INLETS, CURB TYPE P-1, >10'	EA	3		$0.00
0425 1315	INLETS, CURB TYPE P-1, PARTIAL	EA	3		$0.00
0425 1319	INLETS, CURB TYPE P-1, MODIFY	EA	3		$0.00
0425 1321	INLETS, CURB, TYPE P-2, <10'	EA	3		$0.00
0425 1322	INLETS, CURB, TYPE P-2, >10'	EA	3		$0.00
0425 1325	INLETS, CURB, TYPE P-2, PARTIAL	EA	3		$0.00
0425 1329	INLETS, CURB TYPE P-2, MODIFY	EA	3		$0.00
0425 1331	INLETS, CURB, TYPE P-3, <10'	EA	3		$0.00
0425 1332	INLETS, CURB. TYPE P-3, >10'	EA	3		$0.00
0425 1335	INLETS, CURB, TYPE P-3, PARTIAL	EA	3		$0.00
0425 1341	INLETS, CURB, TYPE P-4, <10'	EA	3		$0.00
0425 1342	INLETS, CURB, TYPE P-4, >10'	EA	3		$0.00
0425 1345	INLETS, CURB, TYPE P-4, PARTIAL	EA	3		$0.00
0425 1349	INLETS, CURB, TYPE P-4, MODIFY	EA	3		$0.00
0425 1351	INLETS, CURB, TYPE P-5, <10'	EA	3		$0.00
0425 1352	INLETS, CURB, TYPE P-5, >10'	EA	3		$0.00

0425 1355	INLETS, CURB, TYPE P-5, PARTIAL	EA	3		$0.00
0425 1359	INLETS, CURB, TYPE P-5, MODIFY	EA	3		$0.00
0425 1361	INLETS, CURB, TYPE P-6, <10'	EA	3		$0.00
0425 1362	INLETS, CURB, TYPE P-6, >10'	EA	3		$0.00
0425 1365	INLETS, CURB, TYPE P-6, PARTIAL	EA	3		$0.00
0425 1369	INLETS, CURB, TYPE P-6, MODIFY	EA	3		$0.00
0425 1411	INLETS, CURB TYPE J-1, <10'	EA	3		$0.00
0425 1412	INLETS, CURB, TYPE J-1, >10'	EA	3		$0.00
0425 1415	INLETS, CURB, TYPE J-1, PARTIAL	EA	3		$0.00
0425 1419	INLETS, CURB, TYPE J-1, MODIFY	EA	3		$0.00
0425 1421	INLETS, CURB, TYPE J-2, <10'	EA	3		$0.00
0425 1422	INLETS, CURB, TYPE J-2, >10'	EA	3		$0.00
0425 1425	INLETS, CURB, TYPE J-2, PARTIAL	EA	3		$0.00
0425 1429	INLETS, CURB, TYPE J-2, MODIFY	EA	3		$0.00
0425 1431	INLETS, CURB, TYPE J-3, <10'	EA	3		$0.00
0425 1432	INLETS, CURB, TYPE J-3, >10'	EA	3		$0.00
0425 1435	INLETS, CURB, TYPE J-3, PARTIAL	EA	3		$0.00
0425 1441	INLETS, CURB, TYPE J-4, <10'	EA	3		$0.00
0425 1442	INLETS, CURB, TYPE J-4, >10'	EA	3		$0.00
0425 1445	INLETS, CURB, TYPE J-4, PARTIAL	EA	3		$0.00
0425 1451	INLETS, CURB, TYPE J-5, <10'	EA	3		$0.00
0425 1452	INLETS, CURB, TYPE J-5, >10'	EA	3		$0.00
0425 1455	INLETS, CURB, TYPE J-5, PARTIAL	EA	3		$0.00
0425 1459	INLETS, CURB, TYPE J-5, MODIFY	EA	3		$0.00
0425 1461	INLETS, CURB, TYPE J-6, <10'	EA	3		$0.00
0425 1462	INLETS, CURB, TYPE J-6, >10'	EA	3		$0.00
0425 1465	INLETS, CURB, TYPE J-6, PARTIAL	EA	3		$0.00
0425 1469	INLETS, CURB, TYPE J-6, MODIFY	EA	3		$0.00
0425 1471	INLETS, CURB, TYPE 7, <10'	EA	3		$0.00

0425 1472	INLETS, CURB, TYPE 7, >10'	EA	3		$0.00
0425 1473	INLETS, CURB, TYPE 7, J BOT , <10'	EA	3		$0.00
0425 1474	INLETS, CURB, TYPE 7, J BOT ,>10'	EA	3		$0.00
0425 1475	INLETS, CURB, TYPE 7, PARTIAL	EA	3		$0.00
0425 1479	INLETS, CURB, TYPE 7, MODIFY	EA	3		$0.00
0425 1481	INLETS, CURB, TYPE 8, <10'	EA	3		$0.00
0425 1483	INLETS, CURB, TYPE 8, J BOT , <10'	EA	3		$0.00
0425 1484	INLETS, CURB, TYPE 8, J BOT ,>10'	EA	3		$0.00
0425 1485	INLETS, CURB, TYPE 8, PARTIAL	EA	3		$0.00
0425 1489	INLETS, CURB, TYPE 8, MODIFY	EA	3		$0.00
0425 1501	INLETS, DT BOT, TYPE A, <10'	EA	3		$0.00
0425 1502	INLETS, DT BOT, TYPE A, >10'	EA	3		$0.00
0425 1503	INLETS, DT BOT, TYPE A, J BOT, <10'	EA	3		$0.00
0425 1504	INLETS, DT BOT, TYPE A, J BOT, >10'	EA	3		$0.00
0425 1505	INLETS, DT BOT, TYPE A, PARTIAL	EA	3		$0.00
0425 1511	INLETS, DT BOT, TYPE B, <10'	EA	3		$0.00
0425 1512	INLETS, DT BOT, TYPE B, >10'	EA	3		$0.00
0425 1513	INLETS, DT BOT, TYPE B, J BOT, <10'	EA	3		$0.00
0425 1514	INLETS, DT BOT, TYPE B, J BOT, >10'	EA	3		$0.00
0425 1515	INLETS, DT BOT, TYPE B, PARTIAL	EA	3		$0.00
0425 1519	INLETS, DT BOT, TYPE B, MODIFY	EA	3		$0.00
0425 1521	INLETS, DT BOT, TYPE C,<10'	EA	3		$0.00
0425 1522	INLETS, DT BOT, TYPE C,>10'	EA	3		$0.00
0425 1523	INLETS, DT BOT, TYPE C,JBOT, <10'	EA	3		$0.00
0425 1524	INLETS, DT BOT, TYPE C, JBOT, >10'	EA	3		$0.00
0425 1525	INLETS, DITCH BOTTOM, TYPE C, PARTIAL	EA	3		$0.00
0425 1529	INLETS, DT BOT, TYPE C, MODIFY	EA	3		$0.00
0425 1531	INLETS, DITCH BOTTOM, TYPE C MODIFIED- BACK OF SIDEWALK, <10'	EA	3		$0.00
0425 1532	INLETS, DITCH BOTTOM, TYPE C MODIFIED- BACK OF SIDEWALK, >10'	EA	3		$0.00

0425 1533	INLETS, DITCH BOTTOM TYPE C MODIFIED- BACK OF SIDEWALK, J BOT, <10'	EA	3		$0.00
0425 1534	INLETS, DITCH BOTTOM, TYPE C MODIFIED- BACK OF SIDEWALK, J BOT, >10'	EA	3		$0.00
0425 1535	INLETS, DITCH BOTTOM TYPE C MODIFIED- BACK OF SIDEWALK, PARTIAL	EA	3		$0.00
0425 1541	INLETS, DT BOT, TYPE D, <10'	EA	3		$0.00
0425 1542	INLETS, DT BOT, TYPE D, >10'	EA	3		$0.00
0425 1543	INLETS, DITCH BOTTOM, TYPE D, J BOT, <10'	EA	3		$0.00
0425 1544	INLETS, DITCH BOTTOM, TYPE D, J BOT, >10'	EA	3		$0.00
0425 1545	INLETS, DITCH BOTTOM, TYPE D, PARTIAL	EA	3		$0.00
0425 1549	INLETS, DT BOT, TYPE D, MODIFY	EA	3		$0.00
0425 1551	INLETS, DT BOT, TYPE E, <10'	EA	3		$0.00
0425 1552	INLETS, DT BOT, TYPE E, >10'	EA	3		$0.00
0425 1553	INLETS, DT BOT, TYPE E, J BOT, <10'	EA	3		$0.00
0425 1554	INLETS, DT BOT, TYPE E, J BOT, >10'	EA	3		$0.00
0425 1555	INLETS, DT BOT, TYPE E, PARTIAL	EA	3		$0.00
0425 1559	INLETS, DT BOT, TYPE E, MODIFY	EA	3		$0.00
0425 1561	INLETS, DT BOT, TYPE F, <10'	EA	3		$0.00
0425 1562	INLETS, DT BOT, TYPE F, >10'	EA	3		$0.00
0425 1563	INLETS, DITCH BOTTOM, TYPE F, J BOT, <10'	EA	3		$0.00
0425 1564	INLETS, DITCH BOTTOM, TYPE F, J BOT, >10'	EA	3		$0.00
0425 1565	INLETS, DITCH BOTTOM, TYPE F, PARTIAL	EA	3		$0.00
0425 1569	INLETS, DITCH BOTTOM, TYPE F, MODIFY	EA	3		$0.00
0425 1571	INLETS, DITCH BOTTOM, TYPE G, <10'	EA	3		$0.00
0425 1572	INLETS, DITCH BOTTOM, TYPE G, >10'	EA	3		$0.00
0425 1573	INLETS, DITCH BOTTOM, TYPE G, J BOT, <10'	EA	3		$0.00
0425 1574	INLETS, DITCH BOTTOM, TYPE G, J BOT, >10'	EA	3		$0.00
0425 1575	INLETS, DITCH BOTTOM, TYPE G, PARTIAL	EA	3		$0.00
0425 1579	INLETS, DITCH BOTTOM, TYPE G, MODIFY	EA	3		$0.00
0425 1581	INLETS, DT BOT, TYPE H, <10'	EA	3		$0.00
0425 1582	INLETS, DT BOT, TYPE H, >10'	EA	3		$0.00

0425 1583	INLETS, DT BOT, TYPE H, J BOTTOM <10'	EA	3		$0.00
0425 1584	INLETS, DT BOT, TYPE H, J BOTTOM >10'	EA	3		$0.00
0425 1585	INLETS, DT BOT, TYPE H, PARTIAL	EA	3		$0.00
0425 1589	INLETS, DT BOT, TYPE H, MODIFY	EA	3		$0.00
0425 1601	INLETS, DT BOT, TYPE J, <10'	EA	3		$0.00
0425 1602	INLETS, DT BOT, TYPE J, >10'	EA	3		$0.00
0425 1603	INLETS, DT BOT, TYPE J, J BOT, <10'	EA	3		$0.00
0425 1604	INLETS, DT BOT, TYPE J, JBOT,>10'	EA	3		$0.00
0425 1605	INLETS, DT BOT, TYPE J, PARTIAL	EA	3		$0.00
0425 1609	INLETS, DT BOT, TYPE J, MODIFY	EA	3		$0.00
0425 1611	INLETS, DITCH BOTTOM, TYPE K, <10'	EA	3		$0.00
0425 1619	INLETS, DITCH BOTTOM, TYPE K, J BOTTOM, MODIFY	EA	3		$0.00
0425 1701	INLETS, GUTTER, TYPE S, <10'	EA	3		$0.00
0425 1702	INLETS, GUTTER, TYPE S, >10'	EA	3		$0.00
0425 1703	INLETS, GUTTER, TYPE S, J BOTTOM <10'	EA	3		$0.00
0425 1704	INLETS, GUTTER, TYPE S, J BOTTOM, >10'	EA	3		$0.00
0425 1705	INLETS, GUTTER, TYPE S, PARTIAL	EA	3		$0.00
0425 1711	INLETS, GUTTER, TYPE V, <10'	EA	3		$0.00
0425 1712	INLETS, GUTTER, TYPE V, >10'	EA	3		$0.00
0425 1713	INLETS, GUTTER, TYPE V, J BOT, <10'	EA	3		$0.00
0425 1714	INLETS, GUTTER, TYPE V, J BOTTOM, >10'	EA	3		$0.00
0425 1715	INLETS, GUTTER, TYPE V, PARTIAL	EA	3		$0.00
0425 1719	INLETS, GUTTER, TYPE V, MODIFY	EA	3		$0.00
0425 1910	INLETS, CLOSED FLUME	EA	3		$0.00
0425 2 41	MANHOLES, P-7, <10'	EA	3		$0.00
0425 2 42	MANHOLES, P-7, >10'	EA	3		$0.00
0425 2 43	MANHOLES, P-7, PARTIAL	EA	3		$0.00
0425 2 61	MANHOLES, P-8, <10'	EA	3		$0.00
0425 2 62	MANHOLES, P-8, >10'	EA	3		$0.00

0425 2 63	MANHOLES, P-8, PARTIAL	EA	3		$0.00
0425 2 71	MANHOLES, J-7, <10'	EA	3		$0.00
0425 2 72	MANHOLES, J-7, >10'	EA	3		$0.00
0425 2 73	MANHOLES, J-7, PARTIAL	EA	3		$0.00
0425 2 91	MANHOLES, J-8, <10'	EA	3		$0.00
0425 2 92	MANHOLES, J-8, >10'	EA	3		$0.00
0425 2 93	MANHOLES, J-8, PARTIAL	EA	3		$0.00
0425 2110	MANHOLES, REPAIR	EA	3		$0.00
0425 3 41	JUNCTION BOX, DRAINAGE, P-7, <10'	EA	3		$0.00
0425 3 42	JUNCTION BOXES, P-7, >10'	EA	3		$0.00
0425 3 43	JUNCTION BOX, DRAINAGE, P-7, PARTIAL	EA	3		$0.00
0425 3 50	JUNCTION BOX, DRAINAGE, REPAIR	EA	3		$0.00
0425 3 61	JUNCTION BOXES, J-7, <10'	EA	3		$0.00
0425 3 62	JUNCTION BOXES, J-7, >10'	EA	3		$0.00
0425 3 63	JUNCTION BOXES, DRAINAGE, J-7, PARTIAL	EA	3		$0.00
0425 4	INLETS, ADJUST	EA	3		$0.00
0425 5	MANHOLE, ADJUST	EA	3		$0.00
0425 6	VALVE BOXES, ADJUST	EA	3		$0.00
0425 7	MANHOLE COVER- REPLACE	EA	3		$0.00
0425 8	DRAINAGE STRUCTURES, MISCELLANEOUS, ADJUST	EA	3		$0.00
0425 11	MODIFY EXISTING DRAINAGE STRUCTURE	EA	3		$0.00
0425 14 1	GRATE FOR EXISTING DRAINAGE STRUCTURE, FURNISH AND INSTALL	SF	3		$0.00
0425 15 41	INLET TOP, REPAIR, CURB INLET	EA	3		$0.00
0425 15 42	INLET TOP, REPAIR, DITCH BOTTOM INLET	EA	3		$0.00
0425 15 51	INLET TOP, REPLACE, CURB INLET	EA	3		$0.00
0425 15 52	INLET TOP, REPLACE, DITCH BOTTOM INLET	EA	3		$0.00
0425 16 11	DRAINAGE MANHOLE- REPLACE TOP AND RIM	EA	3		$0.00
0425 82	REPLACE GRATE	EA	3		$0.00
0430 94 1	DESILTING PIPE, 0 - 24"	LF	50		$0.00

0430 94 2	DESILTING PIPE, 25 - 36"	LF	50		$0.00
430173112	PIPE CULVERT OPTIONAL MATERIAL, ROUND, 12", GUTTER DRAIN	LF	50		$0.00
430173115	PIPE CULVERT OPTIONAL MATERIAL, ROUND, 15", GUTTER DRAIN	LF	50		$0.00
430173118	PIPE CULVERT OPTIONAL MATERIAL, ROUND, 18", GUTTER DRAIN	LF	50		$0.00
430173124	PIPE CULVERT OPTIONAL MATERIAL, ROUND, 24", GUTTER DRAIN	LF	50		$0.00
430173130	PIPE CULVERT OPTIONAL MATERIAL, ROUND, 30", GUTTER DRAIN	LF	50		$0.00
430173136	PIPE CULVERT OPTIONAL MATERIAL, ROUND, 36", GUTTER DRAIN	LF	50		$0.00
430173142	PIPE CULVERT, OPTIONAL MATERIAL, ROUND, 42", GUTTER DRAIN	LF	50		$0.00
430173148	PIPE CULVERT, OPTIONAL MATERIAL, ROUND, 48" GUTTER DRAIN	LF	50		$0.00
430173218	PIPE CULVERT OPTIONAL MATERIAL, OTHER/ELLIPTICAL, 18", GUTTER DRAIN	LF	50		$0.00
430174112	PIPE CULVERT, OPTIONAL MATERIAL, ROUND, 12"SD	LF	50		$0.00
430174115	PIPE CULVERT, OPTIONAL MATERIAL, ROUND, 15"SD	LF	50		$0.00
430174118	PIPE CULVERT, OPTIONAL MATERIAL, ROUND, 18"SD	LF	50		$0.00
430174124	PIPE CULVERT, OPTIONAL MATERIAL, ROUND, 24"SD	LF	50		$0.00
430174130	PIPE CULVERT, OPTIONAL MATERIAL, ROUND, 30"SD	LF	50		$0.00
430174142	PIPE CULVERT, OPTIONAL MATERIAL, ROUND, 42"SD	LF	50		$0.00
430174148	PIPE CULVERT, OPTIONAL MATERIAL, ROUND, 48"SD	LF	50		$0.00
430174154	PIPE CULVERT, OPTIONAL MATERIAL, ROUND, 54"SD	LF	50		$0.00
430174160	PIPE CULVERT, OPTIONAL MATERIAL, ROUND, 60"SD	LF	50		$0.00
430174172	PIPE CULVERT, OPTIONAL MATERIAL, ROUND, 72"SD	LF	50		$0.00
430174215	PIPE CULVERT, OPTIONAL MATERIAL, OTHER SHAPE - ELLIP/ARCH, 15"SD	LF	50		$0.00
430174218	PIPE CULVERT, OPTIONAL MATERIAL, OTHER SHAPE - ELLIP/ARCH, 18"SD	LF	50		$0.00
430174224	PIPE CULVERT, OPTIONAL MATERIAL, OTHER SHAPE - ELLIP/ARCH, 24"SD	LF	50		$0.00
430174230	PIPE CULVERT, OPTIONAL MATERIAL, OTHER SHAPE - ELLIP/ARCH, 30"SD	LF	50		$0.00
430174236	PIPE CULVERT, OPTIONAL MATERIAL, OTHER SHAPE - ELLIP/ARCH, 36"SD	LF	50		$0.00
430174242	PIPE CULVERT, OPTIONAL MATERIAL, ELLIP/OTHER, 42"SD	LF	50		$0.00
430174248	PIPE CULVERT,OPTIONAL MATERIAL,OTHER-ELIP/ARCH, 48"SD	LF	50		$0.00
430175112	PIPE CULVERT,OPTIONAL MATERIAL,ROUND, 12"S/CD	LF	50		$0.00
430175115	PIPE CULVERT,OPTIONAL MATERIAL,ROUND, 15"S/CD	LF	50		$0.00

430175118	PIPE CULVERT, OPTIONAL MATERIAL, ROUND, 18"S/CD	LF	250		$0.00
430175124	PIPE CULVERT, OPTIONAL MATERIAL, ROUND, 24"S/CD	LF	50		$0.00
430175130	PIPE CULVERT, OPT MATERIAL, ROUND, 30"S/CD	LF	50		$0.00
430175136	PIPE CULVERT, OPT MATERIAL, ROUND, 36"S/CD	LF	50		$0.00
430175140	PIPE CULVERT, OPT MATERIAL, ROUND, 40"S/CD	LF	50		$0.00
430175142	PIPE CULVERT, OPT MATERIAL, ROUND, 42"S/CD	LF	50		$0.00
430175148	PIPE CULVERT, OPT MATERIAL, ROUND, 48"S/CD	LF	50		$0.00
430175154	PIPE CULVERT, OPT MATERIAL, ROUND, 54"S/CD	LF	50		$0.00
430175160	PIPE CULVERT, OPT MATERIAL, ROUND, 60"S/CD	LF	50		$0.00
430175166	PIPE CULVERT, OPT MATERIAL, ROUND, 66"S/CD	LF	50		$0.00
430175172	PIPE CULVERT, OPT MATERIAL, ROUND, 72"S/CD	LF	50		$0.00
430175178	PIPE CULVERT, OPT MATERIAL, ROUND, 78" STORM/CROSS DRAIN	LF	50		$0.00
430175184	PIPE CULVERT, OPT MATERIAL, ROUND, 84"S/CD	LF	50		$0.00
430175196	PIPE CULVERT, OPT MATERIAL, ROUND, 96"S/CD	LF	50		$0.00
430175215	PIPE CULVERT,OPTIONAL MATERIAL,OTHER-ELIP/ARCH, 15"S/CD	LF	50		$0.00
430175218	PIPE CULVERT,OPTIONAL MATERIAL,OTHER-ELIP/ARCH, 18"S/CD	LF	50		$0.00
430175224	PIPE CULVERT,OPTIONAL MATERIAL,OTHER SHAPE-ELIP/ARCH, 24"S/CD	LF	50		$0.00
430175230	PIPE CULVERT, OPT MATERIAL, OTHER SHAPE - ELIP/ARCH, 30"S/CD	LF	50		$0.00
430175236	PIPE CULVERT, OPT MATERIAL, OTHER SHAPE - ELIP/ARCH, 36"S/CD	LF	50		$0.00
430175242	PIPE CULVERT, OPT MATERIAL, OTHER SHAPE - ELIP/ARCH, 42"S/CD	LF	50		$0.00
430175248	PIPE CULVERT, OPT MATERIAL, OTHER SHAPE - ELIP/ARCH, 48"S/CD	LF	50		$0.00
430175254	PIPE CULVERT, OPT MATERIAL, OTHER SHAPE - ELIP/ARCH, 54"S/CD	LF	50		$0.00
430175260	PIPE CULVERT, OPT MATERIAL, OTHER SHAPE - ELIP/ARCH, 60"S/CD	LF	50		$0.00
430175266	PIPE CULVERT, OPT MATERIAL, OTHER SHAPE - ELIP/ARCH, 66"S/CD	LF	50		$0.00
430175272	PIPE CULVERT, OPT MATERIAL, OTHER SHAPE - ELIP/ARCH, 72"S/CD	LF	50		$0.00
430175299	PIPE CULVERT,OPTIONAL MATERIAL,OTHER SHAPE-ELIP/ARCH, 99" OR >, S/CD	LF	50		$0.00
430185118	PIPE CULVERT,OPTIONAL MATERIAL,ROUND, JACK & BORE, 18" , STORM AND CROSS DRAIN	LF	50		$0.00
430185124	PIPE CULVERT,OPTIONAL MATERIAL,ROUND, JACK & BORE, 24", STORM AND CROSS DRAIN	LF	50		$0.00
430185130	PIPE CULVERT,OPTIONAL MATERIAL,ROUND, JACK & BORE, 30", STORM AND CROSS DRAIN	LF	50		$0.00

430185136	PIPE CULVERT,OPTIONAL MATERIAL,ROUND, JACK & BORE, 36", STORM AND CROSS DRAIN	LF	50		$0.00
430185142	PIPE CULVERT,OPTIONAL MATERIAL,ROUND, JACK & BORE, 42", STORM AND CROSS DRAIN	LF	50		$0.00
430185148	PIPE CULVERT,OPTIONAL MATERIAL,ROUND, JACK & BORE, 48", STORM AND CROSS DRAIN	LF	50		$0.00
430185154	PIPE CULVERT,OPTIONAL MATERIAL,ROUND, JACK & BORE, 54", STORM AND CROSS DRAIN	LF	50		$0.00
430185160	PIPE CULVERT,OPTIONAL MATERIAL,ROUND, JACK & BORE, 60" , STORM AND CROSS DRAIN	LF	50		$0.00
430185166	PIPE CULVERT,OPTIONAL MATERIAL,ROUND, JACK & BORE, 66" , STORM AND CROSS DRAIN	LF	50		$0.00
430185178	PIPE CULVERT,OPTIONAL MATERIAL,ROUND, JACK & BORE, 78" , STORM AND CROSS DRAIN	LF	50		$0.00
0430200 21	FLARED END SECTION, CONCRETE, 12"	EA	3		$0.00
0430200 23	FLARED END SECTION, CONCRETE, 15"	EA	3		$0.00
0430200 25	FLARED END SECTION, CONCRETE, 18"	EA	3		$0.00
0430200 29	FLARED END SECTION, CONCRETE, 24"	EA	3		$0.00
0430200 33	FLARED END SECTION, CONCRETE, 30"	EA	3		$0.00
0430200 38	FLARED END SECTION, CONCRETE, 36"	EA	3		$0.00
0430200 40	FLARED END SECTION, CONCRETE, 42"	EA	3		$0.00
0430200 41	FLARED END SECTION, CONCRETE, 48"	EA	3		$0.00
0430200 42	FLARED END SECTION, CONCRETE, 54"	EA	3		$0.00
0430200 43	FLARED END SECTION, CONCRETE, 60"	EA	3		$0.00
0430200 44	FLARED END SECTION, CONCRETE, 66"	EA	3		$0.00
0430200 45	FLARED END SECTION, CONCRETE, 72"	EA	3		$0.00
430600025	U-ENDWALL, STD 260, 1:6 SLOPE, 18"PIPE	EA	3		$0.00
430600125	U-ENDWALL, STD 260, 1:4 SLOPE, 18"PIPE	EA	3		$0.00
430602123	U-ENDWALL, WITH GRATE,STD INDEX 260, 1:4 SLOPE, 15"	EA	3		$0.00
430602125	U-ENDWALL, WITH GRATE,STD 260, 1:4 SLOPE, 18"	EA	3		$0.00
430602129	U-ENDWALL, WITH GRATE,STD 260, 1:4 SLOPE, 24"	EA	3		$0.00
430602133	U-ENDWALL, WITH GRATE,STD INDEX 260, 1:4 SLOPE, 30"	EA	3		$0.00
430610025	U-ENDWALL, STD 261, 1:6 SLOPE, 18"PIPE	EA	3		$0.00
430610029	U-ENDWALL, STD 261, 1:6 SLOPE, 24"PIPE	EA	3		$0.00
430610033	U-ENDWALL, STD 261, 1:6 SLOPE, 30"PIPE	EA	3		$0.00
430610123	U-ENDWALL, STD 261, 1:4 SLOPE, 15"PIPE	EA	3		$0.00

430610125	U-ENDWALL, STD 261, 1:4 SLOPE, 18"PIPE	EA	3		$0.00
430610129	U-ENDWALL, STD 261, 1:4 SLOPE, 24"PIPE	EA	3		$0.00
430610133	U-ENDWALL, STD 261, 1:4 SLOPE, 30"PIPE	EA	3		$0.00
430610223	U-ENDWALL, STD 261, 1:3 SLOPE, 15"PIPE	EA	3		$0.00
430610225	U-ENDWALL, STD 261, 1:3 SLOPE, 18"PIPE	EA	3		$0.00
430610229	U-ENDWALL, STD 261, 1:3 SLOPE, 24"PIPE	EA	3		$0.00
430610233	U-ENDWALL, STD 261, 1:3 SLOPE, 30"PIPE	EA	3		$0.00
430610323	U-ENDWALL, STD 261, 1:2 SLOPE, 15"PIPE	EA	3		$0.00
430610325	U-ENDWALL, STD 261, 1:2 SLOPE, 18"PIPE	EA	3		$0.00
430610329	U-ENDWALL, STD 261,1:2 SLOPE, 24"PIPE	EA	3		$0.00
430611023	U-ENDWALL, STD 261, BAFFLES, 1:6 SLOPE, 15"PIPE	EA	3		$0.00
430611025	U-ENDWALL, STD 261, BAFFLES, 1:6 SLOPE, 18"PIPE	EA	3		$0.00
430611029	U-ENDWALL, STD 261, BAFFLES, 1:6 SLOPE, 24"PIPE	EA	3		$0.00
430611033	U-ENDWALL, STD 261, BAFFLES, 1:6 SLOPE, 30"PIPE	EA	3		$0.00
430611123	U-ENDWALL WITH BAFFLES, STD 261, 1:4 SLOPE, 15"PIPE	EA	3		$0.00
430611125	U-ENDWALL WITH BAFFLES, STD 261, 1:4 SLOPE, 18"PIPE	EA	3		$0.00
430611129	U-ENDWALL WITH BAFFLES, STD 261, 1:4 SLOPE, 24"PIPE	EA	3		$0.00
430611133	U-ENDWALL WITH BAFFLES,STD 261,1:4 SLOPE,30"PIPE	EA	3		$0.00
430611223	U-ENDWALL WITH BAFFLES, STD 261, 1:3 SLOPE, 15"PIPE	EA	3		$0.00
430611225	U-ENDWALL WITH BAFFLES, STD 261, 1:3 SLOPE, 18"PIPE	EA	3		$0.00
430611229	U-ENDWALL WITH BAFFLES, STD 261, 1:3 SLOPE, 24"PIPE	EA	3		$0.00
430611233	U-ENDWALL, STD 261, BAFFLES, 1:3 SLOPE, 30"PIPE	EA	3		$0.00
430611323	U-ENDWALL WITH BAFFLES, STD 261, 1:2 SLOPE, 15"PIPE	EA	3		$0.00
430611325	U-ENDWALL WITH BAFFLES, STD 261, 1:2 SLOPE, 18"PIPE	EA	3		$0.00
430611329	U-ENDWALL WITH BAFFLES, STD 261, 1:2 SLOPE, 24"PIPE	EA	3		$0.00
430611333	U-ENDWALL, BAFFLES, STD 261, 1:2 SLOPE, 30"PIPE	EA	3		$0.00
430612023	U-ENDWALL WITH GRATE, STD 261, 1:6 SLOPE, 15"	EA	3		$0.00
430612025	U-ENDWALL WITH GRATE, STD 261, 1:6 SLOPE, 18"PIPE	EA	3		$0.00
430612029	U-ENDWALL WITH GRATE, STD 261, 1:6 SLOPE, 24"PIPE	EA	3		$0.00

430612033	U-ENDWALL WITH GRATE, STD 261, 1:6 SLOPE, 30"	EA	3		$0.00
430612125	U-ENDWALL WITH GRATE, STD 261, 1:4 SLOPE, 18"PIPE	EA	3		$0.00
430612129	U-ENDWALL WITH GRATE, STD 261, 1:4 SLOPE, 24"PIPE	EA	3		$0.00
430612133	U-ENDWALL, GRATE, STD 261, 1:4 SLOPE, 30" PIPE	EA	3		$0.00
430612329	U-ENDWALL WITH GRATE, STD 261, 1:2 SLOPE, 24"PIPE	EA	3		$0.00
430612333	U-ENDWALL, GRATE, STD 261, 1:2 SLOPE, 30" PIPE	EA	3		$0.00
430613025	U-ENDWALL, WITH BAFFLES & GRATE, STD 261,1:6 SLOPE, 18"	EA	3		$0.00
430613029	U-ENDWALL, WITH BAFFLES & GRATE, STD 261,1:6 SLOPE, 24"PIPE	EA	3		$0.00
430613033	U-ENDWALL, WITH BAFFLES & GRATE, STD 261,1:6 SLOPE, 30"	EA	3		$0.00
430613123	U-ENDWALL, WITH BAFFLES & GRATE, STD 261,1:4 SLOPE,15"PIPE	EA	3		$0.00
430613125	U-ENDWALL, WITH BAFFLES & GRATE, STD 261,1:4 SLOPE,18"PIPE	EA	3		$0.00
430613129	U-ENDWALL, WITH BAFFLES & GRATE, STD 261,1:4 SLOPE, 24"PIPE	EA	3		$0.00
430613133	U-ENDWALL, WITH BAFFLES & GRATE, STD 261,1:4 SLOPE,30"PIPE	EA	3		$0.00
430613225	U-ENDWALL, WITH BAFFLES & GRATE, STD 261,1:3 SLOPE,18"PIPE	EA	3		$0.00
430613229	U-ENDWALL, WITH BAFFLES & GRATE, STD 261,1:3 SLOPE, 24 "PIPE	EA	3		$0.00
430613233	U-ENDWALL, WITH BAFFLES & GRATE, STD 261,1:3 SLOPE,30"PIPE	EA	3		$0.00
430613325	U-ENDWALL, WITH BAFFLES & GRATE, STD 261,1:2 SLOPE,18"PIPE	EA	3		$0.00
430613333	U-ENDWALL, WITH BAFFLES & GRATE, STD 261,1:2 SLOPE,30"PIPE	EA	3		$0.00
430830	PIPE FILLING AND PLUGGING- PLACE OUT OF SERVICE	CY	20		$0.00
430950	DESILTING CONCRETE BOX CULVERT	CY	20		$0.00
0430963 1	PVC PIPE FOR BACK OF SIDEWALK, 4"	LF	50		$0.00
430982120	MITERED END SECTION, OPTIONAL ROUND, 8" CD	EA	3		$0.00
430982121	MITERED END SECTION, OPTIONAL ROUND, 12" CD	EA	3		$0.00
430982123	MITERED END SECTION, OPTIONAL ROUND, 15" CD	EA	3		$0.00
430982125	MITERED END SECTION, OPTIONAL ROUND, 18" CD	EA	3		$0.00
430982129	MITERED END SECTION, OPTIONAL ROUND, 24" CD	EA	3		$0.00
430982133	MITERED END SECTION, OPTIONAL ROUND, 30" CD	EA	3		$0.00
430982138	MITERED END SECTION, OPTIONAL ROUND, 36" CD	EA	3		$0.00
430982140	MITERED END SECTION, OPTIONAL ROUND, 42" CD	EA	3		$0.00

430982141	MITERED END SECTION, OPTIONAL ROUND, 48" CD	EA	3		$0.00
430982142	MITERED END SECTION, OPTIONAL ROUND, 54" CD	EA	3		$0.00
430982143	MITERED END SECTION, OPTIONAL ROUND, 60" CD	EA	3		$0.00
430982144	MITERED END SECTION, OPTIONAL ROUND, 66" CD	EA	3		$0.00
430982145	MITERED END SECTION, OPTIONAL ROUND, 72" CD	EA	3		$0.00
430982147	MITERED END SECTION, OPTIONAL ROUND, 84" CD	EA	3		$0.00
430982623	MITERED END SECTION, OPTIONAL - ELLIPTICAL / ARCH, 15" CD	EA	3		$0.00
430982625	MITERED END SECTION, OPTIONAL - ELLIPTICAL / ARCH, 18" CD	EA	3		$0.00
430982629	MITERED END SECTION, OPTIONAL - ELLIPTICAL / ARCH, 24" CD	EA	3		$0.00
430982633	MITERED END SECTION, OPTIONAL - ELLIPTICAL / ARCH, 30" CD	EA	3		$0.00
430982638	MITERED END SECTION, OPTIONAL - ELLIPTICAL / ARCH, 36" CD	EA	3		$0.00
430982640	MITERED END SECTION, OPTIONAL - ELLIPTICAL / ARCH, 42" CD	EA	3		$0.00
430982641	MITERED END SECTION, OPTIONAL - ELLIPTICAL / ARCH, 48" CD	EA	3		$0.00
430982642	MITERED END SECTION, OPTIONAL - ELLIPTICAL / ARCH, 54" CD	EA	3		$0.00
430982643	MITERED END SECTION, OPTIONAL - ELLIPTICAL / ARCH, 60" CD	EA	3		$0.00
430982645	MITERED END SECTION, OPTIONAL - ELLIPTICAL / ARCH, 72" CD	EA	3		$0.00
430984120	MITERED END SECTION, OPTIONAL ROUND, 8" SD	EA	3		$0.00
430984121	MITERED END SECTION, OPTIONAL ROUND, 12" SD	EA	3		$0.00
430984123	MITERED END SECTION, OPTIONAL ROUND, 15" SD	EA	3		$0.00
430984125	MITERED END SECTION, OPTIONAL ROUND, 18" SD	EA	3		$0.00
430984129	MITERED END SECTION, OPTIONAL ROUND, 24" SD	EA	3		$0.00
430984133	MITERED END SECTION , OPTIONAL ROUND, 30" SD	EA	3		$0.00
430984138	MITERED END SECTION , OPTIONAL ROUND, 36" SIDE DRAIN	EA	3		$0.00
430984140	MITERED END SECTION , OPTIONAL ROUND, 42" SD	EA	3		$0.00
430984141	MITERED END SECTION , OPTIONAL ROUND, 48" SD	EA	3		$0.00
430984142	MITERED END SECTION , OPTIONAL ROUND, 54" SD	EA	3		$0.00
430984143	MITERED END SECTION , OPTIONAL ROUND, 60" SD	EA	3		$0.00
430984144	MITERED END SECTION, OPTIONAL ROUND, 66" SIDE DRAIN	EA	3		$0.00
430984145	MITERED END SECTION, OPTIONAL ROUND, 72" SIDE DRAIN	EA	3		$0.00

430984147	MITERED END SECTION, OPTIONAL ROUND, 84" SD	EA	3		$0.00
430984623	MITERED END SECTION, OPTIONAL OTHER - ELLIP/ARCH, 15" SD	EA	3		$0.00
430984625	MITERED END SECT, OPTIONAL - ELLIPTICAL / ARCH, 18" SD	EA	3		$0.00
430984629	MITERED END SECT, OPTIONAL - ELLIPTICAL / ARCH, 24" SD	EA	3		$0.00
430984633	MITERED END SECT, OPTIONAL /ELLIP/ARCH, 30" SD	EA	3		$0.00
430984638	MITERED END SECT, OPTIONAL /ELLIP/ARCH, 36" SD	EA	3		$0.00
430984640	MITERED END SECT, OPTIONAL /ELLIP/ARCH, 42" SD	EA	3		$0.00
430984641	MITERED END SECT, OPTIONAL /ELLIP/ARCH, 48" SD	EA	3		$0.00
430984642	MITERED END SECT, OPTIONAL /ELLIP/ARCH, 54" SD	EA	3		$0.00
430984643	MITERED END SECTION, OPTIONAL SHAPE /ELLIP/ARCH, 60" SIDE DRAIN	EA	3		$0.00
430984644	MITERED END SECT, OPTIONAL /ELLIP/ARCH, 66" SD	EA	3		$0.00
430984645	MITERED END SECT, OPTIONAL /ELLIP/ARCH, 72" SD	EA	3		$0.00
430990	MITERED END SECT, REPLACE GRATE	EA	3		$0.00
0431 1 1	PIPE LINER, OPTIONAL MATERIAL, 0-24"	LF	50		$0.00
0431 1 2	PIPE LINER, OPTIONAL MATERIAL, 25-36"	LF	50		$0.00
0431 1 3	PIPE LINER, OPTIONAL MATERIAL, 37-48"	LF	50		$0.00
0431 1 4	PIPE LINER, OPTIONAL MATERIAL, 49 - 60"	LF	50		$0.00
0431 1 5	PIPE LINER, OPTIONAL MATERIAL, 61" AND GREATER	LF	50		$0.00
0436 1 1	TRENCH DRAIN, STANDARD	LF	50		$0.00
0440 1 10	UNDERDRAIN, TYPE I	LF	50		$0.00
0440 1 20	UNDERDRAIN, TYPE II	LF	50		$0.00
0440 1 30	UNDERDRAIN, TYPE III	LF	50		$0.00
0440 1 50	UNDERDRAIN, TYPE V	LF	50		$0.00
0440 70	UNDERDRAIN INSPECTION BOX	EA	5		$0.00
0440 73 1	UNDERDRAIN OUTLET PIPE, 4"	LF	50		$0.00
0440 73 2	UNDERDRAIN OUTLET PIPE, 6"	LF	50		$0.00
0440 73 3	UNDERDRAIN OUTLET PIPE, 8"	LF	50		$0.00
0440 73 4	UNDERDRAIN OUTLET PIPE, 10"	LF	50		$0.00
0440 73 5	UNDERDRAIN OUTLET PIPE, 12"	LF	50		$0.00

0443 70 3	FRENCH DRAIN, 18"	LF	50		$0.00
0443 70 4	FRENCH DRAIN, 24"	LF	50		$0.00
0443 70 5	FRENCH DRAIN, 30"	LF	50		$0.00
0443 70 6	FRENCH DRAIN, 36"	LF	50		$0.00
0443 70 7	FRENCH DRAIN, 42"	LF	50		$0.00
0443 70 8	FRENCH DRAIN, 48"	LF	50		$0.00
0443 70 9	FRENCH DRAIN, 54"	LF	50		$0.00
0443 70 10	FRENCH DRAIN, 60"	LF	50		$0.00
0443 72 10	FRENCH DRAIN- AGGREGATE WITHOUT PIPE, 0-0.9’ DEPTH	SY	10		$0.00
0443 72 11	FRENCH DRAIN- AGGREGATE WITHOUT PIPE, 1-1.9’ DEPTH	SY	10		$0.00
0443 72 12	FRENCH DRAIN- AGGREGATE WITHOUT PIPE, 2-2.9’ DEPTH	SY	10		$0.00
0443 72 13	FRENCH DRAIN- AGGREGATE WITHOUT PIPE, 3-3.9’ DEPTH	SY	10		$0.00
0443 72 14	FRENCH DRAIN- AGGREGATE WITHOUT PIPE, 4-4.9’ DEPTH	SY	10		$0.00
0446 1 1	EDGEDRAIN DRAINCRETE, STANDARD	LF	50		$0.00
0446 71 1	EDGEDRAIN OUTLET PIPE, 4"	LF	50		$0.00
0515 1 1	PIPE HANDRAIL - GUIDERAIL, STEEL	LF	50		$0.00
0515 1 2	PIPE HANDRAIL - GUIDERAIL, ALUMINUM	LF	50		$0.00
0515 1 41	PIPE HANDRAIL - GUIDERAIL, RELOCATE, STEEL	LF	50		$0.00
0515 1 42	PIPE HANDRAIL - GUIDERAIL, RELOCATE, ALUMINUM	LF	50		$0.00
0515 2111	PEDESTRIAN / BICYCLE RAILING, NS, 42" TYPE 1	LF	50		$0.00
0515 2211	PEDESTRIAN / BICYCLE RAILING, STEEL, 42" TYPE 1	LF	50		$0.00
0515 2212	PEDESTRIAN / BICYCLE RAILING, STEEL, 42" TYPE 2	LF	50		$0.00
0515 2213	PEDESTRIAN / BICYCLE RAILING, STEEL, 42" TYPE 3	LF	50		$0.00
0515 2221	PEDESTRIAN/ BICYCLE RAILING, STEEL ONLY,54" TYPE 1	LF	50		$0.00
0515 2231	PEDESTRIAN/ BICYCLE RAILING, STEEL ONLY,48" TYPE 1	LF	50		$0.00
0515 2311	PEDESTRIAN/ BICYCLE RAILING, ALUMINUM ONLY,42" TYPE 1	LF	50		$0.00
0515 2312	PEDESTRIAN / BICYCLE RAILING, ALUMINUM, 42" TYPE 2	LF	50		$0.00
0515 2313	PEDESTRIAN / BICYCLE RAILING, ALUMINUM, 42" TYPE 3	LF	50		$0.00
0515 2321	PEDESTRIAN/ BICYCLE RAILING, ALUMINUM ONLY,54" TYPE 1	LF	50		$0.00

0515 2411	PEDESTRIAN / BICYCLE RAILING, SPECIAL MATERIALS- WEATHERING STEEL, 42" TYPE 1	LF	50		$0.00
0515 2500	PEDESTRIAN / BICYCLE RAILING, RELOCATE	LF	50		$0.00
0519 78	BOLLARDS	EA	10		$0.00
0520 1 7	CONCRETE CURB & GUTTER, TYPE E	LF	1000		$0.00
0520 1 10	CONCRETE CURB & GUTTER, TYPE F	LF	5000		$0.00
0520 1 11	CONCRETE CURB & GUTTER, VARIABLE HEIGHT TYPE F	LF	100		$0.00
0520 1 12	CONCRETE CURB & GUTTER, TYPE F WITH SPECIAL GUTTER PROFILE	LF	100		$0.00
0520 2 1	CONCRETE CURB, TYPE A	LF	100		$0.00
0520 2 2	CONCRETE CURB, TYPE B	LF	1000		$0.00
0520 2 4	CONCRETE CURB, TYPE D	LF	1000		$0.00
0520 3	VALLEY GUTTER- CONCRETE	LF	100		$0.00
0520 5 11	TRAFFIC SEPARATOR CONCRETE - TYPE I, 4' WIDE	LF	50		$0.00
0520 5 12	TRAFFIC SEPARATOR CONCRETE - TYPE I, 6' WIDE	LF	50		$0.00
520 5 16	TRAFFIC SEPARATOR CONCRETE- TYPE I, 8.5' WIDE	LF	50		$0.00
0520 5 21	TRAFFIC SEPARATOR - CONCRETE, TYPE II, 4' WIDE	LF	50		$0.00
0520 5 22	TRAFFIC SEPARATOR - CONCRETE, TYPE II, 6' WIDE	LF	50		$0.00
0520 5 26	TRAFFIC SEPARATOR CONCRETE- TYPE II, 8.5' WIDE	LF	50		$0.00
0520 5 41	TRAFFIC SEPARATOR CONCRETE, TYPE IV, 4' WIDE	LF	50		$0.00
0520 5 42	TRAFFIC SEPARATOR CONCRETE, TYPE IV, 6' WIDE	LF	50		$0.00
0520 5 46	TRAFFIC SEPARATOR CONCRETE, TYPE IV, 8.5' WIDE	LF	50		$0.00
0520 5 51	TRAF SEP CONC, TYPE V, 4' WIDE	LF	50		$0.00
0520 6	SHOULDER GUTTER- CONCRETE	LF	50		$0.00
0520 70	CONCRETE TRAFFIC SEPARATOR, SPECIAL - VARIABLE WIDTH	SY	50		$0.00
0521 72 2	SHOULDER CONCRETE BARRIER WALL, BOX CULVERT	LF	100		$0.00
0521 72 3	SHOULDER CONCRETE BARRIER WALL, RIGID-SHOULDER	LF	100		$0.00
0521 72 4	SHOULDER CONCRETE BARRIER WALL, RIGID RETAINING	LF	100		$0.00
0521 72 5	SHOULDER CONCRETE BARRIER WALL, RIGID-CURB & GUTTER	LF	100		$0.00
0521 72 10	SHOULDER CONCRETE BARRIER WALL, RIGID SHOULDER 42"	LF	100		$0.00
0521 72 11	SHOULDER CONCRETE BARRIER WALL, RIGID SHOULDER 54"	LF	100		$0.00

0521 73	CONCRETE BARRIER WALL, REMOVAL	LF	20		$0.00
0522 1	CONCRETE SIDEWALK AND DRIVEWAY, 4" THICK	SY	3000		$0.00
0522 2	CONCRETE SIDEWALK AND DRIVEWAY, 6" THICK	SY	500		$0.00
0522 3	BUS BOARDING PAD - CONCRETE	SY	50		$0.00
0522 4	BUS SHELTER PAD - CONCRETE	SY	50		$0.00
0524 1 1	CONCRETE DITCH PAVT, NON REINFORCED, 3"	SY	10		$0.00
0524 1 2	CONCRETE DITCH PAVEMENT, NON REINFORCED, 4"	SY	10		$0.00
0524 1 3	CONCRETE DITCH PAVEMENT, NON REINFORCED, 5"	SY	10		$0.00
0524 1 4	CONCRETE DITCH PAVEMENT, NON REINFORCED, 6"	SY	10		$0.00
0524 1 19	CONCRETE DITCH PAVT, 3", REINFORCED	SY	10		$0.00
0524 1 29	CONCRETE DITCH PAVEMENT, 4", REINFORCED	SY	10		$0.00
0524 1 49	CONCRETE DITCH PAVEMENT, 6", REINFORCED	SY	10		$0.00
0524 2 1	CONCRETE SLOPE PAVEMENT,NON REINFORCED, 3"	SY	10		$0.00
0524 2 2	CONCRETE SLOPE PAVEMENT,NON REINFORCED, 4"	SY	10		$0.00
0524 2 4	CONCRETE SLOPE PAVEMENT,NON REINFORCED, 6"	SY	10		$0.00
0524 2 29	CONCRETE SLOPE PAVEMENT, 4", REINFORCED	SY	10		$0.00
0524 2 49	CONCRETE SLOPE PAVEMENT, 6", REINFORCED	SY	10		$0.00
0524 3	CONC CORE DITCH BLOCKS	CY	10		$0.00
0526 1 1	PAVERS, ARCHITECTURAL, ROADWAY	SY	50		$0.00
0526 1 2	PAVERS, ARCHITECTURAL, SIDEWALK	SY	50		$0.00
0527 2	DETECTABLE WARNINGS	SF	1000		$0.00
0530 1	RIPRAP, SAND-CEMENT	CY	50		$0.00
0530 3 3	RIPRAP- RUBBLE, BANK AND SHORE	TN	10		$0.00
0530 3 4	RIPRAP, RUBBLE, F&I, DITCH LINING	TN	10		$0.00
0530 3 5	RIPRAP- RUBBLE, COASTAL SHORE- LARGE BOULDERS	TN	10		$0.00
0530 74	BEDDING STONE	TN	10		$0.00
0536 1 0	GUARDRAIL -ROADWAY, GENERAL TL-2	LF	250		$0.00
0536 1 1	GUARDRAIL -ROADWAY, GENERAL TL-3	LF	250		$0.00
0536 1 3	GUARDRAIL ROADWAY, DOUBLE FACE	LF	250		$0.00

0536 1 11	GUARDRAIL, ROADWAY, MODIFIED THRIE BEAM	LF	250		$0.00
0536 1 12	GUARDRAIL ROADWAY, MODIFIED THRIE BEAM-DOUBLE FACE	LF	250		$0.00
0536 5 1	RUB RAIL FOR GUARDRAIL, SINGLE SIDED	LF	250		$0.00
0536 5 2	RUB RAIL FOR GUARDRAIL, DOUBLE SIDED	LF	250		$0.00
0536 7 1	SPECIAL GUARDRAIL POST- DEEP POST FOR SLOPE BREAK CONDITION-TIMBER OR STEEL	EA	5		$0.00
0536 7 2	SPECIAL GUARDRAIL POST- SPECIAL STEEL POST FOR CONCRETE STRUCTURE MOUNT	EA	5		$0.00
0536 7 3	SPECIAL GUARDRAIL POST- ENCASED POST FOR SHALLOW MOUNT	EA	5		$0.00
0536 7 4	SPECIAL GUARDRAIL POST- FRANGIBLE LEAVE-OUT FOR MOUNTING THROUGH CONCRETE SURFACE	EA	5		$0.00
0536 8 11	APPROACH TRANSITION TO RIGID BARRIER- BRIDGE ANCHORAGE ASSEMBLY CONNECTION, FURNISH & INSTALL	EA	5		$0.00
0536 8 12	APPROACH TRANSITION CONNECTION TO RIGID BARRIER, FURNISH AND INSTALL, TL-2	EA	5		$0.00
0536 8 13	APPROACH TRANSITION CONNECTION TO RIGID BARRIER, FURNISH AND INSTALL, TL-3	EA	5		$0.00
0536 8 40	APPROACH TRANSITION TO RIGID BARRIER- BRIDGE ANCHORAGE ASSEMBLY, RELOCATE	EA	5		$0.00
0536 8 60	APPROACH TRANSITION TO RIGID BARRIER- BRIDGE ANCHORAGE ASSEMBLY, REMOVE	EA	5		$0.00
0536 73	GUARDRAIL REMOVAL	LF	25		$0.00
0536 85 22	GUARDRAIL END ANCHORAGE ASSEMBLY/END TREATMENT- FLARED	EA	2		$0.00
0536 85 24	GUARDRAIL END ANCHORAGE ASSEMBLY/END TREATMENT- PARALLEL	EA	2		$0.00
0536 85 25	GUARDRAIL END ANCHORAGE ASSEMBLY/END TREATMENT- TYPE II	EA	2		$0.00
0536 85 26	GUARDRAIL END ANCHORAGE ASSEMBLY/END TREATMENT- TYPE CRT	EA	2		$0.00
0536 85 27	GUARDRAIL END ANCHORAGE ASSEMBLY/END TREATMENT- DOUBLE FACE TERMINAL	EA	2		$0.00
0538 1	GUARDRAIL- RESET	LF	25		$0.00
0539 80111	OPAQUE VISUAL BARRIER, F&I, CONCRETE, 2' 3"	LF	25		$0.00
0544 74 40	RELOCATE CRASH CUSHION - ALL OPTIONS	EA	2		$0.00
0544 75 1	CRASH CUSHION	EA	2		$0.00
0546 71	RUMBLE STRIPS	PS	10		$0.00
0546 72 52	RUMBLE STRIPS, GROUND-IN, 16" CENTERLINE USED WITH RUMBLE STRIPE	GM	1		$0.00
0546 72 53	RUMBLE STRIPS, GROUND-IN, 8" EDGELINE USED WITH RUMBLE STRIPE	GM	1		$0.00
0546 72 55	RUMBLE STRIPS, GROUND-IN, 16" SHOULDER	GM	1		$0.00
0550 10110	FENCING, TYPE A, 0.0-5.0', STANDARD	LF	25		$0.00
0550 10118	FENCING, TYPE A, 0.0-5.0', TYPE A STANDARD, RESET EXISTING	LF	25		$0.00

0550 10119	FENCING, TYPE A, 0.0-5.0', SPECIAL FEATURES	LF	25		$0.00
0550 10120	FENCING, TYPE A, 5.1-6.0, STANDARD	LF	25		$0.00
0550 10128	FENCING, TYPE A, 5.1-6.0', RESET EXISTING	LF	25		$0.00
0550 10130	FENCING, TYPE A, 6.1-7.0, STANDARD	LF	25		$0.00
0550 10140	FENCING, TYPE A, 7.1-8.0', STANDARD	LF	25		$0.00
0550 10148	FENCING, TYPE A, 7.1-8.0', RESET EXISTING	LF	25		$0.00
0550 10149	FENCING, TYPE A, 7.1-8.0', SPECIAL FEATURES	LF	25		$0.00
0550 10150	FENCING, TYPE A, 8.1-10.0', STANDARD	LF	25		$0.00
0550 10158	FENCING, TYPE A, 8.1-10.0', RESET EXISTING	LF	25		$0.00
0550 10159	FENCING, TYPE A, 8.1-10.0', SPECIAL FEATURES	LF	25		$0.00
0550 10169	FENCING, TYPE A, 10.1-12.0', SPECIAL FEATURES	LF	25		$0.00
0550 10210	FENCING, TYPE B, 0.0-5.0', STANDARD FEATURES	LF	25		$0.00
0550 10212	FENCING, TYPE B, 0.5-5.0', W/ VINYL COATING	LF	25		$0.00
0550 10218	FENCING, TYPE B, 0.0-5.0', RESET EXISTING	LF	25		$0.00
0550 10219	FENCING, TYPE B, 0.0-5.0', SPECIAL FEATURES	LF	25		$0.00
0550 10220	FENCING, TYPE B, 5.1-6.0', STANDARD	LF	25		$0.00
0550 10221	FENCING, TYPE B, 5.1-6.0', W/ BARB WIRE ATTMT	LF	25		$0.00
0550 10222	FENCING, TYPE B, 5.1-6.0, W/ VINYL COATING	LF	25		$0.00
0550 10228	FENCING, TYPE B, 5.1-6.0, RESET EXISTING	LF	25		$0.00
0550 10229	FENCING, TYPE B, 5.1-6.0, SPECIAL FEATURES	LF	25		$0.00
0550 10230	FENCING, TYPE B, 6.1-7.0', STANDARD	LF	25		$0.00
0550 10231	FENCING, TYPE B, 6.1-7.0, W/ BARB WIRE ATTMT	LF	25		$0.00
0550 10232	FENCING, TYPE B, 6.1-7.0, W/ VINYL COATING	LF	25		$0.00
0550 10238	FENCING, TYPE B, 6.1-7.0, RESET EXISTING	LF	25		$0.00
0550 10240	FENCING, TYPE B, 7.1-8.0', STANDARD	LF	25		$0.00
0550 10242	FENCING, TYPE B, 7.1-8.0', VINYL COATING	LF	25		$0.00
0550 10248	FENCING, TYPE B, 7.1-8.0, RESET EXISTING	LF	25		$0.00
0550 10250	FENCING, TYPE B, 8.1-10.0', STANDARD FEATURES	LF	25		$0.00
0550 10251	FENCING, TYPE B, 8.1-10.0', WITH BARBED WIRE ATTMT	LF	25		$0.00

0550 10252	FENCING, TYPE B, 8.1-10.0', VINYL COATING	LF	25		$0.00
0550 10256	FENCING, TYPE B, 8-10.0', WITH VINYL COATING AND BARBED WIRE ATTACHMENT	LF	25		$0.00
0550 10258	FENCING, TYPE B, 8.1-10.0', RESET EXISTING FENCE	LF	25		$0.00
0550 10259	FENCING, TYPE B, 8.1-10.0', SPECIAL	LF	25		$0.00
0550 10266	FENCING, TYPE B, 10.1-12.0', WITH VINYL COATING AND BARBED WIRE ATTACHMENT	LF	25		$0.00
0550 10315	FENCING, TYPE R, 0-5.0', VERTICAL	LF	25		$0.00
0550 10325	FENCING, TYPE R, 5.1-6.0', VERTICAL	LF	25		$0.00
0550 10335	FENCING, TYPE R, 6.1-7.0', VERTICAL	LF	25		$0.00
0550 10343	FENCING, TYPE R, 7.1-8.0, W/FULL ENCLOSURE	LF	25		$0.00
0550 10344	FENCING, TYPE R, 7.1-8.0, W / PARTIAL ENCLOSURE	LF	25		$0.00
0550 10353	FENCING, TYPE R, 8.1 - 10.0', WITH FULL ENCLOSURE	LF	25		$0.00
0550 10354	FENCING, TYPE R, 8.1-10.0', WITH PARTIAL ENCLOSURE, TYPE R ONLY	LF	25		$0.00
0550 10355	FENCING, TYPE R, 8.1-10.0', VERTICAL	LF	25		$0.00
0550 10363	FENCING, TYPE R, GREATER THAN 10.0', WITH FULL ENCLOSURE	LF	25		$0.00
0570 1 2	PERFORMANCE TURF, SOD	SY	1500		$0.00
0571 1 11	PLASTIC EROSION MAT, TURF REINFORCED MAT, TYPE 1	SY	100		$0.00
0571 1 12	PLASTIC EROSION MAT, TRM, TYPE 2	SY	100		$0.00
0571 1 13	PLASTIC EROSION MAT, TURF REINFORCED MAT, TYPE 3	SY	100		$0.00
0591 1 2	4" LANDSCAPE SLEEVE (UNDERGROUND)	LF	50		$0.00
0591 1 2A	4" LANDSCAPE SLEEVE (BORED)	LF	50		$0.00
0630 2 11	CONDUIT, FURNISH & INSTALL, OPEN TRENCH	LF	1000		$0.00
0630 2 12	CONDUIT, FURNISH & INSTALL, DIRECTIONAL BORE	LF	1000		$0.00
0630 2 14	CONDUIT, FURNISH & INSTALL, ABOVEGROUND	LF	1000		$0.00
0630 2 15	CONDUIT, FURNISH & INSTALL, BRIDGE MOUNT	LF	100		$0.00
0630 2 65	CONDUIT, REMOVE, BRIDGE MOUNT	LF	100		$0.00
0654 001	RECTANGULAR RAPID FLASHING BEACON ASSEMBLY	EA	2		$0.00
0660 2101	LOOP ASSEMBLY- F&I, TYPE A	AS	20		$0.00
0660 2102	LOOP ASSEMBLY, F&I, TYPE B	AS	20		$0.00
0660 2103	LOOP ASSEMBLY, F&I, TYPE C	AS	20		$0.00

0660 2104	LOOP ASSEMBLY, F&I, TYPE D	AS	20		$0.00
0660 2105	LOOP ASSEMBLY, F&I, TYPE E	AS	20		$0.00
0660 2106	LOOP ASSEMBLY, F&I, TYPE F	AS	20		$0.00
0660 2107	LOOP ASSEMBLY, F&I, TYPE G	AS	20		$0.00
0660 3 11	VEHICLE DETECTION SYSTEM- MICROWAVE, FURNISH & INSTALL CABINET EQUIPMENT	EA	5		$0.00
0660 3 12	VEHICLE DETECTION SYSTEM- MICROWAVE, FURNISH & INSTALL, ABOVE GROUND EQUIPMENT	EA	5		$0.00
0700 1 11	SINGLE POST SIGN, F&I GROUND MOUNT, UP TO 12 SF	AS	50		$0.00
0700 1 12	SINGLE POST SIGN, F&I GROUND MOUNT, 12-20 SF	AS	20		$0.00
0700 1 13	SINGLE POST SIGN, F&I GROUND MOUNT, 21-30 SF	AS	5		$0.00
0700 1 14	SINGLE POST SIGN, F&I GROUND MOUNT, 31+ SF	AS	5		$0.00
0700 1 18	SINGLE POST SIGN, F&I GROUND MOUNT, IN-STREET FLEXIBLE POST	AS	5		$0.00
0700 1 21	SINGLE POST SIGN, F&I BARRIER MOUNT INDEX 11871 UP TO 12 SF	AS	5		$0.00
0700 1 22	SINGLE POST SIGN, F&I BARRIER MOUNT INDEX 11871 12-20 SF	AS	5		$0.00
0700 1 23	SINGLE POST SIGN, F&I BARRIER MOUNT INDEX 11871, 21-30 SF SHEETING AREA- BACK TO BACK	AS	5		$0.00
0700 1 31	SINGLE POST SIGN, F&I BRIDGE MOUNT INDEX 11870, UP TO 12 SF	AS	5		$0.00
0700 1 32	SINGLE POST SIGN, F&I BRIDGE MOUNT INDEX 11870, 12-20 SF	AS	5		$0.00
0700 1 33	SINGLE POST SIGN, F&I BRIDGE MOUNT INDEX 11870, 21-30 SF	AS	5		$0.00
0700 1 40	SINGLE POST SIGN, INSTALL	AS	5		$0.00
0700 1 50	SINGLE POST SIGN, RELOCATE	AS	10		$0.00
0700 1 60	SINGLE POST SIGN, REMOVE	AS	50		$0.00
0700 1 74	SINGLE POST SIGN, F&I CUSTOM, 31+ SF	AS	5		$0.00
0700 2 11	MULTI- POST SIGN, F&I GROUND MOUNT, UP TO 12 SF	AS	5		$0.00
0700 2 12	MULTI- POST SIGN, F&I GROUND MOUNT, 12-20 SF	AS	5		$0.00
0700 2 13	MULTI- POST SIGN, F&I GROUND MOUNT, 21-30 SF	AS	5		$0.00
0700 2 14	MULTI- POST SIGN, F&I GROUND MOUNT, 31-50 SF	AS	5		$0.00
0700 2 15	MULTI- POST SIGN, F&I GROUND MOUNT, 51-100 SF	AS	5		$0.00
0700 2 16	MULTI- POST SIGN, F&I GROUND MOUNT, 101-200 SF	AS	5		$0.00
0700 2 40	MULTI- POST SIGN, INSTALL	AS	5		$0.00
0700 2 50	MULTI- POST SIGN, F&I GROUND MOUNT, RELOCATE	AS	5		$0.00

0700 2 60	MULTI- POST SIGN, F&I GROUND MOUNT, REMOVE	AS	5		$0.00
0700 2 80	MULTI- POST SIGN, F&I GROUND MOUNT, REPAIR	AS	5		$0.00
0700 3101	SIGN PANEL, FURNISH & INSTALL GROUND MOUNT, UP TO 12 SF	EA	5		$0.00
0700 3102	SIGN PANEL, FURNISH & INSTALL GROUND MOUNT, 12-20 SF	EA	5		$0.00
0700 3103	SIGN PANEL, FURNISH & INSTALL GROUND MOUNT, 21-30 SF	EA	5		$0.00
0700 3104	SIGN PANEL, FURNISH & INSTALL GROUND MOUNT, 31-50 SF	EA	5		$0.00
0700 3105	SIGN PANEL, FURNISH & INSTALL GROUND MOUNT, 51-100 SF	EA	5		$0.00
0700 3106	SIGN PANEL, FURNISH & INSTALL GROUND MOUNT, 101-200 SF	EA	5		$0.00
0700 3201	SIGN PANEL, FURNISH & INSTALL OVERHEAD MOUNT, UP TO 12 SF	EA	5		$0.00
0700 3202	SIGN PANEL, FURNISH & INSTALL OVERHEAD MOUNT, 12-20 SF	EA	5		$0.00
0700 3203	SIGN PANEL, FURNISH & INSTALL OVERHEAD MOUNT, 21-30 SF	EA	5		$0.00
0700 3204	SIGN PANEL, FURNISH & INSTALL OVERHEAD MOUNT, 31-50 SF	EA	5		$0.00
0700 3205	SIGN PANEL, FURNISH & INSTALL OVERHEAD MOUNT, 51-100 SF	EA	5		$0.00
0700 3206	SIGN PANEL, FURNISH & INSTALL OVERHEAD MOUNT, 101-200 SF	EA	5		$0.00
0700 3401	SIGN PANEL, INSTALL, UP TO 12 SF	EA	5		$0.00
0700 3402	SIGN PANEL, INSTALL, 12-20 SF	EA	5		$0.00
0700 3403	SIGN PANEL, INSTALL, 21-30 SF,	EA	5		$0.00
0700 3404	SIGN PANEL, INSTALL, 31-50 SF	EA	5		$0.00
0700 3405	SIGN PANEL, INSTALL, 51-100 SF,	EA	5		$0.00
0700 3406	SIGN PANEL, INSTALL, 101-200 SF	EA	5		$0.00
0700 3501	SIGN PANEL, RELOCATE, UP TO 12 SF	EA	5		$0.00
0700 3502	SIGN PANEL, RELOCATE, 12-20 SF	EA	5		$0.00
0700 3503	SIGN PANEL, RELOCATE, 21-30 SF	EA	5		$0.00
0700 3504	SIGN PANEL, RELOCATE, 31-50 SF	EA	5		$0.00
0700 3505	SIGN PANEL, RELOCATE, 51-100 SF	EA	5		$0.00
0700 3506	SIGN PANEL, RELOCATE, 101-200 SF	EA	5		$0.00
0700 3601	SIGN PANEL, REMOVE, UP TO 12 SF	EA	5		$0.00
0700 3602	SIGN PANEL, REMOVE, 12-20 SF	EA	5		$0.00
0700 3603	SIGN PANEL, REMOVE, 21-30 SF	EA	5		$0.00

0700 3604	SIGN PANEL, REMOVE, 31-50 SF	EA	5		$0.00
0700 3605	SIGN PANEL, REMOVE, 51-100 SF	EA	5		$0.00
0700 3606	SIGN PANEL, REMOVE, 101-200 SF	EA	5		$0.00
0700 3624	SIGN PANEL, REMOVE, UP TO 50 SF WITH LIGHTING	EA	5		$0.00
0700 3625	SIGN PANEL, REMOVE, 51-100 SF WITH LIGHTING	EA	5		$0.00
0700 3626	SIGN PANEL, REMOVE, 101-200 SF WITH LIGHTING	EA	5		$0.00
0700 12 11	SIGN BEACON, F&I GROUND MOUNT- AC POWERED, ONE BEACON	AS	5		$0.00
0700 12 12	SIGN BEACON, F&I GROUND MOUNT- AC POWERED, TWO BEACONS	AS	5		$0.00
0700 12 21	SIGN BEACON, F&I GROUND MOUNT- SOLAR POWERED, ONE BEACON	AS	5		$0.00
0700 12 22	SIGN BEACON, F&I GROUND MOUNT- SOLAR POWERED, TWO BEACONS	AS	5		$0.00
0700 12 31	SIGN BEACON, F&I OVERHEAD MOUNT, ONE BEACON	AS	5		$0.00
0700 12 32	SIGN BEACON, F&I OVERHEAD MOUNT, TWO BEACONS	AS	5		$0.00
0700 12 50	SIGN BEACON, RELOCATE BEACON- SIGN TO REMAIN	AS	5		$0.00
0700 12 60	SIGN BEACON, REMOVE BEACON- SIGN TO REMAIN	AS	5		$0.00
0700 13 10	RETROREFLECTIVE SIGN STRIP- BACK OF RAIL ROAD CROSSBUCK SIGN BLADES	EA	5		$0.00
0700 13 12	RETROREFLECTIVE SIGN STRIP- FURNISH AND INSTALL, 2'	EA	5		$0.00
0700 13 15	RETROREFLECTIVE SIGN STRIP- FURNISH AND INSTALL, 5'	EA	5		$0.00
0701 17101	PROFILED THERMOPLASTIC,STANDARD- CONCRETE SURFACES, WHITE, SOLID,6"	GM	1		$0.00
0701 17201	PROFILED THERMOPLASTIC,STANDARD- CONCRETE SURFACES, YELLOW, SOLID,6"	GM	1		$0.00
0701 17221	PROFILED THERMOPLASTIC,STANDARD- CONCRETE SURFACES, YELLOW, SKIP,6"	GM	1		$0.00
0701 18101	PROFILED THERMOPLASTIC,STANDARD- ASPHALT SURFACES, WHITE, SOLID,6"	GM	1		$0.00
0701 18201	PROFILED THERMOPLASTIC,STANDARD- ASPHALT SURFACES, YELLOW, SOLID,6"	GM	1		$0.00
0701 18221	PROFILED THERMOPLASTIC,STANDARD- ASPHALT SURFACES, YELLOW, SKIP,6"	GM	1		$0.00
0705 10 1	OBJECT MARKER, TYPE 1	EA	5		$0.00
0705 10 2	OBJECT MARKER, TYPE 2	EA	5		$0.00
0705 10 3	OBJECT MARKER, TYPE 3	EA	5		$0.00
0705 10 4	OBJECT MARKER, TYPE 4	EA	5		$0.00
0705 11 1	DELINEATOR, FLEXIBLE TUBULAR	EA	50		$0.00
0705 11 2	DELINEATOR, NON-FLEXIBLE	EA	5		$0.00

0705 11 3	DELINEATOR, FLEXIBLE HIGH VISABILITY MEDIAN	EA	5		$0.00
0705 11 4	DELINEATOR, FLEXIBLE HIGH PERFORMANCE	EA	5		$0.00
0706 1 3	RAISED PAVEMENT MARKER, TYPE B	EA	200		$0.00
0710 90	PAINTED PAVEMENT MARKINGS, FINAL SURFACE	LS	5		$0.00
0710 11101	PAINTED PAVEMENT MARKINGS, STANDARD, WHITE, SOLID, 6"	GM	1		$0.00
0710 11102	PAINTED PAVEMENT MARKINGS, STANDARD, WHITE, SOLID FOR INTERCHANGE AND URBAN ISLAND, 8"	GM	1		$0.00
0710 11103	PAINTED PAVEMENT MARKINGS, STANDARD, WHITE, SOLID FOR INTERCHANGE MARKINGS, 12"	GM	1		$0.00
0710 11123	PAINTED PAVEMENT MARKINGS, STANDARD, WHITE, SOLID, 12"	LF	3000		$0.00
0710 11124	PAINTED PAVEMENT MARKINGS, STANDARD, WHITE, SOLID, 18"	LF	2000		$0.00
0710 11125	PAINTED PAVEMENT MARKINGS, STANDARD, WHITE, SOLID, 24"	LF	2000		$0.00
0710 11131	PAINTED PAVEMENT MARKINGS, STANDARD, WHITE, SKIP, 10-30 OR 3-9 SKIP, 6" WIDE	GM	1		$0.00
0710 11133	PAINTED PAVEMENT MARKING, STANDARD,WHITE, 3'-9' SKIP DROP LINE AND APPROACH TO TOLL PLAZA, 12" WIDE,	GM	1		$0.00
0710 11141	PAINTED PAVEMENT MARKINGS, STANDARD, WHITE, 2-4 DOTTED GUIDELINE/ 6-10 DOTTED EXTENSION, 6"	GM	1		$0.00
0710 11160	PAINTED PAVEMENT MARKINGS, STANDARD, WHITE, MESSAGE	EA	25		$0.00
0710 11170	PAINTED PAVEMENT MARKINGS, STANDARD, WHITE, ARROWS	EA	25		$0.00
0710 11180	PAINTED PAVEMENT MARKINGS, STANDARD, WHITE, YIELD LINE	LF	500		$0.00
0710 11190	PAINTED PAVEMENT MARKINGS, STANDARD, WHITE, ISLAND NOSE	SF	100		$0.00
0710 11201	PAINTED PAVEMENT MARKINGS, STANDARD, YELLOW, SOLID, 6"	GM	1		$0.00
0710 11202	PAINTED PAVEMENT MARKINGS, STANDARD, YELLOW, SOLID FOR INTERCHANGE AND URBAN ISLAND, 8"	GM	1		$0.00
0710 11203	PAINTED PAVEMENT MARKINGS, STANDARD, YELLOW, SOLID, 12"	GM	1		$0.00
0710 11223	PAINTED PAVEMENT MARKINGS, STANDARD, YELLOW, SOLID, 12"	LF	100		$0.00
0710 11224	PAINTED PAVEMENT MARKINGS, STANDARD, YELLOW, SOLID, 18"	LF	300		$0.00
0710 11225	PAINTED PAVEMENT MARKINGS, STANDARD, YELLOW, SOLID, 24"	LF	100		$0.00
0710 11231	PAINTED PAVEMENT MARKINGS, STANDARD, YELLOW, SKIP, 6"	GM	1		$0.00
0710 11241	PAINTED PAVEMENT MARKINGS, STANDARD, YELLOW, 2-4 DOTTED GUIDELINE/6-10 DOTTED EXTENSION, 6"	GM	1		$0.00
0710 11290	PAINTED PAVEMENT MARKINGS, STANDARD, YELLOW, ISLAND NOSE	SF	100		$0.00
0710 11331	PAINTED PAVEMENT MARKINGS, STANDARD,BLACK, SKIP, 6"	GM	1		$0.00
0710 11333	PAINTED PAVEMENT MARKING, STANDARD, BLACK, 3'-9' DOTTED LANE DROP AND APPROACH TO TOLL PLAZA, 12"	GM	1		$0.00
0710 11341	PAINTED PAVEMENT MARKINGS, STANDARD, BLACK, 2-4 DOTTED GUIDELINE/ 6-10 DOTTED EXTENSION, 6"	GM	1		$0.00

0710 11421	PAINTED PAVEMENT MARKINGS, STANDARD, BLUE, SOLID FOR PARKING LOT- ACCESSIBLE MARKINGS, 6"	LF	100		$0.00
0710 12231	PAINTED PAVEMENT MARKINGS, DURABLE, YELLOW, SKIP, 6"	GM	1		$0.00
0710 12421	PAINTED PAVEMENT MARKINGS, DURABLE, BLUE, SOLID FOR PARKING LOT-ACCESSIBLE MARKINGS, 6"	LF	100		$0.00
0711 11102	THERMOPLASTIC, STANDARD, WHITE, SOLID, 8" FOR INTERCHANGE AND URBAN ISLAND	GM	1		$0.00
0711 11103	THERMOPLASTIC, STANDARD, WHITE, SOLID, 12" FOR INTERCHANGE MARKINGS	GM	1		$0.00
0711 11123	THERMOPLASTIC, STANDARD, WHITE, SOLID, 12" FOR CROSSWALK AND ROUNDABOUT	LF	2500		$0.00
0711 11124	THERMOPLASTIC, STANDARD, WHITE, SOLID, 18" FOR DIAGONALS AND CHEVRONS	LF	500		$0.00
0711 11125	THERMOPLASTIC, STANDARD, WHITE, SOLID, 24" FOR STOP LINE AND CROSSWALK	LF	1500		$0.00
0711 11130	THERMOPLASTIC, STANDARD, WHITE, VERTICAL DEFLECTION MARKING	EA	10		$0.00
0711 11140	THERMOPLASTIC, STANDARD, WHITE, VERTICAL DEFLECTION ADVANCED WARNING MARKING	EA	10		$0.00
0711 11141	THERMOPLASTIC, STANDARD, WHITE, 2-4 DOTTED GUIDELINE/ 6-10 GAP EXTENSION, 6"	GM	1		$0.00
0711 11143	THERMOPLASTIC, STANDARD, WHITE, 2-4 DOTTED GUIDELINE, 12" FOR ROUNDABOUT	GM	1		$0.00
0711 11160	THERMOPLASTIC, STANDARD, WHITE, MESSAGE OR SYMBOL	EA	20		$0.00
0711 11170	THERMOPLASTIC, STANDARD, WHITE, ARROW	EA	20		$0.00
0711 11180	THERMOPLASTIC, STANDARD, WHITE, YIELD LINE	LF	250		$0.00
0711 11224	THERMOPLASTIC, STANDARD, YELLOW, SOLID, 18" FOR DIAGONAL OR CHEVRON	LF	250		$0.00
0711 11241	THERMOPLASTIC, STANDARD, YELLOW, 2-4 DOTTED GUIDE LINE /6-10 DOTTED EXTENSION LINE, 6"	GM	1		$0.00
0711 11421	THERMOPLASTIC, STANDARD, BLUE, SOLID,6"	LF	100		$0.00
0711 14123	THERMOPLASTIC, PREFORMED, WHITE, SOLID, 12"	LF	1000		$0.00
0711 14125	THERMOPLASTIC, PREFORMED, WHITE, SOLID, 24"	LF	1000		$0.00
0711 14141	THERMOPLASTIC, PREFORMED, WHITE, 2-4 DOTTED GUIDELINE ON CONCRETE SURFACES	GM	1		$0.00
0711 14160	THERMOPLASTIC, PREFORMED, WHITE, MESSAGE	EA	5		$0.00
0711 14170	THERMOPLASTIC, PREFORMED, WHITE, ARROWS	EA	20		$0.00
0711 14191	THERMOPLASTIC, PREFORMED, 6" WHITE, RAILROAD DYNAMIC ENVELOPE	LF	100		$0.00
0711 14193	THERMOPLASTIC, PREFORMED, 12" WHITE ON ASPHALT PAVEMENT, RAILROAD DYNAMIC ENVELOPE	LF	250		$0.00
0711 14194	THERMOPLASTIC, PREFORMED, 12" WHITE WITH 4" OUTSIDE BLACK CONTRAST ON CONCRETE PAVEMENT, RAILROAD DYNAMIC ENVELOPE	LF	100		$0.00
0711 14341	THERMOPLASTIC, PREFORMED, BLACK, 2-4 DOTTED GUIDELINE ON CONCRETE SURFACES	GM	1		$0.00
0711 14560	THERMOPLASTIC, PREFORMED, WHITE WITH BLACK CONTRAST ON CONCRETE PAVEMENT, MESSAGE OR SYMBOL	EA	5		$0.00
0711 14570	THERMOPLASTIC, PREFORMED, WHITE WITH BLACK CONTRAST, ARROW ON CONCRETE SURFACE	EA	5		$0.00

0711 15101	THERMOPLASTIC, STANDARD-OPEN GRADED ASPHALT SURFACES WHITE, SOLID, 6"	GM	1		$0.00
0711 15102	THERMOPLASTIC, STANDARD-OPEN GRADED ASPHALT SURFACES, WHITE, SOLID, 8"	GM	1		$0.00
0711 15131	THERMOPLASTIC, STANDARD-OPEN GRADED ASPHALT SURFACES, WHITE, SKIP, 6",10-30 SKIP OR 3-9 LANE DROP	GM	1		$0.00
0711 15133	THERMOPLASTIC, STANDARD-OPEN GRADED ASPHALT SURFACES, WHITE, SKIP, 12"- APPROACH TO TOLL PLAZA OR 3-9 LANE DROP	GM	1		$0.00
0711 15201	THERMOPLASTIC, STANDARD-OPEN GRADED ASPHALT SURFACES, YELLOW, SOLID, 6"	GM	1		$0.00
0711 15202	THERMOPLASTIC, STANDARD-OPEN GRADED ASPHALT SURFACES YELLOW, SOLID, 8"	GM	1		$0.00
0711 15231	THERMOPLASTIC, STANDARD-OPEN GRADED ASPHALT SURFACES, YELLOW, SKIP, 6"	GM	1		$0.00
0711 16101	THERMOPLASTIC, STANDARD-OTHER SURFACES, WHITE, SOLID, 6"	GM	3		$0.00
0711 16102	THERMOPLASTIC, STANDARD-OTHER SURFACES, WHITE, SOLID, 8"	GM	1		$0.00
0711 16131	THERMOPLASTIC, OTHER SURFACES, WHITE, SKIP, 6",10-30 SKIP OR 3-9 LANE DROP	GM	1		$0.00
0711 16133	THERMOPLASTIC, STANDARD-OTHER SURFACES WHITE, SKIP, 12"- APPROACH TO TOLL PLAZA OR 3-9 LANE DROP	GM	1		$0.00
0711 16201	THERMOPLASTIC, STANDARD-OTHER SURFACES, YELLOW, SOLID, 6"	GM	3		$0.00
0711 16202	THERMOPLASTIC, STANDARD-OTHER SURFACES, YELLOW, SOLID, 8"	GM	1		$0.00
0711 16231	THERMOPLASTIC, STANDARD-OTHER SURFACES, YELLOW, SKIP, 6"	GM	1		$0.00
0711 17	THERMOPLASTIC, REMOVE EXISTING THERMOPLASTIC PAVEMENT MARKINGS: NON-CONFLICTING ONLY	SF	500		$0.00
0711 12131	THERMOPLASTIC, REFURBISHMENT, WHITE, SKIP, 6"	GM	1		$0.00
0711 12160	THERMOPLASTIC, REFURBISH, WHITE, MESSAGE	EA	5		$0.00
0711 12170	THERMOPLASTIC, REFURBISH, WHITE, ARROWS	EA	5		$0.00
0711 12231	THERMOPLASTIC, REFURBISHMENT, YELLOW, SKIP, 6"	GM	1		$0.00
713103101	PERMANENT TAPE, WHITE, SOLID, 6" FOR CONCRETE BRIDGES	GM	1		$0.00
713103102	PERMANENT TAPE, WHITE, SOLID, 8" EXIT LANE AT INTERCHANGE ON CONCRETE PAVEMENT	GM	1		$0.00
713103103	PERMANENT TAPE, WHITE, SOLID DROP LANE MARKING, 12" FOR CONCRETE BRIDGES,	GM	1		$0.00
713103131	PERMANENT TAPE, WHITE, SKIP/DOTTED, 6" FOR CONCRETE SURFACES	GM	1		$0.00
713103133	PERMANENT TAPE, WHITE, SKIP, 12" WIDE 3'-9' DROP LANE ON CONCRETE SURFACES	GM	1		$0.00
713103201	PERMANENT TAPE, YELLOW, SOLID, 6" FOR CONCRETE BRIDGES	GM	1		$0.00
713103231	PERMANENT TAPE, YELLOW, 10-30 SKIP/ 3-9 DOTTED, 6" FOR CONCRETE SURFACES	GM	1		$0.00
713103331	PERMANENT TAPE, BLACK, SKIP/DOTTED, 6" FOR CONCRETE SURFACES	GM	1		$0.00
713103333	PERMANENT TAPE, BLACK, 3'-9' DROP LANE, 12" ON CONCRETE SURFACES	GM	1		$0.00
713107	PREFORMED/PERMANENT TAPE, REMOVE	SF	50		$0.00

400143	CLEANING & COATING CONCRETE SURFACE, CLASS 5	SF	5		$0.00
906-173-7	SINGLE COMPONENT POLYURETHANE INJECTION	GAL	500		$0.00
906-173-8	TWO COMPONENT POLYURETHANE INJECTION	LB	10000		$0.00
MISCELLANEOUS LABOR, EQUIPMENT, MATERIAL, AND SUB-CONTRACTOR ITEMS					
	LABOR - FOREMAN	HR	1		$0.00
	LABOR - OPERATOR	HR	1		$0.00
	LABOR - TRUCK DRIVER	HR	1		$0.00
	LABOR - PIPE LAYERS (FOR PIPES < 48" DIA.)	HR	1		$0.00
	LABOR - LABORER	HR	1		$0.00
	EQUIPMENT - FOREMAN P/U WITH HAND TOOLS	HR	1		$0.00
	EQUIPMENT - JOB TRUCK WITH MANDATORY TOOLS*	HR	1		$0.00
	EQUIPMENT - CRANE (20 TON)	HR	1		$0.00
	EQUIPMENT - CRANE (60 TON)	HR	1		$0.00
	EQUIPMENT - TRACTOR & TRAILER (TRANSPORT)	HR	1		$0.00
	EQUIPMENT - TRACK HOE (TO 100 HP)	HR	1		$0.00
	EQUIPMENT - TRACK HOE (101 HP TO 170 HP)	HR	1		$0.00
	EQUIPMENT - RUBBER TIRED BACKHOE	HR	1		$0.00
	EQUIPMENT - WHEEL LOADER (TO 150 HP)	HR	1		$0.00
	EQUIPMENT - WHEEL LOADER (151 HP AND UP)	HR	1		$0.00
	EQUIPMENT - TRACK TYPE TRACTORS (TO 100 HP)	HR	1		$0.00
	EQUIPMENT - TRACK TYPE TRACTORS (101 HP AND UP)	HR	1		$0.00
	EQUIPMENT - DUMP TRUCK (TANDEM AXLE)	HR	1		$0.00
	EQUIPMENT - PLATE TAMP	HR	1		$0.00
	EQUIPMENT - 3" TRASH PUMP	HR	1		$0.00
	EQUIPMENT - 4" DOUBLE DIAPHRAGM PUMP	HR	1		$0.00
	EQUIPMENT - AIR COMPRESSOR (125 SCFM)	HR	1		$0.00
	EQUIPMENT - WELL POINT PUMP	HR	1		$0.00
	EQUIPMENT - 4" JET PUMP	HR	1		$0.00
	MATERIAL - 2500 PSI CONCRETE (UN-FORMED)	CY	1		$0.00
	MATERIAL - OFF SITE SELECT FILL	CY	1		$0.00
	MATERIAL - LIMEROCK BASE MATERIAL	TN	1		$0.00
	MATERIAL - #57 WASHED STONE	TN	1		$0.00
	MATERIAL - ASPHALT PAVING (1.5" THICK; TYPE S-3)	SY	1		$0.00
	MATERIAL - BAHIA SOD	SY	1		$0.00
	SUB-CONTRACTOR - WELDER WITH TRUCK	HR	1		$0.00
	SUB-CONTRACTOR - TRACTOR WITH 7' BUSH HOG	HR	1		$0.00

* Contractor Job Truck Mandatory Tools

	Tool	Minimum size	Quantity
1	Air compressor	20 CFM @ 90PSI	1
2	3/4" drive ratchet and socket set		1
3	1 inch drive air impact wrench		1
4	1 inch drive sockets	1-1/2" to 3"	1 each
5	Slug wrenches	1-1/2" to 3"	1
6	End wrenches	7/16" to 1-1/2"	2 each
7	Porta band saw w spare blades	4" opening	1
8	Sawzall w spare blades		1
9	Nylon slings 5,000 and 10,000 pound rated (vertical)	2" 2 ply/4" 2 ply	2 each
10	Grade 80 Chain 10,000 pound rated	1/2" X 10 ft	2
11	Clevis or Shackles 5 ton rated	5/8" alloy	4
12	Porta power 10 ton		1
13	Shovels- round and square point		3 each
14	Cutting torch set *see note*		1
15	Gas or diesel stick welder and accessories *see note*		1
16	Small diaphragm pump and accessories	2" suction	1
17	Tap and die set	1/2" to 2" NPT	1
18	Drill and bits for steel or ductile	1/2" to 2" NPT size	1 set
19	Pry bar	5 foot	1
20	Come along	2ton	2
21	Circular Saw and blades for cribbing/forms	7 1/2 inch	2
22	Generator 120/240 volt	3500 watt	1
23	Framing hammer and nails for forms		2
24	Screw gun and screws for forms and cribbing		1
25	Gas powered cutoff saw (K-12)	12inch	1
26	Chain saw for cribbing and for'ms	14 inch bar	1
27	Sledge hammers	4t/ and 6tl	1 each
28	Crew PPE to include Hard hat and gloves at minimum	as needed	per person

155 Corey Avenue
St. Pete Beach, FL 33706-1839
www.stpetebeach.org

ADDENDUM 1

Civil On Call Construction Services

Issued 3/23/2026

*Sealed bids must be received by **9:00 AM on 04/08/2026** electronically via Bonfire. Bids received after the deadline will not be accepted. They will be publicly opened and read at **11:00 AM on 04/08/2026**. All bidders are invited to attend this bid Opening.*

Addendum 1 includes:

Pre-bid Minutes
Questions and Answers

Optional - Pre-Bid Meeting Minutes
RFP: Civil On Call Construction Services
March 18, 2026
10:00 AM

Staff Members Present:
Sara Spain, Procurement Manager
John Taylor, Assistant Finance Director
Camden Mills, Public Services Director
Dejan Milosevic, Project Manager
Michael Weaver, Infrastructure Operations Manager
Brian Gelock, Public Services
Kenneth Kosbab, Public Services
Ariana Wilson-Romo, Exec. Assistant City Clerk's Office

Others Present:

Name	***Company***	***Contact***
Abbey Boyle	PCS Civil	abbeyb@pcscivilinc.com
Bruno Sequeira	BCS Construction Group	Did not provide.
George Pappas	Southern Road & Bridge LLC	gpappas@southernrb.com
Tristan Hine	PCS Civil	tristanh@pcscivilinc.com
Dave Reid	Ajax Paving Industries of FL LLC	flestimate@ajaxpaving.com
Zachariah Wachalec	David Nelson Construction Co.	zwachalec@nelson-consturction.com

The meeting was called to order at 10:02 AM.

All attendees were present via Teams.

Ms. Spain briefly reviewed important dates and times which are as follows:
- Receipt of questions due 3/25 at 10AM
- Bids due 4/8 by 9AM
- Bid opening 4/8 at 11AM

She requested that any questions be submitted in writing to purchasing@stpetebeach.org. Questions will be answered via an addendum that will be posted to the City website and Bonfire.

Public Services Director Camden Mills stated that the City is seeking as-needed construction services for various capital projects and/or maintenance projects. Ms. Spain clarified that the City does anticipate awarding multiple vendors.

The following questions were asked:
Q: Contract terms? A: 3yr with options for two one-year renewals.
Q: Size project monetary-wise? A: The scope touches on what the dollar amounts would be. This contract would be used for anything under $4M. An addendum with anticipated projects can be posted.

There were questions regarding how contractors are selected if unit line items were being submitted in advance. Mr. Mills and Ms. Spain will clarify the contract language via an addendum. Ms. Spain added that in the general contract terms, it states that submissions will be evaluated on capability, cost, and capacity to perform the specific line items requested.
There being no additional questions, the meeting was adjourned at 10:16 AM.

Questions and Answers:

1. **Are there any plans available for the potential work needed? Or would you like us to provide the price for each line item on the bid form? – Plans are not yet available for the potential work needed. Please provide the unit price for each line item on the bid form that you're capable of performing or subcontracting.**
2. **On the bid form for the On-Call Civil Construction Services list, pay items 285701 through 285715, Optional Base Group 1 through Optional Base Group 15, are listed, but it does not specify which base option will be required. What base options are needed for each base group? – Base Groups 1-11: Graded aggregate based or crushed concrete, consisting of granitic material (minimum LBR 100). Base groups 12-15: Type B-12.5.**
3. **Prebid question: Contract Terms? 3 year with options for 2 one-year renewals.**
4. **Prebid question: Size project monetary-wise? The scope touches on what the dollar amounts would be. This contract would be used for anything under $4M.**
5. **Prebid question: List of anticipated projects. See list below of anticipated projects. This list is not all inclusive of potential projects, other projects may be assigned as needed.**
    - **Citywide stormwater collection system repairs and replacements (estimated > $1,000,000)**
    - **Citywide traffic signage replacements (estimated <$250,000)**
    - **Citywide pavement markings (estimated <$250,000)**
    - **Public Services operations yard expansion (estimated >$250,000 and <$500,000)**
    - **Coquina Way cul-de-sac improvements (<$250,000)**
    - **Fisherman's park hurricane damage rehabilitation (estimated >$250,000 and <$500,000)**
    - **Sunset park hurricane damage rehabilitation (estimated >$250,000 and <$500,000)**
    - **Gulf Way roadway rehabilitation (estimated > $2,000,000)**
    - **Belle Vista mini park improvements (estimated <$250,000)**
    - **1st Ave fishing pier hurricane damage repair (estimated <$250,000)**
    - **7th Ave fishing dock hurricane damage repair (estimated <$250,000)**
6. **Prebid question: There were questions regarding how contractors are selected if unit line items were being submitted in advance. Ms. Spain added that in the general contract terms, it states that submissions will be evaluated on capability, cost, and capacity to perform the specific line items requested. – Refer to II. Statement of Work, Part I: General Requirements, G. Work Assignments.**
7. **Will we split up projects (e.g. Seawalls and Parks)? – Multiple vendors may be selected per project depending on scope of work and vendors capabilities. Vendors are encouraged to submit unit prices for line items that they can perform or subcontract.**

155 Corey Avenue
St. Pete Beach, FL 33706-1839
www.stpetebeach.org

ADDENDUM 2

Civil On Call Construction Services

Issued 3/27/2026

*Sealed bids must be received by **9:00 AM on 04/08/2026** electronically via Bonfire. Bids received after the deadline will not be accepted. They will be publicly opened and read at **11:00 AM on 04/08/2026**. All bidders are invited to attend this bid Opening.*

Addendum 1 includes:

Questions and Answers

Questions and Answers:

1. **What class should the Round and Other-Elip/Arch pipe culvert be, class 3 or 4?** **The Round and Other-Elip/Arch pipe culvert bid items are listed as optional material pipe culverts and are not intended to specify a particular pipe class (e.g., Class III or Class IV) at the bid stage. The required pipe material and structural class, if applicable, will be determined by the City for each specific task order based on the project design, loading conditions, and applicable Florida Department of Transportation Standard Specifications.**

2. **Do the U-End walls need to be precast or cast in place?** **U-end walls may be precast or cast-in-place, as appropriate for the specific task order. The required type will be identified in the plans or directed by the City/Engineer for each assignment.**

3. **Are any inlets planned to be cast in place?** **Inlets may be precast or cast-in-place depending on site conditions and design requirements. This will be defined on a task order basis.**

4. **Will any of the end walls listed on the bid form have runs of pipe passing through them? If so, how many runs and at what skew?** **Some end walls may include pipe penetrations; however, the number of runs, pipe sizes, and skew angles (if any) will be determined by the design for each individual task order and shown in the applicable plans.**

5. **Please clarify how contract work will be assigned. The Statement of Work, Part I, Section 1, item G (Work Assignments) states that the City will obtain quotes from the Contractors who have a multiple-award contract. The City will already have contract pricing for each Contractor in the multiple-award contract, what is the criteria for these quotes?** **In the general contract terms, it states that submissions will be evaluated on capability, cost, and capacity to perform the specific line items requested.**

6. **Statement of Work, Part I, Section 15 states that Contractors must provide references for 5 work types in item E. If the Contractor does not intend to submit pricing for a work type, must that work type still be included in the project references?** **No, bidders shall provide references for applicable work types.**

7. **Please clarify the Period of Performance in the General Contract Terms. This states base scope target completion of January 2027 while other parts of the RFP specify a three year contract.** **3-year contract with 2 options for 1-year extensions. Ongoing work may be required.**

8. **Will any bonding be required?** **Yes, 5% of total bid amount.**

EXHIBIT "C"

Vendor Bid/Proposal

(Place Vendor's Bid/Proposal Behind this Page)

Cathcart
Construction Company - Florida, LLC

A Safety Company That Builds Infrastructure Projects

1056 Willa Springs Dr, Winter Springs, FL, 32708
11738 Currie Ln, Largo, FL 33774
(407) 629-2900

Transmittal Letter:

Civil On Call Construction Services:

April 8th, 2026

Dear Sara Spain, Procurement Manager:

Cathcart Construction Company – Florida, LLC is pleased to submit the attached response to the bid for the above-referenced contract. We respectfully request your consideration as the City of Saint Pete Beach selects a trusted partner to support their on call construction services, both for new construction and for the maintenance, rehabilitation, and emergency response needs of existing systems. For over 34 years, Cathcart has built a strong reputation for delivering high-quality civil infrastructure solutions in Central Florida, where we are based, and across West Florida with our local office in Largo Florida. It would be a privilege to continue extending our services to your community in this capacity and aiding in the improvement of the city's infrastructure. We approach each partnership with long-term value in mind, ensuring our clients receive not just a contractor but a dedicated extension of their municipal team.

At Cathcart, our culture goes far beyond being customer-focused; we are passionately customer-obsessed. This principle drives our operations, from leadership to field personnel, and shapes the way we approach every project. Our commitment to client satisfaction is not just something we say; it's demonstrated through our track record. We consistently deliver infrastructure improvements on time, within budget, and with an uncompromising commitment to workplace safety. Our extensive capabilities include underground utility work, stormwater systems, lift stations, roadway and hardscape improvements, and rapid-response services. Whether under standard or emergency conditions, Cathcart has the personnel, equipment, and experience necessary to mobilize efficiently and complete any civil infrastructure construction contract the committee needs done with the utmost attention to detail.

We are proud to maintain ongoing contracts with a wide range of municipalities across Central Florida. This includes the cities of Altamonte Springs, Orlando, Winter Park,



Maitland, Sanford, Ocoee, Winter Garden, Oakland, and Wauchula, along with Seminole, Orange, Hillsborough, Osceola, and Hardee counties. These longstanding relationships speak to our responsiveness, technical capability, and the high level of trust we've earned. Our strategic locations in Orlando and Largo, Florida, allow us to respond quickly to the needs of the region, while our organizational structure supports seamless communication, proactive problem-solving, and agile project execution. We are a safety-first company that builds infrastructure, placing the well-being of our team, our partners, and the public at the center of everything we do.

Equally important to safety and performance is our steadfast promise: to deliver exactly what our clients want, when they want it, and for exactly what they expect to pay for it. Our hands-on leadership team works closely with a dedicated workforce to provide expert oversight, manage complex project timelines, and ensure quality at every phase. This integrated approach allows us to consistently exceed expectations and deliver long-term value. For your consideration, we have included references from several of our municipal partners who can speak directly about our professionalism, reliability, and results. We appreciate the opportunity to be considered for this important work and would be honored to support the City of Saint Pete Beach in building and maintaining the infrastructure your community deserves.

Mr. John Cathcart and I are authorized to make representations for Cathcart. For this contract, I will be your point of contact should you or any member of your staff require any additional information; my personal cell phone number is (407) 810-9614. Please do not hesitate to call me for any type of discussion. My e-mail address is mblanton@cathcartconstructioncompany.com.

Sincerely Yours,



Matt T. Blanton
President



VI. CONTRACTOR'S PROPOSAL SUBMITTAL

The company that is submitting a proposal declares that it has extensive experience providing Task Work Order driven Civil On-Call Construction Services.

The undersigned, as Proposer, hereby declares that the only person or persons interested in the Proposal as principal or principals are named herein, and that no person other than herein mentioned has any interest in the Proposal or in the Agreement to be entered into; that this Proposal or Agreement is made without connection with any other person, company, or parties making a Proposal; and that it is in all respects fair and in good faith without collusion or fraud.

The Proposer further declares that they have examined the site of the work and informed themselves fully in regard to all conditions pertaining to the place where the work is to be done; that they have examined the Plans and Specifications for the work and Contract Documents relative thereto, and have read all special provisions furnished prior to the opening of proposals; and that they have satisfied themselves relative to the materials to be supplied and work to be performed.

The Proposer proposes and agrees, if the Proposal is accepted, to contract with the City of St. Pete Beach, Florida, in the form of an Agreement specified for **"Civil On Call Construction Services"** in St. Pete Beach, Florida, in full and complete accordance with the shown, noted, described, and reasonably intended requirements of the Plans, Specifications, and Contract Documents, to the full and entire satisfaction of the City of St. Pete Beach, Florida.

The successful Proposer shall be required to utilize the template Agreement in this Request for Proposals (RFP) and any questions regarding the Agreement must be addressed during the RFP process before submittal. The City reserves the right to respond or not respond to questions in the form of an addendum.

The Proposer proposes to furnish all materials, equipment, labor, and perform the work submitted in their proposal schedule for the City of St. Pete Beach **"Civil On Call Construction Services."**

COMPANY: Cathcart Construction Company - Florida, LLC DATE: 04/07/2026

ADDRESS: 1056 Villa Springs Dr, Winter Springs Florida, 32708 PHONE: 407-629-2900

PROPOSER: Cathcart Construction Company-Florida LLC NAME: Matt Blanton - President

(SIGNATURE) (PRINT NAME & TITLE)

STATE OF FLORIDA
COUNTY OF Seminole

The foregoing instrument was sworn to (or affirmed), subscribed, and acknowledged before me by means of ☑ physical presence or ☐ online notarization, this 7th day of April, 2026, by Matt Blanton - President, who is personally known to me or has produced _____ as identification.

(SEAL)

Notary Public State of Florida
Sean E Cosentino
My Commission HH 771051
Expires 2/24/2030

Notary Public – State of Florida

Sean E Cosentino
(Print, Type, Stamp, or Commissioned Name of Notary Public)

SUBMIT PROPOSAL TO: Electronically via Bonfire only

VII. PUBLIC ENTITY CRIMINAL AFFIDAVIT

SWORN STATEMENT – PUBLIC ENTITY CRIMES

PURSUANT TO § 287.133 (3)(a), FLORIDA STATUTES, ON PUBLIC ENTITY CRIMES
THE FORM MUST BE SIGNED AND SWORN TO IN THE PRESENCE OF A NOTARY PUBLIC OR OTHER OFFICIAL AUTHORIZED TO ADMINISTER OATHS.

1. This sworn statement is submitted to: City of St. Pete Beach
by: Matt Blanton - President
(Print individual's name and title)

for: Cathcart Construction Company - Florida, LLC
(Print name of entity submitting sworn statement)

at: 1056 Willa Springs Dr, Winter Springs Florida, 32708
(Business address)

and (if applicable), its Federal Employer Identification Number (FEIN):

46-4740152
(FEIN)
or, if the entity has no FEIN, include the Social Security Number:

(SSN)

by the individual signing this sworn statement:
(Signature) Matt Blanton - President

2. I understand that a "public entity crime" as defined in § 287.133 (1)(g), Fla. Stat., means a violation of any State or Federal law by a person with respect to and directly related to the transaction of business with any public entity or with an agency or political subdivision of any other state or of the United States including, but not limited to, any proposal or contract for goods or services, any lease for real property, or any contract for the construction or repair of a public building or public work, involving antitrust, fraud, theft, bribery, collusion, racketeering, conspiracy, or material misrepresentation.

3. I understand that "convicted" or "conviction" as defined in § 287.133 (1)(b), Fla. Stat., means a finding of guilt or a conviction of public entity crime with or without an adjudication of guilt in any Federal or State trial court of record relating to charges brought by indictment or information after July 1, 1989, as a result of a jury verdict, non-jury trial, or entry of a plea of guilty or nolo contendere.

4. I understand that an "affiliate" as defined in § 287.133 (1)(a), Fla. Stat., means:
   a. A predecessor or successor of a person convicted of a public entity crime or
   b. An entity under the control of any natural person who is active in the management of the entity and who has been convicted of a public entity crime. The term "affiliate" includes those officers, directors, executives, partners, shareholders, employees, members, and agents who are active in the management of an affiliate. The ownership by one (1) person of shares constituting a controlling interest in another person or a pooling of equipment or income among persons when not for fair market value under the arm's length agreement, shall be a prima facie case that one (1) person controls another person. A person who knowingly enters into a joint venture with a person who has been convicted of a public crime in Florida during the preceding thirty-six (36) months shall be considered an affiliate.

5. I understand that a "person" as defined in Section 287.133 (1)(e), Fla. Stat., means any natural person or any entity organized under the laws of any state or of the United States with the legal power to enter into a binding contract and which proposals or applies to proposal on contracts let by a public entity, or which otherwise transacts or applies to transact business with a public entity. The term "person" includes those officers, directors, executives, partners, shareholders, employees, members, and agents who are active in management of an entity.

6. Based on information and belief, the **statement which I have marked below is true** in relation to the entity submitting this sworn statement (indicate which statement applies).

☑ Neither the entity submitting this sworn statement, nor any of its officers, directors, executives, partners, shareholders, employees, members, or agents who are active in the management of the entity nor any affiliate of the entity has been charged with and convicted of a public entity crime subsequent to July 1, 1989.

☐ The entity submitting this sworn statement or one (1) or more of its officers, directors, executives, partners, shareholders, employees, members, or agents who are active in the management of the entity or an affiliate of the entity has been charged with and convicted of a public entity crime subsequent to July 1, 1989.

☐ The entity submitting this sworn statement or one (1) or more of its officers, directors, executives, partners, shareholders, employees, members, or agents who are active in the management of the entity or an affiliate of the entity has been charged with and convicted of a public entity crime subsequent to July 1, 1989. However, there has been a subsequent proceeding before a Hearing Office of the State of Florida, Division of Administrative Hearings and the Final Order entered by the Hearing Officer determined that it was not in the public interest to place the entity submitting this sworn statement on the convicted vendor list (attach a copy of the final order).

I UNDERSTAND THAT THE SUBMISSION OF THIS FORM TO THE CONTRACTING OFFICE FOR THE PUBLIC ENTITY IDENTIFIED IN PARAGRAPH 1 ABOVE IS FOR THE PUBLIC ENTITY ONLY AND THAT THIS FORM IS VALID THROUGH DECEMBER 31 OF THE CALENDAR YEAR IN WHICH IT IS FILED. I ALSO UNDERSTAND THAT I AM REQUIRED TO INFORM THE PUBLIC ENTITY PRIOR TO ENTERING INTO A CONTRACT IN EXCESS OF THE THRESHOLD AMOUNT PROVIDED IN SECTION 287.017, FLORIDA STATUTES, FOR CATEGORY TWO OF ANY CHANGE IN THE INFORMATION CONTAINED IN THIS FORM.

STATE OF FLORIDA
COUNTY OF Seminole

The foregoing instrument was sworn to (or affirmed), subscribed, and acknowledged before me by means of ☑ physical presence or ☐ online notarization, this 7th day of April, 2026, by Matt Blanton - President, who is personally known to me or has produced _____ as identification.

(SEAL)

Notary Public State of Florida
Sean E Cosentino
My Commission HH 771051
Expires 2/24/2030

_____
Notary Public – State of Florida

Sean E Cosentino
(Print, Type, Stamp, or Commissioned Name of Notary Public)

VIII. NON-COLLUSION AFFADAVIT

STATE OF Florida COUNTY OF Seminole

I state that I Matt Blanton - President (Name and Title) of Cathcart Construction Company - Florida, LLC (Name of Firm)

I am authorized to make this affidavit on behalf of my firm and its owner, directors and officers. I am the person responsible in my firm for the price(s) and amount(s) of this Response, and the preparation of the Response. I state that:

1. The price(s) and amount(s) of this Response have been arrived at independently and without consultation, communication or agreement with any other Provider, potential provider, Proposal, or potential Proposal.

2. Neither the price(s) nor the amount(s) of this Response, and neither the approximate price(s) nor approximate amount(s) of this Response, have been disclosed to any other firm or person who is a Provider, potential Provider, Proposal, or potential Proposal, and they will not be disclosed before Proposal opening.

3. No attempt has been made or will be made to induce any firm or persons to refrain from submitting a Response for this contract, or to submit a price(s) higher that the prices in this Response, or to submit any intentionally high or noncompetitive price(s) or other form of complementary Response.

4. The Response of my firm is made in good faith and not pursuant to any agreement or discussion with, or inducement from, any firm or person to submit a complementary or other noncompetitive Response.

5. Cathcart Construction Company - Florida, LLC, its affiliates, subsidiaries, officers, director, and employees (Name of Firm) are not currently under investigation, by any governmental agency and have not in the last three years been convicted or found liable for any act prohibited by State or Federal law in any jurisdiction, involving conspiracy or collusion with respect to Proposal, on any public contract, except as follows:

I state that I and the named firm understand and acknowledge that the above representations are material and important, and will be relied on by the State of Florida for which this Response is submitted. I understand and my firm understands that any misstatement in this affidavit is, and shall be treated as, fraudulent concealment from the State of Florida of the true facts relating to the submission of responses for this contract.

Name of Organization: Cathcart Construction Company - Florida, LLC Signed By: _____

Print Name: Matt Blanton - President

The foregoing instrument was sworn to (or affirmed), subscribed, and acknowledged before me by means of ☑ physical presence or ☐ online notarization, this 7th day of April, 2026, by Matt Blanton - President, who is personally known to me or has produced _____ as identification.

(SEAL)

Notary Public State of Florida
Sean E Cosentino
My Commission HH 771051
Expires 2/24/2030

_____
Notary Public – State of Florida

Sean E Cosentino
(Print, Type, Stamp, or Commissioned Name of Notary Public)

Cathcart Construction Company - Florida, LLC
A Safety Company That Builds Infrastructure Projects
1056 Willa Springs Drive, Winter Springs, FL 32708
(407) 629-2900

Statement of Assurance

Cathcart Construction Company – Florida, LLC states that it has NO unresolved and ongoing claims and disputes against it's firm in excess of $500,000 or more. **Cathcart Construction Company – Florida, LLC** also states that it has no claims against the principals of the firm or any claims your or any company may have against a third party in the past (5) years.

This statement of assurance confirms that the firm is not presently in violations of any statutes or regulatory rules that might have an impact on the firm's operations.

X _____ 04/07/2026

Matt Blanton – President

TOP WORK PLACES 2023 Orlando Sentinel
TOP WORK PLACES 2024 Orlando Sentinel
TOP WORK PLACES 2025 Orlando Sentinel

AIA® Document A310™ – 2010

Bid Bond

CONTRACTOR:
(Name, legal status and address)
Cathcart Construction Company
- Florida, LLC
1056 Willa Springs Drive
Winter Springs FL 32708

SURETY:
(Name, legal status and principal place of business)
Swiss Re Corporate Solutions America
Insurance Corporation
1200 Main Street, Suite 800
Kansas City, MO 64105-2478

OWNER:
(Name, legal status and address)
City of St. Pete Beach
155 Corey Avenue
St. Pete Beach, FL 33706

BOND AMOUNT: $ Five Percent of Amount Bid (5%) ----------

PROJECT:
(Name, location or address, and Project number, if any)
Civil On Call Construction Services
St. Pete Beach, FL

ADDITIONS AND DELETIONS:
The author of this document has added information needed for its completion. The author may also have revised the text of the original AIA standard form. An *Additions and Deletions Report* that notes added information as well as revisions to the standard form text is available from the author and should be reviewed. A vertical line in the left margin of this document indicates where the author has added necessary information and where the author has added to or deleted from the original AIA text.

This document has important legal consequences. Consultation with an attorney is encouraged with respect to its completion or modification.

Any singular reference to Contractor, Surety, Owner or other party shall be considered plural where applicable.

The Contractor and Surety are bound to the Owner in the amount set forth above, for the payment of which the Contractor and Surety bind themselves, their heirs, executors, administrators, successors and assigns, jointly and severally, as provided herein. The conditions of this Bond are such that if the Owner accepts the bid of the Contractor within the time specified in the bid documents, or within such time period as may be agreed to by the Owner and Contractor, and the Contractor either (1) enters into a contract with the Owner in accordance with the terms of such bid, and gives such bond or bonds as may be specified in the bidding or Contract Documents, with a surety admitted in the jurisdiction of the Project and otherwise acceptable to the Owner, for the faithful performance of such Contract and for the prompt payment of labor and material furnished in the prosecution thereof; or (2) pays to the Owner the difference, not to exceed the amount of this Bond, between the amount specified in said bid and such larger amount for which the Owner may in good faith contract with another party to perform the work covered by said bid, then this obligation shall be null and void, otherwise to remain in full force and effect. The Surety hereby waives any notice of an agreement between the Owner and Contractor to extend the time in which the Owner may accept the bid. Waiver of notice by the Surety shall not apply to any extension exceeding sixty (60) days in the aggregate beyond the time for acceptance of bids specified in the bid documents, and the Owner and Contractor shall obtain the Surety's consent for an extension beyond sixty (60) days.

If this Bond is issued in connection with a subcontractor's bid to a Contractor, the term Contractor in this Bond shall be deemed to be Subcontractor and the term Owner shall be deemed to be Contractor.

When this Bond has been furnished to comply with a statutory or other legal requirement in the location of the Project, any provision in this Bond conflicting with said statutory or legal requirement shall be deemed deleted herefrom and provisions conforming to such statutory or other legal requirement shall be deemed incorporated herein. When so furnished, the intent is that this Bond shall be construed as a statutory bond and not as a common law bond.

Init.
/
AIA Document A310™ – 2010. Copyright © 1963, 1970 and 2010 by The American Institute of Architects. **All rights reserved.** WARNING: This AIA® Document **is protected by U.S. Copyright Law and International Treaties. Unauthorized reproduction or distribution of this AIA® Document, or any portion of it, may result in severe civil and criminal penalties, and will be prosecuted to the maximum extent possible under the law.** This document was produced by AIA software at 08:45:44 on 12/07/2010 under Order No.3952672523_1 which expires on 07/26/2011, and is not for resale.
User Notes:
(1283017540)

Signed and sealed this 8th day of April, 2026

Sean Cocentino

(Witness)

Cathcart Construction Company - Florida, LLC
(Principal) (Seal)

(Title)

K. Moulton

(Witness) Kelly Moulton

Swiss Re Corporate Solutions America Insurance Corporation
(Surety) (Seal)

Jeffery W. Reich

(Title) Jeffery W. Reich, Attorney-in-Fact &
FL Licensed Resident Agent
Inquiries: 407-786-7770

Init.
/

AIA Document A310™ – 2010. Copyright © 1963, 1970 and 2010 by The American Institute of Architects. **All rights reserved. WARNING:** This AIA® Document is protected by U.S. Copyright Law and International Treaties. Unauthorized reproduction or distribution of this AIA® **Document,** or any portion of it, may result in severe civil and criminal penalties, and will be prosecuted to the maximum extent possible under the law. This document was produced by AIA software at 08:45:44 on 12/07/2010 under Order No.3952672523_1 which expires on 07/26/2011, and is not for resale.
User Notes:
(1283017540)

SWISS RE CORPORATE SOLUTIONS

SWISS RE CORPORATE SOLUTIONS AMERICA INSURANCE CORPORATION ("SRCSAIC")
SWISS RE CORPORATE SOLUTIONS PREMIER INSURANCE CORPORATION ("SRCSPIC")
WESTPORT INSURANCE CORPORATION ("WIC")

GENERAL POWER OF ATTORNEY

KNOW ALL MEN BY THESE PRESENTS, THAT SRCSAIC, a corporation duly organized and existing under laws of the State of Missouri, and having its principal office in the City of Kansas City, Missouri, and SRCSPIC, a corporation organized and existing under the laws of the State of Missouri and having its principal office in the City of Kansas City, Missouri, and WIC, organized under the laws of the State of Missouri, and having its principal office in the City of Kansas City, Missouri, each does hereby make, constitute and appoint:

JEFFREY W. REICH, SUSAN L. REICH, KIM E. NIV, TERESA L. DURHAM, CHERYL A. FOLEY, LISA A. ROSELAND,
EMILY J. GOLECKI, SONJA AMANDA FLOREE HARRIS, ROBERT P. O'LINN, NATHAN K. REICH, and SARAH K. O'LINN

JOINTLY OR SEVERALLY

Its true and lawful Attorney(s)-in-Fact, to make, execute, seal and deliver, for and on its behalf and as its act and deed, bonds or other writings obligatory in the nature of a bond on behalf of each of said Companies, as surety, on contracts of suretyship as are or may be required or permitted by law, regulation, contract or otherwise, provided that no bond or undertaking or contract or suretyship executed under this authority shall exceed the amount of:

TWO HUNDRED MILLION ($200,000,000.00) DOLLARS

This Power of Attorney is granted and is signed by facsimile under and by the authority of the following Resolutions adopted by the Boards of Directors of both SRCSAIC and SRCSPIC at meetings duly called and held on the 18th of November 2021 and WIC by written consent of its Executive Committee dated July 18, 2011.

"RESOLVED, that any two of the President, any Managing Director, any Senior Vice President, any Vice President, the Secretary or any Assistant Secretary be, and each or any of them hereby is, authorized to execute a Power of Attorney qualifying the attorney named in the given Power of Attorney to execute on behalf of the Corporation bonds, undertakings and all contracts of surety, and that each or any of them hereby is authorized to attest to the execution of any such Power of Attorney and to attach therein the seal of the Corporation; and it is

FURTHER RESOLVED, that the signature of such officers and the seal of the Corporation may be affixed to any such Power of Attorney or to any certificate relating thereto by facsimile, and any such Power of Attorney or certificate bearing such facsimile signatures or facsimile seal shall be binding upon the Corporation when so affixed and in the future with regard to any bond, undertaking or contract of surety to which it is attached."

SWISS RE CORPORATE SOLUTIONS AMERICA INSURANCE CORPORATION CORPORATE SEAL 1973 MISSOURI

SWISS RE CORPORATE SOLUTIONS PREMIER INSURANCE CORPORATION CORPORATE SEAL MISSOURI

By _____
Erik Janssens, Senior Vice President of SRCSAIC & Senior Vice President of SRCSPIC & Senior Vice President of WIC

By _____
Gerald Jagrowski, Vice President of SRCSAIC & Vice President of SRCSPIC & Vice President of WIC

WESTPORT INSURANCE CORPORATION CORPORATE SEAL MISSOURI

IN WITNESS WHEREOF, SRCSAIC, SRCSPIC, and WIC have caused their official seals to be hereunto affixed, and these presents to be signed by their authorized officers

this 10TH day of NOVEMBER 20 23

Swiss Re Corporate Solutions America Insurance Corporation
Swiss Re Corporate Solutions Premier Insurance Corporation
Westport Insurance Corporation

State of Illinois
County of Cook ss

On this 10TH day of NOVEMBER, 20 23, before me, a Notary Public personally appeared Erik Janssens, Senior Vice President of SRCSAIC and Senior Vice President of SRCSPIC and Senior Vice President of WIC and Gerald Jagrowski, Vice President of SRCSAIC and Vice President of SPCSPIC and Vice President of WIC, personally known to me, who being by me duly sworn, acknowledged that they signed the above Power of Attorney as officers of and acknowledged said instrument to be the voluntary act and deed of their respective companies

Karen M. Szweda, Notary

I, Jeffrey Goldberg, the duly elected Senior Vice President and Assistant Secretary of SRCSAIC and SRCSPIC and WIC, do hereby certify that the above and foregoing is a true and correct copy of a Power of Attorney given by said SRCSAIC and SRCSPIC and WIC, which is still in full force and effect.
IN WITNESS WHEREOF, I have set my hand and affixed the seals of the Companies this 8th day of April 2026

SWISS RE CORPORATE SOLUTIONS AMERICA INSURANCE CORPORATION CORPORATE SEAL 1973 MISSOURI

OFFICIAL SEAL
KAREN M SZWEDA
Notary Public, State of Illinois
Commission No. 978628
My Commission Expires September 26, 2027

Jeffrey Goldberg, Senior Vice President & Assistant Secretary of SRCSAIC and SRCSPIC and WIC

CCC Cathcart
Construction Company - Florida, LLC
A Safety Company That Builds Infrastructure Projects
1056 Willa Springs Dr Winter Springs, FL 32708
(407) 629-2900

Relevant Projects and References

1) Coolidge Street Utility Improvements: This project included installation of new sanitary sewer and water utilities as well as new road construction. Sanitary included 400LF of 12", 5300LF of 15" PVC, 19 manholes, and active flow bypassing. Water included 4500LF of 10", 310LF of 6" PVC, multiple valves, 4 tapping sleeves, 7 fire hydrant assemblies, and grout filling of old water main. Road construction included 6600CY of excavation, 3664SY of milling & resurfacing, and 1300SY of new roadway paving.
    - Owner, City of Eustis, 10 N. Grove Street, Eustis, FL 32727-0068
    - Daniel Millan / City of Eustis
        - (352) 483-5480 ext. 3105 / MillanD@Eustis.org
    - Final Budget - $3,947,720.00
    - Final Completion – December 2024
    - General Superintendent – Joe Newton

2) Service Area 3 Watermain Rehab Ph. 2 – Installation of 5,980LF of 6" and 1,790LF of 8" DR-18 PVC via open cut. 150LF of 8" HDPE and 140LF of 10" HDPE were installed via HDD. Restoration included 2,190SY of driveway/sidewalk repair, 5,756CY of import fill to replace unsuitable material, and 1,260 SY of asphalt milling and resurfacing.
    - Owner, City of Wauchula, 126 South 7th Avenue, Wauchula, FL 33873
    - John Eason / Deputy City Manager
        - (863) 773-3131 / jeason@cityofwauchula.com
    - Final Budget - $2,497,830.00
    - Final Completion – November 2024
    - General Superintendent – Justin Williams







3) Walnut St Force Main – This project was a Force Main extension with 1980 LF of 14" HDPE directional drill and 2680 LF of 12" PVC open cut. The project utilized 10 gate valves, multiple fittings, and a 12" double line stop bypass to make connections. During the project the team was able to work with the owner to extend a directional drill under a roadway and signage for a community center to reduce the restoration cost and save money on the project.
    - Owner, Toho Water Authority, 951 Martin Luther King Blvd Kissimmee, FL 34741
        - Micah Smart, Engineer II (407) 483-3851 – Msmart@tohowater.com
    - Final Budget - $1,141,109.60
    - Completion – January - June 2023
    - General Superintendent – Justin Williams

4) Urick St Force Main Extension – This Project was a force main upgrade that replaced 3240 LF of 8" PVC and 4880 LF of 10" PVC via open cut. There was also 680 LF of 10" HDPE and 2120 LF of 12" HDPE installed via directional drill. 19 ARV we needed with the force main install. The restoration required asphalt roadway, concrete sidewalk, and concrete driveways. During the project there was the need to change an open cut portion of the project to a directional drill. This was to save multiple large oak trees that would have been needed to remove if the open cut process was done.
    - Owner, City of Fruitland Park, 506 W. Berkman Street Fruitland Park, FL 34731
        - Robb Dicus, Public Works Director (352) 360-6795 – RDicus@fruitlandpark.org
    - Final Budget $2,640,218.00
    - Completion – September 2022 - March 2023
    - General Superintendent – Joe Newton

5) Amanda ST Extension Construction – This project was a roadway extension that performed the installation 2434 LF of 4” PVC water main, 2525 LF of 8” PVC water main, 469 LF of 4” HDPE directional drilled watermain, over 100 new watermain services, and 5 fire hydrants. The sanitary sewer portion of the project consisted of 2097 LF of 8” sewer, 475 LF of 8” sewer, and 10 sewer manholes. The stormwater improvements consisted of 232 LF of 15” RCP, 1600 LF of 18” RCP, 1900 LF of 24” RCP, 17 curb inlets, 3 ditch bottom inlets, and 6 manholes. The road restoration involved 550 SY of brick pavers, 4325 LF of curbing, 5038 SY of 4” sidewalk, 295 CY of gravity wall, and 7686 SY of asphalt restoration.
    - Owner, City of Altamonte Springs, 225 Newburyport Avenue, Altamonte Springs FL 32701
        - Trey Sisk, Construction Manager (407) 571-8572 – tsisk@altamonte.org
    - Final Budget – $3,938,864.50



- Final Completion – January 2020 - June 2021
- General Superintendent – Joe Newton

Bid Form for City of St Pete Beach
On-Call Civil Construction Services
Request for Proposal

Specifications for the numbered pay items can be found in the current FDOT "Standard Specifications for Road and Bridge Construction".
Bid quantities are for comparison purposes only. This contract consists of various projects which are not yet defined and no quantities are guaranteed.

Pay Item No.	Item Description	Units	Est. Quantity	Unit Price	Amount
0101 1 (2501-5000)	MOBILIZATION (PER WORK ASSIGNMENT/LOCATION) - $2,501 TO $5,000	LS	5	$1000.00	$5000.00
0101 1 (5501-25000)	MOBILIZATION (PER WORK ASSIGNMENT/LOCATION) - $5,001 TO $25,000	LS	1	$2000.00	$2000.00
0101 1 (25001-50000)	MOBILIZATION (PER WORK ASSIGNMENT/LOCATION) - $25,001 TO $50,000	LS	1	$5000.00	$5000.00
0101 1 (50001-150000)	MOBILIZATION (PER WORK ASSIGNMENT/LOCATION) - $50,001 TO $150,000	LS	1	$12000.00	$12000.00
0101 1 (150001-250000)	MOBILIZATION (PER WORK ASSIGNMENT/LOCATION) - $150,001 TO $250,000	LS	1	$20000.00	$20000.00
0101 1 (250001-350000)	MOBILIZATION (PER WORK ASSIGNMENT/LOCATION) - $250,001 TO $350,000	LS	1	$30000.00	$30000.00
0101 1 (350001-500000)	MOBILIZATION (PER WORK ASSIGNMENT/LOCATION) - $350,001 to $500,000	LS	1	$35000.00	$35000.00
0101 1 (500001+)	MOBILIZATION (PER WORK ASSIGNMENT/LOCATION) - $500,001 or more	LS	1	$40000.00	$40000.00
0101 1 (2501-5000)	EMERGENCY MOBILIZATION (PER WORK ASSIGNMENT/LOCATION) - $2,501 TO $5,000	LS	1	$1500.00	$1500.00
0101 1 (5501-25000)	EMERGENCY MOBILIZATION (PER WORK ASSIGNMENT/LOCATION) - $5,001 TO $25,000	LS	1	$3000.00	$3000.00
0101 1 (25001-50000)	EMERGENCY MOBILIZATION (PER WORK ASSIGNMENT/LOCATION) - $25,001 TO $50,000	LS	1	$7500.00	$7500.00
0101 1 (50001-150000)	EMERGENCY MOBILIZATION (PER WORK ASSIGNMENT/LOCATION) - $50,001 TO $150,000	LS	1	$18000.00	$18000.00
0101 1 (150001-250000)	EMERGENCY MOBILIZATION (PER WORK ASSIGNMENT/LOCATION) - $150,001 TO $250,000	LS	1	$24000.00	$24000.00
0102 1	MAINTENANCE OF TRAFFIC	Lump Sum (LS) cost to be assigned for each Task Order and shall not exceed 10% of the proposed construction cost.			
0102 3	COMMERCIAL MATERIAL FOR TEMPORARY DRIVEWAY MAINTENANCE	CY	50	$210.00	$10500.00
0102 14	TRAFFIC CONTROL OFFICER	HR	500	$110.00	$55000.00
0102 60	WORK ZONE SIGN	ED	6000	$0.33	$1980.00
0102 61	BUSINESS SIGN	EA	5	$75.00	$375.00
0102 71 11	BARRIER WALL, TEMPORARY, F&I, CONCRETE	LF	200	$92.00	$18400.00
0102 71 13	BARRIER WALL, TEMPORARY, F&I, LOW PROFILE, CONCRETE	LF	200	$117.00	$23400.00
0102 71 14	BARRIER WALL, TEMPORARY, F&I, TYPE K	LF	200	$102.00	$20400.00
0102 71 21	BARRIER WALL, TEMPORARY, RELOCATE, CONCRETE	LF	200	$81.00	$16200.00
0102 71 23	BARRIER WALL, TEMPORARY, RELOCATE, LOW PROFILE, CONCRETE	LF	200	$84.00	$16800.00
0102 71 24	BARRIER WALL, TEMPORARY, RELOCATE, TYPE K	LF	200	$81.00	$16200.00

0102 73	TEMPORARY GUARDRAIL	LF	20	$225.00	$4500.00
0102 74 1	CHANNELIZING DEVICE- TYPES I, II, DI, VP, DRUM, OR LCD	ED	15000	$0.75	$11250.00
0102 74 2	CHANNELIZING DEVICE, TYPE III, 6'	ED	1000	$2.00	$2000.00
0102 74 7	CHANNELIZING DEVICE- PEDESTRIAN LCD (LONGITUDINAL CHANNELIZING DEVICE)	LF	1000	$2.00	$2000.00
0102 75 1	TEMPORARY SEPARATOR, F&I REMOVE	LF	500	$75.00	$37500.00
0102 75 2	TEMPORARY SEPARATOR, F&I REMAIN	LF	500	$115.00	$57500.00
0102 75 3	TEMPORARY SEPARATOR, INSTALL	LF	500	$40.00	$20000.00
0102 75 4	TEMPORARY SEPARATOR, RELOCATE	LF	500	$40.00	$20000.00
0102 75 5	TEMPORARY SEPARATOR, REMOVE	LF	500	$20.00	$10000.00
0102 76	ARROW BOARD / ADVANCE WARNING ARROW PANEL	ED	250	$45.00	$11250.00
0102 78	TEMPORARY RETROREFLECTIVE PAVEMENT MARKER	EA	50	$7.00	$350.00
0102 89 1	TEMPORARY CRASH CUSHION, REDIRECTIVE OPTION	LO	5	$4100.00	$20500.00
0102 99	PORTABLE CHANGEABLE MESSAGE SIGN, TEMPORARY	ED	600	$45.00	$27000.00
0102 104	TEMPORARY SIGNALIZATION AND MAINTENANCE, INTERSECTION	ED	100	$195.00	$19500.00
0102 107 1	TEMPORARY TRAFFIC DETECTION AND MAINTENANCE, INTERSECTION	ED	100	$186.00	$18600.00
0102 150 1	PORTABLE REGULATORY SIGN	ED	50	$24.00	$1200.00
0102 150 2	RADAR SPEED DISPLAY UNIT	ED	50	$28.00	$1400.00
0102 911 1	PAVEMENT MARKING REMOVABLE TAPE, WHITE OR BLACK, SKIP	LF	500	$10.00	$5000.00
0102 911 2	PAVEMENT MARKING REMOVABLE TAPE, WHITE, BLACK, SOLID	LF	500	$10.00	$5000.00
0102 911 3	PAVEMENT MARKING REMOVABLE TAPE, WHITE OR BLACK, OTHER	SF	25	$100.00	$2500.00
0102 912 1	PAVT MARKING REMOVABLE TAPE, YELLOW, SKIP	LF	500	$10.00	$5000.00
0102 912 2	PAVEMENT MARKING REMOVABLE TAPE, YELLOW, SOLID	LF	500	$10.00	$5000.00
0102 912 3	PAVEMENT MARKING REMOVABLE TAPE, YELLOW, OTHER	SF	25	$100.00	$2500.00
0104 1	ARTIFICIAL COVERINGS /ROLLED EROSION CONTROL PRODUCTS	SY	150	$12.00	$1800.00
0104 10 3	SEDIMENT BARRIER	LF	5000	$5.00	$25000.00
0104 11	FLOATING TURBIDITY BARRIER	LF	100	$20.00	$2000.00
0104 12	STAKED TURBIDITY BARRIER- NYLON REINFORCED PVC	LF	100	$20.00	$2000.00
0104 13 1	STAKED SILT FENCE, TYPE III	LF	500	$12.00	$6000.00

0104 13 2	STAKED SILT FENCE, TYPE IV	LF	500	$16.00	$8000.00
0104 18	INLET PROTECTION SYSTEM	EA	100	$1,200.00	$120000.00
0107 1	LITTER REMOVAL	AC	10	$750.00	$7500.00
0107 2	MOWING	AC	10	$320.00	$3200.00
0110 2 1	CLEARING & GRUBBING	AC	10	$50,000.00	$500000.00
0110 3	REMOVAL OF EXISTING STRUCTURES/BRIDGES	SF	20	$160.00	$3200.00
0110 4 10	REMOVAL OF EXISTING CONCRETE	SY	2000	$24.00	$48000.00
0110 7 1	MAILBOX, F&I SINGLE	EA	5	$550.00	$2750.00
0120 1	REGULAR EXCAVATION	CY	3000	$45.00	$135000.00
0120 3	LATERAL DITCH EXCAVATION	CY	100	$55.00	$5500.00
0120 4	SUBSOIL EXCAVATION	CY	100	$45.00	$4500.00
0120 5	CHANNEL EXCAVATION	CY	100	$75.00	$7500.00
0120 6	EMBANKMENT	CY	500	$45.00	$22500.00
0121 70	FLOWABLE FILL	CY	50	$800.00	$40000.00
0125 1	EXCAVATION FOR STRUCTURES	CY	25	$25.00	$625.00
0145 1	GEOSYNTHETIC REINFORCED SOIL SLOPE	SF	25	$32.00	$800.00
0160 4	TYPE B STABILIZATION	SY	7000	$24.00	$168000.00
0162 1 11	PREPARED SOIL LAYER-6" DEPTH	SY	50	$35.00	$1750.00
0162 1 12	PREPARED SOIL LAYER, FINISH SOIL LAYER, 12"	SY	50	$50.00	$2500.00
0162 1 21	PREPARED SOIL LAYER, ORGANIC SOIL LAYER, 6"	SY	50	$50.00	$2500.00
285701	OPTIONAL BASE, BASE GROUP 01	SY	100	$70.00	$7000.00
285702	OPTIONAL BASE, BASE GROUP 02	SY	100	$75.00	$7500.00
285703	OPTIONAL BASE, BASE GROUP 03	SY	100	$80.00	$8000.00
285704	OPTIONAL BASE, BASE GROUP 04	SY	1000	$85.00	$85000.00
285705	OPTIONAL BASE, BASE GROUP 05	SY	100	$90.00	$9000.00
285706	OPTIONAL BASE, BASE GROUP 06	SY	1000	$105.00	$105000.00
285707	OPTIONAL BASE, BASE GROUP 07	SY	100	$110.00	$11000.00
285708	OPTIONAL BASE, BASE GROUP 08	SY	1000	$125.00	$125000.00

285709	OPTIONAL BASE, BASE GROUP 09	SY	100	$130.00	$13000.00
285710	OPTIONAL BASE GROUP 10	SY	100	$125.00	$12500.00
285711	OPTIONAL BASE, BASE GROUP 11	SY	100	$140.00	$14000.00
285712	OPTIONAL BASE, BASE GROUP 12	SY	100	$170.00	$17000.00
285713	OPTIONAL BASE, BASE GROUP 13	SY	100	$180.00	$18000.00
285714	OPTIONAL BASE, BASE GROUP 14	SY	100	$190.00	$19000.00
285715	OPTIONAL BASE, BASE GROUP 15	SY	100	$210.00	$21000.00
0327 70 1	MILLING EXIST ASPH PAVT, 1" AVG DEPTH	SY	1000	$24.00	$24000.00
0327 70 2	MILLING EXIST ASPH PAVT, 3 1/2" AVG DEPTH	SY	200	$74.00	$14800.00
0327 70 3	MILLING EXIST ASPH PAVT, 4 1/2" AVG DEPTH	SY	200	$78.00	$15600.00
0327 70 4	MILLING EXIST ASPH PAVT, 3" AVG DEPTH	SY	200	$74.00	$14800.00
0327 70 5	MILLING EXIST ASPH PAVT, 2" AVG DEPTH	SY	200	$72.00	$14400.00
0327 70 6	MILLING EXIST ASPH PAVT, 1 1/2" AVG DEPTH	SY	5000	$12.00	$60000.00
0327 70 7	MILLING EXIST ASPH PAVT, 4" AVG DEPTH	SY	200	$74.00	$14800.00
0327 70 8	MILLING EXIST ASPH PAVT, 2 1/2" AVG DEPTH	SY	200	$70.00	$14000.00
0327 70 11	MILLING EXIST ASPH PAVT, 2 1/4" AVG DEPTH	SY	200	$70.00	$14000.00
0327 70 12	MILLING EXIST ASPH PAVT, 1 1/4" AVG DEPTH	SY	200	$72.00	$14400.00
0327 70 13	MILLING EXIST ASPH PAVT, 1 3/4" AVG DEPTH	SY	200	$72.00	$14400.00
0327 70 15	MILLING EXIST ASPH PAVT, 2 3/4" AVG DEPTH	SY	200	$70.00	$14000.00
0327 70 16	MILLING EXIST ASPH PAVT, 1/2" AVG DEPTH	SY	200	$72.00	$14400.00
0327 70 17	MILLING EXIST ASPH PAVT, 3 1/4" AVG DEPTH	SY	200	$74.00	$14800.00
0327 70 19	MILLING EXIST ASPH PAVT, 3/4" AVG DEPTH	SY	200	$74.00	$14800.00
0327 70 20	MILLING EXIST ASPH PAVT, 3 3/4" AVG DEPTH	SY	200	$74.00	$14800.00
0334 1 12 (1-99)	SUPERPAVE ASPHALTIC CONC, TRAFFIC B, 1-99 TONS	TN	50	$550.00	$27500.00
0334 1 12 (100-199)	SUPERPAVE ASPHALTIC CONC, TRAFFIC B, 100 - 199 TONS	TN	150	$525.00	$78750.00
0334 1 12 (200-300)	SUPERPAVE ASPHALTIC CONC, TRAFFIC B, 200 - 300 TONS	TN	250	$515.00	$128750.00
0334 1 12 (300+)	SUPERPAVE ASPHALTIC CONC, TRAFFIC B, 300 TONS OR MORE	TN	350	$500.00	$175000.00
0334 1 13 (1-99)	SUPERPAVE ASPHALTIC CONC, TRAFFIC C 1 - 99 TONS	TN	50	$540.00	$27000.00

0334 1 13 (100-199)	SUPERPAVE ASPHALTIC CONC, TRAFFIC C 100 - 199 TONS	TN	150	$535.00	$80250.00
0334 1 13 (200-300)	SUPERPAVE ASPHALTIC CONC, TRAFFIC C 200 -300 TONS	TN	250	$528.00	$132000.00
0334 1 13 (300+)	SUPERPAVE ASPHALTIC CONC, TRAFFIC C 300 TONS OR MORE	TN	350	$520.00	$182000.00
0334 1 52 (0-99)	SUPERPAVE ASPHALTIC CONCRETE, TRAFFIC B, PG76-22 0-99 TONS	TN	50	$585.00	$29250.00
0334 1 52 (100-199)	SUPERPAVE ASPHALTIC CONCRETE, TRAFFIC B, PG76-22 100-199 TONS	TN	150	$575.00	$86250.00
0334 1 52 (200-300)	SUPERPAVE ASPHALTIC CONCRETE, TRAFFIC B, PG76-22 200-300 TONS	TN	250	$570.00	$142500.00
0334 1 52 (300+)	SUPERPAVE ASPHALTIC CONCRETE, TRAFFIC B, PG76-22 300 TONS OR MORE	TN	350	$560.00	$196000.00
0334 1 53 (0-99)	SUPERPAVE ASPHALTIC CONCRETE, TRAFFIC C, PG76-22 0-99 TONS	TN	50	$580.00	$29000.00
0334 1 53 (100-199)	SUPERPAVE ASPHALTIC CONCRETE, TRAFFIC C, PG76-22 100-199 TONS	TN	150	$575.00	$86250.00
0334 1 53 (200-300)	SUPERPAVE ASPHALTIC CONCRETE, TRAFFIC C, PG76-22 200-300 TONS	TN	250	$570.00	$142500.00
0334 1 53 (300+)	SUPERPAVE ASPHALTIC CONCRETE, TRAFFIC C, PG76-22 300 TONS OR MORE	TN	350	$560.00	$196000.00
0334 1 54 (0-99)	SUPERPAVE ASPHALTIC CONCRETE, TRAFFIC D, PG76-22 0-99 TONS	TN	50	$580.00	$29000.00
0334 1 54 (100-199)	SUPERPAVE ASPHALTIC CONCRETE, TRAFFIC D, PG76-22 100-199 TONS	TN	150	$575.00	$86250.00
0334 1 54 (200-300)	SUPERPAVE ASPHALTIC CONCRETE, TRAFFIC D, PG76-22 200-300 TONS	TN	250	$570.00	$142500.00
0334 1 54 (300+)	SUPERPAVE ASPHALTIC CONCRETE, TRAFFIC D, PG76-22 300 TONS OR MORE	TN	350	$560.00	$196000.00
0334 1 56 (1-99)	SUPERPAVE ASPHALTIC CONCRETE, TRAFFIC B, HIGH POLYMER 0-99 TONS	TN	50	$650.00	$32500.00
0334 1 56 (100-199)	SUPERPAVE ASPHALTIC CONCRETE, TRAFFIC B, HIGH POLYMER 100-199 TONS	TN	150	$640.00	$96000.00
0334 1 56 (200-300)	SUPERPAVE ASPHALTIC CONCRETE, TRAFFIC B, HIGH POLYMER 200-300 TONS	TN	250	$635.00	$158750.00
0334 1 56 (300+)	SUPERPAVE ASPHALTIC CONCRETE, TRAFFIC B, HIGH POLYMER 300 TONS OR MORE	TN	350	$630.00	$220500.00
0334 1 57 (0-99)	SUPERPAVE ASPHALTIC CONCRETE, TRAFFIC C, HIGH POLYMER 0-99 TONS	TN	50	$650.00	$32500.00
0334 1 57 (100-199)	SUPERPAVE ASPHALTIC CONCRETE, TRAFFIC C, HIGH POLYMER 100-199 TONS	TN	150	$640.00	$96000.00
0334 1 57 (200-300)	SUPERPAVE ASPHALTIC CONCRETE, TRAFFIC C, HIGH POLYMER 200-300 TONS	TN	250	$635.00	$158750.00
0334 1 57 (300+)	SUPERPAVE ASPHALTIC CONCRETE, TRAFFIC C, HIGH POLYMER 300 TONS OR MORE	TN	350	$630.00	$220500.00
0334 1 58 (0-99)	SUPERPAVE ASPHALTIC CONCRETE, TRAFFIC D, HIGH POLYMER 0-99 TONS	TN	50	$650.00	$32500.00
0334 1 58 (100-199)	SUPERPAVE ASPHALTIC CONCRETE, TRAFFIC D, HIGH POLYMER 100-199 TONS	TN	150	$640.00	$96000.00
0334 1 58 (200-300)	SUPERPAVE ASPHALTIC CONCRETE, TRAFFIC D, HIGH POLYMER 200-300 TONS	TN	250	$635.00	$158750.00
0334 1 58 (300+)	SUPERPAVE ASPHALTIC CONCRETE, TRAFFIC D, HIGH POLYMER 300 TONS OR MORE	TN	350	$630.00	$220500.00
0337 7 80 (0-99)	ASPHALT CONCRETE FRICTION COURSE,TRAFFIC B, FC-9.5, PG 76-22 0-99 TONS	TN	50	$585.00	$29250.00

0337 7 80 (100-199)	ASPHALT CONCRETE FRICTION COURSE,TRAFFIC B, FC-9.5, PG 76-22 100-199 TONS	TN	150	$575.00	$86250.00
0337 7 80 (200-300)	ASPHALT CONCRETE FRICTION COURSE,TRAFFIC B, FC-9.5, PG 76-22 200-300 TONS	TN	250	$570.00	$142500.00
0337 7 80 (300+)	ASPHALT CONCRETE FRICTION COURSE,TRAFFIC B, FC-9.5, PG 76-22 300 TONS OR MORE	TN	350	$560.00	$196000.00
0337 7 81 (0-99)	ASPHALT CONCRETE FRICTION COURSE,TRAFFIC B, FC-12.5, PG 76-22 0-99 TONS	TN	50	$580.00	$29000.00
0337 7 81 (100-199)	ASPHALT CONCRETE FRICTION COURSE,TRAFFIC B, FC-12.5, PG 76-22 100-199 TONS	TN	150	$575.00	$86250.00
0337 7 81 (200-300)	ASPHALT CONCRETE FRICTION COURSE,TRAFFIC B, FC-12.5, PG 76-22 200-300 TONS	TN	250	$570.00	$142500.00
0337 7 81 (300+)	ASPHALT CONCRETE FRICTION COURSE,TRAFFIC B, FC-12.5, PG 76-22 300 TONS OR MORE	TN	350	$560.00	$196000.00
0337 7 82 (0-99)	ASPHALT CONCRETE FRICTION COURSE,TRAFFIC C, FC-9.5, PG 76-22 0-99 TONS	TN	50	$580.00	$29000.00
0337 7 82 (100-199)	ASPHALT CONCRETE FRICTION COURSE,TRAFFIC C, FC-9.5, PG 76-22 100-199 TONS	TN	150	$575.00	$86250.00
0337 7 82 (200-300)	ASPHALT CONCRETE FRICTION COURSE,TRAFFIC C, FC-9.5, PG 76-22 200-300 TONS	TN	250	$570.00	$142500.00
0337 7 82 (300+)	ASPHALT CONCRETE FRICTION COURSE,TRAFFIC C, FC-9.5, PG 76-22 300 TONS OR MORE	TN	350	$560.00	$196000.00
0337 7 83 (0-99)	ASPHALT CONCRETE FRICTION COURSE,TRAFFIC C, FC-12.5, PG 76-22 0-99 TONS	TN	50	$580.00	$29000.00
0337 7 83 (100-199)	ASPHALT CONCRETE FRICTION COURSE,TRAFFIC C, FC-12.5, PG 76-22 100-199 TONS	TN	150	$575.00	$86250.00
0337 7 83 (200-300)	ASPHALT CONCRETE FRICTION COURSE,TRAFFIC C, FC-12.5, PG 76-22 200-300 TONS	TN	250	$570.00	$142500.00
0337 7 83 (300+)	ASPHALT CONCRETE FRICTION COURSE,TRAFFIC C, FC-12.5, PG 76-22 300 TONS OR MORE	TN	350	$560.00	$196000.00
0337 7 85 (0-99)	ASPHALT CONCRETE FRICTION COURSE,TRAFFIC D, FC-12.5, PG 76-22 0-99 TONS	TN	50	$580.00	$29000.00
0337 7 85 (100-199)	ASPHALT CONCRETE FRICTION COURSE,TRAFFIC D, FC-12.5, PG 76-22 100-199 TONS	TN	150	$575.00	$86250.00
0337 7 85 (200-300)	ASPHALT CONCRETE FRICTION COURSE,TRAFFIC D, FC-12.5, PG 76-22 200-300 TONS	TN	250	$570.00	$142500.00
0337 7 85 (300+)	ASPHALT CONCRETE FRICTION COURSE,TRAFFIC D, FC-12.5, PG 76-22 300 TONS OR MORE	TN	350	$560.00	$196000.00
0337 7 90 (0-99)	ASPHALT CONCRETE FRICTION COURSE,TRAFFIC B, FC-9.5, HIGH POLYMER 0-99 TONS	TN	50	$650.00	$32500.00
0337 7 90 (100-199)	ASPHALT CONCRETE FRICTION COURSE,TRAFFIC B, FC-9.5, HIGH POLYMER 100-199 TONS	TN	150	$645.00	$96750.00
0337 7 90 (200-300)	ASPHALT CONCRETE FRICTION COURSE,TRAFFIC B, FC-9.5, HIGH POLYMER 200-300 TONS	TN	250	$640.00	$160000.00
0337 7 90 (300+)	ASPHALT CONCRETE FRICTION COURSE,TRAFFIC B, FC-9.5, HIGH POLYMER 300 TONS OR MORE	TN	350	$630.00	$220500.00
0337 7 93 (0-99)	ASPHALT CONCRETE FRICTION COURSE,TRAFFIC C, FC-12.5, HIGH POLYMER 0-99 TONS	TN	50	$655.00	$32750.00
0337 7 93 (100-199)	ASPHALT CONCRETE FRICTION COURSE,TRAFFIC C, FC-12.5, HIGH POLYMER 100-199 TONS	TN	150	$650.00	$97500.00
0337 7 93 (200-300)	ASPHALT CONCRETE FRICTION COURSE,TRAFFIC C, FC-12.5, HIGH POLYMER 200-300 TONS	TN	250	$640.00	$160000.00
0337 7 93 (300+)	ASPHALT CONCRETE FRICTION COURSE,TRAFFIC C, FC-12.5, HIGH POLYMER 300 TONS OR MORE	TN	350	$635.00	$222250.00
0337 7 94 (0-99)	ASPHALT CONCRETE FRICTION COURSE,TRAFFIC D, FC-12.5, HIGH POLYMER 0-99 TONS	TN	50	$655.00	$32750.00

0337 7 94 (100-199)	ASPHALT CONCRETE FRICTION COURSE,TRAFFIC D, FC-12.5, HIGH POLYMER 100-199 TONS	TN	150	$650.00	$97500.00
0337 7 94 (200-300)	ASPHALT CONCRETE FRICTION COURSE,TRAFFIC D, FC-12.5, HIGH POLYMER 200-300 TONS	TN	250	$640.00	$160000.00
0337 7 94 (300+)	ASPHALT CONCRETE FRICTION COURSE,TRAFFIC D, FC-12.5, HIGH POLYMER 300 TONS OR MORE	TN	350	$635.00	$222250.00
0339 1	MISCELLANEOUS ASPHALT PAVEMENT	TN	25	$1,500.00	$37500.00
0350 3 5	PLAIN CEMENT CONCRETE PAVEMENT, 8"	SY	100	$110.00	$11000.00
0350 3 9	PLAIN CEMENT CONCRETE PAVEMENT, 10"	SY	100	$120.00	$12000.00
0350 3 13	PLAIN CEMENT CONCRETE PAVEMENT, 12"	SY	100	$130.00	$13000.00
0350 5	CLEANING & SEALING JOINTS- CONCRETE PAVEMENT:	LF	100	$7.00	$700.00
0350 30 13	CONCRETE PAVEMENT FOR ROUNDABOUT APRON, 12" DEPTH	SY	100	$300.00	$30000.00
0352 70	GRINDING CONCRETE PAVEMENT	SY	100	$12.00	$1200.00
0400 0 11	CONCRETE CLASS NS, GRAVITY WALL	CY	10	$3,200.00	$32000.00
0400 1 2	CONCRETE CLASS I, ENDWALLS	CY	10	$3,200.00	$32000.00
0400 1 11	CONCRETE CLASS I, RETAINING WALLS	CY	10	$3,200.00	$32000.00
0400 2 1	CONCRETE CLASS II, CULVERTS	CY	10	$3,200.00	$32000.00
0400 2 2	CONCRETE CLASS II, ENDWALLS	CY	10	$3,800.00	$38000.00
0400 2 5	CONCRETE CLASS II, BRIDGE SUBSTRUCTURE	CY	10	$3,900.00	$39000.00
0400 2 11	CONCRETE CLASS II, RETAINING WALLS	CY	10	$2,500.00	$25000.00
0400 3 1	CONCRETE CLASS III, CULVERTS	CY	10	$3,200.00	$32000.00
0400 3 8	CONCRETE CLASS III, BULKHEAD	CY	10	$1,850.00	$18500.00
0400 4 1	CONCRETE CLASS IV, CULVERTS	CY	10	$3,800.00	$38000.00
0400 4 2	CONCRETE CLASS IV, ENDWALLS	CY	10	$3,300.00	$33000.00
0400 4 5	CONCRETE CLASS IV, BRIDGE SUBSTRUCTURE	CY	10	$3,950.00	$39500.00
0400 4 11	CONC CLASS IV, RETAINING WALLS	CY	10	$2,400.00	$24000.00
0400 145	CLEANING CONCRETE SURFACE	SF	20	$3.00	$60.00
0401 70 1	RESTORE SPALLED AREAS, EPOXY	CF	10	$1,100.00	$11000.00
0401 70 4	RESTORE SPALLED AREAS, PORTLAND CEMENT GROUT	CF	10	$1,100.00	$11000.00
0401 70 5	RESTORE SPALLED AREAS, CONTRACTORS OPTION	CF	10	$1,100.00	$11000.00
0411 1	EPOXY MATERIAL FOR CRACK INJECTION- STRUCTURES REHAB	GA	10	$850.00	$8500.00

0411 2	CRACKS INJECT & SEAL- STRUCTURES REHAB	LF	25	$650.00	$16250.00
413-149	PENETRANT SEALER	GA	10	$400.00	$4000.00
413-154	CLEANING & SEALING CONCRETE SURFACES- PENETRANT SEALER OR METHACRYLATES	SF	25	$3.00	$75.00
0415 1 1	REINFORCING STEEL- ROADWAY	LB	100	$2.00	$200.00
0415 1 3	REINFORCING STEEL- RETAINING WALL	LB	100	$5.00	$500.00
0415 1 5	REINFORCING STEEL- BRIDGE SUBSTRUCTURE	LB	100	$3.00	$300.00
0415 1 6	REINFORCING STEEL- MISCELLANEOUS	LB	100	$9.00	$900.00
0415 1 8	REINFORCING STEEL- BULKHEAD	LB	100	$9.00	$900.00
0425 1201	INLETS, CURB, TYPE 9, <10'	EA	3	$12,000.00	$36000.00
0425 1202	INLETS, CURB, TYPE 9, >10'	EA	3	$17,000.00	$51000.00
0425 1203	INLETS, CURB, TYPE 9, J BOT, <10'	EA	3	$21,000.00	$63000.00
0425 1204	INLETS, CURB, TYPE 9, J BOT, >10'	EA	3	$27,000.00	$81000.00
0425 1205	INLETS, CURB, TYPE 9, PARTIAL	EA	3	$8,500.00	$25500.00
0425 1209	INLETS, CURB, TYPE 9, MODIFY	EA	3	$7,500.00	$22500.00
0425 1211	INLETS, CURB, TYPE 10, <10'	EA	3	$14,000.00	$42000.00
0425 1212	INLETS, CURB, TYPE 10, >10'	EA	3	$20,000.00	$60000.00
0425 1213	INLETS, CURB, TYPE 10, J BOT <10'	EA	3	$22,000.00	$66000.00
0425 1214	INLETS, CURB, TYPE 10, J BOT >10'	EA	3	$27,700.00	$83100.00
0425 1215	INLETS, CURB, TYPE 10, PARTIAL	EA	3	$8,500.00	$25500.00
0425 1311	INLETS, CURB, TYPE P-1, <10'	EA	3	$15,000.00	$45000.00
0425 1312	INLETS, CURB TYPE P-1, >10'	EA	3	$25,000.00	$75000.00
0425 1315	INLETS, CURB TYPE P-1, PARTIAL	EA	3	$8,500.00	$25500.00
0425 1319	INLETS, CURB TYPE P-1, MODIFY	EA	3	$7,550.00	$22650.00
0425 1321	INLETS, CURB, TYPE P-2, <10'	EA	3	$15,000.00	$45000.00
0425 1322	INLETS, CURB, TYPE P-2, >10'	EA	3	$25,000.00	$75000.00
0425 1325	INLETS, CURB, TYPE P-2, PARTIAL	EA	3	$8,500.00	$25500.00
0425 1329	INLETS, CURB TYPE P-2, MODIFY	EA	3	$7,550.00	$22650.00
0425 1331	INLETS, CURB, TYPE P-3, <10'	EA	3	$15,000.00	$45000.00

0425 1332	INLETS, CURB. TYPE P-3, >10'	EA	3	$25,000.00	$75000.00
0425 1335	INLETS, CURB, TYPE P-3, PARTIAL	EA	3	$8,500.00	$25500.00
0425 1341	INLETS, CURB, TYPE P-4, <10'	EA	3	$15,000.00	$45000.00
0425 1342	INLETS, CURB, TYPE P-4, >10'	EA	3	$25,000.00	$75000.00
0425 1345	INLETS, CURB, TYPE P-4, PARTIAL	EA	3	$8,500.00	$25500.00
0425 1349	INLETS, CURB, TYPE P-4, MODIFY	EA	3	$7,500.00	$22500.00
0425 1351	INLETS, CURB, TYPE P-5, <10'	EA	3	$14,000.00	$42000.00
0425 1352	INLETS, CURB, TYPE P-5, >10'	EA	3	$24,000.00	$72000.00
0425 1355	INLETS, CURB, TYPE P-5, PARTIAL	EA	3	$8,500.00	$25500.00
0425 1359	INLETS, CURB, TYPE P-5, MODIFY	EA	3	$7,500.00	$22500.00
0425 1361	INLETS, CURB, TYPE P-6, <10'	EA	3	$15,000.00	$45000.00
0425 1362	INLETS, CURB, TYPE P-6, >10'	EA	3	$25,000.00	$75000.00
0425 1365	INLETS, CURB, TYPE P-6, PARTIAL	EA	3	$8,500.00	$25500.00
0425 1369	INLETS, CURB, TYPE P-6, MODIFY	EA	3	$7,500.00	$22500.00
0425 1411	INLETS, CURB TYPE J-1, <10'	EA	3	$19,000.00	$57000.00
0425 1412	INLETS, CURB, TYPE J-1, >10'	EA	3	$30,000.00	$90000.00
0425 1415	INLETS, CURB, TYPE J-1, PARTIAL	EA	3	$12,000.00	$36000.00
0425 1419	INLETS, CURB, TYPE J-1, MODIFY	EA	3	$8,500.00	$25500.00
0425 1421	INLETS, CURB, TYPE J-2, <10'	EA	3	$20,000.00	$60000.00
0425 1422	INLETS, CURB, TYPE J-2, >10'	EA	3	$30,000.00	$90000.00
0425 1425	INLETS, CURB, TYPE J-2, PARTIAL	EA	3	$12,000.00	$36000.00
0425 1429	INLETS, CURB, TYPE J-2, MODIFY	EA	3	$7,500.00	$22500.00
0425 1431	INLETS, CURB, TYPE J-3, <10'	EA	3	$13,250.00	$39750.00
0425 1432	INLETS, CURB, TYPE J-3, >10'	EA	3	$19,750.00	$59250.00
0425 1435	INLETS, CURB, TYPE J-3, PARTIAL	EA	3	$8,250.00	$24750.00
0425 1441	INLETS, CURB, TYPE J-4, <10'	EA	3	$13,250.00	$39750.00
0425 1442	INLETS, CURB, TYPE J-4, >10'	EA	3	$19,750.00	$59250.00
0425 1445	INLETS, CURB, TYPE J-4, PARTIAL	EA	3	$8,250.00	$24750.00

0425 1451	INLETS, CURB, TYPE J-5, <10'	EA	3	$9,250.00	$27750.00
0425 1452	INLETS, CURB, TYPE J-5, >10'	EA	3	$15,750.00	$47250.00
0425 1455	INLETS, CURB, TYPE J-5, PARTIAL	EA	3	$5,250.00	$15750.00
0425 1459	INLETS, CURB, TYPE J-5, MODIFY	EA	3	$7,500.00	$22500.00
0425 1461	INLETS, CURB, TYPE J-6, <10'	EA	3	$22,000.00	$66000.00
0425 1462	INLETS, CURB, TYPE J-6, >10'	EA	3	$35,000.00	$105000.00
0425 1465	INLETS, CURB, TYPE J-6, PARTIAL	EA	3	$12,000.00	$36000.00
0425 1469	INLETS, CURB, TYPE J-6, MODIFY	EA	3	$8,500.00	$25500.00
0425 1471	INLETS, CURB, TYPE 7, <10'	EA	3	$14,000.00	$42000.00
0425 1472	INLETS, CURB, TYPE 7, >10'	EA	3	$24,000.00	$72000.00
0425 1473	INLETS, CURB, TYPE 7, J BOT , <10'	EA	3	$22,000.00	$66000.00
0425 1474	INLETS, CURB, TYPE 7, J BOT ,>10'	EA	3	$32,000.00	$96000.00
0425 1475	INLETS, CURB, TYPE 7, PARTIAL	EA	3	$8,500.00	$25500.00
0425 1479	INLETS, CURB, TYPE 7, MODIFY	EA	3	$7,500.00	$22500.00
0425 1481	INLETS, CURB, TYPE 8, <10'	EA	3	$14,000.00	$42000.00
0425 1483	INLETS, CURB, TYPE 8, J BOT , <10'	EA	3	$24,000.00	$72000.00
0425 1484	INLETS, CURB, TYPE 8, J BOT ,>10'	EA	3	$22,000.00	$66000.00
0425 1485	INLETS, CURB, TYPE 8, PARTIAL	EA	3	$32,000.00	$96000.00
0425 1489	INLETS, CURB, TYPE 8, MODIFY	EA	3	$8,500.00	$25500.00
0425 1501	INLETS, DT BOT, TYPE A, <10'	EA	3	$7,500.00	$22500.00
0425 1502	INLETS, DT BOT, TYPE A, >10'	EA	3	$14,000.00	$42000.00
0425 1503	INLETS, DT BOT, TYPE A, J BOT, <10'	EA	3	$24,000.00	$72000.00
0425 1504	INLETS, DT BOT, TYPE A, J BOT, >10'	EA	3	$22,000.00	$66000.00
0425 1505	INLETS, DT BOT, TYPE A, PARTIAL	EA	3	$12,000.00	$36000.00
0425 1511	INLETS, DT BOT, TYPE B, <10'	EA	3	$8,500.00	$25500.00
0425 1512	INLETS, DT BOT, TYPE B, >10'	EA	3	$17,000.00	$51000.00
0425 1513	INLETS, DT BOT, TYPE B, J BOT, <10'	EA	3	$22,000.00	$66000.00
0425 1514	INLETS, DT BOT, TYPE B, J BOT, >10'	EA	3	$30,000.00	$90000.00

0425 1515	INLETS, DT BOT, TYPE B, PARTIAL	EA	3	$11,000.00	$33000.00
0425 1519	INLETS, DT BOT, TYPE B, MODIFY	EA	3	$7,500.00	$22500.00
0425 1521	INLETS, DT BOT, TYPE C,<10'	EA	3	$8,500.00	$25500.00
0425 1522	INLETS, DT BOT, TYPE C,>10'	EA	3	$21,000.00	$63000.00
0425 1523	INLETS, DT BOT, TYPE C,JBOT, <10'	EA	3	$14,000.00	$42000.00
0425 1524	INLETS, DT BOT, TYPE C, JBOT, >10'	EA	3	$24,000.00	$72000.00
0425 1525	INLETS, DITCH BOTTOM, TYPE C, PARTIAL	EA	3	$8,500.00	$25500.00
0425 1529	INLETS, DT BOT, TYPE C, MODIFY	EA	3	$7,000.00	$21000.00
0425 1531	INLETS, DITCH BOTTOM, TYPE C MODIFIED- BACK OF SIDEWALK, <10'	EA	3	$15,000.00	$45000.00
0425 1532	INLETS, DITCH BOTTOM, TYPE C MODIFIED- BACK OF SIDEWALK, >10'	EA	3	$18,000.00	$54000.00
0425 1533	INLETS, DITCH BOTTOM TYPE C MODIFIED- BACK OF SIDEWALK, J BOT, <10'	EA	3	$22,000.00	$66000.00
0425 1534	INLETS, DITCH BOTTOM, TYPE C MODIFIED- BACK OF SIDEWALK, J BOT, >10'	EA	3	$27,400.00	$82200.00
0425 1535	INLETS, DITCH BOTTOM TYPE C MODIFIED- BACK OF SIDEWALK, PARTIAL	EA	3	$11,000.00	$33000.00
0425 1541	INLETS, DT BOT, TYPE D, <10'	EA	3	$14,000.00	$42000.00
0425 1542	INLETS, DT BOT, TYPE D, >10'	EA	3	$24,000.00	$72000.00
0425 1543	INLETS, DITCH BOTTOM, TYPE D, J BOT, <10'	EA	3	$18,000.00	$54000.00
0425 1544	INLETS, DITCH BOTTOM, TYPE D, J BOT, >10'	EA	3	$28,000.00	$84000.00
0425 1545	INLETS, DITCH BOTTOM, TYPE D, PARTIAL	EA	3	$12,000.00	$36000.00
0425 1549	INLETS, DT BOT, TYPE D, MODIFY	EA	3	$7,500.00	$42000.00
0425 1551	INLETS, DT BOT, TYPE E, <10'	EA	3	$14,000.00	$66000.00
0425 1552	INLETS, DT BOT, TYPE E, >10'	EA	3	$22,000.00	$66000.00
0425 1553	INLETS, DT BOT, TYPE E, J BOT, <10'	EA	3	$18,000.00	$54000.00
0425 1554	INLETS, DT BOT, TYPE E, J BOT, >10'	EA	3	$24,000.00	$72000.00
0425 1555	INLETS, DT BOT, TYPE E, PARTIAL	EA	3	$7,500.00	$22500.00
0425 1559	INLETS, DT BOT, TYPE E, MODIFY	EA	3	$5,500.00	$16500.00
0425 1561	INLETS, DT BOT, TYPE F, <10'	EA	3	$14,000.00	$42000.00
0425 1562	INLETS, DT BOT, TYPE F, >10'	EA	3	$22,000.00	$66000.00
0425 1563	INLETS, DITCH BOTTOM, TYPE F, J BOT, <10'	EA	3	$18,000.00	$54000.00

0425 1564	INLETS, DITCH BOTTOM, TYPE F, J BOT, >10'	EA	3	$24,000.00	$72000.00
0425 1565	INLETS, DITCH BOTTOM, TYPE F, PARTIAL	EA	3	$7,500.00	$22500.00
0425 1569	INLETS, DITCH BOTTOM, TYPE F, MODIFY	EA	3	$5,500.00	$16500.00
0425 1571	INLETS, DITCH BOTTOM, TYPE G, <10'	EA	3	$14,000.00	$42000.00
0425 1572	INLETS, DITCH BOTTOM, TYPE G, >10'	EA	3	$22,000.00	$66000.00
0425 1573	INLETS, DITCH BOTTOM, TYPE G, J BOT, <10'	EA	3	$18,000.00	$54000.00
0425 1574	INLETS, DITCH BOTTOM, TYPE G, J BOT, >10'	EA	3	$24,000.00	$72000.00
0425 1575	INLETS, DITCH BOTTOM, TYPE G, PARTIAL	EA	3	$7,500.00	$22500.00
0425 1579	INLETS, DITCH BOTTOM, TYPE G, MODIFY	EA	3	$5,500.00	$16500.00
0425 1581	INLETS, DT BOT, TYPE H, <10'	EA	3	$20,000.00	$60000.00
0425 1582	INLETS, DT BOT, TYPE H, >10'	EA	3	$35,000.00	$105000.00
0425 1583	INLETS, DT BOT, TYPE H, J BOTTOM <10'	EA	3	$24,000.00	$72000.00
0425 1584	INLETS, DT BOT, TYPE H, J BOTTOM >10'	EA	3	$39,000.00	$117000.00
0425 1585	INLETS, DT BOT, TYPE H, PARTIAL	EA	3	$15,000.00	$45000.00
0425 1589	INLETS, DT BOT, TYPE H, MODIFY	EA	3	$11,000.00	$33000.00
0425 1601	INLETS, DT BOT, TYPE J, <10'	EA	3	$25,000.00	$75000.00
0425 1602	INLETS, DT BOT, TYPE J, >10'	EA	3	$45,000.00	$135000.00
0425 1603	INLETS, DT BOT, TYPE J, J BOT, <10'	EA	3	$30,000.00	$90000.00
0425 1604	INLETS, DT BOT, TYPE J, JBOT,>10'	EA	3	$50,000.00	$150000.00
0425 1605	INLETS, DT BOT, TYPE J, PARTIAL	EA	3	$12,000.00	$36000.00
0425 1609	INLETS, DT BOT, TYPE J, MODIFY	EA	3	$11,000.00	$33000.00
0425 1611	INLETS, DITCH BOTTOM, TYPE K, <10'	EA	3	$25,000.00	$75000.00
0425 1619	INLETS, DITCH BOTTOM, TYPE K, J BOTTOM, MODIFY	EA	3	$18,000.00	$54000.00
0425 1701	INLETS, GUTTER, TYPE S, <10'	EA	3	$16,000.00	$48000.00
0425 1702	INLETS, GUTTER, TYPE S, >10'	EA	3	$26,000.00	$78000.00
0425 1703	INLETS, GUTTER, TYPE S, J BOTTOM <10'	EA	3	$20,000.00	$60000.00
0425 1704	INLETS, GUTTER, TYPE S, J BOTTOM, >10'	EA	3	$30,000.00	$90000.00
0425 1705	INLETS, GUTTER, TYPE S, PARTIAL	EA	3	$7,500.00	$22500.00

0425 1711	INLETS, GUTTER, TYPE V, <10'	EA	3	$13,000.00	$39000.00
0425 1712	INLETS, GUTTER, TYPE V, >10'	EA	3	$26,000.00	$78000.00
0425 1713	INLETS, GUTTER, TYPE V, J BOT, <10'	EA	3	$18,000.00	$54000.00
0425 1714	INLETS, GUTTER, TYPE V, J BOTTOM, >10'	EA	3	$28,000.00	$84000.00
0425 1715	INLETS, GUTTER, TYPE V, PARTIAL	EA	3	$7,500.00	$22500.00
0425 1719	INLETS, GUTTER, TYPE V, MODIFY	EA	3	$5,500.00	$16500.00
0425 1910	INLETS, CLOSED FLUME	EA	3	$12,500.00	$37500.00
0425 2 41	MANHOLES, P-7, <10'	EA	3	$10,000.00	$30000.00
0425 2 42	MANHOLES, P-7, >10'	EA	3	$17,000.00	$51000.00
0425 2 43	MANHOLES, P-7, PARTIAL	EA	3	$5,500.00	$16500.00
0425 2 61	MANHOLES, P-8, <10'	EA	3	$12,000.00	$36000.00
0425 2 62	MANHOLES, P-8, >10'	EA	3	$22,000.00	$66000.00
0425 2 63	MANHOLES, P-8, PARTIAL	EA	3	$7,500.00	$22500.00
0425 2 71	MANHOLES, J-7, <10'	EA	3	$19,000.00	$57000.00
0425 2 72	MANHOLES, J-7, >10'	EA	3	$32,000.00	$96000.00
0425 2 73	MANHOLES, J-7, PARTIAL	EA	3	$11,000.00	$33000.00
0425 2 91	MANHOLES, J-8, <10'	EA	3	$19,000.00	$57000.00
0425 2 92	MANHOLES, J-8, >10'	EA	3	$32,000.00	$96000.00
0425 2 93	MANHOLES, J-8, PARTIAL	EA	3	$7,500.00	$22500.00
0425 2110	MANHOLES, REPAIR	EA	3	$6,750.00	$20250.00
0425 3 41	JUNCTION BOX, DRAINAGE, P-7, <10'	EA	3	$15,000.00	$45000.00
0425 3 42	JUNCTION BOXES, P-7, >10'	EA	3	$17,000.00	$51000.00
0425 3 43	JUNCTION BOX, DRAINAGE, P-7, PARTIAL	EA	3	$4,350.00	$13050.00
0425 3 50	JUNCTION BOX, DRAINAGE, REPAIR	EA	3	$3,850.00	$11550.00
0425 3 61	JUNCTION BOXES, J-7, <10'	EA	3	$15,000.00	$45000.00
0425 3 62	JUNCTION BOXES, J-7, >10'	EA	3	$18,000.00	$54000.00
0425 3 63	JUNCTION BOXES, DRAINAGE, J-7, PARTIAL	EA	3	$6,550.00	$19650.00
0425 4	INLETS, ADJUST	EA	3	$1,750.00	$5250.00

0425 5	MANHOLE, ADJUST	EA	3	$1,750.00	$5250.00
0425 6	VALVE BOXES, ADJUST	EA	3	$950.00	$2850.00
0425 7	MANHOLE COVER- REPLACE	EA	3	$850.00	$2550.00
0425 8	DRAINAGE STRUCTURES, MISCELLANEOUS, ADJUST	EA	3	$1,750.00	$5250.00
0425 11	MODIFY EXISTING DRAINAGE STRUCTURE	EA	3	$4,500.00	$13500.00
0425 14 1	GRATE FOR EXISTING DRAINAGE STRUCTURE, FURNISH AND INSTALL	SF	3	$5,200.00	$15600.00
0425 15 41	INLET TOP, REPAIR, CURB INLET	EA	3	$7,500.00	$22500.00
0425 15 42	INLET TOP, REPAIR, DITCH BOTTOM INLET	EA	3	$8,500.00	$25500.00
0425 15 51	INLET TOP, REPLACE, CURB INLET	EA	3	$7,750.00	$23250.00
0425 15 52	INLET TOP, REPLACE, DITCH BOTTOM INLET	EA	3	$7,750.00	$23250.00
0425 16 11	DRAINAGE MANHOLE- REPLACE TOP AND RIM	EA	3	$7,500.00	$22500.00
0425 82	REPLACE GRATE	EA	3	$1,250.00	$3750.00
0430 94 1	DESILTING PIPE, 0 - 24"	LF	50	$75.00	$3750.00
0430 94 2	DESILTING PIPE, 25 - 36"	LF	50	$115.00	$5750.00
430173112	PIPE CULVERT OPTIONAL MATERIAL, ROUND, 12", GUTTER DRAIN	LF	50	$400.00	$20000.00
430173115	PIPE CULVERT OPTIONAL MATERIAL, ROUND, 15", GUTTER DRAIN	LF	50	$540.00	$27000.00
430173118	PIPE CULVERT OPTIONAL MATERIAL, ROUND, 18", GUTTER DRAIN	LF	50	$750.00	$37500.00
430173124	PIPE CULVERT OPTIONAL MATERIAL, ROUND, 24", GUTTER DRAIN	LF	50	$800.00	$40000.00
430173130	PIPE CULVERT OPTIONAL MATERIAL, ROUND, 30", GUTTER DRAIN	LF	50	$950.00	$47500.00
430173136	PIPE CULVERT OPTIONAL MATERIAL, ROUND, 36", GUTTER DRAIN	LF	50	$1,250.00	$62500.00
430173142	PIPE CULVERT, OPTIONAL MATERIAL, ROUND, 42", GUTTER DRAIN	LF	50	$1,700.00	$85000.00
430173148	PIPE CULVERT, OPTIONAL MATERIAL, ROUND, 48" GUTTER DRAIN	LF	50	$1,800.00	$90000.00
430173218	PIPE CULVERT OPTIONAL MATERIAL, OTHER/ELLIPTICAL, 18", GUTTER DRAIN	LF	50	$800.00	$40000.00
430174112	PIPE CULVERT, OPTIONAL MATERIAL, ROUND, 12"SD	LF	50	$170.00	$8500.00
430174115	PIPE CULVERT, OPTIONAL MATERIAL, ROUND, 15"SD	LF	50	$190.00	$9500.00
430174118	PIPE CULVERT, OPTIONAL MATERIAL, ROUND, 18"SD	LF	50	$220.00	$11000.00
430174124	PIPE CULVERT, OPTIONAL MATERIAL, ROUND, 24"SD	LF	50	$290.00	$14500.00
430174130	PIPE CULVERT, OPTIONAL MATERIAL, ROUND, 30"SD	LF	50	$330.00	$16500.00

430174142	PIPE CULVERT, OPTIONAL MATERIAL, ROUND, 42"SD	LF	50	$490.00	$24500.00
430174148	PIPE CULVERT, OPTIONAL MATERIAL, ROUND, 48"SD	LF	50	$610.00	$30500.00
430174154	PIPE CULVERT, OPTIONAL MATERIAL, ROUND, 54"SD	LF	50	$640.00	$32000.00
430174160	PIPE CULVERT, OPTIONAL MATERIAL, ROUND, 60"SD	LF	50	$1,110.00	$55500.00
430174172	PIPE CULVERT, OPTIONAL MATERIAL, ROUND, 72"SD	LF	50	$1,410.00	$70500.00
430174215	PIPE CULVERT, OPTIONAL MATERIAL, OTHER SHAPE - ELLIP/ARCH, 15"SD	LF	50	$210.00	$10500.00
430174218	PIPE CULVERT, OPTIONAL MATERIAL, OTHER SHAPE - ELLIP/ARCH, 18"SD	LF	50	$220.00	$11000.00
430174224	PIPE CULVERT, OPTIONAL MATERIAL, OTHER SHAPE - ELLIP/ARCH, 24"SD	LF	50	$230.00	$11500.00
430174230	PIPE CULVERT, OPTIONAL MATERIAL, OTHER SHAPE - ELLIP/ARCH, 30"SD	LF	50	$280.00	$14000.00
430174236	PIPE CULVERT, OPTIONAL MATERIAL, OTHER SHAPE - ELLIP/ARCH, 36"SD	LF	50	$335.00	$16750.00
430174242	PIPE CULVERT, OPTIONAL MATERIAL, ELLIP/OTHER, 42"SD	LF	50	$430.00	$21500.00
430174248	PIPE CULVERT,OPTIONAL MATERIAL,OTHER-ELIP/ARCH, 48"SD	LF	50	$465.00	$23250.00
430175112	PIPE CULVERT,OPTIONAL MATERIAL,ROUND, 12"S/CD	LF	50	$170.00	$8500.00
430175115	PIPE CULVERT,OPTIONAL MATERIAL,ROUND, 15"S/CD	LF	50	$190.00	$9500.00
430175118	PIPE CULVERT, OPTIONAL MATERIAL, ROUND, 18"S/CD	LF	250	$285.00	$71250.00
430175124	PIPE CULVERT, OPTIONAL MATERIAL, ROUND, 24"S/CD	LF	50	$325.00	$16250.00
430175130	PIPE CULVERT, OPT MATERIAL, ROUND, 30"S/CD	LF	50	$430.00	$21500.00
430175136	PIPE CULVERT, OPT MATERIAL, ROUND, 36"S/CD	LF	50	$485.00	$24250.00
430175140	PIPE CULVERT, OPT MATERIAL, ROUND, 40"S/CD	LF	50	$620.00	$31000.00
430175142	PIPE CULVERT, OPT MATERIAL, ROUND, 42"S/CD	LF	50	$690.00	$34500.00
430175148	PIPE CULVERT, OPT MATERIAL, ROUND, 48"S/CD	LF	50	$810.00	$40500.00
430175154	PIPE CULVERT, OPT MATERIAL, ROUND, 54"S/CD	LF	50	$910.00	$45500.00
430175160	PIPE CULVERT, OPT MATERIAL, ROUND, 60"S/CD	LF	50	$1,100.00	$55000.00
430175166	PIPE CULVERT, OPT MATERIAL, ROUND, 66"S/CD	LF	50	$1,450.00	$72500.00
430175172	PIPE CULVERT, OPT MATERIAL, ROUND, 72"S/CD	LF	50	$1,850.00	$92500.00
430175178	PIPE CULVERT, OPT MATERIAL, ROUND, 78" STORM/CROSS DRAIN	LF	50	$1,920.00	$96000.00
430175184	PIPE CULVERT, OPT MATERIAL, ROUND, 84"S/CD	LF	50	$2,080.00	$104000.00
430175196	PIPE CULVERT, OPT MATERIAL, ROUND, 96"S/CD	LF	50	$2,210.00	$110500.00

430175215	PIPE CULVERT,OPTIONAL MATERIAL,OTHER-ELIP/ARCH, 15"S/CD	LF	50	$175.00	$8750.00
430175218	PIPE CULVERT,OPTIONAL MATERIAL,OTHER-ELIP/ARCH, 18"S/CD	LF	50	$195.00	$9750.00
430175224	PIPE CULVERT,OPTIONAL MATERIAL,OTHER SHAPE-ELIP/ARCH, 24"S/CD	LF	50	$220.00	$11000.00
430175230	PIPE CULVERT, OPT MATERIAL, OTHER SHAPE - ELIP/ARCH, 30"S/CD	LF	50	$275.00	$13750.00
430175236	PIPE CULVERT, OPT MATERIAL, OTHER SHAPE - ELIP/ARCH, 36"S/CD	LF	50	$385.00	$19250.00
430175242	PIPE CULVERT, OPT MATERIAL, OTHER SHAPE - ELIP/ARCH, 42"S/CD	LF	50	$430.00	$21500.00
430175248	PIPE CULVERT, OPT MATERIAL, OTHER SHAPE - ELIP/ARCH, 48"S/CD	LF	50	$455.00	$22750.00
430175254	PIPE CULVERT, OPT MATERIAL, OTHER SHAPE - ELIP/ARCH, 54"S/CD	LF	50	$475.00	$23750.00
430175260	PIPE CULVERT, OPT MATERIAL, OTHER SHAPE - ELIP/ARCH, 60"S/CD	LF	50	$585.00	$29250.00
430175266	PIPE CULVERT, OPT MATERIAL, OTHER SHAPE - ELIP/ARCH, 66"S/CD	LF	50	$715.00	$35750.00
430175272	PIPE CULVERT, OPT MATERIAL, OTHER SHAPE - ELIP/ARCH, 72"S/CD	LF	50	$900.00	$45000.00
430175299	PIPE CULVERT,OPTIONAL MATERIAL,OTHER SHAPE-ELIP/ARCH, 99" OR >, S/CD	LF	50	$1,420.00	$71000.00
430185118	PIPE CULVERT,OPTIONAL MATERIAL,ROUND, JACK & BORE, 18" , STORM AND CROSS DRAIN	LF	50	$1,900.00	$95000.00
430185124	PIPE CULVERT,OPTIONAL MATERIAL,ROUND, JACK & BORE, 24", STORM AND CROSS DRAIN	LF	50	$3,000.00	$150000.00
430185130	PIPE CULVERT,OPTIONAL MATERIAL,ROUND, JACK & BORE, 30", STORM AND CROSS DRAIN	LF	50	$6,400.00	$320000.00
430185136	PIPE CULVERT,OPTIONAL MATERIAL,ROUND, JACK & BORE, 36", STORM AND CROSS DRAIN	LF	50	$6,500.00	$325000.00
430185142	PIPE CULVERT,OPTIONAL MATERIAL,ROUND, JACK & BORE, 42", STORM AND CROSS DRAIN	LF	50	$9,000.00	$450000.00
430185148	PIPE CULVERT,OPTIONAL MATERIAL,ROUND, JACK & BORE, 48", STORM AND CROSS DRAIN	LF	50	$11,000.00	$550000.00
430185154	PIPE CULVERT,OPTIONAL MATERIAL,ROUND, JACK & BORE, 54", STORM AND CROSS DRAIN	LF	50	$12,000.00	$600000.00
430185160	PIPE CULVERT,OPTIONAL MATERIAL,ROUND, JACK & BORE, 60" , STORM AND CROSS DRAIN	LF	50	$13,000.00	$650000.00
430185166	PIPE CULVERT,OPTIONAL MATERIAL,ROUND, JACK & BORE, 66" , STORM AND CROSS DRAIN	LF	50	$15,000.00	$750000.00
430185178	PIPE CULVERT,OPTIONAL MATERIAL,ROUND, JACK & BORE, 78" , STORM AND CROSS DRAIN	LF	50	$17,500.00	$875000.00
0430200 21	FLARED END SECTION, CONCRETE, 12"	EA	3	$4,500.00	$13500.00
0430200 23	FLARED END SECTION, CONCRETE, 15"	EA	3	$5,000.00	$15000.00
0430200 25	FLARED END SECTION, CONCRETE, 18"	EA	3	$5,500.00	$16500.00
0430200 29	FLARED END SECTION, CONCRETE, 24"	EA	3	$6,000.00	$18000.00
0430200 33	FLARED END SECTION, CONCRETE, 30"	EA	3	$7,500.00	$22500.00
0430200 38	FLARED END SECTION, CONCRETE, 36"	EA	3	$9,000.00	$27000.00

0430200 40	FLARED END SECTION, CONCRETE, 42"	EA	3	$15,000.00	$45000.00
0430200 41	FLARED END SECTION, CONCRETE, 48"	EA	3	$17,500.00	$52500.00
0430200 42	FLARED END SECTION, CONCRETE, 54"	EA	3	$20,000.00	$60000.00
0430200 43	FLARED END SECTION, CONCRETE, 60"	EA	3	$25,000.00	$75000.00
0430200 44	FLARED END SECTION, CONCRETE, 66"	EA	3	$35,000.00	$105000.00
0430200 45	FLARED END SECTION, CONCRETE, 72"	EA	3	$40,000.00	$120000.00
430600025	U-ENDWALL, STD 260, 1:6 SLOPE, 18"PIPE	EA	3	$5,500.00	$16500.00
430600125	U-ENDWALL, STD 260, 1:4 SLOPE, 18"PIPE	EA	3	$6,000.00	$18000.00
430602123	U-ENDWALL, WITH GRATE,STD INDEX 260, 1:4 SLOPE, 15"	EA	3	$6,500.00	$19500.00
430602125	U-ENDWALL, WITH GRATE,STD 260, 1:4 SLOPE, 18"	EA	3	$6,500.00	$19500.00
430602129	U-ENDWALL, WITH GRATE,STD 260, 1:4 SLOPE, 24"	EA	3	$8,000.00	$24000.00
430602133	U-ENDWALL, WITH GRATE,STD INDEX 260, 1:4 SLOPE, 30"	EA	3	$9,000.00	$27000.00
430610025	U-ENDWALL, STD 261, 1:6 SLOPE, 18"PIPE	EA	3	$6,500.00	$19500.00
430610029	U-ENDWALL, STD 261, 1:6 SLOPE, 24"PIPE	EA	3	$7,500.00	$22500.00
430610033	U-ENDWALL, STD 261, 1:6 SLOPE, 30"PIPE	EA	3	$9,500.00	$28500.00
430610123	U-ENDWALL, STD 261, 1:4 SLOPE, 15"PIPE	EA	3	$6,500.00	$19500.00
430610125	U-ENDWALL, STD 261, 1:4 SLOPE, 18"PIPE	EA	3	$7,000.00	$21000.00
430610129	U-ENDWALL, STD 261, 1:4 SLOPE, 24"PIPE	EA	3	$8,000.00	$24000.00
430610133	U-ENDWALL, STD 261, 1:4 SLOPE, 30"PIPE	EA	3	$10,000.00	$30000.00
430610223	U-ENDWALL, STD 261, 1:3 SLOPE, 15"PIPE	EA	3	$6,500.00	$19500.00
430610225	U-ENDWALL, STD 261, 1:3 SLOPE, 18"PIPE	EA	3	$7,500.00	$22500.00
430610229	U-ENDWALL, STD 261, 1:3 SLOPE, 24"PIPE	EA	3	$9,000.00	$27000.00
430610233	U-ENDWALL, STD 261, 1:3 SLOPE, 30"PIPE	EA	3	$10,000.00	$30000.00
430610323	U-ENDWALL, STD 261, 1:2 SLOPE, 15"PIPE	EA	3	$8,000.00	$24000.00
430610325	U-ENDWALL, STD 261, 1:2 SLOPE, 18"PIPE	EA	3	$9,000.00	$27000.00
430610329	U-ENDWALL, STD 261,1:2 SLOPE, 24"PIPE	EA	3	$10,000.00	$30000.00
430611023	U-ENDWALL, STD 261, BAFFLES, 1:6 SLOPE, 15"PIPE	EA	3	$8,500.00	$25500.00
430611025	U-ENDWALL, STD 261, BAFFLES, 1:6 SLOPE, 18"PIPE	EA	3	$9,500.00	$28500.00

430611029	U-ENDWALL, STD 261, BAFFLES, 1:6 SLOPE, 24"PIPE	EA	3	$10,500.00	$31500.00
430611033	U-ENDWALL, STD 261, BAFFLES, 1:6 SLOPE, 30"PIPE	EA	3	$13,000.00	$39000.00
430611123	U-ENDWALL WITH BAFFLES, STD 261, 1:4 SLOPE, 15"PIPE	EA	3	$8,500.00	$25500.00
430611125	U-ENDWALL WITH BAFFLES, STD 261, 1:4 SLOPE, 18"PIPE	EA	3	$9,500.00	$28500.00
430611129	U-ENDWALL WITH BAFFLES, STD 261, 1:4 SLOPE, 24"PIPE	EA	3	$10,500.00	$31500.00
430611133	U-ENDWALL WITH BAFFLES,STD 261,1:4 SLOPE,30"PIPE	EA	3	$14,000.00	$42000.00
430611223	U-ENDWALL WITH BAFFLES, STD 261, 1:3 SLOPE, 15"PIPE	EA	3	$8,500.00	$25500.00
430611225	U-ENDWALL WITH BAFFLES, STD 261, 1:3 SLOPE, 18"PIPE	EA	3	$9,500.00	$28500.00
430611229	U-ENDWALL WITH BAFFLES, STD 261, 1:3 SLOPE, 24"PIPE	EA	3	$10,500.00	$31500.00
430611233	U-ENDWALL, STD 261, BAFFLES, 1:3 SLOPE, 30"PIPE	EA	3	$14,000.00	$42000.00
430611323	U-ENDWALL WITH BAFFLES, STD 261, 1:2 SLOPE, 15"PIPE	EA	3	$8,500.00	$25500.00
430611325	U-ENDWALL WITH BAFFLES, STD 261, 1:2 SLOPE, 18"PIPE	EA	3	$9,500.00	$28500.00
430611329	U-ENDWALL WITH BAFFLES, STD 261, 1:2 SLOPE, 24"PIPE	EA	3	$10,500.00	$31500.00
430611333	U-ENDWALL, BAFFLES, STD 261, 1:2 SLOPE, 30"PIPE	EA	3	$14,000.00	$42000.00
430612023	U-ENDWALL WITH GRATE, STD 261, 1:6 SLOPE, 15"	EA	3	$8,500.00	$25500.00
430612025	U-ENDWALL WITH GRATE, STD 261, 1:6 SLOPE, 18"PIPE	EA	3	$9,500.00	$28500.00
430612029	U-ENDWALL WITH GRATE, STD 261, 1:6 SLOPE, 24"PIPE	EA	3	$10,500.00	$31500.00
430612033	U-ENDWALL WITH GRATE, STD 261, 1:6 SLOPE, 30"	EA	3	$14,000.00	$42000.00
430612125	U-ENDWALL WITH GRATE, STD 261, 1:4 SLOPE, 18"PIPE	EA	3	$11,000.00	$33000.00
430612129	U-ENDWALL WITH GRATE, STD 261, 1:4 SLOPE, 24"PIPE	EA	3	$13,000.00	$39000.00
430612133	U-ENDWALL, GRATE, STD 261, 1:4 SLOPE, 30" PIPE	EA	3	$15,000.00	$45000.00
430612329	U-ENDWALL WITH GRATE, STD 261, 1:2 SLOPE, 24"PIPE	EA	3	$14,000.00	$42000.00
430612333	U-ENDWALL, GRATE, STD 261, 1:2 SLOPE, 30" PIPE	EA	3	$19,600.00	$58800.00
430613025	U-ENDWALL, WITH BAFFLES & GRATE, STD 261,1:6 SLOPE, 18"	EA	3	$11,000.00	$33000.00
430613029	U-ENDWALL, WITH BAFFLES & GRATE, STD 261,1:6 SLOPE, 24"PIPE	EA	3	$14,000.00	$42000.00
430613033	U-ENDWALL, WITH BAFFLES & GRATE, STD 261,1:6 SLOPE, 30"	EA	3	$18,000.00	$54000.00
430613123	U-ENDWALL, WITH BAFFLES & GRATE, STD 261,1:4 SLOPE,15"PIPE	EA	3	$9,000.00	$27000.00
430613125	U-ENDWALL, WITH BAFFLES & GRATE, STD 261,1:4 SLOPE,18"PIPE	EA	3	$10,000.00	$30000.00

430613129	U-ENDWALL, WITH BAFFLES & GRATE, STD 261,1:4 SLOPE, 24"PIPE	EA	3	$13,000.00	$39000.00
430613133	U-ENDWALL, WITH BAFFLES & GRATE, STD 261,1:4 SLOPE,30"PIPE	EA	3	$14,000.00	$42000.00
430613225	U-ENDWALL, WITH BAFFLES & GRATE, STD 261,1:3 SLOPE,18"PIPE	EA	3	$13,000.00	$39000.00
430613229	U-ENDWALL, WITH BAFFLES & GRATE, STD 261,1:3 SLOPE, 24 "PIPE	EA	3	$15,000.00	$45000.00
430613233	U-ENDWALL, WITH BAFFLES & GRATE, STD 261,1:3 SLOPE,30"PIPE	EA	3	$16,000.00	$48000.00
430613325	U-ENDWALL, WITH BAFFLES & GRATE, STD 261,1:2 SLOPE,18"PIPE	EA	3	$13,000.00	$39000.00
430613333	U-ENDWALL, WITH BAFFLES & GRATE, STD 261,1:2 SLOPE,30"PIPE	EA	3	$16,000.00	$48000.00
430830	PIPE FILLING AND PLUGGING- PLACE OUT OF SERVICE	CY	20	$250.00	$5000.00
430950	DESILTING CONCRETE BOX CULVERT	CY	20	$200.00	$4000.00
0430963 1	PVC PIPE FOR BACK OF SIDEWALK, 4"	LF	50	$70.00	$3500.00
430982120	MITERED END SECTION, OPTIONAL ROUND, 8" CD	EA	3	$670.00	$2010.00
430982121	MITERED END SECTION, OPTIONAL ROUND, 12" CD	EA	3	$880.00	$2640.00
430982123	MITERED END SECTION, OPTIONAL ROUND, 15" CD	EA	3	$1,070.00	$3210.00
430982125	MITERED END SECTION, OPTIONAL ROUND, 18" CD	EA	3	$1,625.00	$4875.00
430982129	MITERED END SECTION, OPTIONAL ROUND, 24" CD	EA	3	$2,675.00	$8025.00
430982133	MITERED END SECTION, OPTIONAL ROUND, 30" CD	EA	3	$5,300.00	$15900.00
430982138	MITERED END SECTION, OPTIONAL ROUND, 36" CD	EA	3	$7,400.00	$22200.00
430982140	MITERED END SECTION, OPTIONAL ROUND, 42" CD	EA	3	$10,025.00	$30075.00
430982141	MITERED END SECTION, OPTIONAL ROUND, 48" CD	EA	3	$10,750.00	$32250.00
430982142	MITERED END SECTION, OPTIONAL ROUND, 54" CD	EA	3	$10,750.00	$32250.00
430982143	MITERED END SECTION, OPTIONAL ROUND, 60" CD	EA	3	$10,750.00	$32250.00
430982144	MITERED END SECTION, OPTIONAL ROUND, 66" CD	EA	3	$13,050.00	$39150.00
430982145	MITERED END SECTION, OPTIONAL ROUND, 72" CD	EA	3	$14,550.00	$43650.00
430982147	MITERED END SECTION, OPTIONAL ROUND, 84" CD	EA	3	$16,120.00	$48360.00
430982623	MITERED END SECTION, OPTIONAL - ELLIPTICAL / ARCH, 15" CD	EA	3	$1,625.00	$4875.00
430982625	MITERED END SECTION, OPTIONAL - ELLIPTICAL / ARCH, 18" CD	EA	3	$3,250.00	$9750.00
430982629	MITERED END SECTION, OPTIONAL - ELLIPTICAL / ARCH, 24" CD	EA	3	$4,050.00	$12150.00
430982633	MITERED END SECTION, OPTIONAL - ELLIPTICAL / ARCH, 30" CD	EA	3	$8,975.00	$26925.00

430982638	MITERED END SECTION, OPTIONAL - ELLIPTICAL / ARCH, 36" CD	EA	3	$10,750.00	$32250.00
430982640	MITERED END SECTION, OPTIONAL - ELLIPTICAL / ARCH, 42" CD	EA	3	$11,250.00	$33750.00
430982641	MITERED END SECTION, OPTIONAL - ELLIPTICAL / ARCH, 48" CD	EA	3	$12,450.00	$37350.00
430982642	MITERED END SECTION, OPTIONAL - ELLIPTICAL / ARCH, 54" CD	EA	3	$13,850.00	$41550.00
430982643	MITERED END SECTION, OPTIONAL - ELLIPTICAL / ARCH, 60" CD	EA	3	$14,450.00	$43350.00
430982645	MITERED END SECTION, OPTIONAL - ELLIPTICAL / ARCH, 72" CD	EA	3	$15,150.00	$45450.00
430984120	MITERED END SECTION, OPTIONAL ROUND, 8" SD	EA	3	$650.00	$1950.00
430984121	MITERED END SECTION, OPTIONAL ROUND, 12" SD	EA	3	$870.00	$2610.00
430984123	MITERED END SECTION, OPTIONAL ROUND, 15" SD	EA	3	$1,080.00	$3240.00
430984125	MITERED END SECTION, OPTIONAL ROUND, 18" SD	EA	3	$1,625.00	$4875.00
430984129	MITERED END SECTION, OPTIONAL ROUND, 24" SD	EA	3	$2,675.00	$8025.00
430984133	MITERED END SECTION , OPTIONAL ROUND, 30" SD	EA	3	$5,350.00	$16050.00
430984138	MITERED END SECTION , OPTIONAL ROUND, 36" SIDE DRAIN	EA	3	$7,450.00	$22350.00
430984140	MITERED END SECTION , OPTIONAL ROUND, 42" SD	EA	3	$10,250.00	$30750.00
430984141	MITERED END SECTION , OPTIONAL ROUND, 48" SD	EA	3	$10,750.00	$32250.00
430984142	MITERED END SECTION , OPTIONAL ROUND, 54" SD	EA	3	$11,250.00	$33750.00
430984143	MITERED END SECTION , OPTIONAL ROUND, 60" SD	EA	3	$11,800.00	$35400.00
430984144	MITERED END SECTION, OPTIONAL ROUND, 66" SIDE DRAIN	EA	3	$13,250.00	$39750.00
430984145	MITERED END SECTION, OPTIONAL ROUND, 72" SIDE DRAIN	EA	3	$14,150.00	$42450.00
430984147	MITERED END SECTION, OPTIONAL ROUND, 84" SD	EA	3	$15,850.00	$47550.00
430984623	MITERED END SECTION, OPTIONAL OTHER - ELLIP/ARCH, 15" SD	EA	3	$940.00	$2820.00
430984625	MITERED END SECT, OPTIONAL - ELLIPTICAL / ARCH, 18" SD	EA	3	$1,070.00	$3210.00
430984629	MITERED END SECT, OPTIONAL - ELLIPTICAL / ARCH, 24" SD	EA	3	$1,625.00	$4875.00
430984633	MITERED END SECT, OPTIONAL /ELLIP/ARCH, 30" SD	EA	3	$3,275.00	$9825.00
430984638	MITERED END SECT, OPTIONAL /ELLIP/ARCH, 36" SD	EA	3	$4,025.00	$12075.00
430984640	MITERED END SECT, OPTIONAL /ELLIP/ARCH, 42" SD	EA	3	$9,325.00	$27975.00
430984641	MITERED END SECT, OPTIONAL /ELLIP/ARCH, 48" SD	EA	3	$9,750.00	$29250.00
430984642	MITERED END SECT, OPTIONAL /ELLIP/ARCH, 54" SD	EA	3	$10,750.00	$32250.00

430984643	MITERED END SECTION, OPTIONAL SHAPE /ELLIP/ARCH, 60" SIDE DRAIN	EA	3	$11,250.00	$33750.00
430984644	MITERED END SECT, OPTIONAL /ELLIP/ARCH, 66" SD	EA	3	$13,250.00	$39750.00
430984645	MITERED END SECT, OPTIONAL /ELLIP/ARCH, 72" SD	EA	3	$14,750.00	$44250.00
430990	MITERED END SECT, REPLACE GRATE	EA	3	$4,000.00	$12000.00
0431 1 1	PIPE LINER, OPTIONAL MATERIAL, 0-24"	LF	50	$336.00	$16800.00
0431 1 2	PIPE LINER, OPTIONAL MATERIAL, 25-36"	LF	50	$545.00	$27250.00
0431 1 3	PIPE LINER, OPTIONAL MATERIAL, 37-48"	LF	50	$846.00	$42300.00
0431 1 4	PIPE LINER, OPTIONAL MATERIAL, 49 - 60"	LF	50	$1,115.00	$55750.00
0431 1 5	PIPE LINER, OPTIONAL MATERIAL, 61" AND GREATER	LF	50	$1,510.00	$75500.00
0436 1 1	TRENCH DRAIN, STANDARD	LF	50	$250.00	$12500.00
0440 1 10	UNDERDRAIN, TYPE I	LF	50	$115.00	$5750.00
0440 1 20	UNDERDRAIN, TYPE II	LF	50	$115.00	$5750.00
0440 1 30	UNDERDRAIN, TYPE III	LF	50	$115.00	$5750.00
0440 1 50	UNDERDRAIN, TYPE V	LF	50	$115.00	$5750.00
0440 70	UNDERDRAIN INSPECTION BOX	EA	5	$1,250.00	$6250.00
0440 73 1	UNDERDRAIN OUTLET PIPE, 4"	LF	50	$25.00	$1250.00
0440 73 2	UNDERDRAIN OUTLET PIPE, 6"	LF	50	$30.00	$1500.00
0440 73 3	UNDERDRAIN OUTLET PIPE, 8"	LF	50	$38.00	$1900.00
0440 73 4	UNDERDRAIN OUTLET PIPE, 10"	LF	50	$54.00	$2700.00
0440 73 5	UNDERDRAIN OUTLET PIPE, 12"	LF	50	$38.00	$1900.00
0443 70 3	FRENCH DRAIN, 18"	LF	50	$450.00	$22500.00
0443 70 4	FRENCH DRAIN, 24"	LF	50	$800.00	$40000.00
0443 70 5	FRENCH DRAIN, 30"	LF	50	$1,100.00	$55000.00
0443 70 6	FRENCH DRAIN, 36"	LF	50	$1,500.00	$75000.00
0443 70 7	FRENCH DRAIN, 42"	LF	50	$2,200.00	$110000.00
0443 70 8	FRENCH DRAIN, 48"	LF	50	$2,800.00	$140000.00
0443 70 9	FRENCH DRAIN, 54"	LF	50	$3,200.00	$160000.00
0443 70 10	FRENCH DRAIN, 60"	LF	50	$3,700.00	$185000.00

0443 72 10	FRENCH DRAIN- AGGREGATE WITHOUT PIPE, 0-0.9' DEPTH	SY	10	$75.00	$750.00
0443 72 11	FRENCH DRAIN- AGGREGATE WITHOUT PIPE, 1-1.9' DEPTH	SY	10	$75.00	$750.00
0443 72 12	FRENCH DRAIN- AGGREGATE WITHOUT PIPE, 2-2.9' DEPTH	SY	10	$85.00	$850.00
0443 72 13	FRENCH DRAIN- AGGREGATE WITHOUT PIPE, 3-3.9' DEPTH	SY	10	$85.00	$850.00
0443 72 14	FRENCH DRAIN- AGGREGATE WITHOUT PIPE, 4-4.9' DEPTH	SY	10	$95.00	$950.00
0446 1 1	EDGEDRAIN DRAINCRETE, STANDARD	LF	50	$115.00	$5750.00
0446 71 1	EDGEDRAIN OUTLET PIPE, 4"	LF	50	$50.00	$2500.00
0515 1 1	PIPE HANDRAIL - GUIDERAIL, STEEL	LF	50	$370.00	$18500.00
0515 1 2	PIPE HANDRAIL - GUIDERAIL, ALUMINUM	LF	50	$130.00	$6500.00
0515 1 41	PIPE HANDRAIL - GUIDERAIL, RELOCATE, STEEL	LF	50	$90.00	$4500.00
0515 1 42	PIPE HANDRAIL - GUIDERAIL, RELOCATE, ALUMINUM	LF	50	$60.00	$3000.00
0515 2111	PEDESTRIAN / BICYCLE RAILING, NS, 42" TYPE 1	LF	50	$345.00	$17250.00
0515 2211	PEDESTRIAN / BICYCLE RAILING, STEEL, 42" TYPE 1	LF	50	$600.00	$30000.00
0515 2212	PEDESTRIAN / BICYCLE RAILING, STEEL, 42" TYPE 2	LF	50	$475.00	$23750.00
0515 2213	PEDESTRIAN / BICYCLE RAILING, STEEL, 42" TYPE 3	LF	50	$790.00	$39500.00
0515 2221	PEDESTRIAN/ BICYCLE RAILING, STEEL ONLY,54" TYPE 1	LF	50	$750.00	$37500.00
0515 2231	PEDESTRIAN/ BICYCLE RAILING, STEEL ONLY,48" TYPE 1	LF	50	$675.00	$33750.00
0515 2311	PEDESTRIAN/ BICYCLE RAILING, ALUMINUM ONLY,42" TYPE 1	LF	50	$345.00	$17250.00
0515 2312	PEDESTRIAN / BICYCLE RAILING, ALUMINUM, 42" TYPE 2	LF	50	$275.00	$13750.00
0515 2313	PEDESTRIAN / BICYCLE RAILING, ALUMINUM, 42" TYPE 3	LF	50	$500.00	$25000.00
0515 2321	PEDESTRIAN/ BICYCLE RAILING, ALUMINUM ONLY,54" TYPE 1	LF	50	$415.00	$20750.00
0515 2411	PEDESTRIAN / BICYCLE RAILING, SPECIAL MATERIALS- WEATHERING STEEL, 42" TYPE 1	LF	50	$265.00	$13250.00
0515 2500	PEDESTRIAN / BICYCLE RAILING, RELOCATE	LF	50	$150.00	$7500.00
0519 78	BOLLARDS	EA	10	$950.00	$9500.00
0520 1 7	CONCRETE CURB & GUTTER, TYPE E	LF	1000	$65.00	$65000.00
0520 1 10	CONCRETE CURB & GUTTER, TYPE F	LF	5000	$130.00	$650000.00
0520 1 11	CONCRETE CURB & GUTTER, VARIABLE HEIGHT TYPE F	LF	100	$130.00	$13000.00
0520 1 12	CONCRETE CURB & GUTTER, TYPE F WITH SPECIAL GUTTER PROFILE	LF	100	$150.00	$15000.00

0520 2 1	CONCRETE CURB, TYPE A	LF	100	$45.00	$4500.00
0520 2 2	CONCRETE CURB, TYPE B	LF	1000	$60.00	$60000.00
0520 2 4	CONCRETE CURB, TYPE D	LF	1000	$65.00	$65000.00
0520 3	VALLEY GUTTER- CONCRETE	LF	100	$85.00	$8500.00
0520 5 11	TRAFFIC SEPARATOR CONCRETE - TYPE I, 4' WIDE	LF	50	$150.00	$7500.00
0520 5 12	TRAFFIC SEPARATOR CONCRETE - TYPE I, 6' WIDE	LF	50	$180.00	$9000.00
520 5 16	TRAFFIC SEPARATOR CONCRETE- TYPE I, 8.5' WIDE	LF	50	$190.00	$9500.00
0520 5 21	TRAFFIC SEPARATOR - CONCRETE, TYPE II, 4' WIDE	LF	50	$150.00	$7500.00
0520 5 22	TRAFFIC SEPARATOR - CONCRETE, TYPE II, 6' WIDE	LF	50	$180.00	$9000.00
0520 5 26	TRAFFIC SEPARATOR CONCRETE- TYPE II, 8.5' WIDE	LF	50	$190.00	$9500.00
0520 5 41	TRAFFIC SEPARATOR CONCRETE, TYPE IV, 4' WIDE	LF	50	$150.00	$7500.00
0520 5 42	TRAFFIC SEPARATOR CONCRETE, TYPE IV, 6' WIDE	LF	50	$180.00	$9000.00
0520 5 46	TRAFFIC SEPARATOR CONCRETE, TYPE IV, 8.5' WIDE	LF	50	$190.00	$9500.00
0520 5 51	TRAF SEP CONC, TYPE V, 4' WIDE	LF	50	$175.00	$8750.00
0520 6	SHOULDER GUTTER- CONCRETE	LF	50	$75.00	$3750.00
0520 70	CONCRETE TRAFFIC SEPARATOR, SPECIAL - VARIABLE WIDTH	SY	50	$250.00	$12500.00
0521 72 2	SHOULDER CONCRETE BARRIER WALL, BOX CULVERT	LF	100	$400.00	$40000.00
0521 72 3	SHOULDER CONCRETE BARRIER WALL, RIGID-SHOULDER	LF	100	$450.00	$45000.00
0521 72 4	SHOULDER CONCRETE BARRIER WALL, RIGID RETAINING	LF	100	$450.00	$45000.00
0521 72 5	SHOULDER CONCRETE BARRIER WALL, RIGID-CURB & GUTTER	LF	100	$550.00	$55000.00
0521 72 10	SHOULDER CONCRETE BARRIER WALL, RIGID SHOULDER 42"	LF	100	$550.00	$55000.00
0521 72 11	SHOULDER CONCRETE BARRIER WALL, RIGID SHOULDER 54"	LF	100	$700.00	$70000.00
0521 73	CONCRETE BARRIER WALL, REMOVAL	LF	20	$150.00	$3000.00
0522 1	CONCRETE SIDEWALK AND DRIVEWAY, 4" THICK	SY	3000	$110.00	$330000.00
0522 2	CONCRETE SIDEWALK AND DRIVEWAY, 6" THICK	SY	500	$190.00	$95000.00
0522 3	BUS BOARDING PAD - CONCRETE	SY	50	$200.00	$10000.00
0522 4	BUS SHELTER PAD - CONCRETE	SY	50	$210.00	$10500.00
0524 1 1	CONCRETE DITCH PAVT, NON REINFORCED, 3"	SY	10	$130.00	$1300.00

0524 1 2	CONCRETE DITCH PAVEMENT, NON REINFORCED, 4"	SY	10	$140.00	$1400.00
0524 1 3	CONCRETE DITCH PAVEMENT, NON REINFORCED, 5"	SY	10	$150.00	$1500.00
0524 1 4	CONCRETE DITCH PAVEMENT, NON REINFORCED, 6"	SY	10	$160.00	$1600.00
0524 1 19	CONCRETE DITCH PAVT, 3", REINFORCED	SY	10	$160.00	$1600.00
0524 1 29	CONCRETE DITCH PAVEMENT, 4", REINFORCED	SY	10	$170.00	$1700.00
0524 1 49	CONCRETE DITCH PAVEMENT, 6", REINFORCED	SY	10	$180.00	$1800.00
0524 2 1	CONCRETE SLOPE PAVEMENT,NON REINFORCED, 3"	SY	10	$160.00	$1600.00
0524 2 2	CONCRETE SLOPE PAVEMENT,NON REINFORCED, 4"	SY	10	$170.00	$1700.00
0524 2 4	CONCRETE SLOPE PAVEMENT,NON REINFORCED, 6"	SY	10	$180.00	$1800.00
0524 2 29	CONCRETE SLOPE PAVEMENT, 4", REINFORCED	SY	10	$190.00	$1900.00
0524 2 49	CONCRETE SLOPE PAVEMENT, 6", REINFORCED	SY	10	$200.00	$2000.00
0524 3	CONC CORE DITCH BLOCKS	CY	10	$300.00	$3000.00
0526 1 1	PAVERS, ARCHITECTURAL, ROADWAY	SY	50	$170.00	$8500.00
0526 1 2	PAVERS, ARCHITECTURAL, SIDEWALK	SY	50	$150.00	$7500.00
0527 2	DETECTABLE WARNINGS	SF	1000	$100.00	$100000.00
0530 1	RIPRAP, SAND-CEMENT	CY	50	$1,200.00	$60000.00
0530 3 3	RIPRAP- RUBBLE, BANK AND SHORE	TN	10	$425.00	$4250.00
0530 3 4	RIPRAP, RUBBLE, F&I, DITCH LINING	TN	10	$350.00	$3500.00
0530 3 5	RIPRAP- RUBBLE, COASTAL SHORE- LARGE BOULDERS	TN	10	$650.00	$6500.00
0530 74	BEDDING STONE	TN	10	$75.00	$750.00
0536 1 0	GUARDRAIL -ROADWAY, GENERAL TL-2	LF	250	$25.00	$6250.00
0536 1 1	GUARDRAIL -ROADWAY, GENERAL TL-3	LF	250	$40.00	$10000.00
0536 1 3	GUARDRAIL ROADWAY, DOUBLE FACE	LF	250	$50.00	$12500.00
0536 1 11	GUARDRAIL, ROADWAY, MODIFIED THRIE BEAM	LF	250	$125.00	$31250.00
0536 1 12	GUARDRAIL ROADWAY, MODIFIED THRIE BEAM-DOUBLE FACE	LF	250	$170.00	$42500.00
0536 5 1	RUB RAIL FOR GUARDRAIL, SINGLE SIDED	LF	250	$25.00	$6250.00
0536 5 2	RUB RAIL FOR GUARDRAIL, DOUBLE SIDED	LF	250	$45.00	$11250.00
0536 7 1	SPECIAL GUARDRAIL POST- DEEP POST FOR SLOPE BREAK CONDITION-TIMBER OR STEEL	EA	5	$250.00	$1250.00

0536 7 2	SPECIAL GUARDRAIL POST- SPECIAL STEEL POST FOR CONCRETE STRUCTURE MOUNT	EA	5	$625.00	$3125.00
0536 7 3	SPECIAL GUARDRAIL POST- ENCASED POST FOR SHALLOW MOUNT	EA	5	$150.00	$750.00
0536 7 4	SPECIAL GUARDRAIL POST- FRANGIBLE LEAVE-OUT FOR MOUNTING THROUGH CONCRETE SURFACE	EA	5	$250.00	$1250.00
0536 8 11	APPROACH TRANSITION TO RIGID BARRIER- BRIDGE ANCHORAGE ASSEMBLY CONNECTION, FURNISH & INSTALL	EA	5	$3,800.00	$19000.00
0536 8 12	APPROACH TRANSITION CONNECTION TO RIGID BARRIER, FURNISH AND INSTALL, TL-2	EA	5	$2,400.00	$12000.00
0536 8 13	APPROACH TRANSITION CONNECTION TO RIGID BARRIER, FURNISH AND INSTALL, TL-3	EA	5	$3,900.00	$19500.00
0536 8 40	APPROACH TRANSITION TO RIGID BARRIER- BRIDGE ANCHORAGE ASSEMBLY, RELOCATE	EA	5	$975.00	$4875.00
0536 8 60	APPROACH TRANSITION TO RIGID BARRIER- BRIDGE ANCHORAGE ASSEMBLY, REMOVE	EA	5	$295.00	$1475.00
0536 73	GUARDRAIL REMOVAL	LF	25	$12.00	$300.00
0536 85 22	GUARDRAIL END ANCHORAGE ASSEMBLY/END TREATMENT- FLARED	EA	2	$3,600.00	$7200.00
0536 85 24	GUARDRAIL END ANCHORAGE ASSEMBLY/END TREATMENT- PARALLEL	EA	2	$3,500.00	$7000.00
0536 85 25	GUARDRAIL END ANCHORAGE ASSEMBLY/END TREATMENT- TYPE II	EA	2	$1,700.00	$3400.00
0536 85 26	GUARDRAIL END ANCHORAGE ASSEMBLY/END TREATMENT- TYPE CRT	EA	2	$3,000.00	$6000.00
0536 85 27	GUARDRAIL END ANCHORAGE ASSEMBLY/END TREATMENT- DOUBLE FACE TERMINAL	EA	2	$12,750.00	$25500.00
0538 1	GUARDRAIL- RESET	LF	25	$19.50	$487.50
0539 80111	OPAQUE VISUAL BARRIER, F&I, CONCRETE, 2' 3"	LF	25	$80.00	$2000.00
0544 74 40	RELOCATE CRASH CUSHION - ALL OPTIONS	EA	2	$975.00	$1950.00
0544 75 1	CRASH CUSHION	EA	2	$42,000.00	$84000.00
0546 71	RUMBLE STRIPS	PS	10	$1,200.00	$12000.00
0546 72 52	RUMBLE STRIPS, GROUND-IN, 16" CENTERLINE USED WITH RUMBLE STRIPE	GM	1	$3,000.00	$3000.00
0546 72 53	RUMBLE STRIPS, GROUND-IN, 8" EDGELINE USED WITH RUMBLE STRIPE	GM	1	$3,000.00	$3000.00
0546 72 55	RUMBLE STRIPS, GROUND-IN, 16" SHOULDER	GM	1	$3,400.00	$3400.00
0550 10110	FENCING, TYPE A, 0.0-5.0', STANDARD	LF	25	$55.00	$1375.00
0550 10118	FENCING, TYPE A, 0.0-5.0', TYPE A STANDARD, RESET EXISTING	LF	25	$50.00	$1250.00
0550 10119	FENCING, TYPE A, 0.0-5.0', SPECIAL FEATURES	LF	25	$55.00	$1375.00
0550 10120	FENCING, TYPE A, 5.1-6.0, STANDARD	LF	25	$75.00	$1875.00
0550 10128	FENCING, TYPE A, 5.1-6.0', RESET EXISTING	LF	25	$50.00	$1250.00
0550 10130	FENCING, TYPE A, 6.1-7.0, STANDARD	LF	25	$90.00	$2250.00

0550 10140	FENCING, TYPE A, 7.1-8.0', STANDARD	LF	25	$115.00	$2875.00
0550 10148	FENCING, TYPE A, 7.1-8.0', RESET EXISTING	LF	25	$80.00	$2000.00
0550 10149	FENCING, TYPE A, 7.1-8.0', SPECIAL FEATURES	LF	25	$115.00	$2875.00
0550 10150	FENCING, TYPE A, 8.1-10.0', STANDARD	LF	25	$200.00	$5000.00
0550 10158	FENCING, TYPE A, 8.1-10.0', RESET EXISTING	LF	25	$150.00	$3750.00
0550 10159	FENCING, TYPE A, 8.1-10.0', SPECIAL FEATURES	LF	25	$115.00	$2875.00
0550 10169	FENCING, TYPE A, 10.1-12.0', SPECIAL FEATURES	LF	25	$175.00	$4375.00
0550 10210	FENCING, TYPE B, 0.0-5.0', STANDARD FEATURES	LF	25	$72.00	$1800.00
0550 10212	FENCING, TYPE B, 0.5-5.0', W/ VINYL COATING	LF	25	$85.00	$2125.00
0550 10218	FENCING, TYPE B, 0.0-5.0', RESET EXISTING	LF	25	$72.00	$1800.00
0550 10219	FENCING, TYPE B, 0.0-5.0', SPECIAL FEATURES	LF	25	$85.00	$2125.00
0550 10220	FENCING, TYPE B, 5.1-6.0', STANDARD	LF	25	$85.00	$2125.00
0550 10221	FENCING, TYPE B, 5.1-6.0', W/ BARB WIRE ATTMT	LF	25	$125.00	$3125.00
0550 10222	FENCING, TYPE B, 5.1-6.0, W/ VINYL COATING	LF	25	$105.00	$2625.00
0550 10228	FENCING, TYPE B, 5.1-6.0, RESET EXISTING	LF	25	$72.00	$1800.00
0550 10229	FENCING, TYPE B, 5.1-6.0, SPECIAL FEATURES	LF	25	$95.00	$2375.00
0550 10230	FENCING, TYPE B, 6.1-7.0', STANDARD	LF	25	$95.00	$2375.00
0550 10231	FENCING, TYPE B, 6.1-7.0, W/ BARB WIRE ATTMT	LF	25	$135.00	$3375.00
0550 10232	FENCING, TYPE B, 6.1-7.0, W/ VINYL COATING	LF	25	$115.00	$2875.00
0550 10238	FENCING, TYPE B, 6.1-7.0, RESET EXISTING	LF	25	$95.00	$2375.00
0550 10240	FENCING, TYPE B, 7.1-8.0', STANDARD	LF	25	$125.00	$3125.00
0550 10242	FENCING, TYPE B, 7.1-8.0', VINYL COATING	LF	25	$165.00	$4125.00
0550 10248	FENCING, TYPE B, 7.1-8.0, RESET EXISTING	LF	25	$125.00	$3125.00
0550 10250	FENCING, TYPE B, 8.1-10.0', STANDARD FEATURES	LF	25	$165.00	$4125.00
0550 10251	FENCING, TYPE B, 8.1-10.0', WITH BARBED WIRE ATTMT	LF	25	$205.00	$5125.00
0550 10252	FENCING, TYPE B, 8.1-10.0', VINYL COATING	LF	25	$190.00	$4750.00
0550 10256	FENCING, TYPE B, 8-10.0', WITH VINYL COATING AND BARBED WIRE ATTACHMENT	LF	25	$225.00	$5625.00
0550 10258	FENCING, TYPE B, 8.1-10.0', RESET EXISTING FENCE	LF	25	$125.00	$3125.00

0550 10259	FENCING, TYPE B, 8.1-10.0', SPECIAL	LF	25	$205.00	$5125.00
0550 10266	FENCING, TYPE B, 10.1-12.0', WITH VINYL COATING AND BARBED WIRE ATTACHMENT	LF	25	$285.00	$7125.00
0550 10315	FENCING, TYPE R, 0-5.0', VERTICAL	LF	25	$150.00	$3750.00
0550 10325	FENCING, TYPE R, 5.1-6.0', VERTICAL	LF	25	$160.00	$4000.00
0550 10335	FENCING, TYPE R, 6.1-7.0', VERTICAL	LF	25	$300.00	$7500.00
0550 10343	FENCING, TYPE R, 7.1-8.0, W/FULL ENCLOSURE	LF	25	$400.00	$10000.00
0550 10344	FENCING, TYPE R, 7.1-8.0, W / PARTIAL ENCLOSURE	LF	25	$500.00	$12500.00
0550 10353	FENCING, TYPE R, 8.1 - 10.0', WITH FULL ENCLOSURE	LF	25	$800.00	$20000.00
0550 10354	FENCING, TYPE R, 8.1-10.0', WITH PARTIAL ENCLOSURE, TYPE R ONLY	LF	25	$750.00	$18750.00
0550 10355	FENCING, TYPE R, 8.1-10.0', VERTICAL	LF	25	$900.00	$22500.00
0550 10363	FENCING, TYPE R, GREATER THAN 10.0', WITH FULL ENCLOSURE	LF	25	$1,500.00	$37500.00
0570 1 2	PERFORMANCE TURF, SOD	SY	1500	$10.00	$15000.00
0571 1 11	PLASTIC EROSION MAT, TURF REINFORCED MAT, TYPE 1	SY	100	$23.50	$2350.00
0571 1 12	PLASTIC EROSION MAT, TRM, TYPE 2	SY	100	$25.00	$2500.00
0571 1 13	PLASTIC EROSION MAT, TURF REINFORCED MAT, TYPE 3	SY	100	$33.00	$3300.00
0591 1 2	4" LANDSCAPE SLEEVE (UNDERGROUND)	LF	50	$55.00	$2750.00
0591 1 2A	4" LANDSCAPE SLEEVE (BORED)	LF	50	$70.00	$3500.00
0630 2 11	CONDUIT, FURNISH & INSTALL, OPEN TRENCH	LF	1000	$106.00	$106000.00
0630 2 12	CONDUIT, FURNISH & INSTALL, DIRECTIONAL BORE	LF	1000	$152.00	$152000.00
0630 2 14	CONDUIT, FURNISH & INSTALL, ABOVEGROUND	LF	1000	$133.00	$133000.00
0630 2 15	CONDUIT, FURNISH & INSTALL, BRIDGE MOUNT	LF	100	$268.00	$26800.00
0630 2 65	CONDUIT, REMOVE, BRIDGE MOUNT	LF	100	$177.00	$17700.00
0654 001	RECTANGULAR RAPID FLASHING BEACON ASSEMBLY	EA	2	$30,281.00	$60562.00
0660 2101	LOOP ASSEMBLY- F&I, TYPE A	AS	20	$5,670.00	$113400.00
0660 2102	LOOP ASSEMBLY, F&I, TYPE B	AS	20	$5,488.00	$109760.00
0660 2103	LOOP ASSEMBLY, F&I, TYPE C	AS	20	$5,670.00	$113400.00
0660 2104	LOOP ASSEMBLY, F&I, TYPE D	AS	20	$5,670.00	$113400.00
0660 2105	LOOP ASSEMBLY, F&I, TYPE E	AS	20	$5,670.00	$113400.00

0660 2106	LOOP ASSEMBLY, F&I, TYPE F	AS	20	$6,217.00	$124340.00
0660 2107	LOOP ASSEMBLY, F&I, TYPE G	AS	20	$6,217.00	$124340.00
0660 3 11	VEHICLE DETECTION SYSTEM- MICROWAVE, FURNISH & INSTALL CABINET EQUIPMENT	EA	5	$20,131.00	$100655.00
0660 3 12	VEHICLE DETECTION SYSTEM- MICROWAVE, FURNISH & INSTALL, ABOVE GROUND EQUIPMENT	EA	5	$31,248.00	$156240.00
0700 1 11	SINGLE POST SIGN, F&I GROUND MOUNT, UP TO 12 SF	AS	50	$782.00	$39100.00
0700 1 12	SINGLE POST SIGN, F&I GROUND MOUNT, 12-20 SF	AS	20	$3,070.00	$61400.00
0700 1 13	SINGLE POST SIGN, F&I GROUND MOUNT, 21-30 SF	AS	5	$3,910.00	$19550.00
0700 1 14	SINGLE POST SIGN, F&I GROUND MOUNT, 31+ SF	AS	5	$5,125.00	$25625.00
0700 1 18	SINGLE POST SIGN, F&I GROUND MOUNT, IN-STREET FLEXIBLE POST	AS	5	$1,210.00	$6050.00
0700 1 21	SINGLE POST SIGN, F&I BARRIER MOUNT INDEX 11871 UP TO 12 SF	AS	5	$4,450.00	$22250.00
0700 1 22	SINGLE POST SIGN, F&I BARRIER MOUNT INDEX 11871 12-20 SF	AS	5	$5,125.00	$25625.00
0700 1 23	SINGLE POST SIGN, F&I BARRIER MOUNT INDEX 11871, 21-30 SF SHEETING AREA- BACK TO BACK	AS	5	$5,800.00	$29000.00
0700 1 31	SINGLE POST SIGN, F&I BRIDGE MOUNT INDEX 11870, UP TO 12 SF	AS	5	$11,200.00	$56000.00
0700 1 32	SINGLE POST SIGN, F&I BRIDGE MOUNT INDEX 11870, 12-20 SF	AS	5	$12,550.00	$62750.00
0700 1 33	SINGLE POST SIGN, F&I BRIDGE MOUNT INDEX 11870, 21-30 SF	AS	5	$13,900.00	$69500.00
0700 1 40	SINGLE POST SIGN, INSTALL	AS	5	$750.00	$3750.00
0700 1 50	SINGLE POST SIGN, RELOCATE	AS	10	$750.00	$7500.00
0700 1 60	SINGLE POST SIGN, REMOVE	AS	50	$125.00	$6250.00
0700 1 74	SINGLE POST SIGN, F&I CUSTOM, 31+ SF	AS	5	$5,125.00	$25625.00
0700 2 11	MULTI- POST SIGN, F&I GROUND MOUNT, UP TO 12 SF	AS	5	$7,150.00	$35750.00
0700 2 12	MULTI- POST SIGN, F&I GROUND MOUNT, 12-20 SF	AS	5	$11,875.00	$59375.00
0700 2 13	MULTI- POST SIGN, F&I GROUND MOUNT, 21-30 SF	AS	5	$13,360.00	$66800.00
0700 2 14	MULTI- POST SIGN, F&I GROUND MOUNT, 31-50 SF	AS	5	$14,575.00	$72875.00
0700 2 15	MULTI- POST SIGN, F&I GROUND MOUNT, 51-100 SF	AS	5	$19,300.00	$96500.00
0700 2 16	MULTI- POST SIGN, F&I GROUND MOUNT, 101-200 SF	AS	5	$26,050.00	$130250.00
0700 2 40	MULTI- POST SIGN, INSTALL	AS	5	$7,150.00	$35750.00
0700 2 50	MULTI- POST SIGN, F&I GROUND MOUNT, RELOCATE	AS	5	$7,150.00	$35750.00
0700 2 60	MULTI- POST SIGN, F&I GROUND MOUNT, REMOVE	AS	5	$1,750.00	$8750.00

0700 2 80	MULTI- POST SIGN, F&I GROUND MOUNT, REPAIR	AS	5	$5,800.00	$29000.00
0700 3101	SIGN PANEL, FURNISH & INSTALL GROUND MOUNT, UP TO 12 SF	EA	5	$940.00	$4700.00
0700 3102	SIGN PANEL, FURNISH & INSTALL GROUND MOUNT, 12-20 SF	EA	5	$1,480.00	$7400.00
0700 3103	SIGN PANEL, FURNISH & INSTALL GROUND MOUNT, 21-30 SF	EA	5	$2,425.00	$12125.00
0700 3104	SIGN PANEL, FURNISH & INSTALL GROUND MOUNT, 31-50 SF	EA	5	$3,100.00	$15500.00
0700 3105	SIGN PANEL, FURNISH & INSTALL GROUND MOUNT, 51-100 SF	EA	5	$5,800.00	$29000.00
0700 3106	SIGN PANEL, FURNISH & INSTALL GROUND MOUNT, 101-200 SF	EA	5	$11,200.00	$56000.00
0700 3201	SIGN PANEL, FURNISH & INSTALL OVERHEAD MOUNT, UP TO 12 SF	EA	5	$4,868.00	$24340.00
0700 3202	SIGN PANEL, FURNISH & INSTALL OVERHEAD MOUNT, 12-20 SF	EA	5	$5,551.00	$27755.00
0700 3203	SIGN PANEL, FURNISH & INSTALL OVERHEAD MOUNT, 21-30 SF	EA	5	$8,467.00	$42335.00
0700 3204	SIGN PANEL, FURNISH & INSTALL OVERHEAD MOUNT, 31-50 SF	EA	5	$11,201.00	$56005.00
0700 3205	SIGN PANEL, FURNISH & INSTALL OVERHEAD MOUNT, 51-100 SF	EA	5	$16,122.00	$80610.00
0700 3206	SIGN PANEL, FURNISH & INSTALL OVERHEAD MOUNT, 101-200 SF	EA	5	$21,589.00	$107945.00
0700 3401	SIGN PANEL, INSTALL, UP TO 12 SF	EA	5	$670.00	$3350.00
0700 3402	SIGN PANEL, INSTALL, 12-20 SF	EA	5	$740.00	$3700.00
0700 3403	SIGN PANEL, INSTALL, 21-30 SF,	EA	5	$805.00	$4025.00
0700 3404	SIGN PANEL, INSTALL, 31-50 SF	EA	5	$1,075.00	$5375.00
0700 3405	SIGN PANEL, INSTALL, 51-100 SF,	EA	5	$1,750.00	$8750.00
0700 3406	SIGN PANEL, INSTALL, 101-200 SF	EA	5	$2,425.00	$12125.00
0700 3501	SIGN PANEL, RELOCATE, UP TO 12 SF	EA	5	$737.00	$3685.00
0700 3502	SIGN PANEL, RELOCATE, 12-20 SF	EA	5	$872.00	$4360.00
0700 3503	SIGN PANEL, RELOCATE, 21-30 SF	EA	5	$1,075.00	$5375.00
0700 3504	SIGN PANEL, RELOCATE, 31-50 SF	EA	5	$1,345.00	$6725.00
0700 3505	SIGN PANEL, RELOCATE, 51-100 SF	EA	5	$3,775.00	$18875.00
0700 3506	SIGN PANEL, RELOCATE, 101-200 SF	EA	5	$7,150.00	$35750.00
0700 3601	SIGN PANEL, REMOVE, UP TO 12 SF	EA	5	$434.00	$2170.00
0700 3602	SIGN PANEL, REMOVE, 12-20 SF	EA	5	$468.00	$2340.00
0700 3603	SIGN PANEL, REMOVE, 21-30 SF	EA	5	$501.00	$2505.00

0700 3604	SIGN PANEL, REMOVE, 31-50 SF	EA	5	$535.00	$2675.00
0700 3605	SIGN PANEL, REMOVE, 51-100 SF	EA	5	$737.00	$3685.00
0700 3606	SIGN PANEL, REMOVE, 101-200 SF	EA	5	$13,900.00	$69500.00
0700 3624	SIGN PANEL, REMOVE, UP TO 50 SF WITH LIGHTING	EA	5	$13,900.00	$69500.00
0700 3625	SIGN PANEL, REMOVE, 51-100 SF WITH LIGHTING	EA	5	$16,600.00	$83000.00
0700 3626	SIGN PANEL, REMOVE, 101-200 SF WITH LIGHTING	EA	5	$20,650.00	$103250.00
0700 12 11	SIGN BEACON, F&I GROUND MOUNT- AC POWERED, ONE BEACON	AS	5	$20,650.00	$103250.00
0700 12 12	SIGN BEACON, F&I GROUND MOUNT- AC POWERED, TWO BEACONS	AS	5	$23,350.00	$116750.00
0700 12 21	SIGN BEACON, F&I GROUND MOUNT- SOLAR POWERED, ONE BEACON	AS	5	$18,625.00	$93125.00
0700 12 22	SIGN BEACON, F&I GROUND MOUNT- SOLAR POWERED, TWO BEACONS	AS	5	$20,650.00	$103250.00
0700 12 31	SIGN BEACON, F&I OVERHEAD MOUNT, ONE BEACON	AS	5	$34,150.00	$170750.00
0700 12 32	SIGN BEACON, F&I OVERHEAD MOUNT, TWO BEACONS	AS	5	$40,900.00	$204500.00
0700 12 50	SIGN BEACON, RELOCATE BEACON- SIGN TO REMAIN	AS	5	$13,900.00	$69500.00
0700 12 60	SIGN BEACON, REMOVE BEACON- SIGN TO REMAIN	AS	5	$5,800.00	$29000.00
0700 13 10	RETROREFLECTIVE SIGN STRIP- BACK OF RAIL ROAD CROSSBUCK SIGN BLADES	EA	5	$737.00	$3685.00
0700 13 12	RETROREFLECTIVE SIGN STRIP- FURNISH AND INSTALL, 2'	EA	5	$535.00	$2675.00
0700 13 15	RETROREFLECTIVE SIGN STRIP- FURNISH AND INSTALL, 5'	EA	5	$568.00	$2840.00
0701 17101	PROFILED THERMOPLASTIC,STANDARD- CONCRETE SURFACES, WHITE, SOLID,6"	GM	1	$13,475.00	$13475.00
0701 17201	PROFILED THERMOPLASTIC,STANDARD- CONCRETE SURFACES, YELLOW, SOLID,6"	GM	1	$13,475.00	$13475.00
0701 17221	PROFILED THERMOPLASTIC,STANDARD- CONCRETE SURFACES, YELLOW, SKIP,6"	GM	1	$6,050.00	$6050.00
0701 18101	PROFILED THERMOPLASTIC,STANDARD- ASPHALT SURFACES, WHITE, SOLID,6"	GM	1	$13,475.00	$13475.00
0701 18201	PROFILED THERMOPLASTIC,STANDARD- ASPHALT SURFACES, YELLOW, SOLID,6"	GM	1	$13,475.00	$13475.00
0701 18221	PROFILED THERMOPLASTIC,STANDARD- ASPHALT SURFACES, YELLOW, SKIP,6"	GM	1	$6,050.00	$6050.00
0705 10 1	OBJECT MARKER, TYPE 1	EA	5	$737.00	$3685.00
0705 10 2	OBJECT MARKER, TYPE 2	EA	5	$737.00	$3685.00
0705 10 3	OBJECT MARKER, TYPE 3	EA	5	$737.00	$3685.00
0705 10 4	OBJECT MARKER, TYPE 4	EA	5	$805.00	$4025.00
0705 11 1	DELINEATOR, FLEXIBLE TUBULAR	EA	50	$175.00	$8750.00

0705 11 2	DELINEATOR, NON-FLEXIBLE	EA	5	$535.00	$2675.00
0705 11 3	DELINEATOR, FLEXIBLE HIGH VISABILITY MEDIAN	EA	5	$771.00	$3855.00
0705 11 4	DELINEATOR, FLEXIBLE HIGH PERFORMANCE	EA	5	$771.00	$3855.00
0706 1 3	RAISED PAVEMENT MARKER, TYPE B	EA	200	$11.00	$2200.00
0710 90	PAINTED PAVEMENT MARKINGS, FINAL SURFACE	LS	5	$15,000.00	$75000.00
0710 11101	PAINTED PAVEMENT MARKINGS, STANDARD, WHITE, SOLID, 6"	GM	1	$3,755.00	$3755.00
0710 11102	PAINTED PAVEMENT MARKINGS, STANDARD, WHITE, SOLID FOR INTERCHANGE AND URBAN ISLAND, 8"	GM	1	$4,025.00	$4025.00
0710 11103	PAINTED PAVEMENT MARKINGS, STANDARD, WHITE, SOLID FOR INTERCHANGE MARKINGS, 12"	GM	1	$5,375.00	$5375.00
0710 11123	PAINTED PAVEMENT MARKINGS, STANDARD, WHITE, SOLID, 12"	LF	3000	$3.50	$10500.00
0710 11124	PAINTED PAVEMENT MARKINGS, STANDARD, WHITE, SOLID, 18"	LF	2000	$3.70	$7400.00
0710 11125	PAINTED PAVEMENT MARKINGS, STANDARD, WHITE, SOLID, 24"	LF	2000	$3.70	$7400.00
0710 11131	PAINTED PAVEMENT MARKINGS, STANDARD, WHITE, SKIP, 10-30 OR 3-9 SKIP, 6" WIDE	GM	1	$2,810.00	$2810.00
0710 11133	PAINTED PAVEMENT MARKING, STANDARD,WHITE, 3'-9' SKIP DROP LINE AND APPROACH TO TOLL PLAZA, 12" WIDE,	GM	1	$3,350.00	$3350.00
0710 11141	PAINTED PAVEMENT MARKINGS, STANDARD, WHITE, 2-4 DOTTED GUIDELINE/ 6-10 DOTTED EXTENSION, 6"	GM	1	$2,810.00	$2810.00
0710 11160	PAINTED PAVEMENT MARKINGS, STANDARD, WHITE, MESSAGE	EA	25	$161.00	$4025.00
0710 11170	PAINTED PAVEMENT MARKINGS, STANDARD, WHITE, ARROWS	EA	25	$121.00	$3025.00
0710 11180	PAINTED PAVEMENT MARKINGS, STANDARD, WHITE, YIELD LINE	LF	500	$10.75	$5375.00
0710 11190	PAINTED PAVEMENT MARKINGS, STANDARD, WHITE, ISLAND NOSE	SF	100	$24.00	$2400.00
0710 11201	PAINTED PAVEMENT MARKINGS, STANDARD, YELLOW, SOLID, 6"	GM	1	$3,755.00	$3755.00
0710 11202	PAINTED PAVEMENT MARKINGS, STANDARD, YELLOW, SOLID FOR INTERCHANGE AND URBAN ISLAND, 8"	GM	1	$4,025.00	$4025.00
0710 11203	PAINTED PAVEMENT MARKINGS, STANDARD, YELLOW, SOLID, 12"	GM	1	$5,375.00	$5375.00
0710 11223	PAINTED PAVEMENT MARKINGS, STANDARD, YELLOW, SOLID, 12"	LF	100	$21.35	$2135.00
0710 11224	PAINTED PAVEMENT MARKINGS, STANDARD, YELLOW, SOLID, 18"	LF	300	$10.70	$3210.00
0710 11225	PAINTED PAVEMENT MARKINGS, STANDARD, YELLOW, SOLID, 24"	LF	100	$21.35	$2135.00
0710 11231	PAINTED PAVEMENT MARKINGS, STANDARD, YELLOW, SKIP, 6"	GM	1	$2,810.00	$2810.00
0710 11241	PAINTED PAVEMENT MARKINGS, STANDARD, YELLOW, 2-4 DOTTED GUIDELINE/6-10 DOTTED EXTENSION, 6"	GM	1	$2,810.00	$2810.00
0710 11290	PAINTED PAVEMENT MARKINGS, STANDARD, YELLOW, ISLAND NOSE	SF	100	$24.00	$2400.00
0710 11331	PAINTED PAVEMENT MARKINGS, STANDARD,BLACK, SKIP, 6"	GM	1	$3,012.00	$3012.00

0710 11333	PAINTED PAVEMENT MARKING, STANDARD, BLACK, 3'-9' DOTTED LANE DROP AND APPROACH TO TOLL PLAZA, 12"	GM	1	$3,012.00	$3012.00
0710 11341	PAINTED PAVEMENT MARKINGS, STANDARD, BLACK, 2-4 DOTTED GUIDELINE/ 6-10 DOTTED EXTENSION, 6"	GM	1	$3,012.00	$3012.00
0710 11421	PAINTED PAVEMENT MARKINGS, STANDARD, BLUE, SOLID FOR PARKING LOT- ACCESSIBLE MARKINGS, 6"	LF	100	$21.35	$2135.00
0710 12231	PAINTED PAVEMENT MARKINGS, DURABLE, YELLOW, SKIP, 6"	GM	1	$4,200.00	$4200.00
0710 12421	PAINTED PAVEMENT MARKINGS, DURABLE, BLUE, SOLID FOR PARKING LOT-ACCESSIBLE MARKINGS, 6"	LF	100	$24.00	$2400.00
0711 11102	THERMOPLASTIC, STANDARD, WHITE, SOLID, 8" FOR INTERCHANGE AND URBAN ISLAND	GM	1	$14,150.00	$14150.00
0711 11103	THERMOPLASTIC, STANDARD, WHITE, SOLID, 12" FOR INTERCHANGE MARKINGS	GM	1	$31,700.00	$31700.00
0711 11123	THERMOPLASTIC, STANDARD, WHITE, SOLID, 12" FOR CROSSWALK AND ROUNDABOUT	LF	2500	$7.55	$18875.00
0711 11124	THERMOPLASTIC, STANDARD, WHITE, SOLID, 18" FOR DIAGONALS AND CHEVRONS	LF	500	$13.45	$6725.00
0711 11125	THERMOPLASTIC, STANDARD, WHITE, SOLID, 24" FOR STOP LINE AND CROSSWALK	LF	1500	$13.48	$20220.00
0711 11130	THERMOPLASTIC, STANDARD, WHITE, VERTICAL DEFLECTION MARKING	EA	10	$740.00	$7400.00
0711 11140	THERMOPLASTIC, STANDARD, WHITE, VERTICAL DEFLECTION ADVANCED WARNING MARKING	EA	10	$740.00	$7400.00
0711 11141	THERMOPLASTIC, STANDARD, WHITE, 2-4 DOTTED GUIDELINE/ 6-10 GAP EXTENSION, 6"	GM	1	$7,400.00	$7400.00
0711 11143	THERMOPLASTIC, STANDARD, WHITE, 2-4 DOTTED GUIDELINE, 12" FOR ROUNDABOUT	GM	1	$12,800.00	$12800.00
0711 11160	THERMOPLASTIC, STANDARD, WHITE, MESSAGE OR SYMBOL	EA	20	$370.00	$7400.00
0711 11170	THERMOPLASTIC, STANDARD, WHITE, ARROW	EA	20	$222.00	$4440.00
0711 11180	THERMOPLASTIC, STANDARD, WHITE, YIELD LINE	LF	250	$14.15	$3537.50
0711 11224	THERMOPLASTIC, STANDARD, YELLOW, SOLID, 18" FOR DIAGONAL OR CHEVRON	LF	250	$17.45	$4362.50
0711 11241	THERMOPLASTIC, STANDARD, YELLOW, 2-4 DOTTED GUIDE LINE /6-10 DOTTED EXTENSION LINE, 6"	GM	1	$7,400.00	$7400.00
0711 11421	THERMOPLASTIC, STANDARD, BLUE, SOLID,6"	LF	100	$33.50	$3350.00
0711 14123	THERMOPLASTIC, PREFORMED, WHITE, SOLID, 12"	LF	1000	$14.15	$14150.00
0711 14125	THERMOPLASTIC, PREFORMED, WHITE, SOLID, 24"	LF	1000	$24.95	$24950.00
0711 14141	THERMOPLASTIC, PREFORMED, WHITE, 2-4 DOTTED GUIDELINE ON CONCRETE SURFACES	GM	1	$24,950.00	$24950.00
0711 14160	THERMOPLASTIC, PREFORMED, WHITE, MESSAGE	EA	5	$3,080.00	$15400.00
0711 14170	THERMOPLASTIC, PREFORMED, WHITE, ARROWS	EA	20	$737.50	$14750.00
0711 14191	THERMOPLASTIC, PREFORMED, 6" WHITE, RAILROAD DYNAMIC ENVELOPE	LF	100	$33.50	$3350.00
0711 14193	THERMOPLASTIC, PREFORMED, 12" WHITE ON ASPHALT PAVEMENT, RAILROAD DYNAMIC ENVELOPE	LF	250	$35.00	$8750.00
0711 14194	THERMOPLASTIC, PREFORMED, 12" WHITE WITH 4" OUTSIDE BLACK CONTRAST ON CONCRETE PAVEMENT, RAILROAD DYNAMIC ENVELOPE	LF	100	$54.00	$5400.00

0711 14341	THERMOPLASTIC, PREFORMED, BLACK, 2-4 DOTTED GUIDELINE ON CONCRETE SURFACES	GM	1	$24,950.00	$24950.00
0711 14560	THERMOPLASTIC, PREFORMED, WHITE WITH BLACK CONTRAST ON CONCRETE PAVEMENT, MESSAGE OR SYMBOL	EA	5	$2,425.00	$12125.00
0711 14570	THERMOPLASTIC, PREFORMED, WHITE WITH BLACK CONTRAST, ARROW ON CONCRETE SURFACE	EA	5	$1,480.00	$7400.00
0711 15101	THERMOPLASTIC, STANDARD-OPEN GRADED ASPHALT SURFACES WHITE, SOLID, 6"	GM	1	$11,450.00	$11450.00
0711 15102	THERMOPLASTIC, STANDARD-OPEN GRADED ASPHALT SURFACES, WHITE, SOLID, 8"	GM	1	$14,825.00	$14825.00
0711 15131	THERMOPLASTIC, STANDARD-OPEN GRADED ASPHALT SURFACES, WHITE, SKIP, 6",10-30 SKIP OR 3-9 LANE DROP	GM	1	$4,970.00	$4970.00
0711 15133	THERMOPLASTIC, STANDARD-OPEN GRADED ASPHALT SURFACES, WHITE, SKIP, 12"- APPROACH TO TOLL PLAZA OR 3-9 LANE DROP	GM	1	$8,750.00	$8750.00
0711 15201	THERMOPLASTIC, STANDARD-OPEN GRADED ASPHALT SURFACES, YELLOW, SOLID, 6"	GM	1	$11,450.00	$11450.00
0711 15202	THERMOPLASTIC, STANDARD-OPEN GRADED ASPHALT SURFACES YELLOW, SOLID, 8"	GM	1	$14,825.00	$14825.00
0711 15231	THERMOPLASTIC, STANDARD-OPEN GRADED ASPHALT SURFACES, YELLOW, SKIP, 6"	GM	1	$5,375.00	$5375.00
0711 16101	THERMOPLASTIC, STANDARD-OTHER SURFACES, WHITE, SOLID, 6"	GM	3	$11,450.00	$34350.00
0711 16102	THERMOPLASTIC, STANDARD-OTHER SURFACES, WHITE, SOLID, 8"	GM	1	$12,800.00	$12800.00
0711 16131	THERMOPLASTIC, OTHER SURFACES, WHITE, SKIP, 6",10-30 SKIP OR 3-9 LANE DROP	GM	1	$5,375.00	$5375.00
0711 16133	THERMOPLASTIC, STANDARD-OTHER SURFACES WHITE, SKIP, 12"- APPROACH TO TOLL PLAZA OR 3-9 LANE DROP	GM	1	$7,400.00	$7400.00
0711 16201	THERMOPLASTIC, STANDARD-OTHER SURFACES, YELLOW, SOLID, 6"	GM	3	$11,450.00	$34350.00
0711 16202	THERMOPLASTIC, STANDARD-OTHER SURFACES, YELLOW, SOLID, 8"	GM	1	$12,800.00	$12800.00
0711 16231	THERMOPLASTIC, STANDARD-OTHER SURFACES, YELLOW, SKIP, 6"	GM	1	$5,375.00	$5375.00
0711 17	THERMOPLASTIC, REMOVE EXISTING THERMOPLASTIC PAVEMENT MARKINGS: NON-CONFLICTING ONLY	SF	500	$17.50	$8750.00
0711 12131	THERMOPLASTIC, REFURBISHMENT, WHITE, SKIP, 6"	GM	1	$8,750.00	$8750.00
0711 12160	THERMOPLASTIC, REFURBISH, WHITE, MESSAGE	EA	5	$636.25	$3181.25
0711 12170	THERMOPLASTIC, REFURBISH, WHITE, ARROWS	EA	5	$494.50	$2472.50
0711 12231	THERMOPLASTIC, REFURBISHMENT, YELLOW, SKIP, 6"	GM	1	$3,600.00	$3600.00
713103101	PERMANENT TAPE, WHITE, SOLID, 6" FOR CONCRETE BRIDGES	GM	1	$49,250.00	$49250.00
713103102	PERMANENT TAPE, WHITE, SOLID, 8" EXIT LANE AT INTERCHANGE ON CONCRETE PAVEMENT	GM	1	$62,750.00	$62750.00
713103103	PERMANENT TAPE, WHITE, SOLID DROP LANE MARKING, 12" FOR CONCRETE BRIDGES,	GM	1	$83,000.00	$83000.00
713103131	PERMANENT TAPE, WHITE, SKIP/DOTTED, 6" FOR CONCRETE SURFACES	GM	1	$22,250.00	$22250.00
713103133	PERMANENT TAPE, WHITE, SKIP, 12" WIDE 3'-9' DROP LANE ON CONCRETE SURFACES	GM	1	$42,500.00	$42500.00
713103201	PERMANENT TAPE, YELLOW, SOLID, 6" FOR CONCRETE BRIDGES	GM	1	$49,250.00	$49250.00

713103231	PERMANENT TAPE, YELLOW, 10-30 SKIP/ 3-9 DOTTED, 6" FOR CONCRETE SURFACES	GM	1	$22,250.00	$22250.00
713103331	PERMANENT TAPE, BLACK, SKIP/DOTTED, 6" FOR CONCRETE SURFACES	GM	1	$22,250.00	$22250.00
713103333	PERMANENT TAPE, BLACK, 3'-9' DROP LANE, 12" ON CONCRETE SURFACES	GM	1	$42,500.00	$42500.00
713107	PREFORMED/PERMANENT TAPE, REMOVE	SF	50	$53.50	$2675.00
400143	CLEANING & COATING CONCRETE SURFACE, CLASS 5	SF	5	$3.00	$15.00
906-173-7	SINGLE COMPONENT POLYURETHANE INJECTION	GAL	500	$400.00	$200000.00
906-173-8	TWO COMPONENT POLYURETHANE INJECTION	LB	10000	$15.00	$150000.00
MISCELLANEOUS LABOR, EQUIPMENT, MATERIAL, AND SUB-CONTRACTOR ITEMS					
	LABOR - FOREMAN	HR	1	$174.00	$174.00
	LABOR - OPERATOR	HR	1	$109.00	$109.00
	LABOR - TRUCK DRIVER	HR	1	$78.00	$78.00
	LABOR - PIPE LAYERS (FOR PIPES < 48" DIA.)	HR	1	$100.00	$100.00
	LABOR - LABORER	HR	1	$100.00	$100.00
	EQUIPMENT - FOREMAN P/U WITH HAND TOOLS	HR	1	$60.00	$60.00
	EQUIPMENT - JOB TRUCK WITH MANDATORY TOOLS*	HR	1	$75.00	$75.00
	EQUIPMENT - CRANE (20 TON)	HR	1	$250.00	$250.00
	EQUIPMENT - CRANE (60 TON)	HR	1	$350.00	$350.00
	EQUIPMENT - TRACTOR & TRAILER (TRANSPORT)	HR	1	$95.00	$95.00
	EQUIPMENT - TRACK HOE (TO 100 HP)	HR	1	$137.00	$137.00
	EQUIPMENT - TRACK HOE (101 HP TO 170 HP)	HR	1	$155.00	$155.00
	EQUIPMENT - RUBBER TIRED BACKHOE	HR	1	$137.00	$137.00
	EQUIPMENT - WHEEL LOADER (TO 150 HP)	HR	1	$137.00	$137.00
	EQUIPMENT - WHEEL LOADER (151 HP AND UP)	HR	1	$155.00	$155.00
	EQUIPMENT - TRACK TYPE TRACTORS (TO 100 HP)	HR	1	$137.00	$137.00
	EQUIPMENT - TRACK TYPE TRACTORS (101 HP AND UP)	HR	1	$155.00	$155.00
	EQUIPMENT - DUMP TRUCK (TANDEM AXLE)	HR	1	$95.00	$95.00
	EQUIPMENT - PLATE TAMP	HR	1	$25.00	$25.00
	EQUIPMENT - 3" TRASH PUMP	HR	1	$20.00	$20.00
	EQUIPMENT - 4" DOUBLE DIAPHRAGM PUMP	HR	1	$25.00	$25.00
	EQUIPMENT - AIR COMPRESSOR (125 SCFM)	HR	1	$10.00	$10.00
	EQUIPMENT - WELL POINT PUMP	HR	1	$35.00	$35.00
	EQUIPMENT - 4" JET PUMP	HR	1	$35.00	$35.00
	MATERIAL - 2500 PSI CONCRETE (UN-FORMED)	CY	1	$300.00	$300.00
	MATERIAL - OFF SITE SELECT FILL	CY	1	$35.00	$35.00
	MATERIAL - LIMEROCK BASE MATERIAL	TN	1	$45.00	$45.00

	MATERIAL - #57 WASHED STONE	TN	1	$65.00	$65.00
	MATERIAL - ASPHALT PAVING (1.5" THICK; TYPE S-3)	SY	1	$40.00	$40.00
	MATERIAL - BAHIA SOD	SY	1	$9.50	$9.50
	SUB-CONTRACTOR - WELDER WITH TRUCK	HR	1	$225.00	$225.00
	SUB-CONTRACTOR - TRACTOR WITH 7' BUSH HOG	HR	1	$400.00	$400.00

* Contractor Job Truck Mandatory Tools

	Tool	Minimum size	Quantity
1	Air compressor	20 CFM @ 90PSI	1
2	3/4" drive ratchet and socket set		1
3	1 inch drive air impact wrench		1
4	1 inch drive sockets	1-1/2" to 3"	1 each
5	Slug wrenches	1-1/2" to 3"	1
6	End wrenches	7/16" to 1-1/2"	2 each
7	Porta band saw w spare blades	4" opening	1
8	Sawzall w spare blades		1
9	Nylon slings 5,000 and 10,000 pound rated (vertical)	2" 2 ply/4" 2 ply	2 each
10	Grade 80 Chain 10,000 pound rated	1/2" X 10 ft	2
11	Clevis or Shackles 5 ton rated	5/8" alloy	4
12	Porta power 10 ton		1
13	Shovels- round and square point		3 each
14	Cutting torch set *see note*		1
15	Gas or diesel stick welder and accessories *see note*		1
16	Small diaphragm pump and accessories	2" suction	1
17	Tap and die set	1/2" to 2" NPT	1
18	Drill and bits for steel or ductile	1/2" to 2" NPT size	1 set
19	Pry bar	5 foot	1
20	Come along	2ton	2
21	Circular Saw and blades for cribbing/forms	7 1/2 inch	2
22	Generator 120/240 volt	3500 watt	1
23	Framing hammer and nails for forms		2
24	Screw gun and screws for forms and cribbing		1
25	Gas powered cutoff saw (K-12)	12inch	1
26	Chain saw for cribbing and for'ms	14 inch bar	1
27	Sledge hammers	4t/ and 6tl	1 each
28	Crew PPE to include Hard hat and gloves at minimum	as needed	per person

EXHIBIT "D"

Conditional Federal/Grant-Funded Contract Addendum

(Place Conditional Federal/Grant-Funded Contract Addendum behind this page)

EXHIBIT "D"
CONDITIONAL FEDERAL/GRANT-FUNDED CONTRACT ADDENDUM

1. Applicability

1.1 This Exhibit applies only if activated under Section 25 of the Agreement or under a Task Order. If not activated, this Exhibit is reserved and has no operative effect.
1.2 If activated, this Exhibit supplements the Agreement and applies to the federally funded or grant-funded Work only. Contractor shall comply with all applicable requirements of the federal award, grant agreement, pass-through entity, program rules, and applicable law.
1.3 The City may provide additional award-specific clauses, certifications, forms, wage determinations, reporting requirements, or flow-down provisions. Contractor shall comply with such requirements as a condition of performing the affected Work and receiving payment from the applicable funding source.

2. Federal Award and Grant Information

Federal/Grant Program: [insert]
Federal Awarding Agency: [insert]
Pass-Through Entity: [insert, if applicable]
Assistance Listing Number: [insert, if applicable]
Federal Award Identification Number: [insert, if applicable]
Award or Disaster Declaration Date: [insert, if applicable]
Project Number: [insert]
Special Award Conditions: [insert or attach]

3. Remedies for Breach

For contracts exceeding the simplified acquisition threshold, Contractor acknowledges that the City may exercise all administrative, contractual, legal, and equitable remedies available under the Contract Documents and applicable law if Contractor violates or breaches contract terms. Remedies may include withholding payment, requiring correction, suspension of Work, termination, procurement from alternate sources, damages, sanctions, and any other appropriate remedy.

4. Termination for Cause and Convenience

For contracts in excess of $10,000, the City may terminate the federally funded or grant-funded Work for cause or convenience as provided in the Agreement. The notice of termination will identify the effective date and the manner of termination. Contractor shall be paid only for authorized Work satisfactorily performed before the effective date of termination, subject to documentation, offsets, allowable cost requirements, and applicable grant rules.

5. Equal Employment Opportunity

Except as otherwise provided under 41 C.F.R. Part 60, if the Work is a federally assisted construction contract as defined in 41 C.F.R. § 60-1.3, Contractor shall comply with the equal opportunity clause in 41 C.F.R. § 60-1.4(b), which is incorporated by reference as if fully set forth

RESERVED

herein, and shall include the required clause in covered subcontracts and purchase orders.

6. Davis-Bacon Act and Copeland Anti-Kickback Act

When required by federal program legislation, all prime construction contracts in excess of $2,000 must include compliance with the Davis-Bacon Act, 40 U.S.C. §§ 3141-3148, as supplemented by Department of Labor regulations at 29 C.F.R. Part 5. If Davis-Bacon applies, Contractor shall pay laborers and mechanics at rates not less than the applicable wage determination, pay wages not less than once per week, submit certified payrolls if required, and comply with all applicable labor standards.
If Davis-Bacon applies, Contractor shall also comply with the Copeland "Anti-Kickback" Act, 40 U.S.C. § 3145, as supplemented by 29 C.F.R. Part 3, and shall not induce any person employed in the construction, completion, or repair of public work to give up any part of compensation to which the person is entitled. Contractor shall report suspected or reported violations to the City.

7. Contract Work Hours and Safety Standards Act

Where applicable, for contracts in excess of $100,000 that involve the employment of mechanics or laborers, Contractor shall comply with 40 U.S.C. §§ 3702 and 3704, as supplemented by Department of Labor regulations at 29 C.F.R. Part 5. Contractor shall compute wages based on a standard 40-hour workweek and shall compensate covered workers at not less than one and one-half times the basic rate of pay for hours worked in excess of 40 hours in a workweek. No laborer or mechanic shall be required to work under unsanitary, hazardous, or dangerous conditions. These requirements do not apply to purchases of supplies, materials, or articles ordinarily available on the open market, or to contracts for transportation or transmission of intelligence.

8. Rights to Inventions

If the federal award meets the definition of "funding agreement" under 37 C.F.R. § 401.2(a), and the Work involves substitution of parties, assignment, or performance of experimental, developmental, or research work under that funding agreement, Contractor shall comply with 37 C.F.R. Part 401 and any implementing regulations issued by the awarding agency.

9. Clean Air Act and Federal Water Pollution Control Act

For contracts and subgrants exceeding $150,000, Contractor shall comply with all applicable standards, orders, and regulations issued pursuant to the Clean Air Act, 42 U.S.C. §§ 7401-7671q, and the Federal Water Pollution Control Act, 33 U.S.C. §§ 1251-1387. Contractor shall report each violation to the City, and the City will report violations as required to the federal awarding agency and the appropriate EPA regional office. Contractor shall include these requirements in each covered subcontract exceeding $150,000.

10. Debarment and Suspension

Contractor shall comply with Executive Orders 12549 and 12689 and 2 C.F.R. Part 180. Contractor shall not enter into covered transactions with parties listed on the governmentwide exclusions in the System for Award Management. Contractor shall verify that Contractor, its principals, and its affiliates are not excluded or disqualified and shall include this requirement in lower-tier covered

RESERVED

transactions.

11. Byrd Anti-Lobbying Amendment

For awards exceeding $100,000, Contractor shall comply with the Byrd Anti-Lobbying Amendment, 31 U.S.C. § 1352. Contractor shall certify that it has not and will not use federal appropriated funds to pay any person or organization for influencing or attempting to influence an officer or employee of an agency, a member of Congress, an officer or employee of Congress, or an employee of a member of Congress in connection with obtaining a federal contract, grant, or other covered award. Contractor shall disclose lobbying with non-federal funds as required and shall require each lower tier to make the same certification and disclosure.

12. Procurement of Recovered Materials

Contractor shall comply with 2 C.F.R. § 200.323 and Section 6002 of the Solid Waste Disposal Act, as amended by the Resource Conservation and Recovery Act, to the extent applicable. Contractor shall procure designated items containing the highest percentage of recovered materials practicable, consistent with competition and performance requirements, when the purchase price exceeds the applicable threshold or the value of the quantity acquired during the preceding fiscal year exceeded the applicable threshold. Contractor shall also procure solid waste management services in a manner that maximizes energy and resource recovery and shall support the City's affirmative procurement program where applicable.

13. Domestic Preferences for Procurements

As appropriate and to the extent consistent with law, Contractor shall comply with 2 C.F.R. § 200.322 by providing a preference for the purchase, acquisition, or use of goods, products, or materials produced in the United States, including iron, aluminum, steel, cement, and other manufactured products, when the Work is performed under a federal award.

14. Prohibition on Certain Telecommunications and Video Surveillance Equipment or Services

Contractor shall comply with 2 C.F.R. § 200.216 and shall not obligate or expend federal funds to procure, obtain, extend, renew, or enter into a contract to procure or obtain covered telecommunications equipment or services as a substantial or essential component of any system or as critical technology as part of any system. Contractor shall include this prohibition in applicable subcontracts and purchase orders.

15. Build America, Buy America

If the Work is an infrastructure project funded by a federal financial assistance program subject to the Build America, Buy America Act, Contractor shall comply with all applicable domestic content procurement preference requirements for iron, steel, manufactured products, and construction materials permanently incorporated into the project, unless a waiver applies. Contractor shall provide certifications, documentation, and product information required by the City, funding agency, or pass-through entity.

16. Small and Minority Businesses, Women's Business Enterprises, Veteran-Owned Businesses,

RESERVED

and Labor Surplus Area Firms

Contractor shall take the affirmative steps required by 2 C.F.R. § 200.321 to assure that small businesses, minority businesses, women's business enterprises, veteran-owned businesses, and labor surplus area firms are used when possible, including, as applicable, placing such businesses on solicitation lists, soliciting them when they are potential sources, dividing requirements when economically feasible, establishing delivery schedules that encourage participation, using appropriate assistance organizations, and requiring subcontractors to take the same affirmative steps.

17. Bonding Requirements for Federal Construction or Facility Improvement Contracts

For construction or facility improvement contracts or subcontracts exceeding the simplified acquisition threshold, Contractor shall comply with the bonding requirements in 2 C.F.R. § 200.326 when the federal award requires such bonding, including bid guarantee, performance bond, and payment bond requirements unless the federal agency or pass-through entity determines that the City's bonding policy and requirements adequately protect the federal interest.

18. Access to Records; Retention

Contractor shall provide the City, the federal awarding agency, the pass-through entity, the Comptroller General of the United States, and their authorized representatives access to any documents, papers, records, and other materials that are directly pertinent to the federal or grant-funded Work for the purpose of making audits, examinations, excerpts, and transcriptions. Contractor shall retain records for the period required by 2 C.F.R. Part 200, the award terms, the Agreement, and applicable law, whichever is longer.

19. No Obligation by Federal Government

The federal government is not a party to this Agreement or any Task Order and is not subject to any obligations or liabilities to the City, Contractor, or any other party arising from the Agreement or Work.

20. Program Fraud and False or Fraudulent Statements

Contractor acknowledges that 31 U.S.C. Chapter 38 and other federal laws concerning fraud, false claims, and false statements may apply to Contractor's actions pertaining to federally funded or grant-funded Work. Contractor shall not submit false, fictitious, fraudulent, or misleading claims, certifications, invoices, records, or statements.

21. Additional Award-Specific Terms

If the federal awarding agency, pass-through entity, grant agreement, disaster assistance program, or other funding source requires additional clauses, certifications, forms, reporting, wage determinations, environmental/historic preservation conditions, civil rights provisions, procurement certifications, or other requirements, such requirements are incorporated into the affected Task Order upon written notice by the City. Contractor shall execute additional documents reasonably required by the City to document compliance.

RESERVED

CITY COMMISSION MEETING
CITY OF ST. PETE BEACH
COMMISSION CHAMBERS

Agenda Report

Agenda Title Name: Authorize the City Manager to execute the Contract with Marolf Environmental for the Pump & Lift Station Rehabilitations capital improvement project in the amount not to exceed $2,950,000.00.

Action Request: Motion to authorize the City Manager to execute the Contract with Marolf Environmental for the Pump & Lift Station Rehabilitations capital improvement project in the amount not to exceed $2,950,000.00.

Strategic Objective: Recovery, Resiliency & Sustainability

Date: June 23, 2026

Prepared By: Camden Mills, Public Services Director

Through: Frances Robustelli, City Manager

Summary of Issue: The City publicly advertised a Request for Bids (RFB) seeking qualified contractors to perform the Pump and Lift Stations Rehabilitation capital improvement project. Five (5) bids were received on May 6, 2026. Marolf Environmental was determined to be the lowest responsive and responsible bidder meeting all City qualification requirements.

The project includes rehabilitation of Wastewater Pump Stations 2 and 3, and Lift Stations 4, 5, 7, 9, 10, 11, 12, 13, 14, 15, and Stormwater Lift Station 35. Improvements generally consist of flow meter replacement, electrical and instrumentation upgrades, valve vault rehabilitation, wet well cleaning, force main appurtenance replacement, site restoration, and other associated infrastructure improvements.

In addition to the rehabilitation work, Lift Stations 4, 7, and 10 include flood mitigation improvements designed to improve system reliability before, during, and after storm events. These improvements include elevated electrical control equipment, elevated operator access platforms and stairs, standby backup generators with sound-attenuated enclosures and fuel tanks, and

architectural screening consisting of walls, fencing, and landscaping. Conditional Use Permits are required for these mitigation improvements. The Conditional Use Permit process will include public hearings and opportunities for public comment. Staff recommends approval of the construction contract at this time to allow work to proceed at the remaining project locations and to allow procurement of long-lead equipment. Construction of the Lift Station 4, 7 and Lift Station 10 mitigation improvements will remain subject to completion of the land development approval process.

The project supports the City's ongoing efforts to improve wastewater system reliability, reduce vulnerability to flooding and storm surge impacts, extend the useful life of critical infrastructure assets, and maintain compliance with regulatory requirements. Funding for the project is available within the Pump Stations Capital Improvement Program budget.

Funding:

401.5350.563001 Pump Stations

CIP Project 3003 – Pump & Lift Station Rehabilitations (remaining balance $3,088,712.20)

The contract amount of $2,950,000 is within the available project budget of $3,088,712.20, leaving approximately $138,712 available for contingencies and unforeseen conditions, or reallocation.

The actual bid costs have been submitted to insurance and FEMA for evaluation and funding support.

The City has requested $2,370,000 in grant funding from the Florida Department of Emergency Management through the Flood Mitigation Assistance Program for Lift Stations 4, 7, and 10 mitigation and rehabilitation.

Attachments:

1. Marolf Environmental Contract 1

CITY OF ST. PETE BEACH, FLORIDA
SERVICES AGREEMENT

Wastewater Lift Stations Rehabilitation

This is an Agreement (the "Agreement") entered into by and between the **CITY OF ST. PETE BEACH** (hereinafter "City") and **MAROLF ENVIRONMENTAL** (hereinafter "Contractor"). The City and Contractor together shall be referred to as the "parties."

WHEREAS, The City properly issued a Request for Bids, attached and incorporated hereto as Exhibit "B" and the City Commission authorized the selection of Contractor at its June 23, 2026, public hearing.

WHEREAS, City desires to purchase from Contractor the services described in this Agreement.

WHEREAS, Contractor is in the business of providing the services described herein, and has submitted an appropriate proposal to the City to provide the same.

WHEREAS, this Agreement has been properly approved by the appropriate authority of the City and the Contractor.

NOW, THEREFORE, upon the mutual covenants contained herein, and other good and valuable considerations, the sufficiency of which is hereby acknowledged, the parties hereto hereby agree to the following:

1. Recitals. The foregoing recitals are true and correct and incorporated herein by reference.

2. Standard Contract Addendum. The attached Standard Contract Addendum, which contains all the Florida Statutorily required provisions applicable to this Agreement, is attached hereto as Exhibit "A" and its provisions modify and supplement this Agreement.

3. Scope of Services. The Contractor must perform all work for the City required by the contract documents as set forth below:

a. Contractor will furnish all labor, materials, and equipment necessary as indicated in the Request for Bids (Exhibit "B") in the amount of Not To Exceed $2,950,000.

b. Contractor will submit a detailed schedule within 30 days after preconstruction conference.

c. Contractor must supervise the workforce to ensure that all workers conduct themselves and perform their work in a safe and professional manner. Contractor must comply with all OSHA safety rules and regulations in the operation of equipment and in the performance of the work. Contractor must at all times have a competent field supervisor on the job site to enforce these policies and procedures at the Contractor's expense.

d. Contractor will provide the City with seventy-two (72) hours written notice prior to the beginning of work under this Agreement and prior to any schedule change with the exception of changes caused by inclement weather.

e. Contractor must comply with any and all Federal, State, and local laws and regulations now in effect, or hereinafter enacted during the term of this Agreement, which are applicable to the Contractor, its employees, agents or subcontractors, if any, with respect to the work and services described herein. The Contractor further warrants that there has been no violation of copyrights or patent rights either in the United States of America or in foreign countries in connection with the work of the contract.

f. Contractor warrants to the City that all goods and materials furnished under the contract will be new unless otherwise specified and that contractor possesses good, clear, and marketable title to said goods and there are no pending liens, claims, or encumbrances whatsoever against said goods. All work not conforming to these requirements, including substitutions not properly approved and authorized may be considered defective. Contractor further warrants that all goods, materials and workmanship furnished, whether furnished by the Contractor or its subcontractors and suppliers, will comply with the specifications, drawings and other descriptions supplied or adopted. Last, Contractor warrants all material and workmanship for a minimum of (1) year from date of project completion and acceptancy by the City. If within one (1) year after acceptance by the City, or within such larger period of time as may be prescribed by law any of the work is found to be defective or not in accordance with the contract documents, the Contractor will, after receipt of a written notice from the City to do so, promptly correct the work.

4. Damages. Time is of the essence in the performance of this Agreement. City shall be entitled to liquidated damages in the amount of $500 per day, for each day after the date set forth in paragraph 10, that Contractor has failed to properly and completely deliver all goods or provide all service specified herein. The Contractor specifically acknowledges that the foregoing sum is reasonable and does not constitute a penalty.

5. Remedies.

   a. Damages. The City reserves the right to recover any ascertainable actual damages incurred as a result of the failure of the Contractor to perform in accordance with the requirements of this Agreement, or for losses sustained by the city resultant from the Contractor's failure to perform in accordance with the requirements of this Agreement.

   b. Correction of Work. If, in the judgment of the City, work provided by the Contractor does not conform to the requirements of this Agreement, or if the work exhibits poor workmanship, the city reserves the right to require that the Contractor correct all deficiencies in the work to bring the work into conformance without additional cost to the City, and/or replace any personnel who fail to perform in accordance with the requirements of this Agreement. The City is the sole judge of non-conformance and the quality of workmanship.

6. Waiver of Liens. Prior to final payment of the Contract Sum, a final waiver of lien must be submitted by all suppliers, subcontractors, and/or Contractors who worked on the project that is the subject of this Agreement.

7. Warranties.

a. Warranty of Title. Contractor warrants to the City that all goods and materials furnished under the contract will be new unless otherwise specified and that Contractor possesses good, clear, and marketable title to said goods and there are no pending liens, claims, or encumbrances whatsoever against said goods. All work not conforming to these requirements, including substitutions not properly approved and authorized may be considered defective.

b. Warranty of Specifications. The Contractor warrants that all goods, materials, workmanship furnished, whether by the Contractor or its subcontractors and suppliers, will comply with the specifications, drawings and other descriptions supplied or adopted.

c. Warranty of Merchantability. The Contractor warrants all material and workmanship for a minimum of one (1) year from date of project completion and acceptance by the City. If within one (1) year after acceptance by the city, or within such larger period of time as may be described by law any of the work is found to be defective or not in accordance with the contract documents, the Contractor must after receipt of a written notice from the City to do so, promptly correct the work unless the City has previously given the Contractor a written acceptance of such condition.

8. Term. This Agreement will remain in effect for a period of one year from the Effective Date.

9. Effective date. The "Effective Date" of this Agreement shall be the date this Agreement has been executed by all parties.

10. Termination. This Agreement may be canceled by the City when:
   a. Sufficient funds are not available to continue its full and faithful performance to the Agreement.
   b. Sub-standard or non-performance of Agreement.
   c. The City wishes to terminate the Agreement at any time and for any reason, upon giving thirty (30) days prior written notice to the Contractor.

11. Fiscal Non-funding. If funds for the requested services described herein are not appropriated via the annual budget adoption process, the City reserves the right to cancel the Agreement immediately upon written notice to the Contractor.

12. Non-Exclusivity. Contractor acknowledges that the City may enter into agreements with other consultants or may have its own employees complete the work for services similar to the services that are subject to this Agreement.

13. Compensation. Upon Contractor's satisfactory full performance of the services or in accordance with the payment schedule provided in the attached proposal, City shall pay Contractor, as full consideration for services provided in this Agreement.

14. Insurance. To the extent that this Agreement requires Contractor to provide any services of any kind, Contractor and all of Contractor's subcontractors shall maintain public liability insurance in a combined single limit for bodily injury and property damage in the amount of not less than $1,000,000.00, satisfactory to the City Manager, naming the City as an additionally named insured

and providing coverage up through and including the final performance of any services provided herein. Contractor and all of Contractor's subcontractors shall maintain in full force and effect a policy of worker's compensation insurance for all of Contractor's employees in accordance with applicable state and federal law. Said insurance coverage shall include employer's liability with a single limit of $100,000.00 per accident or occurrence. Contractor shall present City with a certificate for all the foregoing insurance, at the time of executing this Agreement and at such other times requested by the City.

The Contractor waives all rights against the City, its consultants, separate contractors, if any, and any of its subcontractors, agents and employees, for any and all damages caused to the extent covered by insurance described herein and obtained pursuant to this Section or other property insurance applicable to the services and product provided under this Agreement. The City shall require of the Contractor, Contractor's consultants, separate contractors, if any, and the subcontractors, sub-subcontractors, agents and employees of any of them, by appropriate agreements, written where legally required for validity, similar waivers each in favor of other parties enumerated herein. The policies shall provide such waiver of subrogation by endorsement otherwise. A waiver of subrogation shall be effective as to a person or entity even though that person or entity would otherwise have a duty of indemnification, contractual or otherwise, did not pay the insurance premium directly or indirectly, and whether or not the person or entity had an insurable interest in the property damaged.

15. Indemnification. In consideration of the payment of ten dollars as part of the compensation described herein, such sum being specifically found by Contractor to be sufficient consideration for this indemnification, Contractor shall indemnify, defend and hold the City harmless for itself, its past/present/future elected and appointed officials, its employees, agents and assigns, from and against any and all losses, claims, damages, suits, actions, liability or demands, including attorneys' fees and costs of litigation through all appellate proceedings, arising from the performance or non-performance of this Agreement, whether caused in part by the City or not, and in connection with violations of copyrighted or trademarked materials used by Contractor, loss of life, bodily or personal injury, or property damage, including loss of use thereof, directly or indirectly caused by, resulting from, arising out of or occurring in connection with the operations of the Contractor or its officers, employees, agents, subcontractors, or independent Contractors, excepting only such loss of life, bodily or personal injury, or property damage solely attributable to the gross negligence or willful misconduct of the City or its elected or appointed officials and employees. In any and all claims against the City, or any of their agents or employees by any employee of the Contractor any subcontractor, anyone directly or indirectly employed by any of them or anyone for whose acts any of them may be liable, the indemnification obligation under this paragraph is not limited in any way by any limitation in this amount or type of damages compensation or benefits payable by or for the Contractor or any subcontractor under Workers' Compensation Acts, Disability Benefit Acts or other Employee Benefit Acts. Nothing contained herein is intended nor may it be construed, to waive City's rights and immunities under the common law or Section 768.28, Florida Statutes, as amended from time to time; nor will anything included herein be construed as consent to be sued by any third parties in any matter arising out of this Agreement. To the extent considered necessary by the Contract Administrator and the City Attorney, any sums due Contractor under this Agreement may be retained by the City until all of the City's claims subject to this indemnification obligation have been settled or otherwise resolved,

and any amount withheld is not subject to payment of interest by the City. The above provisions will survive the termination or expiration of this Agreement and will pertain to any occurrence during the term of this Agreement, even though the claim may be made after the termination or expiration hereof.

16. Discriminatory Vendor List. Contractor hereby acknowledges its continuous duty to disclose to the City if the Contractor or any of its affiliates, as defined by Section 287.134 (1)(a), Florida Statutes, are placed on the Discriminatory Vendor List. Pursuant to Section 287-134 (2)(a), Florida Statutes: "An entity or affiliate who has been placed on the discriminatory vendor list may not submit a bid, proposal, or reply on a contract to a public entity; may not submit a bid or proposal, or reply on a contract with a public entity for the construction or repair of a public building or public work; may not submit bids, proposals, or replies on leases of real property to a public entity; may not be awarded or perform work as a contractor, supplier, subcontractor, or consultant under a contract with any public entity; and may not transact business with any public entity."

17. Independent Contractor. This Agreement does not create an employee/employer relationship between the parties. It is the intent of the parties that the Contractor is an independent contractor under this Agreement and not the City's employee for any purposes, including but not limited to, the application of the Fair Labor Standards Act minimum wage and overtime payments, Federal Insurance Contribution Act, the Social Security Act, the Federal Unemployment Tax Act, the provisions of the Internal Revenue Code, the State Worker's Compensation Act, and the State Unemployment Insurance law. The Contractor will retain sole and absolute discretion in the judgment of the manner and means of carrying out Contractor's activities and responsibilities hereunder provided, further that administrative procedures applicable to services rendered under this Agreement will be those of Contractor, which policies of Contractor will not conflict with City, State, or United States policies, rules, or regulations relating to the use of Contractor's funds provided for herein. The contractor agrees that it is a separate and independent enterprise from the City, that it had full opportunity to find other business, that it has made its own investment in it business, and that it will utilize a high level of skill necessary to perform the work. This Agreement must not be construed as creating any joint employment relationship between the Contractor and the City and the City will not be liable for any obligation incurred by Contractor, including but not limited to unpaid minimum wages and/or overtime premiums.

18. Audit Rights. The City reserves the right to audit the records of the Contractor for the commodities and/or serves provided under the contract at any time during the performance and term of the contract and for a period of five (5) years after completion and acceptance by the City. If required by the City, the Contractor agrees to submit to an audit by an independent certified public accountant selected by the City. The Contractor must allow the City to inspect, examine and review the records of the Contractor in relation to this Agreement at any an all times during normal business hours during the term of the Agreement.

19. Exhibits. The following Exhibits shall be attached, incorporated, and made a part of this Agreement:
    a. Standard Contract Addendum (Exhibit "A")
    b. Request for Bid/Proposal (Exhibit "B")

c. Vendor Bid/Proposal (Exhibit "C")
d. Conditional Federal/Grant-Funded Contract Addendum (Exhibit "D")

20. Notices. All notices sent pursuant to this Agreement shall be given in writing via certified mail or overnight courier and shall be delivered to the following addresses:

As to Contractor:
Marolf Environmental
4430 Erie Drive
New Port Richey, FL 34652

As to City:
City Manager
City of St. Pete Beach
155 Corey Avenue
St. Pete Beach, FL 33706

With Copy To:
tnorwood@marolf.com

With Copy To:
attorney@stpetebeach.org

21. Conflicts and Severability. To the extent that any terms in the attached proposal conflict with the terms of this Agreement, the terms of this Agreement shall control and supersede such conflicting terms in the attached proposal, to the extent of such conflict. If any section, part of section, paragraph, clause, phrase, or word of this Agreement is declared invalid, the remaining provisions of this Agreement shall not be affected.

22. Amendments. This document and exhibits embody the entire Agreement of the parties. There are no promises, terms, conditions, or representations binding on either party hereto, other than those contained herein; and this document shall supersede all previous communications, representations, and/or agreements between the parties hereto, whether written or oral. This Agreement shall not be modified by any oral statement, communication, Agreement, course of conduct, or by anything other than a writing signed by the parties. This Agreement may be amended or modified only in writing signed by all parties hereto.

23. Jurisdiction, Venue, Attorney Fees. This Agreement shall be governed and construed according to the laws of Florida, and venue for any action arising herefrom shall be in Pinellas County, Florida. The prevailing party in any action to enforce or interpret this Agreement shall be entitled to reasonable attorney's fees incurred through all appellate proceedings.

24. Assignment. This Agreement shall be binding upon the parties, their successors, assigns, and legal representatives. Contractor shall not assign or otherwise transfer any of the rights or duties under this Agreement, without the express written consent of the City.

25. Counterparts. This Agreement may be executed and delivered in any number of counterparts, each of which so executed and delivered shall be deemed to be an original and all of which shall constitute one and the same instrument. Facsimile, documents executed, scanned and transmitted electronically and electronic signatures shall be deemed original signatures for purposes of this Agreement and all matters related thereto, with such facsimile, scanned and electronic signatures having the same legal effect as original signatures.

26. Authority. Contractor hereby acknowledges that the person executing this Agreement on

behalf of Contractor has the full authority to do so and to bind Contractor to the terms hereof.

IN WITNESS WHEREOF, the Parties have executed this Agreement on the day and year set forth below.

Under penalties of perjury, and pursuant to Sec. 92.525, Fla. Stat., Contractor declares that Contractor has read the Section 15 of the Standard Contract Addendum, Exhibit "A", and that the facts stated in it are true.

Marolf Environmental:	**City of St. Pete Beach:**
Signature: _____	Signature: _____
By: Tim Norwood	By: Frances Robustelli
Its: Authorized Agent	Its: City Manager
Date: [_____]	Date: [_____]
APPROVED AS TO FORM AND LEGAL SUFFICIENCY:	ATTEST:
_____ Ralf Brookes City Attorney	_____ Renee Rose City Clerk

EXHIBIT "A"

Standard Contract Addendum

(Place Standard Contract Addendum behind this page)

CITY OF ST. PETE BEACH, FLORIDA
STANDARD CONTRACT ADDENDUM

THIS STANDARD CONTRACT ADDENDUM is made and entered into this _____ day of _____, 2026, by and between the CITY OF ST. PETE BEACH, a Florida municipality, hereinafter referred to as the "City", and _____, hereinafter referred to as "Contractor", concerning that certain agreement dated the ____ day of _____, 2026 ("Agreement") and titled _____.

WITNESSETH:

WHEREAS, Section 119.0701, Fla. Stat., requires that certain public agency contracts must include certain statutorily required provisions concerning the contractor's compliance for Florida's Public Records Act; and

WHEREAS, Section 768.28, Fla. Stat., sets forth certain mandatory limitations on indemnification and liability for Florida public agencies; and

WHEREAS, Florida law requires that public agency contracts be subject to non-appropriation and thereby contingent upon appropriation during the public agency's statutorily mandated annual budget approval process; and

WHEREAS, Section 448.095, Fla. Stat., imposes certain obligations on public agencies with regard to the use of the E-Verify system by their contractors and subcontractors; and

WHEREAS, Section 287.133 and 287.135, Fla. Stat., provides restrictions on local governments contracting with companies that are on certain Scrutinized Companies lists or convicted vendor list; and

WHEREAS, additional terms required by Sections 282.3185(5) and (6) Fla. Stat. related to data management and Section 287.05701 Fla. Stat. related to social government and corporate activism are also added by virtue of this Addendum; and

WHEREAS, Section 286.101, Florida Statutes contains a list of "foreign countries of concern" including, the People's Republic of China, the Russian Federation, the Islamic Republic of Iran, the Democratic People's Republic of Korea, the Republic of Cuba, the Venezuelan regime of Nicolás Maduro, or the Syrian Arab Republic, including any agency of or any other entity under significant control of such "foreign country of concern". Any entity that does business with a state agency or political subdivision must disclose certain of their dealings with those "foreign countries of concern" to the Florida Department of Financial Services; and

WHEREAS, Section 787.06(13), Fla. Stat. provides that when a contract is executed, renewed, or extended between a nongovernmental entity and a governmental entity, the nongovernmental entity must provide the governmental entity with an affidavit signed by an

officer or a representative of the nongovernmental entity under penalty of perjury attesting that the nongovernmental entity does not use coercion for labor or services as defined in such statute;

NOW, THEREFORE, in consideration of the covenants set forth herein, the parties agree to this addendum as follows:

1. Amendment. This Addendum hereby amends and supplements the terms of the Agreement. In the event of a conflict between the terms of the Agreement and terms of the Addendum, the terms of the Addendum shall prevail.

2. Public Records Compliance. Contractor agrees that, to the extent that it may "act on behalf" of the City within the meaning of Section 119.0701(1)(a), Florida Statutes in providing its services under this Agreement, it shall:

(a) Keep and maintain public records required by the public agency to perform the service.

(b) Upon request from the public agency's custodian of public records, provide the public agency with a copy of the requested records or allow the records to be inspected or copied within a reasonable time at a cost that does not exceed the cost provided in this chapter or as otherwise provided by law.

(c) Ensure that public records that are exempt or confidential and exempt from public records disclosure requirements are not disclosed except as authorized by law for the duration of the contract term and following completion of the contract if the contractor does not transfer the records to the public agency.

(d) Upon completion of the contract, transfer, at no cost, to the public agency all public records in possession of the contractor or keep and maintain public records required by the public agency to perform the service. If the contractor transfers all public records to the public agency upon completion of the contract, the contractor shall destroy any duplicate public records that are exempt or confidential and exempt from public records disclosure requirements. If the contractor keeps and maintains public records upon completion of the contract, the contractor shall meet all applicable requirements for retaining public records. All records stored electronically must be provided to the public agency, upon request from the City's custodian of public records, in a format that is compatible with the information technology systems of the City.

(e) Pursuant to Section 119.0701(2)(a), Fla. Stat., **IF THE CONTRACTOR HAS QUESTIONS REGARDING THE APPLICATION OF CHAPTER 119, FLORIDA STATUTES, TO THE CONTRACTOR'S DUTY TO PROVIDE PUBLIC RECORDS RELATING TO THIS AGREEMENT, CONTACT THE CUSTODIAN OF PUBLIC RECORDS AT:**

Renee Rose
City Clerk/Public Records Custodian
cityclerk@stpetebeach.org

Phone: 727-363-9220
155 Corey Avenue
St. Pete Beach, FL 33706
Fax: 727-541-8040

3. Public Records Compliance Indemnification. Contractor agrees to indemnify and hold the City harmless against any and all claims, damage awards, and causes of action arising from the contractor's failure to comply with the public records disclosure requirements of Section 119.07(1), Florida Statutes, or by contractor's failure to maintain public records that are exempt or confidential and exempt from the public records disclosure requirements, including, but not limited to, any third party claims or awards for attorneys' fees and costs arising therefrom. Contractor authorizes the public agency to seek declaratory, injunctive, or other appropriate relief against Contractor in Pinellas County Circuit Court on an expedited basis to enforce the requirements of this section.

4. Compliance/Consistency with Section 768.28, Fla. Stat. Any indemnification or agreement to defend or hold harmless by City specified in the Agreement shall not be construed as a waiver of City's sovereign immunity, and shall be limited to such indemnification and liability limits consistent with the requirements of Section 768.28, Fla. Stat. and subject to the procedural requirements set forth therein. Any other purported indemnification by City in the Agreement in derogation hereof shall be void and of no force or effect.

5. Non-appropriation. City's performance and obligation to pay under this Agreement is contingent upon an appropriation during the City's annual budget approval process. If funds are not appropriated for a fiscal year, then the Contractor shall be notified as soon as is practical by memorandum from the City Manager or designee that funds have not been appropriated for continuation of the Agreement, and the Agreement shall expire at the end of the fiscal year for which funding has been appropriated. The termination of the Agreement at fiscal year end shall be without penalty or expense to the City subject to the City paying all invoices for services rendered during the period the Agreement was funded by appropriations.

6. E-Verify Compliance. By entering into this Agreement, the Contractor is obligated to comply with the provisions of Section 448.095, Fla. Stat. "Employment Eligibility," as amended from time to time. This includes but is not limited to register with and use the E-Verify System to verify the work authorization status of all newly hired employees, and requiring all subcontractors to provide an affidavit to Contractor attesting that the subcontractor does not employ, contract with, or subcontract with, an unauthorized alien. Contractor agrees to maintain a copy of such affidavit for the duration of this Agreement. Failure to comply with this paragraph will result in the termination of this Agreement as provided in Section 448.095, Fla. Stat., as amended and Contractor will not be awarded a public contract for at least one (1) year after the date on which the Agreement was terminated. Contractor will also be liable for any additional costs to the City as a result of the termination of this Agreement in accordance with this paragraph. Contractor affirmatively states, under penalty of perjury, that in accordance with Section 448.095, Fla. Stat., Contractor is registered with and uses the E-Verify system to verify the work authorization status of all newly hired employees, that in accordance with such statute, Contractor requires from each of its subcontractors an affidavit stating that the subcontractor does not employ, contract with, or

subcontract with an unauthorized alien, and that Contractor is otherwise in compliance with Sections 448.09 and 448.095, Fla. Stat.

7. Compliance/Consistency with Scrutinized Companies Provisions of Florida Statutes. Section 287.135(2)(a), Fla. Stat., prohibits a company from bidding on, submitting a proposal for, or entering into or renewing a contract for goods or services of any amount if, at the time of contracting or renewal, the company is on the Scrutinized Companies that Boycott Israel List, created pursuant to Section 215.4725, Fla. Stat., or is engaged in a boycott of Israel. Section 287.135(2)(b), Fla. Stat., further prohibits a company from bidding on, submitting a proposal for, or entering into or renewing a contract for goods or services over one million dollars ($1,000,000) if, at the time of contracting or renewal, the company is on either the Scrutinized Companies with Activities in Sudan List or the Scrutinized Companies with Activities in the Iran Petroleum Energy Sector List, both created pursuant to section 215.473, Fla. Stat., or the company is engaged in business operations in Cuba or Syria. Contractor hereby certifies that Contractor is not listed on any of the following: (i) the Scrutinized Companies that Boycott Israel List, (ii) Scrutinized Companies with Activities in Sudan List, or (iii) the Scrutinized Companies with Activities in the Iran Petroleum Energy Sector List. Contractor further hereby certifies that Contractor is not engaged in a boycott of Israel or engaged in business operations in Cuba or Syria. Contractor understands that pursuant to section 287.135, Fla. Stat., the submission of a false certification may subject Contractor to civil penalties, attorney's fees, and/or costs. Contractor further understands that any contract with City for goods or services of any amount may be terminated at the option of City if Contractor (i) is found to have submitted a false certification, (ii) has been placed on the Scrutinized Companies that Boycott Israel List, or (iii) is engaged in a boycott of Israel. And, in addition to the foregoing, if the amount of the contract is one million dollars ($1,000,000) or more, the contract may be terminated at the option of City if the company is found to have submitted a false certification, has been placed on the Scrutinized Companies with Activities in Sudan List or the Scrutinized Companies with Activities in the Iran Petroleum Energy Sector List, or has been engaged in business operations in Cuba or Syria.

8. Disclosure Requirements for "Foreign Countries of Concern". CONTRACTOR shall comply with the disclosure requirements set forth is Section 286.101 (3) (a), Fla. Stat., which requires "Any entity that applies to a state agency or political subdivision for a grant or proposes having a contract value of $100,000 or more shall disclose to the state agency or political subdivision any current or prior interest of, any contract with, or any grant or gift received from a "foreign country of concern" if such interest, contract, grant or gift received from a "foreign country of concern" if such interest, contract, grant or gift has a value of $50,000 or more and such interest existed at any time or such contract, grant or gift was received or in force at any time during the previous five (5) years. Such disclosure shall contain the name and mailing address of the disclosing entity, the amount of the gift or the value of the interest disclosed, the applicable "foreign country of concern" and, if applicable the date of termination of the contract or interest, the date of receipt of the grant or gift and the name of the agent or controlled entity that is the source or interest holder. Within one (1) year before applying for any grant or proposing any contract, such entity must provide a copy of such disclosure to the Department of Financial Services". Pursuant to Section 286.101(7), Fla. Stat.: "In addition to any fine assessed under [section 286.101(7)(a), F.S.], a final order determining a third or subsequent violation by an entity other than a state agency or political subdivision shall automatically disqualify the entity from

eligibility for any grant or contract funded by a state agency or any political subdivision until such ineligibility is lifted by the Administration Commission for good cause."

9. Venue and Jurisdiction. Notwithstanding any of other provision to the contrary, this Agreement and the parties' actions under this Agreement shall be governed by and construed under the laws of the State of Florida, without reference to conflict of law principles. As a material condition of this Agreement, each Party hereby irrevocably and unconditionally: i) consents to submit and does submit to the jurisdiction of the Circuit Court in and for Pinellas County, Florida for any actions, suits or proceedings arising out of or relating to this Agreement. Both parties waive any right to file an action, suit or proceeding in Federal Court or remove any action, suit or proceeding to Federal Court.

10. Attorneys' Fees and Costs. Notwithstanding any of other provision to the contrary, if litigation ensues regarding this Agreement, each party hereto shall bear its own attorneys' fee and costs.

11. Public Entities Crime or Convicted Vendor List. Contractor agrees and assumes a continuous duty to disclose to the City if the Contractor or any of its affiliates as defined by Section 287.133(1)(a), Florida Statutes are placed on the Convicted Vendor List or the Antitrust Violator Vendor List maintained by the Florida Department of Management Services.

12. Data Management; Notice of Breach. Contractor shall cooperate with the City and provide timely incident reporting, response activities/fact gathering, public and agency notification, severity level assessment, after-action reports, etc., which the City must report in accordance with Sections 282.3185(5) & (6), Florida Statutes in the event of a data breach.

13. Environmental and Social Government and Corporate Activism. The City has not given preference or requested documentation from the Contractor based on Contractor's social, political or ideological interest. Contractor agrees to similarly not request documentation or give preference to any subcontractor based on the subcontractor's social, political or ideological interests.

14. Taxes. The City shall not be liable for any taxes and assessments imposed by a federal, state or local governmental agency to the extent that the City is exempt from same by Florida law, including but not limited to any sales or use tax.

15. No coercion for labor or services. The Contractor swears under penalty of perjury that the Contractor does not use coercion for labor or services as defined as follows:

"Coercion" means:

1. Using or threatening to use physical force against any person;
2. Restraining, isolating, or confining or threatening to restrain, isolate, or confine any person without lawful authority and against her or his will;
3. Using lending or other credit methods to establish a debt by any person when labor or services are pledged as a security for the debt, if the value of the labor or services as reasonably assessed is not applied toward the liquidation of the debt, the length and nature of the labor or services are not respectively limited and defined;

4. Destroying, concealing, removing, confiscating, withholding, or possessing any actual or purported passport, visa, or other immigration document, or any other actual or purported government identification document, of any person;

5. Causing or threatening to cause financial harm to any person;

6. Enticing or luring any person by fraud or deceit; or

7. Providing a controlled substance as outlined in Schedule I or Schedule II of Sec. 893.03, Fla. Stat. to any person for the purpose of exploitation of that person.

16. Force Majeure. The City reserves the right to suspend, modify or terminate this contract in the event of an act of god or act of man beyond the control of the parties, including but not limited to a hurricane, tropical storm, tornado, or other destructive weather event, flooding, pandemic, plague, war, armed conflict, domestic or foreign terrorism, riot, labor condition, state or federal governmental action, and catastrophic Internet disturbance, making performance inadvisable, economically impracticable, illegal, or impossible.

17. Additional Terms. Notwithstanding any of other provision to the contrary, the parties agree as follows:

A. None.

IN WITNESS WHEREOF, the parties hereto have executed and delivered this instrument on the days and year indicated below and the signatories below to bind the parties set forth herein.

Under penalties of perjury, and pursuant to Sec. 92.525, Fla. Stat., Contractor declares that Contractor has read the foregoing Section 15 above and that the facts stated in it are true.

Contractor:

_____

Print Name: _____

Title: _____

Company: _____

ATTEST:

_____
Renee Rose, City Clerk

City of St. Pete Beach:

_____
Frances Robustelli, City Manager

EXHIBIT "B"

Request for Bid/Proposal

(Place Request for Bid/Proposal behind this page)



City of St Pete Beach
Request for Bid

Wastewater Lift Stations Rehabilitation

Bids due on or before
04/15/2026 at 9:00 AM EST(Deadline)
Electronically Via Bonfire Only

Table of Contents

I. CONTRACTOR'S BID SUBMITTAL 3

II. BID FORM 4

III. GENERAL CONTRACT TERMS 5

IV. REFERENCES & MINIMUM QUALIFICATIONS 25

V. PUBLIC ENTITY CRIMINAL AFFIDAVIT 26

VI. NON-COLLUSION AFFADAVIT 28

VII. SPECIFICATIONS 29

Event	Date	Time
Publication of Bid	03/18/2026	8:00 AM
Pre-Bid Meeting	03/25/2026	11:00 AM
Deadline for Question Submission	04/01/2026	10:00 AM
Bid Receiving Deadline	04/15/2026	9:00 AM
Bid Opening	04/15/2026	11:00 AM

I. CONTRACTOR'S BID SUBMITTAL

The company that is submitting a bid declares that it has extensive experience in **Wastewater Lift Stations Rehabilitation.**

The undersigned, as Bidder, hereby declares that the only person or persons interested in the Bid as principal or principals are named herein, and that no person other than herein mentioned has any interest in the Bid or in the Agreement to be entered into; that this Bid or Agreement is made without connection with any other person, company, or parties making a Bid; and that it is in all respects fair and in good faith without collusion or fraud.

The Bidder further declares that they have examined the site of the work and informed themselves fully in regard to all conditions pertaining to the place where the work is to be done; that they have examined the Plans and Specifications for the work and Contract Documents relative thereto, and have read all special provisions furnished prior to the opening of bids; and that they have satisfied themselves relative to the materials to be supplied and work to be performed.

The Bidder proposes and agrees, if the Bid is accepted, to contract with the City of St. Pete Beach, Florida, in the form of an Agreement specified for **"Wastewater Lift Stations Rehabilitation"** in St. Pete Beach, Florida, in full and complete accordance with the shown, noted, described, and reasonably intended requirements of the Plans, Specifications, and Contract Documents, to the full and entire satisfaction of the City of St. Pete Beach, Florida.

The Bidder proposes to furnish all materials, equipment, labor, and perform the work submitted in their bid schedule for the City of St. Pete Beach **" Wastewater Lift Stations Rehabilitation."**

COMPANY: _____ DATE: _____

ADDRESS: _____ PHONE: _____

BIDDER: _____ NAME: _____
(SIGNATURE) *(PRINT NAME & TITLE)*

STATE OF FLORIDA
COUNTY OF _____

The foregoing instrument was sworn to (or affirmed), subscribed, and acknowledged before me **by means of ☐ physical presence or ☐ online notarization**, this _____ day of

_____, 2026, by _____, who is personally

known to me or has produced _____ as identification.

(SEAL)

_____
Notary Public – State of Florida

_____
(Print, Type, Stamp, or Commissioned
Name of Notary Public)

SUBMIT BID TO:

Electronically via Bonfire Only

II. Bid Form

BID FORM CITY OF ST. PETE BEACH PUMP & LIFT STATION REHABILITATIONS - PID# PS26-401-608-00					
ITEM	**DESCRIPTION**	**EST. QTY.**	**U/M**	**BID PRICE PER UNIT ($)**	**TOTAL BID PRICE ($)**
I. MISCELLANEOUS					
1	Mobilization	1	LS		-
2	Maintenance of Traffic	1	LS		-
3	Erosion and Sediment Control	1	LS		-
4	Bypass Pumping	1	LS		
5	Project Record Documents (As-Builts + O&M)	1	LS		-
				SUBTOTAL	-
II. LS #04 REHABILITATION					
6	Cleaning Existing Valve Vault Including Removal of Debris and Sand Blasting and Recoating of Existing Fittings	1	LS		-
7	Electrical Equipment Rack Including Pump Control Panel (5 HP - 7.5 HP), Meter, Main Disconnect, Automatic Transfer Switch, Junction Box, and Relocation of SCADA Panel	1	LS		-
9	Elevated Platform	1	LS		-
10	Backup Generator, Enclosure, and Sub-Base Fuel Tank	1	LS		-
11	Site Lighting	1	LS		-
12	6 Feet Tall Vinyl Privacy Fence	100	LF		-
13	6 Feet Tall, 4 Feet Wide Vinyl Privacy Access Gate	1	LS		
14	Curb Installation	70	LF		-
15	Potable Water Service and Hose Bib Relocation	1	LS		-
16	Demolition	1	LS		-
24	Shell Restoration	20	CY		-
				SUBTOTAL	-
III. LS #05 REHABILITATION					
6	Cleaning Existing Valve Vault Including Removal of Debris and Sand Blasting and Recoating of Existing Fittings	1	LS		-
17	Electrical I&C (5 HP - 7.5 HP Pump Control Panel Replacement)	1	LS		-
				SUBTOTAL	-
V. LS #09 REHABILITATION					
6	Cleaning Existing Valve Vault Including Removal of Debris and Sand Blasting and Recoating of Existing Fittings	1	LS		-
17	Electrical I&C (5 HP - 7.5 HP Pump Control Panel Replacement)	1	LS		-
				SUBTOTAL	-
VI. LS #10 REHABILITATION					
6	Cleaning Existing Valve Vault Including Removal of Debris and Sand Blasting and Recoating of Existing Fittings	1	LS		-
19	Clean Wetwell Including Sand/Debris Pump Out	1	LS		-
20	2" S.S. Air Release Valve (Above Ground)	1	LS		-
21	Force Main Detectable Warning Tape Replacement	35	LF		-
8	Electrical Equipment Rack Including Pump Control Panel (12 HP with VFD), Meter, Main Disconnect, Automatic Transfer Switch, Junction Box, and Relocation of SCADA Panel	1	LS		-
9	Elevated Platform	1	LS		-
10	Backup Generator, Enclosure, and Sub-Base Fuel Tank	1	LS		-
11	Site Lighting	1	LS		-
12	6 Feet Tall Vinyl Privacy Fence	125	LF		-
22	6 Feet Tall, 12 Feet Wide Vinyl Privacy Double Gate	1	LS		-
23	Reclaimed Water Service and Hose Bib Relocation	1	LS		-
16	Demolition	1	LS		-
				SUBTOTAL	-
VII. LS #11 REHABILITATION					
6	Cleaning Existing Valve Vault Including Removal of Debris and Sand Blasting and Recoating of Existing Fittings	1	LS		-
19	Clean Wetwell Including Sand/Debris Pump Out	1	LS		-
17	Electrical I&C (5 HP - 7.5 HP Pump Control Panel Replacement)	1	LS		-
				SUBTOTAL	-
VIII. LS #12 REHABILITATION					
6	Cleaning Existing Valve Vault Including Removal of Debris and Sand Blasting and Recoating of Existing Fittings	1	LS		-
17	Electrical I&C (5 HP - 7.5 HP Pump Control Panel Replacement)	1	LS		-
				SUBTOTAL	-
IX. LS #13 REHABILITATION					
6	Cleaning Existing Valve Vault Including Removal of Debris and Sand Blasting and Recoating of Existing Fittings	1	LS		-
17	Electrical I&C (5 HP - 7.5 HP Pump Control Panel Replacement)	1	LS		-

				SUBTOTAL	-
X. LS #14 REHABILITATION					
6	Cleaning Existing Valve Vault Including Removal of Debris and Sand Blasting and Recoating of Existing Fittings	1	LS		-
17	Electrical I&C (5 HP - 7.5 HP Pump Control Panel Replacement)	1	LS		-
				SUBTOTAL	-
XI. LS #15 REHABILITATION					
6	Cleaning Existing Valve Vault Including Removal of Debris and Sand Blasting and Recoating of Existing Fittings	1	LS		-
17	Electrical I&C (5 HP - 7.5 HP Pump Control Panel Replacement)	1	LS		-
				SUBTOTAL	-
XII. SW LS #35 REHABILITATION					
18	Electrical I&C (35 HP Pump Control Panel Replacement with Soft Starter)	1	LS		-
				SUBTOTAL	-
				I. MISCELLANEOUS	-
				II. THROUGH XII. LS REHABILITATION	-
				BID TOTAL	-

III. GENERAL CONTRACT TERMS

REQUEST FOR BID

The City of St. Pete Beach is submitting this RFB for bids on the Wastewater Lift Stations Rehabilitation.

LOCATIONS

The City of St. Pete Beach is soliciting bids for Wastewater Lift Stations Rehabilitation within the City of St. Pete Beach. Access to the work sites shall be over streets, and walkways. Any damage to existing pavement surface and base or other surface improvements outside the Contract Pay Limits, attributable to the Contractor's activities, shall be restored to like-new condition by the Contractor at the Contractor's expense.

BID SUBMITTALS

Bid documents must include a signed/notarized Contractor's Bid Submittal, Bid Form, References, Contractor's license and insurance certificates, and Public Entity Criminal Affidavit. The Contractor shall submit one electronic bid via Bonfire.

BIDDER INFORMATION

The City is not responsible for any Addendums or other supplementary information that is not received due to non-submittal of the aforementioned information. Please refer back to the city website (http:// www.stpetebeach.org/news-and-links/city-projects.html) for additional project information as it becomes available. The City reserves the right to decide whether to answer addendums or not. The City is not required to provide any additional information.

PRE-BID MEETING

An optional pre-bid meeting will be held on **03/25/2026 at 11:00 AM EST** via Microsoft Teams Video conference/Teleconference. Please contact the City's Procurement Manager (purchasing@stpetebeach.org) for a meeting invitation and Microsoft Teams Meeting instructions.

WRITTEN REQUESTS FOR INTERPRETATIONS/CLARIFICATIONS

No oral interpretations will be made to any firms as to the meaning of the scope of work or any other contract documents included in this **RFB.** All questions pertaining to the terms and conditions or scope of work of this Request for Bid **(RFB)** must be sent in writing only via email to the City Procurement Manager (purchasing@stpetebeach.org) and shall be received no later than **10:00 EST on 04/01/2026**. Responses to questions may be handled as an Addendum if the response would provide clarification to the requirements of the **RFB**. All such Addenda shall become a part of the contract documents. The City will not be responsible for any other explanation or interpretation of the proposed **RFB** made or given prior to the award of the contract. The City will not respond to questions received after the specified deadline. The City reserves the right to respond to any and all questions but is not required to do so.

BID PACKAGES

Sealed bids will be accepted by the City until **04/18/2026** at **9:00 AM** EST (Deadline). No bids shall be accepted by the City after this deadline – NO EXCEPTIONS. Bid Packages must be electronically submitted via Bonfire Clearly marked as: "**Wastewater Lift Stations Rehabilitation**." If a link is needed for either site, please contact the Procurement Manager (purchasing@stpetebeach.org.) All Bidders are invited to attend this bid opening.

CONTACT INFORMATION

Sara Spain – Procurement Manager
Mailing Address - 155 Corey Avenue, St. Pete Beach, Florida 33706
E-mail - purchasing@stpetebeach.org

SCOPE OF WORK

The City of St. Pete Beach is soliciting bids for Wastewater Lift Stations Rehabilitation within the City of St. Pete Beach. Access to the work sites shall be over streets, and walkways. Any damage to existing pavement surface and base or other surface improvements outside the Contract Pay Limits, attributable to the Contractor's activities, shall be restored to like-new condition by the Contractor at the Contractor's expense.

Access to the work sites shall be over streets, and walkways. Any damage to existing pavement surface and base or other surface improvements outside the Contract Pay Limits, attributable to the Contractor's activities, shall be restored to like-new condition by the Contractor at the Contractor's expense.

The nearest addresses for the lift station rehabilitations are shown below:

Lift Station #	Nearest Address:
LS #4	1901 Pass-a-Grille Way, St. Pete Beach, FL 33706
LS #5	600 Pass-a-Grille Way, St. Pete Beach, FL 33706
LS #9	1360 Boca Ciega Isle Drive, St. Pete Beach, FL 33706
LS #10	7398 Sunset Way, St. Pete Beach, FL 33706
LS #11	490 82nd Avenue, St. Pete Beach, FL 33706
LS #12	401 93rd Avenue, St. Pete Beach, FL 33706
LS #13	5411 Pali Way, St. Pete Beach, FL 33706
LS #14	500 64th Avenue, St. Pete Beach, FL 33706
LS #15	650 56th Avenue, St. Pete Beach, FL 33706
SW LS #35	208 Pass-a-Grille Way, St. Pete Beach, FL 33706

Please see Technical Specifications at the end of this document, VII. Specifications.

SCHEDULE

Maintenance, cleaning and inspection shall be scheduled per occurrence and may include the full asset inventory or a portion of that inventory for each cycle. Maintenance cycles are to be performed quarterly, or more frequently as-needed, based on City requirements.

Tidal check valve, manatee grate, and other miscellaneous outfall repairs shall be scheduled per occurrence, as-needed.

The Contractor must provide at least 72 hours' notice for scheduling changes. Emergency response for unscheduled maintenance requests must be available within 24 hours.

PERFORMANCE METRICS

The following performance metrics will be used to evaluate the Contractor's work:

- Timeliness of completing tasks as per the agreed schedule.
- Accuracy and thoroughness of written condition reports.
- Compliance with safety standards and regulations.
- Responsiveness to unscheduled maintenance requests.

All reports must be submitted in a digital format (PDF or Word) within ten (10) days of completing each maintenance cycle. Reports should include:

- Detailed descriptions of completed tasks.
- Photographic and video evidence.
- Identified issues and recommendations for future maintenance.

PENALTIES

Failure to adhere to the schedule or meet performance standards may result in penalties, including:

- 5% reduction in payment for delayed work (per day).
- Rework at Contractor's expense for substandard services.

EMERGENCY SERVICES

The Contractor must provide emergency maintenance services within 24 hours of the City's request. The bid form includes an emergency call-out fee to account for this service.

Once a contract is awarded, the selected vendor will be required to submit a detailed fee schedule outlining the main pay items for the project. This fee schedule will be reviewed at the pre-construction meeting and will be used to review pay applications and evaluate project progress.

DETAILED SPECIFICATIONS

LOCATIONS

The locations will cover the above listed addresses for the lift stations under "Scope of Work."

Standard work hours shall be from 7:30 AM until 6:00 PM, Monday through Saturday. No work shall take place on Sundays or on official City holidays without prior approval by the City Manager or designee at least 1 week prior to the scheduled work. A list of current official City holidays can be found on the City's Human Resources website at http://www.stpetebeach.org/hr/holidays.html. Contractor will coordinate scheduling of work with the City's Project Manager and City's Inspector.

ADDITIONAL WORK DETAILS

Contractors or persons wishing to bid on this project are licensed, bondable and insured in accordance to the City's requirements. The Contractor will furnish all necessary labor, materials, tools, equipment and supplies to complete the scope of work. Bid must also include all costs for licenses, permits, and any material disposal fees.

Bidders shall bring questions, discrepancies, omissions, conflicts or doubt as to meaning of any part of Contract Documents to the attention of the City of St Pete Beach Procurement Manager at least ten (10) business days before bid submittal deadline. Clarification of intent of Contract Documents, if necessary, shall be made available to bidders in the form of an Addendum. Failure to request clarification of interpretation of Contract Documents shall not relieve bidders of their responsibilities to perform the work.

The City of St. Pete Beach reserves the right to reject any or all bids or parts of bids, or accept any bid or part thereof deemed to be in the best interests to the City of St. Pete Beach.

STATEMENT OF WORK

The Contractor shall furnish and pay the cost, including sales tax and all other applicable taxes, licenses, permits and fees, of all the necessary materials not furnished by the City and shall furnish and pay for all

the superintendence, labor, tools, equipment, transportation, and perform all the work required for the execution of all services listed in the Bidder's Proposal and Bid Form attached hereto and in strict accordance with the Plans, Specifications, and requirements of the City of St. Pete Beach which are attached hereto and made a part hereof, and any amendments thereto and such supplemental Plans and Specifications which may hereafter be approved.

BEGINNING DATE

The Contractor shall, within ten (10) business days after receipt of the Notice of Award and before commencement of any operations hereunder, execute the Agreement. Additionally, the Contractor shall, within twenty (20) business days after receipt of the Notice of Award, provide all required documentation to the City. The Contractor must commence construction activities within thirty (30) business days of NTP to prepare and procure materials. Any change to the start date or the work schedule included with this bid must be submitted in writing to and approved by the City Manager or designee.

COMPLETION OF WORK

The work will be completed on an as-needed basis. Each location that needs to be surveyed, repaired and/or worked on will constitute it's own "job". The contract will be for (3) three years from time of execution (Date of last signature) of the contract with (2) additional (1) one year extensions if agreed upon by the City and vendor. .

EXAMINATION OF SITE

Bidders may visit specific areas with advanced notice.

ASSURANCES

The responding Contractor shall provide a statement of assurance that the Contractor is not presently in violation of any statutes or regulatory rules that might have an impact on the firm's operations. All applicable laws and regulations of the State of Florida, and ordinances and regulations of the City of St. Pete Beach will apply.

TRAFFIC CONTROL AND STAGING AREA

Contractor shall include all costs associated with vehicular and pedestrian traffic control and maintenance during the project. Contractor shall be responsible for providing a staging area. The location of this area must be approved by the City Manager or designee. The Contractor will be required to control the area including any additional fencing or barricades and Contractor will be responsible for the restoration of this and all other staging areas provided by the City.

ASSIGNMENT AND TRANSFER OF CONTRACT

The Contractor shall not assign or transfer this Agreement or any part thereof or any interest therein without consent in writing of the City and the Contractor's Surety, and any such assignment or transfer without such written consent shall be null and void.

SUBCONTRACTS

The Contractor shall not subcontract this Agreement or any part thereof or any interest therein without consent in writing of the City and the Contractor's Surety. Any Subcontractor approved by the City will be subject to the same standards and qualifications as stated in this Contract.

PERFORMANCE PAYMENT BOND

Not required for this contract.

LIQUIDATED DAMAGES

If the work embraced by this Contract is not completed on or before the date set for completion or any extension thereof, the actual damages for the delay will be impossible to determine and in lieu thereof, the Contractor shall pay to the City fixed, agreed, and liquidated damages in the amount of either Five-Hundred Dollars ($500) per day for each calendar day of delay until the work is satisfactorily completed.

PAYMENT

Payment shall be made to the Contractor for work performed under this Contract for the quantities of work as determined in accordance with Payments for Work Completed and Payments Withheld of this Contract. Payment for extra work will be made in accordance with the Changes in Work, Contract Amount, and Contract Time sections below.

CHANGES IN THE WORK

Without invalidating the Contract, the City may, at any time or from time to time, order additions, deletions or revisions in the work authorized by written Change Orders or directives. Upon receipt of a Change Order, the Contractor will proceed with the work involved. All such work shall be executed under the applicable conditions of the Contract documents. If any Change Order causes an increase or decrease in the Contract Amount or any extension or shortening of the Contract Time, an equitable adjustment will be made.

Additional Work performed by the Contractor without authorization of a Change Order will not entitle them to an increase in the Contract Amount or any extension of the Contract Time, except in the case of an emergency (subject to approval by City Manager or designee).

It is the Contractor's responsibility to notify their Surety of any changes affecting the general scope of the Work or change of the Contract Amount and the amount of the applicable bonds shall be adjusted accordingly, and an amended bond document furnished to the City. In the event the City directs the Contractor to make a change in the Work, and if the City and the Contractor do not arrive at a mutually acceptable increase or decrease in the Contract Amount, the contractor shall not use any such lack of mutual acceptance as a basis or cause to stop or otherwise delay the progress or the execution and completion of any of the work ordered, directed or required pursuant to the Contract Documents.

If the Contractor believes an event or situation has occurred which justifies a change in the Contract Amount or Contract Time, he shall deliver a written notice to the City Manager or designee. Each such written notice shall be delivered promptly and no later than fifteen (15) business days after the Contractor first discovered the occurrence. The Contractor shall be deemed to have waived the right to collect any and all costs incurred more than fifteen (15) business days prior to the date of delivery of the written notice and shall be deemed to have waived the right to seek an extension of the Contract Time with respect to any delay in the Progress Schedule which accrued more than fifteen (15) business days prior to the date of delivery of the written notice.

Any such notice shall include sufficient detail to explain the basis of entitlement to a claim for an adjustment to the Contract Amount of Contract Time. When requested by the City Manager or designee, the Contractor shall furnish any additional information and details as may be required to determine the facts or allegations involved, which shall be provided within fifteen (15) business days of the request unless a longer time period is allowed by the City Manager or designee.

The Contractor shall prepare bids detailing proposed adjustments to Contract Amount and/or Contract Time and submit them to the City Manager or designee within fifteen (15) business days of the City's issuance of a proposed Change Order or the Contractor's submitting a written notice of a change or claim for an adjustment to the Contract Amount or Contract Time. Contractor's bids shall be irrevocable for a period of at least sixty (60) business days after receipt by the City. Any delay in the submittal of a complete, adequate and acceptable bid will not justify an increase in Contract Amount or Contract Time. Contractor agrees that it shall give the City access to any and all of Contractor's and Subcontractors' books, records and other materials relating to proposed Change Orders and other claims for adjustment to Contract Amount or Contract Time.

CHANGE OF CONTRACT AMOUNT

The Contract Amount constitutes the total compensation payable to the Contractor for performing the Work. All duties, responsibilities and obligations assigned to or undertaken by the Contractor shall be at his expense without change in the Contract Amount. The Contract Amount may only be changed by written Change Order issued by the City. Any claim for an increase in the Contract Amount shall be in writing and delivered to the City Manager or designee within fifteen (15) business days of the occurrence of the event giving rise to the claim.

All claims for adjustment in the Contract Amount shall be determined by the City Manager or designee. However, no claim for an adjustment to the Contract Amount will be considered for unforeseeable causes that were beyond the fault or negligence of the Contractor or his Subcontractors or supplier such as acts of God, floods, riots, etc. This restriction does not restrict submission of claims for additional Contract Time due to events of this nature. Any change in the Contract Amount shall be incorporated in a Change Order.

Contractor bids or claims shall cover all aspects of the Work involved and shall be fully documented and itemized as to all costs, quantities and charges for overhead and profit. Amounts for Subcontractors or Suppliers at any tier shall be similarly supported. When determining Subcontractors' costs, the methods to

be used shall be those used for the Contractor's costs, except that the term "Subcontractor" shall replace the term "Contractor," context permitting.

Changes in Contract Amount for extensions in Contract Time shall exclude costs that are unaffected or do not relate to the extension in Contract Time, such as: (a) operating costs of construction equipment assigned to the Work on a continuing basis, (b) operating costs and owned/rental costs of construction equipment (crane used for specific lifts, concrete pump used for specific pours, etc.), and (c) fully paid site facilities, tools, etc.

The value of any Work covered by a Change Order or of any claim for an increase or decrease in the Contract Amount where the Work involved is covered by unit prices contained in the Contract Documents shall be determined by application of unit prices to the quantities of the items involved. If the quantities originally contemplated are so changed in a proposed Change Order, that application of the Unit Prices to the quantities proposed will cause substantial inequity to the City or the Contractor, the applicable unit price(s) shall be equitably adjusted by mutual agreement.

If the value of work covered by a Change Order cannot be established or mutually agreed to utilizing previously established unit rates, the value shall be determined by the City on the basis of an estimate of the out-of-pocket cost and percentages that are acceptable to the City for overhead and profit. The out-of-pocket cost shall only include those direct costs which are needed to perform the work such as labor (including payroll taxes, fringe benefits, labor burden and workers' insurance), materials, equipment, and other incidental out-of-pocket construction costs directly involved in the work, including but not limited to small tools, expendables and material costs but shall not include project management or project supervisory costs unless the Change Order includes an increase in the Contract time.

In such case, the Contractor will submit in the form prescribed by the City an itemized cost breakdown together with supporting data.

The amount of credit to be allowed by the Contractor to the City for any such change which results in a net decrease in cost, will be the amount of the actual net decrease as determined by the City. When both additions and credits are involved in any one change, the combined overhead and profit shall be figured on the basis of the net increase, if any.

To be eligible for consideration, the Contractor's written claim for a change in the Contract price, including claim(s) from sub-contractors, shall include an itemized cost breakdown with supporting data as described below:

A. For labor: Provide written documentation from the Contractor and Subcontractors or others as appropriate in the form of a detailed breakdown by each labor classification involved indicating the number of hours of Work involved and the hourly payroll rate applicable to each to substantiate the basis and amount of the direct labor cost. The direct labor cost may be increased to provide an allowance for indirect payroll costs (labor burden), such as payroll taxes, fringe benefits, and workers insurance after all premium discounts, rebates and other appropriate reductions have been taken.

B. For material, supplies, equipment, furnishings, etc., to be installed or included in the Work: Provide written documentation from the Contractor and Subcontractors, suppliers, etc., to substantiate the basis and amount of the various cost items involved. Material costs shall reflect the Contractor's reasonably anticipated net actual cost after consideration of trade discounts and volume rebates.

C. For construction equipment: Provide written documentation in the form of a detailed breakdown by each construction equipment category, indicating the applicable unit rates (i.e., dollar amount per hour, dollar amount per day etc.,) and the number of hours, days, etc. to substantiate the basis and amount of the construction equipment out-of-pocket costs.

CHANGE OF CONTRACT TIME

The Contract Time may only be changed by written Change Order. Any claim for an extension in the Contract Time shall be in writing and include an analysis of the Progress Schedule as further described in the Specifications and shall be delivered to the City Manager or designee within fifteen (15) business days of the occurrence of the event giving rise to the claim. All claims for adjustment in the Contract Time shall be determined by the City Manager or designee. Any change in the Contract Time resulting from any such claim shall be incorporated in a Change Order. The Contract Time may be extended for an amount equal to time lost due to unforeseeable causes beyond the control of the Contractor (and his Subcontractors and Suppliers) if he makes a claim therefrom. Such delays shall include, but not be restricted to, acts or neglect by any separate Contractor employed by the City; fires; floods; labor disputes; epidemics; or acts of God.

All time limits stated in the Contract Documents are of the essence to the Contract. The stated time limits are agreed to be adequate to complete the work, including the procurement, manufacture and delivery of all material and equipment required, and account for any and all potential impact, delays, disruptions and costs that may be expected.

CITY'S RIGHT TO DIRECT PURCHASE

The City has reserved the right to purchase certain items and materials for this project directly in an effort to save applicable sales tax in compliance with Florida Law.

The City will issue purchase orders directly to the vendors supplying the equipment being directly purchased by the City for this project. Each Purchase Order will be accompanied by the City's Certificate of Exemption and a Certificate of Entitlement. All direct purchase vendor invoices will be issued to the City of St. Pete Beach, and the City will issue payment to each direct purchase vendor from City funds. The City will take title to the equipment at time of delivery from the vendor and will issue a separate Certificate of Entitlement for each purchase order.

The Contractor shall assist the City with receipt of materials furnished by the City in accordance with these Special Provisions including, but not limited to, verifying correct quantities, verifying documents of orders in a timely manner, providing and obtaining all warranties and guarantees required by the Contract Documents, assist with inspection of the goods at the time of delivery and notify the City immediately of any deficiencies noted. It is understood that the owner assumes the risk of damage or loss during the time that the building materials are physically stored at the job site prior to their installation or incorporation into the project. The Contractor shall coordinate with the City regarding the delivery schedules, sequence of delivery, loading orientation, and other arrangements normally required by the Contractor for the particular material furnished.

As City Furnished Materials are delivered to the job site and accepted by the City, the City shall notify the Contractor who will assist the City to visually inspect all shipments from the suppliers. The City will approve the vendor's invoice for material delivered upon adequate inspection and recommendation of the Contractor. The City shall assure that each delivery of City Furnished Materials is accompanied by documentation adequate to identify the Purchase Order against which the purchase is made and Contract Documents including but not limited to Contract, Plans, Specifications, and approved Shop Drawings. This documentation may consist of a delivery ticket, bill of lading and an invoice from the supplier conforming

to the Purchase Order together with such additional information as the City may deem necessary.

PAYMENTS FOR WORK COMPLETED

Partial payments will be made as the work progresses (if applicable) at the end of each calendar month, or as soon thereafter as practicable on estimates made by the City Manager or designee and as approved by the City, provided that the Contractor is performing the overall job in a diligent manner. In making partial payments, there shall be retained five percent (5%) on the amount of each estimate until final completion and acceptance of all work covered by the Contract. Upon completion and acceptance of the work, the City Manager or designee shall issue a certificate that the work has been completed and accepted by them under the conditions of the Contract and shall make and approve the final estimate of the work. The entire balance found to be due the Contractor, including that retained by the City, should be paid to the Contractor. Such payment shall be conditioned, however, upon the submission by the Contractor of evidence satisfactory to the City that all claims for labor, material, and any other outstanding indebtedness in connection with the Contract have been paid. Such payment shall also be conditioned upon approval and acceptance of the construction and improvements by the City.

If after the work has been substantially completed, full completion thereof is materially delayed through no fault of the Contractor and the City Manager or designee so certifies, the City shall upon the Certificate of the City Manager or designee, and without terminating the Contract make payment for the balance due for that portion of the work fully completed and accepted. Such payment shall be made under the terms and conditions governing final payment, except that it shall not constitute a waiver of claim. If such delay occurs and payment is made under this clause, the Contractor shall nevertheless be prepared to complete the work in a timely manner upon the remedy or removal of such delay, and shall be bound under this Contract for the completion of such work unless this Contract is otherwise terminated. All payments will be made in accordance with the Local Government Prompt Payment Act, Chapter 218, Florida Statutes.

PAYMENTS WITHHELD

The City Manager or designee may withhold, or, on account of subsequently discovered evidence, nullify the whole or part of any estimate to such extent as may be necessary to protect the City from loss on account of:

a) Defective work not remedied

b) Claims and/or liens filed or reasonable evidence indicating probable filing of claims

c) Failure of the Contractor to make payments properly to Subcontractors or for material or labor

d) A reasonable doubt that the Contract can be completed for the balance then unpaid

e) Damage to another Contractor

f) Failure of the Contractor to keep their work progressing in accordance with their time schedule

FINAL PAYMENTS

Upon the completion and acceptance of the work, the City Manager or designee shall issue a certificate that designates that the whole work provided for in this Contract has been completed and accepted by him under the conditions and the terms thereof and shall make the final estimate of the work. After issuance of the certificate, the entire balance found to be due the Contractor, including said retained percentage by the City in accordance with existing state laws as may be retained lawfully by said City, shall pay excepting such

sums to the Contractor.

Before the approval of the final payment, the Contractor shall submit evidence satisfactory to the City that states that all payrolls, materials, bills and outstanding indebtedness in connection with this Contract have been paid.

LIENS

If at any time there shall be evidence of any lien or claim for which the City might become liable and which is chargeable to the Contractor, the City shall have the right to retain out of any payment then due or thereafter to become due, an amount sufficient for complete indemnification against such lien or claim. In the event the City has already paid to the Contractor all sums due under this contract or the balance remaining unpaid is insufficient to protect the City, the Contractor and his Surety shall be liable to the City for any loss so sustained.

RESPONSIBILITY OF THE CITY MANAGER OR DESIGNEE

The term "City Manager or designee" wherever used in the Contract shall be the City of St. Pete Beach or its duly authorized representative. Notices of any change in the City Manager or designee shall be given in writing by the City to the Contractor. The City Manager or designee shall have full authority to interpret the Plans and Specifications and shall determine the amount, quality, and acceptance of the work and supplies to be paid for under the Contract and every question relative to the fulfillment of the terms and provisions therein. It shall be the duty of the City Manager or designee to enforce the Plans and Specifications in a fair and unbiased manner. If a variation from any requirements is allowed the City Manager or designee shall grant the same in writing with the reasons for his action outlined, and such action will not invalidate or change the Contract in any other manner.

INTENT OF PLANS AND SPECIFICATIONS

The Contractor shall keep on the job a copy of the Plans and Specifications and shall at any time give the City Manager or designee access thereto. Anything mentioned in the Specifications and not shown on the Plans or shown on the Plans and not mentioned in the Specifications, shall be of like effect as if shown or mentioned in both. The Contractor shall not take advantage of any errors, discrepancies or omissions that may exist in the Plans and Specifications but shall immediately call them to the attention of the City Manager or designee whose interpretation or correction thereof shall be conclusive. Should a conflict occur between the General Specifications and any Supplemental Specifications and/or Plans, the latter shall govern.

LICENSES AND PERMITS

The Contractor shall obtain and pay for all necessary City licenses and work permits and shall faithfully comply with all laws, ordinances and regulations, (Federal, State or local) which may be applicable to the operations to be conducted hereunder, except for those permits obtained by the City. Notwithstanding the provisions above, the contractor is responsible for non-compliance of all permit requirements, including all fines resulting from Contractor's non-compliance of said requirements.

Chapter II, Section II-4, "Registration of Licenses Obtained From Other Municipalities:" "Persons, partnerships, corporations, or other business entities doing business with the City who are not required to obtain a City occupational license, but who must have either a State or County or Municipal occupational license from another municipality, shall register such occupational license with St. Pete Beach Community Development Department. The City may charge a fee for such registration." The Contractor shall be

responsible for obtaining all City, County, State and Federal permits required by those government agencies and must provide documentation of receipt of those permits prior to project commencement. This shall include a notice to commence work letter and the applicable fee, if required. Any sub-contractor hired by the contractor awarded the project, MUST also register their license with the City.

SUPERINTENDENCE

The Contractor shall constantly superintend all the work embraced in this Contract in person or by a responsible agent who shall have in writing, full authority to act for them and to carry out all the instructions given by the City Manager or designee.

LABOR PROVISIONS

The Contractor and his Subcontractors shall discharge, whenever ordered to do so by the City Manager or designee, any employee who is disorderly or whose conduct in the opinion of the City Manager or designee is detrimental to the prosecution of the work. No person whose age or physical condition is such as to make this employment dangerous to his/her health and safety or to the health and safety of others shall be employed on the work, and in no event shall any persons under the age of sixteen (16) years be employed.

INSURANCE

The Contractor shall procure and maintain at his/her own expense, during the life of the Contract, liability insurance as hereinafter specified. All such insurance shall be subject to the approval of the City for adequacy of protection and shall include a provision preventing cancellation without twenty (20) business days prior notice to the City in writing. The City shall be included as an additional insured on all liability insurance. The liability insurance required is as follows: Contractor's General Public Liability and Property Damage Insurance issued to the Contractor and protecting the Contractor from all claims for personal injury, including death, and all claims for destruction of or damage to property, arising out of or in connection with any operations under this Contract, whether such operations be by the Contractor or by any Subcontractor hired by the Contractor or anyone directly or indirectly employed by the Contractor or hired by the Contractor.

The successful Contractor shall supply and maintain insurance which defends, indemnifies and holds harmless the City of St. Pete Beach, its officers, employees and agents from and against any and all liability, damage claims, demands, costs, judgments, fees, attorney's fees or loss arising directly out of acts or omissions hereunder by the Contractor or third party under the direction or control of the Contractor. Such general and excess liability coverage shall be primary to any other coverage carried by the City of St Pete Beach. Contractor must furnish the City with Certificate of Insurance prior to commencement of work. An approved Certificate of Insurance furnished by the Contractor's carrier to guarantee the Contractor being insured with the City of St Pete Beach must be named as a certificate holder for this contract. The following minimum coverage:

- Commercial General Liability Insurance $1,000,000.00.
- Comprehensive General Liability Insurance of $1,000,000.00 each occurrence.
- Personal Injury for $1,000,000.00 each occurrence.
- Automobile Liability $1,000,000.00.
- General Workers Compensation Insurance as required by Florida law.
- Longshore Harbor Workers Compensation Insurance

PROTECTION OF WORK AND PROPERTY

The Contractor shall continuously maintain adequate protection of all their work and materials from damage or theft and shall protect the City's property and all adjacent property from injury or loss arising in connection with activities under their Contract. The Contractor shall make good any such damage, injury, or loss, except such as may be caused by agents or employees of the City.

The Contractor shall take, use, provide, and maintain all necessary precautions, safeguards, and protection to prevent accidents, or injury to persons or property on, about, or adjacent to the site of the work. Should the situation arise that physical security is needed the Contractor will provide security on off days and holidays. The Contractor shall be responsible for all charges incurred with such action.

The Contractor shall post danger signs warning against any hazards created by the work being done under their Contract. They shall designate a responsible member of their organization on the work, whose duty shall be the prevention of accidents, and the name of the person so designated shall be reported to the City Manager or designee and City in writing. In an emergency affecting the safety of life, or of the work or adjoining property, the Contractor, without special instruction or authorization from the City Manager or designee, or City, is hereby permitted to act, at their own discretion, to prevent such threatened loss or injury, and they must take such action if so instructed or authorized by the City Manager or designee. The Contractor shall also protect adjacent property as required by law.

PARKING

The Contractor shall arrange with City Manager or designee for temporary parking areas to accommodate construction personnel and construction equipment. Note that limited parking spaces are available in the City of St. Pete Beach. The Contractor will be asked to coordinate with the City's representative on site on a regular basis to minimize the impact on residents and visitors.

TRANSPORTATION, HANDLING AND STORAGE

The Contractor shall transport, handle, protect and store products in accordance with manufacturer's instructions and all environmental regulatory agencies.

VEHICLES

Business vehicles shall be identified on both sides with the name of the company.

ENVIRONMENTAL PROTECTION

It shall be the Contractor's responsibility to implement construction methods, best management practices, and erosion control methods that avoid water pollution as required by the State of Florida Department of Environmental Protection (FDEP), City of St. Pete Beach, and Pinellas County. Any Contractors in violation of the City of St. Pete Beach Regulations, Pinellas County Regulations, Florida Department of Environmental Protection Regulations, or any other regulatory agency regulations shall be the sole responsibility of the Contractor. The Contractor shall hold harmless the City of St. Pete Beach and the City Manager or designee from any fines and litigation resulting from the Contractor's actions. The Contractor shall pay all attorneys' fees, fines, penalties and any other such expenses resulting from the Contractor's actions. The Contractor shall provide all necessary measures to prevent any materials whatsoever from entering the waterway except for those materials, which are shown, on the plans as completed structures. The Contractor shall provide MSDS sheets to the City Manager or designee on all applicable materials before applying those materials. The Contractor shall secure the necessary education, certifications,

licenses and permits required by state and local agencies to operate and manage a construction site, including but not limited to, FDEP requirements related to Coastal Construction Control Line. The Contractor shall abide by all rules and regulations set forth and required by the City of St. Pete Beach's MS4 NPDES Permit.

TIMELY DEMAND FOR STAKES AND INSTRUCTIONS

The Contractor shall provide reasonable and necessary materials, opportunities, and assistance for setting stakes and making measurements, including the furnishing of a rodman, or a chainman at intermittent times during the construction period. They shall not proceed until they have received such stakes and instructions as may be necessary as the work progresses. The work shall be done in strict conformity with such stakes and instructions. The Contractor shall carefully preserve benchmarks, reference points and stakes, and in case of willful or careless destruction, they will be charged with the resulting expense and shall be responsible for any mistakes that may be caused by their unnecessary loss or disturbance.

WORKMANSHIP

The Contractor acknowledges that they have satisfied themselves as to the nature and location of the work; the general and local conditions including but not restricted to those bearing upon transportation, disposal, handling and storage of materials; availability of labor, water, electric power, roads; and uncertainties of weather, surface conditions, subsurface conditions, tides or similar physical conditions at the site, the character of equipment and facilities required to prosecute the work. Any failure by the Contractor to acquaint themselves with any aspect of the work or with any of the applicable conditions shall not relieve the Contractor from the responsibility to successfully perform the work under the Contract Documents, nor shall it be considered the basis for any claim for additional time or compensation.

UTILITIES

The Contractor shall anticipate all underground obstructions such as water lines, gas lines, sewer lines, utility lines, or any other public or private facilities and debris. In all cases where existing utility lines may be interfered with by the work, the Contractor shall give a minimum of thirty-six (36) hours' notice to the owners of such utilities, to permit them to relocate the lines prior to construction. No extra payment shall be allowed for the removal, replacement, repair or possible increased cost caused by underground obstructions. The location of existing structures and utilities provided in the plans are approximate only. Any damage to existing structures to remain or work of any kind shall be repaired or restored promptly by, and at the expense of the Contractor.

The Contractor shall at all times protect all desirable trees, plants, curbs, sidewalks, irrigation components, and structures not requiring removal to accomplish the work, whether or not they are shown on the plans. The Contractor must contact the City to obtain tree removal permits for the removal of any tree not identified for removal in the Project Plans.

In matters of restoration, all materials, construction, and workmanship shall be acceptable to, and approved by the City of St. Pete Beach and the City Manager or designee. No changes in size, shape, configuration, location, materials, or construction shall be made without prior written authorization from the City Manager or designee. Any demolition debris and other debris shall be hauled offsite and properly disposed of by the Contractor and shall be inclusive to the prices as stated in the BID SCHEDULE, unless otherwise stipulated as part of the project to remain.

No interruption of ingress and egress to private property shall be made unless the Contractor has made prior arrangements acceptable to the owner of the affected property. The City Manager or designee shall

notify affected residents/property owners of impending activity or inconvenience via door hanger.

The Contractor shall provide all traffic control devices utilized during construction and meet the requirements set forth in the Florida State Department of Transportation "Manual on Traffic Control and Safe Practices for Street and Highway Construction, Maintenance, and Utility Operations."

CLEANING UP

Upon completion or termination of the work the Contractor shall, as directed by the City Manager or designee, remove from the vicinity of the work all equipment and temporary structures, waste materials and rubbish resulting from his operations, leaving the premises in a neat and presentable condition. All debris generated by the Contractor will be removed before leaving the area. All areas will be raked to remove smaller debris. All surrounding sidewalks, parking lots and roadways will be cleared of any dust or debris generated by the Contractor. In the event of their failure to do so, the City at the expense of the Contractor may do the same, and their Surety shall be responsible.

DEFECTIVE WORK OR MATERIAL

The Contractor shall promptly remove from the premises all work and materials condemned by the City Manager or designee as failing to conform to the Contract, whether incorporated or not, and the Contractor shall promptly replace and re-execute his own work in accordance with the Contract and without expense to the City and shall bear the expense of making good all work of other Contractors destroyed or damaged by such removal or replacement.

If the Contractor does not remove such condemned work or materials within a reasonable time after notice, the City may remove them and store the materials at the expense of the Contractor. If the Contractor does not pay the expense of such removal within ten (10) business days' time thereafter, the City may, upon thirty (30) business days written notice sell such materials at auction or at private sale and shall account for the net proceeds thereof after deducting all the costs and expenses that should have been borne by the Contractor.

DISPUTE RESOLUTION

The Contract shall be construed under Florida law. The parties agree that all controversies, claims and other matters in question between the parties arising out of or relating to this Contract or its breach shall be resolved through mediation. Upon notice of any party to the Contract of a dispute, question or controversy, the parties shall agree to the appointment of a qualified mediator. A qualified mediator is a person who has received at least forty (40) hours of mediation training and has actual experience as a mediator in resolving contract disputes. If the dispute, question or controversy is not resolved through mediation within sixty (60) business days of a notice of the dispute between the parties, the City reserves the right to seek resolution through court action.

INDEMNIFICATION

In consideration of the payment of ten dollars ($10.00) as part of the above purchase price, Contractor shall indemnify, defend, and hold harmless the City, its officers and employees, from liabilities, damages, losses and costs, including but not limited to, reasonable attorney's fees, to the extent caused by the negligence, recklessness, or intentional wrongful misconduct of the responding firm and any persons employed or utilized by the responding firm in the performance of the Contract.

GENERAL WARRANTY

Neither the final certificate nor any provision in the Contract Documents nor partial or entire occupancy of the premises by the City shall constitute an acceptance of work not done in accordance with the Contract Documents or relieve the Contractor of liability in respect to any express warranties or responsibility for faulty materials or workmanship. The Contractor shall remedy any defects in the work and pay for any damage to other work resulting therefrom that shall appear within a period of eighteen (18) months from the date of final acceptance of the work, unless a longer period is specified. The City shall give notice of observed defects with reasonable promptness.

LAND OF CITY, USE OF, BY CONTRACTOR

The City shall provide the land upon which the work under this Contract is to be done, and will, so far as is convenient, permit the Contractor to use as much of the land as is required for the erection of temporary construction facilities and storage of materials, together with the right of access to same, but beyond this, the Contractor shall provide, at his/her cost and expense, any additional land required. It will be the responsibility of the Contractor to repair or restore to the satisfaction of the City, at their own expense, any damage to land used for the above stated activities or any other activities approved by the City.

OTHER WORK

Wherever work being done by the City or by other Contractors is contiguous to work covered by this Contract, the respective rights of the various interests involved shall be established by the City Manager or designee to secure the completion of the various portions of the work in general harmony.

OTHER CONTRACTS

The City may award other Contracts. The Contractor shall fully cooperate with such other Contractors and carefully fit his/her own work to that provided under other Contracts, as may be with the performance of work by any other Contractor or City.

COOPERATIVE PURCHASING

Pursuant to their own governing laws and subject to the agreement of the Contractor, governmental entities may make purchases under the terms and conditions contained in the executed Contract, if agreed to by Contractor. Such purchases are independent of the Contract between the City and the Contractor, and the City is not a party to these transactions. Agencies seeking to make purchases under this Contract are required to follow the requirements of Rule 60A-1.045(5), F.A.C.

DELAYS AND EXTENSION OF TIME

If the Contractor should be delayed at any time in the progress of the work by an act or neglect of the City or the City Manager or designee, or of any employee of either, or by any separate Contractor employed by the City, or by changes ordered in the work, or by strike, lockouts, fire, unusual delay in transportation, unavoidable casualties, or any cases beyond the Contractor's control, or by delay authorized by the City Manager or designee, or by any cause which the City Manager or designee shall decide to justify the delay, then the time of completion shall be extended for such reasonable time as the City Manager or designee may decide. No such extension shall be made for a delay that occurs more than five (5) business days before a claim is made in writing to the City Manager or designee. In the case of a continued cause of delay, only

one (1) claim is necessary. This section does not exclude the recovery of damages for delay by either party under other provisions in the Contract Documents.

CITY'S RIGHT TO TAKE OVER THE WORK

If the Contractor shall be adjudged bankrupt, or if they should make a general assignment for the benefit of its creditors, or if a receiver should be appointed to take over their affairs, or if they should fail to prosecute their work with due diligence and carry the work forward in accordance with its' work schedule and the time limits set forth in the Contract Documents, or if they should fail to substantially perform one or more of the provisions of the Contact Documents to be performed by them, the City may serve written notice on the Contractor and the Surety on its' performance bond, stating the City's intention to exercise one of the remedies hereinafter set forth and the grounds upon which the City bases its right to exercise such remedy. In any event, unless the matter complained of is satisfactorily cleared within ten (10) business days after the service of such notice, the City may, without prejudice to any other right or remedy exercise one of such remedies at once; having first obtained a certificate from the City Manager or designee that such sufficient cause exists to justify such action.

The City may terminate the services of the Contractor, which termination shall take effect immediately upon service of notice thereof on the Contractor and their Surety, whereupon the Surety shall have the right to take over and perform the Contract. If the Surety does not commence performance of the Contract within ten (10) ten days after service of the notice of termination, the City may itself take over the work, take possession of and use all materials, tools, equipment, and appliances on the premises and prosecute the work to completion by such means as it shall deem best. In the event of such termination of their service, the Contractor shall not be entitled to any further payment under their Contract until the work is completed and accepted. If the City takes over the work and the unpaid Contract balance exceeds the cost of completing the work, including compensation for damages or expenses incurred by the City through the default of the Contractor, the excess unpaid Contract balance shall be paid to the Contractor. If the City takes over the work and the unpaid Contract balance does not exceed the cost of completing the work, including compensation for damages or expenses incurred by the City through the default of the Contractor, the Contractor and his Surety shall pay the difference to the City. The City Manager or designee shall certify such cost, expenses, and damages.

The City may take control of the work and either make good the deficiencies of the Contractor itself or direct the activities of the Contractor in doing so, employing such additional help as the City deems advisable. In such event, the City shall be entitled to collect from the Contractor and his Surety, or to deduct from any payment then or thereafter due the Contractor, the costs incurred by it through the default of the Contractor, provided the City Manager or designee approves the amount thus charged to the Contractor.

The City may require the Surety on the Contractor's bond to take control of the work at once and see to it that all deficiencies of the Contractor are made good with due diligence. As between the City and the Surety, the entire cost of making good such deficiencies shall be borne by the Surety. If the Surety takes over the work, either upon termination of the services of the Contractor or upon instructions from the City to do so, the provisions of the Contract Documents shall govern in respect to the work done by the Surety, the Surety being substituted for the Contractor as to such provisions, including provisions as to the payment for the work and provisions of this section as to the right of the City to do the work itself or to take control of the work.

RIGHT OF OCCUPANCY

The City shall have the right, if necessary, to take possession of and to use any completed or partially completed portions of the work, if such use be approved by the City Manager or designee even if the time for completing the entire work or such portions of the work has not expired and even if the work has not been finally accepted. Such possession and use shall not constitute an acceptance of such possession and use if it materially interferes with the Contractor's operations. The City shall also have the right to enter the premises with the Contractor for the purpose of doing work not covered by its Contract.

ACCEPTANCE

Final inspection and acceptance of the work shall be made for the City by the City Manager or designee. Such inspection shall be made as soon as practical after the Contractor has notified the City in writing that the work is ready for such inspection.

WAIVER

It is expressly understood and agreed that any waiver granted by the City Manager or designee of any term, provision, or covenants of the Contract shall not constitute a precedent or breach of the same or any other terms, provisions, or covenants of the Contract. Neither the acceptance of the work by the City nor the payment of all or any part of the sum due the Contractor hereunder shall constitute a waiver by the City of any claim which the City may have against the Contractor or Surety under this Contract or otherwise.

INSPECTION

The City Manager or designee and his representative shall, at all times, have access to the work during its construction and shall be furnished with every reasonable facility for ascertaining that the stock and materials used and employed, and the workmanship, are in accordance with the requirements and intentions of the Plans. All work done and all materials furnished shall be subject to their inspection and approval by the City Manager or his designee. If any work should be covered up without approval or consent of City Manager or designee, it must, if required by the City Manager or designee, be uncovered for examination at the Contractor's expense.

The City Manager or designee may order re-examination of questioned work and if so ordered, the Contractor must uncover the work. If such work were found in accordance with the Contract Documents, the City shall pay the cost of re-examination and replacement. If such work be found not in accordance with the Contract Documents, the Contractor shall pay such costs unless they show that the defect in the work was caused by another Contractor, and in that event, the City shall pay such cost.

The inspection of the work shall not relieve the Contractor of any of their obligations to fulfill their Contract as prescribed, and defective work shall be made good and unsuitable materials shall be rejected, notwithstanding that such defective work and materials have been previously overlooked and accepted on estimates for payment. All work shall be tested to the satisfaction of the City Manager or designee before acceptance.

BID REVIEW AND CONTRACT AWARD

Failure to submit all documents requested at the time of bid may deem the Contractor's bid ineligible for award. The City of St. Pete Beach reserves the right to reject any or all bids or parts of bids or accept any bid or part thereof deemed to be in the best interests to the City of St. Pete Beach. The City shall be the sole final judge of qualifications of the bidder to perform service and reserves the exclusive right to accept or reject any bids as it deems to be in the best interests of the City. The City may waive any informality.

LOCAL, STATE AND FEDERAL COMPLAINCE REQUIREMENTS

The laws of the State of Florida do apply to any purchase made under this Request for Bid. Proposers shall comply with all local, state, and federal directives, orders and laws as applicable to their bid and subsequent contracts include but not limited to Equal Employment Opportunity, Minority Business Enterprise, and OSHA as applicable to this contract.

Compliance with Fla. Stat. 448.095:

- Contractor agrees to comply with all applicable portions of Fla. Stat. 448.095. Contractor must use the U.S. Department of Homeland Security's E-Verify System, hhtps://e-verify.uscis.gov/emp, to verify the employment eligibility of all employees hired on or after January 1, 2021 during the term of this Agreement.

- Subcontractors (i) Contractor shall also require all subcontractors performing work under this Agreement to use the E-Verify system for any employees they may hire during the term of this Agreement. (ii) Subcontractors shall provide Contractor with an affidavit stating the subcontractor does not employ, contract with, or subcontract with an unauthorized alien, as defined by Fla. Stat. 448.095 (iii) Contractor shall provide a copy of such affidavit to the City upon receipt and shall maintain a copy for the duration of the Agreement.

- Contractor must provide evidence of compliance with Fla. Stat. 448.05 by January 1, 2021. Evidence may consist of, but is not limited to, providing notice of Contractor's E-Verify number.

- Failure to comply with this provision is a material breach of the Agreement, and the City may choose to terminate the Agreement at its sole discretion. Contractor may be liable for all costs associated with the City securing the same services, inclusive, but not limited to, higher costs for the same services and rebidding costs (if necessary). Any challenge to termination under this provision must be filed in the Circuit Court no later than 20 calendar days after the date of termination. If this agreement is terminated for a violation of the statue by the Contractor, the Contractor may not be awarded a public agreement for a period of 1 year after date of termination.

RESERVES THE RIGHT

The City reserves the right to accept or reject any and/or all bids, to waive irregularities and technicalities, and to request re-submission. If only one bid is received by the bid date and time listed, the bid may or may not be rejected by the City depending upon bid review and the needs of the City.

The City reserves the right to select a firm with or without additional interviews and may decide to select any of the firms submitting bids. The City reserves the right to award the contract to a responsible proposer submitting a responsible bid, with a resulting negotiated agreement which is most advantageous and in the best interest of the City.

Proposers, bidders, their agents, and associates shall not contact or solicit any City Commission member, City employee, or official regarding this RFB during any phase of the bidding process. Failure to comply with the provision may result in disqualification of the bidder, at the option of the City. Only that individual listed, or an approved designee, as the contact person for this RFB shall be contacted.

SUBMITTAL WITHDRAWAL

After submittals are opened, corrections or modifications to submittals are not permitted, but a responding firm may be permitted to withdraw an erroneous submittal prior to the award by the City Commission, if the following is established:

- That the responding firm acted in good faith in submitting the submittal;
- That in preparing the submittal there was an error of such magnitude that enforcement of the submittal would work severe hardship upon the respondent;
- That the error was not the result of gross negligence or willful inattention on the part of the respondent;
- That the error was discovered and communicated to the City within twenty-four (24) hours of submittal opening, along with a request for permission to withdraw the submittal; or
- The responding firm submits documentation and an explanation of how the error was made.

CONE OF SILENCE

Respondents to this solicitation or persons acting on their behalf may not contact, between the release of the solicitation and the end of the 72-hour period following the agency posting the notice of intended award, excluding Saturdays, Sundays, and state holidays, any employee or officer of the executive or legislative branch concerning any aspect of this solicitation, except in writing to the procurement officer or as provided in the solicitation documents. Violation of this provision may be grounds for rejecting a response.

TERMINATION

The resulting contract may be canceled by the City when:

- Sufficient funds are not available to continue its full and faithful performance of this contract.
- There is sub-standard or non-performance of contract.
- The City wishes to terminate at any time and for any reason, upon giving thirty (30) days prior written notice to the other party.

The resulting contract may be canceled by either party in the event of substantial failure to perform in accordance with the terms by the other party through no fault of the terminating party.

FISCAL NON-FUNDING

If funds for the requested services described herein are not appropriated via the annual budget adoption process, the City reserves the right to cancel this Agreement immediately upon written notice to the vendor.

PROJECT RECORDS

The awarded firm shall maintain auditable records concerning the procurement to account for all receipts and expenditures, and to document compliance with the Contract. These records shall be kept in accordance with generally accepted accounting methods, and the City of St. Pete Beach reserves the right to determine the record-keeping method in the event of non-conformity. These records shall be maintained for three (3) years after final payment has been made and shall be readily available to City personnel with reasonable notice, and to other persons in accordance with the Florida Public Disclosure Statutes. Additionally, the awarded firm shall abide by and comply with Florida Statutes regarding public records. Specifically, the firm shall be aware of the provisions found in Section 119.0701, Florida Statutes.

Upon completion of the project, all reports, studies, recommendations, forms, and other project specific information will need to be submitted in paper and in an electronic file format (.PDF, .JPEG) on CD or USB storage device.

IV. REFERENCES & MINIMUM QUALIFICATIONS

Provide at least three (3) or more professional business references with which you have contracted to provide similar services in the past five (5) years. Include the name of the person, its organization and telephone number, fax number, and e-mail address. Include any governmental agencies, with the same contact and descriptive information for which you have provided similar service within the past five (5) years.

Provide a brief description of the history and capabilities of the firm. Describe the types of projects or services the firm performs/has performed and the dollar value of each. Provide information regarding your firm's ability to complete this project. Demonstrate that the firm's personnel have experience with similar projects.

Identify all unresolved and ongoing claims and disputes against your firm in excess of $500,000. Include any claims against the principals of your firm or any claims your company may have against a third party. Provide a history of litigation, including the outcomes, for the past five (5) years.

The responding firm shall provide a statement of assurance that the firm is not presently in violations of any statutes or regulatory rules that might have an impact on the firm's operations. All applicable laws and regulations of the State of Florida and ordinances and regulations of the City of St. Pete Beach will apply.

Provide the overall bonding capacity for the company and provide a history of any claims against the bidder's previous bonds for the past five (5) years.

The City shall be the sole final judge of qualifications of bidder to perform service and reserves the exclusive right to accept or reject any bid as it deems to be in the best interests of the City. The City reserves the right to make such investigation, as it deems necessary, to determine the ability of any proposer to perform the work or service requested. Failure to comply with the requirements of this section may be grounds for rejecting a response.

V. PUBLIC ENTITY CRIMINAL AFFIDAVIT

SWORN STATEMENT – PUBLIC ENTITY CRIMES

PURSUANT TO § 287.133 (3)(a), FLORIDA STATUTES, ON PUBLIC ENTITY CRIMES
THE FORM MUST BE SIGNED AND SWORN TO IN THE PRESENCE OF A NOTARY PUBLIC OR OTHER OFFICIAL AUTHORIZED TO ADMINISTER OATHS.

1. This sworn statement is submitted to: City of St. Pete Beach

by: _____
(Print individual's name and title)

for: _____
(Print name of entity submitting sworn statement)

at: _____
(Business address)

and (if applicable), its Federal Employer Identification Number (FEIN):

_____
(FEIN)

or, if the entity has no FEIN, include the Social Security Number:

_____
(SSN)

by the individual signing this sworn statement:

_____
(Signature)

2. I understand that a "public entity crime" as defined in § 287.133 (1)(g), Fla. Stat., means a violation of any State or Federal law by a person with respect to and directly related to the transaction of business with any public entity or with an agency or political subdivision of any other state or of the United States including, but not limited to, any bid or contract for goods or services, any lease for real property, or any contract for the construction or repair of a public building or public work, involving antitrust, fraud, theft, bribery, collusion, racketeering, conspiracy, or material misrepresentation.

3. I understand that "convicted" or "conviction" as defined in § 287.133 (1)(b), Fla. Stat., means a finding of guilt or a conviction of public entity crime with or without an adjudication of guilt in any Federal or State trial court of record relating to charges brought by indictment or information after July 1, 1989, as a result of a jury verdict, non-jury trial, or entry of a plea of guilty or nolo contendere.

4. I understand that an "affiliate" as defined in § 287.133 (1)(a), Fla. Stat., means:
   a. A predecessor or successor of a person convicted of a public entity crime or
   b. An entity under the control of any natural person who is active in the management of the entity and who has been convicted of a public entity crime. The term "affiliate" includes those officers, directors, executives, partners, shareholders, employees, members, and agents who are active in the management of an affiliate. The ownership by one (1) person of shares constituting a controlling interest in another person or a pooling of equipment or income among persons when not for fair market value under the arm's length agreement, shall be a prima facie case that one (1) person controls another person. A person who

knowingly enters into a joint venture with a person who has been convicted of a public crime in Florida during the preceding thirty-six (36) months shall be considered an affiliate.

5. I understand that a "person" as defined in Section 287.133 (1)(e), Fla. Stat., means any natural person or any entity organized under the laws of any state or of the United States with the legal power to enter into a binding contract and which bids or applies to bid on contracts let by a public entity, or which otherwise transacts or applies to transact business with a public entity. The term "person" includes those officers, directors, executives, partners, shareholders, employees, members, and agents who are active in management of an entity.

6. Based on information and belief, the **statement which I have marked below is true** in relation to the entity submitting this sworn statement (indicate which statement applies).

☐ Neither the entity submitting this sworn statement, nor any of its officers, directors, executives, partners, shareholders, employees, members, or agents who are active in the management of the entity nor any affiliate of the entity has been charged with and convicted of a public entity crime subsequent to July 1, 1989.

☐ The entity submitting this sworn statement or one (1) or more of its officers, directors, executives, partners, shareholders, employees, members, or agents who are active in the management of the entity or an affiliate of the entity has been charged with and convicted of a public entity crime subsequent to July 1, 1989.

☐ The entity submitting this sworn statement or one (1) or more of its officers, directors, executives, partners, shareholders, employees, members, or agents who are active in the management of the entity or an affiliate of the entity has been charged with and convicted of a public entity crime subsequent to July 1, 1989. However, there has been a subsequent proceeding before a Hearing Office of the State of Florida, Division of Administrative Hearings and the Final Order entered by the Hearing Officer determined that it was not in the public interest to place the entity submitting this sworn statement on the convicted vendor list (attach a copy of the final order).

I UNDERSTAND THAT THE SUBMISSION OF THIS FORM TO THE CONTRACTING OFFICE FOR THE PUBLIC ENTITY IDENTIFIED IN PARAGRAPH 1 ABOVE IS FOR THE PUBLIC ENTITY ONLY AND THAT THIS FORM IS VALID THROUGH DECEMBER 31 OF THE CALENDAR YEAR IN WHICH IT IS FILED. I ALSO UNDERSTAND THAT I AM REQUIRED TO INFORM THE PUBLIC ENTITY PRIOR TO ENTERING INTO A CONTRACT IN EXCESS OF THE THRESHOLD AMOUNT PROVIDED IN SECTION 287.017, FLORIDA STATUTES, FOR CATEGORY TWO OF ANY CHANGE IN THE INFORMATION CONTAINED IN THIS FORM.

STATE OF FLORIDA
COUNTY OF _____

The foregoing instrument was sworn to (or affirmed), subscribed, and acknowledged before me **by means of ☐ physical presence or ☐ online notarization**, this ____ day of _____, 2026, by _____, who is personally known to me or has produced _____ as identification.

(SEAL)

_____
Notary Public – State of Florida

_____
(Print, Type, Stamp, or Commissioned Name of Notary Public)

VI. NON-COLLUSION AFFADAVIT

STATE OF _____

COUNTY OF _____

I state that I_____of_____,

(Name and Title) (Name of Firm)

am authorized to make this affidavit on behalf of my firm and its owner, directors and officers. I am the person responsible in my firm for the price(s) and amount(s) of this Response, and the preparation of the Response. I state that:

1. The price(s) and amount(s) of this Response have been arrived at independently and without consultation, communication or agreement with any other Provider, potential provider, Proposal, or potential Proposal.
2. Neither the price(s) nor the amount(s) of this Response, and neither the approximate price(s) nor approximate amount(s) of this Response, have been disclosed to any other firm or person who is a Provider, potential Provider, Proposal, or potential Proposal, and they will not be disclosed before Proposal opening.
3. No attempt has been made or will be made to induce any firm or persons to refrain from submitting a Response for this contract, or to submit a price(s) higher that the prices in this Response, or to submit any intentionally high or noncompetitive price(s) or other form of complementary Response.
4. The Response of my firm is made in good faith and not pursuant to any agreement or discussion with, or inducement from, any firm or person to submit a complementary or other noncompetitive Response.
5. _____, its affiliates, subsidiaries, officers, director, and employees (Name of Firm) are not currently under investigation, by any governmental agency and have not in the last three years been convicted or found liable for any act prohibited by State or Federal law in any jurisdiction, involving conspiracy or collusion with respect to Proposal, on any public contract, except as follows:

I state that I and the named firm understand and acknowledge that the above representations are material and important, and will be relied on by the State of Florida for which this Response is submitted. I understand and my firm understands that any misstatement in this affidavit is, and shall be treated as, fraudulent concealment from the State of Florida of the true facts relating to the submission of responses for this contract.

Name of Organization: _____

Signed By: _____

Print Name: _____

The foregoing instrument was sworn to (or affirmed), subscribed, and acknowledged before me **by means of ☐ physical presence or ☐ online notarization**, this ____ day of _____, 2026, by _____, who is personally known to me or has produced _____ as identification.

(SEAL)

_____
Notary Public – State of Florida

_____
(Print, Type, Stamp, or Commissioned
Name of Notary Public)

VII. SPECIFICATIONS

TABLE OF CONTENTS

SECTION 1 – GENERAL

1.01 LOCATION OF THE WORK SITE AND ACCESS

1.02 SCOPE OF WORK

1.03 PROJECT SUMMARY

1.04 CONTRACT DRAWINGS AND SPECIFICATIONS

1.05 FIELD ENGINEERING

1.06 SAFEGUARDING SURVEY MARKS

1.07 INSPECTION AUTHORITY

1.08 PROJECT SCHEDULE

1.09 MATERIALS AND EQUIPMENT

1.10 MANUFACTURER

1.11 SAMPLES

1.12 EQUIVALENT QUALITY

1.13 MATERIAL AND EQUIPMENT DELIVERY AND STORAGE

1.14 SERVICE OF MANUFACTURER'S REPRESENTATIVE

1.15 CONTAMINANTS CONTAINMENT/DISPOSITION

1.16 PREVENTION, CONTROL, AND ABATEMENT OF EROSION AND WATER POLLUTION

1.17 MAINTENANCE OF STORM DRAINAGE SYSTEM

1.18 SPILL OR DISCHARGE OF WASTEWATER OR RECLAIMED WATER

1.19 SEQUENCE OF OPERATION

1.20 WORK IN STREETS AND HIGHWAYS

1.21 WORK IN PRIVATE PROPERTY

1.22 PERMITS

1.23 FIELD OFFICE AND APPURTENANT STRUCTURES

1.24 CONTRACTOR'S SIGN

1.25 MOBILIZATION

1.26 WATER PURCHASE

1.27 TRAFFIC CONTROL

1.28 TREE PROTECTION

1.29 TREE REMOVAL AND REPLACEMENT

1.30 UTILITIES

1.31 NEIGHBORHOOD NOTIFICATION

1.32 SHOP, FIELD, AND LABORATORY TESTING

1.33 SALVAGED MATERIALS

1.34 PRECONSTRUCTION VIDEO

1.35 SITE MANAGEMENT

SECTION 2 – PAY ITEM DESCRIPTIONS

2.01 SCOPE

2.02 ESTIMATED QUANTITIES

2.03 WORK OUTSIDE AUTHORIZED LIMITS

2.04 MEASUREMENT STANDARDS

2.05 AREA MEASUREMENTS

2.06 LUMP SUM ITEMS

2.07 PAY ITEM DESCRIPTIONS

SECTION 3 – SUBMITTALS

3.01 GENERAL

3.02 CONTRACTOR RESPONSIBILITIES

3.03 SUBMITTAL NUMBERING

3.04 SUBMITTAL REVIEW

SECTION 4 – AS BUILTS

4.01 MINIMUM AS-BUILT DRAWING STANDARDS FOR ALL AS-BUILT DRAWINGS

4.02 AS-BUILT DRAWINGS PREPARATION

4.03 AS-BUILT DRAWINGS SUBMITTAL

SECTION 5 – CONCRETE, MASONRY, AND REINFORCING STEEL

5.01 GENERAL

5.02 PORTLAND CEMENT CONCRETE

5.03 REINFORCING STEEL

5.04 FIBROUS CONCRETE REINFORCEMENT

5.05 PLACEMENT OF REINFORCEMENT

5.06 PLACEMENT OF CONCRETE

5.07 CURING OF CONCRETE

5.08 FINISHING OF CONCRETE

5.09 CONCRETE BRICK

5.10 CLAY BRICK

5.11 MASONRY BLOCK

5.12 MORTAR

5.13 GROUT

SECTION 5A – ALUMINUM GRATING AND STAIRS

5A.01 GENERAL

5A.02 PRODUCTS

5A.03 EXECUTION

SECTION 5B – PIPE AND TUBE RAILINGS

5B.01 GENERAL

5B.02 PRODUCTS

5B.03 EXECUTION

SECTION 6 – EXCAVATION AND BACKFILL

6.01 GENERAL

6.02 TRENCH SAFETY

6.03 WORK IN WETLANDS, MANGROVES, AND PRESERVATION AREAS

6.04 CLEARING AND GRUBBING

6.05 ROADWAY EXCAVATION

6.06 TRENCH EXCAVATION

6.07 STRUCTURE EXCAVATION

6.08 EXCAVATION OF UNSUITABLE MATERIAL

6.09 SHEETING, SHIELDING, AND SLOPING

6.10 DEWATERING

6.11 BORROW MATERIAL

6.12 BEDDING MATERIAL

6.13 STRUCTURAL SLAB BEDDING

6.14 BACKFILL MATERIAL

6.15 BACKFILL COMPACTION

6.16 BACKFILLING OF TRENCH

6.17 BACKFILLING STRUCTURES

6.18 BACKFILLING UNDER ROADWAYS

6.19 DISPOSING OF LEFTOVER MATERIAL

6.20 ADJACENT FACILITIES

6.21 TEMPORARY SUPPORTS

6.22 FLOWABLE FILL

SECTION 7 – SURFACE RESTORATION

7.01 GENERAL

7.02 ROADWAY RESTORATION

7.03 TEMPORARY PAVEMENT

7.04 SHELL BASE

7.05 LIMEROCK BASE

7.06 CRUSHED (RECLAIMED) CONCRETE BASE

7.07 ASPHALTIC CONCRETE PAVEMENT

7.08 BRICK PAVEMENT

7.09 CURB AND GUTTER

7.10 CONCRETE SIDEWALK

7.11 HEXAGON BLOCK SIDEWALK

7.12 DRIVEWAY AND PARKING LOT

7.13 DRIVEWAY - ASPHALT

7.14 DRIVEWAY - CONCRETE

7.15 DRIVEWAY - PEAGRAVEL

7.16 DRIVEWAY - SHELL

7.17 GRASS

7.18 EXPANSION JOINT MATERIAL

SECTION 8 – PAINTING

8.01 GENERAL

8.02 PAINTING SCHEDULES AND SYSTEMS

8.03 EXECUTION

SECTION 9 – PIPING MATERIALS: DUCTILE IRON PIPE AND FITTINGS

9.01 GENERAL

9.02 PIPE

9.03 FITTINGS

9.04 JOINTS – BURIED PIPE AND FITTINGS

9.05 JOINTS – EXPOSED PIPE AND FITTINGS

9.06 DETECTION

9.07 ZINC/EPOXY/FLUOROPOLYMER PROTECTIVE COATING

SECTION 10 – PIPING MATERIALS: PVC PRESSURE PIPE

10.01 GENERAL

10.02 PIPE

10.03 FITTINGS

10.04 JOINTS

10.05 DETECTION

10.06 MARKINGS AND COLOR CODING

10.07 HARNESSING

10.08 INSPECTION AND TESTING

SECTION 11 – PIPING MATERIALS: HDPE PRESSURE PIPE – NOT APPLICABLE TO THIS PROJECT

SECTION 12 – PRESSURE PIPE CONSTRUCTION

12.01 GENERAL

12.02 DATA TO BE SUBMITTED

12.03 MATERIALS

12.04 CONNECTIONS TO EXISTING MAINS

12.05 CONSTRUCTION OPERATIONS

12.06 LAYING AND JOINTING PRESSURE PIPELINES

12.07 PIPELINE CLEANING

12.08 TESTING AND DISINFECTION OF PRESSURE PIPELINES

12.09 SURFACE RESTORATION AND MISCELLANEOUS

SECTION 13 – DIRECTIONAL BORING OF PIPE – NOT APPLICABLE TO THIS PROJECT

SECTION 14 – JACKING AND BORING – NOT APPLICABLE TO THIS PROJECT

SECTION 15 – FLUSHING, TESTING AND DISINFECTION

15.01 WORK INCLUDED

15.02 REFERENCES

15.03 SUBMITTALS

15.04 QUALITY ASSURANCE

15.05 REGULATORY REQUIREMENTS

15.06 DISINFECTION CHEMICALS

15.07 FLUSHING AND PRESSURE TESTING – PIPING

15.08 DISINFECTION FOR WATER MAIN INSTALLATION

15.09 BACTERIOLOGICAL SAMPLING FOR WATER MAIN INSTALLATION

15.10 QUALITY CONTROL

15.11 CONNECTIONS TO EXISTING MAINS

SECTION 16 – SANITARY SEWER BYPASS PUMPING

16.01 SCOPE OF WORK

16.02 PUBLIC IMPACTS

16.03 SUBMITTALS

16.04 EQUIPMENT

16.05 SITE CONDITIONS

16.06 ON-SITE MONITORING

16.07 OPERATIONS

16.08 DAMAGE RESTORATION & REMEDIATION

SECTION 17 – VALVES AND APPURTENANCES

17.01 GENERAL

17.02 TOOLS

17.03 GATE VALVES

17.04 PRESSURE SUSTAINING AND CHECK VALVE

17.05 BALL VALVES FOR PVC PIPE

17.06 BUTTERFLY VALVES

17.07 PLUG VALVES

17.08 VALVE ACTUATORS

17.09 AIR RELEASE VALVES

17.10 VALVE BOXES

17.11 CORPORATION COCKS

17.12 FLANGE ADAPTER COUPLINGS

17.13 FLEXIBLE COUPLINGS

17.14 HOSE BIBS

17.15 CHECK VALVES

17.16 HYDRANTS

17.17 TAPPING SLEEVES AND GATE VALVES

17.18 INSTALLATION

17.19 SHOP PAINTING

17.20 FIELD PAINTING

17.21 INSPECTION AND TESTING

SECTION 18 – NOT APPLICABLE TO THIS PROJECT

SECTION 19 – CEMENTITIOUS REHABILITATION – NOT APPLICABLE TO THIS PROJECT

SECTION 20 – NOT APPLICABLE TO THIS PROJECT

SECTION 21 – CURED-IN-PLACE PIPE LINER (CIPP) – NOT APPLICABLE TO THIS PROJECT

SECTION 22 – PRECAST POLYMER CONCRETE STRUCTURES

22.01 GENERAL

22.02 PRODUCTS

22.03 EXECUTION

22.04 MANHOLE AND/OR WETWELL CONSTRUCTION

SECTION 23 – FIBERGLASS WET WELL OR MANHOLE LINER – NOT APPLICABLE TO THIS PROJECT

SECTION 24 – NOT APPLICABLE TO THIS PROJECT

SECTION 25 – PUMP STATION CONTROLS

25.01 SCOPE OF WORK

25.02 SERVICE AND METERING

25.03 CODES

25.04 GENERAL

25.05 MISCELLANEOUS EQUIPMENT

25.06 PUMP CONTROL SYSTEM

25.07 RADAR LEVEL TRANSDUCER

25.08 FLOAT SWITCHES

25.09 CONDUIT INSTALLATION

25.10 CONDUCTORS

25.11 GROUNDING

25.12 SUPPORTS

25.13 TESTS AND CHECKS

25.14 SPARE PARTS

25.15 WARRANTY

SECTION 26 – ELECTRICAL

26.01 SCOPE OF WORK

26.02 SERVICE AND METERING

26.03 CODES, INSPECTION AND FEES

26.04 TESTS

26.05 CUTTING AND PATCHING

26.06 INTERPRETATION OF DRAWINGS

26.07 RECORD DRAWINGS

26.08 COMPONENT INTERCONNECTIONS

26.09 SHOP DRAWINGS

26.10 ELECTRICAL IDENTIFICATION

26.11 RACEWAYS AND FITTINGS

26.12 WIRES AND CABLES

26.13 MAIN DISCONNECT

26.14 SUPPORTING DEVICES

26.15 GROUNDING

26.16 VARIABLE FREQUENCY DRIVES

26.17 WARRANTY

26.18 TESTS AND INSPECTIONS

SECTION 27 – NOT APPLICABLE TO THIS PROJECT

SECTION 28 – ODOR CONTROL SYSTEM – NOT APPLICABLE TO THIS PROJECT

SECTION 29 – PRECAST CONCRETE BUILDING – NOT APPLICABLE TO THIS PROJECT

SECTION 30 – DIESEL ENGINE DRIVEN GENERATOR WITH WEATHERPROOF ENCLOSURE

30.1.01 – Scope of Work

30.1.02 – Description of System

30.1.03 – Qualifications

30.1.04 – Submittals

30.1.05 – Testing

30.1.06 – Special Tools and Spare Parts

30.2.01 – Ratings

30.2.02 – Engines

30.2.03 – Cooling Systems

30.2.04 – Generator, Exciter and Accessories

30.2.05 – Sound Attenuated, Weather-Protective Enclosure

30.2.06 – Exhaust Systems

30.2.07 – Automatic Starting System

30.2.08 – Main Line Circuit Breaker

30.2.09 – Generator Control Panels

30.2.10 – Generator Fuel System

30.3.01 – Generator Set Field Quality Control

30.3.02 – Generator Set Training and Demonstration

30.3.03 – Generator Testing

30.3.04 – Generator Set Spare Parts

30.3.05 – Warranty

SECTION 31 – MISCELLANEOUS EQUIPMENT – NOT APPLICABLE TO THIS PROJECT

SECTION 32 – STATE REVOLVING FUND (SRF) REQUIREMENTS – NOT APPLICABLE TO THIS PROJECT

SECTION 33 – FRAC-OUT PLAN FOR SUBAQUEOUS CROSSINGS – NOT APPLICABLE TO THIS PROJECT

SECTION 34 – NASSCO MANHOLE INSPECTION – NOT APPLICABLE TO THIS PROJECT

SECTION 35 – CHEMICAL SEALING OF HOST PIPE AND SERVICE CONNECTIONS – NOT APPLICABLE TO THIS PROJECT

SECTION 36 – REMOVAL OF PROTRUDING SERVICE CONNECTIONS – NOT APPLICABLE TO THIS PROJECT

SECTION 37 – WASTEWATER STRUCTURE REHABILITATION – NOT APPLICABLE TO THIS PROJECT

SECTION 38 – SIMULATED STONE FENCE – NOT APPLICABLE TO THIS PROJECT

SECTION 16050 – ELECTRICAL – GENERAL PROVISONS

16050.1.01 SCOPE OF WORK

16050.1.02 CODES, INSPECTIONS AND FEES

16050.1.03 TESTS

16050.1.04 CUTTING AND PATCHING

16050.1.05 INTERPRETATION OF DRAWINGS

16050.1.06 RECORD DRAWINGS

16050.1.07 COMPONENT INTERCONNECTIONS

16050.1.08 WARRANTY

SECTION 16075 – ELECTRICAL IDENTIFICATIONS

16075.1.01 SUMMARY

16075.1.02 CLOSEOUT SUBMITTALS

16075.1.03 DELIVERY, STORAGE AND HANDLING

16075.1.04 ENVIRONMENTAL REQUIREMENTS

16075.1.05 LABELS

16075.1.06 WIREMAKERS

16075.1.07 LOCKOUT DEVICES

16075.2.01 NAMEPLATES

16075.3.01 PREPARATION

16075.3.02 INSTALLATION

SECTION 16120 – CONDUIT AND CONDUCTORS

16120.1.01 SCOPE OF WORK
16120.1.02 CODES
16120.2.01 GENERAL
16120.2.02 RACEWAYS AND FITTINGS
16120.2.03 CONDUCTORS
16120.2.04 MISCELLANEOUS EQUIPMENT
16120.3.01 CONDUIT INSTALLATION
16120.3.02 CONDUCTORS
16120.3.03 GROUNDING
16120.3.04 SUPPORTS
16120.3.05 TESTS AND CHECKS

SECTION 16140 – WIRING DEVICES

16140.1.01 SUMMARY
16140.1.02 REFERENCES
16140.1.03 SUBMITTALS
16140.1.04 DELIVERY STORAGE AND HANDLING
16140.2.01 MANUFACTURERS
16140.2.02 LIGHTING TOGGLE SWITCHES
16140.2.03 CONVENIENCE RECEPTACLES
16140.2.04 BOXES
16140.2.05 PLATES AND COVERS

16140.3.01 INSTALLATION

SECTION 16190 – SUPPORTING DEVICES

16190.1.01 WORK INCLUDED

16190.1.02 REFERENCE STANDARDS

16190.2.01 CONDUIT SUPPORTS

16190.2.02 CHANNEL SUPPORTS

16190.2.03 ANCHOR METHODS

16190.3.01 INSTALLATION

SECTION 16450 – GROUNDING SYSTEM

16450.1.01 SCOPE OF WORK

16450.1.02 RELATED WORK

16450.2.01 MATERIALS

16450.3.01 GENERAL

16450.3.02 TESTS

SECTION 16495 – AUTOMATIC TRANSFER SWITCH

16495.1.01 SCOPE OF WORK

16495.1.02 CODES AND STANDARDS

16495.1.03 ACCEPTABLE MANUFACTURERS

16495.2.01 MECHANICALLLY HELD TRANSFER SWITCH

16495.2.02 MICROPROCESSOR CONTROLLER

16495.2.03 ENCLOSURE

16495.3.01 CONTROLLER DISPLAY AND KEYPAD

16495.3.02 VOLTAGE, FREQUENCY AND PHASE ROTATION SENSING

16495.3.03 TIME DELAYS

16495.3.04 ADDITIONAL FEATURES

16495.4.01 WITHSTAND AND CLOSING RATINGS

16495.4.02 TESTS AND CERTIFICATIONS

16495.4.03 SERVICE REPRESENTATION

THIS PAGE INTENTIONALLY LEFT BLANK

SECTION 1 - GENERAL

1.01 LOCATION OF THE WORK SITE AND ACCESS

Access to the work sites shall be over streets, and walkways. Any damage to existing pavement surface and base or other surface improvements outside the Contract Pay Limits, attributable to the Contractor's activities, shall be restored to like-new condition by the Contractor at the Contractor's expense.

The nearest addresses for the lift station rehabilitations are shown below:

Lift Station #	Nearest Address:
LS #4	1901 Pass-a-Grille Way, St. Pete Beach, FL 33706
LS #5	600 Pass-a-Grille Way, St. Pete Beach, FL 33706
LS #9	1360 Boca Ciega Isle Drive, St. Pete Beach, FL 33706
LS #10	7398 Sunset Way, St. Pete Beach, FL 33706
LS #11	490 82nd Avenue, St. Pete Beach, FL 33706
LS #12	401 93rd Avenue, St. Pete Beach, FL 33706
LS #13	5411 Pali Way, St. Pete Beach, FL 33706
LS #14	500 64th Avenue, St. Pete Beach, FL 33706
LS #15	650 56th Avenue, St. Pete Beach, FL 33706
SW LS #35	208 Pass-a-Grille Way, St. Pete Beach, FL 33706

1.02 SCOPE OF WORK

The Contractor shall furnish all labor, superintendence, materials, power, light, heat, fuel, water, tools, appliances, equipment, supplies, shop drawings, working drawings and other means of construction necessary or proper for performing and completing the work. The Contractor is responsible for obtaining all required permits necessary for the work, including all applications and review fees, other than those permits which may have already been obtained. The Contractor shall perform and complete the work in a speedy and efficient manner consistent with safety of life and property and to the satisfaction of the City, and in strict accordance with the Contract Documents. The Contractor shall repair or restore all structures and property damaged or disturbed during performance of the work.

The cost of incidental work described in this General Section, for which there are no specific Contract Items, shall be considered as part of the general cost of doing the work and shall be included in the prices for the various Contract Items. No additional payment will be made.

The Contractor shall be solely responsible for the means and methods of construction and the adequacy of his workmanship, materials and equipment.

1.03 PROJECT SUMMARY

The Contractor shall furnish all labor, material, equipment and incidentals necessary for rehabilitation of lift stations #4, 5, 9, 10, 11, 12, 13, 14, 15, and storm water lift station 35 including, but not limited to, temporary by-pass pumping, dewatering, gravity main connections, testing, site restoration, maintenance of traffic, and construction of elevated platforms including site fencing and access gates, water services, gravity main, manholes, air release valves, and appurtenances, pump replacement, cleaning of existing valve vaults and wet wells, and lift station control panel replacements. The work shall also include furnishing all labor, material, and equipment necessary for site restoration including but not limited to fill replacement, landscaping, irrigation, grading, clearing and grubbing, pavement repair and replacement, pavement striping, and concrete curb installation.

1.04 CONTRACT DRAWINGS AND SPECIFICATIONS

Where the Contract Drawings and Specifications are not in agreement, the Contract Drawings shall govern. The Contractor shall furnish all labor, equipment, and materials to construct the Project and all miscellaneous and appurtenant work complete in place as specifically described and included under said each Contract Pay Item as shown, specified, or directed by the Engineer in accordance with the obvious or expressed intent of the Contract.

The Technical Specifications for the Project that reference FDOT-SSRBC (Florida Department of Transportation - Standard Specifications for Road and Bridge Construction) pertain to the most recent edition at the date of issuance of these Specifications.

1.04.01 COPIES FURNISHED TO CONTRACTOR

The Contractor shall furnish each of the subcontractors, manufacturers, and material men such copies of the Contract Documents as may be required for their work. Additional copies of the Contract Drawings and Specifications, when requested, may be furnished to the Contractor at cost of reproduction.

1.04.02 SUPPLEMNTARY DRAWINGS

When, in the opinion of the City, it becomes necessary to explain more fully the work to be done or to illustrate the work further or to show any changes which may be required, drawings known as Supplementary Drawings, with specifications pertaining thereto, will be prepared by the Engineer and the City and provided to the Contractor.

1.04.03 CONTRACTOR TO CHECK CONTRACT DRAWINGS AND DATA

The Contractor shall verify all dimensions, quantities and details shown on the Contract Drawings, Supplementary Drawings, Schedules, Specifications or other data received from the City or the Engineer and shall notify the City and Engineer of all errors, omissions, conflicts, and discrepancies found therein. Failure to discover or correct errors, conflicts or discrepancies shall not relieve the Contractor of full responsibility for unsatisfactory work, faulty construction or improper operation resulting therefrom nor from rectifying such conditions at the Contractor's own expense. The Contractor shall assume

all responsibility for the making of estimates of the size, kind, and quality of materials and equipment included in work to be done under the Contract with approval by the City.

1.05 FIELD ENGINEERING

The Contractor shall establish and provide all vertical and horizontal control points for this Project including benchmarks. The Contractor shall provide the field layout surveying necessary to properly construct the work as indicated on the Contract Drawings.

All field layout surveying shall be performed under the supervision of a Professional Land Surveyor (Chapter 472, Florida Statutes). The Contractor shall submit the name and registration number of Surveyor as directed by the Engineer. The Engineer reserves the right to check all survey staking and to require adjustments or re-staking by the Contractor in the event that conflicts, or errors are detected.

Water pressure pipelines that are 8-inch or less diameter shall be installed with the required cover using horizontal control stakes provided by the Contractor. Storm drains, sanitary sewers, sanitary pressure pipelines, and water pressure pipelines greater than 8-inch diameter shall be installed using an approved method for line and grade control. Methods for line and grade control shall be submitted to the Engineer for review and acceptance, as specified for shop drawings. Sketches shall be provided by the Contractor showing vertical adjustment necessary for pressure pipelines to adequately clear storm drains and other utilities, unless otherwise shown on the Contract Drawings.

1.06 SAFEGUARDING SURVEY MARKS

The Contractor shall safeguard all existing property monuments, benchmarks, and other survey marks adjacent to and within the Project limits and shall bear the cost of re-establishing them if disturbed or destroyed.

1.07 INSPECTION AUTHORITY

The City or Engineer has ultimate responsibility for contract administration and inspection for this Project. The City or Engineer may assign field inspection responsibilities to a Design Professional and/or City Inspector. Each step of construction is subject to review and acceptance by the City or Engineer prior to proceeding with a subsequent step.

During the progress of the Work and up to the date of final acceptance, the Contractor shall at all times afford representatives of the City, the County, the State, the Department of Environmental Protection, the Department of Transportation, the Department of Labor, or any other agency with jurisdiction, every reasonable, safe, and proper facility for observation of the work done or being done at the site, and also the manufacture or preparation of materials and equipment at the place of such manufacture or preparation.

The Project line of authority will be presented at the Preconstruction Conference.

1.08 PROJECT SCHEDULE

The Contractor shall submit an electronic version in PDF form within 30 days following the Preconstruction Conference.
Scheduling and progress reporting shall be accomplished using a bar chart to provide a clear and concise comparison of progress.

1.09 MATERIALS AND EQUIPMENT

All materials, appliances, and types of construction shall be in accordance with the Technical Specifications and shall, in no event, be less than that necessary to conform to the requirements of any applicable laws, ordinances, and codes.

All materials and equipment to be incorporated into the Work shall be new, unused, and correctly designed. They shall be of standard first grade quality, produced by expert workmen, and be intended for the use for which they are offered. Materials or equipment which, in the opinion of the Engineer, are inferior or of a lower grade than indicated, specified, or required, will not be accepted.

Projects funded by the State Revolving Fund must comply with the requirements of the American Iron and Steel Requirement unless otherwise specified in the Contract Documents and approved by the Engineer.

1.10 MANUFACTURER

The names of proposed manufacturers, manufacturers' representatives, suppliers, and dealers who are to furnish materials, equipment, or other fittings, shall be submitted by the Contractor to the Engineer for review and acceptance. Such acceptance must be obtained before Shop Drawings will be accepted for review. All transactions with the manufacturer and subcontractors shall be through the Contractor.
Any two or more pieces of material or equipment of the same kind, type, or classification and being used for identical types of service, shall be made by the same manufacturer.

Projects funded by the State Revolving Fund must comply with the requirements of the American Iron and Steel Requirement unless otherwise specified in the Contract Documents and approved by the Engineer.

1.11 SAMPLES

The Contractor shall, when required, submit to the Engineer for review and acceptance, typical samples of material and appliances. The samples shall be properly identified by tags and shall be submitted sufficiently in advance of the time when they are to be incorporated into the Work so that rejections thereof will not cause delay. A letter of transmittal from the Contractor requesting approval shall accompany all such samples.

1.12 EQUIVALENT QUALITY

In the Contract Documents, whenever an article, material, apparatus, equipment, or process is called for by trade name or by name of a patentee, manufacturer, or dealer, or by reference to

catalog of a manufacturer or dealer, it shall be understood as intending to mean and specify the article, material, apparatus, equipment, or process designated, or any equal thereto in quality, finish, design, efficiency, and durability, and equally serviceable for the purposes for which it is intended.

Whenever material or equipment is submitted for review as being equal to that specified, the submittal shall include sufficient information and data to demonstrate that the material or equipment conforms to the Contract requirements. The decision as to whether such material or equipment is equal to that specified shall be made by the Engineer.

Upon rejection of any material or equipment submitted as the equivalent of that specifically named in the Contract, the Contractor shall immediately proceed to furnish the designated material or equipment.

Neither the acceptance by the Engineer of alternate material or equipment as being equivalent to that specified, nor the furnishing of the material or equipment specified, shall in any way relieve the Contractor of responsibility for failure of the material or equipment, due to faulty design, material, or workmanship, to perform the functions required of them by the Contract Documents.

1.13 MATERIAL AND EQUIPMENT DELIVERY AND STORAGE

The Contractor shall deliver materials in ample quantities to ensure the most speedy and uninterrupted progress of the work to complete the work within the allotted time. The Contractor shall also coordinate deliveries to avoid delay in, or impediment of, the progress of the work of any related contractor. The Contractor shall provide space for storage of materials and equipment.

Pipe strung along roads and rights-of-way shall be placed in a manner that will not endanger or restrict pedestrian or vehicular traffic. Pipe strings shall not be allowed outside right-of-way limits.

1.14 SERVICE OF MANUFACTURER'S REPRESENTATIVE

The Contract amount shall include but is not limited to the cost of furnishing a competent and experienced representative of the equipment manufacturer who shall assist the Contractor, when required, to install, adjust, test, and place in operation the equipment in conformity with the Contract Documents. After the equipment is placed in operation, the representative shall make all adjustments and tests required by the Engineer to prove that the installed equipment is in proper and satisfactory operating condition. The representative shall instruct personnel as may be designated by the Engineer in the proper operation and maintenance of such equipment.

1.15 CONTAMINANTS CONTAINMENT/DISPOSITION

Prior to the installation of well points for dewatering, the Contractor shall visually inspect the work area for indications of existing ground water monitoring, wells, or metal caps at grade. The Contractor shall review the work area for monitoring wells or abandoned fuel tanks and shall notify the Engineer in writing if any of the above items exist.

During dewatering activities, contractor to test water for contaminants before discharge. If the water is odorous, contaminated, or discolored (excluding tannic acid or iron), the Contractor shall stop the dewatering activities and shall notify the Engineer in writing of such, and request direction.

When work activities encounter or expose any abnormal condition that may indicate the existence of a hazardous or toxic waste, work activities shall stop in the vicinity of the abnormal condition and the Contractor shall notify the Engineer immediately. The presence of tanks or barrels; discolored earth, metal, wood, or groundwater; visible fumes; abnormal odors; excessively hot earth; smoke; or other conditions that appear abnormal, may be signs of hazardous or toxic wastes and shall be treated with extraordinary caution.

Every effort shall be made by the Contractor to minimize the spread of any hazardous or toxic waste into uncontaminated areas.

The Contractor's operations shall not resume until directed in writing by the Engineer.

Disposition of the hazardous or toxic waste will be made in accordance with the requirements and regulations of any City, County, State, or Federal agency having jurisdiction.

1.16 PREVENTION, CONTROL, AND ABATEMENT OF EROSION AND WATER POLLUTION

The Contractor shall be responsible for prevention, control, and abatement of erosion, siltation, and water pollution resulting from construction of the Project until final acceptance of the Project.

The Contractor shall implement all appropriate turbidity management practices at the point of discharge into a storm sewer, gutter, or other conveyance to ensure that state water quality standards are not violated at the point where the storm drain, gutter, or other conveyance discharges into a surface water.

All necessary provisions shall be taken to ensure compliance with the water quality standards of the State of Florida. Attention is called to Chapter 62-302, Florida Administrative Code, and in particular, the requirements that turbidity shall not exceed 29 NTUs above background level. Adequate silt containment procedures and equipment shall be used to control turbidity, at no additional cost to the City.

1.17 MAINTENANCE OF STORM DRAINAGE SYSTEM

The Contractor shall be responsible at all times to maintain the operation of existing stormwater facilities, or, when existing stormwater facilities are removed, to provide equivalent capacity alternate forms of stormwater removal adequate to prevent upstream flooding in excess of existing conditions. This responsibility shall include but is not limited to the installation of temporary connections, bypass pumping, or other temporary means necessary until the new drainage system is fully operational.

1.18 SPILL OR DISCHARGE OF WASTEWATER OR RECLAIMED WATER

The discharge of wastewater or effluent (reclaimed water) into waters of the State and/or into canals, ditches, and ponds that are connected to waters of the State is prohibited. Any spill or

discharge of wastewater or reclaimed water shall be immediately reported to the Engineer, the City's Project Manager, and the City's Emergency Dispatch Center. Contact information will be provided for all necessary City personnel and the Engineer at the Preconstruction Conference. In the event of a spill or discharge, the Contractor shall immediately control, contain, and stop the spill or discharge and shall repair any damage to the City's facilities.

The Contractor shall be responsible for any penalties and costs charged to the City by the FDEP and for all costs incurred by the City as a result of the Contractor's actions or as a result of the Contractor's negligence. The fines, and anticipated costs, which may be incurred by the City as a result of the Contractor's actions or negligence, shall be paid to the City within 30 days, or the costs incurred will be deducted from the total Contract amount.

1.19 SEQUENCE OF OPERATION

1.19.01 PIPELINE WORK

It is the intent of the City that all pipeline work associated with the Project be installed to completion in a timely and orderly manner to minimize inconvenience to the Public. Pipe and pipe materials shall not be stored or strung in residential areas more than 3 weeks in advance of pipe installation unless otherwise approved by the Engineer.

The Contractor shall include in the Project Schedule a Sequence of Operations including, but not limited to, the following components:

A. Pipe and pipe material storage
B. Bypassing Pumping
C. Backfilling
D. Testing and repairs
E. Surface Restoration and Cleanup

1.19.02 PUMP/LIFT STATION WORK

It is essential that any Project work conducted at Pump/Lift Station sites be sequenced to minimize obstruction of normal daily operations of the Pump/Lift Station.

The Contractor shall include in the Project Schedule a Sequence of Operations including, but not limited to, the following components:

A. Equipment and material storage
B. Bypassing Pumping
C. Testing and repairs
D. Surface Restoration and Cleanup

1.19.03 MISCELLANEOUS

Utility Companies may be present on the work site adjusting their facilities and installing new facilities. The Contractor's work shall be scheduled in such a manner as to minimize conflicts with various utility companies.

The Contractor shall clean up the site for each phase of work in accordance with the Contract Documents and confine work and personnel to designated areas in accordance with the Specifications. Before proceeding to a subsequent phase of work, unless otherwise approved by the Engineer.

1.19.04 NO TIME EXTENSION

If the Engineer orders construction, or a phase of construction, to be stopped due to the Contractor's neglect to adhere to the Sequence of Operations as outlined herein, the Stop Work Order shall not constitute a basis for extension of time.

1.20 WORK IN STREETS AND HIGHWAYS

All work within streets and highways shall be subject to the regulations and requirements of the City of St. Pete Beach, FDOT, and all other agencies with jurisdiction of the streets and highways in the work limits.

Methods and materials of construction used in restoration within such streets and highways shall conform to the requirements, inspection, and acceptance of the duly authorized representatives of the appropriate agency having jurisdiction. Restoration Work shall include but not be limited to: removal and replacement of pavement, sidewalk, curb, and gutter; replacement of storm sewer facilities; excavation and backfilling; and storage of materials and equipment.

1.21 WORK IN PRIVATE PROPERTY

The Contractor shall not trespass upon or in any way disturb private property without first obtaining written permission from the City to do so. In the event that, in the opinion of the Contractor, obtaining a temporary construction easement outside the limits of the right-of-way, of City-owned property, or of the easement(s) obtained by the City is necessary or desirable, it shall be the sole responsibility of the Contractor to obtain such easement from the owner of the property. If such easement is obtained by the Contractor, it shall contain provision to hold the City harmless from any operations of the Contractor within the easement limits. The Contractor shall not conduct construction operations on private property outside the limits of the right-of-way, of City-owned property, or of the easement(s) obtained by the City unless a copy of the Temporary Construction Easement Agreement is filed with the Engineer. It shall be the Contractor's responsibility to work equipment around poles, trees, or other obstructions and to do so at his own expense. The Contractor shall ensure all employees have a badge or visible identification during any time that they on the project site or within private property. This identification must be worn so that it is readily recognized and readable to the public.

Upon completion of work in easements, the Contractor shall, at no additional expense, restore the property, including all fences or other structures disturbed by his operations, to the full satisfaction of the City and shall obtain from the City a written release stating that restoration has been satisfactorily made. A copy of the completed written release shall be furnished to the City prior to payment. All items within the street right-of-way or sewer easement shall be removed, or removed and replaced, or restored as directed by the City.

1.22 PERMITS

Construction projects performed for the City will require licenses and permits in the same manner as private construction projects within the City.

The Contractor shall secure, at his expense, all licenses and permits, and shall comply with all applicable laws, regulations, and codes as required by the State of Florida and/or the City of St. Pete Beach whether performed by the Contractor or by others. The Contractor must be registered to complete such work within Pinellas County.

1.23 FIELD OFFICE AND APPURTENANT STRUCTURES

No field office or appurtenant structures by the Contractor, any subcontractor, or any material supplier, will be allowed on the Project site.

Space on City property or rights-of-way proposed to be used for storage and a field office for the Contractor shall be approved by the Engineer prior to installation providing such uses will not interfere in any manner with the construction of the work or the operation of existing facilities.

1.24 CONTRACTOR'S SIGN

No sign by the Contractor, any subcontractor, or any material supplier, will be allowed on the Project site.

1.25 MOBILIZATION

Mobilization shall include but is not limited to all preparatory work and operations necessary to begin the Project, including moving of personnel, equipment, traffic control, and all else necessary to commence work. The cost of bonds, insurance, shop drawings, and preconstruction expenses shall also be included.

If a separate Pay Item is included for mobilization, payment will be as specified for that Pay Item. If no Pay Item is included, costs for mobilization shall be included with the costs for the major Work items included in the Proposal.

1.26 WATER PURCHASE

Water used in connection with this Project must be coordinated with Pinellas County. Reclaimed water used in connection with this Project must be coordinated with the City.

1.27 TRAFFIC CONTROL

The Contractor shall provide required traffic controls under City observation. The Contractor shall notify the City's Project Manager a minimum of 2 working days prior to any construction affecting traffic flow. A Maintenance of Traffic plan drawing shall be submitted for review by the Engineer prior to each lane closure or opening during construction. All traffic control devices utilized during construction shall be provided by the Contractor and meet the requirements set forth in the latest revision of U.S. Department of Transportation Federal Highway Administration's "Manual on

Uniform Traffic Control Devices for Streets and Highways" and the Florida State Department of Transportation's "Standard Plans for Road and Bridge Construction." Failure or refusal, on the part of the Contractor, to install, maintain and/or position traffic control devices promptly, fully, and in an acceptable manner, shall be sufficient cause for the City, after 24-hour notice, to perform the traffic control with its own organization, or to contract with any other individual, firm, or corporation to perform the required traffic control. All costs and expenses incurred thereby shall be charged against the defaulting Contractor, and the amount thereof deducted from any money due, or which may become due him, or shall be charged against the Contract Bond. Any Work performed as described by this paragraph, shall not relieve the Contractor in any way of his responsibility for the Work performed by him.

Traffic shall be performed so that vehicular traffic shall be maintained on with at least one 10-foot wide lane in each direction at all times. An acceptable detour route shall be developed by the Contractor to redirect traffic when and where necessary, with the approval of the Transportation Special Events Division. Temporary lanes shall be constructed with a minimum 1-inch thick asphaltic concrete surface over a 6-inch thick limerock base compacted to 98% of the maximum density in accordance with AASHTO T-180.

Failure of the Contractor to comply with any of the above traffic control requirements may result in issuance of a stop work order until the violation is corrected.

All maintenance of traffic in the FDOT right-of-way shall be in accordance with FDOT requirements.

1.28 TREE PROTECTION

Particular care shall be taken by the Contractor to protect trees during construction by erecting approved barricades to prevent unnecessary damage to trunk and roots during construction. Such barriers shall protect the area within the dripline.

The Contractor shall prune all branches that interfere with construction in accordance with American Forestry Association Standards. Roots over 2-inch diameter shall be preserved wherever possible. If root pruning is required, roots shall be cut cleanly.

Temporary soil deposits, concrete block, concrete wash, or solvents shall not be placed within the dripline. The grade within the dripline shall be preserved. If adjacent grade is altered, protective measures such as those described in the Florida State Division of Forestry "Tree Protection Manual for Builders and Developers" shall be constructed to protect the tree(s) from deleterious effects of the grade change.

1.29 TREE REMOVAL AND REPLACEMENT

The Contractor shall obtain any necessary tree removal permit, shall furnish and replace trees as required, and shall perform this Work in a manner conforming to all applicable provisions of said regulations or permit.

The cost of tree removal and obtaining the tree removal permits shall be included in the cost of the appropriate associated Contract Pay Item under which the Work is to be performed. The Contractor shall remove trees as required and approved by the Engineer whether or not said trees are shown

on the Contract Drawings. Trees that must be removed, except for Australian pine, Brazilian pepper, punk, and other exempt species, shall be replaced as directed. Replacement trees shall be of native species at least 8-feet tall and at least 3-inch caliper diameter.

1.30 UTILITIES

Prior to construction, the Contractor shall familiarize himself with the location of all existing utilities and facilities within the Project Site. The Contractor must take the necessary precautions for the protection of any utility encountered on the Project or the restoration of any utility damaged during the work.

If excavation is required, The Contractor shall notify, at least 48 hours before breaking ground, all public or private service corporations having wire, poles, pipes, conduit, manholes, or other structures that may be affected by this operation, including all structures which are affected and not shown on these plans. Utility companies shall be contacted by calling the utility notification center "Sunshine 811" at 1-800-432-4770. Owners which are not members of the state's One Call service must be called directly. The City will furnish to the Contractor the available records of City utilities. The Contractor shall locate and mark all City utilities for his reference and for use by utility companies. The Contractor shall act as the City's agent for locating and marking City underground utilities within the Project limits, in accordance with the Florida Underground Facilities Damage Prevention and Safety Act (FS 556).

In all cases where existing utility lines may be interfered with by the work, the Contractor shall give a minimum of 48 hours' notice (excluding Saturdays, Sundays, and legal holidays) to the owners of such utilities to permit them to relocate the lines prior to construction. Existing utilities have been shown on the Contract Drawings insofar as information is reasonably available. However, it will be the Contractor's responsibility to preserve all existing utilities whether shown on the Contract Drawings or not. All maintenance, repair, and replacement of existing utilities shall be in accordance with the rules and regulations of the various utility companies having jurisdiction. All existing storm sewers, driveway drains, surface drainpipes and other property, removed or damaged during construction shall be repaired and reconnected by the Contractor as directed by the City at no additional cost to the City.

1.31 NEIGHBORHOOD NOTIFICATION

Not less than 7 days prior to the commencement of Work in the right-of-way, the Contractor shall notify all residents and businesses along the construction route with a printed door hanger notice indicating the scheduled date of construction, the type of construction, and the Contractor's and Superintendent's contact information. The door hanger text and a list of residents and businesses to which the notification has been delivered shall be compiled and submitted to the Engineer prior to the Contractor commencing Work.

1.32 SHOP, FIELD, AND LABORATORY TESTING

The Engineer may require testing by certified personnel of certain materials to be incorporated in the Work, such as: soils density, pavement, concrete pipe and appurtenances, and welds.

In the event any such testing is required by the Engineer; a detailed description will be found in

these Technical Specifications concerned with the specific item of Work.

Where reference is made for design mixes, tests of materials, or work performed, or where in the opinion of the Engineer, tests are required to ascertain compliance with the Specifications, the Contractor shall have such tests made by an approved testing laboratory. No additional payment will be made for these tests.

1.33 SALVAGED MATERIALS

The Contractor shall not proceed with demolition of existing materials or equipment without review and acceptance from the Engineer for the method of disposal.

All materials which are not returned to the City yard shall be disposed in an approved disposal site. The Engineer may request confirmation of the site's approval for disposal of the specific materials.

Salvaged materials shall be loaded on Contractor trucks and returned to the Public Services yard at 7581 Boca Ciega Drive, St. Pete Beach, Florida. The City will designate the specific location at the yard for placement of salvaged materials by the Contractor.

The following materials shall be removed and returned by the Contractor: pumps and pump rails, and all other materials as directed by the Engineer.

1.34 PRECONSTRUCTION VIDEO

The Contractor shall provide continuous color audio-video recording of the entire proposed work areas/construction areas prior to construction to serve as a record of pre-construction conditions. Audio-video recording must be supplemented with digital color photographs for areas which require details not ascertainable on the recording. The Preconstruction Video shall be delivered to the Engineer on nonreturnable USB compatible flash drives. The USB drive shall be new and thus shall not have been used for any previous recording.

The proposed work/construction area shall include, but not be limited to, all areas used for construction of the proposed improvements, temporary construction, stockpile areas, staging and storage areas, and entry and exit points used by equipment, delivery vehicles, service vehicles, and other vehicles used for transport of labor, equipment, and materials to the job site.

The preconstruction audio-video recording shall be of professional quality that will clearly log an accurate visual description of existing conditions. Any portion of the digital recording that is determined by the Owner or Engineer to be not acceptable in the documentation of the existing condition shall be re-filmed at no additional cost to the Owner.

The general requirements of the Preconstruction Video are as follows:

A. The recordings shall contain coverage of all surface features located within the construction area and plus access routes used to reach the construction area. The recording shall include all surface conditions supported by appropriate audio description.

B. The surface features documented in the recordings shall include, but not be limited to, all driveways, sidewalk, curb, gutter, buildings, walls, storage sheds, swales, culverts, headwalls, landscaping, trees, shrubbery, pull boxes, valve boxes, concrete pads, power poles, mailboxes, and fences.

C. The recordings shall also document the existence or nonexistence of any faults, fractures, or defects, and existing man-made material such as debris, construction stockpiles, trash, and fuel containers.

D. The audio and video portions of the recording shall maintain viewer orientation. To this end, overall establishing views and visual displays of all visible house and building addresses shall be utilized. In easements where the proposed construction location will not be readily apparent in the recorded video, highly visible yellow flags shall be placed in such a fashion as to clearly indicate the proposed centerline of construction.

E. When video recording on private property, the Contractor shall give the Owner sufficient prior notice of such entry so that property owners may be advised of, and their permission obtained for, the Work.

F. All video recording shall be done during regular business hours, unless otherwise specified by the private property owner or the Engineer. The Contractor shall enter and leave private property in a professional and orderly, workmanlike manner.

G. Each video recording shall have a simultaneous recorded audio recording. This audio recording, exclusively containing the commentary of the camera operator, shall assist in viewer orientation and in any needed identification, differentiation, clarification, or objective description of the feature being shown in the video portion of the recording. The audio recording also shall be free from any conversations between the camera operator and any other production technicians.

H. The total video recording system and the procedures employed in its use shall be such as to produce a finished product that will fulfill the technical requirements of the project. The digital portion of the recording shall produce bright, sharp, clear pictures with accurate colors and shall be free from distortion, tearing, rolls or any other form of picture imperfection. The audio portion of the recording shall produce the commentary of the camera operator with proper volume, clarity, and be free from distortion. The recording system shall utilize EIA standard video and RGB compatible video.

I. All video recordings shall be labeled and shall be properly identified by video number, Project title, and date(s) of the recording.

J. Each video shall have a log of that video's contents. The log shall describe the various segments of coverage contained on that video in terms of the names of streets or easements, coverage beginning and end, directions of coverage, and video unit counter numbers.

1.35 SITE MANAGEMENT

The Contractor shall prepare and maintain site management logs throughout construction that documents completion of maintenance activities such as dust control, setup and MOT checks, street sweeping, etc. At a minimum, these logs shall include the date, action taken, approximate location (if the construction area changes through the duration of the project), time of day, and initials of staff involved. Dust control measures shall be recorded daily in the morning and afternoon, MOT shall be recorded daily in the morning, afternoon, and end of day, and street sweeping will be logged once per day.

Site management logs shall be submitted to the City and the Engineer on a bi-weekly basis unless otherwise requested, and in accordance with **Section 3** of these Technical Specifications.

END OF SECTION

SECTION 2 - PAY ITEM DESCRIPTIONS

2.01 SCOPE

The scope of this section of the Contract Documents is to further define the items included in each Pay Item in the Bid Form section of the Contract Documents. Payment will be made based on the specified items included in the description in this section for each Pay Item.

All contract prices included in the Bid Form section will be full compensation for all shop drawings, working drawings, labor, materials, tools, equipment, and incidentals necessary to complete the construction as shown on the Contract Drawings and/or as specified in the Contract Documents to be performed under this Contract. Actual quantities of each item bid on a unit price basis will be determined upon completion of the construction in the manner set up for each item in this section of the Specifications. Payment for all items listed in the Bid Form will constitute full compensation for all work shown and/or specified to be performed under this Contract.

2.02 ESTIMATED QUANTITIES

The quantities shown are approximate and are given only as a basis of calculation upon which the award of the Contract is to be made. The City does not assume any responsibility for the final quantities, nor shall the Contractor claim misunderstanding because of such estimate of quantities. Final payment will be made only for satisfactorily completed quantity of each item.

2.03 WORK OUTSIDE AUTHORIZED LIMITS

No payment will be made for work constructed outside the authorized limits of work.

2.04 MEASUREMENT STANDARDS

Unless otherwise specified for the particular items involved, all measurements of distance shall be taken horizontally or vertically.

2.05 AREA MEASUREMENTS

In the measurement of items to be paid for on the basis of area of finished work, the lengths and/or widths to be used in the calculations shall be the final dimensions measured along the surface of the completed work within the neat lines shown or designated.

2.06 LUMP SUM ITEMS

Where payment for items is shown to be paid for on a lump sum basis, no separate payment will be made for any item of work required to complete the lump sum items. Lump sum contracts shall be complete, tested and fully operable prior to request for final payment. Contractor may be required to provide a break-down of the lump sum totals.

2.07 PAY ITEM DESCRIPTIONS

Separate payment will be made for the items of work described herein and listed on the Bid Form. Any related work not specifically listed but required for satisfactory completion of the work shall be considered to be included in the scope of the appropriate listed work items.

No separate payment will be made for the incidental items not included in the Pay Item descriptions. The cost to complete such work shall be included in the applicable Pay Item unit cost. Final payments shall not be requested by the Contractor or made by the City until as-built (record) drawings have been submitted and approved by the City. Incidental items include, but are not limited to:

1. Shop Drawings, Working Drawings.
2. Clearing, grubbing and grading except as hereinafter specified.
3. Trench excavation, including necessary pavement removal and rock removal, except as otherwise specified.
4. Dewatering and disposal of surplus water.
5. Structural fill, backfill, and grading.
6. Replacement of unpaved roadways, and shrubbery plots.
7. Foundation and borrow materials, except as hereinafter specified.
8. Testing and placing system in operation.
9. Any material and equipment required to be installed and utilized for the tests.
10. Pipe, structures, pavement replacement, driveways and/or appurtenances included within the limits of lump sum work, unless otherwise shown.
11. Maintaining the existing quality of service during construction.
12. Appurtenant work as required for a complete and operable system.
13. Seeding and hydro mulching.
14. As-built Record Drawings, clean up, and miscellaneous work.

PAY ITEM NO. 1 – MOBILIZATION

Mobilization shall be the preparatory work and operations in mobilizing for beginning work on the project, including, but not limited to, those operations necessary for the movement of personnel, equipment, supplies and incidentals to the project site, and for the establishment of temporary offices, storage buildings, staging areas, maintaining traffic, safety equipment and first aid supplies, sanitary and other facilities, and installation of tree protection measures as required by the Contract Documents and applicable laws and regulations. The costs of submittals, bonds, required insurance, permits and any other preconstruction expense necessary for the start of the work, excluding the cost of construction materials, shall also be included in this item. Demobilization shall be the work of removing temporary facilities from the site, cleanup and restoration. Mobilization/Demobilization shall be limited to a maximum of ten percent (10%) of the total Bid Price.

Payment for mobilization/demobilization will be made on an incremental basis in accordance with the following:

Percent of Original Contract Amount:	Percent Allowable Payment of Mobilization/Demobilization Pay Item Price:
5	25
10	35
25	45
50	50
75	75
100	100

These payments will be subject to the standard retainage provided in the Contract. Payment of the retainage will be made after completion of the work and demobilization.

PAY ITEM NO. 2 – MAINTENANCE OF TRAFFIC

Payment for all work included, but is not limited to, under this Pay Item shall represent full compensation in accordance with the lump sum price bid for all maintenance of traffic, including coordination with the City and FDOT, and all equipment and labor necessary to comply with the FDOT Standard Plans Index 102 Series for Maintenance of Traffic.

Measurement for periodic payments of this lump sum Pay Item will be in accordance with the approved Schedule of Values, to be supplied by the Contractor in accordance with the Contract Documents.

PAY ITEM NO. 3 – EROSION AND SEDIMENT CONTROL

Payment for all work included, but is not limited to, under this Pay Item shall represent full compensation in accordance with the lump sum price bid for erosion and sediment control.

Measurement for periodic payments of this lump sum Pay Item will be in accordance with the approved Schedule of Values, to be supplied by the Contractor in accordance with the Contract Documents.

PAY ITEM NO. 4 – BYPASS PUMPING

Payment for all work included, but is not limited to, under this Pay Item shall represent full compensation in accordance with the lump sum price bid for all by-pass pumping. Cost includes all equipment and labor necessary to successfully bypass during construction in compliance with the Contract Documents.

Measurement for periodic payments for this lump sum Pay Item will be in accordance with the approved Schedule of Values, to be supplied by the Contractor in accordance with the Contract Documents.

PAY ITEM NO. 5 – PROJECT RECORD DOCUMENTS (AS-BUILT DRAWINGS AND O&M MANUALS)

Payment for all work included, but is not limited to, under this Pay Item shall represent full compensation in accordance with the lump sum price bid for as-built record drawings or any other required certifications to put proposed system in service and operation and maintenance manuals for all proposed equipment. All items are subject to approval by the Engineer.

Measurement for periodic payments of this lump sum Pay Item will be in accordance with the approved Schedule of Values, to be supplied by the Contractor in accordance with the Contract Documents.

PAY ITEM NO. 6 – CLEANING EXISTING VALVE VAULT INCLUDING REMOVAL OF DEBRIS AND SAND BLASTING AND RECOATING OF EXISTING FITTINGS

Payment for all work included, but is not limited to, under this Pay Item shall represent full compensation in accordance with the lump sum price bid for cleaning of existing valve vault including the removal of any debris and sand blasting and recoating of existing fittings. Sand blasting and recoating existing fittings includes removal, cleaning, surface preparation, exterior coating, and reinstalling the fitting in accordance with the Construction Drawings and Specifications. Payment includes any and all items necessary to complete work and shall represent full compensation for all labor, materials, necessary equipment, and incidentals necessary to complete the work, ready for approval and acceptance by the City.

Measurement for periodic payments of this lump sum Pay Item will be in accordance with the approved Schedule of Values, to be supplied by the Contractor in accordance with the Contract Documents.

PAY ITEM – ELECTRICAL EQUIPMENT RACK

Payment for all work included in this Pay Item shall represent full compensation in accordance with the lump sum price bid for furnishing and installing the listed electrical equipment including stainless steel unistrut rack, electric meter in aluminum enclosure, main disconnect, automatic transfer switch, pump control panel including VFDs as shown, junction box, relocation of existing SCADA panel, conduit, wiring, ground ring, and connection to existing electrical service. This Bid Item shall also include installation of all control panel components, installing pump motor leads, testing of power and control wiring to each submersible pump, and all other materials and equipment necessary for a complete and fully operable system, including testing and start-up, as shown on the Contract Documents.

Measurement for periodic payments of this lump sum Pay Item will be in accordance with the approved Schedule of Values, to be supplied by the Contractor in accordance with the Contract Documents.

PAY ITEM	DESCRIPTION	UNITS
7	ELECTRICAL EQUIPMENT RACK INCLUDING PUMP CONTROL PANEL (5 HP - 7.5 HP), METER, MAIN DISCONNECT, AUTOMATIC TRANSFER SWITCH, JUNCTION BOX, AND RELOCATION OF SCADA PANEL	LS
8	ELECTRICAL EQUIPMENT RACK INCLUDING PUMP CONTROL PANEL (12 HP WITH VFD), METER, MAIN DISCONNECT, AUTOMATIC TRANSFER SWITCH, JUNCTION BOX, AND RELOCATION OF SCADA PANEL	LS

PAY ITEM NO. 9 – ELEVATED PLATFORM

Payment for all work included in this Bid Item will be made at the applicable Contract lump sum price for furnishing and installing the elevated platform as shown on the Contract Drawings and as described in the Specifications. This Bid Item shall include the foundation, top concrete slab, columns, beams, stairs, stairs slab, and aluminum railings, placed and installed as shown on the Contract Documents. This Bid Item includes steel reinforcement and all associated work. Payment shall represent full compensation for all labor, materials, and equipment for mixing, placing, forming, finishing, and curing of the concrete, any required excavation, including rock as necessary, bedding, backfill, compaction, dewatering, sheeting, testing, and incidentals necessary to complete the work, ready for approval and acceptance by the City.

Measurement for periodic payments of this lump sum Pay Item will be in accordance with the approved Schedule of Values, to be supplied by the Contractor in accordance with the Contract Documents.

PAY ITEM NO. 10 – BACKUP GENERATOR, ENCLOSURE, AND SUB-BASE FUEL TANK

Payment for all work included in this Bid Item will be made on a lump sum basis and will include the direct cost for furnishing and installing the backup diesel generator, enclosure, and sub-base fuel tank, in accordance with Construction Drawings and Specifications. Payment shall represent full compensation for all labor, materials, necessary equipment, and incidentals necessary to complete the work, ready for approval and acceptance by the City.

Measurement for periodic payments of this lump sum Pay Item will be in accordance with the approved Schedule of Values, to be supplied by the Contractor in accordance with the Contract Documents.

PAY ITEM NO. 11 – SITE LIGHTING

Payment for all work included in this Bid Item will be made at the applicable Contract lump sum price for furnishing and installing site lighting as shown on the Contract Drawings and as described in the Specifications. This Bid Item shall include the lighting foundation, conduit, grounding wire, aluminum pole with hand hole, and LED site light placed and installed as shown on the Contract Documents. This Bid Item includes concrete reinforcement and all associated work. Payment shall represent full compensation for all labor, materials, necessary equipment, and incidentals necessary to complete the work, ready for approval and acceptance by the City.

Measurement for periodic payments of this lump sum Pay Item will be in accordance with the approved Schedule of Values, to be supplied by the Contractor in accordance with the Contract Documents.

PAY ITEM NO. 12 – 6 FEET TALL VINYL PRIVACY FENCE

Payment for all work included under this Pay Item will be made at the Contract unit bid per linear foot for the purchase and installation of the 6-feet vinyl privacy site fence in accordance with the Construction Drawings and Specifications. Payment includes any required excavation, including rock as necessary, bedding, backfill, dewatering, sheeting, and any and all other items necessary to complete work. Measurement will be based on the actual number of linear footage of vinyl fence furnished, installed, and approved. Payment shall represent full compensation for all labor, materials, equipment, and incidental items necessary to complete the work.

PAY ITEM NO. 13 – 6 FEET TALL, 4 FEET WIDE VINYL PRIVACY ACCESS GATE

Payment for all work included, but is not limited to, under this Pay Item shall represent full compensation in accordance with the lump sim price bid for furnishing and installing of the 6 feet tall, 4 feet wide vinyl privacy access gate in accordance with the Construction Drawings. Payment includes any required excavation, including rock as necessary, bedding, backfill, dewatering, sheeting, and any and all other items necessary to complete work.

Measurement for periodic payments of this lump sum Pay Item will be in accordance with the approved Schedule of Values, to be supplied by the Contractor in accordance with the Contract Documents.

PAY ITEM NO. 14 – CURB INSTALLATION

Payment for all work included under this Pay Item will be made at the Contract unit price bid per linear foot for furnishing and placing curb as shown on the Drawings and listed in the Bid Form. Measurement will be per actual number of linear feet of curbing installed. Payment shall represent full compensation for all labor, material and equipment for compacting subgrade, forming, furnishing, placing the concrete, and finishing as specified and all incidentals necessary for completion of this Pay Item, in accordance with Specifications.

PAY ITEM NO. 15 – POTABLE WATER SERVICE AND HOSE BIB RELOCATION

Payment for all work included, but is not limited to, under this Pay Item shall represent full compensation in accordance with the lump sum price bid for the proposed connection to existing water main, relocation of existing water service line including but not limited to excavation, including rock, dewatering, sheeting, bedding and backfill, compaction, testing, detectable warning tape, locator wire, and installation of the proposed hose bib assembly and piping, as shown in the Construction Drawings. Payment shall represent full compensation for all labor, materials, necessary equipment, and incidentals necessary to complete the work, ready for approval and acceptance by the City.

Measurement for periodic payments of this lump sum Pay Item will be in accordance with the

approved Schedule of Values, to be supplied by the Contractor In accordance with the Contract Documents.

PAY ITEM NO. 16 – DEMOLITION

Payment for all work included, but is not limited to, under this Pay Item shall represent full compensation in accordance with the lump sum price bid for, including but not limited to the demolition of landscaping including trees, control panel, asphalt, manhole, curb, air release valve, concrete pad, air release valve cabinet, piping, and site fencing as shown on the contract documents. Payment includes disposal and any required excavation, including rock as necessary, bedding, backfill, dewatering, sheeting, and any and all other items necessary to complete work. Any equipment in working condition shall be salvaged as requested by the City.

Measurement for periodic payments of this lump sum Pay Item will be in accordance with the approved Schedule of Values, to be supplied by the Contractor in accordance with the Contract Documents.

PAY ITEM – ELECTRICAL I&C

Payment for all work included in this Pay Item shall represent full compensation in accordance with the lump sum price bid for furnishing and installing the listed pump control panel replacements including removal of the existing panel, installation of pump control panel with generator receptacle, modifications to the existing electrical equipment rack including but not limited to raceways, concrete posts, and concrete pad as necessary for the proposed pump control panel. This Bid Item shall include installation of all control panel components, installing conduit and pump motor leads, testing of power and control wiring to each submersible pump, and all other materials and equipment necessary for complete a complete a fully operable system, including testing and start-up, all as shown on the Contract Documents.

Measurement for periodic payments of this lump sum Pay Item will be in accordance with the approved Schedule of Values, to be supplied by the Contractor in accordance with the Contract Documents.

PAY ITEM	DESCRIPTION	UNITS
17	ELECTRICAL I&C (5 HP – 7.5 HP PUMP CONTROL PANEL REPLACEMENT)	LS
18	ELECTRICAL I&C (35 HP PUMP CONTROL PANEL REPLACEMENT, WITH SOFT STARTER)	LS

PAY ITEM NO. 19 – CLEAN WETWELL INCLUDING SAND/DEBRIS PUMP OUT

Payment for all work included, but is not limited to, under this Pay Item shall represent full compensation in accordance with the lump sum price bid for existing wet well cleaning. Existing wet wells shall be cleaned in accordance with the Construction Drawings. Payment includes any and all items necessary to complete work. Payment shall represent full compensation for all labor, materials, necessary equipment, and incidentals necessary to complete the work, ready for approval and acceptance by the City.

Measurement for periodic payments of this lump sum Pay Item will be in accordance with the approved Schedule of Values, to be supplied by the Contractor in accordance with the Contract Documents.

PAY ITEM NO. 20 – 2" S.S. AIR RELEASE VALVE (ABOVE GROUND)

Payment for all work included, but is not limited to, under this Pay Item shall represent full compensation in accordance with the lump sum price for installation of a 2" stainless steel air release valve including air release valve body, concrete pad, underdrain, piping, valve, and connection to existing force main. Payment shall represent full compensation for all labor, materials, necessary equipment, and incidentals necessary to complete the work, ready for approval and acceptance by the City.

Measurement for periodic payments of this lump sum Pay Item will be in accordance with the approved Schedule of Values, to be supplied by the Contractor in accordance with the Contract Documents.

PAY ITEM NO. 21 – FORCE MAIN DETECTABLE WARNING TAPE

Payment for all work included in this Pay Item shall be made at the applicable Contract unit price bid per the schedule of prices for furnishing and installing force main detectable warning tape as shown in the Contract Documents and listed on the Bid Form.

Measurement and Payment shall be made for the actual length of detectable warning tape installed, approved, certified, and placed into operation and will represent full compensation for all labor, materials and equipment required to complete these Pay Items, including but not limited to excavation, including rock, dewatering, sheeting, bedding and backfill, compaction, coordination with other utilities that are disturbed during construction, protection of existing facilities and structures, and all other incidentals for complete installation. No additional compensation shall be made for excavation below the bottom of the pipe, rock removal, bedding and backfill material, or for repair of any trench settlement. No additional compensation shall be made for extensive dewatering.

PAY ITEM NO. 22 – 6 FEET TALL, 12 FEET WIDE VINYL PRIVACY DOUBLE GATE

Payment for all work included, but is not limited to, under this Pay Item shall represent full compensation in accordance with the lump sim price bid for the purchase and installation of the 12-feet vinyl double door swinging access gate in accordance with the Construction Drawings and Specifications. Payment includes any required excavation, including rock as necessary, bedding,

backfill, dewatering, sheeting, and any and all other items necessary to complete work.

Measurement for periodic payments of this lump sum Pay Item will be in accordance with the approved Schedule of Values, to be supplied by the Contractor in accordance with the Contract Documents.

PAY ITEM NO. 23 – RECLAIMED WATER SERVICE AND HOSE BIB RELOCATION

Payment for all work included, but is not limited to, under this Pay Item shall represent full compensation in accordance with the lump sum price bid for the proposed connection to existing water main, relocation of existing water service line including but not limited to excavation, including rock, dewatering, sheeting, bedding and backfill, compaction, testing, detectable warning tape, locator wire, and installation of the proposed hose bib assembly and piping, as shown in the Construction Drawings. Payment shall represent full compensation for all labor, materials, necessary equipment, and incidentals necessary to complete the work, ready for approval and acceptance by the City.

Measurement for periodic payments of this lump sum Pay Item will be in accordance with the approved Schedule of Values, to be supplied by the Contractor In accordance with the Contract Documents.

PAY ITEM NO. 24 – SHELL RESTORATION

Payment for all work included in these Bid Items will be made at the applicable Contract unit price bid per cubic yard of shell restoration as listed on the Bid Form. Density for backfill compaction shall be 95% per AASHTO T-180 density. Measurement of restoration will be per the actual number of cubic yards installed. Contractor shall match existing shell/rock material. Payment shall represent full compensation for all labor, materials and equipment for compacting subgrade, furnishing and installing the shell/rock, including all incidentals necessary to complete the restoration as shown on the Contract Drawings and included in the Specifications, all ready for approval and acceptance by the City.

END OF SECTION

THIS PAGE INTENTIONALLY LEFT BLANK

SECTION 3 - SUBMITTALS

3.01 GENERAL

When used in the Contract Documents, the term "Shop Drawings" shall be considered to mean Contractor's plans for material and equipment which become an integral part of the Project. These drawings shall be complete and detailed. Shop Drawings shall consist of fabrication, drawings, setting drawings, schedule drawings, manufacturer's scale drawings and wiring and control diagrams. Cuts, catalogs, pamphlets, descriptive literature and performance and test data, shall be considered only as supportive to required Shop Drawings as defined above.

Data on materials and equipment shall include, without limitation, materials and equipment lists, catalog sheets, cuts, performance curves, diagrams, materials of construction and similar descriptive material. Materials and equipment lists shall give, for each item thereon, the name and location of the supplier or manufacturer, trade name, catalog reference, size, finish and all other pertinent data. Submittal distribution will be by electronic submittal as coordinated during the Preconstruction Conference.

3.02 CONTRACTOR RESPONSIBILITIES

The Contractor shall submit to the City and Engineer for review and acceptance: working drawings, shop drawings, test reports and data on materials and equipment, and material samples (hereinafter in this section called samples) as are required for the proper control of work, including, but not limited to those working drawings, shop drawings, data and samples for materials and equipment specified elsewhere in the Specifications and in the Contract Drawings.

Drawings and schedules shall be checked and coordinated with the work of all trades involved before they are submitted for review by the City and the Engineer and shall bear the Contractor's stamp of approval and original signature as evidence of such checking and coordination. Drawings or schedules submitted without this stamp of approval and original signature shall be returned to the Contractor for resubmission.

If drawings show variations from Contract requirements because of standard shop practice or for other reasons, the Contractor shall describe such variations in his letter of transmittal. If acceptable, proper adjustment in the contract shall be implemented where appropriate. If the Contractor fails to describe such variations, he shall not be relieved of the responsibility of executing the work in accordance with the Contract, even though such drawings have been reviewed.

For all mechanical and electrical equipment furnished, the Contractor shall provide a list including the equipment name and address and telephone number of the manufacturer's representative and service company so that service and/or spare parts can be readily obtained.

All manufacturers or equipment suppliers who proposed to furnish equipment or products shall submit an installation list to the City along with the required shop drawings. The installation list shall include at least five installations where identical equipment has been installed and have been in operation for a period of at least one (1) year.
No materials or equipment shall be ordered, fabricated or shipped or any work performed until the Engineer reviews and returns to the Contractor the submittals as acceptable according to the

submittal review codes in Section 3.04.

3.03 SUBMITTAL NUMBERING

When submitting shop drawings or samples, utilize a unique numbering system of the Contractors choice. Subsequent resubmittals of a revised submittal shall be denoted with a letter, A-Z, indicating the resubmission of the same drawing (i.e. A=2nd submission, B=3rd submission, C=4th submission, etc.).
An example of a submittal numbering would be as follows: Submittal No. 5A - HDPE Pipe 6.03

1. 5A is the second submission of the 5th shop drawing submitted for the project
2. HDPE Pipe is the subject of the submittal
3. 6.05 is the Specification Section for HDPE Pressure Pipe

3.04 SUBMITTAL REVIEW

Submittals shall be transmitted in sufficient time to allow the Engineer at least twenty (20) working days for review and processing. The review of shop drawings, data and samples will be for general conformance with the design concept and Contract Documents. An acceptance of a submittal shall be interpreted to mean that the Engineer has no specific objections to the submitted material, subject to conformance with the Contract Drawings and Specifications. This is not to be construed as permitting any departure from the Contract requirements, relieving the Contractor of responsibility for any errors, including details, dimensions, and materials, or approving departures from details furnished by the City, except as otherwise provided herein.

Submittals will be returned to the Contractor under one (1) of the following codes:

A. "NO EXCEPTIONS TAKEN" is assigned when there are no notations or comments on the submittal. When returned under this code the Contractor may release the equipment and/or material for manufacture.
B. "CORRECTIONS NOTED". This code is assigned when a confirmation of the notations and comments IS NOT required by the Contractor. The Contractor may release the equipment or material for manufacture; however, all notations and comments must be incorporated into the final product.
C. "REVISE AND RESUBMIT". This code is assigned when notations and comments are extensive enough to require a resubmittal of the package. The Contractor may release the equipment or material for manufacture; however, all notations and comments must be incorporated into the final product. This resubmittal is to address all comments, omissions and non-conforming items that were noted. Resubmittal is to be received by the Engineer within 15 Calendar Days of the date of the Engineer's transmittal requiring the resubmittal.
D. “REJECTED" is assigned when the submittal does not meet the intent of the Contract Documents. The Contractor must resubmit the entire package revised to bring the submittal into conformance. It may be necessary to resubmit using a different manufacturer/vendor to meet the Contract Documents.
E. “Filed as Received” is assigned when the submittal is for informational purposes only. No review or comments will be provided by the Engineer.

END OF SECTION

SECTION 4 – AS-BUILT DRAWINGS

4.01 MINIMUM AS-BUILT DRAWING STANDARDS FOR ALL AS-BUILT DRAWINGS

For all elements of construction, As-Built Drawings shall be submitted to at least the level of detail in the contract documents. It is anticipated that the original contract documents shall serve as at least a background for all record information. Original drawings in CAD format may be requested by the City.

Project data points shall contain both horizontal and vertical data relative to the FL Florida State Plane, West Zone, US Foot. Vertical datum is NAVD 1983. All elevations shall be in feet and inches, referenced to NAVD 1988. Each sheet of the As-Built Drawings shall have the title "AS-BUILT DRAWING" printed in large bold lettering near the title block and a date corresponding to the date the as-built drawing was issued. As-Built Drawings notes, and information shall be bold or italics to identify them as As-Built information.

4.02 AS-BUILT DRAWINGS PREPARATION

The As-Built Drawings shall show the name, address, and phone number of the Contractor. Each drawing shall be certified by a responsible representative of the Contractor and dated. As-built information shall be recorded currently with construction progress and work shall not be concealed until required information is recorded. Properly prepared As-Built Drawings shall be certified by a Professional Engineer or Surveyor registered to the state of Florida, employed by the Contractor.

The As-Built Drawings shall at a minimum legibly include the following:

A. All underground piping with elevations and dimensions. Changes to piping location. Horizontal and vertical locations of underground utilities and appurtenances referenced to permanent surface improvements. Actual installed pipe material, size, class, etc.

B. Locations of drainage ditches, swales, water lines and force mains shall be shown every 200 feet (measured along the centerline). Dimensions at these locations shall indicate distance from centerline of right-of-way to the facility.

C. All horizontal locations, if not in the right-of-way, must relate to easement.

D. Field changes of dimension and detail.

E. Changes made by Field Order or by Change Order.

F. Details not on original Contract Drawings.

G. Equipment and piping relocations.

H. Locations of all valves, air release valves, fire hydrants, manholes, water and sewer services, water and force main fittings, underdrain cleanouts, catch basins, junction boxes and any other structures located in the right-of-way or easement, shall be located by

elevation and by station and offset based on intersection P.I.'s and centerline of right-of-way. For facilities located on private roads, the dimensioning shall be from centerline of paving or another readily visible baseline.

I. Elevations shall be provided for all manhole rim and inverts; junction box rim and inverts; catch basin rim and inverts; and baffle, weir and invert elevations in control structures. Elevations shall also be provided at the PVI's and at every other lot line or 200 feet, whichever is less, of drainage swales and ditches. Benchmarks and elevation datum shall be indicated.

J. Slopes for pipes and ditches shall be recalculated, based on actual field measured distances, elevations, pipe sizes, and type shown. Cross section of drainage ditches and swales shall be verified.

K. Centerline of roads shall be tied to right-of-way lines. Elevation of roadway centerline shall be given at PVI's and at all intersections.

L. As-Built Drawings shall show bearings and distances for all right-of-way and easement lines, and property corners.

M. Sidewalks, fences, and walls, if installed at the time of initial as-built drawing submittal, shall be located every 200 feet or alternate lot lines, whichever is closer. Dimensions shall include distance from the right-of-way line and the back of curb and lot line or easement line.

N. Allowable tolerance shall be ± 6.0 inches for horizontal dimensions. Vertical dimensions such as the difference in elevations between manhole inverts shall have an allowable tolerance of ± 1/8 inch per 50 feet (or part thereof) of horizontal distance up to a maximum tolerance of ± 2 inch.

Specifications and Addenda shall be legibly marked to record manufacturer, trade name, catalog number and supplier of each product and item of equipment actually installed and changes made by Field Order or by Change Order.

4.02.01 REQUIREMENTS FOR RECLAIMED WATER MAINS AND FORCE MAINS

In addition to that specified above, the following information shall be provided on the As-Built Drawings.

A. Location (vertical and any horizontal) at intervals not to exceed two hundred (200) feet and at all locations where the direction changes by more than ten (10) degrees.

B. Pipe size, material, and dimension ratio.

C. Location of air release valve.

D. Detailed location of valves (horizonal).

E. Elevations shall be provided on the top of operating nuts for all water and force main valves.

F. Reclaimed water service connection location based on distance from main line and property line for each designed meter.

G. Horizontal Directional Drilling (HDD) locations and elevations shall be shown on the As-Built Drawings. The beginning, ending, and surface locations shall be indicated as well as the horizontal and vertical location at least every 25 linear feet along the pipe as provided in the HDD Contractor's certified report and bore log.

All top of pipe elevations shall be accompanied by a finished grade elevation at the same location. Horizontal location of the pipe shall be defined using ties to back of curb and nearest property corner, property line or permanent control point.

4.02.02 REQUIREMENTS FOR GRAVITY SEWER

In addition to that specified above, the following information shall be provided on the As-Built Drawings.

A. Manhole rim and invert elevations (include pipe inverts).

B. Manhole horizontal location (i.e. dimension from right-of-way line or permanent control point.)

C. Service laterals located from the nearest downstream manhole. These dimensions shall be provided by on-site inspections or televising of the sewer following installation.

D. Distance between manholes.

Size and material of all pipe.

4.02.03 REQUIREMENTS FOR WASTEWATER PUMP/LIFT STATIONS

In addition to that specified above, the following information shall be provided on the As-Built Drawings.

A. Location ties back to back of curb and nearest property corner or permanent control point.

B. Wet well invert elevations.

C. Pipe invert elevations.

D. Valve vault inverts.

E. Top of slab elevations.

F. Pump make and model, horsepower, impellor size, design point.

G. Operating set point elevations

4.03 AS-BUILT DRAWINGS SUBMITTAL

Prior to substantial completion and prior to starting the bacteria testing of water lines, Contractor shall deliver electronic As-Built Documents and As-Built Drawings to the City and the Engineer for review. If there are any required changes or additions, these shall be completed and resubmitted for review. Signed and sealed As-Built Documents and As-Built Drawings shall be submitted prior to final pay application to the City and the Engineer, both electronically and in hard copy paper format. Up to six (6) copies shall be provided at the City's request.

The Contractor shall employ a Professional Engineer or Surveyor registered in the State of Florida to verify survey data and properly prepare As-Built Drawings. As-Built Drawings shall be certified by the professional(s) (Engineer or Surveyor licensed in Florida), as stipulated by the Land Development Ordinance and submitted in electronic format and up to six (6) hardcopies signed and sealed by a Florida registered surveyor and mapper.

AutoCAD drawings shall be in DWG or DXF form. All fonts, line types, shape files, external references, or other pertinent information used in the drawing and not normally included in AutoCAD shall be included on the media with a text file or attached noted as to its relevance and use.

Accompany submittal with transmittal letter, containing:

A. Date.
B. Project title.
C. Contractor's name and address.
D. Title and number of each As-Built Document.
E. Signature of Contractor or his authorized representative.

Note: The data required to properly prepare these As-Built Drawings shall be obtained at the site, at no cost to the City by the responsible design professional or his/her duly appointed representative. The appointed representative shall be a qualified employee of the responsible design professional or a qualified inspector retained by the responsible design professional on a project-by-project basis.

END OF SECTION

SECTION 5 - CONCRETE, MASONRY, AND REINFORCING STEEL

5.01 GENERAL

The Work in this section includes furnishing, placing, finishing, and curing all reinforced and plain concrete, prestressed concrete, reinforcing steel, welded wire fabric, brick, masonry block, mortar, and related work. Brick used for paving and hexagon block used for sidewalks are not included in this section.

5.02 PORTLAND CEMENT CONCRETE

Portland cement concrete shall conform to the applicable requirements of the FDOT-SSRBC Sections 346, 347, and 921.

Class IV concrete shall be used for all concrete in contact with, or over, salt or brackish water.

Concrete used for structures in contact with sewage shall be mixed from Type II Portland cement containing the lowest calcium thiosulfate available as specified in AASHTO M 85.

Concrete shall meet the following minimum 28-day compressive strength:

Miscellaneous concrete (thrust blocks, pipe encasement, etc.)	2,500 psi
Concrete curb/gutter/sidewalk/pavement	3,000 psi
Cast-in-place/precast structures	4,000 psi
Prestressed structures	5,000 psi

5.03 REINFORCING STEEL

Reinforcing steel shall conform to ASTM A 615, Grade 60 deformed bars and to the applicable requirements of FDOT-SSRBC Sections 415 and 931.

Reinforcing steel shall not be coated, except as specifically specified on the Contract Drawings.

All welded wire fabric shall conform to ASTM A 497 (deformed) or ASTM A 185 (plain) and to the applicable requirements of FDOT-SSRBC Article 415-6.

5.04 FIBROUS CONCRETE REINFORCEMENT

Fibrous concrete reinforcement may be used, where shown or approved, in lieu of welded wire fabric for shrinkage and thermal contraction/expansion in concrete pavement, driveway, and sidewalk.

Fibrous concrete reinforcement shall conform to ASTM C 1116, ASTM C 94, and ASTM E 119-83.

Fibrous concrete reinforcement shall be 100 percent virgin polypropylene fibrillated material mixed with concrete at a minimum of 1.5 pounds per cubic yard of concrete.

5.05 PLACEMENT OF REINFORCEMENT

Reinforcing steel placement shall conform to the applicable requirements of FDOT-SSRBC Articles 350-7 and 415-5.

The following minimum concrete cover shall be provided for all reinforcement:

Concrete cast against and permanently exposed to earth	3-inch
Concrete exposed to earth or weather	
Primary reinforcement	2-inch
Stirrups, ties, and spirals	1 1/2-inch
Concrete deck slabs, top and bottom	2-inch
Concrete not exposed to earth or weather	
Primary reinforcement	1 1/2-inch
Stirrups, ties, and spirals	1-inch

For bundled bars, the minimum concrete cover shall be equal to the equivalent diameter of the bundle, but need not be greater than 2-inch, except against and permanently exposed to earth, in which case the minimum cover shall be 3-inch.

Minimum concrete cover shall be increased in corrosive environment areas.

5.06 PLACEMENT OF CONCRETE

Placement of Portland cement concrete shall conform to the applicable requirements of FDOT-SSRBC Article 400-7.

Unless specific permission is granted prior to each occurrence, no concrete shall be delivered to the job site before 7:30 a.m. or after 4:30 p.m. No concrete shall be placed until the reinforcing steel placement has been inspected and approved by the Engineer.

5.07 CURING OF CONCRETE

Curing of Portland cement concrete shall conform to the applicable requirements of FDOT-SSRBC Article 520-8.

5.08 FINISHING OF CONCRETE

Finishing of Portland cement concrete shall conform to the applicable requirements of FDOT-SSRBC Article 400-15.

5.09 CONCRETE BRICK

Concrete brick for use in drainage structures and where shown on the Contract Drawings shall be approximately 3 5/8-inch by 7 5/8-inch by 2 1/4-inch in size and shall conform to ASTM C 55, Grade N-II or S-II.

5.10 CLAY BRICK

Brick shall be sound, hard, and uniformly burned regular and uniform in shape and size or compact texture and conforming to ASTM C 32, "Specification for Sewer and Manhole Brick (Made from Clay or Shale) Grade MS or MM."

5.11 MASONRY BLOCK

Load bearing units shall be hollow or solid, as shown on the Contract Drawings, and shall conform to ASTM C 90, Type I, 8-inch by 16-inch or 4-inch by 16-inch nominal face dimension.

Non-load bearing units shall conform to ASTM C 129, Type I, 8-inch by 16-inch or 4-inch by 16-inch nominal face dimension.

Horizontal continuous joint reinforcement shall be provided at every other joint. Reinforcement shall be a minimum of #9 gage steel, Grade 50. Wire shall be hot-dip galvanized, conforming to ASTM A 153, Class B-2 (1.5 ounce per square foot of wire surface) for zinc coating after prefabrication into units. Mortar coverage shall be not less than 5/8-inch on joint faces exposed to exterior, and not less than 1/2-inch elsewhere.

5.12 MORTAR

Mortar shall consist of a mixture of cementitious materials, aggregate, and water. All proportions shall be by volume and/or weight. Masonry cement shall conform to ASTM C 91 and C 270. Fine aggregate and Portland cement shall conform to the applicable requirements of FDOT-SSRBC Sections 902 and 921 respectively. Mortar shall have a minimum compressive strength of 1,500 psi.

5.13 GROUT

Grout shall be identical to mortar in all respects.

END OF SECTION

THIS PAGE INTENTIONALLY LEFT BLANK

SECTION 5A – ALUMINUM GRATING AND STAIRS

5A.01 GENERAL

5A.01.01 Work Included

The work under this section includes fabrication and erection of various aluminum items including aluminum frames, bracing, stairs, gratings and supports.

5A.01.02 Quality Assurance

A. Standards: Unless otherwise specified, all materials, workmanship and practices shall conform to the following Standards:

   a. Florida Building Code, Current Edition

   b. Aluminum Design Manual, Current Edition, by the Aluminum Association.

B. Qualifications: Fabrication and erection shall be by a qualified fabricator and erector approved by the Engineer. Preparation of shop drawings shall not begin until the fabricator and erector have been approved.

5A.01.03 Regulatory Requirements

A. Aluminum fabrication materials shall meet the requirements of the following ASTM Standards and Specifications, unless otherwise specified:

   a. Aluminum (Extruded Shapes), 6061-T6 (Alum. alloy)

   b. Aluminum (Extruded Pipe), 6061-T6 (Alum. alloy)

   c. Aluminum Bar Structural, 6061-T6 (Alum. alloy)

   d. Aluminum Grating, 6063-T6 (Alum. alloy)

   e. Stainless Steel Bolts, Fasteners AISI, Type 316

   f. Stainless Steel Plate and Sheet, Wire AISI, Type 316

   g. Welding Rods for Aluminum, AWS D1.2 Spec. for Welding (Alum.)

B. Comply with the provisions of the following standards except as otherwise shown or specified.

   a. Aluminum Design Manual, Current Edition, Specification for Aluminum Structures.

   b. ASTM B308 / B308M, Standard Specification for Aluminum-Alloy 6061-T6 Standard Structural Profiles

c. ASTM B221, Standard Specification for Aluminum and Aluminum-Alloy Extruded Bars, Rods, Wire, Profiles, and Tubes

d. ASTM B429, Standard Specification for Aluminum-Alloy Extruded Structural Pipe and Tube

e. AWS code for welding in building construction.

5A.01.04 Submittals

A. Shop Drawings, signed and sealed by a Florida registered Professional Engineer, shall include descriptive information as required to fully describe the aluminum components to be erected. Shop Drawings shall conform to AA recommendations and specifications and shall show all holes, etc., required for other Work. Include complete details showing all members and their connections, anchor bolt layouts, schedules for fabrication procedures, and diagrams showing the sequence of erection. Submittals shall include, but not be limited to the following:

a. Complete Information and Dimensions

b. Sequences of Erection

c. Mill Certificates

d. Connection Calculations - Calculations, signed and sealed by a Florida registered professional engineer, shall include design assumptions, manual calculations, computer printouts, and any other information required to evaluate the connection designs. Fabrication shall not be approved until the submission has been approved. Submittals shall in accordance with the requirements set forth in Section 3.

5A.02 PRODUCTS

5A.02.01 Materials

A. Standard Shapes, Bars & Plates:

a. ASTM B 209 - Alloy 6061-T6

b. ASTM B 308 - Alloy 6061-T6

B. Standard Threaded Fasteners:

a. Nuts, bolts and washers shall be 316 stainless steel.

C. Welding Electrodes: 4043 filter metal.

5A.02.02 ALUMINUM GRATING

A. For 3-foot or less spans: 1-1/2 inch deep serrated I-bars (alloy 6063-T6) spaced at 1-3/16-inch center-to-center shall be capable of supporting at least 681 PSF uniform load with no more than 0.207-inch deflection and at least 1021 pounds per foot of width concentrated load at midspan with no more than 0.166-inch deflection. Grating shall have end plates so that all I-bars are supported on all sides of grating panel.

B. For 4-foot or less spans: 1-1/2 inch deep serrated I-bars (alloy 6063-T6) spaced at 1-3/16-inch center-to-center shall be capable of supporting at least 383 PSF uniform load with no more than 0.369-inch deflection and at least 766 pounds per foot of width concentrated load at midspan with no more than 0.295-inch deflection. Grating shall have end plates so that all I-bars are supported on all sides of grating panel.

C. For 5-foot or less spans: 2 inch deep serrated I-bars (alloy 6063-T6) spaced at 1-3/16-inch center-to-center shall be capable of supporting at least 429 PSF uniform load with no more than 0.436-inch deflection and at least 1339 pounds per foot of width concentrated load at midspan with no more than 0.312-inch deflection. Grating shall have end plates so that all I-bars are supported on all sides of grating panel

D. For 6-foot or less spans: 2-1/2 inch deep serrated I-bars (alloy 6063-T6) spaced at 1-3/16-inch centers shall be capable of supporting at least 460-pound uniform load at a deflection of no more than 0.506-inch and 1379 pounds of concentrated load at midspan with a deflection of no more than 0.405-inch. Grating shall have end plates so that all I-bars are supported on all sides of the grating panel.

E. Gratings shall be fastened at 24-inch centers along each supported edge, with a minimum of four aluminum fasteners with stainless steel hardware per panel in accordance with the manufacturer's recommendations.

F. Aluminum grating shall have a mil finish, acidic detergent cleaned.

G. Band all grating openings.

H. Grating spans in excess of 6 feet are not permitted. When the required spans exceed 6 feet, the Contractor shall provide intermediate aluminum supports subject to the Engineer’s approval.

I. Finishes: Where aluminum is in contact with dissimilar metals or concrete it shall be protected with two coats (8 mils/coat DFT) coal tar epoxy.

J. Where the contact of dissimilar metals may cause electrolysis or where aluminum will contact concrete, mortar or plaster, the contact surface of the metals shall be separated using not less than one coat of Zinc chromate primer and one heavy coat of aluminum pigmented asphalt paint on each surface; or where deemed necessary by the Engineer, not less than one course of asphalt saturated cotton

fabric cemented to both metals with flashing cement, shall be used. Finished works shall be cleaned and excess cement removed.

5A.02.03 ALUMINUM STAIR TREADS

A. Serrated I-bars (alloy 6063-T6) spaced at 1-3/16-inch center to center shall be capable of supporting at least 100 PSF uniform load with no more than 0.25-inch deflection and at least 200 pounds per foot of width concentrated load at midspan with no more than 0.25 inch deflection over a 3 foot span.

B. Treads shall have anti-slip, cast abrasive safety nosings and shall have a mil finish, acidic detergent cleaned.

C. Fasten treads to safely support rated live load capacity in accordance with manufacturer's recommendations.

D. Isolate all aluminum from steel supports with neoprene gasket material.

5A.02.04 MISCELLANEOUS ALUMINUM FABRICATIONS

A. Unless otherwise indicated on the drawings, aluminum sheet metal fabrications shall be welded and 1/4-inch thick, minimum. Fasteners, where required, shall be 316 SS.

B. Miscellaneous aluminum shapes and plates shall be fabricated as shown. Furnish all miscellaneous aluminum shown, but not otherwise detailed. Structural shapes and extruded items shall conform to the detail dimensions on the Drawings within the tolerances published by the American Aluminum Association.

5A.03 EXECUTION

5A.03.01 FABRICATION

A. Fabrication shall be in accordance with the specified standards. Splices not indicated on the drawings will not be permitted.

B. Surface Treatment: Treatment is required where indicated on the drawings.

C. All miscellaneous metal work shall be formed true to detail, with clean, straight, sharply defined profiles and smooth surfaces of uniform color and texture and free from defects impairing strength or durability.

D. Connections and accessories shall be of sufficient strength to safely withstand stresses and strains to which they will be subjected. Steel accessories and connection to steel or cast iron shall be steel, unless otherwise specified. Threaded connections shall be made so that the threads are concealed by fitting.

E. Welded joints shall be rigid and continuously welded or spot welded as specified or shown. The face of welds shall be dressed flush and smooth. Exposed joints shall be close fitting and jointed where least conspicuous.

F. Welding of parts shall be in accordance with the Standard Code of Arc and Gas Welding in Building Construction of the AWS and shall only be done where shown, specified, or permitted by the Owner. All welding shall be done only by welders certified as to their ability to perform welding in accordance with the requirements of the AWS Code. Component parts of built-up members to be welded shall be adequately supported and clamped or held by other adequate means to hold the parts in proper relation for welding.

G. All aluminum finish exposed surfaces shall have manufacturer's standard mill finish.

5A.03.02 ERECTION

A. Erection shall be in accordance with the specified standards and as indicated on the drawings.

B. No painting required, unless otherwise noted.

C. Welding: Welding of aluminum shall be performed by the Gas Metal Arc (MIG) or Gas Tungsten ARC (TIG) process, per AWS Welding handbook. All welding shall be performed by an AWS certified welder.

5A.03.03 PREPARATION

A. Clean and strip primed steel and aluminum items to bare metal where site welding is required.

5A.03.04 INSTALLATION

A. Install all furnished items embedded in concrete or other masonry. Items to be attached to concrete or masonry after such work is completed shall be installed in accordance with the details shown. All dimensions shall be verified at the site before fabrication is started.

B. Where aluminum is embedded in concrete, apply a heavy coat of approved bitumastic troweling mastic in accordance with the manufacturer's instructions prior to installation.

C. Where aluminum contacts masonry, concrete, or grout, coat the contact surface of the aluminum with one coat of zinc chromate primer and a heavy coat of bituminous paint.

D. Where aluminum contacts a dissimilar metal, apply a heavy brush coat of zinc-chromate primer and provide a 1/32-inch neoprene gasket between the aluminum and the dissimilar metal.

E. Install items plumb and level, accurately fitted, free from distortion or defects.

F. Allow for erection loads, and for sufficient temporary bracing to maintain true alignment until completion of erection and installation of permanent attachments.

G. Field weld components indicated on shop drawings.

H. Perform field welding in accordance with AWS D1.2/D1.2M.

I. Obtain Engineer approval prior to site cutting or making adjustments not scheduled.

J. Verify that supports and anchors are correctly positioned.

K. Verify that opening sizes and dimensional variations are acceptable to suit grading, railing, and stair tolerances.

5A.03.05 TOLERANCES

A. Conform to ANSI/NAAMM MBG 531-00 for bar grating.

B. Maximum space between sections: ¼ inch.

C. Maximum variation from top surface plane of sections: ¼ inch.

D. Perform cutting, drilling, flashing and fitting required for installation of metal fabrications. Set the work accurately, provide temporary bracing and anchors in formwork for items to be built into masonry and concrete. Field weld joints, do not shop weld because of size limitations.

END OF SECTION

SECTION 5B – PIPE AND TUBE RAILINGS

5A.01 GENERAL

5A.01.01 Coordination

A. Coordinate installation of anchorages for railings. Furnish setting drawings, templates, and directions for installing anchorages, including sleeves, concrete inserts, anchor bolts, and items with integral anchors, that are to be embedded in concrete or masonry. Deliver such items to Project site in time for installation.

B. Schedule installation so wall attachments are made only to completed walls. Do not support railings temporarily by any means that do not satisfy structural performance requirements.

5A.01.02 Action Submittals

A. Product Data: For the following:

   a. Manufacturer's product lines of mechanically connected railings.

   b. Railing brackets.

   c. Grout, anchoring cement, and paint products.

B. Shop Drawings: Include plans, elevations, sections, details, and attachments to other work.

C. Delegated-Design Submittal: For railings, including analysis data signed and sealed by the qualified professional engineer responsible for their preparation.

5A.01.03 Information Submittals

A. Qualification Data: For testing agency.

B. Welding certificates.

C. Mill Certificates: Signed by manufacturers of stainless-steel products certifying that products furnished comply with requirements.

D. Paint Compatibility Certificates: From manufacturers of topcoats applied over shop primers certifying that shop primers are compatible with topcoats.

E. Product Test Reports: For pipe and tube railings, for tests performed by a qualified testing agency, according to ASTM E894 and ASTM E935.

F. Evaluation Reports: For post-installed anchors, from ICC-ES.

5A.01.04 Quality Assurance

A. Welding Qualifications: Qualify procedures and personnel according to the following:

   a. AWS D1.2/D1.2M, "Structural Welding Code - Aluminum."

5A.01.05 Delivery, Storage, and Handling

A. Protect mechanical finishes on exposed surfaces from damage by applying a strippable, temporary protective covering before shipping.

5A.01.06 Field Conditions

A. Field Measurements: Verify actual locations of walls and other construction contiguous with metal fabrications by field measurements before fabrication.

5A.02 PRODUCTS

5A.02.01 Performance Requirements

A. Delegated Design: Engage a qualified professional engineer, to design railings, including attachment to building construction.

B. Structural Performance: Railings, including attachment to building construction, shall withstand the effects of gravity loads and the following loads and stresses within limits and under conditions indicated:

   a. Handrails and Top Rails of Guards:

      i. Uniform load of 50 lbf/ ft. applied in any direction.

      ii. Concentrated load of 200 lbf applied in any direction.

      iii. Uniform and concentrated loads need not be assumed to act concurrently.

C. Thermal Movements: Allow for thermal movements from ambient and surface temperature changes.

   a. Temperature Change: 120 deg F ambient; 180 deg F, material surfaces.

5A.02.02 Metals, General

A. Metal Surfaces, General: Provide materials with smooth surfaces, without seam marks, roller marks, rolled trade names, stains, discolorations, or blemishes.

B. Brackets, Flanges, and Anchors: Cast or formed metal of same type of material and finish as supported rails unless otherwise indicated.

5A.02.03 Aluminum

A. Posts: 1.90-inch O.D., Schedule 80, Alloy 6063-T6, at 6-feet on center maximum. The railing height shall be as required to meet code, but not less than 42- inches.

B. Rails: 1.90-inch O.D., Schedule 40, Alloy 6063-T6. The number and spacing of ails required shall be as required to meet Code, but not less than 3 for horizontal rails and 2 for inclined rails.

C. Kick Plates: 1/4-inch by 4-inch continuous plate, Alloy 6063-T52. Kick plate supports and shape shall be at sufficient frequency and construction for the installed kick plates to be completely rigid.

D. Base Plates: Alloy 6063-T52.

E. Brackets: Fully welded construction to fasten posts to walkway stringers. Where brackets are attached inside the web of a channel and vertical posts are used, the handrail shall be attached to the posts with adjustable standoffs to allow the railing to be directly over channel flange.

5A.02.04 Fasteners

A. General: Provide the following:

a. Aluminum Railings: Type 316 stainless-steel fasteners.

B. Fasteners for Interconnecting Railing Components:

b. Provide concealed fasteners for interconnecting railing components and for attaching them to other work, unless otherwise indicated.

C. Post-Installed Anchors: Torque-controlled expansion anchors or chemical anchors capable of sustaining, without failure, a load equal to 4 times the load imposed when installed in concrete, as determined by testing according to ASTM E488/E488M, conducted by a qualified independent testing agency.

c. Material for Exterior Locations and Where Stainless Steel Is Indicated: Alloy Group 2 stainless-steel bolts, ASTM F593, and nuts, ASTM F594.

5A.02.05 Miscellaneous Materials

A. Welding Rods and Bare Electrodes: Select according to AWS specifications for metal alloy welded.

a. For aluminum railings, provide type and alloy as recommended by producer of metal to be welded and as required for color match, strength, and compatibility in fabricated items and that which matches the existing railing on site.

B. Nonshrink, Nonmetallic Grout: Factory-packaged, non-staining, noncorrosive, nongaseous grout complying with ASTM C1107/C1107M. Provide grout specifically recommended by manufacturer for interior and exterior applications.

C. Anchoring Cement: Factory-packaged, nonshrink, non-staining, hydraulic-controlled expansion cement formulation for mixing with water at Project site to create pourable anchoring, patching, and grouting compound.

   b. Water-Resistant Product: provide formulation that is resistant to erosion from water exposure without needing protection by a sealer or waterproof coating and that is recommended by manufacturer for exterior use.

5A.02.06 Fabrication

A. General: Fabricate railings to comply with requirements indicated for design, dimensions, member sizes and spacing, details, finish, and anchorage, but not less than that required to support structural loads.

B. Shop-assemble railings to greatest extent possible to minimize field splicing and assembly. Disassemble units only as necessary for shipping and handling limitations. Clearly mark units for reassembly and coordinated installation. Use connections that maintain structural value of joined pieces.

C. Cut, drill, and punch metals cleanly and accurately. Remove burrs and ease edges to a radius of approximately 1/32 inch unless otherwise indicated. Remove sharp or rough areas on exposed surfaces.

D. Form work true to line and level with accurate angles and surfaces.

E. Fabricate connections that are exposed to weather in a manner that excludes water. Provide weep holes where water may accumulate.

F. Cut, reinforce, drill, and tap as indicated to receive finish hardware, screws, and similar items.

G. Connections: Fabricate railings with welded connections unless otherwise indicated.

H. Welded Connections for Aluminum Pipe: Fabricate railings to interconnect members with concealed internal welds that eliminate surface grinding, using manufacturer's standard system of sleeve and socket fittings.

I. Nonwelded Connections: Connect members with concealed mechanical fasteners and fittings. Fabricate members and fittings to produce flush, smooth, rigid, hairline joints.

J. Close exposed ends of railing members with prefabricated end fittings.

K. Provide wall returns at ends of wall-mounted handrails unless otherwise indicated. Close ends of returns unless clearance between end of rail and wall is 1/4 inch or less.

L. Brackets, Flanges, Fittings, and Anchors: Provide wall brackets, flanges, miscellaneous fittings, and anchors to interconnect railing members to other work unless otherwise indicated.

M. Provide inserts and other anchorage devices for connecting railings to concrete or masonry work. Fabricate anchorage devices capable of withstanding loads imposed by railings. Coordinate anchorage devices with supporting structure.

N. Toe Boards: Provide toe boards at railings around openings and at edge of open-sided floors and platforms. Fabricate to dimensions and details indicated.

5A.02.07 Aluminum Finishes

A. Appearance of Finished Work: Variations in appearance of abutting or adjacent pieces are acceptable if they are within one-half of the range of approved Samples. Noticeable variations in the same piece are unacceptable. Variations in appearance of other components are acceptable if they are within the range of approved Samples and are assembled or installed to minimize contrast.

B. Clear Anodized Finish: AAMA 611, AA-M12C22A31.

5A.03 EXECUTION

5A.03.01 Installation, General

A. Fit exposed connections together to form tight, hairline joints.

B. Perform cutting, drilling, and fitting required for installing railings. Set railings accurately in location, alignment, and elevation; measured from established lines and levels and free of rack.

   a. Do not weld, cut, or abrade surfaces of railing components that are coated or finished after fabrication and that are intended for field connection by mechanical or other means without further cutting or fitting.

   b. Set posts plumb within a tolerance of 1/16 inch in 3 feet .

   c. Align rails so variations from level for horizontal members and variations from parallel with rake of steps and ramps for sloping members do not exceed 1/4 inch in 12 feet

C. Control of Corrosion: Prevent galvanic action and other forms of corrosion by insulating metals and other materials from direct contact with incompatible materials.

   a. Coat, with a heavy coat of bituminous paint, concealed surfaces of aluminum that are in contact with grout, concrete, masonry, wood, or dissimilar metals.

D. Adjust railings before anchoring to ensure matching alignment at abutting joints.

E. Fastening to In-Place Construction: Use anchorage devices and fasteners where necessary for securing railings and for properly transferring loads to in-place construction.

5A.03.02 Railing Connections

A. Nonwelded Connections: Use mechanical or adhesive joints for permanently connecting railing components. Seal recessed holes of exposed locking screws using plastic cement filler colored to match finish of railings.

B. Welded Connections: Use fully welded joints for permanently connecting railing components. Comply with requirements for welded connections in "Fabrication" Article whether welding is performed in the shop or in the field.

5A.03.03 Anchoring Posts

A. Use metal sleeves preset and anchored into concrete for installing posts. After posts are inserted into sleeves, fill annular space between post and sleeve with nonshrink, nonmetallic grout mixed and placed to comply with anchoring material manufacturer's written instructions.

B. Form or core-drill holes not less than 5 inches deep and 3/4 inch larger than OD of post for installing posts in concrete. Clean holes of loose material, insert posts, and fill annular space between post and concrete with nonshrink, nonmetallic grout, mixed and placed to comply with anchoring material manufacturer's written instructions.

C. Leave anchorage joint exposed with 1/8-inch buildup, sloped away from post.

D. Anchor posts to metal surfaces with oval flanges, angle type, or floor type as required by conditions, connected to posts and to metal supporting members as follows:

   a. For aluminum pipe railings, attach posts using fittings designed and engineered for this purpose.

E. Install removable railing sections, where indicated, in slip-fit metal sockets cast in concrete.

5A.03.04 Attaching Railings

A. Anchor railing ends at walls with round flanges anchored to wall construction and welded to railing ends or connected to railing ends using nonwelded connections.

B. Anchor railing ends to metal surfaces with flanges bolted to metal surfaces and welded to railing ends.

C. Attach railings to wall with wall brackets. Locate brackets as indicated or, if not indicated, at spacing required to support structural loads.

D. Secure wall brackets and railing end flanges to building construction as follows:

   a. For concrete and solid masonry anchorage, use drilled-in expansion shields and hanger or lag bolts.

5A.03.05 Protection

A. Protect finishes of railings from damage during construction period with temporary protective coverings approved by railing manufacturer. Remove protective coverings at time of Substantial Completion.

END OF SECTION

THIS PAGE INTENTIONALLY LEFT BLANK

SECTION 6 – EXCAVATION AND BACKFILL

6.01 GENERAL

The Work in this section includes furnishing all labor, materials, tools, and equipment for excavation and backfill of roadways, sidewalks, curbs, driveways, pipelines, and structures. The Work also includes removing and disposing of leftover material and furnishing and placing off-site fill.

Bidders shall examine the site of the Work, make their own additional soil borings and tests, and make their own determination of the character of materials and the conditions to be encountered on the Work; their Bid shall be based upon their own investigation.

6.02 TRENCH SAFETY

The Contractor shall be responsible for maintaining safety at each excavation. The Contractor shall adhere to the Florida Trench Safety Act (FS 90-96), OSHA trench excavation safety standards (29 CFR, Subpart P, 1926.650), and OSHA trench excavation shielding, sloping, or sheeting requirements. Inspections required by OSHA trench excavation safety standards shall be provided by the Contractor's "competent person," as defined by OSHA 29 CF, Subpart P, 1926. The Contractor's "competent person" shall be identified at the Preconstruction Conference.

The Contractor certifies by submitting the bid and subsequently executing this Contract, that all trench excavation done within his control shall be accomplished in strict adherence with OSHA trench safety standards, the Florida Trench Safety Act, and public safety.

The Contractor also agrees to produce or obtain, prior to award of the subcontracts, identical certification from subcontractors who will perform trench excavation, and to retain such certification for at least 3 years following Final Acceptance.

The Contractor shall consider all available geotechnical information when designing the trench excavation safety system. If sufficient geotechnical information is not available, the Contractor may obtain such to support the requirements set forth above, at no additional cost to the City.

6.03 WORK IN WETLANDS, MANGROVES, AND PRESERVATION AREAS

Strict adherence to all permits is required. Damage to wetlands, periodically wet areas, mangroves, and preservation areas is prohibited. Any such damage by the Contractor shall be duly rectified at no additional cost to the City and as approved by the regulatory agencies.

6.04 CLEARING AND GRUBBING

All clearing and grubbing Work shall conform to all applicable requirements of FDOT-SSRBC Section 110 "Clearing and Grubbing" except as modified herein.

The Contractor shall remove only those trees and bushes necessary to complete the specified Work. Not all the trees and bushes have been located or shown on the Contract Drawings. The

Contractor shall flag those trees and bushes to be removed. All other trees and bushes shall be protected per Specifications.

All roots, stumps, and other debris shall be removed to a depth not less than 12 inches below a bearing surface. The disturbed surface shall be backfilled, graded, and compacted as specified.

No tree or bush shall be removed without the review and acceptance of the Engineer. The Contractor shall obtain all necessary City or County permits for each tree to be removed. Tree removal shall conform to the provisions of the Specifications.

6.05 ROADWAY EXCAVATION

The extent of excavation shall be as shown on the Contract Drawings or otherwise approved by the City and shall include roadway excavation and/or filling and grading, together with the removal of trees, bushes, existing asphalt, concrete, or other material, as required to facilitate construction and restoration as directed by the City.

All excavation Work shall conform to all applicable requirements of FDOT-SSRBC Section 120 “Excavation and Embankment” except as modified herein.

6.06 TRENCH EXCAVATION

Mechanical excavation shall be terminated at least 2 inches above the proposed pipe bed and trench bottom, then shaped and compacted so as to provide uniform bearing on the barrel of the pipe. Particular care shall be taken to recess the bottom of the trench at the bell of the pipe to relieve the bell of all load.

A minimum trench width shall be maintained, allowing room for the jointing and proper compaction of the backfill. If material is encountered that is unsuitable in the opinion of the Engineer, it shall be removed by the Contractor and replaced with acceptable material compacted in place as specified. In the event the Contractor excavates below the elevation required without approval, the Contractor shall backfill with approved materials compacted to obtain a suitable trench bottom, all to the satisfaction of the Engineer and at no additional cost to the City.

The amount of open trench shall be limited so that no more than 100 feet of open trench in advance of the backfilling operation will remain at the end of that working day. All open trench shall be protected by the Contractor with barriers, warning devices, and traffic control devices, which shall be kept in the correct position, properly directed, anchored when required, and clearly visible at all times. The barriers, warning devices, and traffic control devices shall be suitably lighted at all times when vehicular traffic lights are required.

6.07 STRUCTURE EXCAVATION

Excavation shall be of the size and depth required for construction of structures and their foundations. Unsuitable material encountered shall be removed to the depth required to obtain sound foundation material or as ordered by the Engineer. Over-excavated areas shall be filled with approved backfill material compacted as specified, at no additional cost to the City.

Unsuitable existing soil shall be removed and replaced with compacted material, as approved by the Engineer and as specified in the subsection herein headed "Excavation of Unsuitable Material."

6.08 EXCAVATION OF UNSUITABLE MATERIAL

Unsuitable material shall include rock, concrete, and boulders. Unsuitable soft material shall include logs, muck, other soft soils, organic soils, and other soils as specified or as ordered by the Engineer to be unsuitable.

All excavation of unsuitable material shall conform to all applicable requirements of FDOT-SSRBC Section 120 “Excavation and Embankment” except as modified herein.

Unsuitable material encountered below or within the roadway stabilized subgrade, the trench bottom, or a structure bottom, shall be removed by the Contractor to the limits established by the Engineer and disposed of from the Work area at an approved disposal area. Unsuitable material shall be replaced with approved material and compacted as specified.

No additional payment will be made for backfill material obtained from any source and used to replace any unsuitable material except as otherwise specified.

6.09 SHEETING, SHIELDING, AND SLOPING

All excavations shall be properly sheeted, shielded, or sloped to the required slope to furnish safe working conditions, to prevent shifting of material, to prevent damage to structures or other Work, and to avoid delay to the Work, all in accordance with applicable safety and health regulations. The minimum sheeting and shielding for trench excavations shall meet the general trenching requirements of the Florida Trench Safety Act and OSHA standards.

The sheeting and shielding shall be of adequate strength and quantity for the purpose intended. Any sheeting extending below the level of above the top of pipeline shall be cut off as ordered by the Engineer and left in place. In addition, the Engineer may order the Contractor to cut off and leave in place any sheeting, shielding, or other approved support where required to protect construction, property, or existing facilities or utilities.

Damages resulting in the installation or removal of sheet piling shall be rectified by the Contractor at no additional cost to the City.

6.10 DEWATERING

A. All pipeline and appurtenances shall be laid entirely in a dry trench. All foundations and structure walls shall be constructed or installed in a dry excavation.

B. Before commencing any excavation at the site of the Work, the Contractor shall submit to the Engineer for review, the methods, equipment, and arrangement of facilities proposed for dewatering and disposal of water at the site and of all water entering any excavation or other part of the Work from any source whatsoever.

C. Water discharged from dewatering equipment shall be carried into surface drainage facilities except water quality treatment systems and shall not be discharged into sanitary sewer lines. The Contractor shall prevent water from puddling in streets or on private properties. The depositing of dirt in storm drains and ditches and staining of existing facilities shall not be permitted.

D. Adequate standby facilities shall be provided to ensure that the excavation will be kept dry in the event of power failure or mechanical breakdown. Facilities for the removal and disposal of water shall be of sufficient capacity to keep the excavation dry under all circumstances with one-half of the facilities out of service. If well points are used, provision shall be made for removing and resetting individual well points without taking the system of which they are a part out of service.

E. The City reserves the right to require the Contractor to replace noisy equipment in order to keep disturbance to a minimum.

F. The cost of dewatering and disposal of water shall be included in the unit quantity for each appropriate item bid.

G. Refer to the Specifications for requirements concerning encountered groundwater contaminates.

6.11 BORROW MATERIAL

Any borrow excavation Work shall consist of the excavation and satisfactory utilization of material from areas provided by the Contractor when necessary material is not available from the normal excavation or grading operations. This Work shall conform to FDOT-SSRBC Section 120 “Excavation and Embankment” except as modified herein.

If additional fill material is required, it shall be City approved material supplied and compacted by the Contractor. All compaction under roadway, alley, driveway, curb, walk, or other improved surface shall be to a density as specified in the Contract Documents. Unless otherwise directed by the City, all material not required for construction shall be removed from the premises and disposed of by the Contractor.

6.12 BEDDING MATERIAL

A. Where shown, ordered, or required, the Contractor shall place bedding material prior to placing pipelines, structures, or slabs. Bedding material may be either excavated approved native sand, concrete sand, gravel, or reclaimed concrete.

B. Off-site bedding material shall be sand or gravel. Sand bedding material shall be a clean concrete sand of uniform gradation between sieve sizes No. 4 and No. 50. All particles shall pass a 3/8-inch sieve and no particles shall pass a No. 100 sieve.

C. Gravel bedding material shall meet the requirements of ASTM C33 and shall be coarse aggregate, DOT Size No. 67 (3/4-inch to No. 4) or approved equal.

D. Reclaimed concrete bedding material shall be graded to meet the size requirements as specified for gravel bedding.

E. Bedding material, where required, shall be placed in lifts and compacted in a manner to achieve the specified density as specified and/or as shown.

F. If gravel bedding is used, an impermeable groundwater barrier shall be placed at 100-foot intervals in the gravel bedding. The impermeable groundwater barrier shall consist of a 10 mil sheet of polyethylene covering the full cross sectional area of the gravel, embedded 6 inches into the trench sides and bottom, and extending to the top of the gravel. The barrier shall be offset a minimum of 2 feet from any culvert or pipe joint. Ends and splice points shall be lapped a minimum of 12 inches.

6.13 STRUCTURAL SLAB BEDDING

Structural slabs for manhole bases, footings, and similar structures shall be placed on approved compacted bedding material and leveled as specified and/or as shown.

6.14 BACKFILL MATERIAL

Backfill material shall consist of earth, loam, sandy clay, sand, gravel, soft shale, or other materials, free from organic materials, large clods of earth, or stones. Backfill material shall be either soil classification A-1, A-2 or A-3, per AASHTO M-145, and shall be free of organic matter, lumps of clay or marl, muck, compressible materials, and rock exceeding 2.5 inches in diameter. Broken concrete, masonry, rubble or other similar materials shall not be used as backfill.

6.15 BACKFILL COMPACTION

All backfill shall be compacted as specified herein and shall meet the following minimum density as determined by the AASHTO T-180 method for backfill outside the right-of-way and in City streets, and by the AASHTO T-99 method if in County or FDOT right-of-way.

AASHTO T-180 Method C or D will be used for stabilized subgrade and base compaction tests, and Method A or B will be used for backfill testing, or as directed by the Engineer or jurisdiction.

	T-180	T-99
Roadway stabilized subgrade	98%	N/A*
Roadway base	98%	N/A*
Curb base	98%	N/A
Sidewalk and driveway base	98%	N/A
Pipe bedding	98%	100%
Pipe backfill - under pavement	98%	100%
Pipe backfill - under grass	95%	100%
Structure base slabs	100%	N/A
Structure backfill	98%	N/A

*Roadway stabilized subgrade and base material shall meet LBR requirements as specified in the Contract Documents.

6.16 BACKFILLING OF TRENCH

Backfilling shall be accomplished with suitable material and shall commence only after the pipelines have been laid and tentatively accepted by the City. The space between the pipe and the sides of the trench shall be packed full by hand-shoveled earth free from lumps or debris.

The backfill material shall be placed in 6-inch lifts and compacted, using approved tampers to the required compaction, to a point 12 inches over the top of the pipe. The remaining backfill (under areas other than roadways) shall be placed in uniform lifts not greater than 12 inches thick (or less as approved for mechanical equipment available) and tamped to the required compaction. Backfill under roadways shall be compacted in 6-inch lifts.

Where trenches are improperly backfilled, or where settlement occurs, the trenches shall be reopened to the depth required for proper compaction, refilled and compacted, and the surface restored to the grade and compaction, mounded over and smoothed off.

6.17 BACKFILLING STRUCTURES

Backfill around structures shall be of suitable job-excavated material, suitable off-site fill material, or other material approved by the Engineer. Such backfill shall extend from the bottom of the excavation or top of bedding to the bottom of pavement base course, the bottom of the subgrade for lawns or lawn replacement, the top of the existing ground surface, or to such other grades as may be shown or required.

The backfill shall be placed in uniform lifts not greater than 12 inches thick, and thoroughly compacted in place.

6.18 BACKFILLING UNDER ROADWAYS

Backfill placed under roadways and other paved surfaces shall be compacted in 6-inch lifts and thoroughly compacted in place, with suitable equipment as specified herein.

6.19 DISPOSING OF LEFTOVER MATERIAL

The Contractor shall bring the surface to the same level as existed prior to the excavation. All leftover material shall be hauled from the site and disposed of by the Contractor. Leftover material shall not be stored in or along rights-of-way or easements.

6.20 ADJACENT FACILITIES

The Contractor shall be responsible for the protection, removal, and replacement of all adjacent structures, utilities, trees, shrubbery, curbs, culverts, headwalls, fences, signs, and other miscellaneous structures encountered during the course of the Work.

6.21 TEMPORARY SUPPORTS

Temporary supports for 16-inch and larger pressure and gravity pipes shall be designed by the Contractor and submitted to the City as required by Specifications. Temporary supports that include a structural beam, or other such member(s), shall be designed, signed and sealed by a Professional Engineer.

6.22 FLOWABLE FILL

Where shown on the Contract Drawings, or where ordered by the Engineer, the Contractor shall backfill a void area or an excavation with flowable fill. Flowable fill may be shown, or ordered, to fill abandoned pipes, abandoned underground steel storage tanks, trench backfill, washout area under structural slabs or behind walls, or other similar locations.

Flowable fill shall be produced and delivered to the site. Placing of flowable fill shall be by chute, pumping, or other approved methods. Flowable fill shall be placed to the designated fill line without vibration. The Contractor shall take all necessary precautions to prevent any damage caused by hydraulic pressure of the fill during placement prior to hardening. Flowable fill shall not be used for pipe bedding and backfill in the zone from the bottom of a pipe to 12 inches above the top of pipe.

Flowable fill shall consist of materials conforming to FDOT-SSRBC Sections as follows:

Cement (Type I or II)	Section 921	“Portland Cement and Blended Cement”
Fly ash (Type F)	Section 929	“Supplementary Cementitious Materials”
Fine aggregate (sand)	Section 902	“Fine Aggregate”
Water	Section 923	“Water for Concrete”

The Contractor shall submit a proposed design mix that will produce a flowable fill meeting the strength requirements specified herein, using the following materials:

	Pounds per cubic yard
Cement (Type I or II)	50 - 200
Fly ash (Type F)	0 - 2,000
Fine aggregate (sand)	2,500 - 3,000
Water	325 - 550
Note: 6-inch to 10-inch slump	

Flowable fill material shall be proportioned to produce a 28-day compressive strength approximately as follows:

	Pounds per square inch
Pipe trench backfill	50 - 150
Fill abandoned pipes or tanks	30 - 150
Under slabs, behind walls	300 - 1000
Note: Density in place 115 to 145 pounds per cubic foot.	

Not more than 60 minutes shall elapse between the start of moist mixing and the placement of the flowable fill.

Flowable fill placed on slopes shall have a reduced slump with a reduction in water and shall be able to be shaped as required.

The Contractor shall place the flowable fill in such a manner as to eliminate all cavities.

Flowable fill shall not be placed in salt water. When within a tidal area, the flowable fill shall be placed immediately after the salt water has receded.

When flowable fill is used adjacent to ductile iron pipe, the pipe shall be polyethylene encased.

END OF SECTION

SECTION 7 - SURFACE RESTORATION

7.01 GENERAL

The Work in this section includes restoring and maintaining pavements and pavement bases, curbing, sidewalks, driveways, and grass surfaces that are disturbed, damaged, or destroyed during the course of the Work under this Contract.

The quality of workmanship and materials used in the restoration shall produce a surface equal to or better than the condition before the Work began.

Prior to restoration, the Contractor shall saw cut and remove all existing pavement within 2 feet of the edge of the excavation, or within such widths as may be ordered by the Engineer.

Compaction of soil and base materials shall be tested using the AASHTO T 180 method.

Surface restoration workmanship and materials shall conform to the applicable sections of the FDOT-SSRBC.

All dirt areas disturbed shall be restored with sod, unless otherwise specified.

7.02 ROADWAY RESTORATION

Where the installation of pipe or structures occurs within an existing roadway, the limits of excavation shall be saw cut leaving a straight and square edge. The upper portion of the trench backfill shall be replaced with a compacted shell, crushed (reclaimed) concrete, or limerock base as shown on the Contract Drawings, and paved to match the surrounding surface. Replacement base material shall be the same as the existing base. Roadway restoration shall conform to the detail for shown in the Contract Drawings.

7.03 TEMPORARY PAVEMENT

Immediately upon completion of backfilling, the pavement surfaces damaged or destroyed shall be temporarily restored by placing a shell (FDOT-SSRBC Section 911), crushed (reclaimed) concrete (FDOT-SSRBC Section 204 applicable sections), or limerock (FDOT-SSRBC Section 911) base on the backfilled, compacted subgrade, and an adequate temporary asphaltic patch as shown or as approved by the Engineer. Shell crushed (reclaimed) concrete, or limerock shall be used as a base for all bituminous pavements.

Temporary work shall be maintained in a suitable and safe condition for traffic until the permanent pavement is laid or until final acceptance of the Work.

7.04 SHELL BASE

Shell base shall be constructed on the prepared subgrade to not less than 98 percent of maximum density, in accordance with the requirements of FDOT-SSRBC Section 200. The minimum compacted thickness of shell base shall conform to the detail shown on the Contract Drawings.

7.05 LIMEROCK BASE

Limerock base shall be constructed on the prepared subgrade to not less than 98 percent of maximum density, in accordance with the requirements of FDOT-SSRBC Section 911. The minimum compacted thickness of limerock base shall conform to the detail shown on the Contract Drawings.

7.06 CRUSHED (RECLAIMED) CONCRETE BASE

Crushed (reclaimed) concrete base shall be constructed on the prepared subgrade to not less than 98 percent of maximum density, in accordance with the requirements of FDOT-SSRBC Section 204. The minimum compacted thickness of crushed (reclaimed) concrete base shall conform to detail shown on the Contract Drawings.

The minimum limerock bearing ratio (LBR) value shall be 150.

7.07 ASPHALTIC CONCRETE PAVEMENT

A prime coat shall be applied to the prepared base in accordance with FDOT-SSRBC Section 300 prior to permanent asphaltic concrete pavement.

Unless specified elsewhere, all permanent asphaltic concrete pavement replacement shall be constructed in accordance with the requirements of FDOT-SSRBC Sections 320, 330, 334, and 337. Surface types and compacted thickness shall conform to the detail shown on the Contract Drawings.

7.08 BRICK PAVEMENT

Construction of brick pavement shall follow the details as shown on the Contract Drawings and City standard practice using City standard paving brick or red clay brick conforming to ASTM C 32, Grade SS with City standard dimensions.

Brick street abutting asphalt pavement shall have a minimum 6-inch-wide flush Type A Header Curb.

7.09 CURB AND GUTTER

All permanent restoration of street curb, or curb and gutter, shall be of the same type and thickness as the curb, or curb and gutter, which abuts. The grade of the restored curb, or curb and gutter, shall conform to the grade of the existing adjacent curb, or curb and gutter, so that positive drainage is maintained.

7.10 CONCRETE SIDEWALK

The restoration and construction of concrete sidewalks shall conform to applicable requirements of FDOT-SSRBC Section 522 and the Contract Drawings and shall be constructed where shown on the Contract Drawings and directed by the City. Sidewalk expansion joints with bituminous filler shall be installed at a maximum of 50-foot intervals on center and struck joints shall be spaced equidistant with walk width (joints wider than 6 feet shall be spaced as directed by the City). Where new construction is to be tied into existing facilities, the old material is to be removed back to the nearest construction joint, or sawcut to a straight line as directed by the City or Engineer. The soil under sidewalks and driveways shall be compacted to 98 percent of the maximum density.

New sidewalks shall be 4 inches thick. Concrete pour for walk construction shall be made only on dampened subgrade. A soft broom finish shall be given the walk surface as directed by the Engineer.

Sidewalks crossing driveways shall be constructed according to the Specifications for concrete driveways.

Curb ramps for physically handicapped shall be constructed at all locations where sidewalks cross the curb or where directed by the Engineer. Those existing sidewalks which are removed to accomplish associated work as a part of this Project shall be replaced with a curb ramp when the sidewalk crosses the curb. The cost of curb ramps shall be included in the appropriate proposal item for sidewalk restoration.

Where sidewalks are replaced, the replacement shall be the full width of the walk and the minimum length shall be 60 inches. Restoration of adjacent lawn is incidental to sidewalk replacement and no separate payment will be made therefore.

7.11 HEXAGON BLOCK SIDEWALK

The restoration and construction of hexagon block sidewalks shall conform to the details shown on the Contract Drawings and City standard practice using City standard hexagon blocks.

The soil under sidewalks and driveways shall be compacted to 98 percent of the maximum density. New hexagon block sidewalks shall be 2 inches thick.

Curb ramps for physically handicapped shall be constructed at all locations where sidewalks cross the curb, or where directed by the City or Engineer. Those existing sidewalks which are removed to accomplish associated work as a part of this Project shall be replaced with a curb ramp when the sidewalk crosses the curb. The cost of curb ramps shall be included in the appropriate Pay Item for sidewalk restoration.

Where sidewalks are replaced, the replacement shall be the full width of the walk. Restoration of adjacent grass is incidental to sidewalk replacement and no separate payment will be made therefore.

7.12 DRIVEWAY AND PARKING LOT

Except as otherwise specified, all permanent restoration of base and surface of driveways, parking aprons, and sidewalks shall match the materials, thicknesses, elevations, lines, and grades of the existing construction, all to the Engineer's satisfaction. Patching of Portland cement driveway areas will not be allowed between joints or dummy joints.

For areas where streets are to be paved, or where more than 50 percent of the driveway apron is disturbed, concrete or brick driveways shall be replaced in kind. All other driveways, including shell and dirt, shall be restored with an asphalt concrete surface from the street to the property line or front of sidewalk, as directed by the City or Engineer.

All base compaction under driveways shall be to a minimum density of 98 percent of the maximum density.

7.13 DRIVEWAY - ASPHALT

Residential asphalt driveway restoration shall include 1-inch thick asphaltic concrete surface over 2 inches of compacted sand-asphalt hot mix base, or 5 inches of compacted limerock or shell base.

Commercial asphalt driveway restoration shall be constructed of 1-inch thick asphaltic concrete surface over 8 inches of limerock base compacted in 2 lifts.

7.14 DRIVEWAY - CONCRETE

The restoration and construction of concrete driveways shall conform to applicable requirements of FDOT-SSRBC Section 522 and the Contract Drawings and shall be constructed where shown on the Contract Drawings and directed by the City or Engineer.

Residential concrete driveway restoration shall be 5 inches thick and shall include placing a single layer of 6-inch by 6-inch wire mesh (WWF 6 x 6 - W1.4 x W1.4).

Commercial concrete driveways shall be 6 inches thick with a double layer of 6-inch by 6-inch wire mesh (WWF 6 x 6 - W1.4 x W1.4).

7.15 DRIVEWAY - PEAGRAVEL

Where less than 50 percent of the driveway apron is disturbed, pea gravel driveways shall be restored to match the existing driveway. Pea gravel driveway restoration shall include asphalt treated shell base 5 inches thick after compaction to a minimum density of 98 percent of the maximum.

7.16 DRIVEWAY - SHELL

Where less than 50 percent of the driveway apron is disturbed, shell driveways shall be restored to match the existing driveway. Shell driveway restoration shall be 5 inches thick after compaction to a minimum density of 98 percent.

7.17 GRASS

7.17.01 Sodding

Sod shall be planted as soon as practical after paving, pipeline, or other work has been completed. Sodding shall always be used over seeding.

All work and materials shall meet the applicable requirements FDOT-SSRBC Section 570 (Sodding).

Sodding shall be done as directed by the Engineer, using only material which, in the opinion of the Engineer, is healthy and free of weeds, and (unless specified otherwise by the Engineer) of the same variety predominating at time of removal. Sod may be St. Augustine, Bahia, or other varieties as selected by the Engineer.

Sod shall be planted within 72 hours of being cut. Only moist, green sod having a virile root system may be planted. Sod shall be cut into adjacent sod to provide a smooth surface, and "top dressed" where necessary. Sod shall be rolled or tamped after planting to provide a uniform and consistent grade.

7.17.02 Grass Maintenance

The Contractor shall properly water and otherwise maintain all seeded and sodded areas for a minimum of 60 consecutive calendar days after completion of sodding operations. After the 60 days, and upon receipt of written request from the Contractor, the Engineer will inspect the areas for acceptance by the City. Any area that is washed or eroded, fails to show a uniform stand of healthy, vigorous grassing, or does not appear to be otherwise developing satisfactorily, shall be re-sodded and maintained until suitable for acceptance by the Engineer.

In the event that the stand of grass is found to be contaminated by weeds or other undesirable growth, the Contractor will be required to effectively eliminate such undesirable growth at his own expense.

7.18 EXPANSION JOINT MATERIAL

Expansion joint material for concrete pavement surfaces, including sidewalks and driveways, shall be the bituminous strip type, 1/2-inch thick, and shall conform to applicable requirements of FDOT-SSRBC Section 932.

END OF SECTION

THIS PAGE INTENTIONALLY LEFT BLANK

SECTION 8 – PAINTING

8.01 GENERAL

Painting materials for each system shall be manufactured by one manufacturer. Painting materials not obtainable from the prime manufacturer shall be obtained from a second source recommended by the prime manufacturer for compatibility. All products furnished shall meet current Federal Regulations for lead, mercury and other heavy metals, as well as current VOC air quality regulations. Products of the following acceptable manufacturers may be used on this project, except where noted otherwise.

A. Ameron – Corrosion Control Division
B. Devoe & Raynolds Company
C. Indurall
D. KopCoat –RPM
E. MAB Paints
F. PPG Industries, Inc.
G. Rust-Oleum Corporation
H. Sherwin-Williams
I. Tnemec Company, Inc.

The Contractor shall paint or provide a protective coating for all interior and exterior wood and metal surfaces, all interior masonry, valves, and all submerged piping and other metal, whether specifically called for or not. In addition, all exposed piping shall be painted and further identified in accordance with other sections of these specifications. Because of their very nature, some areas or items do not require specific painting or coating for protection or appearance. The following generally do not require painting or coating unless specifically noted otherwise or required by manufacture, color coding, insulation from dissimilar metals, insulation from concrete or cement products, or architectural considerations:

A. Non-Ferrous Alloys:

Aluminum
Monel
Stainless Steel

B. Corrosion Resistant Metals:

Chromium Plated Steel
Weathering Steel
Galvanized Steel

C. Non-Metallic Materials:

Exterior Brick

	Concrete
	Glass
	Plastic &FRP
	PVC
	Porcelain
Pre-Finished Manufactured Items:	Cabinets
	Louvers
	Motor Control Centers
	Panels
	Signs and Nameplates
	Switchgear
	Switchboards
	Transformers
	Tile

D. Electrical Conduits Attached to Unpainted Surfaces.

E. Insulation and Insulation Jackets.

All exposed piping and conduit within the fence enclosure shall be color-coded in accordance with the following Color Coding Schedule:

A.	Electric	Gray
B.	Gas, Oil, Dangerous Materials	Red
C.	Telephone, Telegraph, Television, Communications	Safety Alert Orange
D.	Potable Water	Safety Blue
E.	Treated Sewage	Safety Green

Other paint colors will be selected by the Engineer

All materials shall be pure and first quality. Materials listed shall be the standard for each such type of material. Primers and finish coats shall be compatible and of the same manufacture where possible. Emulsion and alkyd paints shall contain a mildewcide, and both the paint and mildewcide shall conform to OSHA and Federal requirements, including Fed. Spec. TT-P-19.

8.02 PAINTING SCHEDULES AND SYSTEMS

Painting and coating of surfaces shall conform to the following schedules and systems, unless otherwise specified or shown on the drawings:

A. Schedule A: System 1 – Exposed exterior structural and miscellaneous steel, piping, equipment to include all stainless steel and carbon steel electrical control cabinets non-submerged, not exposed to corrosion, splash, fumes or immersion conditions.

1. Prime: One sprayed coat of a combination of a two-part epoxy primer, gray, of 3.0 mils, minimum dry film thickness as by Devoe Paints, Tru-Glaze Epoxy Primer Nos. 12735 and 12702 (ratio 19:1) or equal. If shop coat is damaged, re-prime bare areas in the field. The exterior of electrical cabinets, in stainless steel, shall be sand-blasted and spray-primed per the paint manufacturer's instructions.

2. Finish: Two coats of "hanging moss green" (Devoe Paints FX-70), Semi-Gloss Advanced Technology Acrylic Resin of 1.5 to 2.0 mils, dry thickness as Exterior Waterborne Semi-Gloss Enamel #83XX by Devoe Paints, or equal. Coats to be applied by spray painting in the shop.

B. Schedule B: System 2 – Piping and pumping equipment – submerged or non-submerged, exposed to spray, splash or corrosive atmosphere, excluding chains and sprockets, and stainless steel bracing in the wetwell:

1. Prime: One coat chemical resistant red iron oxide, based on a polyamide cured epoxy resin, minimum of 3.0-5.0 mils dry film thickness as by Devoe Paints, Devron 201. If shop coat is damaged, re-prime bare areas in the field.

2. Finish: Two coats of polyamide cured, epoxy resin coating, minimum of 4.0-6.0 mils dry film thickness per coat as by Devoe Paints, Devron 224HS-color, moss green as required above.

C. Schedule C: System 3 – Non-Potable water exposed concrete surfaces inside valve vaults, meter vaults, and sanitary sewer manholes.

1. Coal Tar Epoxy (Non-Potable Only)

Must be recoated within four days at 75deg F. Higher temperature will shorten recoat time.

Surface Preparation: Brush-Off Blast Cleaning

1st Coat: 46-413 Tneme Tar	8.0 - 10.0 mils
2nd Coat: 46-413 Tneme Tar	8.0 - 10.0 mils

8.03 EXECUTION

All painting shall be done by skilled and experienced craftsmen and shall be of highest quality workmanship. Application of materials shall be done only on properly prepared surfaces as herein specified.

Before commencing work, the painter shall make certain that surfaces to be covered are in good condition. Should the painter find such surfaces not to be totally acceptable for covering, he shall report such fact to the Engineer. The application of paint shall be held as acceptance of the surfaces and working conditions and the painter will be held responsible for the results reasonably expected from the materials and processes specified.
Hardware, hardware accessories, machined surfaces, nameplates giving manufacturer's data, cover plates, grease fittings, lighting fixtures and similar items in contact with painted surfaces and

not to be painted shall be removed, masked, or otherwise protected prior to surface preparation and painting operations so they remain clean and free from paint.

Ferrous metals (not shop primed) shall be sandblasted per SSPC-SP6 to remove mill scale and rust. Ferrous surfaces to be submerged or exposed to spray, splash, fumes or corrosive atmosphere shall be sandblasted to near-white metal blast cleaning according to SSPC-SP 10. Brush blast or clean other metals as appropriate to provide suitable surface. Surface profile as obtained from sandblasting shall be recommended by the coating manufacturer. All metal surfaces shall be completely degreased by solvent cleaning in compliance with SSPC-SP 1.

Galvanized surfaces shall be cleaned of dirt, grease and other foreign substances and solvent cleaned. Surfaces shall be pro-treated with one coat of proprietary acid bound resinous or crystalline zinc phosphate preparation, used in accordance with the manufacturer's directions.

Remove glaze, of florescence, dirt, loose particles and grease (and existing paint, if applicable) from concrete receiving masonry paint. Fill all cracks, cut out defective joints and repaint.

In addition to the above listed surface preparations, all dirt, rust, scale, splinters, loose particles, disintegrated paint grease, oil and other deleterious substances shall be removed from all surfaces that are to be coated.

Work shall be done only under favorable weather conditions and as recommended by paint supplier. Exterior painting shall be done only in dry weather. Any surface coating damaged by moisture or rain shall be removed and redone as directed by the Engineer. Coatings shall be mixed, thinned, tinted and applied in accordance with the manufacturer's recommendations. The Contractor shall tint or match colors as selected by the Owner. A sample shall be applied on the job for review and approval before work is actually done. No thinners shall be used except those specifically mentioned and only in such quantity as directed by the manufacturer's instructions. If thinning is used, sufficient additional coat shall be applied to assure the required dry film thickness is achieved.

The manufacturer's recommended thinner or cleanup solvent shall be used for all cleanup. Application by brush, spray, airless spray or roller shall be as recommend by the manufacturer for optimum performance and appearance. Paint shall be applied in a neat manner with finished surface free of runs, sags, ridges, laps and brush marks.

Each coat shall be applied in a manner that will produce an even film of uniform and proper thickness, and no variation in sheen or color. Where more than one coat of paint is specified, each coat shall be sufficiently tinted to result in a perceptible difference in shades of the various coats of paints so that the application of subsequent coats can be properly and uniformly spread and inspected. Provision shall be made to allow thorough drying between coats as recommended by the manufacturer before the next coat is applied, and paint used in successive field coats shall be produced by the same manufacturer.

Seal coats shall be used over bitumen-coated surfaces as applicable. Plastic pipe shall be painted in accordance with the pipe manufacturer's recommendations. Pipes, shoot metal ducts and other metal items which are to be installed in inaccessible locations shall be painted prior to installation.

Pumps, motors, machinery, equipment, electrical panels and other manufactured items shall have

surfaces prepared, primed and coating in accordance with the recommendations of the manufacturer, and be given at least one touch-up coat with the intermediate coat material and one compete finish cost in the field.

The prime and intermediate coats for the various coating systems shall be as specified earlier and shall be compatible with the field coat or coats. Paint used in the first field coat over shop painted or previously painted surfaces shall cause no wrinkling, lifting or other damage to underlying paint.

All completed surfaces will be checked by the Engineer, and the Contractor shall provide the necessary properly calibrated gages. All non-ferrous surfaces shall be checked for number of coats and thickness by use of a Tooke gage. All ferrous surfaces shall be checked for film thickness by use of Elcometer or Micro-Test magnetic dry film gauge properly calibrated. All defects shall be corrected to the satisfaction of the Engineer.

All paint brushed, splattered, spilled, or splashed on any surface not specified to be painted shall be removed. Upon completion of the painting work, the Owner shall be furnished one (1) gallon of each type and color of finish paint for touching up at no additional cost. Paint container labels, in addition to other required information, shall have location of color and type marked thereon.

Surfaces to be painted shall be inspected before any paint materials are applied, and after preparation has been completed.

Painted surfaces shall be inspected between coats, prior to application of next coat of painting material. Failure to get acceptance between coats will nullify credits for coats previously applied.

All paint shall be delivered to the job site in unopened original containers.

All paint not intended for the job shall be removed from the job site.

END OF SECTION

THIS PAGE INTENTIONALLY LEFT BLANK

SECTION 9 - PIPING MATERIALS: DUCTILE IRON PIPE AND FITTINGS

9.01 GENERAL

The Work in this section includes furnishing all ductile iron pipe, fittings, joints, and appurtenant materials. All castings furnished shall have been cast in the United States of America unless complete certification is furnished in accordance with the latest edition of ANSI/AWWA C 110.

Standards referenced in this section are the latest revision of the following specifications:

ANSI/AWWA C104	"Cement Mortar Lining for Ductile-Iron Pipe and Fittings for Water"
ANSI/AWWA C110	"Ductile-Iron and Gray Iron Fittings, 3-Inch through 48-Inch, for Water and Other Liquids"
ANSI/AWWA C111	"Rubber-Gasket Joints for Ductile-Iron and Pressure Pipe and Fittings"
ANSI/AWWA C115	"Flanged Ductile-Iron Pipe with Threaded Flanges"
ANSI/AWWA C150	"Thickness Design of Ductile-Iron Pipe"
ANSI/AWWA C151	"Ductile-Iron Pipe, Centrifugally Cast, for Water or Other Liquids"
ANSI/AWWA C153	"Ductile-Iron Compact Fittings, 3-Inch through 24-Inch, for Water and Other Liquids"
ASTM D 1248	"Polyethylene Plastics Molding and Extrusion Materials"

9.02 PIPE

9.02.01 GENERAL

All ductile iron pipe shall be designed in accordance with ANSI/AWWA C150. Pipe shall be minimum pressure class as follows:

Size	Pressure Class
3-inch through 18-inch	350
20-inch through 24-inch	300
30-inch through 48-inch	200

For threaded flanged pipe the minimum thickness shall be the nominal thickness as shown on Table 15.1 of ANSI/AWWA C115.

Thickness shall be designed for a flat-bottom trench backfill lightly consolidated to centerline of pipe. Pipe shall be manufactured in accordance with ANSI/AWWA C151.

The pressure rating, metal thickness class, net weight of pipe (without lining) length of pipe, name of manufacturer, "DI" or "DUCTILE," and country where cast, shall be clearly marked on each length of pipe.

The Contractor shall take extreme care when handling pipe and fittings to ensure the interior lining does not get damaged during construction. Lined pipe and fittings must be handled only

from the outside of the pipe and fittings. No forks, chains, straps, hooks, etc. shall be placed inside the pipe and fittings for lifting, positioning, or laying. The pipe shall not be dropped or unloaded by rolling.

Care should be taken not to let the pipe strike sharp objects while swinging or being off loaded. Ductile iron pipe should never be placed on grade by use of hydraulic pressure from an excavator bucket or by banging with heavy hammers.

9.02.02 LINING

A. **Potable Water Lines and Reclaimed Water Lines**: Ductile iron pipe and fittings for use in potable and reclaimed water lines shall be cement mortar lined. Cement lining shall conform to ANSI/AWWA C104, and seal coated with approved bituminous seal coat in accordance with ANSI/AWWA C151. Seal coating shall be UL listed or NSF approved for use in potable water mains.

B. **Sanitary Force Mains and Gravity Sanitary Pipe**: Ductile iron pipe and fittings for sanitary sewer force mains and gravity sewer pipe shall be polyethylene, polyurethane, or epoxy lined.

   Epoxy lining shall be 40 mil minimum thickness (multi-pass process) and shall be Protecto 401 Ceramic Epoxy, as manufactured by the Protecto Division of Vulcan Painters, Inc., or approved equal.

   Polyethylene lining shall be factory furnished with a fusion bonded polyethylene liner of 60 mil minimum thickness conforming to ASTM D1248, such as Polybond Plus as furnished by American Cast Iron Pipe Co. or approved equal.

   Polyurethane lining shall be factory applied conforming to Corropipe, as manufactured by Madison Chemical Industries, Inc., or an approved equal. Material shall be applied in conformance with the manufacturer's recommendation and shall be a 40-mil final dry film thickness.

   For any lining method, to ensure a holiday-free lining, documentation must be provided, prior to shipment, showing each section of lined pipe has passed holiday testing at the time of production per ASTM G62. The lining shall have a minimum three (3) year warranty covering failure of the lining and bond failure between liner and pipe.

C. **Storm Drain Gravity Pipe**: Ductile iron pipe and fittings for storm drain gravity pipe shall be epoxy lined as per sanitary pipe or cement mortar lined as per water pipe, at the Contractor's option.

9.03 FITTINGS

Ductile iron fittings shall conform to ANSI/AWWA C110 or ANSI/AWWA C153.

Fittings shall be suitable for a minimum water pressure plus water hammer as follows:

Size	Type	Pressure Rating
3-inch through 12-inch	DI	350
14-inch through 24-inch	DI	350
30-inch through 48-inch	DI	250

Fittings shall be coated outside with petroleum asphaltic coating, 1 mil minimum thickness.

Fittings shall be lined as specified herein headed "4.02 Pipe."

Anchor couplings equal to McWayne Clow F-1211 for fire hydrant assemblies may be substituted with an anchoring tee equal to Catalog No. A-10180 locked hydrant tee as manufactured by American Ductile Iron Pipe Co. or hydrant tee with rotatable MJ gland as manufactured by U.S. Pipe Co. in place of the MJ tee and anchor coupling as shown, at the Contractor's option.

9.04 JOINTS - BURIED PIPE AND FITTINGS

Joints for ductile iron pipe and fittings shall conform to ANSI/AWWA C111, except as otherwise specified. All pipe and fittings shall be furnished complete with joint accessories necessary for installation conforming to ANSI/AWWA C111. No additional payment will be made for joint accessories, including retainer glands, unless otherwise specified.

The Contractor shall furnish and install all necessary materials, equipment, and appurtenances required to complete the work.

A. **Unrestrained Joints**: Joints for unrestrained pipe shall be push-on joint. Joints for fittings, when installed with unrestrained pipe, shall be mechanical joint with DI retainer glands, as specified herein for restrained joints.

B. **Restrained Joints**: All joints in restrained pipe systems shall be of the same type (pipe and fittings), except valves shall be mechanical joint with DI retainer glands as specified.

1. **12-inch and Smaller**: Joints for restrained pipe and fittings, 12-inch and smaller, shall be one of the following:

a. Push-on restrained joint utilizing a retainer ring, equal to U.S. Pipe TR Flex. It shall be UL listed, FM approved, or shall be certified by an approved laboratory that the restrained joint will not separate at the specified test pressure.

b. Push-on restrained joint using a locking type gasket, equal to Field-Lok, as manufactured by U.S. Pipe and Foundry, Inc. It shall be UL listed, FM approved, or shall be certified by an approved laboratory that the restrained joint will not separate at the specified test pressure.

c. Mechanical joint with DI retainer glands shall be furnished with retainer glands equal to Series 1100 Megalug, as manufactured by EBAA Iron Inc., Stargrip 3000 as manufactured by Star Pipe Products, or DI MJ Gripper Gland as manufactured by

U.S. Pipe and Foundry Co. for use with ductile iron pipe. All retainer glands shall be UL listed, FM approved, or shall be certified for 350 psi pressure rating with a 2:1 safety factor.

2. **Larger than 12-inch**: Joints for restrained pipe and fittings larger than 12-inch shall be as follows:

   a. Restrained pipe joints shall be modified push-on restrained joint, equal to U.S. Pipe TR Flex, and shall be UL listed or FM approved.

   b. Fittings joints shall be equal to U.S. Pipe TR Flex or shall be mechanical joint with DI retainer glands. Retainer glands shall be equal to Series 1100 Megalug or Stargrip 3000 for 16-inch and larger pipe. All retainer glands shall be UL listed, FM approved, or certified for 350 psi pressure rating (for 16-inch) and 250 psi pressure rating (for larger than 16-inch) with a 2:1 safety factor.

   c. Valve joints shall be mechanical joint with DI retainer glands as specified herein for larger than 12-inch fittings joints.

9.05 JOINTS - EXPOSED PIPE AND FITTINGS

Joints for exposed ductile iron pipe and fittings shall be restrained, except as otherwise noted on the Contract Drawings. Joints for exposed pipe in plants and in vaults shall be flanged where noted on the Contract Drawings.

Joints for exposed pipe and fittings 12-inch and smaller shall be modified push-on restrained joint using a retainer ring, or modified push-on joint using a locking type gasket, as specified herein headed "9.04 Joints - Buried Pipe and Fittings."

Joints for exposed pipe and fittings larger than 12-inch shall be modified push-on restrained joint using a retainer ring as specified herein headed "9.04 Joints - Buried Pipe and Fittings."

9.06 DETECTION

Pipe shall have 3-inch detectable metallic tape of the proper color placed directly above the pipe and 12-inch below finished grade or 6-inch detectable tape between 12-inch and 24-inch below finished grade.

Pipe shall also have tracer wire installed along the pipe alignment. The tracer wire to be used shall be a solid, 10-gauge, high strength, copper clad steel wire with a polyethylene jacket of appropriate color manufactured by Copperhead Industries or approved equal.

9.07 ZINC/EPOXY/FLUOROPOLYMER PROTECTIVE COATING

Joints and Pipe exposed to extreme coastal environments including, but not limited to, aerial ocean crossings shall have this system or an approved equal applied as a protective coating.

Surface Preparation: SSPC-SP6/NACE No.3 Commercial Blast Cleaning with a minimum 1.5 mil angular anchor profile.

Tnemec	Coating Thickness
Primer: Series 90-97 Tneme-Zinc	2.5 - 3.5 mils
2nd Coat: Series 66HS Hi-Build Epoxoline	3.0 - 6.0 mils
3rd Coat: Series 700 Hydroflon	2.0 - 3.0 mils

Total Dry Film Thickness: 7.5 - 12.5 mils

Minimum Dry Film Thickness: 9.5 mils

END OF SECTION

THIS PAGE INTENTIONALLY LEFT BLANK

SECTION 10 - PIPING MATERIALS: PVC PRESSURE PIPE

10.01 GENERAL

The Work in this section includes furnishing all Polyvinyl Chloride (PVC) pressure pipe and fittings. PVC pressure pipe includes all PVC pressure pipe 2-inch through 36-inch.

Standards referenced in this Section are the latest revision of the following specifications:

ANSI/AWWA C900-16	"Polyvinyl Chloride (PVC) Pressure Pipe and Fabricated Fittings, 4 In. Through 60 In."
ANSI/AWWA C110	"Ductile-Iron and Gray-Iron Fittings, 3-Inch through 48-Inch for Water"
ANSI/AWWA C111	"Rubber-Gasket Joints for Ductile-Iron Pressure Pipe and Fittings"
ANSI/AWWA C153	"Ductile-Iron and Gray-Iron Fittings, 3-Inch through 48-Inch for Water"
ASTM D 1784	"Standard Specification for Rigid Poly (Vinyl Chloride) (PVC) Compounds and Chlorinated Poly (Vinyl Chloride) (CPVC) Compounds"
ASTM D 1785	"Standard Specification for Poly (Vinyl Chloride) (PVC) Plastic Pipe, Schedules 40, 80, and 120
ASTM D 2241	"Standard Specification for Poly (Vinyl Chloride) (PVC) Pressure-Rated Pipe (SDR Series)"
ASTM D 3139	"Standard Specification for Joints for Plastic Pressure Pipes Using Flexible Elastomeric Seals"

10.02 PIPE

A. **Two-inch Pipes**: All 2-inch PVC pipe shall meet ASTM D 1784 specification for rigid PVC compounds and ASTM D 2241 specification for PVC plastic pipe. PVC pipe shall be suitable for use at maximum hydrostatic working pressure of 160 psi at 73°F. Pipe shall have a standard dimension ratio (SDR) 26 and bear the NSF Seal for potable water pipe.

B. **4-inch Through 36-inch Pipes**: PVC pressure pipe 4-inch through 36-inch shall meet the requirements of ANSI/AWWA C900-16, with outside diameter dimensions of ductile iron pipe. All 4-inch through 36-inch PVC pressure pipe shall be Class 235 and DR18.

C. **UV Resistant PVC Pipe**: All PVC piping exposed to sunlight shall contain titanium dioxide for UV resistance, and shall conform to ASTM D 1784 and ASTM D 1785 (IPS). The Contractor shall submit the manufacturer's certificate of conformance to the City. Pipe shall be marked with manufacturer's identification.

10.03 FITTINGS

A. **Two-inch Pipes**: Gasketed joint standard dimension ratio (SDR) 21 PVC or galvanized steel fittings shall be used with all 2-inch PVC pipe. PVC adapters, Harco as manufactured by the Harrinton Corporation or approved equal, shall be used for jointing to 2-inch gate valves, galvanized fittings, and existing threaded pipe.

B. **Four-inch Through 36-inch Pipes**

1. **Molded PVC Pressure Fittings**: Fittings for 4-inch through 8-inch sanitary sewer pressure pipe shall be molded PVC pressure fittings, unless DI fittings are directed by the Engineer. Molded PVC fittings shall meet the requirements of ANSI/AWWA C900-16 and shall be Harco Class 150 as manufactured by the Harrington Corporation, or approved equal, as directed by the Engineer.

2. **DI Fittings**: Fittings for pipe larger than 8-inch shall be DI, mechanical joint. DI fittings for 4-inch through 36-inch PVC pressure pipe shall conform to ANSI/AWWA C110 or C153 and shall conform to the Technical Specifications section headed "Piping Materials: Ductile Iron Pipe and Fittings."

C. Where flanged fittings are shown, specified, or directed by the Engineer, adapter flanges shall be used on plain end PVC pipe. Adapter flanges shall be suitable for PVC pipe and be equal to Uni-Flange Series 900 as manufactured by Ford/Uni-Flange, Wabash, Indiana.

10.04 JOINTS

Pipe joints shall be plain end, rubber gasket push-on joints, unless otherwise shown. Push-on joints shall meet the requirements of ASTM D 3139.

Joints to DI fittings shall be rubber gasket mechanical joints with retainer glands, unless otherwise shown. All retainer glands shall be UL listed or FM approved. The retainer glands shall be installed in accordance with the manufacturer's recommendations.

Mechanical joints shall meet the requirements of ANSI/AWWA C111.

10.05 DETECTION

Pipe shall have 3-inch detectable metallic tape of the proper color placed directly above the pipe and 12-inch below finished grade or 6-inch detectable tape between 12-inch and 24-inch below finished grade.

Pipe shall also have tracer wire installed along the pipe alignment. The tracer wire to be used shall be a solid, 10-gauge, high strength, copper clad steel wire with a polyethylene jacket of appropriate color manufactured by Copperhead Industries or approved equal.

10.06 MARKINGS AND COLOR CODING

In addition to the standard markings required by ANSI/AWWA C900-16, the letters NSF denoting National Sanitation Foundation approval shall be included in the marking system, on each pipe length and fitting.

PVC pipe shall be manufactured of solid color as specified, or white with continuous colored ink lettering. The applicable color codes, with light color stabilant, are as follows:

Pipe Use	Color Coding
Potable Water	Safety Blue
Sanitary Sewer	Safety Green
Reclaimed Water	Safety Purple

UV resistant PVC pipe shall be solid color as specified above, or white with colored lettering as specified above.

10.07 HARNESSING

Ductile iron fittings with mechanical joints used with PVC pipe that require harnessing, shall be provided with ductile iron retainer glands such as Series 2000 PV Megalug as manufactured by EBAA Iron Inc., Stargrip 4000 as manufactured by Star Pipe Products, or approved equal.

PVC push-on joints for pipe in casings, for joints to PVC pressure fittings, or where shown, shall be harnessed using a ductile iron retainer for push-on joint PVC pipe, such as Series 1600 as manufactured by EBAA Iron Inc., Series 1100 as manufactured by Star Pipe Products, or approved equal.

10.08 INSPECTION AND TESTING

All pipelines shall remain undisturbed for 24 hours to develop complete strength at all joints. All pipelines shall be subjected to a hydrostatic pressure and leak test per the Specifications.

END OF SECTION

THIS PAGE INTENTIONALLY LEFT BLANK

SECTION 12 - PRESSURE PIPE CONSTRUCTION

12.01 GENERAL

The Work in this section includes construction of potable water mains, reclaimed water mains, sanitary force mains, and appurtenances.

Pressure pipelines are to be constructed at locations shown on the Contract Drawings. The City reserves the right to make minor changes in grade and/or alignments as the Work progresses.

Piping materials for pressure pipe installations shall be as follows:

Potable Water Main		
PVC Pipe	2-inch	
DI Pipe	6-inch and larger	
HDPE Pipe	2-inch and larger	ASTM D3350 meeting PE 3408 code designation
Galvanized Pipe	2-inch blow-off assemblies, 2-inch connections, 2-inch short tunneling, and 2-inch short relocations	
Fittings	2-inch PVC pipe:	PVC with gasketed joint
	2-inch galvanized pipe	Galvanized steel with threaded joint
	6-inch and larger pipe	Ductile Iron (DI) with push-on or mechanical joint

Sanitary Force Main		
PVC Pipe	4-inch through 36-inch:	ANSI/AWWA C900-16
DI Pipe	14-inch and larger pipe:	ANSI/AWWA C151
HDPE Pipe	2-inch and larger	ASTM D3350 meeting PE 3408 code designation
PVC Fittings	4-inch through 48-inch pipe:	DI with push-on or mechanical joint
DI Fittings	4-inch and larger pipe:	DI with push-on or mechanical joint
HDPE Fittings	2-inch and larger pipe:	ASTM D3350 meeting PE4710 code designation or DI with HDPE mechanical joint adapter

All existing water services shall be kept in service during the construction of water mains and the preparation of new service connections. Water meters requiring disconnection by the Contractor to accomplish the Work shall be promptly restored to service by the Contractor. The Contractor shall give a minimum of 24 hours prior written notice to all affected water customers of the intended service interruption.

All pipe, fittings, and appurtenances shall be furnished by the Contractor and be transported, delivered, and installed by the Contractor in accordance with the requirements of the subsection

headed "Laying and Jointing Pipelines."

All pipelines shall be tested in accordance with the requirements of the subsection headed "Testing and Disinfection of Pressure Pipelines: Pressure Test."

All potable water and reclaimed water pipelines shall be disinfected before they are put into service as specified in the subsection headed "Testing and Disinfection of Pressure Pipelines: Disinfection."

As-built drawings shall be submitted to the Engineer prior to acceptance of the Work and prior to commencement of the warranty period.

Standards referenced in this Section are the latest revision of the following specifications:

ANSI/AWWA C105	"Polyethylene Encasement for Ductile-Iron Piping for Water and Other Liquids"
ANSI/AWWA C110	"Ductile-Iron and Gray-Iron Fittings, 3-Inch through 48-Inch
ANSI/AWWA C111	"Rubber-Gasket Joints for Ductile-Iron Pressure Pipe and Fittings"
ANSI/AWWA C504	"Rubber-Seated Butterfly Valves"
ANSI/AWWA C509	"Resilient-Seated Gate Valves for Water and Sewerage Systems"
ANSI/AWWA C515	“Reduced Wall, Resilient-Seated Gate Valves for Water Supply Service”
ANSI/AWWA C550	"Protective Epoxy Interior Coating for Valves and Hydrants"
ANSI/AWWA C600	"Installation of Ductile-Iron Water Mains and Their Appurtenances"
ANSI/AWWA C605	"Underground Installation of PVC Pressure Pipe and Fittings for Water"
ANSI/AWWA C651	"Disinfecting Water Mains"
ANSI/AWWA C800	"Underground Service Line Valves and Fittings"
ANSI/AWWA C900-16	"Polyvinyl Chloride (PVC) Pressure Pipe and Fabricated Fittings, 4 In. Through 60 In."
ANSI/AWWA C901	"Polyethylene (PE) Pressure Pipe and Tubing, 1/2-Inch through 3-Inch for Water Service"
ANSI/AWWA C906	"Polyvinyl Chloride (PVC) Pressure Pipe and Fittings 4-Inch through 63-Inch, for Water Distribution and Transmission"
ANSI/AWWA C901	"Polyethylene (PE) Pressure Pipe and Tubing, 1/2-Inch through

3-Inch for Water Service"

ASTM A 126	“Specification for Gray Iron Castings for Valves, Flanges, and Pipe Fittings”
ASTM D 429	"Test Methods for Rubber Property - Adhesion to Rigid Substrates"
ASTM D 3139	"Standard Specification for Joints for Plastic Pressure Pipes using Flexible Elastomeric Seals"

12.02 DATA TO BE SUBMITTED

The Contractor shall submit shop drawings in accordance with the Specifications.

Pipe
Valves
Joints and joint accessories
Fittings
Specials and accessories
Special linings and coatings
Water service materials

12.03 MATERIALS

All pressure pipe materials shall be in accordance with the applicable requirements of the Technical Specifications sections headed:

DIP “Piping Materials: Ductile Iron Pipe and Fittings”
PVC “Piping Materials: PVC Pressure Pipe”
HDPE “Piping Materials: HDPE Pressure Pipe”

All pressure pipe materials (pipe, fittings, valves, valve boxes, tapping valves and sleeves, precast thrust blocks, blow-offs, house services, etc.) except fire hydrants, shall be furnished by the Contractor. All pressure pipe fittings and valves shall be cast and manufactured in the United States of America unless complete certification is furnished in accordance with ANSI/AWWA C110.

All materials furnished shall be new. Materials not specified herein or on the Contract Drawings shall conform to AWWA Standards and Industry Standards.

Piping, concrete, masonry, and all other materials shall conform to those materials as specified in the appropriate Technical Specifications sections for those materials. Specific pressure pipe and appurtenances materials shall conform to the following specifications:

12.03.01 2-INCH DIAMETER PIPE

1. Steel pipe shall be standard galvanized steel, Schedule 40, furnished in 21-foot lengths with both ends threaded.

2. All 2-inch steel fittings shall have screw type joints.

3. Pipe thread compound shall not be used. Threads shall be wrapped with teflon joint tape, non-hardening, Mil. Spec. T27730A. Cutting oils shall be dark, non-toxic, and equal to cutting oil manufactured by the Rigid Tool Company. The Contractor shall take caution not to allow cutting oil inside the pipe and shall remove all cuttings. Cutting oils shall be UL listed or NSF approved for use in potable water systems.

4. PVC pressure pipe to be used in the potable water system shall be Safety Blue in color or white with Safety Blue identification tape or color coded approved ink lettering as specified. PVC pressure pipe to be used in the reclaimed water system shall be Safety Purple in color or white with Safety Purple identification tape or approved color-coded ink lettering as specified.

   PVC pipe shall conform to the Technical Specifications section headed "Piping Materials - PVC Pressure Pipe."

5. HDPE pressure pipe shall conform to the Technical Specifications section headed, “Piping Materials – HDPE Pressure Pipe.”

12.03.02 VALVES - GENERAL

1. Valves shall be iron body, bronze mounted, and have joint ends as shown or specified. Valves shall have O-ring seals, unless otherwise specified.

2. A standard 2-inch square AWWA operating nut shall be provided on each valve. Valves shall have non-rising stems and shall open when the nut is turned counterclockwise. Each nut shall be marked with an arrow.

3. All valves of the same type shall be from the same manufacturer. Parts of valves of the same type and size shall be interchangeable. Unless otherwise specified, all valves shall be designed for a cold water working pressure of 150 psi.

4. All valves shall be furnished complete with gaskets, bolts, nuts, and glands necessary for installation.

5. All valves larger than 2-inch shall have restrained rubber gasketed compression joints, or mechanical joints with retainer glands, conforming to ANSI/AWWA C111, at the Contractor's option unless otherwise noted.

6. Valves used for sanitary force mains shall be the same as those used in other pressure pipe applications, unless otherwise specified.

7. Upon request, the valve manufacturer shall provide an affidavit of compliance, proof of design testing, and proof of production testing.

12.04 CONNECTIONS TO EXISTING MAINS

The Contractor shall connect the new pressure pipelines to the existing pressure pipelines at

locations as shown on the Contract Drawings and as specified. The Engineer shall be notified at least 2 working days prior to making connections. The time at which the connections are to be made and the manner of making the connections shall be subject to review and acceptance by the Engineer.

The connections to the existing pressure pipeline shall be made to minimize the time during which the existing pressure pipeline will be out of service. The Contractor shall utilize the necessary number of crews and types of equipment and shall work the necessary hours to ensure completion of the connections within the time specified.

12.05 CONSTRUCTION OPERATIONS

Pressure pipelines shall be installed in open trenches, except when another method, such as jacking, boring, or tunneling, is shown on the Contract Drawings, specified, or ordered. Jetting shall not be allowed under roadway, alley, or driveway.

Pipe and fittings shall not be strung in residential areas more than 3 weeks in advance of pipelaying, unless otherwise approved by the Engineer. The Contractor shall install pipelines, pressure test, disinfect, and restore the ground surface in pipeline segments of 3,500 linear feet or less, except as otherwise approved by the Engineer. The new segment of pipelaying shall not start until restoration has commenced on the previous segment, or as approved by the Engineer.

Pipeline segments shall be pressure tested and disinfected after pipelaying is complete, to minimize inconvenience to the Public, except as otherwise approved by the Engineer.

No excavation shall be left open over a weekend. All pavement openings shall be completely repaired as specified in the Technical Specifications section headed "Surface Restoration" within 7 days of opening, or a temporary asphaltic pavement patch placed and maintained daily.

Where shown on the Contract Drawings or where directed by the Engineer, the Contractor shall remove existing pipelines which are shown to be abandoned. Any such pipe, fitting, etc., shall be removed after the new pipeline (replacing the existing line) is accepted and put into service by the City. Removed pipe and appurtenances 6 inches or larger which are described elsewhere or deemed by the Engineer to be reusable shall be delivered to the City by the Contractor. All material not deemed reusable shall become the Contractor's property and shall be removed from the site by the Contractor. No additional payment will be made for salvaging pipe and fittings.

Short tunneling of pressure pipe shall be constructed as required to protect trees, shrubs, and existing surface or subsurface utilities and structures. Short tunnels shall be constructed to the lengths shown on the Contract Drawings, specified, or directed by the Engineer.

Existing fences shall be restored by the Contractor and shall be finished and installed so that the restoration is equal to or better than the original. Only those portions of original fencing or materials there from, that the Engineer approves for re-use, shall be used by the Contractor in fence restoration. All other materials, including lumber, paint, wood preservative, concrete, and metal products shall be furnished by the Contractor.

The cost of protecting, replacing, relocating, and maintaining (including using hay bales) storm and

sanitary sewerage facilities shall be included in the various unit price Pay Items, and no separate payment will be made therefore unless otherwise specified in other Pay Items.

12.06 LAYING AND JOINTING PRESSURE PIPELINES

All pressure pipeline installation shall comply with applicable standards of ANSI/AWWA C600, C605, and C906, and with these Specifications.

Mechanical joint fittings and valves installed in sections of unrestrained pipe, and in blow-offs, shall be installed using ductile iron retainer glands, as set forth in the Technical Specifications section headed "Piping Materials: Ductile Iron Pipe."

PVC push-on fittings for pressure pipelines shall conform to the Technical Specifications section headed "Piping Materials: PVC Pressure Pipe."

Laying and jointing of HDPE pressure pipe shall conform to the Technical Specifications section headed “Piping Materials: HDPE Pressure Pipe.”

Excavation and backfill shall conform to the Technical Specifications section headed "Excavation and Backfill."

In lieu of jacking and boring or pushing of pipe up to 4-inch in diameter, the Contractor may use a soft bore directional drilling process as provided by Flow Mole Corporation or approved equal.

Cover for all pressure pipeline Work, if not shown on the Contract Drawings, shall be not less than:

	2-inch and 4-inch	**6-inch and larger**
Under roadways and alleys:	36 inches	36 inches
Under grass and sidewalks:	24 inches	30 inches

Unless otherwise noted on the Contract Drawings or in other sections of this Specification, the pressure pipeline shall be handled and installed in strict accordance with the manufacturer's instructions and with the applicable AWWA Standards. If a conflict exists between the manufacturer's instructions and the AWWA Standards, the manufacturer's instructions shall govern.

Any defective material shall be removed from the job site immediately. Should a defect be discovered after the item has been placed in the trench, the replacement will be at the Contractor's expense. Materials shall be stored along installation routes in a manner acceptable to the Engineer or as described elsewhere in the Specifications.

Polyethylene wrapping shall be installed on ductile iron pipe and appurtenances where shown on the Contract Drawings or where ordered by the Engineer.

Polyethylene encasement materials and installation shall meet the applicable requirements of ANSI/AWWA C105. Care shall be taken while backfilling to prevent puncturing, tearing, or otherwise damaging the polyethylene wrapping.

The Contractor shall use every precaution during construction to protect the pressure pipeline against the entry of non-potable water, dirt, wood, small animals, and any other foreign material that would hinder or contaminate the operation of the pipeline. Where the groundwater elevation is above the bottom of the trench, the Contractor shall provide suitable dewatering equipment.

All dewatering shall meet the requirements set forth in the Technical Specifications section headed "Excavation and Backfill."

Watertight plugs of an approved type shall be installed in the ends of all pipe, fittings, and valves during 24-hour or longer periods when installation is not in progress, or as required to prevent ditch water, sand, etc. from entering the pipe.

Concrete thrust blocks of the proper size and type shall be furnished and installed at all locations where a change in the pipe alignment exceeds 7 degrees or dead ends, unless Contract Drawings show that adjacent pipe, in excess of 2 bells each direction, shall be restrained. Concrete thrust blocks used on 12-inch and larger mains shall be poured in place. Precast thrust blocks may be used on mains less than 12-inch in diameter. Thrust block concrete shall conform to the Technical Specifications section headed "Concrete, Masonry, and Reinforcing Steel."

Boring, soft boring, and jacking work other than new services shall strictly conform to all applicable stipulations of the State of Florida Department of Transportation Utility Accommodation Manual, unless otherwise specified. Softbore shall utilize a guided boring system, equal to FlowMole or DirectLine.

12.06.01 Expose Existing Pressure Pipeline and Record Elevation

The Contractor shall expose the existing pressure pipelines prior to the construction stake-out to determine the station, offset, and elevation, before actual construction begins. The Contract Drawings may be modified by the Engineer, as necessary, to accommodate the pressure pipelines which must remain.

12.06.02 Conflict Adjustment of Existing Pressure Pipelines

In some locations existing pressure pipelines intended to remain in service may need to be adjusted horizontally or vertically to avoid conflicts with the proposed storm drains, sanitary sewers, roadway base, manholes, inlets, or other proposed improvements. The conflict may not be shown on the Contract Drawings.

In the event that a conflict is encountered and confirmed by the Engineer, the adjustment to alleviate the conflict shall be constructed in accordance with the applicable "Obstruction Detail" or as ordered by the Engineer.

12.06.03 Pipe Joints

1. **Standard Mechanical Joints**: In making mechanical joints, the pipe shall be centered in the bells. The surfaces of ductile iron pipe with which the rubber gasket comes in contact shall be thoroughly brushed with a wire brush just prior to assembly of the joint. The surfaces of PVC pipe shall be wiped clean with a cloth and soapy water. A pipe lubricant

shall be brushed over the gasket just prior to installation. The gasket and gland shall be placed in position, the bolts inserted, and the nuts tightened finger tight. The nuts shall be tightened by means of a torque wrench, or as approved by the City, in such a manner that the gland shall be brought up evenly into the joint. The following range of bolt torques shall be applied:

Bolt Size (inch dia.)	Range of Torque (foot lbs.)
5/8	45 - 60
3/4	75 - 90
1	70 - 100

If effective sealing is not obtained at a maximum torque listed above, the joint shall be disassembled and reassembled after thorough cleaning.

2. **DI Pipe Push-On Joints**: In making up the push-on rubber gasket joint, the gasket seat in the socket shall be thoroughly brushed with a wire brush and the gasket shall be wiped with a clean cloth. The gasket shall be placed in the socket with the large round end entering first so that the groove fits over the bend in the seat. A thin film of approved lubricant shall then be applied to the inside surface of the gasket that will come in contact with the entering pipe. The plain end of the pipe to be entered shall be thoroughly brushed with a wire brush and placed in alignment with the bell of the pipe to which it is to be joined. Ends of cut pipe shall be ground to a smooth bevel edge before inserting in bell. The joint shall be made up by exerting sufficient force on the entering pipe so that its plain end is moved past the gasket until it makes contact with the base of the socket.

   Backhoe buckets or excavation equipment are not to be applied directly to the pipe.

3. **PVC Pipe Push-On Joints**: Procedures for the making of PVC pipe push-on joints shall be similar in nature to those set forth in the preceding paragraph (except the bell shall be wiped with a clean cloth). Procedures shall strictly follow the manufacturer's printed instruction for the making of joints. In a like manner, all other PVC pipeline Work shall be performed in accordance with the manufacturer's recommendations.

4. **Restrained Joints**: Ductile iron mechanical joint pipe, fittings, and valves 12-inch and smaller that require restraint shall be installed using ductile iron retainer glands, as specified. The glands shall be installed in accordance with the manufacturer's recommendations. Glands using a frangible bolt for setting the restraining devices shall be tightened with standard wrenches.

   Glands using standard bolts for setting the restraining devices shall be tightened with a torque wrench. The assembly shall be given 2 heavy coats of a bituminous coating after installation.

   Restrained push-on joint pipe, fittings, and valves, where shown on the Contract Drawings, shall be with a restraining gland or restraining gasket, as specified.

Pipe, fittings, and valve joints shall be restrained at locations shown on the Contract Drawings, or as specified. In addition, all other fittings and valves shall be installed using a ductile iron retainer gland.

The following shall apply to various restrained joint/pipe size type:

Pipe Size (Inches)	Restrained Joint Type
2	No restrained joint allowed
4 through 12	Mechanical joint/retainer glands Tyton Pipe/Loc Fast Gasket, or equal
16 and larger	Mechanical joint/retainer glands TR Flex, or equal, pipe valves and fittings

12.06.04 Color Coding

Prior to backfilling, all pressure pipelines shall be identified with color coding. The applicable color codes, with light color stabilant, are:

Pipe Use	Color Coding
Potable Water	Safety Blue
Sanitary Sewer	Safety Green
Reclaimed Water	Safety Purple

1. **Coding on the Pipe**: HDPE and PVC pipe shall be colored at the point of manufacture. If black or white pipe must be used, pipe shall have City approved color coded ink lettering stamped on the pipe or shall be continuously taped with plastic adhesive tape using the color coding as stated above. Plastic adhesive tape shall be applied as follows:

   Black and white 2-inch and 4-inch pipe -- continuously taped at top center.

   Black and white 6-inch and larger pipe -- continuously taped at "10, 12, and 2 o'clock." Ductile iron pipe shall be continuously painted along the top one-third of the pipe with a 2-part high build epoxy-polyamide paint or approved equal. The paint shall be dry prior to the pipe being installed.

   Ductile iron pipe wrapped in color coded polyethylene wrapping is not required to be painted.

2. **Coding above the Pipe**: Pipe shall have 3-inch detectable metallic tape of the proper color placed directly above the pipe and 12-inch below finished grade or 6-inch detectable tape between 12-inch and 24-inch below finished grade.

12.06.05 Valves and Valve Boxes

Valves shall be installed in a closed position, free from all distortion and strain, and left in satisfactory operating condition. Valves shall be tested in place by the Contractor, as far as practicable, and any defects in valves or connections shall be corrected to the satisfaction of the Engineer.

Tapping sleeves shall be pressure tested prior to making the tap.

Valve boxes with stay-put cover shall be vertical and concentric with the valve stem. Any valve box which is moved from its original position, preventing the operation of the valve stem, shall be satisfactorily reset by the Contractor at his expense.

Please see the Specifications for additional information for Valves.

12.06.06 Connections (Tie-ins) and Shutdowns

The Contractor shall furnish all labor and equipment necessary for the connection of approved pipelines to the existing system and the shutdown, removal or disconnection and plugging of existing pipelines as indicated on the Contract Drawings or as directed by the Engineer.

This may be required in instances where existing pipelines are to be abandoned or where a short segment of existing pipeline must be cut out and adjusted either vertically or horizontally to avoid a conflict with a proposed storm drain or storm drain structure, sanitary sewer, or other proposed improvement.

The Contractor shall make all taps and tie-ins required, under the direct observation of the Engineer.

12.07 PIPELINE CLEANING

The cleaning of the pipeline shall be done by the controlled and pressurized passage of a polyurethane pig of varying dimensions, coatings and densities as determined by the City through the piping system.

A series of pigs shall be entered into the system at a point as near to the beginning as is logistically and mechanically feasible.

A launching assembly shall be used as the entrance point for the pig. This assembly shall allow for the following:

1. The entering of pigs into the system by providing the means to induce flow from an external source, independent of the flows and pressures immediately available from the system, on the back of the pig to develop sufficient pressure to force the pig through the system.
2. A means to control and regulate the flow.
3. A means to monitor the flows and pressures.
4. A means to connect and disconnect from the system without any disruption to the operation of the system.

The pig shall be removed or discharged from the system at a point as near to the end as is logistically and mechanically feasible.

The contractor shall be responsible for the retrieval of the pig at the discharge point. This may include setting a trap that will not disrupt normal flow and operations but will capture the pig and any

debris. A retrieval assembly may also be used but said assembly shall be able to connect and disconnect from the system without any disruption to the operation of the system.

Alternative launching and retrieval methods shall be done with the prior approval of the City.

Any pig that cannot progress through the piping system shall be located by the contractor and removed by excavation of the pipe to remove the blockage. All pipe repairs shall be the responsibility of the contractor and shall be performed with as little disruption to the system as possible.

Any increase in pressure that cannot be accounted for, i.e. fittings or valves or additional cleaning runs, shall be investigated, per the Engineers' review and acceptance, by locating the pig at the beginning of the increased pressure and excavating to determine the cause of the pressure increase. All pipe repairs shall be the responsibility of the contractor and shall be performed with as little disruption to the system as possible.

Final flushing of the cleansed lines shall be performed after the last successful run of the pig as determined by the City. The contractor shall be responsible for all applicable flushing and disinfection requirements for potable water lines.

The contractor shall maintain and provide a report at the end of the cleaning procedure containing the following:

1. The pressures in the pipe during the pigging procedure.
2. Any inline problems encountered during the procedure including all excavations with detailed locations, reason for the excavation and any corrective measures taken to the pipeline.
3. A record of the pigs used, their sizes, styles and other pertinent information regarding what materials were used during the cleaning.
4. An analysis of the condition of the pipeline before and after the cleaning procedure.

12.08 TESTING AND DISINFECTION OF PRESSURE PIPELINES

All new pressure pipelines shall be subjected to a water pressure test between valves. In order to expedite the restoration of certain surface facilities, it may be required that individual sections between valves be tested as soon as the valves are installed. Disinfection shall be accomplished after the pressure test requirements have been met for the entire segment of pressure pipe.

The Contractor shall furnish all labor, materials, equipment, and chemicals to perform the required pressure tests and disinfection. All testing and disinfection will be subject to City inspection. All new valves shall be operated by the Contractor. However, all tie-in valves to the existing water system shall only be operated with the approval of, and in the presence of, the City, and shall be scheduled to be performed during the standard work hours of City staff, unless otherwise approved by the Engineer.

All existing valves shall be operated by the City or by the Contractor under the direct supervision of the City.

Testing and disinfection of pressure pipelines shall be completed per Flushing, Testing, and Disinfection section.

12.09 SURFACE RESTORATION AND MISCELLANEOUS

All surfaces disturbed by the Contractor shall be restored to their original condition in conformance to the Technical Specifications sections headed "Surface Restoration".

Sanitary sewers and laterals which cross a new potable water pipeline with less than 18 inches clear vertical separation, shall be replaced with 20 linear feet of ductile iron pipe, PVC pressure pipe (ANSI/AWWA C900-16), or SDR26 gravity pipe centered on the new pipeline, or as ordered by the Engineer.

Sanitary sewers and/or laterals which conflict with the new pipeline or are damaged by pipeline construction shall be reconstructed with ductile iron pipe, PVC pressure pipe (ANSI/AWWA C900-16), or SDR26 gravity pipe, as ordered by the Engineer.

Each valve box in an unpaved area shall have an 18-inch by 18-inch by 4-inch concrete pad. Pad shall be 1 inch above grade, and sod shall be so placed to maintain this 1 inch.

END OF SECTION

SECTION 15 - FLUSHING, TESTING AND DISINFECTION

15.01 WORK INCLUDED

A. Flushing, Pressure Testing, and Disinfection of systems including, but not limited to, the pipelines shown in the Contract Documents.

B. Contractor shall furnish all necessary pumps, hoses, piping, fittings, meters, gauges, chemicals and labor to conduct specified testing.

C. Testing shall be repeated at the Contractor's expense until satisfactory results are achieved.

15.02 REFERENCES

A. AWWA C651 - Standard for Disinfecting Water Mains.

B. UNI-B-6 - Recommended Practice for Low-Pressure Air Testing of Installed Sewer Pipe

C. ASTM F1417 - Standard Test Method for Installation Acceptance of Plastic Gravity Sewer Lines Using Low-Pressure Air

D. AWWA C600 – Standards for Installation of Ductile-Iron Water Mains and Their Appurtenances.

E. AWWA C605 - Standard for Underground Installation of Polyvinyl Chloride (PVC) Pressure Pipe and Fittings for Water.

F. ASTM 2164 - Standard Practice for Field Leak Testing of Polyethylene (PE) and Crosslinked Polyethylene (PEX) Pressure Piping Systems Using Hydrostatic Pressure

15.03 SUBMITTALS

A. Test Reports: Indicate results comparative to specified requirements. Submit two (2) copies of test results to Engineer in accordance with Submittal specifications.

B. Final approval of the bacterial samples shall be received from the Florida Department of Environmental Protection prior to the time that the system is placed into operation. Sampling procedures shall be done in accordance with FDEP requirements.

C. Bacteriological sampling locations shall meet FDEP requirements and be taken where shown on the drawings and as directed by the Engineer at no additional cost to Owner. Costs for all bacteriological testing shall be borne by the Contractor.

15.04 QUALITY ASSURANCE

A. Perform Work in accordance with these specifications, applicable utility provider standards, and the applicable reference standards listed in Section 1.03 above.

15.05 REGULATORY REQUIREMENTS

A. Conform to applicable FDEP requirements for performing the work of this Section.

15.06 DISINFECTION CHEMICALS

A. Chemicals: The disinfecting agent shall be sodium hypochlorite solution ANSI/AWWA B303 or liquid chlorine ANSI/AWWA B301. Dry hypochlorite, similar to "HTH" or equal may also be used as the disinfecting agent. Bleach or Clorox is not acceptable.

15.07 FLUSHING AND PRESSURE TESTING - PIPING

The Contractor shall furnish and install suitable temporary testing plugs or caps for the water lines, all necessary pressure pumps, hose, pipe connections, meters, gauges and other similar equipment, and all labor required, all without additional compensation for conducting pressure and leakage tests and flushing of the new water lines. Flushing and pressure testing shall be conducted in the following order:

A. After all piping lines have been installed and before pressure testing and final connections to equipment, each run of pipe shall be thoroughly flushed so as to remove all debris and foreign matter from the piping and equipment. Clean and flush all piping using potable water. Cleaning and Flushing shall be achieved by pigging with two (2) polyurethane foam pigs as manufactured by Girard Poly-Pig Inc. or "an approved equal". For watermain installation, the Contractor must ensure that there will be no contaminated water re-entering the main where the pig is flushed out, or it will be re-pigged at the Contractor's expense. Each pig will run through the line prior to running the second pig. On short runs (100 feet or less), or small lines (less than 4"), cleaning shall be accomplished by flushing with a minimum velocity of 2.5 feet per second. Contractor shall furnish and install required pig launch and exit assemblies. Non-abrasive pigs shall be employed. Flushed water may be discharged to the closest public catch basins and be coordinated with the City. Contractor to provide means of discharging water to catch basins at Contractor's expense.

B. Pressure and leakage tests shall be conducted in the presence of the Engineer, or his representative. All pressure mains, fittings, water services, and appurtenances shall undergo pressure and leakage tests. The Contractor will provide all necessary apparatus including a suitable pressure gage, pump, measuring device, piping connections and fittings and the necessary labor to conduct the test. Leakage is defined as the quantity of water added to the pipe being tested during the test period. The Contractor shall submit to the Engineer the testing pattern he proposes to follow prior to testing for the Engineer's approval. The Contractor shall not test more than 1,500 feet of pipe in a single test without approval from the Engineer.

C. In preparation for pressure testing the following parameters must be followed:

1. All air must be vented from the pipeline prior to pressurization. This may be accomplished with the use of the air relief valves or corporation stop valves, vent piping in the testing hardware or end caps, or any other method which adequately allows air to escape the pipeline at all high points. Venting may also be

accomplished by 'flushing' the pipeline in accordance with the parameters and procedures as described in AWWA C600/C605.

2. The pipeline must be fully restrained prior to pressurization. This includes complete installation of all mechanical restraints per the restraint manufacturer's guidelines, whether permanent or temporary to the final installation. This also includes the installation and curing of any and all required thrust blocking. All appurtenances included in the pressure test, including valves, blow-offs, and air-relief valves shall be checked for proper installation and restraint prior to beginning the test.
3. Temporary pipeline alignments that are being tested, such as those that are partially installed in their permanent location shall be configured to minimize the amount of potentially trapped air in the pipeline.

15.07.01 PRESSURE TESTING DUCTILE IRON AND PVC PIPING SYSTEMS:

1. The test pressure for piping constructed of ductile iron and PVC pipe shall be a minimum of 150 psi and this pressure shall be maintained for a period of not less than two hours. Tests shall be made between valves and as far as practicable and as approved by the Engineer. Potable water from the distribution system shall be used. Pressure shall not vary more than five (5) psi for piping during the test periods or as approved by the Engineer. Additionally, allowable leakage shall be computed on the basis of AWWA C-600, C-605 where practical.
2. All leaks evident at the surface shall be uncovered and repaired regardless of the total leakage as indicated by the test, and all pipes, valves and fittings and other materials found defective under the test shall be removed and replaced at the Contractor's expense. Tests shall be repeated until leakage has been reduced below the allowable amount.
3. Should, in the judgment of the Engineer, it not be practical to follow the foregoing procedures exactly for any reason, modifications in the procedure shall be made as approved by the Engineer and the City.

15.07.02 PRESSURE TESTING HDPE PIPING SYSTEMS:

1. The HDPE pipe installed by the directional drill method shall be pressure tested after the entire length is installed.

2. The test pressure for all piping systems shall be a minimum of 150 psi and this pressure shall be maintained for a period of two hours. Testing procedure shall be in accordance with ASTM F2164 and generally as follows.

    a. Take safety precautions as required and as specified in ASTM F2164.
    b. Completely fill pipe with clean water and remove all air from pipe to be tested.
    c. Allow water in pipe to equalize to a common temperature with surrounding ground/groundwater for 24 hours
    d. With air removed and temperature equalized, gradually bring pipe being tested to test pressure plus 10 psi. If test pressure cannot be achieved, discontinue testing and correct fault.

e. Add make-up liquid as required to maintain test pressure plus 10 psi over a 4 hour period.
f. Test Phase - Immediately following the end of the 4 hour period, reduce pressure by 10 psi and monitor pressure for 1 hour. Do not increase pressure or add make up water.
g. Pass/Fail Criteria - If no leakage is observed, and pressure during the test phase remains steady (within 5% of the test pressure) for the 1 hour test phase period, a passing test is indicated.
h. Retesting – If retesting is necessary, depressurize the test section in accordance with ASTM F2164 and correct any faults. Do not attempt to correct any faults while the system is under pressure.
i. Allow the test section to "relax" for at least 8 hours before re-pressurizing. After the relaxation period, repeat the initial expansion and test phases as described above.
j. All leaks shall be repaired regardless of the total leakage as indicated by the test, and all pipes, valves and fittings and other materials found defective under the test shall be removed and re placed at the Contractor's expense. Tests shall be repeated until leakage has been reduced below the allowable amount.
k. All visible leaks shall be repaired regardless of the total leakage as indicated by the test, and all pipes, valves and fittings and other materials found defective under the test shall be removed and replaced at the Contractor's expense. Tests shall be repeated until leakage has been reduced below the allowable amount.
l. Should, in the judgment of the Engineer, it not be practical to follow the foregoing procedures exactly for any reason, modifications in the procedure shall be made as approved by the Engineer. In any event, the Contractor shall be responsible for the ultimate tightness of the watermain within the preceding requirements.

15.07.03 PRESSURE TESTING FUSIBLE PVC SYSTEMS:

1. Fusible PVC pipe installed by the directional drill method shall be pressure tested after the entire length is installed.

2. The test pressure for the water piping constructed fusible PVC pipe shall be a minimum of 150 psi. This pressure shall be maintained for a period of not less than two hours. Tests shall be made between valves and as far as practicable and as approved by the Engineer. Potable water from the distribution system shall be used. Pressure shall not vary more than five (5) psi for piping during the test periods or as approved by the Engineer. Additionally, allowable leakage shall be computed on the basis of AWWA C-600, C-605 where practical.

3. All leaks evident at the surface shall be uncovered and repaired regardless of the total leakage as indicated by the test, and all pipes, valves and fittings and other materials found defective under the test shall be removed and replaced at the Contractor's expense. Tests shall be repeated until leakage has been reduced below the allowable amount.

4. Should, in the judgment of the Engineer, it not be practical to follow the foregoing procedures exactly for any reason, modifications in the procedure shall be made as approved by the Engineer and the City. In any event, the Contractor shall be responsible for the ultimate water tightness of the piping within the preceding requirements

15.07.04 LEAKAGE TESTING FOR NON-PRESSURE PIPING

A. Gravity sanitary sewers need to be tested for leakage.

B. Gravity sanitary sewer leakage testing may include appropriate water or low pressure air testing. The leakage outward or inward (exfiltration or infiltration) shall not exceed 25 gallons per inch of pipe diameter per mile per day for any section of the system. An exfiltration or infiltration test shall be performed with a minimum positive head of two feet. The air test, if used, shall be conducted in accordance with one of the following Standards:

1. ASTM F1417
2. UNI-B-6

C. The testing method selected shall properly consider the existing groundwater elevations during the test.

15.07.05 DEFLECTION TESTING FOR NON-PRESSURE PIPING

D. After completion of the backfill, the engineer or owner may require that a deflection test be performed.

E. Deflection tests should be conducted using a go/no-go mandrel. The mandrel's outside dimension shall be sized to permit no more than 7.5 percent deflection. The percent deflection shall be established from the base inside diameter of the pipe. If the internal beading of the fused joints for the pipe is not required to be removed, the mandrel shall account for this clearance as well. The mandrel shall be approved by the owner or engineer prior to use. Lines that permit safe entry may allow other deflection test options, such as direct measurements.

15.08 DISINFECTION FOR WATER MAIN INSTALLATION

A. The Contractor shall furnish and install suitable temporary connections to the piping, all necessary pressure pumps, hose, pipe connections, meters, gauges and other similar equipment, and all labor required, all without additional compensation for the disinfection of all required potable water piping systems. Disinfection shall be in accordance with the City. If no standards exist, disinfection shall be conducted on the following systems in the following manner:

1. All relocated and new potable water and private fire line piping.

B. Conform to AWWA Standards and as modified herein.

C. Maintain disinfectant for a minimum of 8 hours in such a manner that the entire system will be filled with water containing a minimum chlorine concentration of 50 ppm at any point.

D. After the disinfecting agents have been permitted to remain for the specified contact periods, the water lines, and valves shall be thoroughly flushed with water until the residual chlorine tests are less than 4 PPM in each instance. The determination of the amount of residual chlorine in the system shall be made at such points and in accord with standard tests by means of a standard orthotolodine test set.

E. Replace permanent system devices removed for disinfection.

15.09 BACTERIOLOGICAL SAMPLING FOR WATER MAIN INSTALLATION

A. It shall be the responsibility of the Contractor under this contract to perform the bacteriological testing required by the Florida Department of Environmental Protection and the City to obtain clearance of all piping. The Contractor shall be responsible to disinfect and repeat testing as needed until clearance is obtained for all required systems. The Contractor shall be responsible to pay for additional water needed if the bacteriological testing must be repeated.

B. The piping requires two (2) passing consecutive daily samples taken from the locations called out on the plans or as determined by the Engineer. The samples shall be taken concurrently at all the respective sample point locations.

C. Sampling must be coordinated with Engineer and other construction activities so as to minimize re-sampling.

D. Contractor shall submit schedule for bacteriological testing and pressure tests.

E. The Contractor shall incur all costs needed to provide bacteriological clearance of the piping systems.

F. If repeated tests of such samples show the presence of coliform organisms, the disinfection shall be repeated until tests indicate an absence of contamination.

15.10 QUALITY CONTROL

A. The laboratory and personnel collecting bacteriological samples shall be Florida State certified in accordance with FDEP requirements.

15.11 CONNECTIONS TO EXISTING MAINS

A. The Contractor shall make connections to existing mains as shown on the drawings only after the new mains have passed their pressure and leakage test and completed the disinfection and bacteriological clearance procedures as required.

END OF SECTION

SECTION 16 - SANITARY SEWER BYPASS PUMPING

16.01 SCOPE OF WORK

The Contractor shall furnish all labor, materials, equipment and incidentals required to maintain existing and anticipated flows within the affected portion of the collection system throughout the construction period.

16.02 PUBLIC IMPACTS

The contractor shall not create a public nuisance due to excessive noise or dust, nor impact the public with flooding of adjacent lands, discharge of raw sewage, or release of other potential hazards, nor shall he encroach on or limit access to adjacent lands. No extra charge may be made for increased costs to the contractor due to any of the above.

16.03 SUBMITTALS

The Contractor shall, within 30 days of the date of the Notice to Proceed, submit to the Project Manager a detailed Bypass Pumping Plan for each site by-pass pumping will be needed. The Bypass Pumping Plan shall address all measures and systems to prevent a sanitary sewer overflow (SSO) as defined by the EPA. The Plan shall include as a minimum:

A. Working drawings and sketches showing work location, pump location, piping layout & routing. Show all proposed encroachment and access impacts on adjacent properties or facilities.
B. Pump, control, alarm and pipe specifications or catalog cuts. Detailed sketch of controls and alarm system.
C. Power requirements and details on methods to provide by-pass power or fueling.
D. Calculation and determination of response times to prevent an SSO after a high-water alarm.
E. Procedures to be taken in case of power, pump, or piping failures; including contact names and numbers for emergency notifications.
F. Frequency and specific responsibility for monitoring pump operation, fuel levels, pump maintenance and entire length of piping.

16.04 EQUIPMENT

A. Pumps:

1. By-pass pumping system shall consist of at least a primary pump and a backup pump. Each pump shall have a minimum pumping capacity of 150% of the anticipated peak flows. When bypassing a pump station, 150% of the lift station capacity (G.P.M. & T.D.H) shall be provided.
2. Pumps shall be low noise or sound attenuated. The noise level at any operating condition, in any direction, shall not exceed 70dBA at a distance of twenty-three (23) feet (7 meters) from the pump and/or power source.

B. Controls:

The by-pass pump system shall be equipped with automatic controls and an alarm system. The automatic controls will automatically start the backup pump in the event of a high-water condition or failure of the primary pump. The alarm system will immediately notify the Contractor of a pump failure or high-water condition.

C. Pipe:

Pipe shall be of adequate size and capacity to match the pumps. Pipe type and materials will depend on the particulars of the site conditions and shall be detailed in the Bypass Pumping Plan. Contractor will provide all connections.

16.05 SITE CONDITIONS

Site conditions will vary by site. Contractor is responsible to determine and address requirements such as traffic control, excavation, connections & fittings, impacts on access to adjacent properties, routing and support of by-pass piping, etc., in the Bypass Pumping Plan.

16.06 ON-SITE MONITORING

A. The Contractor shall have personnel experienced with the pumps and controls on site within the calculated response time to prevent an SSO after a high-water alarm.

B. During by-pass operations, the Contractor shall have posted on site with the permit, a copy of the approved Plan and the name and 24-hour contact number of the primary response person, the job site superintendent, and the construction company owner.

16.07 OPERATIONS

A. The Contractor is responsible for securing and providing power, fuel, site security, traffic control and all other supplies, materials and permits required for the by-pass pumping.

B. Contractor shall demonstrate automatic pump switching and alarm system to the satisfaction of the City of St. Pete Beach, prior to beginning by-pass pumping.

Satisfactory demonstration shall be documented by the engineer's, PM's or the City's dated signature on the posted copy of the approved Bypass Pumping Plan.

16.08 DAMAGE RESTORATION & REMEDIATION

A. The Contractor shall be responsible for any pre-pump notifications, all restoration of pre-pump conditions and any damage caused by by-pass operations.

B. Should there be an SSO caused by or as a direct result of the by-pass pumping, the contractor is responsible for all immediate & long term response, notifications, clean up, mitigation, etc. Copies of all written response plans, notifications, documentation, mitigation plans, etc., shall be submitted to the City.

END OF SECTION

THIS PAGE INTENTIONALLY LEFT BLANK

SECTION 17 - VALVES AND APPURTENANCES

17.01 GENERAL

17.01.01 SCOPE OF WORK

The Contractor shall furnish all labor, materials, equipment and incidentals required and install complete and ready for operation all valves and appurtenances as shown on the Contract Drawings and as specified herein.

All valves and appurtenances shall be of the size shown on the Contract Drawings and, to the extent possible, all equipment of the same type on the Project shall be from one manufacturer.

All valves and appurtenances shall have the name of the manufacturer and the working pressure for which they are designed cast in raised letters upon some appropriate part of the body.

All valves shall have a factory applied, fusion bonded epoxy coating on interior and exterior unless noted otherwise in the Contract Drawings or the Specifications.

All bolts, nuts, washers, and other trim hardware shall be 316 stainless steel hardware must be 316 SS unless otherwise noted and reviewed by the Engineer.

The equipment shall include, but not be limited to, the following:

1. Gate Valves (Sec. 17.03)
2. Pressure Sustaining and Check Valves (Sec. 17.04)
3. Ball Valves for PVC Pipe (Sec. 17.05)
4. Butterfly Valves (Sec. 17.06)
5. Plug Valves (Sec. 17.07)
6. Valve Actuators (Sec. 17.08)
7. Air Release Valves (Sec. 17.09)
8. Valves Boxes (Sec. 17.10)
9. Corporation Cocks (Sec. 17.11)
10. Flange Adapter Couplings (Sec. 17.12)
11. Flexible Couplings (Sec. 17.13)
12. Hose Bibs (Sec. 17.14)
13. Check Valves (Sec. 17.15)
14. Hydrants (Sec. 17.16)
15. Tapping Sleeves and Tapping Valves (Sec. 17.17)

17.01.02 DESCRIPTION OF SYSTEMS

All of the equipment and materials specified herein are intended to be standard for use in controlling the flow of potable water, reclaim water, wastewater, etc., depending on the applications.

17.01.03 QUALIFICATIONS

All of the types of valves and appurtenances shall be products of well-established reputable firms who are fully experienced and qualified in the manufacture of the particular equipment to be furnished. The equipment shall be designed, constructed and installed in accordance with the best practices and methods and shall comply with these Specifications as applicable. Valves shall be as covered under mechanical devices in Section 8 of ANSI/NSF Standard 61.

17.01.04 SUBMITTALS

Submittals shall conform to the following:

A. Submit to the City within 30 days after execution of the contract a list of materials to be furnished, the names of the suppliers and the date of delivery of materials to the site.

B. Complete shop drawings of all valves and appurtenances shall be submitted to the City and Engineer for review and acceptance in accordance with the Specifications.

17.02 TOOLS

Special tools, if required for normal operation and maintenance shall be supplied with the equipment.

17.03 GATE VALVES

Gate Valves shall conform to the following:

A. All buried valves shall have cast or ductile iron three (3) piece valve bodies.

B. Where indicated on the Contract Drawings or necessary due to locations, size, or inaccessibility, chain wheel operators shall be furnished with the valves. Such operators shall be designed with adequate strength for the valves with which they are supplied and provide for easy operation of the valve. Chains for valve operators shall be galvanized.

C. Where required, gate valves shall be provided with a box cast in a concrete slab and a box cover. Length of box shall include slab thickness. Box cover opening shall be for valve stem and nut. Valve wrenches and extension stems shall be provided by the manufacturer to actuate the valves. The floor box and cover shall be equal to those manufactured by Rodney Hunt Machine Company, Orange, Massachusetts, Clow, DeZurik or approved equal.

D. Gate valves with 3inch-20inch diameters shall be resilient seated, manufactured to meet or exceed the requirements of AWWA C509 or C515 and UL/FM of latest revision and in accordance with the following specifications. Valves shall have an unobstructed waterway equal to or greater than the full nominal diameter of the valve.

E. Wrench nut shall be provided for operating the valve.

F. Valves shall be suitable for an operating pressure of 200 psi and shall be tested in accordance with AWWA C509 or C515. Mueller, Kennedy, M&H, and Clow are acceptable valves.

G. All exterior bonnet bolts, nuts and studs shall be 316 stainless steel.

17.04 PRESSURE SUSTAINING AND CHECK VALVE

Pressure sustaining and check valves shall conform to the following:

A. Pressure sustaining and check valve shall be pilot operated diaphragm actuated valve with cast iron body, bronze trim, and 125-pound flanged ends. The valve shall be hydraulically operated, diaphragm type globe valve. The main valve shall have a single removable seat and a resilient disc, of rectangular cross section, surrounded on three and a half sides. The stainless-steel stem shall be fully guided at both ends by a bearing in the valve cover, and an integral bearing in the valve seat. It shall be sleeved at both ends with delrin. No external packing glands are permitted and there shall be no pistons operating the main valve or any controls. The valve shall be equipped with isolation cocks to service the pilot system while permitting flow if necessary. Main valve and all pilot controls shall be manufactured in the United States of America. Valve shall be single chamber type, with seat cut to 5 degrees taper.

B. Valve shall maintain a minimum (adjustable) upstream pressure to a preset (adjustable) maximum. The pilot system shall consist of two direct acting, adjustable, spring loaded diaphragm valves.

C. Valve shall be cast iron (ASTM A48) with main valve trim of brass (QQB-B-626) and bronze (ASTM B61). The pilot control valves shall be cast brass (ASTM B62) with 303 stainless steel trim. All ferrous surfaces inside and outside shall have a 2-part epoxy coating. Valve shall be similar in all respects to CLA-VAL Company, Model 692G-01ABKG, as manufactured by CLA-VAL Company, Winter Park, Florida, or similar pressure sustaining and check valve as manufactured by Golden Alderson; or approved equal.

17.05 BALL VALVES FOR PVC PIPE

Ball valves shall conform to the following:

A. Ball valves for PVC pipe shall be of PVC Type 1 with union, socket, threaded or flanged ends as required. Ball valves shall be full port, full flow, all plastic construction, 150 psi rated with Teflon seat seals and T-handles. PVC ball valves shall be as manufactured by Celanese Piping Systems, Inc., Wallace and Tiernan, Inc., Plastiline, Inc., or approved equal.

B. All valves shall be mounted in such a position that valve position indicators are plainly visible when standing on the floor.

17.06 BUTTERFLY VALVES

Butterfly valves shall conform to the following:

A. Butterfly valves shall conform to the AWWA Standard Specifications for Rubber Seated Butterfly Valves, Designated C504, except as hereinafter specified. Valves, except as specified hereinafter, shall be Class 150A or B, except that valves furnished downstream of the high service pumps shall be Class 250 and equal to those manufactured by Henry Pratt Company, DeZurik, Mueller, or approved equal. M&H/Kennedy/Clow are not generally approved equals. Ductile iron conforming to ASTM A536, Grade 65-45-12 shall be provided for all Class 250 valves. All valves shall be leak tested at 200 psi.

B. The face-to-face dimensions of flanged end valves shall be in accordance with Table 1 of above mentioned AWWA Specification for short-body valve. Adequate two-way thrust bearings shall be provided. Flange drilling shall be in accordance with ANSI B16.1.

C. Valve seats shall be an EPDM elastomer. Valve seats 24 inches and larger shall be field adjustable and replaceable without dismounting operator disc or shaft and without removing the valve from the line. All retaining segments and adjusting devices shall be of corrosion resistant material with stainless Nylock screws and be capable of the 1/8-inch adjustment. Valves 20 inches and smaller shall have bonded or mechanically restrained seats as outlined in AWWA C 504. Where the EPDM seat is mounted on the valve body, the mating edge of the valve disc shall be 18-8 stainless steel or Nickel-Chrome, 80-20%. Where the EPDM seat is mounted on the valve disc, the valve body shall be fitted with an 18-8 stainless steel seat offset from the shaft, mechanically restrained and covering 360 degrees of the peripheral opening or seating surface.

D. The valve body shall be constructed of ductile iron or close grain cast iron per ASTM A126, Class B with integrally cast hubs for shaft bearing housings of the through boss-type. Butterfly valves of the "wafer" or "spool" type will not be accepted.

E. The valve shaft shall be turned, ground, and polished constructed of 18-8, ASTM A-276, Type 304 stainless steel and designed for both torsional and shearing stresses when the valve is operated under its greatest dynamic or seating torque. Shaft shall be of either a one-piece unit extending full size through the valve disc and valve bearing or it may be of a stub shaft design. Shaft bearings shall be Teflon or nylon, self-lubricated type.

F. All valves shall be subject to hydrostatic and leakage tests at the point of manufacture. The hydrostatic test for Class 250 valves shall be performed with an internal hydrostatic pressure equal to 500 psi applied to the inside of the valve body of each valve for a period of five minutes. During the hydrostatic test, there shall be no leakage through the metal, the end joints or the valve shaft seal. The leakage test for the Class 250 valves shall be performed at a differential pressure of 230 psi and against both sides of the valve. No adjustment of the valve disc shall be necessary after pressure test for normal

operation of valve. The Class 150 valves shall be tested in conformance with AWWA C-504.

G. In general, the butterfly valve operators shall conform to the requirements of Section 3.8 of the AWWA Standard Specifications for Rubber Seated Butterfly Valves, Designation C504, insofar as applicable, and as herein specified.

H. Gearing for the operators shall be totally enclosed in a gear case in accordance with paragraph 3.8.3 of the above mentioned AWWA Standard Specification.

I. Operators shall be capable of seating and unseating the disc against the full design pressure of velocity, as specified for each class, into a dry system downstream and shall transmit a minimum torque to the valve. Operators shall be rigidly attached to the valve body.

J. The manufacturer shall certify that the required tests on the various materials and on the completed valves have been satisfactory and that the valves conform with all requirements of this Specification and the AWWA standard.

K. Where indicated on the Contract Drawings, extension stems, floor stands, couplings, stem guides, and floor boxes as required shall be furnished and installed.

17.07 PLUG VALVES

Plug valves shall conform to the following:

A. All plug valves shall be eccentric plug valves capable of sustaining 150 psi in either direction without leaking.

Exception: Single direction plug valves may be used if it is clearly demonstrated they will never be required to resist pressure in both directions either in service or during pipe line testing.

B. Plug valves shall be tested in accordance with current AWWA Standard C-504-80 Section 5. Each valve shall be performance tested in accordance with paragraph 5.2 and shall be given a leakage test and hydrostatic test as described in paragraphs 5.3 and 5.4. Plug valves shall be Kennedy, Dezurik, or approved equal.

C. Plug valves shall be of the non-lubricated eccentric type with resilient faced plugs and shall be furnished with end connections as shown on the Contract Drawings. Flanged valves shall be faced and drilled to the ANSI 150 lb. standard. Mechanical joint ends shall be to the AWWA Standard C111-72. Bell ends shall be to the AWWA Standard C100-55 Class B. Screwed ends shall be to the NPT standard.

D. Plug valve bodies shall be of ASTM A126 Class B Semi-steel, 31,000 psi tensile strength minimum in compliance with AWWA Standard C507-73, Section 5.1 and AWWA Standard C504-70 Section 6.4. Port areas for valves 20-inches and smaller shall

be full port 100 percent of full pipe area. Valves 24-inch and larger shall have a minimum port area between 80 and 100 percent of full nominal pipe area. All exposed nuts, bolts, springs, washers, etc. shall be 316 stainless steel. Resilient plug facings shall be of Hycar or Neoprene.

E. Plug valves shall be furnished with permanently lubricated stainless steel or oil-impregnated bronze upper and lower plug stem bushings. These bearings shall comply with current AWWA Standards.

17.08 VALVE ACTUATORS

17.08.01 GENERAL

A. All valve actuators shall conform to Section 3.8 of the AWWA Standard Specification and shall be either manual or motor operated.

B. Actuators shall be capable of seating and unseating the disc against the full design pressure and velocity, as specified for each class, into a dry system downstream, and shall transmit a minimum torque to the valve. Actuators shall be rigidly attached to the valve body.

C. Butterfly valve actuators shall conform to the requirements of Section 3.8 of the AWWA Standard specifications for Rubber Seated Butterfly Valves, Designated C504, insofar as applicable and as herein specified.

17.08.02 MANUAL ACTUATORS

A. Manual actuators shall have permanently lubricated, totally enclosed gearing with handwheel and gear ratio sized on the basis of actual line pressure and velocities. Actuators shall be equipped with handwheel, position indicator, and mechanical stop-limiting locking devices to prevent over travel of the disc in the open and closed positions. They shall turn counter-clockwise to open valves. Manual actuators shall be of the traveling nut, self-locking type and shall be designed to hold the valve in any intermediate position between fully open and fully closed without creeping or fluttering. Actuators shall be fully enclosed and designed to produce the specified torque with a maximum pull of 80 pounds on the handwheel or chainwheel. Actuator components shall withstand an input of 450 foot pounds for 30-inch and smaller and 300 foot pounds for larger than 30-inch size valves at extreme actuator positions without damage. Valves located above grade shall have handwheel and position indicator, and valves located below grade shall be equipped with a 2-inch square AWWA operating nut located at ground level and cast-iron extension type valve box. Valve actuators shall conform to AWWA C504, latest revision.

17.08.03 MOTOR ACTUATORS (MODULATING)

A. The motor actuated valve controller shall include the motor, actuator unit gearing,

limit switch gearing, limit switches, position transmitter which shall transmit a 4-20 mA DC signal, control power transformer, electronic controller which will position the valve based on a remote 4-20 milliamp signal, torque switches, bored and key-wayed drive sleeve for non-rising stem valves, declutch lever and auxiliary handwheel as a self-contained unit.

B. The motor shall be specifically designed for valve actuator service using 480-volt, 60 Hertz, three phase power as shown, on the electrical drawings. The motor shall be sized to provide an output torque and shall be the totally enclosed, non-ventilated type. The power gearing shall consist of helical gears fabricated from heat treated alloy steel forming the first stage of reduction. The second reduction stage shall be a single stage worm gear. The worm shall be of alloy steel with carburized threads hardened and ground for high efficiency. The worm gear shall be of high tensile strength bronze with hobbed teeth. All power gearing shall be grease lubricated. Ball or roller bearings shall be used throughout. Preference will be given to units having a minimum number of gears and moving parts. Spur gear reduction shall be provided as required.

C. Limit switches and gearing shall be an integral part of the valve control. The limit switch gearing shall be made of bronze and shall be grease lubricated, intermittent type and totally enclosed to prevent dirt and foreign matter from entering the gear train. Limit switches shall be of the adjustable type capable of being adjusted to trip at any point between fully opened valve and fully closed valve.

D. The speed of the actuator shall be the responsibility of the system supplier with regard to hydraulic requirements and response compatibility with other components within the control loop. Each valve controller shall be provided with a minimum of two rotor type gear limit switches, one for opening and one for closing. The rotor type gear limit switch shall have two normally open and two normally closed contacts per rotor. Gear limit switches must be geared to the driving mechanism and in step at all times whether in motor or manual operation. Provision shall be made for two additional rotors as described above, each to have two normally open and two normally closed contacts. Each valve controller shall be equipped with a double torque switch. The torque switch shall be adjustable and will be responsive to load encountered in either direction of travel. It shall operate during the complete cycle without auxiliary relays or devices to protect the valve, should excessive load be met by obstructions in either direction of travel. The torque switch shall be provided with double-pole contacts.

E. A permanently mounted handwheel shall be provided for manual operation. The handwheel shall not rotate during electric operations but must be responsive to manual operation at all times except when being electrically operated. The motor shall not rotate during hand operation nor shall a fused motor prevent manual operation. When in manual operating position, the unit will remain in this position until motor is energized at which time the valve operator will automatically return to electric operation and shall remain in motor position until handwheel operation

is desired. This movement from motor operation to handwheel operation shall be accomplished by a positive declutching lever which will disengage the motor and motor gearing mechanically, but not electrically. Hand operation must be reasonably fast. It shall be impossible to place the unit in manual operation when the motor is running. The gear limit switches and torque switches shall be housed in a single easily accessible compartment integral with the power compartment of the valve control. All wiring shall be accessible through this compartment. Stepping motor drives will not be acceptable.

F. The motor with its control module must be capable of continuously modulating over its entire range without interruption by heat protection devices. The system, including the operator and control module must be able to function, without override protection of any kind, down to zero dead zone.

G. All units shall have strip heaters in both the motor and limit switch compartments.

H. The actuator shall be equipped with open-stop-close push buttons, an auto-manual selector switch, and indicating lights, all mounted on the actuator or on a separate locally mounted power control station.

I. The electronics for the electric operator shall be protected against temporary submergence.

J. Actuators shall be Limitorque L120 with Modutronic Control System containing a position transmitter with a 4-20MA output signal or equal.

17.08.04 MOTOR ACTUATORS (OPEN-CLOSE)

A. The electronic motor-driven valve actuator shall include the motor, actuator gearing, limit switch gearing, limit switches, torque switches, fully machined drive sleeve, declutch lever, and auxiliary handwheel as a self-contained unit.

B. The motor shall be specifically designed for valve actuator service and shall be of high torque totally enclosed, nonventilated construction, with motor leads brought into the limit switch compartment without having external piping or conduit box.

a) The motor shall be of sufficient size to open or close the valve against maximum differential pressure when voltage to motor terminals is 10% above or below nominal voltage.
b) The motor shall be prelubricated and all bearings shall be of the anti-friction type.

C. The power gearing shall consist of helical gears fabricated from heat treated steel and worm gearing. The worm shall be carburized and hardened alloy steel with the threads ground after heat treating. The worm gear shall be of alloy bronze accurately cut with a hobbing machine. All power gearing shall be grease lubricated. Ball or roller bearings shall be used throughout.

D. Limit switches and gearing shall be an integral part of the valve actuator. The switches shall be of the adjustable rotor type capable of being adjusted to trip at any point between fully opened valve and fully closed valve. Each valve controller shall be provided with a minimum of two rotor type gear limit switches, one for opening and one for closing (influent valves require additional contacts to allow stopping at an intermediate position). The rotor type gear limit switch shall have two normally open and two normally closed contacts per toro. Additional switches shall be provided if shown on the control and/or instrumentation diagrams. Limit switches shall be geared to the driving mechanism and in step at all times whether in motor or manual operation. Each valve actuator shall be equipped with a double torque switch. The torque switch shall be adjustable and will be responsive to load encountered in either direction of travel. It shall operate during the complete cycle without auxiliary relays or devices to protect the valve should excessive load be met by obstructions in either direction of travel. Travel and thrusts shall be independent of wear in valve disc or seat rings.

E. A permanently mounted handwheel shall be provided for manual operation. The handwheel shall not rotate during electric operation except when being electrically operated. The motor shall not rotate during hand operation, nor shall a fused motor prevent manual operation. When in manual operating position, the unit will remain in this position until motor is energized at which time the valve actuator will automatically return to electric operation and shall remain in motor position until handwheel operation is desired. Movement from motor operation to handwheel operation shall be accomplished by a positive declutching lever which will disengage the motor and motor gearing mechanically, but not electrically. Hand operation must be reasonably fast. It shall be impossible to place the unit in manual operation when the motor is running.

F. Valve actuators shall be equipped with an integral reversing controller and three phase overload relays, Open-Stop-Close push buttons, local-remote-manual selector switch, control circuit transformer, three-phase thermal overload relays and two pilot lights in a NEMA 4X enclosure. In addition to the above, a close coupled air circuit breaker or disconnect switch shall be mounted and wired to the valve input power terminals for the purpose of disconnecting all underground phase conductors.

G. The valve actuator shall be capable of being controlled locally or remotely via a selector switch integral with the actuator. In addition, an auxiliary dry contact shall be provided for remote position feedback.

H. Valve A.C. motors shall be designed for operation on a 480 volt, 3-phase service. Valve control circuit shall operate from a fuse protected 120-volt power supply.

I. Motor operators shall be as manufactured by Limitorque Corporation, Type L120 or approved equal.

17.09 AIR RELEASE VALVES

The air release valves for use in water or force mains shall be installed as shown on the Contract Drawings. The valves shall have a 316 stainless steel body and cover, 316 stainless steel float, plug, seat ring, and internal mechanism, bronze water diffuser, Buna-N or Viton seat, and 316 stainless steel trim and hardware. The fittings shall be threaded. Back flushing attachments shall be included. The air release valves shall be Figure 942 or 942F as manufactured by VAG/GA Industries or approved equal.

17.10 VALVE BOXES

Valve Boxes shall conform to the following:

A. Buried valves shall have cast-iron three-piece valve boxes or HDPE adjustable valve boxes. Cast iron valve boxes shall be provided with suitable heavy bonnets and shall extend to such elevation at or slightly above the finished grade surface as directed by the City. The barrel shall be two-piece, screw type, having a 5 1/4-inch shaft. The upper section shall have a flange at the bottom with sufficient bearing area to prevent settling and shall be complete with cast iron covers. Covers shall have WATER, SEWER, or RECLAIM, as applicable, cast into the top. Lids will be painted “safety” blue for potable, purple for reclaimed, and green for sanitary sewer.

B. All valves shall have actuating nuts extended to within four (4) feet of the top of the valve box. All valve extensions will have a centering guide plate two (2) inches maximum below the actuating nut. The valve extension shall be fastened to the existing nut with a set screw. Valve boxes shall be provided with a concrete base and a valve nameplate engraved with lettering 1/8-inch deep as shown on the Contract Drawings.

C. HDPE adjustable valve boxes shall be one complete assembled unit composed of the valve box and extension stem. All moving parts of the extension stem shall be enclosed in a housing to prevent contact with the soil. Valve box assembly shall be adjustable to accommodate variable trench depths.

D. The entire assembly shall be made of heavy wall high density polyethylene. All exterior components shall be joined with 316 stainless steel screws. The valve box top section shall be adaptable to fit inside a valve box upper section.

E. The stem assembly shall be of a telescoping design that allows for variable adjustment length. The stem material shall be of plated steel square tubing. The stem assembly shall have a built-in device that keeps the stem assembly from disengaging at its fully extended length. The extension stem must be torque tested to 1000 foot pounds. Covers shall have WATER, SEWER or RECLAIMED clearly and permanently impressed into the top surface.

17.11 CORPORATION COCKS

Corporation cocks for connections to cast-iron, ductile iron or steel piping shall be all brass or bronze suitable for 180 psi operating pressure and similar to Mueller Co. H-10046 or approved

equal by Clow Corp. and shall be of sizes required and/or noted on the Contract Drawings.

17.12 FLANGE ADAPTER COUPLINGS

Flange adapter couplings shall be of the size and pressure rating required for each installation and shall be suitable for use on either cast iron or ductile iron pipe. They shall be similar or approved equal to Dresser Company, Style 128. All couplings shall have a sufficient number of factory installed anchor studs to meet or exceed a minimum test pressure rating of 230 psi minimum.

17.13 FLEXIBLE COUPLINGS

A. Flexible couplings shall be either the split type or the sleeve type as shown on the Contract Drawings.

B. Split type coupling shall be used with all interior piping and with exterior piping noted on the Contract Drawings. The couplings shall be mechanical type for radius groove piping. The couplings shall mechanically engage and lock grooved pipe ends in a positive couple and allow for angular deflection and contracting and expansion.

C. Couplings shall consist of malleable iron, ASTM Specification A47, Grade 32510 housing clamps in two or more parts, a single chlorinated butyl composition sealing gasket with a "C" shaped cross-section and internal sealing lips projecting diagonally inward, and two or more oval track head type bolts with hexagonal heavy nuts conforming to ASTM Specification A 183 and A194 to assemble the housing clamps. Bolts and nuts shall be316 stainless steel.

D. Victualic type couplings and fittings may be used in lieu of flanged joints. Pipes shall be radius grooved as specified for use with the Victaulic couplings. Flanged adapter connections at fittings, valves, and equipment shall be Victaulic Vic Flange Style 741, equal by Gustin-Bacon Group, Division of Certain-Teed Products, Kansas City, Kansas, or approved equal.

E. Sleeve type couplings shall be used with all buried piping. The couplings shall be of steel and shall be Dresser Style 38 or 40, as shown on the Contract Drawings, or equal. The coupling shall be provided with 316 stainless steel bolts and nuts unless indicated otherwise.

F. All couplings shall be furnished with the pipe stop removed.

G. Couplings shall be provided with gaskets of a composition suitable for exposure to the liquid within the pipe.

H. If the Contractor decides to use victaulic couplings in lieu of flanged joints, he shall be responsible for supplying supports for the joints.

17.14 HOSE BIBS

Hose bibs shall be 3/4-inch or 1-inch brass, polished chromium plated brass, with vacuum breaker as noted on the Contract Drawings.

17.15 CHECK VALVES

A. Check valves for cast iron and ductile iron pipe lines shall be swing type and shall meet the material requirements of AWWA Specification C508. The valves shall be iron body, bronze mounted, single disc, 175 psi working water pressure and nonshock. Valves shall be as manufactured by Mueller, Clow, Kennedy, or M&H. Valves 8-inch and larger shall be air cushioned to reduce valve slam.

B. When there is no flow through the line, the disc shall hang lightly against its seat in practically a vertical position. When open, the disc shall swing clear of the waterway.

C. Check valves shall have bronze seat and body rings, extended bronze or 316 stainless steel hinge pins and 316 stainless steel nuts on the bolts of bolted covers. The interior and exterior of the valve body shall have a factory applied fusion bonded or 10 mil 2-part epoxy coating (Protecto 401 or approved equal).

D. Valves shall be so constructed that disc and body seat may easily be removed and replaced without removing the valve from the line. Valves shall be fitted with an extended hinge arm with outside lever and weight. The hinge arm and weight, along with hardware, shall be suitable for use in a corrosive environment.

17.16 HYDRANTS

Hydrants shall be provided and installed as required by Pinellas County Utility Specifications.

17.17 TAPPING SLEEVES AND TAPPING VALVES

Tapping valves shall meet the requirement of AWWA C500. The valves shall be flanged, shall be mechanical joint outlet with non-rising stem, designed for vertical burial and shall open left or counterclockwise. Stuffing boxes shall be the "O-ring" type. Operating nut shall be AWWA Standard 2-inch square for valves 2-inch and up. The valves shall be provided with an overload seat to permit the use of full size cutters. Gaskets shall cover the entire area of flange surfaces and shall be supplied with EPDM wedges up to 30-inch diameter.

Tapping sleeves and saddles shall seal to the pipe by the use of a confined "O" ring gasket and shall be able to withstand a pressure test of 180 psi for water lines or 150 psi for sewer force mains for one hour with no leakage in accordance with AWWA C110, latest edition. A 316 stainless steel 3/4-inch NPT test plug shall be provided for pressure testing. All hardware joining the two halves shall be 316 stainless steel and shall be included with the sleeve or saddle. Tapping sleeves and saddle straps shall be made of 316 stainless steel.

17.18 INSTALLATION

A. All valves and appurtenances shall be installed in the location shown, true to alignment and rigidly supported. Any damage occurring to the above items before they are installed shall be repaired to the satisfaction of the City.

B. After installation, all valves and appurtenances shall be tested at least two hours at the working pressure corresponding to the class of pipe, unless a different test pressure is specified. If any joint proves to be defective, it shall be repaired to the satisfaction of the City.

C. Install all floor boxes, brackets, extension rods, guides, the various types of operators and appurtenances as shown on the Contract Drawings that are in masonry floors or walls, and install concrete inserts for hangers and supports as soon as forms are erected and before concrete is poured. Before setting these items, the Contractor shall check all Contract Documents which have a direct bearing on their location and he shall be responsible for the proper location of these valves and appurtenances during the construction of the structures.

D. Pipe for use with flexible couplings shall have plain ends as specified in the respective pipe sections.

E. Flanged joints shall be made with 316 stainless steel bolts, nuts and washers. Mechanical joints shall be made with 316 stainless steel bolts and nuts. All exposed bolts shall be painted the same color as the pipe. All buried bolts and nuts shall be heavily coated with two (2) coats of bituminous paint comparable to Inertol No. 66 Special Heavy.

F. Prior to assembly of split couplings, the grooves as well as other parts shall be thoroughly cleaned. The ends of the pipes and outside of the gaskets shall be moderately coated with petroleum jelly, cup grease, soft soap or graphite paste, and the gasket shall be slipped over one pipe end. After the other pipe has been brought to the correct position, the gasket shall be centered properly over the pipe ends with the lips against the pipes. The housing sections then shall be placed. After the bolts have been inserted, the nuts shall be tightened until the housing sections are firmly in contact, metal-to-metal, without excessive bolt tension.

G. Prior to the installation of sleeve-type couplings, the pipe ends shall be cleaned thoroughly for a distance of 8-inch. Soapy water may be used as a gasket lubricant. A follower and gasket, in that order, shall be slipped over each pipe to a distance of 6-inches from the end.

H. Valve boxes with concrete bases shall be installed as shown on the Contract Drawings. Mechanical joints shall be made in the standard manner. Valve stems shall be vertical in all cases. Place cast iron box over each stem with base bearing on compacted fill and the top flush with final grade. Boxes shall have sufficient bracing to maintain alignment during backfilling. Knobs on cover shall be parallel to pipe. Remove any sand or undesirable fill from valve box.

17.19 SHOP PAINTING

Ferrous surfaces of valves and appurtenances shall receive a coating of rust-inhibitive primer. All pipe connection openings shall be capped to prevent the entry of foreign matter prior to installation.

17.20 FIELD PAINTING

All metal valves and appurtenances specified herein and exposed to view shall be painted according to the Specifications. All above ground potable water main valves shall be painted safety blue.

17.21 INSPECTION AND TESTING

Completed pipe shall be subjected to hydrostatic pressure test for two hours at 180 psi for water and 150 psi for sewer force mains. All leaks shall be repaired and lines retested as approved by the City. Prior to testing, the pipelines shall be supported in an approved manner to prevent movement during tests.

END OF SECTION

SECTION 25 – PUMP STATION CONTROLS

25.01 SCOPE OF WORK

A. Furnish all labor, materials, equipment and incidentals required for a complete electrical system as hereinafter specified and shown on the Contract Drawings.

25.02 SERVICE AND METERING

A. Permanent electrical service and metering will be provided at each Pump Station. Coordinate all work required with Duke Energy.

25.03 CODES

A. All material and installation shall be in accordance with the latest edition of the National Electrical Code (N.E.C.), and NFPA 70 code articles that are applicable to the minimum electrical installation requirements for sewer lift stations.

25.04 GENERAL

A. The materials used in all systems shall be new, unused and as hereinafter specified. All materials where not specified shall be of the very best of their respective kinds. Samples of materials or Manufacturer's specifications shall be submitted for review and acceptance as required by the Engineer.

B. Materials and equipment used shall be Underwriters Laboratories, Inc. listed and conform with applicable standards of NEMA and ANSI.

C. Electrical equipment shall, at all times during construction, be adequately protected against mechanical injury or damage by water. Electrical equipment shall not be stored out-of-doors. Electrical equipment shall be stored in dry permanent shelters. If any apparatus has been damaged, such damage shall be repaired by the CONTRACTOR at his expense. If any apparatus has been subject to possible injury by water, it shall be thoroughly dried out and put through such special tests as directed by the Engineer, at the cost and expense of the CONTRACTOR, or shall be replaced by the CONTRACTOR at his own expense.

25.05 MISCELLANEOUS EQUIPMENT

A. Boxes and Fittings:

1. NEMA 4X boxes shall be used outdoors or in "wet" locations. Construction shall be 316 stainless steel.

2. Conduit hubs shall be used for all outdoor conduit terminations and shall be as manufactured by Meyers Electric Products, Inc., Raco Div., Appleton Electric Co., or approved equal.

3. Conduit sealing bushings shall be Coruse Hinds type EYS or approved equal.

4. All panels shall be protected from internal corrosion by the use of corrosion – inhibiting vapor capsules, Northern Instruments Model Zerust VC, Hoffman Model A-HCI, or equal.

25.06 PUMP CONTROL SYSTEM

A. PANEL CONSTRUCTION:

1. The electrical control equipment shall be mounted within a NEMA Type 4X, dead front enclosure, constructed of not less than #14 gauge stainless steel (316 gauge). The enclosure shall be equipped with an inner aluminum door and shall incorporate a removable back panel on which control components shall be mounted. Back panel shall be secured to enclosure with collar studs. Outer panel door shall be equipped with door stop. Panel shall have lockable, 3-point latching system.

B. PUMP CONTROL CABINET COMPONENTS

1. Enclosure: Enclosure shall be NEMA 4X by Hoffman or approved equivalent with a heavy-duty padlock hasp. Enclosure shall be 316 Stainless Steel.

2. Inner Safety Door: Panel shall include one aluminum inner safety door, 12 gauge nominal thickness (minimum) with 3/4-inch, 90 degree break bend on all edges for rigidity; full length aluminum hinge; positive twist lock handle; safety latch to keep door open during maintenance.

3. Provide and install 120V LED cabinet light, Hoffman LEDA1S35. Provide custom mounting brackets as required. Provide Hoffman connector kit LEDA20C and tie to limit switch installed in panel.

C. PUMP STATION CONTROL/MONITORING EQUIPMENT

1. The Lift Stations shall be monitored and controlled via a SCADA Control Cabinet. This cabinet shall be provided, installed and programmed by others. The CONTRACTOR shall be responsible for providing the conduit and conductors required for 120V AC circuits, 24V DC circuits and 4-20mA signals as indicated on the Contract Drawings. The CONTRACTOR shall coordinate all work, terminations and other details with the SCADA Control Cabinet provider.

D SURGE PROTECTION DEVICE

1. A Surge Protection Device (SPD) meeting the requirements of ANSI Standard C-62.41 (latest revision) shall be provided.

2. The Surge Protection Device (SPD) shall be 120/240V, 3Ø, 4-wire. ASCO model # 430240HP10ACSJ10.

F. CONTROL RELAYS

1. Control Relays: All relays shall meet the following:

   a. Compact, general-purpose, plug-in type.

   b. Socket mounted.

   c. Contacts rated for not less than 10 amperes at 120V.

   d. Square-D Class 8501, Type R, miniature plug-in with relay base. Poles and coil voltages vary, refer to contract drawings.

F. PHASE MONITOR RELAY

1. An integral 240 VAC three-phase monitor shall be provided in the pump control cabinet. The phase monitor shall detect loss of phase, phase reversal, low phase and high phase faults. All phase monitor adjustments shall be adjustable. Phase monitor relay shall be Diversified Electronics cat# SLA-230-ALE.

G. CIRCUIT BREAKERS

1. Main and Motor Circuit Breakers: The panel shall include main and motor circuit breakers sized as shown. The breakers shall be mounted on the subpanel with handle through the inner door. The main and motor circuit breakers shall be products of Square-D, HGL or HJL as indicated.

H. MOTOR STARTERS

1. Pump starters shall consist of across-the-line motor starters or Variable Frequency Drives (VFD's).

2. Across-the-line motor starters shall be provided with remotely resettable and adjustable electronic overload relays.

3. Variable Frequency Drives shall be Yaskawa IQPump1000 series or approved equal.

I. ELECTRICAL WIRING

1. Panel (or site) lighting, receptacles, heaters, controls, telemetry and fans on separate branch circuits.

2. Branch circuit breakers shall be Square-D FAL12015 and FAL12020 as applicable.

i. Power wiring shall be 600 volt, type THWN stranded copper, No. 12 AWG size, for 120V service.

ii. Discrete 24V DC signal wiring shall be 600-volt type THWN stranded copper, sized for the current carried, but not smaller than No. 14 AWG.

iii. Analog signal wiring shall be stranded copper in twisted shield pairs, no smaller than No. 16 AWG, Belden 8719.

iv. Panel wiring shall be routed within 1” x 1” panduits.

v. Hinge wiring shall be secured at each end with the bend portion protected by a plastic sleeve.

vi. Analog or DC wiring shall be separated from any AC power or control wiring by at least six inches.

vii. Each wire shall be uniquely identified using plastic, snap-on numbered tags.

viii. Terminal blocks shall be provided for all field wiring entering the panel. The greater of 8 or 15% spare terminal blocks shall be provided. Terminal blocks shall be Allen-Bradley 1492-W10.

viii. No more than one wire per screw and yoke termination.

J. PANEL MOUNTED DEVICES

1. 3-Position Selector Switches. Units shall meet the following:

a. Heavy-duty, oil-tight, industrial type push buttons rated for NEMA 4X service.

b. Contacts rated for 120-volt ac service at 10 amperes continuous.

c. Number of positions and contact arrangements as required.

d. Factory-engraved legend plate indicating function.

e. Panel mounting accommodating panel thickness between 1/16 to ¼ inch.

f. Operator: black flush head.

g. 3-position, maintained, pump hand/off/auto switch. Square-D Class 9001, KS43FB with contacts as required.

2. Duplex receptacles shall be Ground Fault Interrupting (GFI) type, Hubbell model number GFR5352IA or equal.

3. Elapsed time meter. Cramer 635G.

4. MINI CAS II Unit:

a. MINI CAS II supervisory relay to be provided by pump manufacturer.

5. Alarm System :

a. The pump control cabinet shall include a vapor-proof red light mounted on the exterior of the cabinet as shown on the Contract Drawings for alarm visual indication.

6. Ventilation system:

a. Fans, exhaust grills, filter, etc. shall be as specified on the Contract Drawings.

K. SPARES AND EXPENDABLES

1. Provide the following spare parts:

a. Five (5) spare relays of each type provided.
b. Provide the following expendables:

i. Two-year supply of corrosion inhibitor capsules

ii. Six (6) spare fuses.

L. Operating Controls and Instruments:

1. All operating controls and instruments shall be securely mounted on the control compartment door. All controls and instruments shall be clearly labeled to indicate function.

M. Miscellaneous Equipment:

1. All panels shall be protected from internal corrosion by the use of corrosion – inhibiting vapor capsules, Northern Instruments Model Zerust VC, Hoffman Model A-HCI, or equal.

N. Installation:

1. Unless otherwise noted on the Contract Drawings, top of cabinets shall be mounted six feet above grade, properly aligned and adequately supported independently of the connecting raceways.

2. All wiring in the control panel shall be neatly formed, grouped, and identified to provide a neat and orderly appearance.

3. All nameplates shall be properly secured.

25.07 RADAR LEVEL TRANSDUCER

A. The level sensor for monitoring the sewage level in the wet well shall consist of a pulsed radar level sensor. The cable shall be connected directly to the signal input terminals in the SCADA Control Cabinet with no intervening junction box or calibration device required. The device shall require a 10-30 VDC low voltage power supply. The output shall be a standard 4-20 MADC control signal, factory set proportional to the selected fixed range of the transducer.

B. The radar level sensor shall be E+H FMR10 with Flooding Protection Tube accessory.

25.08 FLOAT SWITCHES

A. Levels shall be sensed by polypropylene weighted floats. The floats shall be heavy-duty type, with hermitically sealed non-mercury switch inside each float. Weights shall be 20 ounces minimum. The floats shall be secured at the top of the wetwell via a stainless steel wall mount bracket designed specifically for float installation.

25.09 CONDUIT INSTALLATION

A. Where conduits enter or leave all outlet boxes, cabinets safety switches, tap boxes, motor controllers, etc., threaded hubs shall be used. Bushings 1-inch and larger shall be of an approved insulated type. Unless otherwise indicated, conduit 2-inches shall be supported at intervals not exceeding ten (10) feet.

B. During construction, all installed raceways shall be temporarily plugged or otherwise protected from the entrance of moisture, dirt, trash, plaster, moisture, etc., through neglect of the CONTRACTOR to so protect them, shall be replaced by the CONTRACTOR without additional expense to the Owner. No kinked, clogged or deformed raceways will be permitted on the job. Raceways shall be cut to proper length so that ends will fit accurately in the outlets. Where raceways cross building expansion joints, a suitable raceway expansion fitting shall be used.

C. Size of raceway shall not be less than NEC requirements, but in no case shall be less than indicated on the Contract Drawings. Combining of circuits, other than detailed, will not be permitted. The CONTRACTOR shall install larger size raceways than detailed where there is excessive length of unbroken run or excessive number of bends.

D. Bends in metallic raceways shall be made while "cold" and in no case shall the raceways be heated. Raceways shall not be bent through more than 90º. The radius of bends shall not be less than six (6) times the internal diameter of the raceway. Not more than four (4) (equivalent 90º) bends will be permitted between outlets, the bends at the outlets being counted.

E. Raceways shall be properly aligned, grouped and supported. Exposed raceways shall be installed at the right angles to or parallel to the principal structural members. Concealed raceways, unless otherwise indicated, may take the most direct route between outlets. Raceways shall be firmly held in place. Raceways shall run to avoid trapping wherever possible. Where areas are indicated for future openings, foundations, etc., all raceways shall be run around such areas. The CONTRACTOR shall provide necessary inserts in poured concrete areas and shall furnish and install all necessary sleeves through walls, floors and roofs for passage of raceways. Sleeves through roofs and/or exterior walls shall be properly sealed by the CONTRACTOR against entrance of moisture, etc., into the building. Where necessary repairs to the building structure using material in no way inferior to that originally installed and using labor skilled in the trades involved.

25.10 CONDUCTORS

A. Splices, taps and attachments of fittings and lugs shall be electrically and mechanically secure. Approved solderless lugs and connectors shall be sued for all conductors with 2-bolt type being used for sized No. 4/0 and larger. There shall be plenty of slack cable in boxes, outlets and cabinets to ensure that there is no binding at the bushings. All lugs shall be of the correct sizes for the conductor in order to fit the conductor into a lug.

B. Splices or joints to other than lugs or terminals shall not be allowed.

25.11 GROUNDING

A. The entire electrical system shall be completely and effectively grounded as required by the NEC and as specified hereinafter.

B. All metallic raceways shall be mechanically and electrically secure at all joints and at all boxes, cabinets, fittings and equipment. Metallic raceways entering the motor control center control panels or other electrical boxes shall be grounded to the appropriate ground bus. All metallic raceways shall be electrically continuous throughout the entire conduit system. Bond wires shall be used in exterior concrete pull boxes.

25.12 SUPPORTS

A. The CONTRACTOR shall furnish and install all necessary supports for properly mounting all electrical equipment and raceways. Such supports shall be fabricated and installed in a neat and workmanlike manner, and care shall be taken that at no time shall any portion of the building structure be overloaded. Should the building structure sustain damage through carelessness or through failure of the CONTRACTOR to properly support and install the electrical equipment, the CONTRACTOR shall bear all costs involved in repairing or replacing such installation.

B. All supports exposed to the weather shall be stainless steel. Provide plastic caps on all unistrut ends.

25.13 TESTS AND CHECKS

A. The following minimum tests and checks shall be made prior to the termination of any field wiring.

1. Megger terminals and buses after disconnecting devices sensitive to megger voltage.

2. A 1,000V DC megger shall be used for these tests.

3. The first test shall be made with main circuit breaker closed and all remaining breakers open. A second test shall be made with all circuit breakers closed.

4. The test results shall be recorded and forwarded to the Engineer for his review. Minimum megger readings shall be 500 megohms in both tests.

B. The following shall be done before energizing any equipment or control panel.

1. Remove all current transformer shunts after completing the secondary circuit.

3. Vacuum clean all interior equipment.

25.14 SPARE PARTS

A. Spare parts shall be furnished to permit convenient and quick service restoration upon failure of a particular unit.

B. The spare parts shall be packed in a manner suitable for long-term storage and shall be adequately protected against corrosion, humidity, and temperature.

25.15 WARRANTY

A. Warranty - The SYSTEM SUPPLIER shall warrant all hardware and software provided under this contract against all defects in material and workmanship for a period of one year. The system supplier shall warrant the telemetry software to be free of defects for as long as it is operational in the city. The SYSTEM SUPPLIER shall also provide free updates to this software for the life of the system. The function modules utilized in the remote terminal units shall carry an additional two-year return-to-factory warranty. The two-year return-to-factory warranty shall also cover damage due to lightning.

END OF SECTION

THIS PAGE INTENTIONALLY LEFT BLANK

SECTION 26 – ELECTRICAL

GENERAL

26.01 SCOPE OF WORK

A. Furnish all labor, materials, equipment and incidentals required for complete electrical system as hereinafter specified and shown on the Contract Drawings.

B. The work, apparatus and materials, which shall be furnished under these Specifications and accompanying Drawings, shall include all items listed hereinafter and/or shown on the Drawings. Certain equipment, which will require wiring thereto and/or complete installation, is indicated. All materials necessary for the complete installation shall be furnished and installed by the CONTRACTOR to provide complete power, lighting, instrumentation, wiring and control systems as indicated on the Drawings and/or as specified herein.

C. The CONTRACTOR shall furnish and install the necessary cables, protective devices, conductors, supports, raceways, exterior electrical system, etc., to serve lighting loads and miscellaneous electrical loads as indicated on the Drawings and/or as specified. The CONTRACTOR shall install any control panel provided under this or any other sections on the specifications.

D. The work shall include complete testing of all equipment and wiring at the completion of the work and making any minor connection changes or adjustments necessary for the proper functioning of the system and equipment. All workmanship shall be of the highest quality; sub-standard work will be rejected.

E. For process instrumentation furnish and install all conduit, wire and interconnections between primary elements, transmitters, local indicators and receivers.

F. It is the intent of these Specifications that the electrical system shall be suitable in every way for the service required. All material and all work, which may be reasonably implied as being incidental to the work of this Section, shall be furnished at no extra cost.

26.02 SERVICE AND METERING

A. Permanent electrical service and metering will be provided at each Pump Station. Coordinate all work required with Duke Energy.

26.03 CODES, INSPECTION AND FEES

A. All material and installation shall be in accordance with the 2014 edition of the National Electrical Code (N.E.C.), and NFPA 70 code articles that are applicable to the minimum electrical installation requirements for sewer lift stations.

B. Pay all fees required for permits and inspections.

26.04 TESTS

A. Test all systems and repair or replace all defective work. Make all necessary adjustments to the systems and instruct OWNER's personnel in the proper operation of the systems.

B. The following minimum tests and checks shall be made prior to the energizing of electrical equipment. Test shall be by the CONTRACTOR and a certified test report shall be submitted providing all test results and stating that the equipment meets and operates in accordance with the Manufacturer's and job specifications, and that equipment and installation conforms to all applicable Standards and Specifications:

1. Test all 600-volt wire insulation with a megohm meter after installation. Make tests at not less than 1000 volts. Submit a written test report of the results to the engineer.
2. Mechanical inspection of all circuit breakers to assure proper operation.

C. The Engineer shall be notified forty-eight (48) hours before tests are made to enable the Owner to have designated personnel present.

26.05 CUTTING AND PATCHING

A. All cutting and patching shall be done in a thoroughly workmanlike manner.

26.06 INTERPRETATION OF DRAWINGS

A. The Drawings are not intended to show exact locations of conduit runs.

B. All three-phase circuits shall be run in separate conduits unless otherwise shown on the Drawings.

C. Unless otherwise approved by the Engineer, conduit shown exposed shall be installed exposed; conduit shown concealed shall be installed concealed.

D. Where circuits are shown as "home-runs," all necessary fittings and boxes shall be provided for a complete raceway installation.

E. The CONTRACTOR shall harmonize the work of the different trades so that interferences between conduits, piping, equipment, architectural and structural work will be avoided. All necessary offsets shall be furnished so as to take up a minimum space and all such offsets, fittings, etc., required to accomplish this shall be furnished and installed by the CONTRACTOR without additional expense to the Owner. In case interference develops, the Owner's authorized representative is to decide which equipment, piping, etc., must be relocated, regardless of which was installed first.

F. The locations of equipment, fixtures, outlets, and similar devices shown on the Drawings are approximate only. Exact locations shall be as approved by the Engineer during

construction. Obtain in the field all information relevant to the placing of electrical work and in case of any interference with other work, proceed as directed by the Engineer and furnish all labor and materials necessary to complete the work in an approved manner.

G. Circuit layouts shown are not intended to show the number of fittings, or other installation details. Furnish all labor and materials necessary to install and place in satisfactory operation all power, lighting, and other electrical systems shown. Additional circuits shall be installed wherever needed to conform to the specific requirements of the equipment.

H. The ratings of motors and other electrically operated devices together with the size shown for their branch circuit conductors and conduits are approximate only and are indicative of the probable power requirements insofar as they can be determined in advance of the purchase of equipment.

I. All connections to equipment shall be made as shown, specified and directed and in accordance with the approved shop drawings, regardless of the number of conductors shown on the Electrical Drawings.

26.07 RECORD DRAWINGS

A. As the work progresses, legibly record all field changes on a set of project Contract Drawings. When the project is complete, furnish a complete set of reproducible "As-built" drawings for the Project Record Documents.

26.08 COMPONENT INTERCONNECTIONS

A. Component equipment furnished under this Specification will not be furnished as integrated systems.

B. Analyze all systems components and their shop drawings; identify all terminals and prepare drawings or wiring tables necessary for component interconnection.

26.09 SHOP DRAWINGS

A. As specified under other Sections, shop drawings shall be submitted for review and acceptance for all materials, equipment, apparatus, and other items as required by the Engineer.

B. Shop drawings shall be submitted for the following equipment:

1. Pump Control Cabinet
2. Disconnects
3. Circuit Breakers
4. Variable Frequency Drives
5. Surge Protection Device
6. Junction Boxes

7. Wire & cable
8. Conduit

C. The Manufacturer's name and product designation and catalog cutsheets shall be submitted for the following material:

1. Conduit
2. Boxes and fittings

D. Prior to submittal by the CONTRACTOR, all shop drawings shall be checked for accuracy and contract requirements. Shop drawings shall bear the date checked and shall be accompanied by a statement that the shop drawings have been examined for conformity to Specifications and Drawings. This statement shall also list all discrepancies with the Specifications and Drawings. Shop drawings not so checked and noted shall be returned.

E. The Engineer's check shall be only for conformance with the design concept of the project and compliance with the Specifications and Drawings. The responsibility of, or the necessity of, furnishing materials and workmanship required by the Specifications and Drawings, which may not be indicated on the shop drawings, is included under the work of this Section.

F. The responsibility for all dimensions to be confirmed and correlated at the job site and for coordination of this work with the work of all other trades is also included under the work of this Section.

G. No material shall be ordered or shop work started until the Engineer's review and acceptance of shop drawings has been given.

26.10 ELECTRICAL IDENTIFICATION

SUMMARY

A. Section Includes:

1. Nameplates.
2. Labels.
3. Wire markers.
4. Conduit markers.
5. Stencils.
6. Underground Warning Tape.
7. Lockout Devices.

NAMEPLATES

A. Product Description: Laminated three-layer plastic with engraved white letters on black background color.

B. Letter Size:
   1. 1/8 inch high letters for identifying individual equipment and loads.

   2. 1/4 inch high letters for identifying grouped equipment and loads.

C. Minimum nameplate thickness: 1/8 inch.

LABELS

D. Labels: Embossed adhesive tape, with 3/16 inch white letters on black background.

WIRE MARKERS

E. Description: Cloth tape, split sleeve, or tubing type wire markers.

F. Legend:
   1. Power and Lighting Circuits: Branch circuit or feeder number.

   2. Control Circuits: Control wire number as indicated on shop drawings.

CONDUIT AND RACEWAY MARKERS

G. Description: Stencils.

H. Color:
   1. Medium Voltage System: Black lettering on white background.

I. Legend:
   1. Medium Voltage System: HIGH VOLTAGE.

STENCILS

J. Stencils: With clean cut symbols and letters of following size:
   1. Up to 2 inches Outside Diameter of Raceway: 1/2 inch high letters.

   2. 2-1/2 to 6 inches Outside Diameter of Raceway: 1 inch high letters.

K. Stencil Paint: As specified in other sections of specifications, semi-gloss enamel, colors.

UNDERGROUND WARNING TAPE

L. Description: 6 inch wide plastic tape, colored red with suitable warning legend describing buried electrical lines.

LOCKOUT DEVICES

M. Lockout Hasps:

1. Anodized aluminum hasp with erasable label surface; size minimum 7-1/4 x 3 inches.

PREPARATION

N. Degrease and clean surfaces to receive adhesive for identification materials.

O. Prepare surfaces in accordance with Division 9 for stencil painting.

INSTALLATION

P. Install identifying devices after completion of painting.

Q. Nameplate Installation:

1. Install nameplate parallel to equipment lines.

2. Install nameplate for each electrical distribution and control equipment enclosure with corrosive-resistant mechanical fasteners, or adhesive.

3. Install nameplates for each control panel and major control components located outside panel with corrosive-resistant mechanical fasteners, or adhesive.

4. Secure nameplate to equipment front using screws or adhesive.

5. Secure nameplate to inside surface of door on recessed panelboard in finished locations.

6. Install nameplates for the following:

a. Pump Control Panel.

b. SCADA Control Cabinet.

c. Disconnect Switches.

Label Installation:

1. Install label parallel to equipment lines.

2. Install label for identification of individual control device stations, and wall switches where their purpose is not readily obvious.

3. Install labels for permanent adhesion and seal with clear lacquer.

Wire Marker Installation:

1. Install wire marker for each conductor at panelboard gutters, pull boxes, outlet and junction boxes, and each load connection.

2. Mark data cabling at each end. Install additional marking at accessible locations along the cable run.

3. Install labels at data outlets identifying patch panel and port designation.

Raceway Marker Installation:

1. Install raceway marker for each raceway longer than 6 feet.

2. Raceway Marker Spacing: 20 feet on center.

3. Raceway Painting: Identify conduit using field painting in accordance with Division 9.

Stencil Installation:

1. Apply stencil painting in accordance with Division 9.

Underground Warning Tape Installation:

1. Install underground warning tape along length of each underground conduit, raceway, or cable 12 inches below finished grade, directly above buried conduit, raceway, or cable.

26.11 RACEWAYS AND FITTINGS

GENERAL

SCOPE OF WORK

A. All aboveground, exterior conduit shall be rigid aluminum. All conduit installed in slabs or below grade shall be rigid non-metallic heavy wall conduit. Minimum conduit size in floor slabs, walls, or below grade shall be ¾-inch.

PRODUCTS

MATERIALS

A. Rigid Non-metallic Conduit and Fittings : Rigid non-metallic conduit and fittings of heavy wall polyvinyl chloride (PVC) meeting ASTM Specification D 1785, approved by UL for the specific purpose, may be used in locations not prohibited by the NEC Section 347-3. When equipment grounding is required by Article 250 of the NEC, a separate grounding conductor shall be installed in the conduit. Installation methods of rigid non-metallic conduit shall conform to Section 347-5 through 347-15 of the NEC. Supports shall be in accordance with Table 347-8.

B. Rigid Aluminum Conduit and Fittings : All electric aluminum conduit and fittings shall conform ANSI C80.5. Rigid aluminum conduit shall not be used for concealed work. The use of dissimilar metals shall be avoided throughout the system. Installation methods of metallic conduit shall be in accordance with Sections 348-4 through 348-13 of the NEC.

C. Flexible Non-Metallic Conduit: As indicated or necessary, equipment shall be connected with liquid-tight flexible non-metallic conduit of the size required for the conductors to the equipment. Liquid-tight flexible non-metallic conduit shall be UL, type UA. It shall be installed in such a manner that liquids tend to run off the surface and not drain toward the fittings. Sufficient slack shall be provided to reduce the effects of vibration. Where the fittings are brought into an enclosure with a knock-out, a gasket assembly consisting of an O-ring and retainer shall be installed. These fittings shall be nylon insulated-throat type. Conduit shall be galvanized, PVC covered and shall be constructed to provide a continuous metallic bond. It shall be equal to that manufactured by Appleton “Sealtite”.

EXECUTION

INSTALLATION:

A. Conduit shall be concealed unless otherwise shown. Exposed conduit shall run parallel or perpendicular to building planes. Concealed conduits shall be run in a direct line with long sweep bends and offsets. Conduit shall be continuous and installed in such a manner that the system shall be electrically continuous throughout. Conduit ends shall be capped during construction. The ends of all conduits shall be carefully reamed free from burrs after threading and before installation. All cuts shall be made square. All joints shall be made up tight. Care shall be taken to see that all light and power conduit runs form a permanent and continuous ground connection point.

B. The Contractor shall permanently and effectively ground service neutral and all raceways, devices, and utilized equipment in accordance with the requirements of the NEC, and as shown or required. All grounding electrodes shall have rigid clamp jaws and be UL listed for the application. A separate ground wire shall be provided in all lighting and power raceways.

C. Conduit stubs shall be located to conform to location of connection boxes on motors and/or other equipment served. Traps in conduit runs shall be avoided. Device boxes in concrete shall be set true and packed as necessary to exclude concrete during placement.

D. Final connections from the end of the conduit run to equipment or controls for both interior and exterior work shall be made by means of liquid-tight flexible conduit. The length of these sections of flexible conduit shall not exceed 36 inches in length.

E. Conductors shall be installed in a workmanlike manner. Damage to insulation or a reduction of the wire size when pulled into the conduit shall be avoided.

F. All areas of the project are considered to be wet locations and construction within these areas shall be moisture and weather resistant. Work below grade, on grade, or beneath slabs shall be waterproof.

G. Electrical work shall not rest upon, be supported by or hung from ductwork, piping or equipment. Adequate supports shall be provided to assure that this is achieved.

H. Boxes, conduit, hangers, panels, etc., shall be fastened to steel by machine bolts and nuts, and by expansion bolts in concrete. Wood or composition plugs shall not be used.

I. Buried conduit shall be installed so as to assure a watertight system. Turns and bends shall be made using watertight fittings or field-made bends. Trenchwork for installation of conduits and equipment underground shall conform to applicable sections of these specifications. Locations for buried conduit shall be carefully plotted to avoid conflict with other installations. Unless otherwise noted, all buried electrical installations shall be installed at least 24-inches below finished grade.

J. Where installations pass through walls, slabs, or other structures, all cutting shall be accomplished without damage to the structure. Boring and cutting shall be done with proper equipment and without delivering excessive vibration or shock to the structure.

26.12 WIRES AND CABLES

GENERAL

SCOPE

A. This section includes the furnishing, installation, and connection of all low voltage and power wiring. This shall include all wires and cables utilized for controls. Conductors specified for low voltage controls shall be coordinated with and approved by equipment manufacturers.

B. Control wiring specified herein shall be installed and connected by the Electrical Contractor to perform the functions specified in other sections of these specifications.

C. REFERENCE STANDARDS:

The following specifications and standards, except as hereinafter modified, are incorporated herein by reference and form a part of this specification to the extent indicated by the references thereto. Except where a specific date is given, the issue in effect (including amendments, addenda, revisions, supplements, and errata) on the date of Invitation for Bids shall be applicable. In text such specifications and standards are referred to by basic designation only.

1. Federal Specifications (Fed. Spec.)
   J-C-30A(1) - Cable and Wire Electrical (Power, Fixed Installation)
   HH-I-595C - Insulation Tape, Electrical, Pressure Sensitive Adhesive, Plastic

2. National Fire Protection Association (NFPA) Publications:
   No. 70 - National Electrical Code (NEC) WIRES AND CABLES

3. Underwriter's Laboratories, Inc (UL) Publications:
   No. 83 - Thermoplastic – Insulated Wires
   No. 493 - Thermoplastic – Insulated Underground Feeder and Branch Circuit Cables
   No. 486 - Wire Connectors and Soldering Lugs

PRODUCTS

MATERIALS

A. Conductors for 4-20mA signals and where twisted, shielded conductors are shown on the Contract Drawings shall have :

1. 2 conductor, #16 tinned copper conductors.

2. Polyethylene insulation material.

3. Aluminum foil-polyesther tape with shorting fold

4. Shall be Belden Part Number 8719 or equal as determined by the engineer.

B. Conductors for MiniCAS II sensor signals and where twisted, shielded conductors are shown on the Contract Drawings shall have :

1. 2 conductor, #16 tinned copper conductors.

2. Polyethylene insulation material.

3. Aluminum foil-polyesther tape with shorting fold

4. Shall be Belden Part Number 8719 or equal as determined by the engineer.

C. Power Conductors shall consist of annealed copper wire having a minimum of 98% conductivity and shall be sized and insulated or isolated in accordance with the NEC for the current and voltage of the individual circuit. All conductors, unless specifically noted, shall have type “THWN”, 75 degrees f, 600 Volt insulation.

D. Joints shall be made with mechanical connectors and insulated with two layers of Scotch No. 33 or Slipnot No. 3201 tape.

E. All splices for conductors #12 through #6 AWG solid or stranded shall be made with “Scotchlock” spring connectors or the pressure wire type. For wire sizes larger than #6, splices shall be made with “OZ” type “XW” or “XTP” as appropriate to the splice being installed. Equal fittings of Burndy and Penn Union may be used. Tape shall be equal to Scotch No. 33 or Slipnot NO. 3201 over splice and filler tape on splices shall be equal to “Scotchfill”.

F. Flexible cords and cables shall be of the size and number of conductors as indicated on Contract Drawings. Cords shall comply with the requirements of Article 400 of the NEC.

G. Contractor shall coordinate the requirements for flow meter signal converter cable with the respective equipment manufacturers.

EXECUTION

INSTALLATION

A. All conductors shall be coded throughout, using different colors for phases, white for neutral (white with other color stripe for neutral of a different voltage system) and green for ground. The same color code for a particular phase or part of a circuit shall be run with the same conductor throughout the job. Colors used for each voltage system shall be different. Conductors No. 8 AWG and larger may be black in color but shall be identified with colored tape in all outlet, junction or pull boxes and at the terminals of the equipment.

Phase	120/240V, 3PH, System
A	Black
B	Orange
C	Blue

Neutral	White
Ground	Green

B. All wires in cabinets, boxes, panels, pull and junction boxes shall be trained neatly and tied.

C. All wires and cables, larger than No. 12 AWG, shall be continuous from origin to destination without splices unless written permission is given by the ENGINEER.

D. Conductors shall be sized in accordance with NEC requirements. No conductor shall be smaller than No. 12 AWG, except control and signal circuit conductors which may be No. 14 AWG, unless otherwise specified on the Contract Drawings.

TERMINATIONS AND SPLICES

A. Power Conductors: Terminations shall be die type or set screw type pressure connectors as specified. Splices (where allowed) shall be die type compression connector and waterproof with heat shrink boot or epoxy filling.

B. Control Conductors: Termination on saddle-type terminals shall be wired directly with a maximum of two conductors per termination. Termination on screw type terminals shall be made with a maximum of two spade connectors. Splices (where allowed) shall be made with insulated compression type connectors. Heat shrink boots shall be utilized for all outdoor splices.

C. Instrumentation Signal Conductors: Terminations permitted shall be typical of control conductors. Splices are allowed at instrumentation terminal boxes only.

D. Except where otherwise approved by the Engineer no splices will be allowed in manholes, handholes or other below grade located boxes.

E. Splices shall not be made in control devices (i.e., pressure switches, flow switches, etc.), conduit bodies, etc.

26.13 MAIN DISCONNECT

GENERAL

SYSTEM DESCRIPTION

A. All disconnecting means shall meet the requirements of the NEC.

PRODUCTS

ACCESSORIES

A. Main Disconnect: Fused switch shall be heavy-duty type “HD”. The blades of switches shall be quick-make, quick-break operating type. All lugs the switch shall be equal to Burdy’s solderless quick lugs or shall be compression type. Switch shall be 3-pole and shall have fuse sizes as indicated on the Contract Drawings. Enclosure shall be NEMA 4X stainless steel. The switch shall conform to NEMA Standards and shall be UL listed. Switches shall be equal to General Electric, Square-D, or Cutler-Hammer.

B. Main disconnect shall have a solid neutral, ground lug and shall be listed for use as service entrance equipment.

EXECUTION

INSTALLATION

A. Install disconnect as recommended by the manufacturer, required by Code, and as shown on the Contract Drawings.

26.14 SUPPORTING DEVICES

GENERAL

WORK INCLUDED

A. Conduit supports.

B. Channel supports for equipment.

REFERENCE STANDARDS

A. National Electrical Code

PRODUCTS

CONDUIT SUPPORTS

A. Single Runs: Galvanized conduit straps or ring bolt type hangers with specialty spring clips. Plumbers perforated straps or wire will not be acceptable.

B. Multiple Runs: Conduit rack with 25 percent spare capacity.

C. Vertical Runs: Channel support with conduit fittings.

CHANNEL SUPPORTS

A. Stainless steel channel sections shall be rolled from AISI 1008 commercial grade steel and be in conformance with ASTM A 240.

B. The cross sectional width dimension of the channel shall be a minimum of 1-5/8-inch. The depth will be as required to satisfy the load requirements. Channel with 1-5/8-inch depth or greater shall be rolled from manufacturer's standard 12 gauge steel. Channel smaller than 1½-inch may be manufacturer's standard 14 gauge steel.

C. Attachment holes, when required, shall be factory punched on hole centers equal to the channel cross sectional width dimension and shall be a maximum of 9/16-inch in diameter.

D. Channel attachment nuts shall be designed to prelocate in the channel and provide a bearing surface on the turned down lips while making positive contact with the side walls of the channel.

E. Straps for the support of conduit shall be designed such that the attachment nut is captivated on the shoulder of the strap when tightened, and the attachment bolt shall allow tightening by either a screwdriver or wrench.

F. All nuts, bolts, straps, threaded rod and miscellaneous hardware shall be stainless steel.

G. When tested in accordance with ASTM B117-73 procedure, there shall be no sign of red rust after 1,000 hours of testing. Certified test results to support this must be submitted upon request.

ANCHOR METHODS

A. Hollow Masonary: Toggle bolts, spider type expansion anchors, or tapcons.

B. Solid Masonary: Lead expansion anchors, preset inserts, or tapcons.

C. Metal Surfaces: machine screws, bolts, welded studs, or beam type clamps on steel joints.

D. Wood Surfaces: Wood Screws

E. Concrete Surfaces: Self-drilling anchors, power-driven studs, expansion bolts, or tapcons.

F. See Contract Drawings for special mounting and installation.

EXECUTION

INSTALLATION

A. Layout to maintain headroom, neat mechanical appearance, and to support equipment loads required.

B. Verify exact mounting and installation requirements with the Owner's representative prior to installation.

26.15 GROUNDING

GENERAL

SCOPE OF WORK

A. Furnish and install a complete grounding system in strict accordance with Article 250 of the National Electrical Code and as hereinafter specified and shown on the Contract Drawings.

PRODUCTS

MATERIALS

A. Ground rods: Ground rods shall be Copperclad steel 3/4-inch x 20 foot. Ground rods shall be Copperweld or be an approved equal product.

EXECUTION

GENERAL

A. Grounding electrodes shall be driven as required. Where rock is encountered, grounding plates may be used in lieu of grounding rods.

B. All equipment enclosures, motor and transformer frames, conduits systems, cable armor, exposed structural steel and similar items shall be grounded.

C. Exposed connections shall be made by means of approved grounding clamps. Exposed connections between different metals shall be sealed with No-Oxide Paint Grade A or approved equal. All buried connections shall be made by welding process equal to Cadweld.

D. All underground conductors shall be laid slack and where exposed to mechanical injury shall be protected by pipes or other substantial guards. If guards are iron pipe or other magnetic material, conductors shall be electrically connected to both ends of the guard.

E. The Contractor shall exercise care to insure good ground continuity, in particular between the conduit system and equipment frames and enclosures. Where necessary, jumper wires shall be installed.

F. Provide grounding test wells where indicated on the Contract Drawings.

TESTS

A. The Contractor shall test the ground resistance of the system. All test equipment shall be

provided by the Contractor and approved by the Engineer. Dry season resistance of the system shall not exceed 2 ohms. If such resistance cannot be obtained with the system as shown, the Contractor shall provide additional grounding as directed by the Engineer, without additional payment. The Contractor shall submit all grounding system test results to the Engineer for review.

26.16 VARIABLE FREQUENCY DRIVES

SUMMARY

A. Section Includes: Requirements for providing, installing and testing the 240-volt variable frequency drives. Provide drives in individual free standing enclosures, as shown. Furnish harmonic studies as specified.

REFERENCES

A. Codes and standards referred to in this Section are:

1. NEMA ICS 1 - General Standards for Industrial Control and Systems
2. NEMA ICS 2 - Industrial Control and Systems Controllers, Contactors and Overload Relays Not More than 2000 Volts AC or 750 Volts DC.
3. NEMA ICS 3 - Industrial Control and Systems Factory Built Assemblies
4. NEMA ICS 7 - Industrial Control and Systems: Adjustable Speed Drives
5. NEMA ICS 7.1 - Safety Standards for Construction and Guide for Selection, Installation and Operation of Adjustable Speed Drive Systems
6. NEMA 250 - Enclosures for Electrical Equipment
7. NFPA 70 - National Electrical Code
8. IEEE 85 - Test Procedure for Airborne Sound Measurements on Rotating Electric Machinery
9. IEEE 519 - IEEE Recommended Practices and Requirements for Harmonic Control in Electrical Power Systems
10. UL 845 - Motor Control Centers

SYSTEM DESCRIPTION

A. Design Requirements:

1. Provide variable frequency drives to vary the speed of NEMA standard, 3-phase, 240-volt, induction motors and driven equipment by varying the frequency and voltage applied to the motors.

2. Provide variable frequency drives that fit in the space shown. Units exceeding the dimensions shown will not be acceptable.

3. Provide variable frequency drives that automatically restart when power is restored after a power outage. Provide control logic so the drive is allowed to restart when power is restored.

B. Rated Output Power: Provide adjustable frequency drives with an output that is at least 3 percent greater than the driven motor's full nameplate rating.

C. Torque Output: Provide variable torque or constant torque output drives as required by driven equipment.

D. 6-Pulse Drive Technology: Provide adjustable frequency drives serving motors 75 HP or smaller utilizing 6-pulse drive technology.

E. Performance Requirements: Provide adjustable frequency drives to meet the following requirements of IEEE 519:

1. Total harmonic distortion THD (Voltage): Maximum of five percent for general distribution systems as measured at the point of common coupling.

2. Total current harmonic distortion: Not to exceed the values in Table 10.3, Current Distortion Limits for General Distribution Systems (120 V through 69000 V) of IEEE-519 at the point of common coupling.

3. Capacitor traps for controlling harmonics that require tuning to the power system are not acceptable.

4. Operate at a minimum efficiency of 95 percent at rated load.

5. Operate from a 240-volt, 3-phase, 60-hertz supply with a voltage variation of plus 10-percent or minus 20-percent and a frequency variation of plus or minus 2-hertz.

6. Input power factor: Maintain a 95 percent minimum power factor over a 20 to 100 percent speed range.

7. Operate an induction motor as specified, including a high-efficiency, high-power factor, premium-duty motor, with no detriment to motor life.

8. ADJUST THE VFD CARRIER FREQUENCY TO STRIKE A COMPROMISE BETWEEN MOTOR NOISE AND INSULATION STRESS.

9. Operate under the following ambient conditions:

   a. Ambient Temperature: 0 to 50 degrees C
   b. Humidity: 0 to 95 percent

SUBMITTALS

A. General: Furnish all submittals, including the following, as specified in the Specific/General Provisions.

B. Product Data and Information: Furnish catalog data including rating and descriptive literature of all components and systems.

C. Shop Drawings: Furnish the following shop drawings customized for the project:

1. Bill of materials including manufacturers name and catalog number

2. Outline drawings showing dimensions, arrangement, elevations, identification of components and nameplate schedule for all units

3. Interconnection wiring diagrams

4. Individual schematic control diagrams for each unit

5. One line diagrams

6. Obtain and enter full performance data for all motors shown

7. Certification that the variable frequency drives are compatible with the motors and the equipment loads to be driven

D. Quality Control: Furnish test reports, certificates of inspection and manufacturer's instructions.

E. Operations and Maintenance Manuals: Furnish operations and maintenance manuals as specified in the Specific/General Provisions.

QUALITY ASSURANCE

A. Standards: Provide all variable frequency drives manufactured in accordance with referenced standards.

B. UL Label: Provide a UL Inc. Label or certification of listing by C.S.A. or other recognized testing organization for each adjustable frequency drive.

C. Codes: Manufacture and install each adjustable frequency drive in accordance with the NEC and local codes.

DELIVERY, STORAGE, AND HANDLING

A. General: Deliver, store and handle all products and materials as specified in the Specific/General Provisions.

B. Shipping and Packing: Rigidly brace and protect against weather, damage, and undue strain, all structures, equipment and materials.

C. Storage and Protection: Furnish clean storage facilities for all equipment delivered but not installed. Provide conditioned air for storage facilities in accordance with the equipment manufacturer's recommendations.

D. Spare Parts: Furnish spare parts at the same time as pertaining equipment. Deliver the spare parts to the City after completion of the work.

SPARE PARTS

A. General: Furnish the following spare parts per each group of similar sized units.

1. All parts recommended by the manufacturer in published literature as spare parts. As a minimum, provide the following:

a. Six (6) each of each type of fuse used.

b. One (1) of complete variable frequency drive for City of St. Pete Beach replacement inventory.

B. Packaging: Package spare parts in containers bearing labels and identify all spare parts for reordering. Deliver spare parts in original factory packages.

PRODUCTS

MANUFACTURERS

A. Acceptable Manufacturers: Acceptable manufacturers are listed below. Other manufacturers are not acceptable.

1. Yaskawa

MODEL

A. Acceptable Model: 2A0040FAA. Other models are not acceptable.

DESIGN

A. Converter Section: Provide input section that converts 240-volts, 60-hertz, 3-phase input to a fixed dc voltage using diodes, bridged rectifiers or SCR's.

B. Filter Sections: Provide dc link reactor and filter capacitors as required.

C. Inverter Section: Provide variable frequency drive inverter section that converts the fixed dc voltage to an adjustable frequency output utilizing a pulse-width modulation inverter. Maintain constant volts per hertz ratio on the output with voltage boost for startup as required.

D. Digital Control Devices: Provide a digital operator keypad located on the front door of the Pump Control Panel to allow setting of all programmable parameters and the following control functions:

1. Speed control settings
2. Speed meter with hertz and 0-100 percent scales
3. Output ammeter
4. Diagnostics package with fault indication and reset push button

E. Control Features: Provide a control system for each drive that allows the following functions:

1. Remote, isolated 4-20 ma speed control input
2. Isolated 4-20 ma speed output
3. Alarm outputs
4. ON/OFF status output
5. Additional features and controls as specified with the driven equipment

F. Internal Control Adjustments: Include the following control adjustments for each drive:

1. Acceleration time, 4 to 60 seconds
2. Deceleration time, 4 to 60 seconds
3. Minimum speed limit
4. Maximum speed limit
5. Inverter current limit
6. Supply undervoltage trip

G. Protection Features: Provide the following drive protection features:

1. Input line current limiting fuses rated 200,000 rms symmetrical amperes short circuit current.

2. Electronic overcurrent protection for instantaneous overload

3. AC input line undervoltage protection, adjustable from 60-100 percent nominal voltage with time delay adjustment and low speed override.

4. Over frequency protection

5. Phase loss protection

6. DC overvoltage protection

7. Logic supply voltage low level protection

8. Line-to-line and line-to-ground output short circuit protection

9. Line-to-line and line-to-ground surge arresters sized for 480-volt 3-phase grounded wye system

10. Overload capability of 110% of the motor FLA based on the NEC ratings for 60 seconds

11. Control circuit fuses

12. Overtemperature protection

13. Diagnostics module to indicate protection trip conditions

COMPONENTS

A. Power Solid State Components: Provide power solid state switching components with a one minute current rating greater than 110 percent of rated current for variable torque drives or 150 percent of rated current for constant torque drives.

B. Printed Circuit Boards: Apply a clear conformal coating of acrylic to all printed circuit boards.

WIRING:

A. General: Provide internal wiring with stranded switchboard wire having 600-volt rated, flame-resistant, type SIS insulation. Use No. 14 AWG wire for control interconnections. Provide power connections as required for the service.

B. Wire Marker: Provide wire markers at each end of all wires.

C. Wiring to Door Mounted Devices: Where wiring connections are made to equipment mounted on hinged doors, provide connections with extra flexible wires suitably cabled together and cleated.

D. Terminal Blocks: Provide wiring of all control connections to all external connections through individual, positive-latch, pull-apart type control terminal blocks rated 600-volts. Locate terminal blocks for front access.

E. Terminal for External Connections: Provide sufficient terminals for all devices external to the adjustable frequency drive.

SOURCE QUALITY CONTROL

A. Shop Test: Shop test each variable frequency drive in accordance with IEEE and NEMA standards, including high potential tests and other standard tests for that particular class of equipment. Notify the City fourteen (14) days prior to start of factory testing so that the City, at his option, may witness the testing.

1. After final assembly, test each variable frequency drive at full load with application of line-to-line and line-to-ground bolted faults and show that the adjustable frequency drive trips electronically without device failure.

2. After all tests have been performed, burn-in each adjustable frequency drive for 40 hours at 100 percent inductive or motor load.

3. After the burn-in cycle is complete, subject each adjustable frequency drive to a 30 minute cycling motor load test before inspection and shipping.

B. Operational Tests: After the equipment has been completely assembled, perform operational test to determine operating conditions and circuit continuity. Provide pushbuttons and selector switches to simulate all control input contacts and indicating lights to indicate all control outputs. Provide a 4-20ma signal generator to simulate analog signals.

EXECUTION

INSTALLATION

A. General: Install all equipment in accordance with the manufacturer's recommendations and approved shop drawings.

B. Protective Adjustments: Set all circuit breakers per the approved short circuit and coordination study.

C. Operational Adjustments: Set all operational devices for proper system operation.

D. Cable Connections: Terminate and label all field wiring per approved drawings.

FIELD QUALITY CONTROL

A. Inspections: Inspect, adjust and check the installation for physical alignment, cable terminations and ventilation.

B. Tests: Perform the following field tests:

1. Close and open each circuit breaker to test operation

2. When site conditions permit, energize and de-energize each equipment item served by each drive, testing the complete control sequence of each item including acceleration and deceleration over complete operating range.

3. Operate each variable frequency drive with driven equipment at full load and test for hot spots.

4. Test Reports: Furnish detailed test reports of all tests indicating test performed, discrepancies found, and corrective action taken.

C. Manufacturer's Field Services Representative: Provide the services of a factory-trained service engineer, specifically trained on the variable frequency equipment to assist in installation, start-up, testing, calibration, placing into operation and provide training as specified in the Specific/General Provisions.

1. Provide a service engineer when each drive is placed into operation.

2. Provide a service engineer at the jobsite as often as necessary until all problems are corrected and the equipment installation and operation are satisfactory.

3. Following completion of installation and field testing provide training for 6 employees of the City in the proper operation, troubleshooting and maintenance of the equipment as outlined below. All training will be at the City's facilities at a time agreeable to the City:

a. Operational Training: A minimum of two 4-hour sessions combining both classroom and hands-on instruction, excluding travel time.

b. Maintenance Training: A minimum of two 4-hour sessions combining both classroom and hands-on instruction, excluding travel time.

26.17 WARRANTY

A. Provide a warranty for all the electrical equipment in accordance with the requirements of other Sections. Under no circumstances shall the warranty be for less than one year starting from substantial completion.

26.18 TESTS AND INSPECTIONS

GENERAL

SCOPE OF WORK

A. The CONTRACTOR shall arrange for all inspections required by the local authority having jurisdiction. Approval of the installation by any such local authority shall not relieve the CONTRACTOR of any portion of his responsibility for adequate performance of the completed installation.

SUBMITTALS

A. The CONTRACTOR shall furnish at least two copies of test records to the ENGINEER. At the completion of all tests specified herein and any others required to make operational all equipment, all records shall be viewed by the CONTRACTOR, then transmitted directly to the ENGINEER. All prints shall be corrected and verified for corrections of in-field changes by the CONTACTOR prior to submittal.

PREPARATION

A. After completion and prior to being energized, the electrical installation shall be tested to the extent necessary to demonstrate that all systems are complete and ready for operation. The CONTRACTOR shall notify the ENGINEER and the OWNER for the final inspection prior to energizing the system.

B. The CONTRACTOR shall furnish all necessary test equipment to satisfactorily perform all tests specified herein or required by applicable codes and standards.

TESTING

A. The CONTRACTOR shall test all wire, cable, equipment, and systems installed or connected under the Agreement to assure proper installation, settings, connection, and functioning in accordance with the Contract Drawings, Specifications and the manufacturer's recommendations.

B. When conducting tests the CONTRACTOR shall:

1. Include all tests and inspections recommended by the equipment manufacturer and applicable Codes and Standards.

2. Include any additional tests required by the ENGINEER that he deems necessary because of field conditions to determine that equipment, material, and systems meet the requirements of the Specifications.

3. Maintain in quadruplicate a written record of all tests showing date, personnel conducting tests, equipment or material tested, tests performed, manufacturer and serial number of testing equipment and results.

C. Tests to be accomplished as a minimum are as follows:

1. Control Panels: provide temporary power source to all control circuits and check for proper operation prior to energizing equipment served.

2. Wires and Cables:

a. High-potential test shall be conducted on all service entrance conductors. The insulation resistance between conductors and also between conductors and ground shall be measured.

b. All other cables and wires shall be checked for continuity and shall be determined to be free of grounds prior to energizing.

3. Motor Test: Motor rotation will be checked by momentary energizing of motor. Correction of rotation shall be made by changing leads on the motor. Motors shall only be energized in the presence of a representative of the OWNER.

4. Check phase rotation on all bussing. Phasing shall be A-B-C, left to right, top to bottom, front to rear, as viewed from the front.

D. CONTRACTOR shall be responsible for any damage to equipment or material due to improper test procedures or test apparatus handling and shall replace or restore to original condition any damaged equipment or material.

E. CONTRACTOR shall furnish and use safety devices such as rubber gloves and blankets, protective screens, barriers, and danger signs to adequately protect and warn all personnel in the vicinity of the tests.

DEMONSTRATION OF COMPLETED ELECTRICAL SYSTEMS

A. Upon the completion of the installation and testing, the CONTRACTOR shall demonstrate and familiarize representatives of the OWNER with the system.

END OF SECTION

THIS PAGE INTENTIONALLY LEFT BLANK

SECTION 30

DIESEL ENGINE DRIVEN GENERATOR WITH WEATHERPROOF ENCLOSURE

PART 1 - GENERAL

1.01 SCOPE OF WORK

A. Furnish all labor, materials, equipment and incidentals required to install, put into operation, and field test the weatherproof diesel engine driven generator unit and appurtenances as shown on the Drawings and specified herein.

B. These Specifications are intended to give a general description of what is required, but do not cover all details which will vary in accordance with the requirements of the equipment as offered. It is, however, intended to cover the furnishing, the shop testing, and delivery and complete installation and field testing, of all materials, equipment and appurtenances for the complete units as herein specified, whether specifically mentioned in these Specifications or not.

C. For the unit there shall be furnished and installed all necessary and desirable accessory equipment and auxiliaries whether specifically mentioned in these Specifications or not. This installation shall incorporate the highest standards for the type of service shown on the Drawings. The CONTRACTOR is responsible for field testing of the entire installation and instruction of the regular operating personnel in the care, operation and maintenance of all equipment.

1.02 DESCRIPTION OF SYSTEM

A. The engine-generator set shall be mounted as shown on the Drawings and shall be arranged for automatic starting and stopping, and load transfer upon failure of the normal source of power. The unit controls shall provide for automatic exercising on a weekly basis.

1.03 QUALIFICATIONS

A. The proposed generator shall be a Caterpillar Package. Caterpillar generators are Standardized equipment and “or equal” generators will not be considered.

B. It is the intent of this specification to secure a generator system that have been prototype tested, factory built, production tested, site tested and of the latest commercial design, together with all accessories necessary for a complete installation as shown on the plans and drawings, and specifications herein. The equipment supplied and installed shall meet the requirements of the NEC, along with all applicable local codes and regulations. All equipment shall be new, of current production of a national firm which manufactures the engine/generators and controls, and assembles the generator systems as a matched unit so that there is one-source responsibility for warranty, parts, and service through a local representative with factory-trained servicemen.

C. Due to limited physical dimensions available at the site the unit must have the exact

physical dimensions as follows:

1. Generator set and sound attenuated enclosure – 167 inches long by 48.5 inches wide by 93 inches tall.

D. The unit shall be shipped to the jobsite by an authorized engine dealer having a parts and service facility within a 50 mile radius of the jobsite. In addition, and in order not to penalize the OWNER for unnecessary or prolonged periods of time for service or repairs to the emergency system, the bidding generator set supplier must have no less than eighty percent (80%) of all engine replacement parts locally available at all times. Certified proof of this requirement shall be furnished to the ENGINEER upon request.

E. All materials and parts comprising the unit shall be new and unused, of current manufacture, and of the highest grade, free from all defects or imperfections. Workmanship shall conform to the best modern practices. Only new and current models will be considered. The units offered under these Specifications shall be the product of a firm regularly engaged in the production of engine-generator equipment and shall meet the requirements of the Specifications set forth herein. Major exceptions to Specifications will be considered sufficient cause for rejection of the machines.

F. The generator set shall be listed to UL 2200.

G. The Engine/Generator Unit shall be as follows:

1. Engine/generator unit shall be a Caterpillar C2.2 diesel generator, 30KW. The unit shall operate at 240V, 0.8 power factor.

1.04 SUBMITTALS

A. Submittals shall include prototype test certification and specification sheets showing all standard and optional accessories to be supplied, schematic wiring diagrams, dimension drawings, and interconnection diagrams identifying by terminal number each required for interconnection between the generator set and the transfer switch included elsewhere in these specifications.

B. The successful bidder shall submit to the ENGINEER for review in accordance with other sections, complete sets of installation drawings, schematics, and wiring diagrams which shall show details of installation and connections to the work of other Sections, including foundation drawings showing location and size of foundation bolts for the pad type vibration isolators and brochures covering each item of equipment.

C. In the event that it is impossible to conform with certain details of the Specifications due to different manufacturing techniques, describe completely all nonconforming aspects.

D. The submittal data for each engine/generator set and sound attenuated, weatherproof enclosure shall include, but not necessarily be limited to, the following:

1. Installation drawings showing plan and elevations of the complete generator unit; foundation plan; exhaust silencer; starting battery; battery charger; and sound attenuated, weatherproof enclosure.

2. Engine Data:

a. Manufacturer
b. Model
c. Number of cylinders
d. RPM
e. Bore x stroke
f. BMEP at full rated load
g. Make and model and descriptive literature of electric governor
h. Fuel consumption rate curves at various loads
i. Engine continuous pump drive duty rating (without fan) HP
j. Gross engine horsepower to produce generator standby rating (including fan and all parasitic loads) HP

3. Generator Data :

a. Manufacturer
b. Model
c. Rated KVA
d. Rated SKVA
e. Rated KW
f. Voltage
g. Temperature rise above 40° C ambient
   i) Stator by thermometer
   ii) Field by resistance
   iii) Class of insulation

h. Generator efficiency, including excitation losses, at 80% power factor
   i) Full load
   ii) ¾ load
   iii) ½ load

4. Generator Unit Control Data:

a. Actual electrical diagrams including schematic diagrams, and interconnection wiring diagrams for all equipment to be provided. Standard preprinted sheets are not acceptable.

b. Legends for all devices on all diagrams.

c. Sequence of operation explanations for all portions of all schematic wiring diagrams.

5. Engine/Generator Unit and Sound Attenuated, Weatherproof Enclosure: Dimensional data shall be given for each Engine/Generator set and for the weatherproof enclosure.

a. Weight of skid mounted unit
b. Overall length
c. Overall width
d. Overall height
e. Exhaust pipe size
f. CFM of air required for combustion and ventilation
g. Heat rejected to jacket water and lubricating oil - BTU/hr.

h. Heat rejected to room by engine and generator - BTU/hr.
i. Weatherproof enclosure details and certification of manufacturing method per specifications.
j. Data on all miscellaneous items supplied.
h. The generator enclosure and subbase diesel tank submittal shall include wind load calculations and anchorage calculations. All calculations shall be in accordance with the Florida Building Code (FBC).

6. Furnish the number of copies required of the MANUFACTURER'S certified shop test record of the complete engine driven generator unit.

7. Warranty information.

8. Submit to the ENGINEER operating and maintenance data.

9. Submit to the ENGINEER the equipment MANUFACTURER'S Certificate of Installation, Testing, and Instruction.

10. Submit to the ENGINEER the written warranty as required below.

1.05 TESTING:

A. To assure that the equipment has been designed and built to the highest reliability and quality standards, the manufacturer and local representative shall be responsible for three separate tests: design prototype tests, final production tests, and site tests.

B. Design Prototype Tests: Components of the system such as the engine/generator set and accessories shall not be subjected to prototype tests since the tests are potentially damaging. Rather, similar design prototypes and preproduction models, which will not be sold, shall have been used for the following tests. Prototype test programs shall include the requirements of NFPA 110 and the following:

1. Maximum power (KW).

2. Maximum motor starting (KVA) instantaneous voltage dip.

3. Alternator temperature rise by embedded thermocouple and by resistance method per NEMA MG1-2240 and 16.40.

4. Governor speed regulation under steady-state and transient conditions.

5. Voltage regulation and generator transient response.

6. Fuel consumption at 1/4, ½, 3/4, and full load.

7. Harmonic analysis, voltage waveform deviation, and telephone influence factor.

8. Three-phase short circuit tests.

9. Alternator cooling air flow.

10. Torsional analysis testing to verify that the generator set is free of harmful torsional stresses.

11. Endurance testing.

C. Final Production Tests: Each generator set shall be tested under varying loads with guards and exhaust system in place. Tests shall include:

1. Single-step load pickup.

2. Transient and steady-state governing.

3. Safety shutdown device testing.

4. Voltage regulation.

5. Rated power.

6. Maximum power.

7. Upon request, arrangements to either witness this test will be made, or a certified test record will be sent prior to shipment.

1.06 SPECIAL TOOLS AND SPARE PARTS

A. Furnish one (1) set of all special tools required for normal operation and maintenance of the equipment being furnished. Furnish suitable steel tool chests complete with locks and duplicate keys.

B. The MANUFACTURER shall furnish two (2) complete spare replacement sets of all filter elements required for each generator unit supplied.

C. The MANUFACTURER shall furnish one (1) complete set of belts required for each generator unit supplied.

PART 2 - PRODUCTS

2.01 RATINGS

A. The standby rating of the generator sets shall not exceed the MANUFACTURER's published prime rating by more than 10%. The gross engine horsepower required to produce the standby ratings shall not exceed the MANUFACTURER's published continuous duty rating by more than 150 percent. Continuous duty rating shall be as defined in BS649 or DIN6270 but in no case shall it exceed the MANUFACTURER's published continuous duty rating for the engines as used in continuous rated pump drive applications. The gross engine horsepower required for the generator set standby ratings described above shall include all parasitic demands such as generator inefficiencies, fuel pumps, water pumps, radiator fan (for fan cooled models) and all accessories necessary to the unit's proper operation while operating at rated load and at a rotative speed not to exceed 1800 rpm.

B. The diesel engine driven generator set shall be capable of producing the specified standby KW rating for continuous electrical service during interruption of the normal utility source and shall be certified to this effect by the MANUFACTURER for the actual unit supplied.

C. The Diesel Engine/Generator Units shall be 30kW (240 volts, 3-Phase, 4-wire, 60 Hertz) at 0.8 power factor with fan.

2.02 ENGINES

A. The engine shall be full compression ignition, four cycle, single acting, solid injection engine, either vertical or "V" type. Speed shall not exceed 1800 revolutions per minute at normal full load operation. Multi block engines are not allowed. The engine governor shall be electronic type with a +/- 0.5 percent accuracy.

B. The engine shall be capable of satisfactory performance on No. 2 fuel oil (ASTM Designation D396). Diesel engines requiring a premium fuel will not be considered.

C. The engine shall be capable of operating at light loads for extended periods of time and shall provide a means to reduce carbonization. Periodic cleaning of exhaust ports shall not be required.

D. The engine shall be equipped with fuel filters, lube oil filters, intake air filters, lube oil cooler, fuel transfer pump, fuel priming pump, service meter, engine driven water pump, and unit mounted instruments. Unit mounted instruments shall include a fuel pressure gauge, water temperature gauge, and lubrication oil pressure gauge. The engine shall be provided with low oil pressure, high water temperature, low coolant level and overspeed safety shutdowns of the manual reset type. Additional instruments and safety shutdowns shall be provided as noted herein.

E. Injection pumps and injection valves shall be a type not requiring adjustment in service and shall be of a design allowing quick replacement by ordinary mechanics without special diesel experience. The engine shall have an individual mechanical injection pump and injection valve for each cylinder, any one of which may be removed and replaced from parts stock. Fuel injection pumps shall be positive action, constant-stroke pumps, activated by a cam driven by gears from the engine crankshaft. Fuel lines between injection pumps and valves shall be of heavy seamless tubing.

F. The fuel system shall be equipped with fuel filters having replaceable elements. Filter elements shall be easily removable from their housing for replacing without breaking any fuel line connections, or disturbing the fuel pump, or any other part of the engine. All fuel filters shall be conveniently located in one accessible housing, ahead of the injection pumps so that the fuel will have been thoroughly filtered before it reaches the pump. No screens or filters requiring cleaning or replacement shall be used in the injection pump or injection valve assemblies. The engine shall be equipped with a built-in gear-type, engine-driven fuel transfer pump, capable of supplying fuel through the filters to the injection pump at constant pressure.

G. In addition to the standard fuel filters provided by the engine MANUFACTURER, there shall also be installed a primary fuel filter and a water separator in the fuel inlet line to the engine.

H. The engine shall have a gear-type lubricating oil pump for supplying oil under pressure to main bearings, crank pin bearings, pistons, piston pins, timing gears, camshaft bearings, valve rocker

mechanism and governor. Effective lubricating oil filters shall be provided and so located and connected that all oil being circulated is continuously filtered and cleaned. Filters shall be accessible, easily removed and cleaned and shall be equipped with a spring-loaded by-pass valve as an insurance against stopping of lubricating oil circulation in the event the filters become clogged. The engines shall have a suitable water cooled lubricating oil cooler.

I. The engine shall be provided with one or more engine mounted dry type air cleaners of sufficient capacity to protect effectively the working parts of the engine from dust and grit.

J. During the initial start of the engine, a system shall be provided to pre-lube at low idle speed. When the internal oil pressure reaches a predetermined safe value, the engine will then increase to generator set operation speed.

K. Mounting: The unit shall be mounted on a structural steel sub-base and shall be provided with pad type vibration isolators.

L. The engine shall be EPA Tier 2 certified.

2.03 COOLING SYSTEMS

A. The engine shall be furnished with a unit mounted radiator-type cooling system having sufficient capacity for cooling the engine when the diesel generator set is delivering full rated load in an ambient temperature not to exceed 110 degrees F. The engines shall be provided with a thermostatic valve placed in the jacket water outlet between the engine and the cooling source. This valve shall maintain the proper jacket water temperature under all load conditions. Total air restriction from the radiator shall not exceed 0.5 inches of water at both inlet and outlet. A flexible connecting section shall be provided between the radiator and discharge louver frame.

B. Closed circuit jacket water system shall be treated with a rust inhibiter as recommended by the engine MANUFACTURER.

C. The expansion tank of the radiator shall be fitted with a low water level switch and wired into the safety shutdown system of the unit.

2.04 GENERATOR, EXCITER AND ACCESSORIES

A. Rating: The generator's KW ratings shall be as indicated in these specifications, 0.8 p.f., 1800 RPM, 3 phase, 4-wire, 60 Hertz, 240 volts, 12 leads, with a maximum temperature rise of 130 degrees C (both armature and field) by resistance at full rated load in ambient air of 40 degrees C. The generator shall conform to NEMA Standard MG-1.

B. Performance: The instantaneous voltage dip shall not exceed 15 percent of rated voltage when any load is applied. Recovery of stable operation shall occur within 5 seconds. Steady state modulation shall not exceed + ½ percent.

C. Construction:

1. The generator and exciter shall be dripproof, with split sleeve, or ball race bearings. A shaft-mounted brushless exciter shall be a part of the assembly. The stator cores shall

be built up of high grade silicon steel laminations precision punched, and individually insulated. Armature lamination followers and frame ribs shall be welded integral with the frames for support of the stator core. A directional blower shall be mounted on the unit to draw cooling air from the exciter and over the rotor poles and through louvered openings on the opposite end.

2. The exciter shall be a shaft driven PMG pilot exciter feeding the main's exciter, fast response type, with a rotating 3-phase full-wave bridge. The exciters shall have a low time constant and large capacity to minimize voltage transients under severe load changes.

3. The alternator shall be salient-pole, brushless, 12-lead reconnectable, self-ventilated of drip-proof construction with amortisseur rotor windings and skewed stator for smooth voltage waveform. The insulation shall meet the NEMA standard (MG1-33.40) for Class H and be insulated with epoxy varnish to be fungus resistant per MIL 1-24092. Temperature rise of the rotors and stators shall be limited to 130° C. The excitation systems shall be of brushless construction controlled by a solid-state voltage regulator capable of maintaining voltage within +/- 0.25% at any constant load from 0% to 100% of rating. The regulators must be isolated to prevent tracking when connected to SCR loads, and provide individual adjustments for voltage range, stability and volts-per-hertz operations; and be protected from the environment by conformal coating.

4. Generator rotor poles shall be built up of individually insulated silicon steel punchings. Poles shall be wound and bonded with high strength epoxy resin. Cage connections to the amortisseur rings shall be brazed for strong construction and permanent electrical characteristics. Each pole shall be securely bolted to the rotor shaft with bolts sized for the centrifugal forces on the rotor. Generator windings shall be braced for full line to ground fault currents, with solidly grounded neutral system.

D. Accessories and Attachments

1. Low Voltage Terminal Boxes: The generators shall have separate AC and DC low voltage terminal boxes with suitably numbered terminal strip for required connections.

2. Engine Water Heater: Thermostatically controlled and sized to maintain the manufacturer's recommended engine coolant temperature to meet start-up requirements of NFPA-99 and NFPA-110, Level 1. Power supply shall be 240 volts single phase.

3. Anti-condensation heater: Sized to prevent the accumulation of moisture or dampness in the alternator windings. Power supply shall be 120 volts single phase.

E. Generator Associated Controls:

1. Voltage Regulator:

i) The generator MANUFACTURER shall furnish a hermetically sealed, silicon controlled rectifier type voltage regulator employing a zener reference with a +1 percent regulation for the generator. The regulators shall include 3-phase voltage sensing, automatic short circuit protection and shall include automatic

underfrequency protection to allow the generator to operate at no load at less than synchronous speed for engine start-up and shutdown procedures. Switches and/or fuses shall not be used to provide this protection. An over-voltage sensing module with manual reset shall be furnished with the regulator. A volts per Hz., sensing module shall be provided as part of the regulation system.

ii) A voltage adjustment rheostat for 5 percent voltage adjustment on the unit shall be provided.

iv) High voltage step-down potential transformers shall be provided for the voltage regulator power input and sensing circuits if required.

2. Sustained Short Circuit: A permanent magnetic exciter shall be provided on the unit for sustaining a current of 300 percent during a short circuit, permitting the generator breaker to trip on overload. To prevent possible overheating of the armature windings, appropriate relaying shall be supplied to limit the fault to ten seconds.

2.05 SOUND ATTENUATED, WEATHER-PROTECTIVE ENCLOSURE

A. The intent of this Specification is to provide the OWNER with sound attenuated, weatherproof type generator set enclosures complete in every detail and requiring no additional in-field modifications or assembly, except where specifically allows by these Specifications. The enclosure is to be accurately dimensioned so as to be in compliance with the National Electrical Code (NEC), and the National Fire Protection Association (NFPA) for clearance of all specified items included therein, and all applicable fire codes for a structure and application of this type.

B. The enclosure shall conform to the following construction and design criteria as set forth.

1. Rigidity wind test equal to 150 MPH
2. Roof load equal to 75 lbs. per sq. ft.
3. Rain test equal to 4" per hour
4. Designed to Florida Building Code (FBC) and be provided with a Florida Department of Community Affairs Modular Building Insignia
5. Four (4) copies of drawings signed and sealed by a Florida Professional Engineer.
6. Note: An impact rated enclosure will be required.

C. Enclosure shall consist of a roof, two (2) sidewalls, two (2) end walls, and be manufactured of formed aluminum components. The enclosure is to be provided with a means for securely attaching the entire structure to the base/fuel tank as specified within.

D. Sidewalls and end walls shall be of formed 0.125 marine grade aluminum (the roof shall be 0.080”). The roof is to be bolted to both side and end walls to form a complete weather and wind resistance assembly.

E. Wall framing shall be incorporated in the panels by forming an open back box structure. Skin material shall be minimum thickness .080” 3003 grade aluminum. Enclosure shall have a baked on powder-coat finish for maximum corrosion resistance. Exterior skin panels shall be integral to the wall

structure and not separate pieces riveted onto framing members. Wall panels shall be no wider than 36" each and shall be removable without the use of special tools. Wall and roof panels shall be designed so that field replacement can be accomplished without disassembly of the entire structure if damage should occur.

F. A minimum of sixteen colors shall be available for enclosure exterior. Standard enclosure exterior color is WHITE unless otherwise specified.

G. Roof assembly shall be cambered to aid in rainwater runoff. Roof applications assemblies are to be mechanically fastened to the vertical wall sections. Glued or crimped roofs shall not be allowed nor considered as an acceptable alternative.

H. Air handling shall be as follows: Air will enter the enclosure through a Hood, Plenum or Sound Attenuated Louvers/Baffles, as determined by the specific application and shall allow for the airflow demand for proper cooling to generator set package. The cooling air Inlet system shall prevent water intrusion into the enclosure with the generator set operating at full rated load while allowing for a maximum air restriction of less than 0.30" H2O. Radiator Discharge shall be

through a gravity operated extruded aluminum backdraft type damper and into a vertical discharge plenum or hood. Discharge plenum/hood shall discharge air upward and be provided with a means to positively drain any and all water entering the discharge device. Air discharge devices shall in no event restrict airflow by more than 0.25" H2O. To ensure adequate airflow for cooling and combustion the static restriction over the entire system shall not exceed 0.50" H2O. Both Intake and Discharge hoods and plenums shall be provided with removable bird/rodent screening to prevent the entrance of debris, birds, rodents and other vermin.

I. All interior sidewalls shall contain non-asbestos thermal acoustic insulation with fire retardant properties. The insulation shall be completely covered by mill finish 0.050" perforated aluminum lining secured to the enclosure interior.

J. Four-point lifting provisions shall be provided and have sufficient capacity suitable for rigging the entire Enclosure assembly.

K. A minimum of two (2) single access doors shall be provided. Doors shall be manufactured of the same material as enclosure. Doors shall be fully gasketed to form a weather tight perimeter seal. Door hinges shall be full length stainless steel piano type and shall be attached with stainless steel hardware. Door handles shall be of a corrosion resistant material and shall provide for a lockable, secure entry point into the enclosure. Doors shall be insulated with no less insulation than is provided in the enclosure walls for sound attenuation.

L. Enclosure manufacturer shall provide all necessary hardware to internally mount the exhaust silencer(s) specified herein. Silencer mounting hardware shall maintain the weatherproof integrity of the enclosure system. If the silencer is mounted internally it should discharge upward into the radiator discharge plenum or hood where possible, otherwise the enclosure manufacturer shall provide an aluminum rain collar and rain dress shield. Rain Collar and Dress Shield shall be manufactured of aluminum or stainless steel and designed as a circular fabricated part that does not require hole indexing by the installing contractor during site installation.

M. As a minimum the enclosure shall provide an average 35db(A) sound reduction as measured at

one meter, five feet above grade level under free field conditions to allow for a maximum of 75db(A) at 5 meters from the enclosure.

N. Enclosure must bear the Florida Department of Community Affairs Modular Building Insignia.

O. The enclosure shop drawing submittal shall include wind load and anchorage calculations in accordance with the latest FBC.

P. Electrical Package:

1. Lights to be controlled by 3-way switches located at each of the doors.

2. Coolant Heater

3. Anti-condensation heater

4. Engine Starting Battery Charger

5. Emergency Stop Pushbutton : Provide a NEMA 4X SS, Red, Mushroom-head emergency pushbutton that will immediately stop the generator upon activation. Provide a placard above the pushbutton to read “Generator Emergency Shut Down”. Refer to drawings for pushbutton and placard location and details.

Q. Due to limited physical space available at the site, the unit must have the physical dimensions as follows:

1. Entire assembly of enclosure and sub base diesel fuel tank shall not exceed 167 inches in length. The assembly shall not exceed 48.5 inches in width.

2.06 EXHAUST SYSTEMS

A. Exhaust Silencers - A critical type, side inlet, end outlet, Miratech or equivalent silencer and a flexible stainless steel exhaust fitting properly sized shall be furnished and installed according to the MANUFACTURER's recommendation. Mounting shall be provided by the CONTRACTOR as required. The silencers shall be mounted so that its weight is not supported by the engine nor will exhaust system growth due to thermal expansion be imposed on the engine. Exhaust pipe size shall be sufficient to ensure that exhaust back pressure does not exceed the maximum limitations specified by the engine MANUFACTURER. So called "spiral" or truck mufflers are disallowed and will not be considered as equal to the industrial quality silencers specified above.

B. The silencers shall be fitted with a tail pipe extension and rain cap to prevent the entrance of rainwater.

C. Rain Skirt - At the point where the exhaust pipe flexible tubing penetrates the roof of the enclosure, a suitable "rain skirt" and collar shall be provided by the MANUFACTURER. It shall be designed to prevent the entrance of rain and allow for expansion and vibration of the exhaust piping without chafing or stress to the exhaust system. This detail must appear on the drawings submitted for approval.

2.07 AUTOMATIC STARTING SYSTEM

A. Starting Motor - A DC electric starting system with positive engagement shall be furnished. The motor voltage shall be 12 volts.

B. Automatic Control - Fully automatic engine start-stop controls in the generator control panels shall be provided. Controls shall provide shutdown for low oil pressure, high water temperature, overspeed, overcrank, and loss of engine coolant. Alarms for approaching high water temperature and impending low oil pressure shall also be included. Controls shall include a 30-second single cranking cycle limit with lockout or a cyclic crank system with lockout and overcrank protection.

C. Batteries - A lead-acid storage battery set of the diesel starting type shall be provided. Battery voltage shall be 12 volts, and the battery set shall be rated no less than 90 ampere hours. Necessary cables and clamps shall be provided.

D. Battery Trays - battery trays shall be provided for the batteries and shall conform to NEC 480-7(b). It shall be constructed of fiberglass and so treated as to be resistant to deterioration by battery electrolyte. Further, construction shall be such that any spillage or boil-over of battery electrolyte shall be contained within the tray to prevent a direct path to ground.

E. Battery Chargers - A current-limiting, automatic 12 volt DC charger shall be furnished to automatically recharge batteries. Charger shall float at 2.17 volts per cell and equalize at 2.33 volts per cell. It shall include overload protection, silicon diode full wave rectifiers, voltage surge suppressor, DC ammeter, DC voltmeter, and fused AC input. AC input voltage shall be 120 volts, single phase. Amperage output shall be no less than ten (10) amperes. Chargers shall be wall mounting type in NEMA 1 enclosure, and U.L. listed as an industrial control panel. The chargers shall be as manufactured by SENS per NFPA 110 and U.L. 508. The chargers shall be mounted and wired within the enclosure for the generator set by enclosure manufacturer.

2.08 MAIN LINE CIRCUIT BREAKER

A. Type - Main line, 600 volt, 80% rated, molded case circuit breaker mounted upon and sized to the output of the generator shall be installed as a load circuit interrupting and protection device. It shall operate both manually for normal switching functions and automatically during overload and short circuit conditions.

B. The trip unit for each pole shall have elements providing inverse time delay during overload conditions and instantaneous magnetic tripping for short circuit protection. The circuit breaker shall meet standards established by Underwriters Laboratories, National Electric Manufacturers Association, and National Electrical Code.

C. Generator exciter field circuit breakers do not meet the above electrical standards and are unacceptable for line protection.

D. Circuit breaker shall have battery voltage operated shunt trip wired to safety shutdowns to open the breaker in the event of engine failure.

E. The rating of the circuit breakers shall allow the starting of full generator SKVA.

H. The circuit breaker enclosure, together with all specified circuit breakers, shall be designed for the specific generator set specified and be equipped with rear copper stabs, or load cable lugs and be finish painted to match the generator set.

2.09 GENERATOR CONTROL PANELS

A. Type - A generator-mounted, NEMA 1 type, vibration isolated, 14-gauge steel control panel shall be provided for the generator set.

B. Control panel shall be Caterpillar standard offering.

C. Regulation of NFPA 110 Level 2 shall apply for instrumentation, alarm and shutdown. The instrumentation panel shall include, but not necessarily be limited to:

1. Gages for engine: digital or analog gages with ± 2% full scale accuracy :

   a. Oil Pressure
   b. Engine Coolant Temperature
   c. Voltmeter for DC Battery

2. Gages for generator: digital or analog gages with ± 2% full scale accuracy :

   a. AC Ammeter : Dual range
   b. AC Voltmeter : Dual range
   c. Frequency Meter : Range of 45-65 Hz.

3. Elapsed Time Meter.

4. 0-3000 RPM Tachometer - digital or analog gage with ± 2% full scale accuracy.

5. A seven position phase selector switch with – OFF position to show meter display of current and voltage of each generator phase. This selector switch may be manual or push-button.

6. A power source with circuit protection – 12 or 24 VDC.

7. An AC interlock to prevent starter re-engagement with engine running.

8. DC circuit protection.

10. Eight (8) individual fault indicator lights for:

   a. Overcrank Shutdown – Red
   b. Overspeed shutdown – Red
   c. High Coolant Temperature – Red
   d. Low Engine Oil Pressure – Red
   e. High Engine Coolant Temperatire Prealarm – Yellow
   f. Low Engine Oil Pressure Prealarm – Yellow
   g. Low Fuel – Yellow

h. Run – Green

D. Switches and Controls

1. Rheostat for adjusting output voltage of the generator to ± 5% of nominal voltage.

2. Over voltage protection shutdown switch.

3. Emergency stop switch mounted on control panel.

4. Engine start switch – with Run, Off, Reset, Automatic positions.

5. Five minute engine cool down timer.

6. Cyclic cranking switch.

E. Dry contacts for remote generator running indication, remote generator fail indication and cranking battery low voltage indication wired to terminal strips. Refer to drawings for required conduit/conductors.

F. All electrical penetrations in any enclosure shall be properly sealed from the weather.

G. Digital or solid state meters or metering devices shall be acceptable as a substitute for the electromechanical devices specified.

H. Engraved, screw-on type nameplates will identify each function indicated without abbreviation of function description. So-called international symbols will not be acceptable substitutes for this mandatory requirement.

I. Timing Functions - All control panel timing functions shall be accomplished by metal encased, solid-state, plug-in timing relays with 2PDT output contacts rated for ten (10) amperes. All solid-state time delay relays shall be reverse polarity protected and shall not function or be damaged by the application of improper polarity. Open printed circuit board type time delay circuits will not be accepted.

J. Control Relays - All control relays shall be the 3PDT plug-in type with .187QC blade terminals rated for (10) amperes. Each relay shall be equipped with a manual push to operate check button, L.E.D. or neon visual indicator, and see-thru dust cover for contact inspection and protection. Exposed contact and octal base plug-in relays are not acceptable.

K. Relay Sockets - All relay sockets shall be of the molded thermoplastic type, suitable for snap mounting on standard D.I.N. rail. Relay sockets will have wire clamp type terminals for secure wire connections, and one (1) piece bus bar connectors between the actual relay blade and wire clamp terminal. Relay sockets shall be rated for fifteen (15) amperes at 300V. Printed circuit board type relay sockets and relay sockets with push-on quick connect terminals are not acceptable.

2.10 GENERATOR FUEL SYSTEM

A. UL 142, FDEP Sub Base Fuel Tank as follows:

1. Sub base diesel storage tank sized to provide a minimum of approximately 48 hours of runtime between refueling at full load.

2. 3/16” Mild Steel Secondary Tank.

3. Rupture Basin with FDEP Approved Leak Detection Switch (Madison M-7000 EQ#682).

4. Diesel Tank Level transmitter with 4-20mA output.

5. Mechanical Fuel Level Gauge (Visible at Fill Point).

6. Supply and Return Connections.

7. 2” Fill with Lockable Cap with FDEP spill containment.

8. Normal and Emergency Vent Fittings Installed Per UL 2085.

9. Low Level Fuel Alarm Switch (FPI LS1001 EQ#817). Set at 40% remaining capacity wired to Control Panel Terminal Strip.

10. High Level Fuel Alarm Switch (FPI LS1001 EQ#817). Set at 90% tank capacity wired to Control Panel Terminal Strip. Provide local red alarm light and local audible alarm to indicate high level during fueling

11. Cable Stub Up Opening Under Circuit Breaker.

12. Generator Mounting Pads.

13. Mounting provisions shall allow for a minimum 2” airspace between concrete slab and secondary tank to facilitate inspection and maintenance of tank bottom. Designs that do not incorporate spacing between the tank bottom and the concrete pad will not be accepted.

14. 2 Lifting Points per Side (4 Total) for Lifting Generator Set, Enclosure and Tank (Empty).

15. Tank coated with Two Part Epoxy Primer and painted Gloss Black.

16. Tank shall be provided with steps welded to the side of diesel tank to accommodate access to the interior of the enclosure.

17. Tank sealed and shipped under vacuum per Florida Administrative Code Chapter 62-762 and NFPA30.

18. Tank shall be manufactured by Phoenix Products of Jacksonville, Florida. Alternate manufacturers must provide submittal data to the OWNER and ENGINEER for approval no less than fourteen (14) calendar days prior to bid date in order to be considered. Submission of equipment does not guarantee approval. Submittals deemed unsatisfactory upon initial review will not be allowed to be modified and/or resubmitted

after initial review.

PART 3 - EXECUTION

3.01 GENERATOR SET FIELD QUALITY CONTROL

A. A factory authorized service representative of the product supplied, shall inspect all field assembled and installed components and make any necessary corrections to insure proper equipment operation. Any cost associated with this procedure shall be born by the contractor.

3.02 GENERATOR SET TRAINING AND DEMONSTRATION

A. A factory representative of the product shall provide the City's maintenance personnel with a thorough period of instruction and hands-on session regarding the operation, trouble shooting and maintenance of all components of the product. Typical training period : one hour.

B. At least seven business days of notice shall be given by the Contractor to the City for delivery, installation, testing training and demonstration of the product.

3.03 GENERATOR TESTING

A. The engine-generator sets shall be given the MANUFACTURER'S standard factory load test prior to shipment.

B. Prior to final acceptance of the generator set, all equipment furnished under this Section shall be field tested per NFPA 110 to show it is free of any defects and the generator set can operate satisfactorily under full load test using resistance type load banks (brine tanks not acceptable). Test shall be for four (4) continuous hours. Any defects which become evident at this time shall be corrected before acceptance.

B. An all-in-place static alignment check of all rotating components shall be made prior to first start-up, after unit is secured in place and all final connections are made.

D. Site Tests: An installation check, start-up and load test shall be performed by the manufacturer's local representative. The Engineer, regular operators, and the maintenance staff shall be notified of the time and date of the site test. The tests shall include:

1. Fuel, lubricating oil, an antifreeze shall be checked for conformity to the manufacturer's recommendations, under the environmental conditions present and expected.

2. Accessories that normally function while the set is standing by shall be checked prior to cranking the engine. These shall include: coolant heater, battery charger, anti-condensation heater, annunciator, etc.

3. Start-up under test mode to check for exhaust leaks, path of exhaust gases outside the building, cooling air flow, movement during starting and stopping, vibration during running, normal and emergency line-to-line voltage, and phase rotation.

4. Automatic start-up by means of simulated power outage to test remote-automatic

starting, transfer of the load, and automatic shutdown. Prior to this test, all transfer switch timers shall be adjusted for proper system coordination.

5. External load bank tests shall be performed with the following criteria:

   i) One (1) hour at 25% load
   ii) One (1) hour at 50% load
   iii) One (1) hour at 75% load
   iv) One (1) hour at 100% load

   Engine coolant temperature, oil pressure, and battery charge level along with generator voltage, amperes, and frequency shall be monitored throughout the load bank tests and a written report shall be provided to the OWNER and ENGINEER for record purposes. If, for any reason, any of the one hour load bank tests are interrupted, the associated test shall be repeated.

E. A final alignment check and/or adjustment shall be made successful completion of the load bank tests.

3.04 GENERATOR SET SPARE PARTS

A. The spare parts shall include, but not necessarily be limited to the following:

1. Six (6) Fuses of each type and size used.
2. One (1) Oil, air and fuel filter.
3. One (1) set of belts.
4. One (1) of each special tool or device, if any, required to maintain the generator set and included equipment.

3.05 WARRANTY

A. Equipment furnished under this Section shall be guaranteed against defective parts and workmanship under terms of the MANUFACTURER'S and dealer's warranty. But, in no event, shall it be for a period of less than five (5) years and 2,500 operating hours from date of acceptance of the system by the city of Tampa and shall include labor, parts and travel time for

necessary repairs at the job site. Submittal data received without written warranties as specified will be rejected in their entirety.

END OF SECTION

SECTION 16050

ELECTRICAL - GENERAL PROVISIONS

PART 1 - GENERAL

1.01 SCOPE OF WORK

A. Furnish all labor, materials, equipment and incidentals required for complete electrical system for the City of St. Pete Beach's Lift Station Rehabilitation as hereinafter specified and shown on the Drawings.

B. The work, apparatus and materials, which shall be furnished under these Specifications and accompanying Drawings, shall include all items listed hereinafter and/or shown on the Drawings. Certain equipment, which will require wiring thereto and/or complete installation, is indicated. All materials necessary for the complete installation shall be furnished and installed by the CONTRACTOR to provide complete power, lighting, instrumentation, wiring and control systems as indicated on the Drawings and/or as specified herein.

C. The CONTRACTOR shall furnish and install the necessary cables, protective devices, conductors, supports, raceways, exterior electrical system, etc., to serve lighting loads and miscellaneous electrical loads as indicated on the Drawings and/or as specified. The CONTRACTOR shall install any control panel provided under this or any other sections on the specifications.

D. The work shall include complete testing of all equipment and wiring at the completion of the work and making any minor connection changes or adjustments necessary for the proper functioning of the system and equipment. All workmanship shall be of the highest quality; sub-standard work will be rejected.

E. For process instrumentation furnish and install all conduit, wire and interconnections between primary elements, transmitters, local indicators and receivers.

F. It is the intent of these Specifications that the electrical system shall be suitable in every way for the service required. All material and all work, which may be reasonably implied as being incidental to the work of this Section, shall be furnished at no extra cost.

1.02 CODES, INSPECTION AND FEES

A. All material and installation shall be in accordance with the latest edition of the National Electrical Code and all applicable national, local and state codes, laws and ordinances.

B. Pay all fees required for permits and inspections.

1.03 TESTS

A. Test all systems and repair or replace all defective work. Make all necessary adjustments to the systems and instruct OWNER's personnel in the proper operation of the systems.

B. The following minimum tests and checks shall be made prior to the energizing of electrical equipment. Test shall be by the CONTRACTOR and a certified test report shall be submitted providing all test results and stating that the equipment meets and operates in accordance with the Manufacturer's and job specifications, and that equipment and installation conforms to all applicable Standards and Specifications:

1. Test all 600-volt wire insulation with a megohm meter after installation. Make tests at not less than 1000 volts. Submit a written test report of the results to the engineer.
2. Mechanical inspection of all circuit breakers to assure proper operation.

C. The Engineer shall be notified forty-eight (48) hours before tests are made to enable the Owner to have designated personnel present.

1.04 CUTTING AND PATCHING

A. All cutting and patching shall be done in a thoroughly workmanlike manner.

1.05 INTERPRETATION OF DRAWINGS

A. The Drawings are not intended to show exact locations of conduit runs.

B. All three-phase circuits shall be run in separate conduits unless otherwise shown on the Drawings.

C. Unless otherwise approved by the Engineer, conduit shown exposed shall be installed exposed; conduit shown concealed shall be installed concealed.

D. Where circuits are shown as "home-runs," all necessary fittings and boxes shall be provided for a complete raceway installation.

E. The CONTRACTOR shall harmonize the work of the different trades so that interferences between conduits, piping, equipment, architectural and structural work will be avoided. All necessary offsets shall be furnished so as to take up a minimum space and all such offsets, fittings, etc., required to accomplish this shall be furnished and installed by the CONTRACTOR without additional expense to the Owner. In case interference develops, the Owner's authorized representative is to decide which equipment, piping, etc., must be relocated, regardless of which was installed first.

F. The locations of equipment, fixtures, outlets, and similar devices shown on the Drawings are approximate only. Exact locations shall be as approved by the Engineer during construction. Obtain in the field all information relevant to the placing of electrical work and in case of any interference with other work, proceed as directed by the Engineer and furnish all labor and materials necessary to complete the work in an approved manner.

G. Circuit layouts shown are not intended to show the number of fittings, or other installation details. Furnish all labor and materials necessary to install and place in satisfactory operation all power, lighting, and other electrical systems shown. Additional circuits shall be installed wherever needed to conform to the specific requirements of the equipment.

H. The ratings of motors and other electrically operated devices together with the size shown for their branch circuit conductors and conduits are approximate only and are indicative of the probable power requirements insofar as they can be determined in advance of the purchase of equipment.

I. All connections to equipment shall be made as shown, specified and directed and in accordance with the approved shop drawings, regardless of the number of conductors shown on the Electrical Drawings.

1.06 RECORD DRAWINGS

A. As the work progresses, legibly record all field changes on a set of project Contract Drawings. When the project is complete, furnish a complete set of reproducible "As-built" drawings for the Project Record Documents.

1.07 COMPONENT INTERCONNECTIONS

A. Component equipment furnished under this Specification will not be furnished as integrated systems.

B. Analyze all systems components and their shop drawings; identify all terminals and prepare drawings or wiring tables necessary for component interconnection.

1.09. WARRANTY

A. Provide a warranty for all the electrical equipment in accordance with the requirements of other Sections. Under no circumstances shall the warranty be for less than one year starting from substantial completion.

PART 2 – PRODUCTS (Not Used)

PART 3 – EXECUTION (Not Used)

END OF SECTION

SECTION 16075

ELECTRICAL IDENTIFICATION

PART 1 - GENERAL

1.01 SUMMARY

A. Section Includes:

1. Nameplates.
2. Labels.
3. Wire markers.
4. Lockout Devices.

1.02 CLOSEOUT SUBMITTALS

A. Project Record Documents: Record actual locations of tagged devices; include tag numbers.

1.03 DELIVERY, STORAGE, AND HANDLING

A. Division 1 - Product Requirements: Requirements for transporting, handling, storing, and protecting products.

B. Accept identification products on site in original containers. Inspect for damage.

C. Accept materials on site in original factory packaging, labeled with manufacturer's identification, including product density and thickness.

D. Protect insulation from weather and construction traffic, dirt, water, chemical, and mechanical damage, by storing in original wrapping.

1.04 ENVIRONMENTAL REQUIREMENTS

A. Division 1 - Product Requirements: Environmental conditions affecting products on site.

B. Install labels and nameplates only when ambient temperature and humidity conditions for adhesive are within range recommended by manufacturer.

PART 2 - PRODUCTS

2.01 NAMEPLATES

A. Product Description: Laminated three-layer plastic with engraved white letters on black background color.

B. Letter Size:

1. 1/8 inch high letters for identifying individual equipment and loads.
2. 1/4 inch high letters for identifying grouped equipment and loads.

C. Minimum nameplate thickness: 1/8 inch.

1.05 LABELS

A. Labels: Embossed adhesive tape, with 3/16 inch white letters on black background.

1.06 WIRE MARKERS

A. Description: Cloth tape, split sleeve, or tubing type wire markers.

B. Legend:

1. Power and Lighting Circuits: Branch circuit or feeder number.
2. Control Circuits: Control wire number as indicated on shop drawings.

1.07 LOCKOUT DEVICES

A. Lockout Hasps:

1. Anodized aluminum hasp with erasable label surface; size minimum 7-1/4 x 3 inches.

PART 3 – EXECUTION

3.01 PREPARATION

A. Degrease and clean surfaces to receive adhesive for identification materials.

3.02 INSTALLATION

A. Nameplate Installation:

1. Install nameplate parallel to equipment lines.
2. Install nameplate for each electrical distribution and control equipment enclosure with corrosive-resistant mechanical fasteners, or adhesive.
3. Install nameplates for each control panel and major control components located outside panel with corrosive-resistant mechanical fasteners, or adhesive.
4. Secure nameplate to equipment front using screws or adhesive.
5. Secure nameplate to inside surface of door on recessed panelboard in finished locations.
6. Install nameplates for the following:

a. Data Flow Systems Control Panel.
b. Service Entrance Disconnect.
c. Devices as indicated on the drawings.

B. Wire Marker Installation:
   1. Install wire marker for each conductor at panelboard gutters, pull boxes, outlet and junction boxes, and each load connection.
   2. Mark data cabling at each end. Install additional marking at accessible locations along the cable run.
   3. Install labels at data outlets identifying patch panel and port designation.

END OF SECTION

SECTION 16120

CONDUIT AND CONDUCTORS

PART 1 - GENERAL

1.01 SCOPE OF WORK

A. Furnish all labor, materials, equipment and incidentals required for complete electrical system for the City of St. Pete Beach's Lift Station Rehabilitation project, as hereinafter specified and shown on the Drawings.

1.02 CODES

A. All material and installation shall be in accordance with the latest edition of the National Electrical Code (N.E.C.), and NFPA 70 code articles that are applicable to the minimum electrical installation requirements for sewer lift stations.

PART 2 - PRODUCTS

2.01 GENERAL

A. The materials used in all systems shall be new, unused and as hereinafter specified. All materials where not specified shall be of the very best of their respective kinds. Samples of materials or Manufacturer's specifications shall be submitted for approval as required by the Engineer.

B. Materials and equipment used shall be Underwriters Laboratories, Inc. listed and conform with applicable standards of NEMA and ANSI.

C. Electrical equipment shall, at all times during construction, be adequately protected against mechanical injury or damage by water. Electrical equipment shall not be stored out-of-doors. Electrical equipment shall be stored in dry permanent shelters. If any apparatus has been damaged, such damage shall be repaired by the CONTRACTOR at his expense. If any apparatus has been subject to possible injury by water, it shall be thoroughly dried out and put through such special tests as directed by the Engineer, at the cost and expense of the CONTRACTOR, or shall be replaced by the CONTRACTOR at his own expense.

2.02 RACEWAYS AND FITTINGS

A. All raceways installed above ground shall be Rigid Aluminum Conduit (RAC).

B. Raceways installed below grade shall be PVC schedule 40 conduit.

C. Where conduit is cut, the inside edge shall be reamed smooth to prevent injury to conductors.

2.03 CONDUCTORS

A. Conductors shall be copper. Power circuits shall have 600 volt insulation (Underwriters' approved Type THWN). Conductors shall be color coded in accordance with the NEC.

B. All motor controls, remote indicating lights, alarm circuits and metering loops shall be wired with #14 stranded copper conductors. Insulation shall be THWN. An overall PVC jacket shall be provided for multi-conductor cables where required by the drawings.

C. All shielded instrumentation cable shall be 2/C#16 shielded with 600 volt insulation and PVC outer jacket, Belden 8719

2.04 MISCELLANEOUS EQUIPMENT

A. Boxes and Fittings:

1. NEMA 4X boxes shall be used outdoors or in "wet" locations. Construction shall be 316 stainless steel.

2. Conduit hubs shall be used for all outdoor conduit terminations and shall be as manufactured by Meyers Electric Products, Inc., Raco Div., Appleton Electric Co., or approved equal.

PART 3 - EXECUTION

3.01 CONDUIT INSTALLATION

A. Where conduits enter or leave all outlet boxes, cabinets safety switches, tap boxes, motor controllers, etc., threaded hubs shall be used. Bushings 1-inch and larger shall be of an approved insulated type. Unless otherwise indicated, conduit 2-inches shall be supported at intervals not exceeding ten (10) feet.

B. During construction, all installed raceways shall be temporarily plugged or otherwise protected from the entrance of moisture, dirt, trash, plaster, moisture, etc., through neglect of the CONTRACTOR to so protect them, shall be replaced by the CONTRACTOR without additional expense to the Owner. No kinked, clogged or deformed raceways will be permitted on the job. Raceways shall be cut to proper length so that ends will fit accurately in the outlets. Where raceways cross building expansion joints, a suitable raceway expansion fitting shall be used.

C. Size of raceway shall not be less than NEC requirements, but in no case shall be less than indicated on the Drawings. Combining of circuits, other than detailed, will not be permitted. The CONTRACTOR shall install larger size raceways than detailed where there is excessive length of unbroken run or excessive number of bends.

D. Bends in metallic raceways shall be made while "cold" and in no case shall the raceways be heated. Raceways shall not be bent through more than 90º. The radius of bends shall not be less than six (6) times the internal diameter of the raceway. Not more than

four (4) (equivalent 90º) bends will be permitted between outlets, the bends at the outlets being counted.

E. Raceways shall be properly aligned, grouped and supported. Exposed raceways shall be installed at the right angles to or parallel to the principal structural members. Concealed raceways, unless otherwise indicated, may take the most direct route between outlets. Raceways shall be firmly held in place. Raceways shall run to avoid trapping wherever possible. Where areas are indicated for future openings, foundations, etc., all raceways shall be run around such areas. The CONTRACTOR shall provide necessary inserts in poured concrete areas and shall furnish and install all necessary sleeves through walls, floors and roofs for passage of raceways. Sleeves through roofs and/or exterior walls shall be properly sealed by the CONTRACTOR against entrance of moisture, etc., into the building. Where necessary repairs to the building structure using material in no way inferior to that originally installed and using labor skilled in the trades involved.

3.02 CONDUCTORS

A. Splices, taps and attachments of fittings and lugs shall be electrically and mechanically secure. Approved solderless lugs and connectors shall be used for all conductors with 2-bolt type being used for sized No. 4/0 and larger. There shall be plenty of slack cable in boxes, outlets and cabinets to insure that there is no binding at the bushings. All lugs shall be of the correct sizes for the conductor in order to fit the conductor into a lug. Taping of joints shall be either with Scotch electrical tape or varnished cambric tape and friction tape to secure insulation strength equal to that of the conductors joined.

B. Splices or joints with friction tape outer covering in conductors of size No. 4 AWG or larger shall have three (3) coats of suitable insulating varnish point applied over tape. Conductors shall be color coded in accordance with NEC.

3.03 GROUNDING

A. The entire electrical system shall be completely and effectively grounded as required by the NEC and as specified hereinafter.

B. All metallic raceways shall be mechanically and electrically secure at all joints and at all boxes, cabinets, fittings and equipment. Metallic raceways entering the motor control center control panels or other electrical boxes shall be grounded to the appropriate ground bus. All metallic raceways shall be electrically continuous throughout the entire conduit system. Bond wires shall be used in exterior concrete pull boxes.

3.04 SUPPORTS

A. The CONTRACTOR shall furnish and install all necessary supports for properly mounting all electrical equipment and raceways. Such supports shall be fabricated and installed in a neat and workmanlike manner, and care shall be taken that at no time shall any portion of the building structure be overloaded. Should the building structure sustain damage through carelessness or through failure of the CONTRACTOR to properly support and install the electrical equipment, the CONTRACTOR shall bear all costs involved in repairing or replacing such installation.

B. All steel shapes exposed to the weather shall be galvanized after all cutting, drilling, and/or welding is done. All shop connections shall be welded or riveted and all field connections shall be bolted on all outdoor structures. Where the field cutting or drilling of

galvanized steel is necessary, the CONTRACTOR shall apply one (1) coat of priming paint and one (1) finish coat of aluminum and oil paint.

C. All conduit support systems (unistrut or equivalent), support system hardware (nuts, bolts, etc.) and conduit clamps shall be 316 stainless steel.

3.05 TESTS AND CHECKS

A. The following minimum tests and checks shall be made prior to the termination of any field wiring.

1. Megger terminals and buses after disconnecting devices sensitive to megger voltage.
2. A 1,000V DC megger shall be used for these tests.
3. The first test shall be made with main circuit breaker closed and all remaining breakers open. A second test shall be made with all circuit breakers closed.
4. The test results shall be recorded and forwarded to the Engineer for his review. Minimum megger readings shall be 100 megohms in both tests.

B. The following shall be done before energizing any motor control center or control panel.

1. Remove all current transformer shunts after completing the secondary circuit.
2. Install overload relay heaters based on actual motor nameplate current.
3. Vacuum clean all interior equipment.

END OF SECTION

THIS PAGE INTENTIONALLY LEFT BLANK

SECTION 16140

WIRING DEVICES

PART 1 GENERAL

1.01 SUMMARY

A. Section Includes: Requirements for providing, wiring devices and appurtenances as indicated, in accordance with the Contract Documents.

1.02 REFERENCES

A. Codes and standards referred to in this Section are:

1. Fed Spec WC 596 - Electrical Power Connector, Plug, Receptacle and Cable Outlet
2. Fed Spec WS 896 - Toggle and Lock, Flush Mounted Switches
3. CSA C22.2-182.1 - Industrial-type, Special-Use Attachment Plugs, Receptacles and Connectors
4. UL 20 - General - Use Snap Switches
5. UL 498 - Attachment Plugs and Receptacles
6. UL 508 - Industrial Control Equipment
7. UL 894 - Switches for Use in Hazardous (Classified) Locations
8. UL 1010 - Receptacle-Plug Combinations for Use in Hazardous (Classified) Locations
9. UL 1682 - Plugs, Receptacles, and Cable Connectors of the Pin and Sleeve Type
10. UL 1686 - Standard for Pin and Sleeve Configurations

1.03 SUBMITTALS

A. General: Furnish all submittals, including the following, as specified elsewhere.

1.04 DELIVERY, STORAGE AND HANDLING

A. General: Deliver, store and handle all products and materials as specified the Specific/General Provisions.

PART 2 PRODUCTS

2.01 MANUFACTURERS

A. Standard of Quality and General Configuration: Use of manufacturer's name and model or catalog number is for the purpose of establishing the desired quality and configuration.

B. Configuration and Rating: Provide NEMA specification grade wiring devices in the type, color, configuration and electrical rating for the service indicated.

C. Symbols: See the electrical symbol list shown for identification of all device types.

D. Acceptable Manufacturers: Acceptable manufacturers are listed below. Other manufacturers of equivalent products may be submitted for review.

1. Hubbell Inc. Wiring Device/Kellems Division
2. Pass and Seymour
3. Cooper Wiring Devices
4. Leviton
5. Appleton Electric Company
6. Crouse-Hinds Company
7. Thomas & Betts

2.02 LIGHTING TOGGLE SWITCHES

A. General: Provide toggle switches of specification grade rated 20- amperes, 120-277 volts ac conforming to Fed. Spec. WS 896 and UL Standard 20. Manufacture switches with back and side wired binding screw type terminals, one piece spring contact arm and terminal plate with silver alloy contacts, one piece steel mounting strap with an assured grounding clip, thermoset body color coded

for identification by amperage and a brown toggle. Provide ivory toggles in finished areas.

B. Types:

DESCRIPTION	HUBBELL CAT. NO.
Single pole	HBL1221
Three way	HBL1223

2.04 CONVENIENCE RECEPTACLES

A. General: Provide specification grade convenience receptacles conforming to Fed. Spec. WC 596 UL listed, with nylon impact resistant face, one piece metal wrap around mounting strap with assured grounding clip, back and side wired binding screw type

terminals, brass power contacts and a heavy duty heat stabilized thermoset plastic base. Provide brown devices in unfinished areas and ivory devices in finished areas unless otherwise specified.

B. TYPES:

DESCRIPTION	RATING	COLOR	HUBBELL CAT. NO.
Duplex	NEMA 5-20R 20A, 125V, 2P, 3W	Ivory	HBL5362I

2.05 BOXES

A. Outlet Boxes: Provide outlet boxes in accordance with the requirements specified in Section 26 05 33.

2.07 PLATES AND COVERS

A. General: Provide covers and plates for the various areas as follows:

1. Outdoor Areas:

a. Provide weatherproof, gasketed, covers.

1. Indoor Areas:

a. Provide aluminum plates.

PART 3 EXECUTION

3.01 INSTALLATION

A. General: Install all wiring devices in accordance with manufacturer's recommendations and approved shop drawings.

B. Toggle Switches: Install toggle switches applicable for the area environment for switching lighting or other branch circuit loads.

C. Receptacles: Install receptacles applicable for the area environment.

D. Grounding: Ground all devices in accordance with the requirements specified in Section 16450.

END OF SECTION

THIS PAGE INTENTIONALLY LEFT BLANK

SECTION 16190

SUPPORTING DEVICES

PART 1 – GENERAL

1.01 WORK INCLUDED

A. Conduit supports.

B. Channel supports for equipment.

1.02 REFERENCE STANDARDS

A. National Electrical Code

PART 2 - PRODUCTS

2.01 CONDUIT SUPPORTS

A. Single Runs: Aluminum conduit clamps. Plumbers perforated straps or wire will not be acceptable.

B. Multiple Runs: Conduit rack with 25 percent spare capacity.

C. Vertical Runs: Channel support with conduit fittings.

2.02 CHANNEL SUPPORTS

A. Channel sections shall be 316 stainless steel.

B. The cross sectional width dimension of the channel shall be a minimum of 1-5/8-inch. The depth will be as required to satisfy the load requirements. Channel with 1-5/8-inch depth or greater shall be standard 12 gauge stainless steel.

C. Attachment holes, when required, shall be factory punched on hole centers equal to the channel cross sectional width dimension and shall be a maximum of 9/16-inch in diameter.

D. Channel attachment nuts shall be designed to prelocate in the channel and provide a bearing surface on the turned down lips while making positive contact with the side walls of the channel.

E. Straps for the support of conduit shall be designed such that the attachment nut is captivated on the shoulder of the strap when tightened, and the attachment bolt shall allow tightening by either a screwdriver or wrench.

F. All nuts, bolts, straps, threaded rod and edges of punched holes shall be protected with the same finish as the channel.

G. When tested in accordance with ASTM B117-73 procedure, there shall be no sign of red rust after 1,000 hours of testing. Certified test results to support this must be submitted upon request.

2.03 ANCHOR METHODS

A. Hollow Masonary: Toggle bolts or tapcons.

B. Solid Masonary: Tapcons.

C. Metal Surfaces: machine screws, bolts, welded studs, or beam type clamps on steel joints.

D. Wood Surfaces: Wood Screws

E. Concrete Surfaces: Tapcons.

PART 3 - EXECUTION

3.01 INSTALLATION

A. Layout to maintain headroom, neat mechanical appearance, and to support equipment loads required.

B. Verify exact mounting and installation requirements with the Owner's representative prior to installation.

END OF SECTION

SECTION 16450

GROUNDING SYSTEM

PART 1 - GENERAL

1.01 SCOPE OF WORK

A. Furnish and install a complete grounding system in strict accordance with Article 250 of the National Electrical Code and as hereinafter specified and shown on the Drawings.

1.02 RELATED WORK

A. Wire and conduit shall be as specified under Section 16120.

PART 2 - PRODUCTS

2.01 MATERIALS

A. Ground rods: Ground rods shall be Copperclad steel 3/4-inch x 20 foot. Ground rods shall be Copperweld or be an approved equal product.

PART 3 - EXECUTION

3.01 GENERAL

A. Grounding electrodes shall be driven as required. Where rock is encountered, grounding plates may be used in lieu of grounding rods.

B. All equipment enclosures, motor and transformer frames, conduits systems, cable armor, exposed structural steel and similar items shall be grounded.

C. All connections shall be made by welding process equal to Cadweld.

E. All underground conductors shall be laid slack and where exposed to mechanical injury shall be protected by pipes or other substantial guards. If guards are iron pipe or other magnetic material, conductors shall be electrically connected to both ends of the guard.

F. The Contractor shall exercise care to insure good ground continuity, in particular between the conduit system and equipment frames and enclosures. Where necessary, jumper wires shall be installed.

3.02 TESTS

A. The Contractor shall test the ground resistance of the system. All test equipment shall be provided by the Contractor and approved by the Engineer. Dry season resistance of the system shall not exceed 2 ohms. If such resistance cannot be obtained with the system as shown, the Contractor shall provide additional grounding as directed by the Engineer, without additional payment. The Contractor shall submit all grounding system test results to the Engineer for review.

SECTION 16495

AUTOMATIC TRANSFER SWITCH

PART 1 - GENERAL

1.01 SCOPE OF WORK

A. Furnish and install automatic transfer switch (ATS) with four (3) poles, solid neutral, rated for 150 amperes, 240Volts, withstand and close-on ratings of 22,000 RMS symmetrical amperes minimum. Automatic transfer switch shall consist of an inherently double throw power transfer switch mechanism and a microprocessor controller to provide automatic operation. Transfer switch and controller shall be the products of the same manufacturer. Transfer switch shall be delayed transition type. Conductors for Normal Power shall connect at the top of the ATS. Conductors for Emergency Power shall connect at the bottom of the ATS.

1.02 CODES AND STANDARDS

The automatic transfer switches and controls shall conform to the requirements of:

A. UL 1008 - Standard for Transfer Switch Equipment

B. CSA certified to CSA 22.2 No. 178 – 1978 Automatic Transfer Switches

C. IEC 60947-6-1 Low-voltage Switchgear and Controlgear; Multifunction equipment; Automatic Transfer Switching Equipment

D. NFPA 70 - National Electrical Code

E. NFPA 99 - Essential Electrical Systems for Health Care Facilities

F. NFPA 110 - Emergency and Standby Power Systems

G. IEEE Standard 446 - IEEE Recommended Practice for Emergency and Standby Power Systems for Commercial and Industrial Applications

H. NEMA Standard ICS10-1993 (formerly ICS2-447) - AC Automatic Transfer Switches

I. UL 508 Industrial Control Equipment

1.03 ACCEPTABLE MANUFACTURERS

Automatic transfer switch shall be ASCO 300 Series.

PART 2 - PRODUCTS

2.01 MECHANICALLY HELD TRANSFER SWITCH

A. The transfer switch shall be electrically operated and mechanically held. The electrical operator shall be a momentarily energized, single-solenoid mechanism. Main operators which include overcurrent disconnect devices, linear motors or gears shall not be acceptable. The switch shall be mechanically interlocked to ensure only two possible positions, normal or emergency.

B. All transfer switch sizes shall use only one type of main operator for ease of maintenance and commonality of parts.

C. The switch shall be positively locked and unaffected by momentary outages, so that contact pressure is maintained at a constant value and contact temperature rise is minimized for maximum reliability and operating life.

D. All main contacts shall be silver composition. Switches rated 800 amperes and above shall have segmented, blow-on construction for high withstand and close-on capability and be protected by separate arcing contacts.

E. Inspection of all contacts shall be possible from the front of the switch without disassembly of operating linkages and without disconnection of power conductors. Switches rated 800 amps and higher shall have front removable and replaceable contacts. All stationary and moveable contacts shall be replaceable without removing power conductors and/or bus bars.

F. Designs utilizing components of molded-case circuit breakers, contactors, or parts thereof, which are not intended for continuous duty, repetitive switching or transfer between two active power sources are not acceptable.

G. The neutral conductors must be solid as indicated in this specification.

H. Contractor to provide a fully rated ground bus with AL-CU lugs as required.

2.02 MICROPROCESSOR CONTROLLER

A. The controller's sensing and logic shall be provided by a single built-in microprocessor for maximum reliability, minimum maintenance, and the ability to communicate serially through an optional serial communication module.

B. A single controller shall provide twelve selectable nominal voltages for maximum application flexibility and minimal spare part requirements. Voltage sensing shall be true RMS type and shall be accurate to ± 1% of nominal voltage. Frequency sensing shall be accurate to ± 0.2%. The panel shall be capable of operating over a temperature range of -20 to +60 degrees C and storage from -55 to +85 degrees C.

C. The controller shall be connected to the transfer switch by an interconnecting wiring harness. The harness shall include a keyed disconnect plug to enable the controller to be disconnected from the transfer switch for routine maintenance. Sensing and control logic shall be provided on multi-layer printed circuit boards. Interfacing relays shall be industrial grade plug-in type with dust covers. The panel shall be enclosed with a protective cover and be mounted separately from the transfer switch unit for safety and

ease of maintenance. The protective cover shall include a built-in pocket for storage of the operator's manuals.

D. All customer connections shall be wired to a common terminal block to simplify field-wiring connections.

E. The controller shall meet or exceed the requirements for Electromagnetic Compatibility (EMC) as follows:

1.	EN 55011:1991	Emission standard - Group 1, Class A
2.	EN 50082-2:1995	Generic immunity standard, from which:
3.	EN 61000-4-2:1995	Electrostatic discharge (ESD) immunity
4.	ENV 50140:1993	Radiated Electro-Magnetic field immunity
5.	EN 61000-4-4:1995	Electrical fast transient (EFT) immunity
6.	EN 61000-4-5:1995	Surge transient immunity
7.	EN 61000-4-6:1996	Conducted Radio-Frequency field immunity

2.03 ENCLOSURE

A. The ATS shall be mounted in a NEMA 4X 316 stainless steel wall-mounted enclosure.

PART 3 - OPERATION

3.01 CONTROLLER DISPLAY AND KEYPAD

A. A four line, 20 character LCD display and keypad shall be an integral part of the controller for viewing all available data and setting desired operational parameters. Operational parameters shall also be available for viewing and limited control through the serial communications input port. The following parameters shall only be adjustable via DIP switches on the controlller:

1. Nominal line voltage and frequency
2. Single or three phase sensing
3. Operating parameter protection
4. Transfer operating mode configuration (Open transition, Closed transition, or Delayed transition)

All instructions and controller settings shall be easily accessible, readable and accomplished without the use of codes, calculations, or instruction manuals.

3.02 VOLTAGE, FREQUENCY AND PHASE ROTATION SENSING

A. Voltage and frequency on both the normal and emergency sources (as noted below) shall be continuously monitored, with the following pickup, dropout, and trip setting capabilities

(values shown as % of nominal unless otherwise specified):

Parameter	Sources	Dropout / Trip	Pickup / Reset
Undervoltage	N&E,3ϕ	70 to 98%	85 to 100%
Overvoltage	N&E,3ϕ	102 to 115%	2% below trip
Underfrequency	N&E	85 to 98%	90 to 100%
Overfrequency	N&E	102 to 110%	2% below trip
Voltage unbalance	N&E	5 to 20%	1% below dropout

B. Repetitive accuracy of all settings shall be within ± 0.5% over an operating temperature range of -20°C to 60°C.

C. Voltage and frequency settings shall be field adjustable in 1% increments either locally with the display and keypad or remotely via serial communications port access.

D. The controller shall be capable (when activated by the keypad or through the serial port) of sensing the phase rotation of both the normal and emergency sources. The source shall be considered unacceptable if the phase rotation is not the preferred rotation selected (ABC or CBA).

E. Source status screens shall be provided for both normal & emergency to provide digital readout of voltage on all 3 phases, frequency, and phase rotation.

F. The controller shall include a user selectable algorithm to prevent repeated transfer cycling to a source on an installation which experiences primary side, single phase failures on a Grounded Wye – Grounded Wye transformer which regenerates voltage when unloaded. The algorithm shall also inhibit retransfer to the normal (utility) source upon detection of a single phasing condition until a dedicated timer expires, the alternate source fails, or the normal source fails completely and is restored during this time delay period. The time delays associated with this feature shall be adjustable by the user through the controller keypad and LCD.

3.03 TIME DELAYS

A. An adjustable time delay of 0 to 6 seconds shall be provided to override momentary normal source outages and delay all transfer and engine starting signals. Capability shall be provided to extend this time delay to 60 minutes by providing an external 24 VDC power supply.

B. A time delay shall be provided on transfer to emergency, adjustable from 0 to 60 minutes, for controlled timing of transfer of loads to emergency.

C. Two time delay modes (which are independently adjustable) shall be provided on re-transfer to normal. One time delay shall be for actual normal power failures and the other for the test mode function. The time delays shall be adjustable from 0 to 60 minutes. Time delay shall be automatically bypassed if the emergency source fails and the normal source is acceptable.

D. A time delay shall be provided on shut down of engine generator for cool down, adjustable from 0 to 60 minutes.

E. A time delay activated output signal shall also be provided to drive an external relay(s) for selective load disconnect control. The controller shall have the ability to activate an adjustable 0 to 5 minute time delay in any of the following modes:

1. Prior to transfer only.
2. Prior to and after transfer.
3. Normal to emergency only.
4. Emergency to normal only.
5. Normal to emergency and emergency to normal.
6. All transfer conditions or only when both sources are available.

F. All time delays shall be adjustable in 1 second increments, except the extended parallel time, which shall be adjustable in .01 second increments.

G. All time delays shall be adjustable by using the LCD display and keypad or with a remote device connected to the serial communications port.

3.04 ADDITIONAL FEATURES

A. A three position momentary-type test switch shall be provided for the *test / automatic / reset* modes. The test position will simulate a normal source failure. The reset position shall bypass the time delays on either transfer to emergency or retransfer to normal.

B. A SPDT contact, rated 5 amps at 30 VDC, shall be provided for a low-voltage engine start signal. The start signal shall prevent dry cranking of the engine by requiring the generator set to reach proper output, and run for the duration of the cool down setting, regardless of whether the normal source restores before the load is transferred.

C. Auxiliary contacts, rated 10 amps, 250 VAC shall be provided consisting of one contact, closed when the ATS is connected to the normal source and one contact closed, when the ATS is connected to the emergency source.

D. LED indicating lights (16 mm industrial grade, type 12) shall be provided; one to indicate when the ATS is connected to the normal source (green) and one to indicate when the ATS is connected to the emergency source (red).

E. LED indicating lights (16 mm industrial grade, type 12) shall be provided and energized by controller outputs. The lights shall provide true source availability of the normal and emergency sources, as determined by the voltage sensing trip and reset settings for each source.

The following features shall be built-in to the controller, but capable of being activated through keypad programming or the serial port only when required by the user:

F. Provide the ability to select “commit/no commit to transfer” to determine whether the load should be transferred to the emergency generator if the normal source restores before

the generator is ready to accept the load.

G. The controller shall be capable of accepting a normally open contact that will allow the transfer switch to function in a non-automatic mode using an external control device.

H. Engine Exerciser - The controller shall provide an internal engine exerciser. The engine exerciser shall allow the user to program up to seven different exercise routines. For each routine, the user shall be able to:

1. Enable or disable the routine.

2. Enable or disable transfer of the load during routine.

3. Set the start time, .
   - time of day
   - day of week
   - week of month (1st, 2nd, 3rd, 4th, alternate or every)

4. Set the duration of the run.

At the end of the specified duration the switch shall transfer the load back to normal and run the generator for the specified cool down period. A 10-year life battery that supplies power to the real time clock in the event of a power loss will maintain all time and date information.

The following feature shall be built - into the controller, but capable of being activated through keypad programming or the communications interface port.

Note: The transfer switch will operate in a non-automatic mode with this feature activated.

I. Terminals shall be provided for a remote contact which opens to signal the ATS to transfer to emergency and for remote contacts which open to inhibit transfer to emergency and/or retransfer to normal. Both of these inhibit signals can be activated through the keypad or serial port.

J. System Status - The controller LCD display shall include a “System Status” screen which shall be readily accessible from any point in the menu by depressing the “ESC” key a maximum of two times. This screen shall display a clear description of the active operating sequence and switch position. For example,

Normal Failed
Load on Normal
TD Normal to Emerg
2min15s

Controllers that require multiple screens to determine system status or display “coded” system status messages, which must be explained by references in the operator’s manual, are not permissible.

K. Self Diagnostics - The controller shall contain a diagnostic screen for the purpose of detecting system errors. This screen shall provide information on the status input signals

to the controller which may be preventing load transfer commands from being completed..

L. Data Logging – The controller shall have the ability to log data and to maintain the last 99 events, even in the event of total power loss. The following events shall be time and date stamped and maintained in a non-volatile memory:`1

1. Event Logging

1. Data and time and reason for transfer normal to emergency.
2. Data and time and reason for transfer emergency to normal.
3. Data and time and reason for engine start.
4. Data and time engine stopped.
5. Data and time emergency source available.
6. Data and time emergency source not available.

2. Statistical Data

1. Total number of transfers.
2. Total number of transfers due to source failure.
3. Total number of days controller is energized.
4. Total number of hours both normal and emergency sources are available.

PART 4 - ADDITIONAL REQUIREMENTS

4.01 WITHSTAND AND CLOSING RATINGS

A. The withstand and closing ratings of the ATS, with any overcurrent device shall be 22,000 RMS symmetrical amperes minimum.

B. The ATS shall be UL listed in accordance with UL 1008 and be labeled in accordance with that standard's 0.025 and 0.05 second, time based ratings. ATSs which are not tested and labeled with time based ratings and have series, or specific breaker ratings only, are not acceptable.

4.02 TESTS AND CERTIFICATION

A. The complete ATS shall be factory tested to ensure proper operation of the individual components and correct overall sequence of operation and to ensure that the operating transfer time, voltage, frequency and time delay settings are in compliance with the specification requirements.

B. The ATS manufacturer shall be certified to ISO 9001:2008 International Quality Standard and the manufacturer shall have third party certification verifying quality assurance in design/development, production, installation and servicing in accordance with ISO 9001:2008

4.03 SERVICE REPRESENTATION

A. The ATS manufacturer shall maintain a national service organization of company-

employed personnel located throughout the contiguous United States. The service center's personnel must be factory trained and must be on call 24 hours a day, 365 days a year.

B. The manufacturer shall maintain records of each switch, by serial number, for a minimum of 20 years.

END OF SECTION

PUMP AND LIFT STATION REHABILITATIONS
PID# PS26-401-608-00

PREPARED FOR

CITY OF ST. PETE BEACH, FLORIDA

DECEMBER 2025

100% DESIGN PLANS

St. Pete Beach
The Sunset Capital of Florida

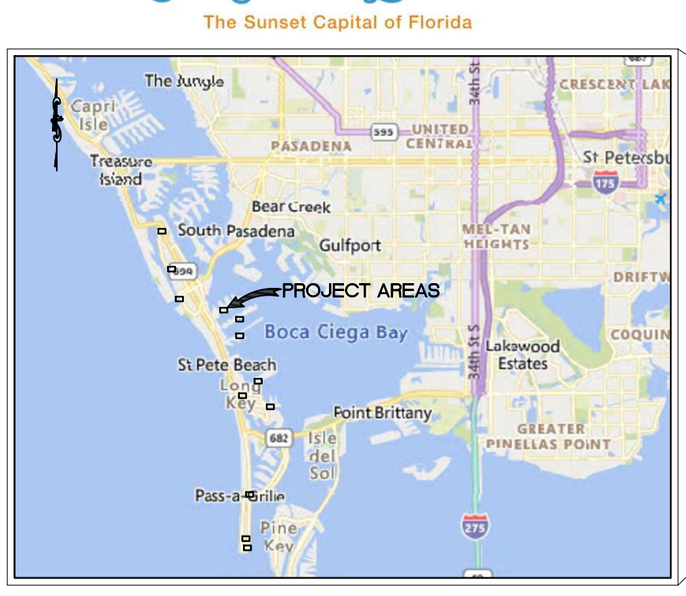

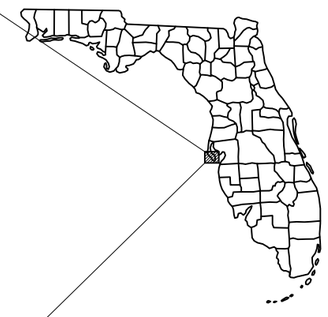

PROJECT VICINITY MAP

UTILITY CONTACTS:

VERIZON WIRELESS
VICTOR SHEARHOUSE
801.364.1063

DUKE ENERGY - ST PETERSBURG
STEPHANIE OLMO
1150 GREENWOOD BLVD
LAKE MARY, FL 32746
407.905.3376

DUKE ENERGY - SUB AQUEOUS
DUKE CUSTOMER SERVICE CENTER
407.629.1010

CHARTER COMMUNICATIONS
DUFFY MCCLELLAND
2850 S. LECANTO HIGHWAY
LECANTO, FL 34461
352.527.2189

FRONTIER COMMUNICATIONS
DANIEL LEILLO
3712 W WALNUT ST
TAMPA, FL 33607
941.504.9662

MCI
MCI INVESTIGATIONS TEAM
400 INTERNATIONAL PKWY
RICHARDSON, TX 75081
800.624.9675 EXT 2

ZAYO GROUP
HENRY KLOBUCAR
130 N MAIN ST
BUTTE, MT 59701
406.496.6510

PINELLAS COUNTY HWY/ENG
JOSEPH PARRISH
22211 US 19 N
CLEARWATER, FL 33765
727.342.0769

TECO PEOPLES GAS - ST PETERSBURG
JOAN DOMNING
8416 PALM RIVER RD
TAMPA, FL 33619
813.743.7164

PINELLAS COUNTY UTILITIES - RECLAIM
14 S FT HARRISON
CLEARWATER, FL 33756
727.453.3611

PINELLAS COUNTY UTILITIES - WATER
14 S FT HARRISON
CLEARWATER, FL 33756
727.453.3611

CITY OF ST PETE BEACH
CAMDEN MILLS
7581 BOCA CIEGA
ST PETE BEACH, FL 33706
727.363.9254

UNITI FIBER LLC
CHARLIE CROFT
107 ST FRANCIS ST, SUITE 1800
MOBILE, AL 36602
251.214.7059

PREPARED BY

Kimley»Horn

© 2025 KIMLEY-HORN AND ASSOCIATES, INC.
200 CENTRAL AVENUE, SUITE 600
ST. PETERSBURG, FL 33701
PHONE (727) 547-3999
WWW.KIMLEY-HORN.COM CA 00000696

KYLE T. MATHENY, P.E.
No. 97287

148404108 PUMP AND LIFT STATION REHABILITATIONS DECEMBER 2025 100% DESIGN PLANS G-01 - COVER SHEET

GENERAL

1. CONTRACTOR SHALL CONTACT MR. CAMDEN MILLS, (727)-363-9254 TO COORDINATE LIFT STATION SHUT DOWN AND STARTUP.
2. CONTRACTOR MUST MAINTAIN SOUND LEVELS BELOW THE LIMITATIONS SET IN ARTICLE IV SECTION 46-132 OF THE CITY OF ST. PETE BEACH'S CODE OF ORDINANCES.
3. THE CONTRACTOR SHALL BE RESPONSIBLE FOR MEETING ALL CONDITIONS AND REQUIREMENTS OF ALL PERMITS AND ALL GOVERNING FEDERAL, STATE, AND LOCAL AGENCIES. THE CONTRACTOR SHALL OBTAIN AND PAY FOR ALL REQUIRED PERMITS THAT ARE NOT PROVIDED IN THE BID DOCUMENTS, AT NO ADDITIONAL COST TO THE OWNER.
4. THE INFORMATION PROVIDED IN THESE PLANS IS SOLELY TO ASSIST THE CONTRACTOR IN ASSESSING THE NATURE AND EXTENT OF THE CONDITIONS WHICH MAY BE ENCOUNTERED DURING THE COURSE OF WORK. ALL CONTRACTORS ARE DIRECTED, PRIOR TO BIDDING, TO CONDUCT WHATEVER INVESTIGATION THEY MAY DEEM NECESSARY TO ARRIVE AT THEIR OWN CONCLUSIONS REGARDING THE ACTUAL CONDITIONS THAT WILL BE ENCOUNTERED, AND UPON WHICH THEIR BIDS WILL BE BASED.
5. THE CONTRACTOR SHALL REVIEW AND VERIFY ALL DIMENSIONS ON THE PLANS AND REVIEW ALL FIELD CONDITIONS THAT MAY AFFECT CONSTRUCTION. SHOULD DISCREPANCIES OCCUR, THE CONTRACTOR SHALL NOTIFY THE ENGINEER TO OBTAIN THE ENGINEER'S CLARIFICATION BEFORE COMMENCING WITH CONSTRUCTION. NO FIELD CHANGES OR DEVIATIONS FROM DESIGN ARE TO BE MADE WITHOUT PRIOR APPROVAL OF THE OWNER AND NOTIFICATION TO THE ENGINEER.
6. AT LEAST 2 FULL BUSINESS DAYS PRIOR TO ANY EXCAVATION, THE CONTRACTOR SHALL CONTACT SUNSHINE STATE ONE CALL OF FLORIDA AT 1-800-432-4770 OR THE NATIONAL 811 ONE CALL NUMBER WHEN APPLICABLE FOR UTILITY LOCATIONS. THE CONTRACTOR SHALL BE RESPONSIBLE FOR COORDINATING WITH ALL UTILITIES FOR THE POSSIBLE RELOCATION OR THE TEMPORARY MOVEMENT OF ANY EXISTING UTILITIES WITHIN THE RIGHTS-OF-WAY.
7. THE CONTRACTOR SHALL INCLUDE IN HIS BID:BY-PASS PUMPING FACILITIES, PUMPS, FITTINGS, LABOR, ETC. AS NECESSARY, BASED ON METHOD AND SEQUENCE OF CONSTRUCTION TO COMPLETE ALL WORK WHILE MAINTAINING SEWER SERVICE OPERATIONS AT ALL TIMES.
8. THE CONTRACTOR SHALL PROVIDE THE OWNER AND ENGINEER A DETAILED BYPASS PLAN FOR APPROVAL PRIOR TO BEGINNING CONSTRUCTION.
9. THE CONTRACTOR SHALL PROVIDE THE OWNER WITH A DETAILED CONSTRUCTION PHASING PLAN FOR APPROVAL, PRIOR TO BEGINNING CONSTRUCTION.
10. THE CONTRACTOR SHALL PROVIDE THE OWNER AND ENGINEER A DETAILED HURRICANE PREPAREDNESS PLAN FOR APPROVAL PRIOR TO BEGINNING CONSTRUCTION.
11. THE CONTRACTOR SHALL FURNISH SHOP DRAWINGS TO THE ENGINEER FOR REVIEW OF ALL PIPE CONNECTIONS, TRANSITIONS, AND SPECIAL APPURTENANCES PRIOR TO FABRICATION OR DELIVERY TO THE JOB SITE.

SAFETY

1. THE CONTRACTOR SHALL BE RESPONSIBLE FOR COMPLIANCE WITH THE FLORIDA TRENCH SAFETY ACT, 90-96, LAWS OF FLORIDA EFFECTIVE OCTOBER 1, 1990 AND THE OCCUPATIONAL SAFETY AND HEALTH ADMINISTRATION EXCAVATION SAFETY STANDARDS, 29 CFR 1926.650, SUBPART P, AS AMENDED. THE CONTRACTOR SHALL INCLUDE IN THE TOTAL BID PRICE ALL COSTS FOR COMPLIANCE WITH THESE REGULATIONS.
2. THE CONTRACTOR SHALL USE SHEET PILING, SHEETING, BRACING, ETC., AS REQUIRED IN ALL EXCAVATION AREAS AND CONFORM TO ALL OSHA REQUIREMENTS.
3. THE CONTRACTOR SHALL USE ALL NECESSARY SAFETY PRECAUTIONS TO AVOID CONTACT WITH OVERHEAD AND UNDERGROUND UTILITIES, POWER LINES, ETC.
4. THESE DRAWINGS DO NOT INCLUDE NECESSARY COMPONENTS FOR CONSTRUCTION SAFETY. THIS EXCLUSION DOES NOT ALLEVIATE THE CONTRACTOR FOR PROVIDING A CONTINUOUS SAFE WORKSPACE.

ENVIRONMENTAL

1. THE CONTRACTOR SHALL PROVIDE AND INSTALL ALL NECESSARY STORM WATER, EROSION, AND SEDIMENTATION CONTROL MEASURES IN ACCORDANCE WITH THE FDEP "FLORIDA STORM WATER, EROSION AND SEDIMENTATION CONTROL INSPECTOR'S MANUAL". IT IS THE RESPONSIBILITY OF THE CONTRACTOR TO CONTROL AND PREVENT EROSION AND TRANSPORT OF SEDIMENT TO SURFACE DRAINS AND TO DITCHES DURING CONSTRUCTION.
2. STOCKPILES SHALL BE PROTECTED AT ALL TIMES BY ON-SITE DRAINAGE CONTROLS WHICH PREVENT EROSION OF THE STOCKPILED MATERIAL. CONTROL OF DUST FROM SUCH STOCKPILES IS REQUIRED, DEPENDING UPON THEIR LOCATION AND THE EXPECTED LENGTH OF TIME THE STOCKPILES WILL BE PRESENT. IN NO CASE SHALL ANY STOCKPILED MATERIAL REMAIN AFTER THIRTY (30) CALENDAR DAYS.
3. STORM WATER INLETS IN THE VICINITY OF THE PROJECT SHALL BE PROTECTED BY SEDIMENT TRAPS SUCH AS SECURED HAY BALES, SOD, STONE, ETC., WHICH SHALL BE MAINTAINED AND MODIFIED AS REQUIRED BY CONSTRUCTION PROGRESS, AND WHICH MUST BE APPROVED BY THE ENGINEER BEFORE INSTALLATION. THIS WILL BE MAINTAINED TO PREVENT DEGRADATION OF THE WATERS OF THE COUNTY AND STATE.
4. SEDIMENT BASINS AND TRAPS, PERIMETER BERMS, SEDIMENT BARRIERS, VEGETATIVE BUFFERS, AND OTHER MEASURES INTENDED TO TRAP SEDIMENT AND/OR PREVENT THE TRANSPORT OF SEDIMENT ONTO ADJACENT PROPERTIES, OR INTO EXISTING BODIES OF WATER, MUST BE INSTALLED, CONSTRUCTED, OR IN THE CASE OF VEGETATIVE BUFFERS, PROTECTED FROM DISTURBANCE, AS A FIRST STEP IN THE LAND ALTERATION PROCESS. SUCH SYSTEMS SHALL BE FULLY OPERATIVE BEFORE ANY OTHER DISTURBANCE OF THE SITE BEGINS. EARTHEN STRUCTURES INCLUDING BUT NOT LIMITED TO BERMS, EARTH FILTERS, DAMS OR DIKES SHALL BE STABILIZED AND PROTECTED FROM DRAINAGE DAMAGE OR EROSION WITHIN ONE (1) WEEK OF INSTALLATION.
5. ALL SWALES, DITCHES, AND CHANNELS LEADING FROM THE SITE SHALL BE PROTECTED FROM SILTATION AND EROSION DURING CONSTRUCTION AND BE SODDED WITHIN THREE (3) DAYS OF EXCAVATION.
6. SOIL DISPLACED BY CONSTRUCTION WILL BE REMOVED. EROSION CONTROL SHALL BE IMPLEMENTED IN AREAS WHICH ARE CONSIDERED ENVIRONMENTALLY SENSITIVE. EROSION CONTROL SYSTEMS SHALL BE REQUIRED FOR ALL WORK WITHIN JURISDICTIONAL AREAS. THESE SYSTEMS MAY INCLUDE STAKED HAY BALES, SILT SCREENS, FILTER FABRIC, AND TURBIDITY SCREENS.
7. ALL EROSION AND POLLUTION CONTROL DEVICES SHALL BE CHECKED REGULARLY, ESPECIALLY AFTER EACH RAINFALL AND SHALL BE CLEANED OUT AND/OR REPAIRED AS REQUIRED.
8. THE CONTRACTOR SHALL NOT ENTER UPON OR IN ANY WAY ALTER WETLAND AREAS THAT MAY BE ON OR NEAR THE CONSTRUCTION SITE. ALL WORK IN THE VICINITY OF OPEN WATER AND/OR WETLANDS IS TO BE PERFORMED IN COMPLIANCE WITH THE ENVIRONMENTAL REGULATIONS AND/OR PERMITS FOR THE SITE. THE CONTRACTOR WILL BE RESPONSIBLE FOR ANY FINES RESULTING FROM HIS VIOLATION OF ANY REGULATIONS OR PERMIT CONDITIONS.
9. CONTRACTOR SHALL PROVIDE PROTECTIVE MATTING, FUEL CONTAINMENT AND ALL OTHER MATERIALS, EQUIPMENT AND LABOR TO PROTECT THE STAGING AREA DURING CONSTRUCTION.
10. CONTRACTOR SHALL, PRIOR TO BEGINNING CONSTRUCTION, SUBMIT A "FUELING SPILL PREVENTION PLAN" THAT SHALL CLEARLY INDICATE HOW FUEL SPILLS WILL BE PREVENTED WHEN FUELING BOTH WITHIN AND OUTSIDE OF THE STAGING AREA.

RIGHT-OF-WAY

1. ALL CONSTRUCTION ACTIVITIES SHALL BE LIMITED TO WITHIN THE CITY OF ST. PETE BEACH RIGHT-OF-WAY AND/OR EASEMENTS SHOWN ON THE DRAWINGS.
2. THE CONTRACTOR SHALL EMPLOY A LAND SURVEYOR REGISTERED IN THE STATE OF FLORIDA TO REFERENCE AND RESTORE PROPERTY CORNER MONUMENTS, PINS, AND LANDMARKS THAT MAY BE DISTURBED BY CONSTRUCTION AT NO ADDITIONAL COST TO THE OWNER.
3. THE CONTRACTOR, PRIOR TO CONSTRUCTION AND RESTRICTING ANY TRAFFIC, MUST OBTAIN A RIGHTS-OF-WAY USE PERMIT AND A TRAFFIC CONTROL PLAN. THE CONTRACTOR SHALL OBTAIN ALL REQUIRED PERMITS FROM OTHER GOVERNMENTAL AGENCIES HAVING RELEVANT JURISDICTION. ALL MAINTENANCE AND PROTECTION OF TRAFFIC SHALL BE IN ACCORDANCE WITH THE APPLICABLE REQUIREMENTS OF THE CURRENT FLORIDA DEPARTMENT OF TRANSPORTATION "MANUAL OF TRAFFIC CONTROL AND SAFE PRACTICES". A TRAFFIC CONTROL PLAN SHALL BE SUPPLIED BY THE CONTRACTOR AT THE PRE-CONSTRUCTION MEETING.
4. THE CONTRACTOR SHALL BE RESPONSIBLE FOR REPLACING ALL DAMAGED STORM WATER STRUCTURES, PIPING, ENTRANCE PIPE AND HEADWALLS WHETHER SHOWN ON THE PLANS OR NOT. THE HEADWALLS SHALL BE REPLACED IN ACCORDANCE WITH F.D.O.T. STANDARDS.
5. IT IS THE RESPONSIBILITY OF THE CONTRACTOR TO ESTABLISH IN THE FIELD THE RIGHT-OF-WAY LINES, BASE LINES, BENCH MARKS (ELEV.), CENTER LINES, AND STATIONING AS REQUIRED TO CONSTRUCT THIS PROJECT.
6. THE CONTRACTOR SHALL COORDINATE THE CUTTING OF DRIVEWAYS WITH THE PROPERTY OWNER PRIOR TO CUT. ALL DRIVEWAYS WILL BE IN PASSABLE CONDITION AT THE END OF THE WORK DAY AND FULLY RESTORED.
7. A RIGHT OF ENTRY AGREEMENT SHALL BE OBTAINED BY THE PROJECT MANAGER FROM THE PROPERTY OWNER BEFORE ANY DRIVEWAY CONSTRUCTION WORK IS DONE OUTSIDE OF THE RIGHT-OF-WAY OR EASEMENT.

UTILITIES

1. LOCATIONS, ELEVATIONS AND DIMENSIONS OF EXISTING UTILITIES, STRUCTURES AND OTHER FEATURES ARE SHOWN TO THE BEST INFORMATION AVAILABLE AT THE TIME OF PREPARATION OF THESE PLANS BUT DO NOT PURPORT TO BE ABSOLUTELY CORRECT. THERE MAY BE OTHER IMPROVEMENTS, UTILITIES, ETC. WHICH ARE WITHIN THE PROJECT AREA AND WHICH HAVE NOT BEEN LOCATED OR IDENTIFIED, MAY NOT BE IN THE EXACT LOCATION SHOWN OR RELOCATED SINCE THE PREPARATION OF THESE PLANS. THE CONTRACTOR SHALL VERIFY, PRIOR TO CONSTRUCTION, THE LOCATIONS, ELEVATIONS AND DIMENSIONS OF ALL EXISTING UTILITIES STRUCTURES AND OTHER FEATURES (WHETHER OR NOT SHOWN ON THE PLANS) THAT MAY EFFECT HIS WORK. ALL EXISTING UTILITIES TO BE EXTENDED, CROSSED OR CONNECTION POINTS SHALL BE EXPOSED PRIOR TO CONSTRUCTION TO VERIFY LOCATION AND ELEVATION. ANY DISCREPANCIES OR CONFLICTS FOUND SHALL BE BROUGHT TO THE ENGINEER'S ATTENTION FOR RESOLUTION.
2. THE CONTRACTOR SHALL PROTECT ALL EXISTING STRUCTURES, WATER AND SEWER LINES, STORM DRAINS, UTILITIES, DRIVEWAYS, SIDEWALKS, SIGNS, MAIL BOXES, FENCES, TREES, LANDSCAPING, AND ANY OTHER IMPROVEMENT OR FACILITY IN THE CONSTRUCTION AREA. THE CONTRACTOR SHALL REPAIR AND/OR REPLACE ANY DAMAGED ITEM DUE TO HIS CONSTRUCTION ACTIVITIES TO EQUAL OR BETTER THAN PRE-CONSTRUCTION CONDITIONS AT NO ADDITIONAL COST TO THE OWNER.
3. THE CONTRACTOR SHALL USE APPROPRIATE TECHNIQUES, AS APPROVED, RECOMMENDED OR OFFERED BY DUKE ENERGY TO PREVENT UNDERMINING OF POWER POLES DURING CONSTRUCTION. IF HOLDING OF POWER POLES IS RECOMMENDED OR REQUIRED BY THE UTILITY, THE CONTRACTOR SHALL COORDINATE THIS ACTIVITY WITH THE UTILITY AND BEAR ALL RELATED COSTS.
4. ANY TEMPORARY SHUTDOWNS FOR MODIFICATIONS OF EXISTING UTILITY SYSTEMS THAT MUST REMAIN IN SERVICE DURING CONSTRUCTIONS SHALL BE KEPT TO A MINIMUM AND SHALL BE COORDINATED WITH AND APPROVED BY THE CITY OF ST. PETE BEACH UTILITY OPERATIONS DEPARTMENT IN ACCORDANCE WITH THE CONTRACT DOCUMENTS. IT IS NOTED THAT TEMPORARY SHUTDOWNS MAY BE RESTRICTED TO CERTAIN HOURS AT ANY TIME OF THE DAY OR NIGHT AND WILL BE COMPLETED AT NO ADDITIONAL COST TO THE OWNER.
5. FOR WORK BEING DONE ON EXISTING SANITARY SEWER LINES, THE CONTRACTOR SHALL BE RESPONSIBLE FOR MAINTAINING THE FLOW OF ALL SEWAGE DURING CONSTRUCTION, WHICH MAY REQUIRE BY-PASS PUMPING AND/OR PUMPER TRUCKS. THE CONTRACTOR SHALL SUBMIT A DETAILED BY-PASS PUMPING PLAN.
6. THE CONTRACTOR SHALL BE RESPONSIBLE FOR COORDINATING WITH THE JURISDICTIONAL BODIES AND UTILITY COMPANIES LISTED ON THE COVER SHEET OF THIS PLAN SET.

RESTORATION

1. ALL RESTORATION WORK PERFORMED THROUGHOUT THE PROJECT SHALL CONFORM TO EXISTING LINES AND GRADES UNLESS SHOWN OTHERWISE.
2. ALL DISTURBED GRASSED AREAS SHALL BE SODDED OR SEEDED UNLESS OTHERWISE INDICATED, THE TYPE OF SOD USED TO REPLACE OWNER MAINTAINED AREAS IN RIGHT-OF-WAY SHALL BE COORDINATED WITH THE PROPERTY OWNER.
3. ALL CONCRETE THRUST BLOCKS INSTALLED FOR TESTING PURPOSES AND NOT REQUIRED FOR THE OPERATION OF THE PIPELINE SHALL BE REMOVED AND DISPOSED OF BY THE CONTRACTOR, PRIOR TO FINAL ACCEPTANCE, AT NO ADDITIONAL COST TO THE OWNER.
4. ASPHALT DRIVES THAT ARE CUT SHALL BE RESTORED PER SPECIFICATIONS AND/OR DETAILS
5. WHENEVER A PERMANENT ROADWAY SURFACE IS NOT PLACED IMMEDIATELY AFTER BACKFILLING AND COMPACTION OF THE NEWLY INSTALLED PIPE LINE IN AREAS WHERE TRAFFIC MUST PASS, THE CONTRACTOR SHALL INSTALL A TEMPORARY SURFACE CONSISTING OF NINE INCHES OF COMPACTED LIME ROCK BASE AND A COAT OF ASPHALT EMULSION. PERMANENT ROADWAY REPAIR SHALL BE PERFORMED A MAXIMUM OF TWENTY-ONE CALENDAR DAYS AFTER THE INITIAL OPEN CUTTING.
6. RESTORATION OF CURBS, DRIVEWAYS, SIDEWALKS, AND PLACEMENT OF SOD SHALL BE COMPLETED WITHIN FORTY-FIVE CALENDAR DAYS OF INITIAL DISTURBANCE, OR TWENTY-ONE CALENDAR DAYS OF SUBSTANTIAL COMPLETION, WHICHEVER OCCURS FIRST.
7. ALL EXISTING FENCES DISTURBED DURING CONSTRUCTION SHALL BE REPAIRED OR REPLACED AND REINSTALLED BY THE CONTRACTOR AT NO ADDITIONAL COST TO THE OWNER UNLESS SHOWN TO BE REMOVED ON CONSTRUCTION PLANS.

CONSTRUCTION

1. THE EXHAUST SYSTEM OF ALL GASOLINE AND DIESEL ENGINES SHALL BE EQUIPPED WITH MUFFLERS THAT MEET THE EQUIPMENT MANUFACTURERS REQUIREMENTS FOR NOISE SUPPRESSION. THE CONTRACTOR SHALL INSTALL NOISE ABATEMENT BAFFLES POSITIONED TO BREAK LINE-OF-SITE FROM THE NOISE SOURCE TO AFFECTED RESIDENCES, AS APPROVED BY THE ENGINEER.
2. NO MATERIAL SHALL BE STOCKPILED IN ROADWAYS. ALL DIRT AND DEBRIS SHALL BE REMOVED FROM THE JOB SITE DAILY. ROADS SHALL BE SWEPT DAILY AS PART OF DAILY CLEAN UP.
3. THE CONTRACTOR IS TO CONTROL ALL FUGITIVE DUST ORIGINATING ON THIS PROJECT BY WATERING OR OTHER METHODS AS REQUIRED.
4. INGRESS AND EGRESS TO ALL THE PROPERTIES IN THE CONSTRUCTION AREA SHALL BE MAINTAINED AT ALL TIMES.
5. PRIOR APPROVAL WILL BE REQUIRED FOR REMOVAL OF ANY TREE WITHIN THE CONSTRUCTION AREA.
6. THE CONTRACTOR SHALL PROVIDE ALL DEWATERING EQUIPMENT NECESSARY TO KEEP ALL EXCAVATIONS DRY. DEWATERING IS REQUIRED TO 18" BELOW TRENCH BOTTOM.
7. ALL PIPING AND FITTINGS USED ON THIS PROJECT SHALL BE AS NOTED ON THE PLANS AND IN THE CONTRACT DOCUMENT AND SHALL BE INSTALLED TO THE LINES AND GRADES SHOWN ON THE PLANS AND PROFILES.
8. ALL PIPE AND FITTINGS SHALL BE INSTALLED AS RECOMMENDED BY THE MANUFACTURER AND ALL PIPE JOINTS SHALL BE RESTRAINED.
9. ALL FITTINGS FOR PRESSURE CLASS-RATED PIPE SHALL BE RESTRAINED DUCTILE IRON & POLY WRAPPED. RESTRAINED LENGTHS OF PIPE SHALL ADHERE TO THE REQUIREMENTS AS SHOWN ON THE DETAIL SHEETS.
10. WHERE IT IS NECESSARY TO DEFLECT PIPE EITHER HORIZONTALLY OR VERTICALLY, PIPE DEFLECTION SHALL NOT EXCEED 75% OF THE MANUFACTURER'S MAXIMUM ALLOWABLE RECOMMENDED DEFLECTION.
11. ALL ROCKS OR STONES LARGER THAN SIX INCH DIAMETER SHALL BE REMOVED FROM THE BACKFILL MATERIAL. BACKFILL MATERIAL PLACED WITHIN ONE FOOT OF PIPING AND APPURTENANCES SHALL NOT CONTAIN ANY STONES LARGER THAN TWO INCH DIAMETER.
12. ALL NEW PIPE LINES SHALL BE PIG CLEANED (4" AND LARGER), FLUSHED, PRESSURE TESTED AND CERTIFIED PRIOR TO TIE-INS TO EXISTING FACILITIES. THE CONTRACTOR WILL BE ALLOWED TO USE TEMPORARY PLUGS FOR PIG CLEANING AND PRESSURE TESTING.
13. ALL TEST POINT PIPING SHALL BE CUT LOOSE FROM THE CORPORATION STOP AND COMPLETELY REMOVED AND DISPOSED OF BY THE CONTRACTOR PRIOR TO FINAL ACCEPTANCE. A CORPORATION STOP PLUG SHALL BE INSTALLED AND THE CORPORATION STOP SHALL REMAIN IN PLACE.
14. ALL EXISTING MAINS THAT ARE BEING REPLACED SHALL BE ABANDONED IN PLACE UPON ACCEPTANCE AND ACTIVATION OF THE NEW MAINS. ABANDONED MAINS SHALL BE CUT, FILLED WITH GROUT, AND CAPPED.
15. FIELD CONDITIONS MAY NECESSITATE MINOR ALIGNMENT AND GRADE DEVIATION OF THE PROPOSED UTILITIES TO AVOID OBSTACLES, AS ORDERED BY THE ENGINEER.

TRAFFIC CONTROL NOTES

1. TRAFFIC SHALL BE MAINTAINED IN ACCORDANCE WITH FDOT STANDARD PLANS INDEX 102 FOR MAINTENANCE OF TRAFFIC. DEVIATIONS FROM THE FDOT STANDARD PLANS INDEX REQUIRE A SIGNED AND SEALED MOT PLAN BE PROVIDED BY THE CONTRACTOR PRIOR TO BEGINNING CONSTRUCTION.
2. CONTRACTOR TO COORDINATE MOT FOR ALL CONCURRENT PROJECTS IN CONSTRUCTION WITHIN THE PROJECT AREA TO ENSURE CONFLICTS BETWEEN OVERLAPPING MOT PLANS DO NOT OCCUR.
3. CONTRACTOR TO COORDINATE WITH PINELLAS COUNTY SHERIFF'S OFFICE TO REDUCE UNLAWFUL USE OF ROADWAY DURING CONSTRUCTION.
4. ALL EXISTING PAVEMENT MARKINGS OUTSIDE THE CONSTRUCTION LIMITS THAT HAVE BEEN ALTERED BECAUSE OF CONSTRUCTION OPERATIONS SHALL BE REPLACED UPON THE COMPLETION OF THE PROJECT AT THE CONTRACTORS EXPENSE.
5. PEDESTRIANS, BICYCLES, AND WHEELCHAIRS:
   AT THE END OF EACH WORKDAY OR WHENEVER THE WORK ZONE BECOMES INACTIVE, ANY DROP-OFF ADJACENT TO A SIDEWALK SHALL BE BACKFILLED AT A SLOPE NOT TO EXCEED 1:4, OR SHALL BE PROTECTED IN ACCORDANCE WITH STANDARD PLANS INDEX 102 FOR MAINTENANCE OF TRAFFIC.
6. THE CONTRACTOR SHALL BE RESPONSIBLE FOR THE IMMEDIATE REMOVAL OF STORMWATER FROM THE ROADWAYS UTILIZED FOR TRAFFIC CONTROL IN A MANNER APPROVED BY THE ENGINEER.
7. ONE PORTABLE VARIABLE MESSAGE SIGN SHALL BE USED IN ADVANCE OF EACH LANE CLOSURE. THE FOLLOWING ARE SUGGESTED MESSAGES TO USE IN THE APPROPRIATE SITUATIONS:
   MESSAGE 1
   "RIGHT" OR "CENTER" OR "LEFT"
   "LANE" OR "LANE" OR "LANE"
   "CLOSED" OR "CLOSED" OR "CLOSED"
8. AT THE END OF EACH WORKING DAY'S ACTIVITY, TEMPORARY PAVEMENT MARKINGS AND TEMPORARY RPM'S SHALL BE INSTALLED PRIOR TO OPENING THE LANES UP FOR TRAFFIC.
9. ALL PAVEMENT MARKINGS, SIGNS, MARKERS, CHANNELIZATION REQUIRED TO PHASE WORK OR SHIFT TRAFFIC, SHALL UTILIZE STANDARD PLAN INDICES FOR PLACEMENT.
10. THE CONTRACTOR SHALL RESTRICT THE OPERATIONS SO THAT THE FIRST LIFT OF ASPHALT IS PLACED ON THE SAME DAY THAT THE LANES ARE MILLED, BEFORE OPENING THE LANES TO TRAFFIC. INSTALL TEMPORARY PAVEMENT MARKINGS AFTER THE FIRST LIFT AND PRIOR TO OPENING.
11. THE CONTRACTOR IS RESPONSIBLE TO RETIME THE TRAFFIC SIGNALS WITHIN THE PROJECT LIMITS (INCLUDING LIMITS OF WORK ZONE TRAFFIC CONTROL) THAT ARE POTENTIALLY AFFECTED DURING VARIOUS PHASES OF CONSTRUCTION.

LEGEND

RIGHT-OF-WAY	
EXISTING 4" FORCE MAIN	XFM-04 XFM-04
EXISTING 6" FORCE MAIN	XFM-06 XFM-06
EXISTING 8" FORCE MAIN	XFM-08 XFM-08
EXISTING 8" SANITARY SEWER	XSS-08 XSS-08
EXISTING 10" SANITARY SEWER	XSS-10 XSS-10
EXISTING 12" STORM	XST-12 XST-12
EXISTING 15" STORM	XST-15 XST-15
EXISTING 18" STORM	XST-18 XST-18
EXISTING 24" STORM	XST-24 XST-24
EXISTING 30" STORM	XST-30 XST-30
EXISTING 36" STORM	XST-36 XST-36
EXISTING RECLAIMED MAIN	X RCW X RCW
EXISTING 4" RECLAIMED MAIN	X RCW 04 X RCW 04
EXISTING 16" RECLAIMED MAIN	X RCW 16 X RCW 16
EXISTING WATER MAIN	XWT XWT
EXISTING 2" WATER MAIN	XWT02 XWT02
EXISTING 16" WATER MAIN	XWT16 XWT16
EXISTING OVERHEAD COMMUNICATIONS	XOHW XOHW
EXISTING OVERHEAD ELECTRIC	X OE X OE
EXISTING GAS MAIN	XGAS XGAS
EXISTING BURIED TELEPHONE	XTEL XTEL
EXISTING BURIED COMMUNICATIONS	XUGC XUGC
EXISTING BURIED ELECTRIC	BE BE
PROPOSED 6' VINYL FENCING	X X X X
PROPOSED 2" RECLAIMED MAIN (OPEN CUT)	PRW02 PRW02
PROPOSED 2" WATER MAIN (OPEN CUT)	PWT02 PWT02
EXISTING STORM MANHOLE	D
EXISTING SANITARY SEWER MANHOLE	S
PROPOSED AIR RELEASE VALVE ASSEMBLY (ARV)	A
PROPOSED ELECTRICAL EQUIPMENT RACK	
PROPOSED CONCRETE	
TO BE DEMOLISHED	

SHEET LIST TABLE

SHEET NUMBER	SHEET TITLE
G-01	COVER SHEET
G-02	CIVIL GENERAL NOTES
G-03	KEY SHEET
C-01	LIFT STATION 4 REHABILITATION SITE PLAN
C-02	LIFT STATION 5 REHABILITATION SITE PLAN
C-03	LIFT STATION 9 REHABILITATION SITE PLAN
C-04	LIFT STATION 10 REHABILITATION SITE PLAN
C-05	LIFT STATION 11 REHABILITATION SITE PLAN
C-06	LIFT STATION 12 REHABILITATION SITE PLAN
C-07	LIFT STATION 13 REHABILITATION SITE PLAN
C-08	LIFT STATION 14 REHABILITATION SITE PLAN
C-09	LIFT STATION 15 REHABILITATION SITE PLAN
C-10	STORMWATER LIFT STATION 35 REHABILITATION SITE PLAN
D-01	CIVIL DETAILS
D-02	CIVIL DETAILS
S-0.1	STRUCTURAL GENERAL NOTES
S-0.2	STRUCTURAL GENERAL NOTES
S-1.0	ELEVATED GENERATOR PLATFORM DETAILS
S-1.1	ELEVATED GENERATOR PLATFORM DETAILS
S-1.2	STRUCTURAL - STAIR DETAILS
E-01	ELECTRICAL LEGEND
E-02	LIFT STATION 4 REHABILITATION ELECTRICAL SITE PLAN
E-03	LIFT STATION 4 REHABILITATION ELECTRICAL ONE-LINE DIAGRAM
E-04	LIFT STATION 5 REHABILITATION ELECTRICAL SITE PLAN
E-05	LIFT STATION 5 REHABILITATION ELECTRICAL ONE-LINE DIAGRAM
E-06	LIFT STATION 9 REHABILITATION ELECTRICAL SITE PLAN
E-07	LIFT STATION 9 REHABILITATION ELECTRICAL ONE-LINE DIAGRAM
E-08	LIFT STATION 10 REHABILITATION ELECTRICAL SITE PLAN
E-09	LIFT STATION 10 REHABILITATION ELECTRICAL ONE-LINE DIAGRAM
E-10	LIFT STATION 11 REHABILITATION ELECTRICAL SITE PLAN
E-11	LIFT STATION 11 REHABILITATION ELECTRICAL ONE-LINE DIAGRAM
E-12	LIFT STATION 12 REHABILITATION ELECTRICAL SITE PLAN
E-13	LIFT STATION 12 REHABILITATION ELECTRICAL ONE-LINE DIAGRAM
E-14	LIFT STATION 13 REHABILITATION ELECTRICAL SITE PLAN
E-15	LIFT STATION 13 REHABILITATION ELECTRICAL ONE-LINE DIAGRAM
E-16	LIFT STATION 14 REHABILITATION ELECTRICAL SITE PLAN
E-17	LIFT STATION 14 REHABILITATION ELECTRICAL ONE-LINE DIAGRAM
E-18	LIFT STATION 15 REHABILITATION ELECTRICAL SITE PLAN
E-19	LIFT STATION 15 REHABILITATION ELECTRICAL ONE-LINE DIAGRAM
E-20	STORMWATER LS 35 REHABILITATION ELECTRICAL SITE PLAN
E-21	STORMWATER LS 35 REHABILITATION ELECTRICAL ONE-LINE DIAGRAM
E-22	ELECTRICAL EQUIPMENT RACK - ATL
E-23	ELEVATED ELECTRICAL EQUIPMENT RACK - ATL
E-24	ELEVATED ELECTRICAL EQUIPMENT RACK - VFD
E-25	ELECTRICAL EQUIPMENT RACK - RVSS
E-26	PUMP CONTROL PANEL LAYOUT - ATL
E-27	PUMP CONTROL PANEL WIRING DIAGRAM - ATL
E-28	PUMP CONTROL PANEL WIRING DIAGRAM - ATL
E-29	PUMP CONTROL PANEL WIRING DIAGRAM - ATL
E-30	PUMP CONTROL PANEL LAYOUT - VFD
E-31	PUMP CONTROL PANEL WIRING DIAGRAM - VFD
E-32	PUMP CONTROL PANEL WIRING DIAGRAM - VFD
E-33	PUMP CONTROL PANEL WIRING DIAGRAM - VFD
E-34	PUMP CONTROL PANEL WIRING DIAGRAM - VFD
E-35	PUMP CONTROL PANEL LAYOUT - RVSS
E-36	PUMP CONTROL PANEL WIRING DIAGRAM - RVSS
E-37	PUMP CONTROL PANEL WIRING DIAGRAM - RVSS
E-38	PUMP CONTROL PANEL WIRING DIAGRAM - RVSS
E-39	PUMP CONTROL PANEL WIRING DIAGRAM - RVSS
E-40	ELECTRICAL DETAILS
E-41	ELECTRICAL DETAILS

GROUNDWATER / DEWATERING NOTE:
THE PRESENCE OF GROUNDWATER SHOULD BE ANTICIPATED ON THIS PROJECT. CONTRACTOR'S BID SHALL INCLUDE CONSIDERATION FOR THIS ISSUE. WHEN PERFORMING GRADING OPERATIONS DURING PERIODS OF WET WEATHER, PROVIDE ADEQUATE DEWATERING, DRAINAGE AND GROUND WATER MANAGEMENT TO CONTROL MOISTURE OF SOILS.

811 KNOW WHAT'S BELOW. CALL BEFORE YOU DIG. 48 hrs. (2 Full Days, Not Inc. Sat., Sun., Holidays) www.callsunshine.com

No.	Revisions	Date	By

Kimley»Horn
© 2025 KIMLEY-HORN AND ASSOCIATES, INC.
200 CENTRAL AVENUE, SUITE 600
ST. PETERSBURG, FL 33701
P: 727 547 3999
WWW.KIMLEY-HORN.COM REGISTRY NO. 35106

DESIGN ENGINEER: KYLE T. MATHENY, P.E.
FL LICENSE NUMBER 97287
DATE:

SCALE: AS NOTED
DESIGN: KTM
DRAWN: JTS
CHECKED: SNH

CIVIL GENERAL NOTES

CITY OF ST. PETE BEACH
PUMP & LIFT STATION REHABILITATIONS
PID# PS26-401-608-00
PINELLAS COUNTY FLORIDA

DATE: NOVEMBER 2025
PROJECT NO. 148404108
SHEET NUMBER G-02

LIFT STATION REHABILITATIONS	
LIFT STATION #	NEAREST ADDRESS
LS #4	1901 PASS-A-GRILLE WAY ST. PETE BEACH, FL 33706
LS #5	600 PASS-A-GRILLE WAY ST. PETE BEACH, FL 33706
LS #9	1360 BOCA CIEGA ISLE DR. ST. PETE BEACH, FL 33706
LS #10	7398 SUNSET WAY ST. PETE BEACH, FL 33706
LS #11	490 82ND AVENUE ST. PETE BEACH, FL 33706
LS #12	401 93RD AVENUE ST. PETE BEACH, FL 33706
LS #13	5411 PALI WAY ST. PETE BEACH, FL 33706
LS #14	500 64TH AVENUE ST. PETE BEACH, FL 33706
LS #15	650 59TH AVENUE ST. PETE BEACH, FL 33706
SW LS #35	208 PASS-A-GRILLE WAY ST. PETE BEACH, FL 33706



GROUNDWATER / DEWATERING NOTE:
THE PRESENCE OF GROUNDWATER SHOULD BE ANTICIPATED ON THIS PROJECT. CONTRACTOR'S BID SHALL INCLUDE CONSIDERATION FOR THIS ISSUE. WHEN PERFORMING GRADING OPERATIONS DURING PERIODS OF WET WEATHER, PROVIDE ADEQUATE DEWATERING, DRAINAGE AND GROUND WATER MANAGEMENT TO CONTROL MOISTURE OF SOILS.

811 KNOW WHAT'S BELOW ALWAYS CALL 811 BEFORE YOU DIG
It's fast. It's free. It's the law.
www.callsunshine.com

No.	Revisions	Date	By

Kimley»Horn
© 2025 KIMLEY-HORN AND ASSOCIATES, INC.
200 CENTRAL AVENUE, SUITE 600
ST. PETERSBURG, FL 33701
P: 727 547 3999
WWW.KIMLEY-HORN.COM REGISTRY NO. 35106

DESIGN ENGINEER:
KYLE T. MATHENY, P.E.
FL LICENSE NUMBER
97287
DATE:

SCALE: AS NOTED
DESIGN: KTM
DRAWN: JTS
CHECKED: SNH

KEY SHEET

CITY OF ST. PETE BEACH
PUMP & LIFT STATION
REHABILITATIONS
PID# PS26-401-608-00
PINELLAS COUNY FLORIDA

DATE:
NOVEMBER 2025

PROJECT NO.
148404108

SHEET NUMBER
G-03

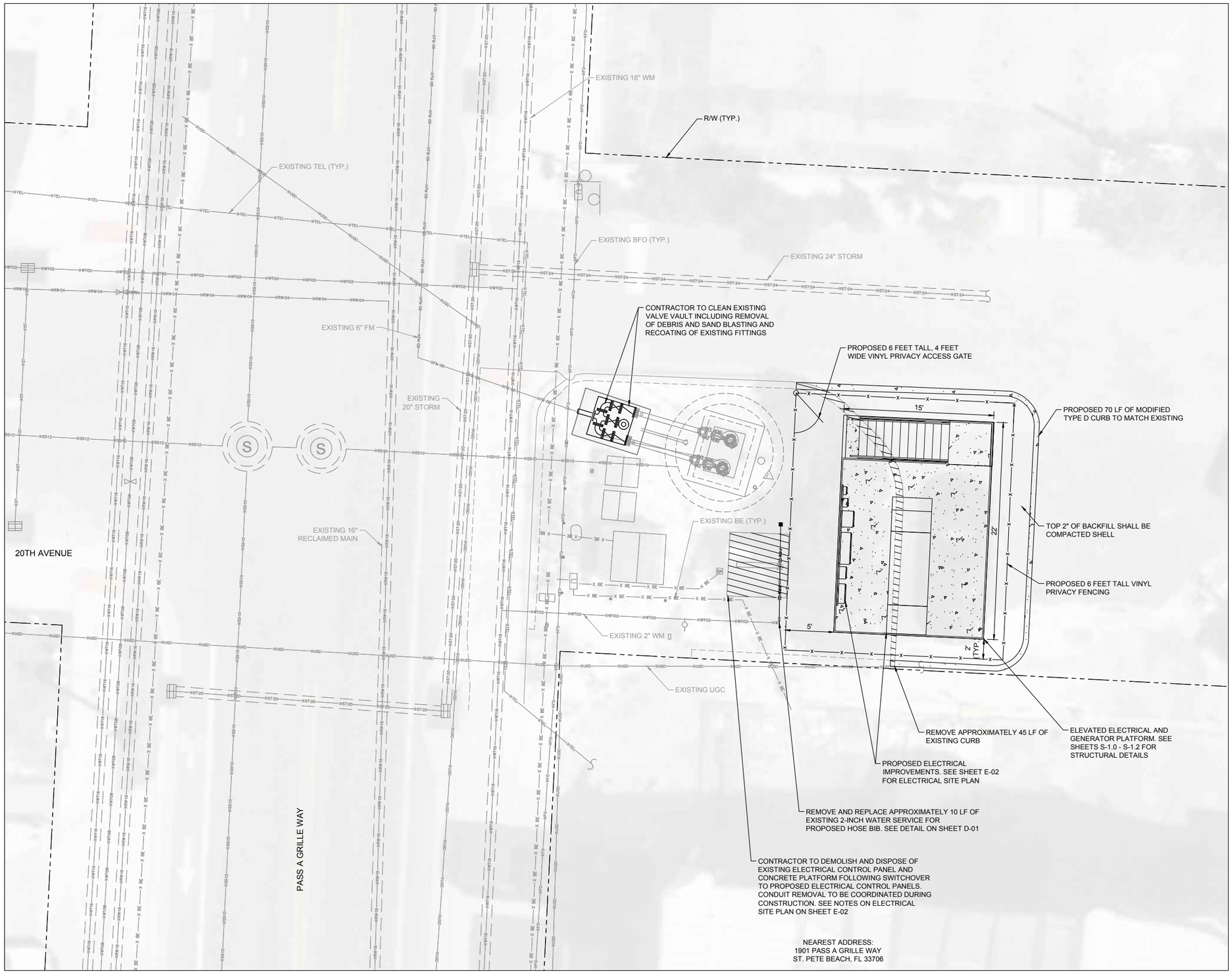

NEAREST ADDRESS:
1901 PASS A GRILLE WAY
ST. PETE BEACH, FL 33706

NORTH

GRAPHIC SCALE IN FEET
0 2.5 5 10

GENERAL NOTES:

1. CONTRACTOR SHALL FIELD VERIFY EXISTING CONDITIONS PRIOR TO BEGINNING CONSTRUCTION AND ORDERING EQUIPMENT. CONTRACTOR SHALL NOTIFY ENGINEER OF DISCREPANCIES
2. CONTRACTOR SHALL TAKE ALL PRECAUTIONARY MEASURES NECESSARY TO PROTECT EXISTING EQUIPMENT, UTILITIES, STRUCTURES, AND PERSONNEL FROM DAMAGE OR INJURY DURING CONSTRUCTION.
3. CONSTRUCTION SEQUENCE SHALL BE COORDINATED TO AVOID ANY FLOW INTERRUPTIONS.
4. ALL EXISTING MECHANICAL PIPING AND EQUIPMENT REMOVED SHALL BE SALVAGED PER SPECIFICATIONS.
5. CONTRACTOR IS RESPONSIBLE FOR DISPOSAL OF DEMOLISHED MATERIAL. DISPOSAL SHALL BE IN ACCORDANCE WITH ALL LOCAL, STATE, AND FEDERAL REGULATIONS.
6. PRESSURE WASHING AND CLEANING OF EXISTING WET WELL SHALL BE COMPLETED FOLLOWING EQUIPMENT REMOVAL AND BYPASSING OF THE LIFT STATION.
7. BYPASSING WILL BE REQUIRED FOR CONSTRUCTION. CONTRACTOR TO SUBMIT BY PASSING PLAN PRIOR TO BEGINNING CONSTRUCTION.
8. CONTRACTOR TO CLEAR AND GRUB AS NECESSARY FOR PROPOSED IMPROVEMENTS INCLUDING ELEVATED PLATFORM, SITE FENCING, AND PIPING/CONDUIT INSTALLATION
9. CONTRACTOR TO VERIFY SIZES PRIOR TO ORDERING MATERIALS

LEGEND

R/W	
PROPOSED 6' VINYL FENCING	
PROPOSED 2" RECLAIMED MAIN (OPEN CUT)	PRW-02
PROPOSED AIR RELEASE VALVE ASSEMBLY (ARV)	A
PROPOSED CONCRETE	
TO BE DEMOLISHED	

GROUNDWATER / DEWATERING NOTE:
THE PRESENCE OF GROUNDWATER SHOULD BE ANTICIPATED ON THIS PROJECT. CONTRACTOR'S BID SHALL INCLUDE CONSIDERATION FOR THIS ISSUE. WHEN PERFORMING GRADING OPERATIONS DURING PERIODS OF WET WEATHER, PROVIDE ADEQUATE DEWATERING, DRAINAGE AND GROUND WATER MANAGEMENT TO CONTROL MOISTURE OF SOILS.

811 Know what's below. Call before you dig. Visit it's free. It's the law. www.callsunshine.com

No.	Revisions	Date	By

Kimley»Horn

© 2025 KIMLEY-HORN AND ASSOCIATES, INC.
200 CENTRAL AVENUE, SUITE 600
ST. PETERSBURG, FL 33701
P: 727 547 3999
WWW.KIMLEY-HORN.COM REGISTRY NO. 35106

DESIGN ENGINEER: KYLE T. MATHENY, P.E.
FL LICENSE NUMBER 97287
DATE:

SCALE: AS NOTED
DESIGN: KTM
DRAWN: JTS
CHECKED: SNH

LIFT STATION 4
REHABILITATION SITE PLAN

CITY OF ST. PETE BEACH
PUMP & LIFT STATION
REHABILITATIONS
PID# PS26-401-608-00
PINELLAS COUNTY FLORIDA

DATE:
DECEMBER 2025

PROJECT NO.
148404108

SHEET NUMBER
C-01

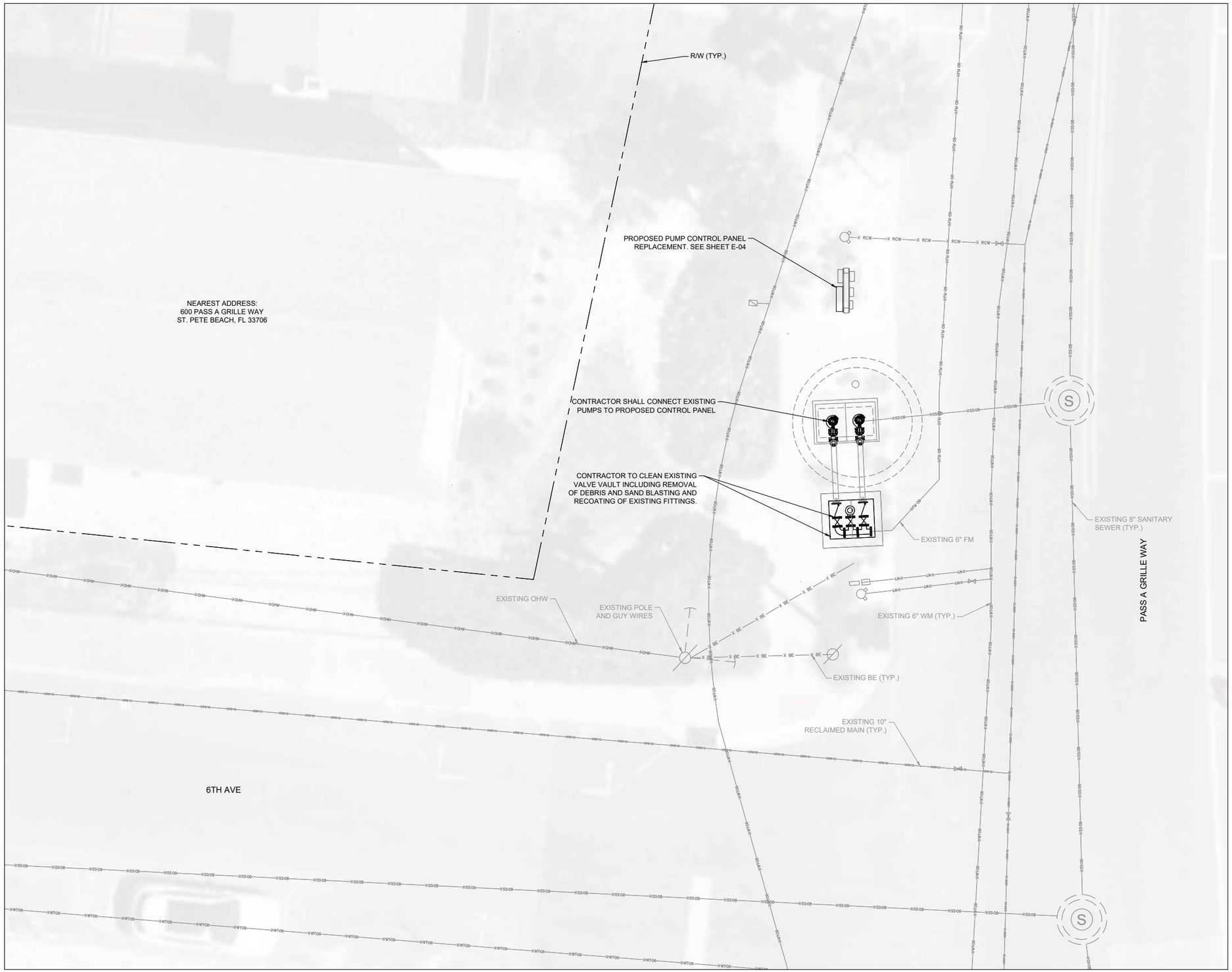

NORTH

GRAPHIC SCALE IN FEET
0 2.5 5 10

GENERAL NOTES:

1. CONTRACTOR SHALL FIELD VERIFY EXISTING CONDITIONS PRIOR TO BEGINNING CONSTRUCTION AND ORDERING EQUIPMENT. CONTRACTOR SHALL NOTIFY ENGINEER OF DISCREPANCIES
2. CONTRACTOR SHALL TAKE ALL PRECAUTIONARY MEASURES NECESSARY TO PROTECT EXISTING EQUIPMENT, UTILITIES, STRUCTURES, AND PERSONNEL FROM DAMAGE OR INJURY DURING CONSTRUCTION.
3. CONSTRUCTION SEQUENCE SHALL BE COORDINATED TO AVOID ANY FLOW INTERRUPTIONS.
4. ALL EXISTING MECHANICAL PIPING AND EQUIPMENT REMOVED SHALL BE SALVAGED PER SPECIFICATIONS.
5. CONTRACTOR IS RESPONSIBLE FOR DISPOSAL OF DEMOLISHED MATERIAL. DISPOSAL SHALL BE IN ACCORDANCE WITH ALL LOCAL, STATE, AND FEDERAL REGULATIONS.
6. PRESSURE WASHING AND CLEANING OF EXISTING WET WELL SHALL BE COMPLETED FOLLOWING EQUIPMENT REMOVAL AND BYPASSING OF THE LIFT STATION.
7. BYPASSING WILL BE REQUIRED FOR CONSTRUCTION. CONTRACTOR TO SUBMIT BY PASSING PLAN PRIOR TO BEGINNING CONSTRUCTION.
8. CONTRACTOR TO CLEAR AND GRUB AS NECESSARY FOR PROPOSED IMPROVEMENTS INCLUDING ELEVATED PLATFORM, SITE FENCING, AND PIPING/CONDUIT INSTALLATION
9. CONTRACTOR TO VERIFY SIZES PRIOR TO ORDERING MATERIALS

LEGEND
R/W
PROPOSED 6' VINYL FENCING
PROPOSED 2" RECLAIMED MAIN (OPEN CUT)
PROPOSED AIR RELEASE VALVE ASSEMBLY (ARV)
PROPOSED CONCRETE
TO BE DEMOLISHED

GROUNDWATER / DEWATERING NOTE:
THE PRESENCE OF GROUNDWATER SHOULD BE ANTICIPATED ON THIS PROJECT. CONTRACTOR'S BID SHALL INCLUDE CONSIDERATION FOR THIS ISSUE. WHEN PERFORMING GRADING OPERATIONS DURING PERIODS OF WET WEATHER, PROVIDE ADEQUATE DEWATERING, DRAINAGE AND GROUND WATER MANAGEMENT TO CONTROL MOISTURE OF SOILS.

811 Know what's below. Call before you dig. Sunshine811.com

No.	Revisions	Date	By

Kimley»Horn

© 2025 KIMLEY-HORN AND ASSOCIATES, INC.
200 CENTRAL AVENUE, SUITE 600
ST. PETERSBURG, FL 33701
P: 727 547 3999
WWW.KIMLEY-HORN.COM REGISTRY NO. 35106

DESIGN ENGINEER:
KYLE T. MATHENY, P.E.
FL LICENSE NUMBER
97287
DATE:

SCALE: AS NOTED
DESIGN: KTM
DRAWN: JTS
CHECKED: SNH

LIFT STATION 5
REHABILITATION SITE PLAN

CITY OF ST. PETE BEACH
PUMP & LIFT STATION
REHABILITATIONS
PID# PS26-401-608-00
PINELLAS COUNY FLORIDA

DATE:
NOVEMBER 2025

PROJECT NO.
148404108

SHEET NUMBER
C-02



NORTH

GRAPHIC SCALE IN FEET
0 2.5 5 10

GENERAL NOTES:

1. CONTRACTOR SHALL FIELD VERIFY EXISTING CONDITIONS PRIOR TO BEGINNING CONSTRUCTION AND ORDERING EQUIPMENT. CONTRACTOR SHALL NOTIFY ENGINEER OF DISCREPANCIES
2. CONTRACTOR SHALL TAKE ALL PRECAUTIONARY MEASURES NECESSARY TO PROTECT EXISTING EQUIPMENT, UTILITIES, STRUCTURES, AND PERSONNEL FROM DAMAGE OR INJURY DURING CONSTRUCTION.
3. CONSTRUCTION SEQUENCE SHALL BE COORDINATED TO AVOID ANY FLOW INTERRUPTIONS.
4. ALL EXISTING MECHANICAL PIPING AND EQUIPMENT REMOVED SHALL BE SALVAGED PER SPECIFICATIONS.
5. CONTRACTOR IS RESPONSIBLE FOR DISPOSAL OF DEMOLISHED MATERIAL. DISPOSAL SHALL BE IN ACCORDANCE WITH ALL LOCAL, STATE, AND FEDERAL REGULATIONS.
6. PRESSURE WASHING AND CLEANING OF EXISTING WET WELL SHALL BE COMPLETED FOLLOWING EQUIPMENT REMOVAL AND BYPASSING OF THE LIFT STATION.
7. BYPASSING WILL BE REQUIRED FOR CONSTRUCTION. CONTRACTOR TO SUBMIT BY PASSING PLAN PRIOR TO BEGINNING CONSTRUCTION.
8. CONTRACTOR TO CLEAR AND GRUB AS NECESSARY FOR PROPOSED IMPROVEMENTS INCLUDING ELEVATED PLATFORM, SITE FENCING, AND PIPING/CONDUIT INSTALLATION
9. CONTRACTOR TO VERIFY SIZES PRIOR TO ORDERING MATERIALS

LEGEND

R/W	
PROPOSED 6' VINYL FENCING	
PROPOSED 2" RECLAIMED MAIN (OPEN CUT)	PRW-02
PROPOSED AIR RELEASE VALVE ASSEMBLY (ARV)	A
PROPOSED CONCRETE	
TO BE DEMOLISHED	

GROUNDWATER / DEWATERING NOTE:
THE PRESENCE OF GROUNDWATER SHOULD BE ANTICIPATED ON THIS PROJECT. CONTRACTOR'S BID SHALL INCLUDE CONSIDERATION FOR THIS ISSUE. WHEN PERFORMING GRADING OPERATIONS DURING PERIODS OF WET WEATHER, PROVIDE ADEQUATE DEWATERING, DRAINAGE AND GROUND WATER MANAGEMENT TO CONTROL MOISTURE OF SOILS.

811 Know what's below. Call before you dig. Visit Sunshine811.com

No.	Revisions	Date	By

Kimley»Horn

© 2025 KIMLEY-HORN AND ASSOCIATES, INC.
200 CENTRAL AVENUE, SUITE 600
ST. PETERSBURG, FL 33701
P: 727 547 3999
WWW.KIMLEY-HORN.COM REGISTRY NO. 35106

DESIGN ENGINEER:
KYLE T. MATHENY, P.E.
FL LICENSE NUMBER
97287
DATE:

SCALE: AS NOTED
DESIGN: KTM
DRAWN: JTS
CHECKED: SNH

LIFT STATION 9 REHABILITATION SITE PLAN

CITY OF ST. PETE BEACH
PUMP & LIFT STATION
REHABILITATIONS
PID# PS26-401-608-00
PINELLAS COUNY FLORIDA

DATE:
NOVEMBER 2025

PROJECT NO.
148404108

SHEET NUMBER
C-03

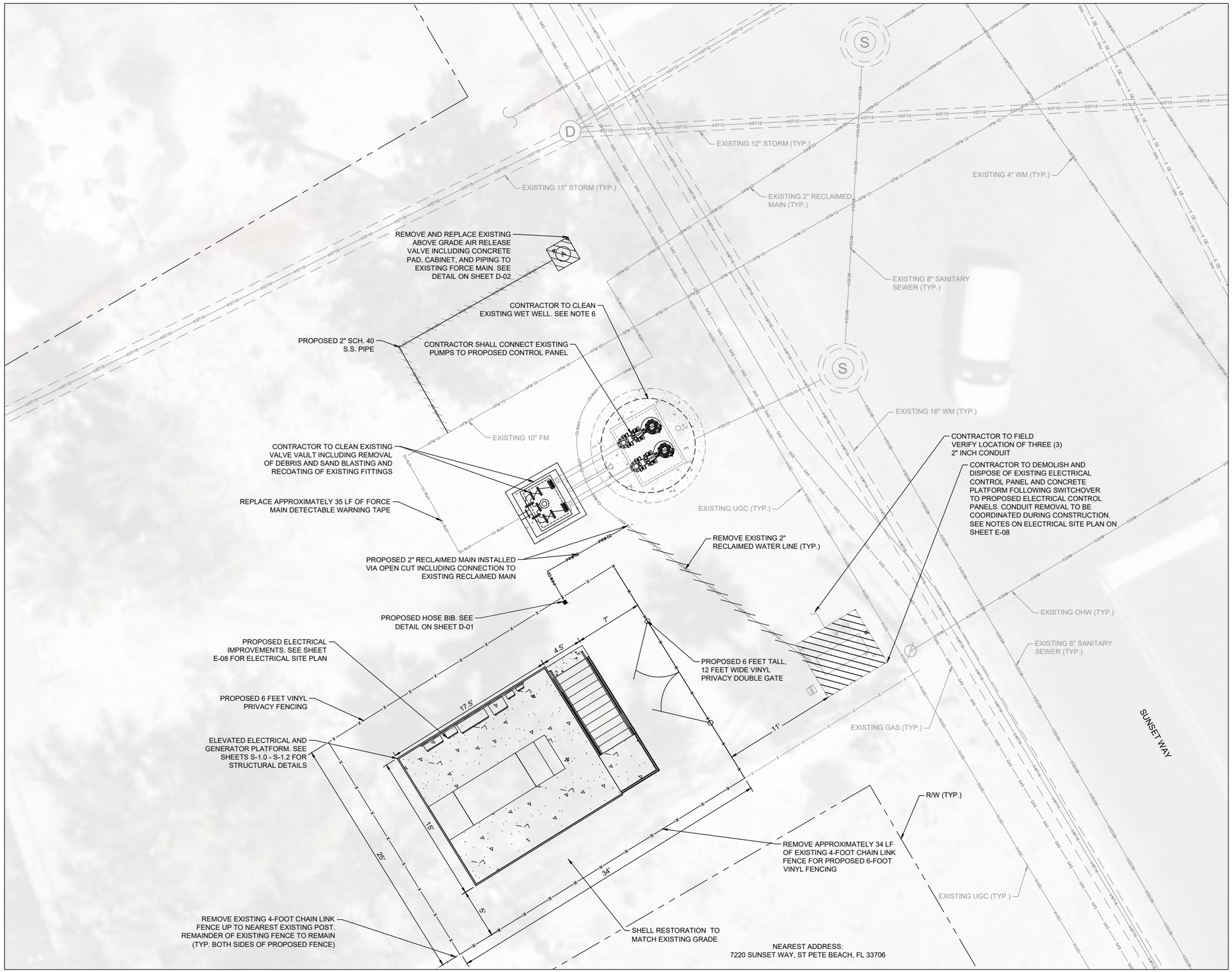

NORTH

GRAPHIC SCALE IN FEET
0 2.5 5 10

GENERAL NOTES:

1. CONTRACTOR SHALL FIELD VERIFY EXISTING CONDITIONS PRIOR TO BEGINNING CONSTRUCTION AND ORDERING EQUIPMENT. CONTRACTOR SHALL NOTIFY ENGINEER OF DISCREPANCIES
2. CONTRACTOR SHALL TAKE ALL PRECAUTIONARY MEASURES NECESSARY TO PROTECT EXISTING EQUIPMENT, UTILITIES, STRUCTURES, AND PERSONNEL FROM DAMAGE OR INJURY DURING CONSTRUCTION.
3. CONSTRUCTION SEQUENCE SHALL BE COORDINATED TO AVOID ANY FLOW INTERRUPTIONS.
4. ALL EXISTING MECHANICAL PIPING AND EQUIPMENT REMOVED SHALL BE SALVAGED PER SPECIFICATIONS.
5. CONTRACTOR IS RESPONSIBLE FOR DISPOSAL OF DEMOLISHED MATERIAL. DISPOSAL SHALL BE IN ACCORDANCE WITH ALL LOCAL, STATE, AND FEDERAL REGULATIONS.
6. PRESSURE WASHING AND CLEANING OF EXISTING WET WELL SHALL BE COMPLETED FOLLOWING EQUIPMENT REMOVAL AND BYPASSING OF THE LIFT STATION.
7. BYPASSING WILL BE REQUIRED FOR CONSTRUCTION. CONTRACTOR TO SUBMIT BY PASSING PLAN PRIOR TO BEGINNING CONSTRUCTION.
8. CONTRACTOR TO CLEAR AND GRUB AS NECESSARY FOR PROPOSED IMPROVEMENTS INCLUDING ELEVATED PLATFORM, SITE FENCING, AND PIPING/CONDUIT INSTALLATION
9. CONTRACTOR TO VERIFY SIZES PRIOR TO ORDERING MATERIALS

LEGEND
R/W
PROPOSED 6' VINYL FENCING
PROPOSED 2" RECLAIMED MAIN (OPEN CUT)
PROPOSED AIR RELEASE VALVE ASSEMBLY (ARV)
PROPOSED CONCRETE
TO BE DEMOLISHED

GROUNDWATER / DEWATERING NOTE:
THE PRESENCE OF GROUNDWATER SHOULD BE ANTICIPATED ON THIS PROJECT. CONTRACTOR'S BID SHALL INCLUDE CONSIDERATION FOR THIS ISSUE. WHEN PERFORMING GRADING OPERATIONS DURING PERIODS OF WET WEATHER, PROVIDE ADEQUATE DEWATERING, DRAINAGE AND GROUND WATER MANAGEMENT TO CONTROL MOISTURE OF SOILS.

811 Know what's below. Call before you dig. Visit Sunshine.com www.callsunshine.com

No.	Revisions	Date	By

Kimley»Horn

© 2025 KIMLEY-HORN AND ASSOCIATES, INC.
200 CENTRAL AVENUE, SUITE 600
ST. PETERSBURG, FL 33701
P: 727 547 3999
WWW.KIMLEY-HORN.COM REGISTRY NO. 35106

DESIGN ENGINEER: KYLE T. MATHENY, P.E.
FL LICENSE NUMBER 97287
DATE:

SCALE: AS NOTED
DESIGN: KTM
DRAWN: JTS
CHECKED: SNH

LIFT STATION 10
REHABILITATION SITE PLAN

CITY OF ST. PETE BEACH
PUMP & LIFT STATION REHABILITATIONS
PID# PS26-401-608-00
PINELLAS COUNTY FLORIDA

DATE:
NOVEMBER 2025

PROJECT NO.
148404108

SHEET NUMBER
C-04



NORTH

GRAPHIC SCALE IN FEET
0 2.5 5 10

GENERAL NOTES:

1. CONTRACTOR SHALL FIELD VERIFY EXISTING CONDITIONS PRIOR TO BEGINNING CONSTRUCTION AND ORDERING EQUIPMENT. CONTRACTOR SHALL NOTIFY ENGINEER OF DISCREPANCIES
2. CONTRACTOR SHALL TAKE ALL PRECAUTIONARY MEASURES NECESSARY TO PROTECT EXISTING EQUIPMENT, UTILITIES, STRUCTURES, AND PERSONNEL FROM DAMAGE OR INJURY DURING CONSTRUCTION.
3. CONSTRUCTION SEQUENCE SHALL BE COORDINATED TO AVOID ANY FLOW INTERRUPTIONS.
4. ALL EXISTING MECHANICAL PIPING AND EQUIPMENT REMOVED SHALL BE SALVAGED PER SPECIFICATIONS.
5. CONTRACTOR IS RESPONSIBLE FOR DISPOSAL OF DEMOLISHED MATERIAL. DISPOSAL SHALL BE IN ACCORDANCE WITH ALL LOCAL, STATE, AND FEDERAL REGULATIONS.
6. PRESSURE WASHING AND CLEANING OF EXISTING WET WELL SHALL BE COMPLETED FOLLOWING EQUIPMENT REMOVAL AND BYPASSING OF THE LIFT STATION.
7. BYPASSING WILL BE REQUIRED FOR CONSTRUCTION. CONTRACTOR TO SUBMIT BY PASSING PLAN PRIOR TO BEGINNING CONSTRUCTION.
8. CONTRACTOR TO CLEAR AND GRUB AS NECESSARY FOR PROPOSED IMPROVEMENTS INCLUDING ELEVATED PLATFORM, SITE FENCING, AND PIPING/CONDUIT INSTALLATION
9. CONTRACTOR TO VERIFY SIZES PRIOR TO ORDERING MATERIALS

LEGEND

R/W

PROPOSED 6' VINYL FENCING

PROPOSED 2" RECLAIMED MAIN (OPEN CUT)

PROPOSED AIR RELEASE VALVE ASSEMBLY (ARV)

PROPOSED CONCRETE

TO BE DEMOLISHED

GROUNDWATER / DEWATERING NOTE:
THE PRESENCE OF GROUNDWATER SHOULD BE ANTICIPATED ON THIS PROJECT. CONTRACTOR'S BID SHALL INCLUDE CONSIDERATION FOR THIS ISSUE. WHEN PERFORMING GRADING OPERATIONS DURING PERIODS OF WET WEATHER, PROVIDE ADEQUATE DEWATERING, DRAINAGE AND GROUND WATER MANAGEMENT TO CONTROL MOISTURE OF SOILS.

811 Know what's below. Call before you dig. Visit Sunshine811.com

No.	Revisions	Date	By

Kimley»Horn

© 2025 KIMLEY-HORN AND ASSOCIATES, INC.
200 CENTRAL AVENUE, SUITE 600
ST. PETERSBURG, FL 33701
P: 727 547 3999
WWW.KIMLEY-HORN.COM REGISTRY NO. 35106

DESIGN ENGINEER: KYLE T. MATHENY, P.E.
FL LICENSE NUMBER 97287
DATE:

SCALE: AS NOTED
DESIGN: KTM
DRAWN: JTS
CHECKED: SNH

LIFT STATION 11
REHABILITATION SITE PLAN

CITY OF ST. PETE BEACH
PUMP & LIFT STATION
REHABILITATIONS
PID# PS26-401-608-00
PINELLAS COUNY FLORIDA

DATE:
NOVEMBER 2025

PROJECT NO.
148404108

SHEET NUMBER
C-05



NORTH

GRAPHIC SCALE IN FEET
0 2.5 5 10

GENERAL NOTES:

1. CONTRACTOR SHALL FIELD VERIFY EXISTING CONDITIONS PRIOR TO BEGINNING CONSTRUCTION AND ORDERING EQUIPMENT. CONTRACTOR SHALL NOTIFY ENGINEER OF DISCREPANCIES
2. CONTRACTOR SHALL TAKE ALL PRECAUTIONARY MEASURES NECESSARY TO PROTECT EXISTING EQUIPMENT, UTILITIES, STRUCTURES, AND PERSONNEL FROM DAMAGE OR INJURY DURING CONSTRUCTION.
3. CONSTRUCTION SEQUENCE SHALL BE COORDINATED TO AVOID ANY FLOW INTERRUPTIONS.
4. ALL EXISTING MECHANICAL PIPING AND EQUIPMENT REMOVED SHALL BE SALVAGED PER SPECIFICATIONS.
5. CONTRACTOR IS RESPONSIBLE FOR DISPOSAL OF DEMOLISHED MATERIAL. DISPOSAL SHALL BE IN ACCORDANCE WITH ALL LOCAL, STATE, AND FEDERAL REGULATIONS.
6. PRESSURE WASHING AND CLEANING OF EXISTING WET WELL SHALL BE COMPLETED FOLLOWING EQUIPMENT REMOVAL AND BYPASSING OF THE LIFT STATION.
7. BYPASSING WILL BE REQUIRED FOR CONSTRUCTION. CONTRACTOR TO SUBMIT BY PASSING PLAN PRIOR TO BEGINNING CONSTRUCTION.
8. CONTRACTOR TO CLEAR AND GRUB AS NECESSARY FOR PROPOSED IMPROVEMENTS INCLUDING ELEVATED PLATFORM, SITE FENCING, AND PIPING/CONDUIT INSTALLATION
9. CONTRACTOR TO VERIFY SIZES PRIOR TO ORDERING MATERIALS

LEGEND

R/W

PROPOSED 6' VINYL FENCING

PROPOSED 2" RECLAIMED MAIN (OPEN CUT)

PROPOSED AIR RELEASE VALVE ASSEMBLY (ARV)

PROPOSED CONCRETE

TO BE DEMOLISHED

GROUNDWATER / DEWATERING NOTE:
THE PRESENCE OF GROUNDWATER SHOULD BE ANTICIPATED ON THIS PROJECT. CONTRACTOR'S BID SHALL INCLUDE CONSIDERATION FOR THIS ISSUE. WHEN PERFORMING GRADING OPERATIONS DURING PERIODS OF WET WEATHER, PROVIDE ADEQUATE DEWATERING, DRAINAGE AND GROUND WATER MANAGEMENT TO CONTROL MOISTURE OF SOILS.

811 Know what's below. Call before you dig. Dial 811 or visit www.callsunshine.com

No.	Revisions	Date	By

Kimley»Horn

© 2025 KIMLEY-HORN AND ASSOCIATES, INC.
200 CENTRAL AVENUE, SUITE 600
ST. PETERSBURG, FL 33701
P: 727 547 3999
WWW.KIMLEY-HORN.COM REGISTRY NO. 35106

DESIGN ENGINEER: KYLE T. MATHENY, P.E.
FL LICENSE NUMBER 97287
DATE:

SCALE: AS NOTED
DESIGN: KTM
DRAWN: JTS
CHECKED: SNH

LIFT STATION 12
REHABILITATION SITE PLAN

CITY OF ST. PETE BEACH
PUMP & LIFT STATION
REHABILITATIONS
PID# PS26-401-608-00

PINELLAS COUNTY FLORIDA

DATE:
NOVEMBER 2025

PROJECT NO.
148404108

SHEET NUMBER
C-06

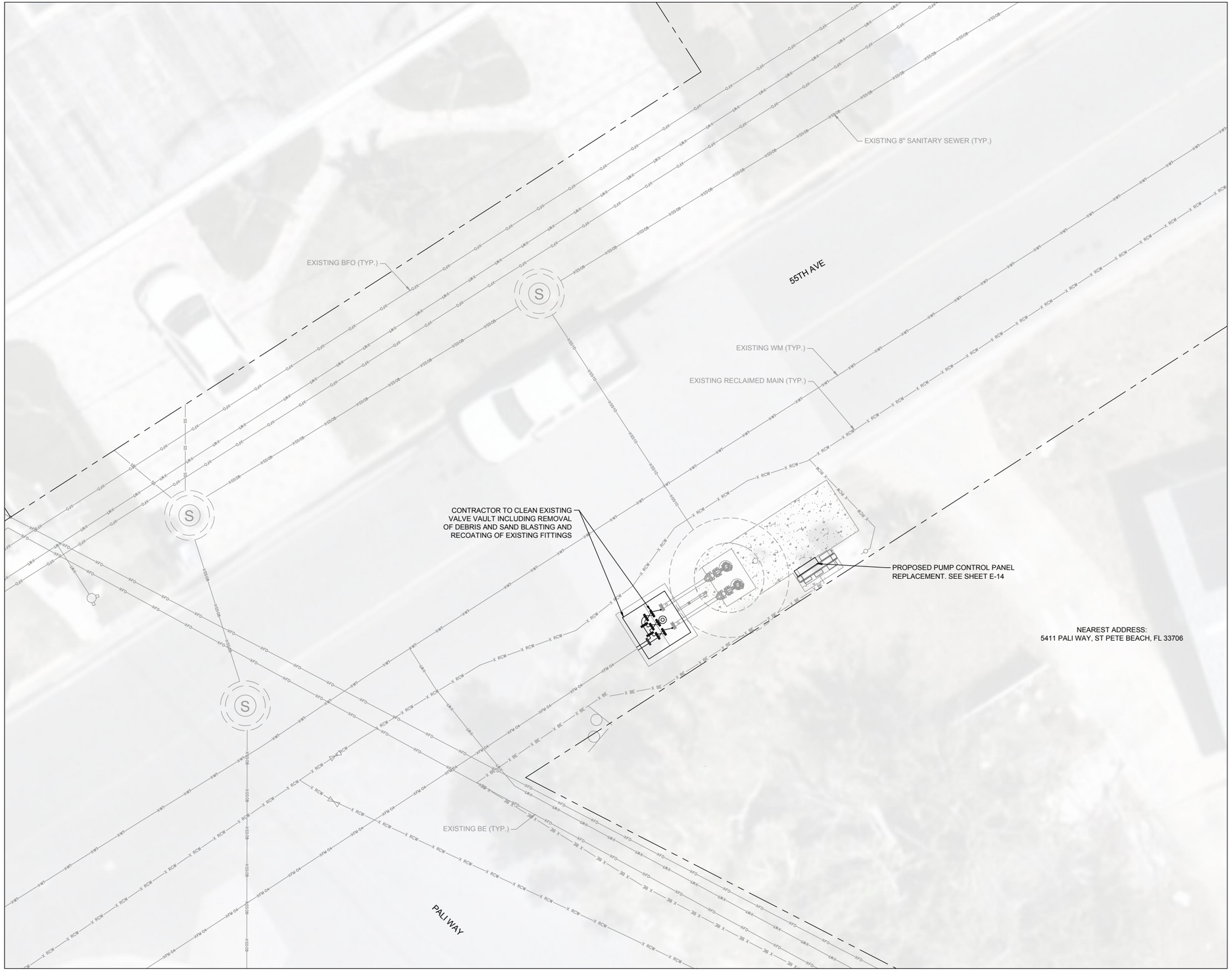

NORTH

GRAPHIC SCALE IN FEET
0 2.5 5 10

GENERAL NOTES:

1. CONTRACTOR SHALL FIELD VERIFY EXISTING CONDITIONS PRIOR TO BEGINNING CONSTRUCTION AND ORDERING EQUIPMENT. CONTRACTOR SHALL NOTIFY ENGINEER OF DISCREPANCIES
2. CONTRACTOR SHALL TAKE ALL PRECAUTIONARY MEASURES NECESSARY TO PROTECT EXISTING EQUIPMENT, UTILITIES, STRUCTURES, AND PERSONNEL FROM DAMAGE OR INJURY DURING CONSTRUCTION.
3. CONSTRUCTION SEQUENCE SHALL BE COORDINATED TO AVOID ANY FLOW INTERRUPTIONS.
4. ALL EXISTING MECHANICAL PIPING AND EQUIPMENT REMOVED SHALL BE SALVAGED PER SPECIFICATIONS.
5. CONTRACTOR IS RESPONSIBLE FOR DISPOSAL OF DEMOLISHED MATERIAL. DISPOSAL SHALL BE IN ACCORDANCE WITH ALL LOCAL, STATE, AND FEDERAL REGULATIONS.
6. PRESSURE WASHING AND CLEANING OF EXISTING WET WELL SHALL BE COMPLETED FOLLOWING EQUIPMENT REMOVAL AND BYPASSING OF THE LIFT STATION.
7. BYPASSING WILL BE REQUIRED FOR CONSTRUCTION. CONTRACTOR TO SUBMIT BY PASSING PLAN PRIOR TO BEGINNING CONSTRUCTION.
8. CONTRACTOR TO CLEAR AND GRUB AS NECESSARY FOR PROPOSED IMPROVEMENTS INCLUDING ELEVATED PLATFORM, SITE FENCING, AND PIPING/CONDUIT INSTALLATION
9. CONTRACTOR TO VERIFY SIZES PRIOR TO ORDERING MATERIALS

LEGEND

R/W

PROPOSED 6' VINYL FENCING

PROPOSED 2" RECLAIMED MAIN (OPEN CUT) — PRW-02

PROPOSED AIR RELEASE VALVE ASSEMBLY (ARV) — A

PROPOSED CONCRETE

TO BE DEMOLISHED

GROUNDWATER / DEWATERING NOTE:
THE PRESENCE OF GROUNDWATER SHOULD BE ANTICIPATED ON THIS PROJECT. CONTRACTOR'S BID SHALL INCLUDE CONSIDERATION FOR THIS ISSUE. WHEN PERFORMING GRADING OPERATIONS DURING PERIODS OF WET WEATHER, PROVIDE ADEQUATE DEWATERING, DRAINAGE AND GROUND WATER MANAGEMENT TO CONTROL MOISTURE OF SOILS.

811 Know what's below. Call before you dig. Visit Sunshine811.com

No.	Revisions	Date	By

Kimley»Horn

© 2025 KIMLEY-HORN AND ASSOCIATES, INC.
200 CENTRAL AVENUE, SUITE 600
ST. PETERSBURG, FL 33701
P: 727 547 3999
WWW.KIMLEY-HORN.COM REGISTRY NO. 35106

DESIGN ENGINEER: KYLE T. MATHENY, P.E.
FL LICENSE NUMBER 97287
DATE:

SCALE: AS NOTED
DESIGN: KTM
DRAWN: JTS
CHECKED: SNH

LIFT STATION 13
REHABILITATION SITE PLAN

CITY OF ST. PETE BEACH
PUMP & LIFT STATION
REHABILITATIONS
PID# PS26-401-608-00
PINELLAS COUNY FLORIDA

DATE:
DECEMBER 2025

PROJECT NO.
148404108

SHEET NUMBER
C-07

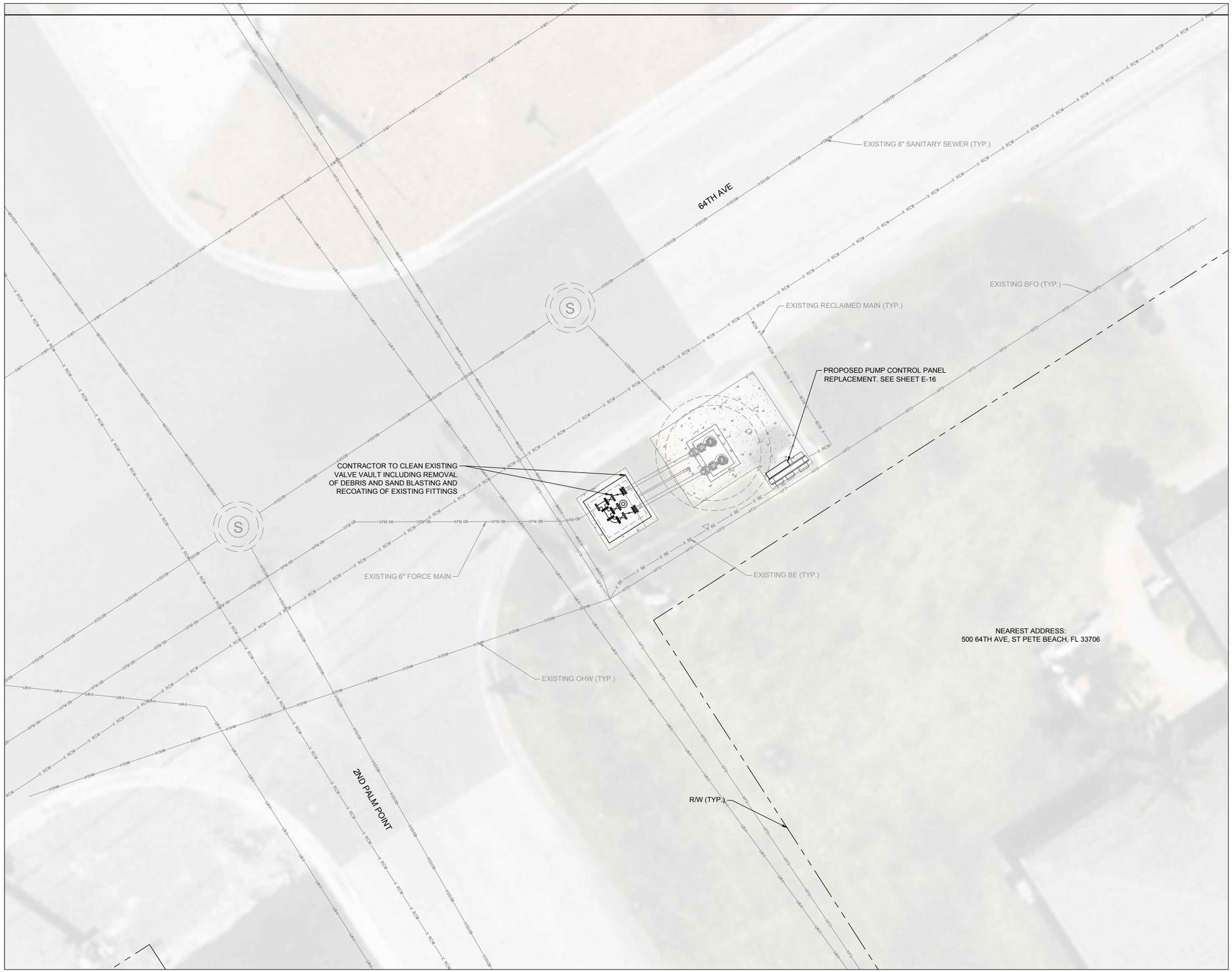

NORTH

GRAPHIC SCALE IN FEET
0 2.5 5 10

GENERAL NOTES:

1. CONTRACTOR SHALL FIELD VERIFY EXISTING CONDITIONS PRIOR TO BEGINNING CONSTRUCTION AND ORDERING EQUIPMENT. CONTRACTOR SHALL NOTIFY ENGINEER OF DISCREPANCIES
2. CONTRACTOR SHALL TAKE ALL PRECAUTIONARY MEASURES NECESSARY TO PROTECT EXISTING EQUIPMENT, UTILITIES, STRUCTURES, AND PERSONNEL FROM DAMAGE OR INJURY DURING CONSTRUCTION.
3. CONSTRUCTION SEQUENCE SHALL BE COORDINATED TO AVOID ANY FLOW INTERRUPTIONS.
4. ALL EXISTING MECHANICAL PIPING AND EQUIPMENT REMOVED SHALL BE SALVAGED PER SPECIFICATIONS.
5. CONTRACTOR IS RESPONSIBLE FOR DISPOSAL OF DEMOLISHED MATERIAL. DISPOSAL SHALL BE IN ACCORDANCE WITH ALL LOCAL, STATE, AND FEDERAL REGULATIONS.
6. PRESSURE WASHING AND CLEANING OF EXISTING WET WELL SHALL BE COMPLETED FOLLOWING EQUIPMENT REMOVAL AND BYPASSING OF THE LIFT STATION.
7. BYPASSING WILL BE REQUIRED FOR CONSTRUCTION. CONTRACTOR TO SUBMIT BY PASSING PLAN PRIOR TO BEGINNING CONSTRUCTION.
8. CONTRACTOR TO CLEAR AND GRUB AS NECESSARY FOR PROPOSED IMPROVEMENTS INCLUDING ELEVATED PLATFORM, SITE FENCING, AND PIPING/CONDUIT INSTALLATION
9. CONTRACTOR TO VERIFY SIZES PRIOR TO ORDERING MATERIALS

LEGEND

R/W

PROPOSED 6' VINYL FENCING

PROPOSED 2" RECLAIMED MAIN (OPEN CUT)

PROPOSED AIR RELEASE VALVE ASSEMBLY (ARV)

PROPOSED CONCRETE

TO BE DEMOLISHED

GROUNDWATER / DEWATERING NOTE:
THE PRESENCE OF GROUNDWATER SHOULD BE ANTICIPATED ON THIS PROJECT. CONTRACTOR'S BID SHALL INCLUDE CONSIDERATION FOR THIS ISSUE. WHEN PERFORMING GRADING OPERATIONS DURING PERIODS OF WET WEATHER, PROVIDE ADEQUATE DEWATERING, DRAINAGE AND GROUND WATER MANAGEMENT TO CONTROL MOISTURE OF SOILS.

811 KNOW WHAT'S BELOW. CALL BEFORE YOU DIG. It's fast. It's free. It's the law. www.callsunshine.com

No.	Revisions	Date	By

Kimley»Horn

© 2025 KIMLEY-HORN AND ASSOCIATES, INC.
200 CENTRAL AVENUE, SUITE 600
ST. PETERSBURG, FL 33701
P: 727 547 3999
WWW.KIMLEY-HORN.COM REGISTRY NO. 35106

DESIGN ENGINEER: KYLE T. MATHENY, P.E.
FL LICENSE NUMBER 97287
DATE:

SCALE: AS NOTED
DESIGN: KTM
DRAWN: JTS
CHECKED: SNH

LIFT STATION 14
REHABILITATION SITE PLAN

CITY OF ST. PETE BEACH
PUMP & LIFT STATION
REHABILITATIONS
PID# PS26-401-608-00

PINELLAS COUNY FLORIDA

DATE:
DECEMBER 2025

PROJECT NO.
148404108

SHEET NUMBER
C-08

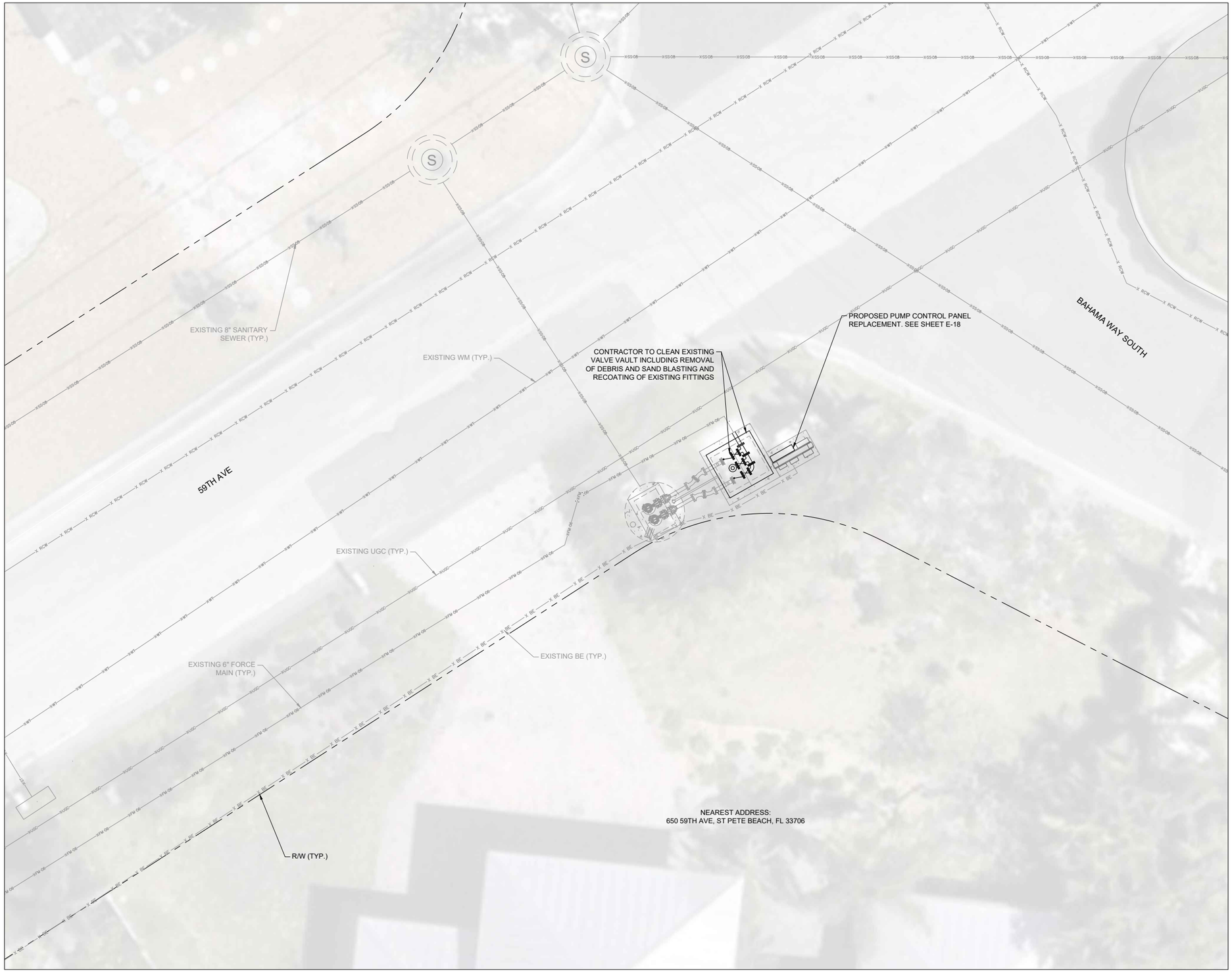

NORTH

GRAPHIC SCALE IN FEET
0 2.5 5 10

GENERAL NOTES:

1. CONTRACTOR SHALL FIELD VERIFY EXISTING CONDITIONS PRIOR TO BEGINNING CONSTRUCTION AND ORDERING EQUIPMENT. CONTRACTOR SHALL NOTIFY ENGINEER OF DISCREPANCIES
2. CONTRACTOR SHALL TAKE ALL PRECAUTIONARY MEASURES NECESSARY TO PROTECT EXISTING EQUIPMENT, UTILITIES, STRUCTURES, AND PERSONNEL FROM DAMAGE OR INJURY DURING CONSTRUCTION.
3. CONSTRUCTION SEQUENCE SHALL BE COORDINATED TO AVOID ANY FLOW INTERRUPTIONS.
4. ALL EXISTING MECHANICAL PIPING AND EQUIPMENT REMOVED SHALL BE SALVAGED PER SPECIFICATIONS.
5. CONTRACTOR IS RESPONSIBLE FOR DISPOSAL OF DEMOLISHED MATERIAL. DISPOSAL SHALL BE IN ACCORDANCE WITH ALL LOCAL, STATE, AND FEDERAL REGULATIONS.
6. PRESSURE WASHING AND CLEANING OF EXISTING WET WELL SHALL BE COMPLETED FOLLOWING EQUIPMENT REMOVAL AND BYPASSING OF THE LIFT STATION.
7. BYPASSING WILL BE REQUIRED FOR CONSTRUCTION. CONTRACTOR TO SUBMIT BY PASSING PLAN PRIOR TO BEGINNING CONSTRUCTION.
8. CONTRACTOR TO CLEAR AND GRUB AS NECESSARY FOR PROPOSED IMPROVEMENTS INCLUDING ELEVATED PLATFORM, SITE FENCING, AND PIPING/CONDUIT INSTALLATION
9. CONTRACTOR TO VERIFY SIZES PRIOR TO ORDERING MATERIALS

LEGEND

R/W

PROPOSED 6' VINYL FENCING

PROPOSED 2" RECLAIMED MAIN (OPEN CUT)

PROPOSED AIR RELEASE VALVE ASSEMBLY (ARV)

PROPOSED CONCRETE

TO BE DEMOLISHED

GROUNDWATER / DEWATERING NOTE:
THE PRESENCE OF GROUNDWATER SHOULD BE ANTICIPATED ON THIS PROJECT. CONTRACTOR'S BID SHALL INCLUDE CONSIDERATION FOR THIS ISSUE. WHEN PERFORMING GRADING OPERATIONS DURING PERIODS OF WET WEATHER, PROVIDE ADEQUATE DEWATERING, DRAINAGE AND GROUND WATER MANAGEMENT TO CONTROL MOISTURE OF SOILS.

811 KNOW WHAT'S BELOW ALWAYS CALL 811 BEFORE YOU DIG
www.callsunshine.com

No.	Revisions	Date	By

Kimley»Horn

© 2025 KIMLEY-HORN AND ASSOCIATES, INC.
200 CENTRAL AVENUE, SUITE 600
ST. PETERSBURG, FL 33701
P: 727 547 3999
WWW.KIMLEY-HORN.COM REGISTRY NO. 35106

DESIGN ENGINEER:
KYLE T. MATHENY, P.E.
FL LICENSE NUMBER 97287
DATE:

SCALE: AS NOTED
DESIGN: KTM
DRAWN: JTS
CHECKED: SNH

LIFT STATION 15
REHABILITATION SITE PLAN

CITY OF ST. PETE BEACH
PUMP & LIFT STATION
REHABILITATIONS
PID# PS26-401-608-00
PINELLAS COUNY FLORIDA

DATE:
NOVEMBER 2025

PROJECT NO.
148404108

SHEET NUMBER
C-09

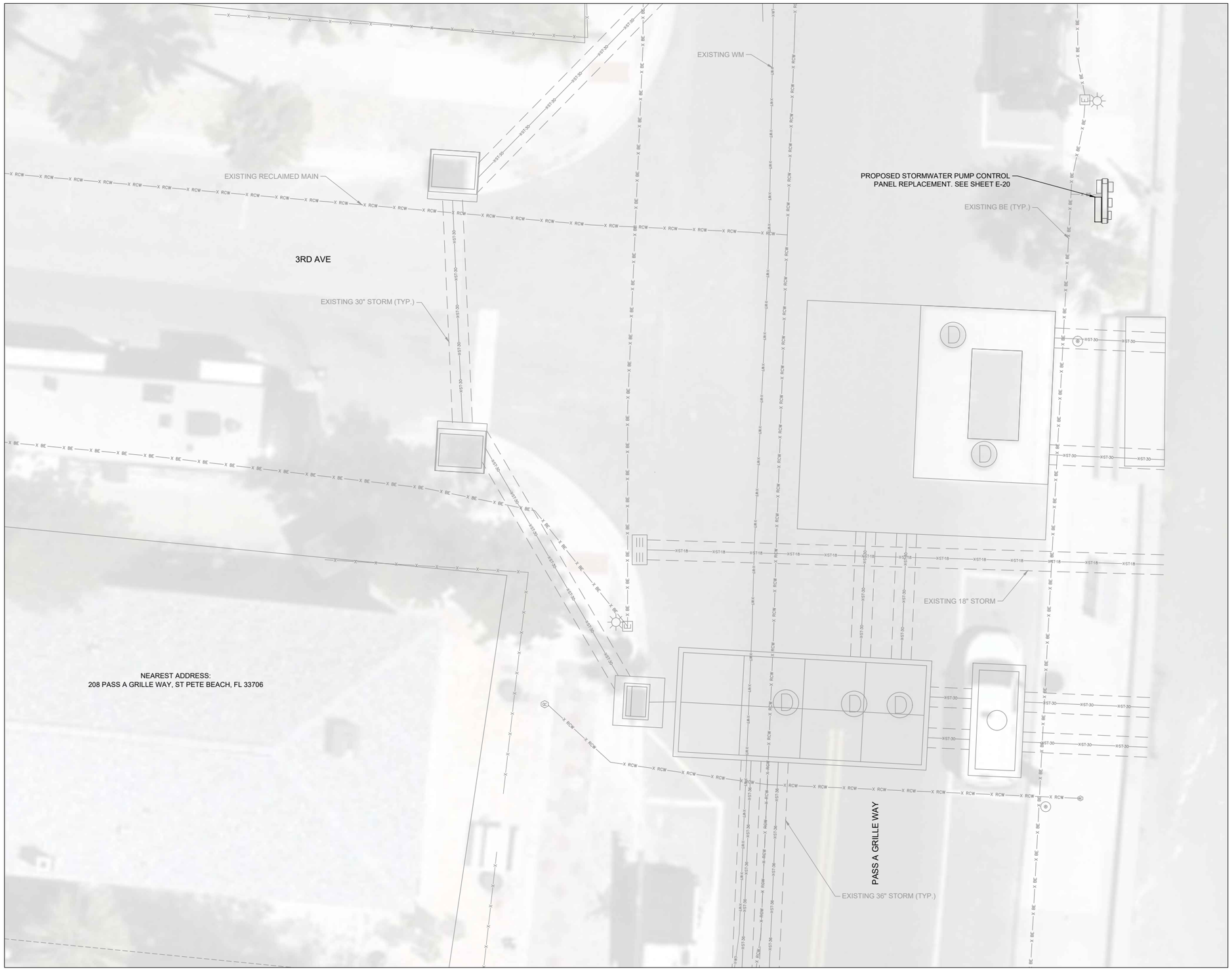

NORTH

GRAPHIC SCALE IN FEET
0 2.5 5 10

GENERAL NOTES:

1. CONTRACTOR SHALL FIELD VERIFY EXISTING CONDITIONS PRIOR TO BEGINNING CONSTRUCTION AND ORDERING EQUIPMENT. CONTRACTOR SHALL NOTIFY ENGINEER OF DISCREPANCIES
2. CONTRACTOR SHALL TAKE ALL PRECAUTIONARY MEASURES NECESSARY TO PROTECT EXISTING EQUIPMENT, UTILITIES, STRUCTURES, AND PERSONNEL FROM DAMAGE OR INJURY DURING CONSTRUCTION.
3. CONSTRUCTION SEQUENCE SHALL BE COORDINATED TO AVOID ANY FLOW INTERRUPTIONS.
4. ALL EXISTING MECHANICAL PIPING AND EQUIPMENT REMOVED SHALL BE SALVAGED PER SPECIFICATIONS.
5. CONTRACTOR IS RESPONSIBLE FOR DISPOSAL OF DEMOLISHED MATERIAL. DISPOSAL SHALL BE IN ACCORDANCE WITH ALL LOCAL, STATE, AND FEDERAL REGULATIONS.
6. PRESSURE WASHING AND CLEANING OF EXISTING WET WELL SHALL BE COMPLETED FOLLOWING EQUIPMENT REMOVAL AND BYPASSING OF THE LIFT STATION.
7. BYPASSING WILL BE REQUIRED FOR CONSTRUCTION. CONTRACTOR TO SUBMIT BY PASSING PLAN PRIOR TO BEGINNING CONSTRUCTION.
8. CONTRACTOR TO CLEAR AND GRUB AS NECESSARY FOR PROPOSED IMPROVEMENTS INCLUDING ELEVATED PLATFORM, SITE FENCING, AND PIPING/CONDUIT INSTALLATION
9. CONTRACTOR TO VERIFY SIZES PRIOR TO ORDERING MATERIALS

LEGEND

R/W

PROPOSED 6' VINYL FENCING

PROPOSED 2" RECLAIMED MAIN (OPEN CUT)

PROPOSED AIR RELEASE VALVE ASSEMBLY (ARV)

PROPOSED CONCRETE

TO BE DEMOLISHED

GROUNDWATER / DEWATERING NOTE:
THE PRESENCE OF GROUNDWATER SHOULD BE ANTICIPATED ON THIS PROJECT. CONTRACTOR'S BID SHALL INCLUDE CONSIDERATION FOR THIS ISSUE. WHEN PERFORMING GRADING OPERATIONS DURING PERIODS OF WET WEATHER, PROVIDE ADEQUATE DEWATERING, DRAINAGE AND GROUND WATER MANAGEMENT TO CONTROL MOISTURE OF SOILS.

811 KNOW WHAT'S BELOW. CALL BEFORE YOU DIG. It's fast. It's free. It's the law. www.callsunshine.com

No.	Revisions	Date	By

Kimley»Horn

© 2025 KIMLEY-HORN AND ASSOCIATES, INC.
200 CENTRAL AVENUE, SUITE 600
ST. PETERSBURG, FL 33701
P: 727 547 3999
WWW.KIMLEY-HORN.COM REGISTRY NO. 35106

DESIGN ENGINEER: KYLE T. MATHENY, P.E.
FL LICENSE NUMBER 97287
DATE:

SCALE: AS NOTED
DESIGN: KTM
DRAWN: JTS
CHECKED: SNH

STORMWATER LIFT STATION 35
REHABILITATION SITE PLAN

CITY OF ST. PETE BEACH
PUMP & LIFT STATION
REHABILITATIONS
PID# PS26-401-608-00
PINELLAS COUNY FLORIDA

DATE:
NOVEMBER 2025

PROJECT NO.
148404108

SHEET NUMBER
C-10

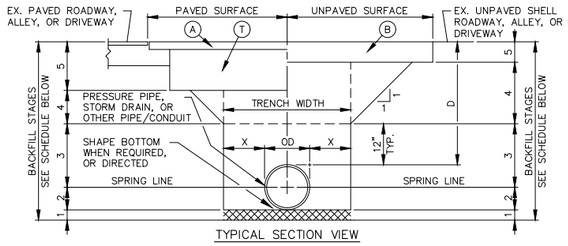

TYPICAL SECTION VIEW

SCHEDULE

STAGE NO.	MATERIALS
1	BEDDING: WHERE DIRECTED, REPLACE EXISTING MATERIAL WITH 4" TO 6" OF GRANULAR MATERIAL. THE GRANULAR MATERIAL MAY BE ANY OF THE FOLLOWING: CLEAN NATIVE SAND, CONCRETE SAND, GRAVEL, OR RECLAIMED CONCRETE. SEE NOTE 1, BELOW. BOX CULVERTS SHALL HAVE MANDATORY STONE BEDDING PER SPECIFICATIONS.
2	PIPE BEDDING/HAUNCHING: NATIVE SAND IN 6" LIFTS, WHERE DIRECTED, REPLACE EXISTING MATERIAL WITH CLEAN CONSTRUCTION SAND, OR GRAVEL. SEE NOTE 2, BELOW
3	INITIAL BACKFILL: NATIVE SAND IN 6" LIFTS. WHERE DIRECTED, REPLACE EXISTING MATERIAL WITH CLEAN CONSTRUCTION SAND, SEE NOTE 2, BELOW
4	TRENCH BACKFILL: NATIVE SAND IN LIFTS AS LISTED BELOW– WHERE DIRECTED, REPLACE EXISTING MATERIAL WITH CLEAN CONSTRUCTION SAND. PAVED ROADWAYS, PAVED DRIVEWAYS, AND PAVED ALLEYS IN 6" LIFTS UNPAVED ROADWAYS, UNPAVED DRIVEWAYS, UNPAVED ALLEYS, AND SIDEWALKS IN 6" LIFTS SOD, OR MULCHED SURFACES IN 12" LIFTS
5	SURFACE RESTORATION: AS SHOWN BELOW. ALSO SEE NOTES BELOW FOR OTHER STANDARD DETAIL REFERENCES.

PRESSURE PIPE	X	STORM DRAIN–RCP, ERCP, B/C	X	OTHER PIPE/CONDUIT	X
4"	12"	UPTO 18"	12"	UPTO 5"	(2) OR (3)
6"	12"	21" TO 36"	18"	6" TO 18"	12"
8"	12"	42" TO 72"	24"	21" TO 36"	18"
12"	12"	BEYOND 72"	(2) OR (3)	42" TO 72"	24"
16"	12"	--------	------	------	------

	ITEM	ALLEY OR D/W	STD DUTY RDWY	HVY DUTY RDWY	BRICK RDWY	REMARKS
A	SURFACE PAVING MIN. THICKNESS	1" ASPHALT	2.25" ASPHALT	2.25" ASPHALT	ROADWAY BRICK	
B	SURFACE COVER MIN. THICKNESS	6" SHELL	6" SHELL	N/A	N/A	SOD
T	BASE MATERIAL MIN. THICKNESS	LMRK/SHELL–9" RCLM. CONC. 10.5"	LMRK/SHELL–12" RCLM. CONC. 14"	LMRK/SHELL–16" RCLM. CONC. 19"	1" SAND OVER 12" SHELL BASE	BASE MAT. MAY BE ASPH. EXCEPT W/ BRICK RDWY
D	COVER MIN. DEPTH	PRESS. PIPE–36" ALL OTHER PIPE–30"	PRESS. PIPE–36" ALL OTHER PIPE–30"	PRESS. PIPE–36" ALL OTHER PIPE–36"	PRESS. PIPE–36" ALL OTHER PIPE–30"	

NOTES:
1. ALL BEDDING TYPES REQUIRE AN IMPERMEABLE GROUNDWATER BARRIER AT 100' INTERVALS ALONG THE TRENCH LENGTH.
2. GRAVEL OR RECLAIMED CONCRETE SHOULD NOT CONTACT DUCTILE IRON OR POLYVINYL PIPE OR CONDUIT.
3. FOR PAVED SURFACES SEE STANDARD DETAIL–FLEXIBLE PAVEMENT RESTORATION.
4. FOR UNPAVED SURFACES SEE STANDARD DETAIL–RIGHT–OF–WAY RESTORATION.

PIPE BEDDING DETAIL
N.T.S. 1 D-01

NOTES:
1. ALL MATERIALS SHALL BE IN ACCORDANCE WITH THE LATEST P.C.U. APPROVED MATERIAL SPECIFICATION MANUAL.
2. CORPORATION STOPS SHALL BE COMPATIBLE WITH DR 9 (C.T.S.) H.D.P.E. TUBING.
3. SERVICE SADDLE REQUIRED FOR ALL TAPS EXCEPT FOR D.I.P. 1" TAPS AND SMALLER.
4. METER ONLY TO BE FURNISHED BY P.C.U.
5. METER BOXES SHALL BE RESIDENTIAL SIZE.
6. ALL METER BOXES LOCATED WITHIN VEHICULAR TRAVEL AREAS SHALL BE H–20 LOADING. ALL OTHERS SHALL BE H–10 LOADING.
7. TRACER WIRE REQUIRED ON ALL SERVICES.
8. SERVICES OVER 60' IN LENGTH SHALL BE UP–SIZED TO 1".
9. TAP AND METER SHALL BE INSTALLED BY P.C.U. ON ALL PRIVATELY DEVELOPED PROJECTS.
10. METERS WITH DUAL CHECKS SHALL UTILIZE A METER BOX WITH OFFSET MOUSE HOLES.

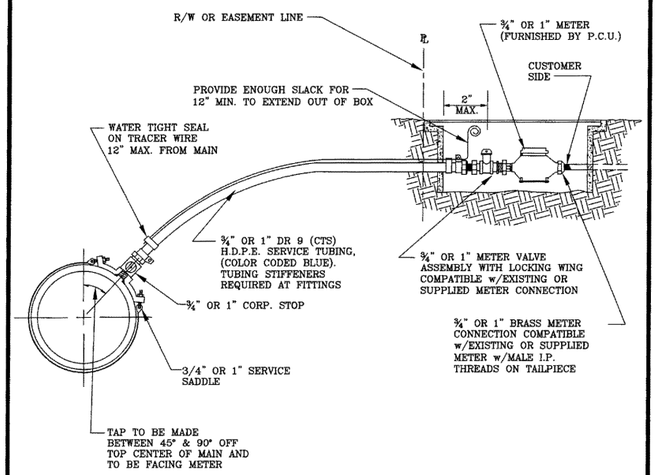

PINELLAS COUNTY	DETAIL INDEX I.D.: PCU WD 3
¾" OR 1" POTABLE WATER SERVICE CONNECTION DETAIL	DATE: FEB/2016
	KEVIN BECOTTE, P.E.
	REVISION:

WATER SERVICE DETAIL
N.T.S. 2 D-01

NOTES:
1. ALL MATERIALS SHALL BE IN ACCORDANCE WITH THE LATEST P.C.U. APPROVED MATERIAL SPECIFICATION MANUAL.
2. CORPORATION STOPS SHALL BE COMPATIBLE WITH DR 9 (C.T.S.) H.D.P.E. TUBING.
3. SERVICE SADDLE REQUIRED FOR ALL TAPS EXCEPT FOR 1" TAPS AND SMALLER ON D.I.P.
4. METER ONLY, TO BE FURNISHED BY P.C.U. (IF REQUIRED).
5. RESIDENTIAL SIZE RECLAIM METER BOX SHALL BE USED FOR UNMETERED SERVICES AND COMMERCIAL SIZE FOR METERED.
6. ALL METER BOXES LOCATED WITHIN VEHICULAR AREAS SHALL BE H–20 LOADING. ALL OTHERS SHALL BE H–10 LOADING.
7. TRACER WIRE REQUIRED ON ALL SERVICES.
8. TAP AND METER SHALL BE INSTALLED BY P.C.U. ON ALL PRIVATELY DEVELOPED PROJECTS.
9. SERVICES OVER 60' IN LENGTH SHALL BE UP–SIZED TO 1½".

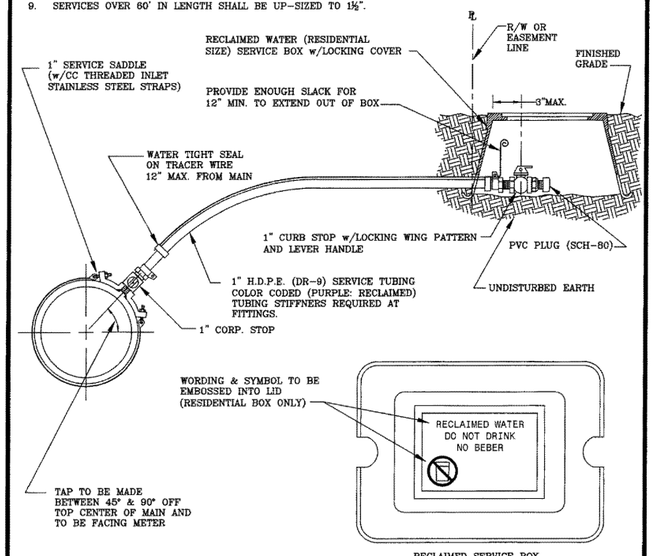

PINELLAS COUNTY	DETAIL INDEX I.D.: PCU RD 1
1" RECLAIMED SERVICE CONNECTION (NON–METERED) DETAIL	DATE: FEB/2016
	KEVIN BECOTTE, P.E.
	REVISION:

RECLAIMED SERVICE DETAIL
N.T.S. 3 D-01

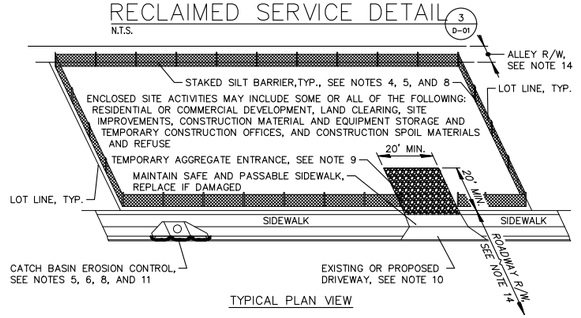

TYPICAL PLAN VIEW

NOTES:
1. NON–CONFORMANCE WITH THE ITEMS LISTED OR SHOWN ON THIS DETAIL MAY RESULT IN A "STOP WORK"
2. THE PURPOSE OF THIS DETAIL IS TO ASSIST THE DEVELOPER, BUILDER, AND/OR CONTRACTOR TO MEET THE MINIMUM REQUIREMENTS OF THE NATIONAL POLLUTANT DISCHARGE ELIMINATION SYSTEM (NPDES) PERMIT ISSUED TO THE CITY OF ST. PETERSBURG.
3. THIS DETAIL IS APPLICABLE FOR ALL CONSTRUCTION SITES AS DESCRIBED ABOVE OF LESS THAN ONE (1) ACRE; THOSE SITES GREATER THAN ONE (1) ACRE ALSO MUST OBTAIN COVERAGE UNDER AN NPDES
4. THE SILT BARRIER SHALL BE INSTALLED ONE FOOT INSIDE THE PROPERTY LINE OR TWO FEET FROM THE SIDEWALK AS SHOWN ABOVE. FOR SILT BARRIER REQUIREMENTS AND INSTALLATION REQUIREMENTS, SEE STANDARD DETAIL–STAKED SILT BARRIER; DRAWING NO. S40–92.
5. INSPECT AND MAINTAIN ALL EROSION CONTROL DEVICES DAILY AND/OR AFTER A RAINFALL.
6. FOR CURB INLET FILTER REQUIREMENTS, SEE STANDARD DETAIL–CURB INLET FILTER FOR EROSION CONTROL AT CATCH BASIN; DWG. NO. S40–93, OR FOR HAY BALE REQUIREMENTS, SEE STANDARD DETAIL–HAY BALES FOR EROSION CONTROL AT CATCH BASIN; DWG. NO. S40–94.
7. EXISTING GRASS VEGETATION SHALL BE MAINTAINED AT A 10 INCH HEIGHT OR LESS, AS PER CITY CODE, CHAPTER 16; SECTIONS 16–1070 THRU 1076.
8. ALL SOIL EROSION CONTROL DEVICES MUST REMAIN IN PLACE UNTIL NEW VEGETATION IS ESTABLISHED. ALL DISTURBED AREAS SHALL BE SODDED AFTER FINAL GRADING.
9. TEMPORARY AGGREGATE ENTRANCE SHALL BE A MINIMUM 6" THICK OF STANDARD GRADATION SIZE #1 OR #2 RANGE AS PER FDOT SECTION 901, AND SHALL BE COMPACTED. AGGREGATE SHALL BE QUARTZ OR CRUSHED GRANITE. LIMEROCK, DOLOMITE OR SANDSTONE SHALL NOT BE ACCEPTABLE.
10. IF THERE IS NO EXISTING DRIVEWAY OR AN ALTERNATE INGRESS/EGRESS IS TO BE USED DURING CONSTRUCTION, THE METHOD OF ACCESS SHALL CONFORM TO THE "TEMPORARY AGGREGATE ENTRANCE" AS DESCRIBED ABOVE. IF THE AGGREGATE IS DEEMED UNSAFE, THE ALTERNATE INGRESS/EGRESS SHALL BE CONSTRUCTED OF 1" ASPHALTIC CONCRETE OVER 6" OF COMPACTED LIMEROCK BASE.
11. REGULARLY REMOVE COLLECTED SEDIMENT AND DEBRIS FROM THE SILT BARRIERS AND GUTTER FLOW LINE.
12. FOR ALL SAND AND SOIL STOCKPILES DUST/EROSION CONTROL MEASURES SHALL BE IMPLEMENTED.
13. KEEP CONSTRUCTION SITE LITTER/DEBRIS, AND LEAKING CONTAINERS IN ORDERLY CONTAINMENT AREAS.
14. SWEEP ENTRANCE AND ADJACENT ROADWAY WEEKLY TO KEEP FREE OF CONSTRUCTION DEBRIS.
15. SWEEP PAVED SURFACES ONLY. DO NOT WASH DOWN UNTIL SITE IS FINISHED.
16. SINGLE FAMILY INFILL LOTS MAY REQUIRE SILT FENCE AS ORDERED OR DIRECTED BY THE CITY BUILDING OFFICIAL.

SITE DEVELOPMENT AND CONSTRUCTION STAGING SITE EROSION CONTROL DETAIL
N.T.S. 6 D-01

LOCATION OF PUBLIC WATER SYSYEM MAINS IN ACCORDANCE WITH F.A.C. RULE 62-555.314

Other Pipe	Horizontal Separation	Crossings (1)	Joint Spacing @ Crossings (Full Joint Centered)
Storm Sewer, Stormwater Force Main, Reclaimed Water (2)	Water Main 3 ft. minimum	Water Main 12 inches is the minimum, except for storm sewer, then 6 inches is the minimum and 12 inches is preferred	Alternate 3 ft. minimum Water Main
Vacuum Sanitary Sewer	Water Main 10 ft. preferred 3 ft. minimum	Water Main 12 inches preferred 6 inches minimum	Alternate 3 ft. minimum Water Main
Gravity or Pressure Sanitary Sewer, Sanitary Sewer Force Main, Reclaimed Water (4)	Water Main 10 ft. preferred 6 ft. minimum (3)	Water Main 12 inches is the minimum, except for gravity sewer, then 6 inches is the minimum and 12 inches is preferred	Alternate 6 ft. minimum Water Main
On-Site Sewage Treatment & Disposal System	10 ft. minimum	---	---

(1) Water main should cross above other pipe. When water main must be below other pipe, the minimum separation is 12 inches.
(2) Reclaimed water regulated under Part III of Chapter 62-610, F.A.C.
(3) 3 ft. for gravity sanitary sewer where the bottom of the water main is laid at least 6 inches above the top of the gravity sanitary sewer.
(4) Reclaimed water not regulated under Part III of Chapter 62-610, F.A.C.

Disclaimer – This document is provided for your convenience only. Please refer to F.A.C. Rule 62-555.314 for additional construction requirements.

F.A.C RULE 62–555.314
N.T.S. 4 D-01

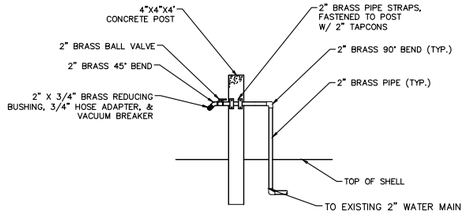

HOSE BIB DETAIL
N.T.S. 5 D-01

© 2025 KIMLEY-HORN AND ASSOCIATES, INC.
200 CENTRAL AVENUE, SUITE 600
ST. PETERSBURG, FL 33701
P: 727 547 3999
WWW.KIMLEY-HORN.COM REGISTRY NO. 35106

No.	Revisions	Date	By.

DESIGN ENGINEER: KYLE T. MATHENY, P.E.
FL LICENSE NUMBER 97287
DATE:

SCALE: AS NOTED
DESIGN: KTM
DRAWN: JTS
CHECKED: SNH

CIVIL DETAILS

CITY OF ST. PETE BEACH
PUMP & LIFT STATION REHABILITATIONS
PID# PS26-401-608-00
FLORIDA
PINELLAS COUNTY

DATE: NOVEMBER 2025
PROJECT NO. 148404108
SHEET NUMBER D-01

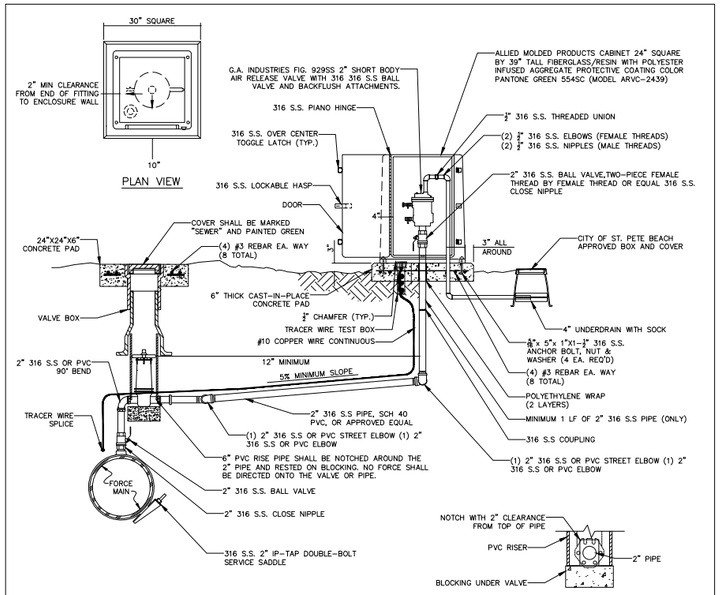

NOTES:

1. AIR RELEASE VALVES TO BE INSTALLED AT HIGH POINTS, OR WHERE AIR WOULD BE ENTRAPPED, ALONG 4" AND LARGER FORCE MAINS.
2. FORCE MAIN VERTICAL ALIGNMENT TO BE DESIGNED SUCH THAT THE MINIMUM NUMBER OF REQUIRED AIR RELEASE VALVES ARE INSTALLED.
3. ALL INCIDENTAL FITTINGS AND HARDWARE TO BE 316 STAINLESS STEEL.
4. ALL PIPE THREADS TO BE SEALED AIR TIGHT.
5. VENT PIPE TO BE LAID ACCURATELY ON SLOPE, WITHOUT HIGH OR LOW POINTS.
6. PRECAST CONCRETE PADS SHALL NOT BE USED
7. CONCRETE PAD SHALL BE TYPE I CONCRETE W/ 3,000 P.S.I., 28 DAY COMPRESSIVE STRENGTH.
8. DETAIL DEPICTED ABOVE IS NOT DRAWN TO SCALE (N.T.S).
9. FORCE MAIN I.D. LARGER THAN 20" SHALL REQUIRE 3" VALVES, PIPES, FITTINGS, AND APPURTENANCES.

SCALE

St. Pete Beach The Sunset Capital of Florida	CURRENT REVISION	2" ABOVE GROUND AIR RELEASE VALVE DETAIL	1 OF 1
	NOV 2025		

No.	Revisions	Date	By

Kimley»Horn
© 2025 KIMLEY-HORN AND ASSOCIATES, INC.
200 CENTRAL AVENUE, SUITE 600
ST. PETERSBURG, FL 33701
P: 727 547 3999
WWW.KIMLEY-HORN.COM REGISTRY NO. 35106

DESIGN ENGINEER: KYLE T. MATHENY, P.E.
FL LICENSE NUMBER 97287
DATE:

SCALE: AS NOTED
DESIGN: KTM
DRAWN: JTS
CHECKED: SNH

CIVIL DETAILS

CITY OF ST. PETE BEACH
PUMP & LIFT STATION REHABILITATIONS
PID# PS26-401-608-00
PINELLAS COUNY FLORIDA

DATE: NOVEMBER 2025

PROJECT NO. 148404108

SHEET NUMBER D-02

GENERAL NOTES

1. THESE NOTES ARE NOT INTENDED TO REPLACE THE PROJECT SPECIFICATIONS OR CONSTRUCTION DRAWING NOTES & DETAILS. IN CASE OF CONFLICT BETWEEN THE REQUIREMENTS OF THE SPECIFICATIONS/CONSTRUCTION DRAWINGS AND THESE NOTES, THE MORE STRINGENT REQUIREMENT SHALL APPLY.
2. THE GOVERNING CODE FOR THIS PROJECT IS THE FLORIDA BUILDING CODE, EIGHTH EDITION (2023).
3. THE CONTRACT DOCUMENTS HAVE MADE NO INTENT TO GIVE SPECIFIC INSTRUCTIONS CONCERNINC THE MEANS, METHODS, TECHNIQUES, SEQUENCES, PROCEDURES AND ASSIGNMENT OF WORK.
4. THE CONTRACTOR SHALL BE SOLELY RESPONSIBLE FOR SUPERVISING AND DIRECTING THE WORK. TO THE BEST OF OUR KNOWLEDGE, THE DRAWINGS AND SPECIFICATIONS COMPLY WITH THE APPLICABLE REQUIREMENTS OF THE GOVERNING BUILDING CODE.
5. CONSTRUCTION SHALL COMPLY WITH REQUIREMENTS OF THE GOVERNING BUILDING CODE AND ALL OTHER APPLICABLE FEDERAL, STATE AND LOCAL CODES, STANDARDS, REGULATIONS AND LAWS.
6. THE STRUCTURAL DRAWINCS ARE TO BE USED IN CONJUNCTION WITH THOSE OF THE OTHER TRADES. IF A CONFLICT EXISTS, THE MORE STRINGENT REQUIREMENT SHALL APPLY.
7. CONTRACTOR SHALL VISIT EACH SITE AND BE FAMILIAR WITH THE PROPOSED WORK. TAKE FIELD MEASUREMENTS AND VERIFY ALL FIELD CONDITIONS, AND REPORT ANY DISCREPANCIES TO THE ENGINEER PRIOR TO CONSTRUCTION.
8. CONTRACTOR SHALL REVIEW ALL CONTRACT DOCUMENTS, DIMENSIONS AND SITE CONDITIONS AND COORDINATE WITH FIELD DIMENSIONS AND PROJECT SHOP DRAWINGS PRIOR TO CONSTRUCTION. THE CONTRACTOR SHALL VERIFY ALL DIMENSIONS GIVEN ON STRUCTURAL DRAWINGS RELATING TO GRID LINES, COLUMN AND WALL LOCATIONS, STRUCTURAL AND FINISHED FLOOR ELEVATIONS, MEMBER SIZES, ETC, WITH THE DRAWINGS OF OTHER TRADES BEFORE STARTING ANY WORK. REPORT ANY DISCREPANCIES VERBALLY AND IN WRITING IMMEDIATELY TO ENGINEER PRIOR TO PROCEEDING WITH WORK. WORK SHALL NOT COMMENCE UNTIL THE DISCREPANCIES ARE RESOLVED. DO NOT CHANGE SIZE OR DIMENSIONS OF STRUCTURAL MEMBERS WITHOUT WRITTEN INSTRUCTIONS FROM THE PROJECT ENGINEER OF RECORD.
9. DISCREPANCIES, OMISSIONS OR VARIATIONS NOTED ON THE DRAWINGS OR IN THE SPECIFICATIONS DISCOVERED DURING AND AFTER THE BIDDING PERIOD SHALL BE IMMEDIATELY COMMUNICATED IN WRITING TO THE ENGINEER.
10. CONTRACTOR SHALL PROTECT EXISTING FACILITIES, STRUCTURES AND UTILITY LINES FROM DAMAGE AND SHALL PROTECT HIS WORK, ADJACENT PROPERTY AND THE PUBLIC. CONTRACTOR IS SOLELY RESPONSIBLE FOR JOB SITE SAFETY, CONSTRUCTION PROCEDURES AND DAMAGE OR INJURY DUE TO HIS ACT OR NEGLECT.
11. CONTRACTOR SHALL SUITABLY DOCUMENT EXISTING CONDITIONS PRIOR TO COMMENCEMENT OF THE WORK, AND SHALL RESTORE ALL DAMAGED OR DISTURBED AREAS TO MEET OR EXCEED ORIGINAL SITE CONDITIONS TO THE OWNER'S SATISFACTION.
12. DO NOT REPRODUCE THE STRUCTURAL DRAWINGS FOR USE AS ERECTION, PLACING, FABRICATION OR SHOP DRAWINGS.
13. SCALING OF DRAWINGS SHALL NOT BE USED TO OBTAIN OR VERIFY ANY DIMENSION SHOWN ON THE DRAWINGS. THE CONTRACTOR SHALL REFER TO THE ENGINEER FOR INSTRUCTION FOR ANY DIMENSION NOT GIVEN ON DRAWINGS.
14. SEE DRAWINGS OF OTHER TRADES FOR SIZE AND LOCATION OF POSSIBLE ADDITIONAL OPENINGS IN STRUCTURES NOT SHOWN IN STRUCTURAL DRAWINGS.
15. DETAILS LABELED "TYPICAL DETAILS" ON THE DRAWINGS APPLY TO ALL SITUATIONS THAT ARE THE SAME OR SIMILAR TO THOSE SPECIFICALLY DETAILED. SUCH DETAILS APPLY WHETHER OR NOT THEY ARE KEYED IN AT EACH LOCATION. QUESTIONS REGARDING APPLICABILITY OF TYPICAL DETAILS SHALL BE RESOLVED BY THE ENGINEER.
16. CONTRACTOR SHALL PROVIDE 48 HOURS MINIMUM ADVANCE NOTICE TO ENGINEER FOR ALL REQUIRED FIELD REVIEWS.
17. CONTRACTOR SHALL COORDINATE WITH OWNER ALL ITEMS TO BE CONTRACTED, SUPPLIED OR INSTALLED BY OWNER.
18. CONTRACTOR IS RESPONSIBLE FOR ALL BUILDING, PERMIT, REVIEW, LICENSE AND DEVELOPMENT FEES REQUIRED TO COMPLETE THE PROJECT.
19. CONTRACTOR SHALL ASSEMBLE AND INSTALL MATERIALS AND PRODUCTS IN STRICT ACCORDANCE WITH THE MANUFACTURER'S INSTRUCTIONS AND WITH INDUSTRY/ASSOCI ATION STANDARDS.
20. MATERIALS OR WORK DESCRIBED IN WORDS WHICH HAVE A WELL- KNOWN TECHNICAL TRADE MEANING SHALL BE HELD TO REFER TO THE RECOGNIZED STANDARD. ALL MATERIALS SHALL BE NEW, U. O.N.
21. PROVIDE FIRE STOPPERS AND SEAL ALL PIPE AND CONDUIT PENETRATIONS THROUGH FIRE RATED FLOORS, WALLS AND CEILINGS IN ORDER TO PREVENT THE PASSAGE OF SMOKE OR FIRE. ALL SEALANTS AND RELATED PRODUCTS SHALL COMPLY WITH THE MINIMUM FIRE RATED REQUIREMENTS FOR THE FLOORS, WALLS AND CEILINGS. ONLY NON - COMBUSTIBLE MATERIALS SHALL BE USED AT PENETRATIONS.
22. MINOR DEVIATIONS FROM THE DESIGN LAYOUT ARE ANTICIPATED AND SHALL BE CONSIDERED AS PART OF THE WORK, HOWEVER, NO CHANGES THAT ALTER THE CHARACTER INTENT OF THE DESIGN WILL BE MADE WITHOUT A CHANGE ORDER..

UTILITES

1. CONTRACTOR SHALL LOCATE IN THE FIELD ALL UTILITIES OCCURRING WITHIN THE LIMITS OF EXCAVATION.
2. CONTRACTOR SHALL CALL SUNSHINE STATE ONE CALL OF FLORIDA, INC. (1—800—432—4770) AT LEAST 48 HOURS BEFORE COMMENCEMENT OF ANY EXCAVATION OPERATIONS ON SITE.
3. DATA CONCERNING TYPE AND LOCATION OF UNDERGROUND AND OTHER UTILITIES IS NOT GUARANTEED TO BE ACCURATE OR ALL-INCLUSIVE. THE CONTRACTOR IS RESPONSIBLE FOR MAKING HIS OWN DETERMINATIONS AS TO THE TYPE AND LOCATION OF UNDER GROUND AND OTHER UTILITIES AS MAY BE NECESSARY TO AVOID DAMAGE THERETO.

DOCUMENTS AND LIMITATIONS

1. THE DRAWINGS, CALCULATIONS, AND REPRODUCTIONS RELATING TO THE STRUCTURAL PART OF THE PROJECT ARE INSTRUMENTS OF SERVICE TO BE USED FOR THIS PROJECT ONLY.
2. IT IS UNDERSTOOD THAT THE ENGINEER MAKES NO WARRANTY, EITHER EXPRESSED OR IMPLIED, AS TO THE FINDINGS, DESIGNS, RECOMMENDATIONS, SPECIFICATIONS, OR PROFESSIONAL ADVICE EXCEPT THAT THESE INSTRUMENTS OF SERVICE HAVE BEEN PREPARED IN ACCORDANCE WITH CURRENT GENERALLY ACCEPTED PROFESSIONAL ENGINEERING PRACTICES.

SHOP DRAWINGS AND OTHER SUBMITTALS

1. REVIEW OF SUBMITTALS BY THE ENGINEER IS FOR GENERAL CONFORMANCE WITH THE DESIGN CONCEPT AS PRESENTED BY THE CONTRACT DOCUMENTS. NO DETAILED CHECK OF QUANTITIES OR DIMENSIONS WILL BE MADE. ONLY THOSE SUBMITTALS REQUIRED TO BE SUBMITTED WILL BE REVIEWED. ALL OTHERS WILL BE RETURNED WITHOUT REVIEW.
2. ALL SUBMITTALS HALL BE ACCOMPANIED BY A LETTER OF TRANSMITTAL. CONTRACTOR'S SUBMITTAL NUMBER SHALL BE INDICATED ON TRANSMITTAL. DO NOT COMBINE DIFFERENT SUBMITTALS ON THE SAME TRANSMITTAL. SUBMIT SHOP DRAWINGS IN A TIMELY MANNER, CONSISTENT WITH THE ABOVE, AND PRIOR TO FABRICATION, INSTALLATION OR COMMENCEMENT OF THE WORK. ALLOW UP TO 10 WORKING DAYS FOR ENGINEER TO REVIEW AND RETURN SHOP DRAWINGS. NUMBER OF COPIES OF EACH SUBMITTED SHOP DRAWING SHALL BE SUFFICIENT FOR ENGINEER TO RETAIN 2 COPIES.
3. ALL SUBMITTALS MUST BEAR EVIDENCE OF CONTRACTOR'S REVIEW (INCLUDIMG COMPANY STAMP AND DATED SIGNATURE OF REVIEWER) AND MUST BE APPROVED OR APPROVED AS NOTED BY HIM PRIOR TO SUBMITTING TO THE ENGINEER.
4. ALL CHANGES AND ADDITIONS MADE ON RESUBMITTALS MUST BE CLEARLY FLAGGED AND NOTED. THE PURPOSE OF THE RESUBMITTALS MUST BE CLEARLY NOTED ON THE LETTER OF TRANSMITTAL. ENGINEER REVIEW WILL BE LIMITED TO THOSE ITEMS CAUSING THE RESUBMITTAL.
5. DO NOT REPRODUCE THE STRUCTURAL DRAWINGS FOR USE AS ERECTION, PLACING OR FABRICATION DRAWINGS.
6. SUBMITTALS NOT MEETING THE ABOVE CRITERIA OR SUBMITTED AFTER FABRICATION WILL NOT BE REVIEWED.
7. SUBMITTALS:
   AS A MINIMUM, THE FOLLOWING SHALL BE SUBMITTED, AS APPLICABLE, TO THE ENGINEER FOR REVIEW AND COMPLIANCE WITH THE INTENT OF THE CONTRACT DOCUMENTS PRIOR TO FABRICATION, INSTALLATION, OR COMMENCEMENT OF THE WORK:
   A. CONCRETE, MORTAR AND GROUT MIX DESIGNS, INCLUDING ADMIXTURE DATA SHEETS.
   B. BILL OF REINFORCING AND LAYOUT.
   C. MISCELLANEOUS METAL FABRICATIONS.
   D. HANDRAIL, GUARDRAIL AND STAIR DETAILS, INCLUDING SUPPORT MEMBERS CONNECTIONS, AND CALCULATIONS
8. WELDER CERTIFICATIONS FOR ALL WELDERS SHALL BE SUBMITTED. CERTIFICATIONS MUST HAVE BEEN ISSUED WITHIN 3 YEARS PRIOR TO PERFORMING WORK ON THE PROJECT.
9. REQUESTS FOR SUBSTITUTIONS SHALL BE SUBMITTED IN WRITING TO THE ENGINEER FOR REVIEW. SUBMIT 3 COPIES OF ALL PRODUCT DATA AND CUT SHEETS AS NECESSARY TO SHOW COMPLIANCE WITH THE PROJECT REQUIREMENTS. CONTRACTOR SHALL BEAR THE BURDEN OF OBTAINING AUTHORIZATION FOR USE OF ITEMS TO BE SUBSTITUTED. ENGINEER'S DECISION REGARDING SUBSTITUTION SHALL BE FINAL.
10. FOR ADDITIONAL CRITERIA APPLICABLE TO SUBMITTALS REQUIRING ENGINEERING INPUT BY A DELEGATED ENGINEER, SEE BELOW.

DESIGN LOADS

1. SEE INDIVIDUAL PLAN SHEETS FOR DESIGN CRITERIA APPLICABLE TO SPECIFIC SITE COMPONENTS.
2. LOADS SHALL MEET THE MINIMUM DESIGN REQUIREMENTS SET FORTH IN THE FLORIDA BUILDING CODE, EIGHTH EDITION (2023), UNLESS A MORE STRINGENT REQUIREMENT IS INDICATED.
3. FILL HEIGHTS AS SHOWN ON THE PLANS.
4. SEE THIS SHEET FOR SPECIFIC DESIGN LOADS.
5. IT IS THE CONTRACTOR'S RESPONSIBILITY TO PROVIDE FOR SUPPORTING OF CONSTRUCTION LOADS THAT EXCEED THE ABOVE LOADINGS.

FOUNDATIONS/SLAB ON GRADE

1. A REPORT OF GEOTECHNICAL EXPLORATION HAS BEEN PREPARED FOR THIS PROJECT BY ARDAMAN & ASSOCIATES, INC., FILE NO. 25-9711, DATED MARCH 11, 2025.
2. FOUNDATION CONSTRUCTION, SITE PREPARATION AND SOIL PREPARATION BELOW FOUNDATION SHALL BE PERFORMED IN ACCORDANCE WITH REPORT OF GEOTECHNICAL EXPLORATION.
3. FOUNDATIONS SHALL BE SUPPORTED ON COMPACTED MATERIAL WITH A MINIMUM GROSS SOIL BEARING CAPACITY OF 2000 PSF, U.O.N. THE MODULUS OF VERTICAL SUBGRADE REACTION (K) FOR THE SLAB BEARING SOILS IS ASSUMED TO BE ON THE ORDER OF 100 PSI PER INCH OF VERTICAL DEFLECTION (PCI).
4. THE CONTRACTOR SHALL NOTIFY THE ENGINEER IMMEDIATELY OF ANY EXISTING FOUNDATION CONDITIONS OR DETAILS THAT ARE IN CONFLICT WITH THOSE INDICATED AND SHOWN ON THE DRAWINGS.
5. THE CONTRACTOR SHALL BE RESPONSIBLE FOR THE PROTECTION, SHORING, UNDERPINNING, AND ISOLATION, ETC. OF ALL EXISTING FOUNDATION CONDITIONS AS REQUIRED TO PREVENT ANY DISTURBANCE TO EXISTING FOUNDATION CONDITIONS AS A RESULT OF THE WORK.
6. ANCHOR BOLTS SIDE SLEEVES AND OTHER EMBEDDED ITEMS ARE TO BE PLACED IN ACCORDANCE WITH THE CONTRACT DOCUMENTS.
7. TO HELP CONTROL SHRINKAGE CRACKS, AT SLAB ON GRADE PENETRATIONS COMPRISED OF BOX— OUTS AND CLOSELY SPACED OR BUNDLED CONDUITS, PIPES, ETC., PROVIDE DIAGONAL #4 BARS ABOUT PERIMETER OF PENETRATION AREA IN ADDITION TO TYPICAL SLAB REINFORCEMENT. ORIENT BARS NORMAL TO ANTICIPATED PATH OF CRACK FORMATION. BAR ENDS SHALL EXTEND 12 INCHES MINIMUM BEYOND OVERLAPS WITH ADJACENT BARS. PROVIDE 2 INCH CLEAR COVER TO TOP SURFACE OF SLAB.
8. CHAIR WELDED WIRE FABRIC (WWF) AND REINFORCING BARS DURING CONCRETE PLACEMENT TO ENSURE PROPER POSITION IN SLAB. CHAIRS SHALL BE OF NON-CORROSIVE MATERIAL INCLUDING, BUT NOT LIMITED TO, FIBER GLASS, PLASTIC, AND CONCRETE BLOCK.
9. FLOOR AND FOUNDATION SLAB SHALL BE WET CURED FOR A MINIMUM OF 7 DAYS PRIOR TO FURTHER CONSTRUCTION.
10. CRACK CONTROL JOINTS SHALL BE SAWCUT IN ACCORDANCE WITH ACI 301 AND ACI 302. COMPLETE SAWCUTTING WITHIN 12 HOURS AFTER CONCRETE PLACEMENT.
11. UNLESS OTHERWISE NOTED, PLACE CRACK CONTROL JOINTS AT 20 FEET MAX. SPACING SO AS TO LIMIT SURFACE AREA BETWEEN JOINTS TO 400 SQ. FT., AND SUCH THAT THE LENGTH — TO— WIDTH RATIO IS LESS THAN 1.5.
12. PLACE CRACK CONTROL JOINTS AT 10 FEET MAX. SPACING FOR SIDEWALKS AND/OR WALKWAYS, SUCH THAT THE LENGTH — TO— WIDTH RATIO IS LESS THAN 1.5.
13. SEE 'REINFORCED CONCRETE" NOTES FOR ADDITIONAL INFORMATION PERTAINING TO CONCRETE AND REINFORCEMENT.

DESIGN:
FLORIDA BUILDING CODE, EIGHTH EDITION (2023)

WIND LOADS - PER ASCE 7-22:

WIND SPEED (ULTIMATE)	160 MPH
RISK CATEGORY	III
EXPOSURE	D

DEAD LOAD:

EMPTY WEIGHT OF GENERATOR ASSEMBLY	3,434 LBS

LIVE LOAD:

GRATING AND CATWALK	100 PSF
STAIRS	100 PSF
PLATFORM LIVE LOADS	100 PSF
FUEL OF GENERATOR ASSEMBLY	1,270 LBS.

FLOOD LOAD:
SEE LIFT STATION ELEVATION TABLE
ON SHEET S1.1

DEFLECTION LIMIT FOR GRATING AND WALKWAYS = 0.25"

SUBMITTALS REQUIRING ENGINEERING INPUT BY DELEGATED (SPECIALTY) ENGINEER

1. DELEGATED ENGINEER:
   A. DEFINITION — A FLORIDA PROFESSIONAL ENGINEER WHO UNDERTAKES A SPECIALTY SERVICE AND PROVIDES SERVICES OR CREATIVE WORK (DELEGATED ENCINEERING DOCUMENT) REGARDING A PORTION OF THE ENGINEERING PROJECT. THE DELEGATED ENGINEER IS THE ENGINEER OF RECORD FOR THAT PORTION OF THE ENGINEERING PROJECT.
   B. SHALL BE: (1) AN INDEPENDENT CONSULTANT, (2) AN EMPLOYEE OR OFFICER OF AN ENTITY SUPPLYING COMPONENTS TO A FABRICATOR OR CONTRACTOR, SO LONG AS THE ENGINEER ACTS AS AN INDEPENDENT CONSULTANT OR THROUGH A DULY QUALIFIED ENGINEERING CORPORATION, OR (3) AN EMPLOYEE OR OFFICER OF A FABRICATOR OR CONTRACTOR, SO LONG AS THE ENGINEER ACTS AS AN INDEPENDENT CONSULTANT OR THROUCH A DULY QUALIFIED ENCINEERIN C CORPORATION.
2. SUBMITTALS FOR CUSTOM DESIGNED, MANUFACTURED OR FABRICATED LOAD - CARRYING ITEMS AND CUSTOM FABRICATED ITEMS WHICH ARE REQUIRED BY CODES OR STANDARDS TO RESIST FORCES AND STRESSES, INCLUDING THEIR CONNECTIONS, ANCHORAGES AND ATTACHMENTS REQUIRE A DELEGATED ENGINEER.
3. AS A MINIMUM, THE FOLLOWING SYSTEMS AND COMPONENTS REQUIRE FABRICATION AND ERECTION DRAWINGS WITH INPUT BY A DELEGATED ENGINEER:
   A. REDESIGN OF ANY STRUCTURAL ELEMENTS OR CONNECTIONS.
   B. TEMPORARY SHORING.
   C. HANDRAILS, GUARDRAILS, CATWALK /WALKWAYS, AND STAIRS.
4. FOR EACH CATEGORY OF SUBMITTALS REQUIRING INPUT FROM A DELEGATED ENGINEER, THE CONTRACTOR SHALL ATTACH TO THE FIRST SUBMITTAL A SIGNED AND SEALED LETTER FROM THE RESPONSIBLE DELEGATED ENGINEER STATING "I CERTIFY THAT THE DESIGN AND DRAFTING OF THE SHOP DRAWINGS WHICH ARE SIGNED AND SEALED BY ME WERE PREPARED UNDER MY DIRECT SUPERVISION AND CONTROL, AND TO THE BEST OF MY KNOWLED BE, THE SHOP DRAWINGS COMPLY WITH THE APPLICABLE MINIMUM BUILDING CODES AND THE CONTRACT DOCUMENTS."
5. SUBMITTALS SHALL CLEARLY IDENTIFY THE SPECIFIC PROJECT AND APPLICABLE CODES, LIST THE DESIGN CRITERIA, AND SHOW ALL DETAILS AND PLANS NECESSARY FOR PROPER FABRICATION AND INSTALLATION. CALCULATIONS AND SHOP DRAWINGS SHALL IDENTIFY SPECIFIC PRODUCTS UTILIZED. GENERIC PRODUCTS WILL NOT BE ACCEPTED.
6. SHOP DRAWINGS AND CALCULATIONS REQUIRE THE SEAL, DATE AND SIGNATURE OF THE DELEGATED ENGINEER. COMPUTER PRINTOUTS ARE AN ACCEPTABLE SUBSTITUTE FOR MANUAL COMPUTATIONS PROVIDED THEY ARE ACCOMPANIED BY SUFFICIENT DESCRIPTIVE INFORMATION TO PERMIT THEIR PROPER EVALUATION. SUCH DESCRIPTIVE INFORMATION SHALL BEAR THE IMPRESSED SEAL AND SIGNATURE OF THE DELEGATED ENGINEER AS AN INDICATION THAT HE HAS ACCEPTED RESPONSIBILITY FOR THE RESULTS.
7. CALCULATIONS ARE THE SOLE RESPONSIBILITY OF THE DELEGATED ENGINEER. CALCULATIONS ARE SUBMITTED TO THE ENGINEER FOR HIS RECORDS.
8. CATALOG INFORMATION ON STANDARD PRODUCTS (i. e. °'CUT SHEETS") DOES NOT REQUIRE THE SEAL OF A DELEGATED ENGINEER.
9. REVIEW BY THE PROJECT ENGINEER OF RECORD OF SUBMITTALS IS LIMITED TO VERIFYING THE FOLLOWING:
   A. THAT THE SPECIFIED STRUCTURAL SUBMITTALS HAVE BEEN FURNISHED.
   B. THAT THE STRUCTURAL SUBMITTALS HAVE BEEN SIGNED AND SEALED BY THE DELEGATED ENGINEER.
   C. THAT THE DELEGATED ENGINEER HAS UNDERSTOOD THE DESIGN INTENT AND HAS USED THE SPECIFIED STRUCTURAL CRITERIA. (NO DETAILED CHECK OF CALCULATIONS WILL BE MADE.)
   D. THAT THE CONFIGURATION SET FORTH IN THE STRUCTURAL SUBMITTALS IS CONSISTENT WITH THE CONTRACT DOCUMENTS. (N 0 DETAILED CHECK OF DIMENSION S OR QUANTITIES WILL BE MADE.)
10. SUBMITTALS NOT MEETING THE ABOVE CRITERIA, OR SUBMITTED AFTER FABRICATION, WILL NOT BE REVIEWED.

No.	Revisions	Date	By

Kimley»Horn

© 2025 KIMLEY-HORN AND ASSOCIATES, INC.
200 CENTRAL AVENUE, SUITE 600
ST. PETERSBURG, FL 33701
P. 727 547 3999
WWW.KIMLEY-HORN.COM REGISTRY NO. 35106

DESIGN ENGINEER:
SETH E. SCHMID, P.E.
FL LICENSE NUMBER
54640
DATE:

SCALE: AS NOTED
DESIGN: SES
DRAWN: BTA
CHECKED:

STRUCTURAL GENERAL NOTES

CITY OF ST. PETE BEACH
PUMP & LIFT STATION
REHABILITATIONS
PID# PS26-401-608-00
FLORIDA
PINELLAS COUNTY

DATE:
NOVEMBER 2025

PROJECT NO.
148404108

SHEET NUMBER
S-0.1

K:\STP_Civil\148404 - City of St. Pete Beach\108 - Lift Station Rehabilitation (LS 4, 5, 7, 9, 10, 11, 12, 13, 14, 15, 16 and SW LS 35)\CADD\Revit\LS 4, 7, 10\Structural\148404108 - LS Rehab Structural.rvt

WELDED WIRE FABRIC (WWF)

1. WWF SHALL BE IN ACCORDANCE WITH ASTM A185, PLAIN (SMOOTH) TYPE, IN FLAT SHEETS.
2. ALL WWF SHALL BE ACCURATELY PLACED, RIGIDLY SUPPORTED AND FIRMLY TIED IN PLACE WITH BAR SUPPORTS AND SPACERS. DO NOT PLACE WWF ON GRADE AND SUBSEQUENTLY RAISE INTO POSITION DURING CONCRETE PLACEMENT.
3. FOR SLABS ON GRADE, EXTEND WWF TO WITHIN 2 INCHES OF THE CONCRETE EDGE.
4. LAP EDGES AND ENDS OF WWF SHEETS A MINIMUM OF ONE MESH SPACING PLUS 2 INCHES.
5. LOCATE WWF 2 INCHES BELOW THE TOP SURFACE OF THE SLAB.
6. SEE "SLABS ON GRADE" NOTES ABOVE FOR ADDITIONAL REINFORCEMENT REQUIRED AT SLAB PENTRATIONS.

FORM WORK AND SHORING

1. PROVIDE, AS A PACKAGE, SHORING DRAWINGS PREPARED BY OR UNDER THE DIRECT SUPERVISION OF A DELEGATED ENGINEER.
2. FORMS SHALL CONFORM TO THE SHAPE, LINES AND DIMENSIONS OF THE MEMBERS AS CALLED FOR IN THE PLANS, AND SHALL BE SUBSTANTIAL AND SUFFICIENTLY TIGHT TO PREVENT LEAKAGE OF MORTAR. THEY SHALL BE PROPERLY BRACED OR TIED TOGETHER SO AS TO MAINTAIN POSITION AND SHAPE.
3. DESIGN FORMS AND SHORES FOR HORIZONTAL CONCRETE MEMBERS FOR ALL IMPOSED DEAD AND LIVE LOADS, BUT NOT LESS THAN DEAD LOAD (INCLUDING FILL HEIGHTS IF APPLICABLE) PLUS AASHTO HS20— 44 TRUCK CONSTRUCTION LIVE LOAD, WHERE APPLICABLE. DESIGN WOOD SHORES WITH A SAFETY FACTOR OF 3, AND METAL SHORES WITH A SAFETY FACTOR OF 2.
4. REMOVAL OF FORMWORK IS THE SOLE RESPONSIBILITY OF THE CONTRACTOR, HOWEVER FORMS SHALL NOT BE REMOVED LESS THAN 24 HOURS AFTER CONCRETE PLACEMENT. REMOVE FORMS IN SUCH A MANNER AS TO INSURE JOB SAFETY AND TO PREVENT DAMAGE TO AND CREEP DEFLECTION OF THE STRUCTURE.
5. THE SHORING IS TO BE INSPECTED BY THE DELEGATED ENGINEER OR HIS AUTHORIZED REPRESENTATIVE. PRIOR TO EACH CONCRETE POUR, HE SHALL SUBMIT A WRITTEN INSPECTION REPORT TO THE SPECIAL INSPECTOR AND CONTRACTOR STATING THAT THE WORK IS IN GENERAL COMPLIANCE WITH THE SHORING DRAWINGS. THE FIELD REPORTS SHALL BE SIGNED BY THE INDIVIDUAL CONDUCTING THE INSPECTION. COPIES OF THE FIELD REPORTS SHALL BE SUBMITTED EVERY WEEK TO THE ENGINEER, SPECIAL INSPECTOR AND BUILDING OFFICIAL UNDER A COVER LETTER SIGNED, SEALED AND DATED BY THE DELEGATED ENGINEER.
6. THE SHORING REPORT SHALL CONTAIN, AS A MINIMUM, THE FOLLOWING:
   A. NAME AND LOCATION OF PROJECT, NAME OF DELEGATED ENGINEER AND FIELD REPRESENTATIVE, PERMIT NUMBER, DATE, TIME OF DAY, WORKING CONDITIONS (INCLUDING WEATHER AND TEMPERATURE).
   B. ITEMS REQUIRING CORRECTIONS.
   C. ACCEPTED DEVIATIONS FROM SHORING DRAWINGS.
   D. AREAS ACCEPTED AND RELEASED FOR CONCRETE POURS.
7. AS SOON AS FORMS ARE REMOVED, ALL IRREGULAR PROJECTIONS SHALL BE CHIPPED OFF FLUSH WITH THE CONCRETE SURFACES. ALL VOIDS OR HONEYCOMBING SHALL BE POINTED UP WITH GROUT AND TROWELED FLUSH WITH THE CONCRETE SURFACE. ALL FORM TIES SHALL BE REMOVED TO A DEPTH OF 1-1/2 INCHES MINIMUM AND GROUTED FLUSH WITH THE CONCRETE SURFACE.

CLEAN —UP

1. THE CONTRACTOR SHALL AT ALL TIMES KEEP THE SITE FREE FROM ACCUMULATION OF WASTE MATERIALS OR RUBBISH CAUSED BY HIS EMPLOYEES.
2. CONTRACTOR SHALL VISUALLY INSPECT INTERIOR AND EXTERIOR SURFACES AND REMOVE ALL TRACES OF SOIL, WASTE MATERIALS, SMUDGES, STAINS, SPLASHED MATERIAL, PAINT DROPPINGS AND OTHER FOREIGN MATTER PRIOR TO COMPLETION OF THE WORK.

RECORD DRAWINGS

1. CONTRACTOR SHALL PREPARE AND MAINTAIN CURRENT A SET OF REDLINED DRAWINGS SHOWING ALL DEVIATIONS AND CHANGES MADE TO THE CONSTRUCTION DRAWINGS
2. DRAWINGS SHALL BE MADE AVAILABLE TO THE ENGINEER FOR REVIEW UPON REQUEST AT ANY TIME DURING THE COURSE OF THE PROJECT.
3. CONTRACTOR SHALL SUBMIT THE ORIGINAL DRAWINGS TO THE ENGINEER WITHIN ONE WEEK FROM THE DATE OF FINAL COMPLETION, AND PRIOR TO OWNER'S ACCEPTANCE OF CONTRACTOR'S FINAL IN VOICE.
4. SUBMITTED DRAWINGS WILL REMAIN THE PROPERTY OF THE ENGINEER.

BID ITEMS

1. PAYMENT FOR ALL INCIDENTALS IS TO BE INCLUDED IN THE PRICE BID FOR CONTRACT ITEMS.
2. COST FOR REMOVAL AND DISPOSAL OF VARIOUS MATERIALS, WHERE REQUIRED, SHALL BE INCLUDED IN THE PRICE BID FOR CONTRACT ITEMS.

ALUMINUM

1. ALUMINUM FABRICATION SHALL BE IN CONFORMANCE WITH THE ALUMINUM ASSOCIATION, INC. "SPECIFICATIONS FOR ALUMINUM STRUCTURES" (LATEST EDITION).
2. UNLESS NOTED OTHERWISE, MATERIALS SHALL BE:
   A. PLATE & SHEET — ASTM B 209; 6061— T6, 6061— T651 ALLOY.
   B. EXTRUDED SHAPES — ASTM B221; 6061— T6, 6061— T651 ALLOY. PIPE SECTIONS ARE SCHEDULE 40 U.N.0..
   C. CASTINGS — ASTM B108; 214 ALLOY.
3. ALUMINUM SHALL BE SEPARATED FROM DIRECT CONTACT WITH OTHER MATERIALS (STEEL, CONCRETE, ETC.) BY PRESSURE SENSITIVE TAPE, BITUMASTIC COATING, OR OTHER PROTECTIVE METHOD SUBMITTED BY THE CONTRACTOR AND APPROVED BY THE OWNER'S CONSTRUCTION REPRESENTATIVE.
4. WELDING ALUMINUM SHALL CONFORM TO AWS D1.2 & AWS A5.10 AND THE REQUIREMENTS OF THE ALUMINUM ASSOCIATIONS "ALUMINUM DESIGN MANUAL" (LATEST EDITION) TABLE 7.1—1 FOR WELD FILLERS FOR WROUGHT ALLOYS.
5. REFERENCE PROJECT SPECIFICATIONS FOR HANDRAIL & GUARDRAIL REQUIREMENTS.
6. FASTENERS: UNLESS NOTED OTHERWISE, ALL FASTENERS SHALL BE TYPE 316 STAINLESS STEEL MEETING THE REQUIREMENTS OF ASTM F593 OR ASTM A193 FOR BOLTS AND ASTM F594 OR ASTM A194 FOR NUTS.

REINFORCING STEEL

1. REINFORCING STEEL SHALL BE OF DOMESTIC MANUFACTURE AND IN ACCORDANCE WITH ASTM A615 WITH SUPPLEMENT, GRADE 60; MINIMUM WORKING STRESS OF 24, 000 PSI.
2. TOLERANCES FOR REINFORCING BAR FABRICATION SHALL CONFORM TO THE CURRENT CRSI MANUAL OF STANDARD PRACTICE.
3. ALL REINFORCING STEEL SHALL BE UNCOATED (BLACK) DEFORMED BARS AND SHALL BE FREE FROM LOOSE RUST, SCALE OR OTHER COATINGS.
4. ALL REINFORCING STEEL SHALL BE ACCURATELY PLACED, RIGIDLY SUPPORTED AND FIRMLY TIED IN PLACE WITH BAR SUPPORTS AND SPACERS. VERIFY THAT PLACEMENT OF REINFORCING STEEL WILL NOT CONFLICT WITH SUBSEQUENT INSTALLATION OF ANCHOR BOLTS, FASTENERS OR FIELD — DRILLED COMPONENTS.
5. UNLESS OTHERWISE NOTED, LAP BOTTOM STEEL OVER STRUCTURAL SUPPORTS AND TOP STEEL AT MIDSPAN.
6. ALL LAP LENGTHS SHALL BE IN ACCORDANCE WITH ACI 318 AND CRSI STANDARD PRACTICES LATEST EDITIONS, U.O.N.
7. HOOK DISCONTINUOUS ENDS OF ALL TOP BARS AND ALL BARS IN WALLS U.O.N.
8. ACI STANDARD HOOKS SHALL BE USED AS A MINIMUM, U. O.N.
9. ALL DIMENSIONS PERTAINING TO LOCATION OF REINFORCING BARS ARE TO CENTERLINE OF BARS EXCEPT WHERE THE CLEAR DIMENSION IS SHOWN TO FACE OF CONCRETE.
10. SUBMIT SHOP DRAWINGS TO ENGINEER FOR REVIEW PRIOR TO FABRICATING REINFORCING STEEL. DO NOT REPRODUCE THE STRUCTURAL DRAWINGS FOR USE AS PLACING DRAWINGS OR SHOP DRAWINGS.
11. PROVIDE CONSTRUCTION JOINTS IN ACCORDANCE WITH ACI 318 AND SUBMIT DRAWINGS SHOWING LOCATIONS AND DIRECTION OF POUR FOR ENGINEER'S REVIEW. PROVIDE KEYWAYS, WATERSTOPS AND ADEQUATE DOWELS AT ALL CONSTRUCTION JOINTS IN ACCORDANCE WITH THE STRUCTURAL DRAWINGS.
12. PROVIDE REINFORCING STEEL ERECTOR WITH A SET OF STRUCTURAL DRAWINGS FOR FIELD USE. INSPECT REINFORCING STEEL PLACEMENT FROM SHOP DRAWINGS.

REINFORCED CONCRETE

1. ALL CONCRETE MATERIALS, PLACING AND HANDLING SHALL BE IN ACCORDANCE WITH AMERICAN CONCRETE INSTITUTE PUBLICATIONS ACI 301, ACI 318 - LATEST EDITIONS.
2. CURING OF CONCRETE SHALL BE IN STRICT ACCORDANCE WITH ACI 301 PROVISIONS.
3. ALL STRUCTURAL CONCRETE SHALL HAVE A MINIMUM 28-DAY COMPRESSIVE STRENGTH OF OF 4000 PSI (MAX. W/CM=0.40).
4. USE NORMAL WEIGHT CONCRETE (135 PCF MIN.) FOR ALL STRUCTURAL MEMBERS. DO NOT USE CALCIUM CHLORIDE IN ANY CONCRETE.
5. PROVIDE A 4 INCH SLUMP WITH A TOLERANCE OF +/- 1 INCH. FOR WALLS 8 INCHES OR LESS IN THICKNESS, PROVIDE 5 INCH SLUMP WITH A TOLERANCE OF + 1/2 INCH AND -1 INCH.
6. IF CONCRETE IS PUMPED, SLUMP MAY BE INCREASED TO 6 INCHES AT THE TRUCK, PROVIDED THE SLUMP SPECIFIED ABOVE IS MAINTAINED AT THE DISCHARGE END. USE A MINIMUM 4 INCH PUMP. FOR PUMPED CONCRETE, TAKE CONCRETE SAMPLES FOR SLUMP TEST AT END OF TRUCK CHUTE AND AT DISCHARGE END OF HOSE, AND TAKE SAMPLES FOR CYLINDER TESTING AT DISCHARGE END OF HOSE.
7. WATER SHALL NOT BE ADDED TO CONCRETE AT THE JOBSITE UNLESS SPECIFIC AUTHORIZATION IS INDICATED ON THE DELIVERY TICKET. NOTIFY ENGINEER OF TOTAL QUANTITY OF WATER ADDED TO ANY TRUCK. REPEAT NECESSARY TESTING IF WATER IS ADDED AFTER INITIAL SAMPLING.
8. COARSE AGGREGATE SHALL CONFORM TO ASTM C33. PEAROCK AGGREGATE SHALL NOT BE USED.
9. ALL ANCHOR BOLTS SHALL BE ACCURATELY SET WITHIN A TOLERANCE OF +/- 1/16 INCH IN BOTH ELEVATION AND LOCATION.
10. ALL CONCRETE SHALL BE PLACED IN THE DRY. ALL FORMS SHALL BE FREE OF STANDING WATER.
11. ALL CONCRETE SHALL BE VIBRATED IN PLACE IN ACCORDANCE WITH ACI RECOMMENDED PRACTICES. NO PLACING OF CONCRETE WILL BE COMMENCED UNLESS THERE ARE A MINIMUM OF TWO OPERABLE CONCRETE VIBRATORS ON THE JOB SITE.
12. CONCRETE COVER OVER REINFORCING STEEL SHALL BE AS FOLLOWS, U.O.N.:
    A. CONCRETE CAST AGAINST EARTH OR EXPOSED TO LIQUID: 3 IN.
    B. ALL OTHER CONCRETE: 2 IN.
13. PROVIDE 3/4 INCH CHAMFERS ON ALL EXPOSED EDGES, EXCEPT AS OTHERWISE NOTED.
14. FORM TIES AND REINFORCING BAR SUPPORTS SHALL BE OF NON — CORROSIVE MATERIAL INCLUDING, BUT NOT LIMITED TO, FIBER GLASS, PLASTIC, AND CONCRETE BLOCK. BAR SUPPORTS PLACED ATOP VAPOR BARRIERS SHALL BE CONCRETE BLOCK.
15. ANY TIES, STRAPS OR OTHER METALLIC FORMWORK ITEMS SHALL BE REMOVED TO A DEPTH OF 1—1/2 INCHES MINIMUM BELOW FINISHED CONCRETE SURFACE. CONCRETE SHALL BE REPAIRED IN ACCORDANCE WITH ACI 301.
16. CONCRETE FINISHES:
    A. FORMED SURFACES SHALL RECEIVE A SMOOTH — FORM FINISH IN ACCORDANCE WITH ACI 301. OFFSET BETWEEN ADJACENT PIECES OF FORMWORK FACING MATERIAL SHALL NOT EXCEED "CLASS A" TOLERANCE REQUIREMENTS OF ACI 117 (i.e. 1/8 INCH MAX. OFFSET).
    B. SLAB SURFACES SHALL RECEIVE A TROWELED FINISH IN ACCORDANCE WITH ACI 301. FINISH TOLERANCES SHALL BE IN ACCORDANCE WITH "VERY FLAT" CLASSIFICATION REQUIREMENTS OF ACI 117 (i.e. 1/8 INCH MAX. IN 10 FEET).
    C. WHERE A NONSLIP FINISH IS REQUIRED (WALKWAY SURFACES), GIVE THE SURFACE A BROOM FINISH OR DRY— SHAKE APPLICATION OF FINELY CRUSHED ABRASIVE PARTICLES.
17. COORDINATE SIZE, TYPE AND LOCATION OF ALL PENETRATIONS, CONDUIT, CHAMFERS AND EMBEDDED ITEMS PRIOR TO CONCRETE PLACEMENT.
18. DO NOT IMPOSE SERVICE LOADS ON CONCRETE ELEMENTS UNTIL THE CONCRETE HAS REACHED ITS SPECIFIED MINIMUM COMPRESSIVE STRENGTH.
19. ALL GROUT FOR BASE PLATES SHALL BE HIGH STRENGTH NON — SHRINK, NON— METALLIC.
20. CONTRACTOR SHALL SUBMIT A CONSTRUCTION JOINT PLAN FOR THE ENGINEER'S REVIEW PRIOR TO CONSTRUCTION.

ABBREVATION S

ALT	ALTERNATE
A.F.F	ABOVE FINISH FLOOR
C. J	CONTROL JOINT
CL	CENTERLINE
CLR	CLEAR
CMU	CONCRETE MASONRY UNIT
CONC	CONCRETE
CONST	CONSTRUCTION
CONT	CONTINUOUS
EA	EACH
E.F.	EACH FACE
E.J	E XPAN SION JOINT
EL.	ELEVATION
EQ	EQUAL
E.W.	EACH WAY
F.F.E.	FINISHED FLOOR ELEVATION MAX.
FG	FINISHED GRADE
F.V.	FIELD VERIFY
HORIZ	HORIZONTAL
JT	JOINT
MAX	MAXIMUM
MIN.	MINIMUM
M.0.	MASONRY OPENING
NTS.	NOT TO SCALE
O.C., O/C	ON CENTER
PROJ	PROJECTION
P.T.	PRESERVATIVE TREATED
SIM	SIMILAR
SOG	SLAB ON GRADE
SS	STAINLESS STEEL
STD	STANDARD
T&B	TOP & BOTTOM
TOS	TOP OF SLAB
TOF	TOP OF FOUNDATION
TOW	TOP OF WALL
TYP.	TYPICAL
U.0.N	UNLESS OTHERWISE NOTED
VERT	VERTICAL
W.P.	WORK POINT

No.	Revisions	Date	By

Kimley»Horn
© 2025 KIMLEY-HORN AND ASSOCIATES, INC.
200 CENTRAL AVENUE, SUITE 600
ST. PETERSBURG, FL 33701
P: 727 547 3999
WWW.KIMLEY-HORN.COM REGISTRY NO. 35106

DESIGN ENGINEER: SETH E. SCHMID, P.E.
FL LICENSE NUMBER 54840
DATE:

SCALE: AS NOTED
DESIGN: SES
DRAWN: BTA
CHECKED:

STRUCTURAL GENERAL NOTES

CITY OF ST. PETE BEACH
PUMP & LIFT STATION REHABILITATIONS
PID# PS26-401-608-00
PINELLAS COUNTY FLORIDA

DATE: NOVEMBER 2025
PROJECT NO. 148404108
SHEET NUMBER S-0.2

K:\STP_Civil\148404 - City of St. Pete Beach\108 - Lift Station Rehabilitation (LS 4, 5, 7, 9, 10, 11, 12, 13, 14, 15, 16 and SW LS 35)\C-ADD\Revit\LS 4, 7, 10\Structural\148404108 - LS Rehab Structural.rvt

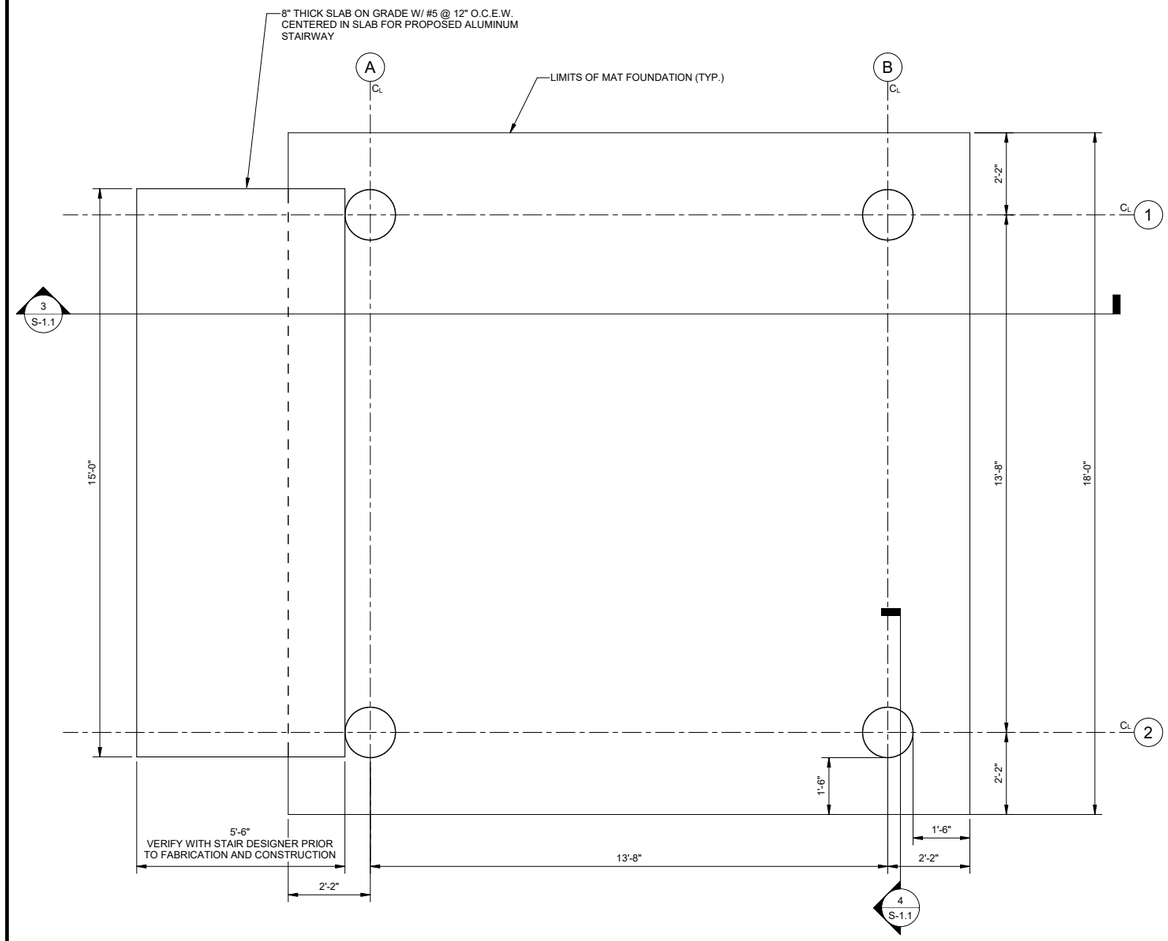

1 / S-1.0 ELEVATED GENERATOR PLATFORM - FOUNDATION PLAN

SCALE: 1/2" = 1'-0"

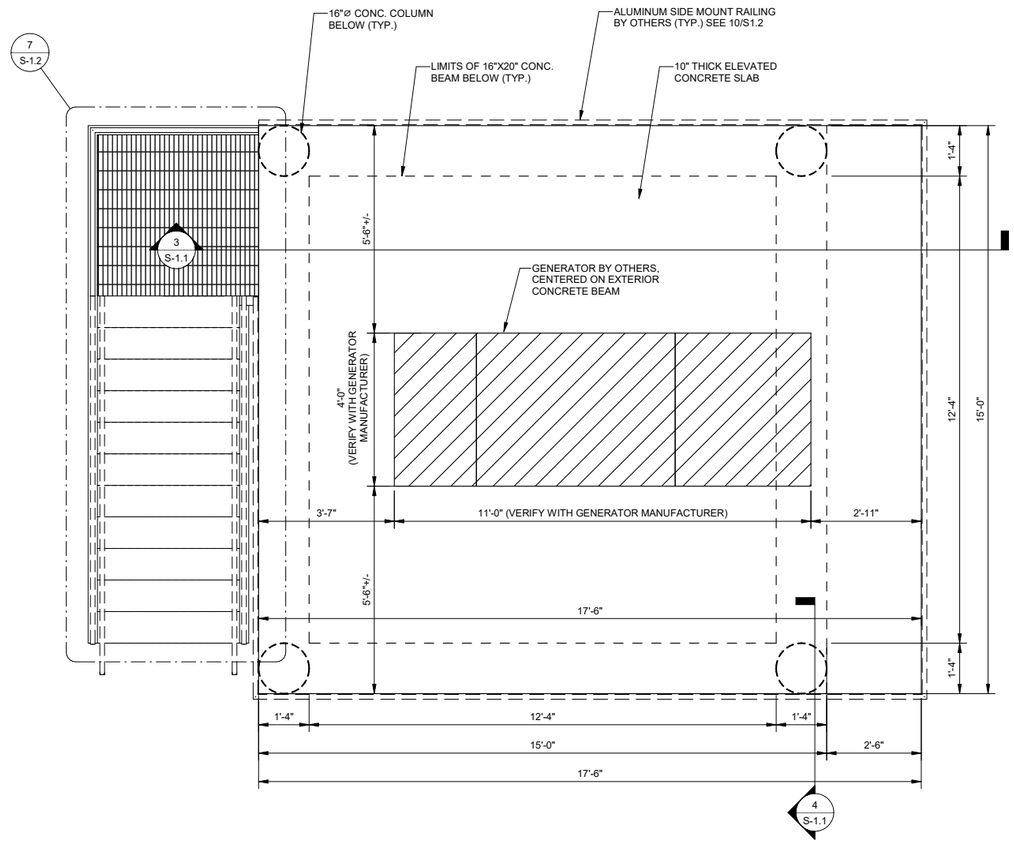

2 / S-1.0 ELEVATED GENERATOR PLATFORM - TOP SLAB PLAN

SCALE: 1/2" = 1'-0"

No.	Revisions	Date	By

Kimley»Horn
© 2025 KIMLEY-HORN AND ASSOCIATES, INC.
200 CENTRAL AVENUE, SUITE 600
ST. PETERSBURG, FL 33701
P. 727 547 3999
WWW.KIMLEY-HORN.COM REGISTRY NO. 35106

DESIGN ENGINEER:
SETH E. SCHMID, P.E.
FL LICENSE NUMBER
54640
DATE:

SCALE: AS NOTED
DESIGN: SES
DRAWN: BTA
CHECKED:

ELEVATED GENERATOR PLATFORM DETAILS

CITY OF ST. PETE BEACH
PUMP & LIFT STATION
REHABILITATIONS
PID# PS26-401-608-00
FLORIDA
PINELLAS COUNTY

DATE:
NOVEMBER 2025

PROJECT NO.
148404108

SHEET NUMBER
S-1.0

K:\STP_Civil\148404 - City of St. Pete Beach\108 - Lift Station Rehabilitation (LS 4, 5, 7, 9, 10, 11, 12, 13, 14, 15, 16 and SW LS 35)\CADD\Revit\LS 4, 7, 10\Structural\148404108 - LS Rehab Structural.rvt

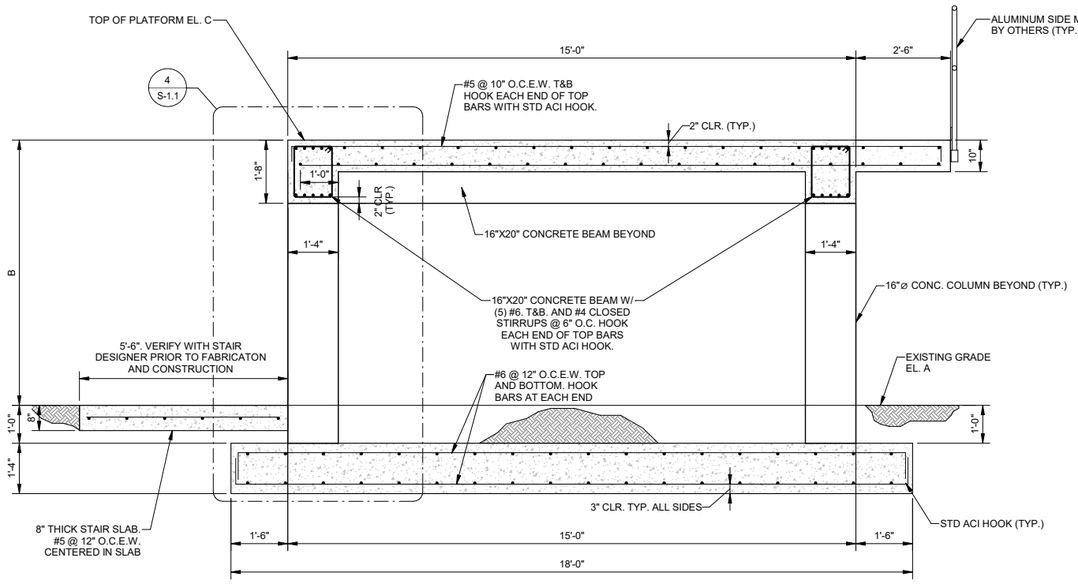

3 S-1.1 ELEVATED GENERATOR PLATFORM - TYPICAL SECTION

SCALE: 1/2" = 1'-0"

NOTES: 1. REFER TO LIFT STATION ELEVATION TABLE ON THIS SHEET FOR ELEVATIONS AND PLATFORM HEIGHT.
2. STAIRS NOT SHOWN FOR CLARITY

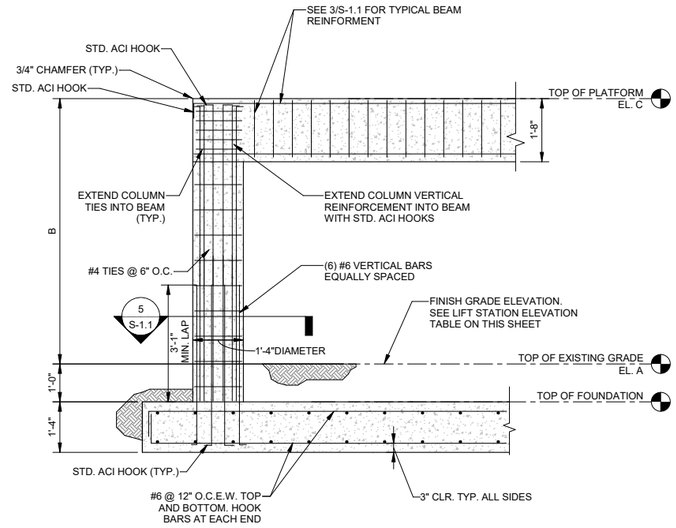

4 S-1.1 TYPICAL COLUMN REINFORCEMENT

SCALE: 1/2" = 1'-0"

NOTES: 1. REFER TO LIFT STATION ELEVATION TABLE ON THIS SHEET FOR ELEVATIONS AND PLATFORM HEIGHT.
2. RAILING NOT SHOWN FOR CLARITY

LIFT STATION	BASE FLOOD ELEVATION (ft)*	"A" APPROX. EX. GRADE ELEVATION (ft)	"B" APRROX. PLATFORM HEIGHT (ft)	"C" PLATFORM ELEVATION (ft)
10	11	4.85	6.15	11
4	9	2.95	6.05	9
*FEMA Flood Zone AE Map Numbers (Effective 8/24/2021): LS 10 - 12103C0257H LS 4 - 12103C0278H				

LIFT STATION ELEVATION TABLE

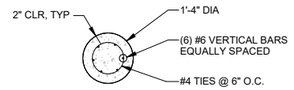

5 S-1.1 COLUMN SECTION

SCALE: 1/2" = 1'-0"

C:\Users\Josh.Solderrigo\Documents\148404108 - LS Rehab Structural_Josh.Solderrigo.rvt

No.	Revisions	Date	By

Kimley»Horn
© 2025 KIMLEY-HORN AND ASSOCIATES, INC.
200 CENTRAL AVENUE, SUITE 600
ST. PETERSBURG, FL 33701
P: 727 547 3999
WWW.KIMLEY-HORN.COM REGISTRY NO. 35106

DESIGN ENGINEER: SETH E. SCHMID, P.E.
FL LICENSE NUMBER 54640
DATE:

SCALE: AS NOTED
DESIGN: SES
DRAWN: BTA
CHECKED:

ELEVATED GENERATOR
PLATFORM DETAILS

CITY OF ST. PETE BEACH
PUMP & LIFT STATION
REHABILITATIONS
PID# PS26-401-608-00
PINELLAS COUNTY FLORIDA

DATE:
NOVEMBER 2025

PROJECT NO.
148404108

SHEET NUMBER
S-1.1

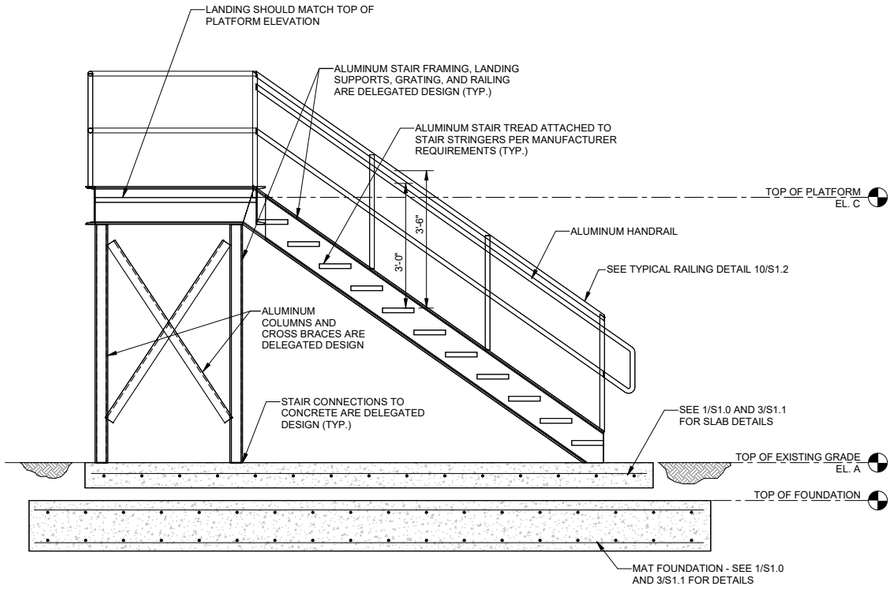

6 S-1.2 ALUMINUM STAIR ELEVATION & FOUNDATIONS

SCALE: 1/2" = 1'-0"

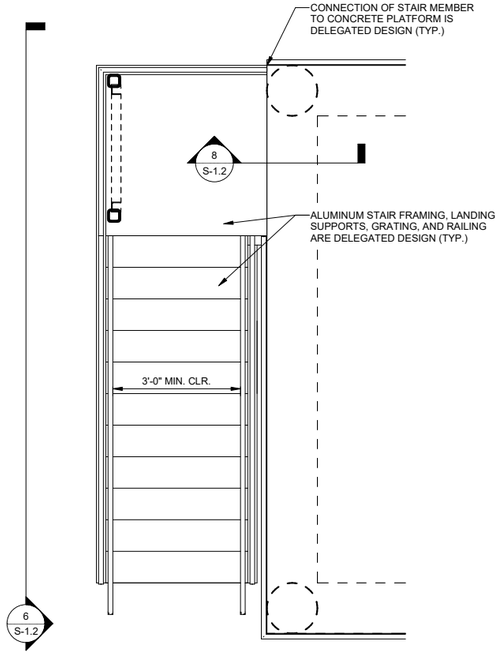

7 S-1.2 ALUMINUM STAIR FRAMING PLAN

SCALE: 1/2" = 1'-0"

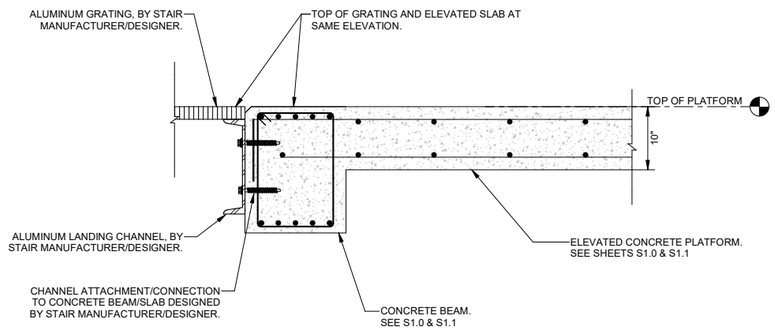

8 S-1.2 STAIR LANDING CONNECTION TO PLATFORM

SCALE: 1" = 1'-0"

NOTE: 1. DESIGN STAIRS, LANDING, RAILING AND HANDRAILS IN ACCORDANCE WITH THE CURRENT EDITION OF THE FLORIDA BUILDING CODE.
2. REFER TO LIFT STATION ELEVATION TABLE ON SHEET S1.1 FOR ELEVATIONS AND PLATFORM HEIGHT.
3. STAIR MANUFACTURER TO FIELD VERIFY EXISTING GRADE ELEVATION PRIOR TO FABRICATION AND CONSTRUCTION.

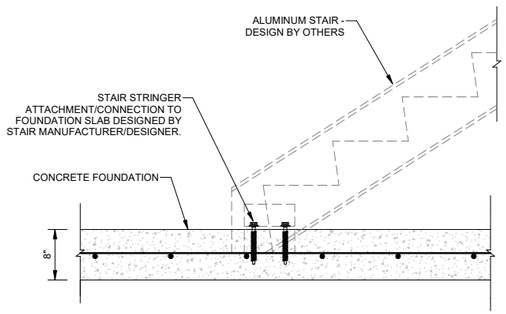

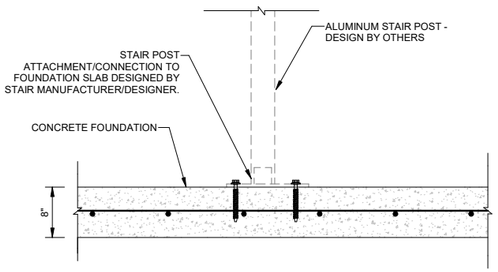

9 S-1.2 STAIR STRINGER CONNECTION AND POST CONNECTION TO FOUNDATION

SCALE: 1" = 1'-0"

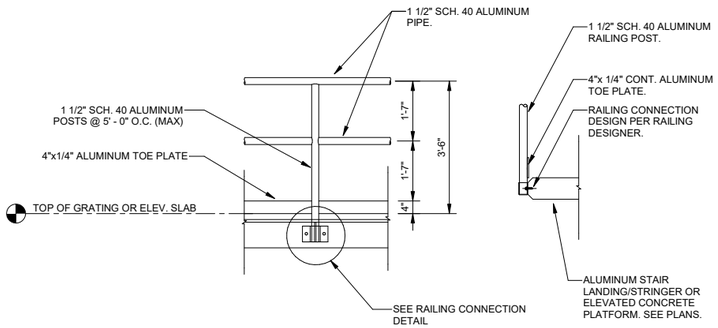

DESIGN SPECIFICATIONS FOR FACTORY-INDUSTRIAL RAILING APPLICATIONS

1. RAILING SHALL BE DESIGNED IN ACCORDANCE WITH THE CURRENT EDITION OF THE FLORIDA BUILDING CODE.
2. THE MANUFACTURER SHALL SUBMIT CALCULATIONS SIGNED AND SEALED BY A FLORIDA REGISTERED PROFESSIONAL ENGINEER FOR REVIEW.
3. POST SPACING SHALL BE A MAXIMUM OF 5' - 0". POSTS AND RAILINGS SHALL BE A MINIMUM OF 1 1/2" SCH. 40 ALUMINUM PIPE, ALLOY 6063-T6, ASTM-B-429 OR ASTM-B-221. THE RAILING MANUFACTURER SHALL SHOW THAT THEIR POSTS ARE OF ADEQUATE STRENGTH TO MEET THE LOADING REQUIREMENTS. IF THE MANUFACTURER'S POSTS ARE NOT OF ADEQUATE STRENGTH, THE MANUFACTURER MAY REDUCE POST SPACING, OR ADD REINFORCING DOWEL, OR DO BOTH TO MEET LOADING REQUIREMENTS.
4. POSTS SHALL NOT INTERRUPT CONTINUATION OF THE TOP RAIL AT ANY POINT ALONG THE RAILING, INCLUDING CORNERS AND END TERMINATIONS (OSHA 191023). THE TOP SURFACE OF THE TOP RAILING SHALL BE SMOOTH AND UNINTERRUPTED BY PROJECTING FITTINGS.
5. THE MIDRAIL AT A CORNER RETURN SHALL BE ABLE TO WITHSTAND A 200 LB. LOAD WITHOUT LOOSENING. THE MANUFACTURER IS TO DETERMINE THIS DIMENSIONS FOR THEIR SYSTEM.
6. TOE PLATE SHALL CONFORM TO OSHA STANDARDS. TOE PLATE SHALL BE A MINIMUM OF 4" HIGH AND SHALL BE AN EXTRUSION THAT ATTACHES TO THE POSTS TO ALLOW FOR EXPANSION AND CONTRACTION BETWEEN POSTS. TOE PLATES SHALL BE SET 1/4" ABOVE THE WALKING SURFACE. TOE PLATES SHALL BE PROVIDED ON RAILINGS AS REQUIRED BY OSHA AND/OR AS SHOWN ON DRAWINGS.
7. FIELD WELDING OF THE ALUMINUM RAILING IS NOT ALLOWED.

10 S-1.2 TYPICAL RAILING DETAIL

SCALE: 1/2" = 1'-0"

No.	Revisions	Date	By

Kimley»Horn
© 2025 KIMLEY-HORN AND ASSOCIATES, INC.
200 CENTRAL AVENUE, SUITE 600
ST. PETERSBURG, FL 33701
P. 727 547 3999
WWW.KIMLEY-HORN.COM REGISTRY NO. 35106

DESIGN ENGINEER: SETH E. SCHMID, P.E.
FL LICENSE NUMBER 54840
DATE:

SCALE: AS NOTED
DESIGN: SES
DRAWN: BTA
CHECKED:

STRUCTURAL - STAIR DETAILS

CITY OF ST. PETE BEACH
PUMP & LIFT STATION
REHABILITATIONS
PID# PS26-401-608-00
PINELLAS COUNTY FLORIDA

DATE:
NOVEMBER 2025

PROJECT NO.
148404108

SHEET NUMBER
S-1.2

K:\STP_Civil\148404 - City of St. Pete Beach\108 - Lift Station Rehabilitation (LS 4, 5, 7, 9, 10, 11, 12, 13, 14, 15, 16 and SW LS 35)\CADD\Revit\LS 4, 7, 10\Structural\148404108 - LS Rehab Structural.rvt

ELECTRICAL SYMBOLS

- LT — LEVEL TRANSMITTER
- (M) — ELECTRIC METER
- DISCONNECT SWITCH
- FUSED DISCONNECT SWITCH
- CIRCUIT BREAKER
- OVERLOAD RELAY
- (#) — MOTOR (NUMBER INDICATES HP)
- FLOAT SWITCH
- POLE–MOUNTED LIGHT FIXTURE
- $ — SINGLE POLE, SINGLE THROW SWITCH
- 3 POSITION SELECTOR SWITCH (X INDICATES CLOSED POSITION)
- NORMALLY OPEN PUSH BUTTON
- NORMALLY OPEN CONTACT
- NORMALLY CLOSED CONTACT
- M — MOTOR STARTER COIL
- CR — CONTROL RELAY
- MOTOR THERMAL SWITCH
- LIMIT SWITCH
- FLOAT SWITCH
- CURRENT TRANSFORMER
- FUSE
- SELECTOR SWITCH
- (G) — PILOT LIGHT LENS
  COLOR IS INDICATED BY LETTER INSIDE
  - A – AMBER
  - B – BLUE
  - G – GREEN
  - R – RED
  - W – WHITE
- (B) — PUSHBUTTON
  COLOR IS INDICATED BY LETTER INSIDE
  - B – BLUE
  - G – GREEN
  - R – RED
  - BLANK – BLACK
- ENGRAVED NAMEPLATE
- CONTROL PANEL TERMINAL
- SCADA PANEL TERMINAL
- GROUND
- WIRING IN CONDUIT (PLAN) / CONTROL PANEL WIRING
- HOME RUN TO PANEL (PLAN)
- FIELD WIRING (CONTROL PANEL)
- — G — GROUND RING
- GROUND TEST WELL

ELECTRICAL ABBREVIATIONS

A	AMPERE
AFF	ABOVE FINISHED FLOOR
AG	ABOVE GROUND
AL	ALUMINUM
ATL	ACROSS THE LINE STARTER
ATS	AUTOMATIC TRANSFER SWITCH
AWG	AMERICAN WIRE GAUGE
BRK	BREAKER
CAT	CATALOG
CR	CONTROL RELAY
CIRC.	MIL CIRCULAR MILS (AWG)
C.O.	CONDUIT ONLY
CKT	CIRCUIT
CP	CONTROL PANEL
DF	DEMAND FACTOR
DIA	DIAMETER
DS	DOOR SWITCH
DWG	DRAWING
EA	EACH
ELECT	ELECTRICAL
ELEV	ELEVATION
ETM	ELAPSED TIME METER
EXIST	EXISTING
FLA	FULL LOAD AMPS
FUT	FUTURE
FVNR	FULL VOLTAGE, NON–REVERSING
GFCI	GROUND FAULT CIRCUIT INTERRUPTER
GND	GROUND
HP	HORSE POWER
HZ	HERTZ (CYCLES PER SECOND)
IC	INTERRUPTING CAPACITY
ID	INTERNAL DIAMETER
KV	KILOVOLTS
KVA	KILOVOLT–AMPERES
LCL	LONG CONTINUOUS LOAD
LED	LIGHT EMITTING DIODE
LTG	LIGHTING
LS	LEVEL SWITCH
MAX	MAXIMUM
MCC	MOTOR CONTROL CENTER
MCP	MAIN CONTROL PANEL
MCM	THOUSAND CIRCULAR MIL (AWG)
MFR	MANUFACTURER
MIN	MINIMUM
MIS	MISCELLANEOUS
MOV	MOTOR OPERATED VALVE
MPZ	MINI POWER ZONE
MTG	MOUNTING
MTS	MANUAL TRANSFER SWITCH
N.C.	NORMALLY CLOSED
NEC	NATIONAL ELECTRICAL CODE
N.O.	NORMALLY OPEN
NO.	NUMBER
O.L.	OVERLOAD
P	POLE
PH	PHASE
PLC	PROGRAMMABLE LOGIC CONTROLLER
PNL	PANEL
PQM	POWER QUALITY METER
PR	PAIR
PVC	POLYVINYL CHLORIDE
REC	RECEPTACLE
RGS	RIGID GALVANIZED STEEL
RTU	REMOTE TERMINAL UNIT
RVSS	REDUCED VOLTAGE SOFT STARTER
SCE	SOUTHERN CALIFORNIA EDISON
SCHED	SCHEDULE
SES	SERVICE ENTRANCE SECTION
SF	SEAL FAIL
SHLD	SHIELDED
SPD	SURGE PROTECTION DEVICE
SPECS	SPECIFICATIONS
SS	SOFT STARTER
SSS	SOLID STATE STARTER
TEL	TELEPHONE
TDR	TIME DELAY RELAY
TRX	TRANSITION
TSH	TEMPERATURE SWITCH
TSP	TWISTED SHIELDED PAIR
TTB	TELEPHONE TERMINAL BACKBOARD
TYP	TYPICAL
UPS	UNINTERRUPTIBLE POWER SUPPLY
US	ULTRASONIC SENSOR
UG	UNDER GROUND
UCP	UNIT CONTROL PANEL
V	VOLTS
VFD	VARIABLE FREQUENCY DRIVE
WP	WEATHERPROOF
XFMR	TRANSFORMER

GENERAL ELECTRICAL NOTES

1. THE COMPLETED INSTALLATION SHALL CONFORM TO ALL APPLICABLE FEDERAL, STATE AND LOCAL CODE ORDINANCES AND REGULATIONS. CONTRACTOR SHALL OBTAIN NECESSARY PERMITS AND INSPECTIONS REQUIRED BY THE AUTHORITIES HAVING JURISDICTION. ALL WORK SHALL BE DONE IN A NEAT, WORKMANLIKE, FINISHED AND SAFE MANNER, ACCORDING TO THE LATEST PUBLISHED N.E.C.A. STANDARDS OF INSTALLATION, UNDER COMPETENT SUPERVISION. INSTALL GROUNDING AS REQUIRED BY THE CODE(S).
2. VISIT THE SITE PRIOR TO BIDDING TO BECOME FAMILIAR WITH EXISTING CONDITIONS AND ALL OTHER FACTORS WHICH MAY AFFECT THE EXECUTION OF THIS WORK. INCLUDE ALL RELATED COSTS IN THE INITIAL BID PROPOSAL.
3. ALL MATERIALS SHALL BE NEW AND OF THE BEST QUALITY, MANUFACTURED IN ACCORDANCE WITH NEMA, ANSI, U.L. OR OTHER APPLICABLE STANDARDS. THE USE OF MANUFACTURER'S NAMES, MODELS, AND NUMBERS IS INTENDED TO ESTABLISH STYLE, QUALITY, APPEARANCE, USEFULNESS AND BID PRICE. PROPOSED SUBSTITUTIONS SHALL BE SUBMITTED IN WRITING AND REVIEWED BY THE ENGINEER BEFORE ORDERING.
4. PROTECT ALL ELECTRICAL MATERIAL AND EQUIPMENT INSTALLED AGAINST DAMAGE BY OTHER TRADES, WEATHER CONDITIONS OR ANY OTHER CAUSES. EQUIPMENT FOUND DAMAGED OR IN OTHER THAN NEW CONDITION WILL BE REJECTED AS DEFECTIVE.
5. LEAVE THE SITE CLEAN, REMOVE ALL DEBRIS, EMPTY CARTONS, TOOLS, CONDUIT, WIRE SCRAPS AND ALL MISCELLANEOUS SPARE EQUIPMENT AND MATERIALS USED IN THE WORK DURING CONSTRUCTION. ALL COMPONENTS SHALL BE FREE OF DUST, GRIT AND FOREIGN MATERIALS, LEFT AS NEW BEFORE FINAL ACCEPTANCE OF WORK.
6. ALL NEW EQUIPMENT AND WIRING IS SHOWN FULL TONE. EXISTING EQUIPMENT IS SHOWN IN HALF TONE.
7. CONTRACTOR SHALL FURNISH AND INSTALL A SEPARATE INSULATED GROUND CONDUCTOR IN ALL CONDUITS. ALL GROUND CONDUCTORS SHALL BE #12 AWG UNLESS NOTED OTHERWISE ON THE DRAWINGS.
8. CONTRACTOR SHALL COORDINATE THE EXACT LOCATION OF ALL UNDERGROUND CONDUITS AND DUCT BANKS TO AVOID INTERFERENCES WITH UNDERGROUND PIPING AND UTILITIES.
9. ALL CONDUIT, HANDHOLES, MANHOLES AND OTHER COMPONENTS IN THE BURIED ELECTRICAL SYSTEM SHALL BE LISTED FOR DIRECT BURIAL.
10. ALL CONDUIT PENETRATIONS THROUGH CONCRETE STRUCTURES SHALL BE INSTALLED THROUGH SLEEVED PENETRATIONS WITH MODULAR SEALS.
11. CONTRACTOR SHALL PROVIDE AND INSTALL 1250LB PULL TAPE IN ALL EMPTY CONDUITS.
12. ALL SAFETY SWITCHES AND OTHER DISTRIBUTION AND CONTROL ELECTRICAL EQUIPMENT SHALL BE U.L. LISTED AND RATED FOR HEAVY DUTY SERVICE.
13. ALL FASTENERS AND MOUNTING HARDWARE USED FOR THE INSTALLATION OF ELECTRICAL ITEMS SHALL BE 316 STAINLESS STEEL.
14. ALL ELECTRICAL EQUIPMENT, CONDUIT, WIRING, BOXES, ETC. SHALL BE SUBMITTED TO THE ENGINEER FOR REVIEW PRIOR TO ORDERING. THE SUBMITTALS SHALL BE NEATLY GROUPED AND ORGANIZED. PERTINENT INFORMATION SHALL BE HIGHLIGHTED, AND THE SPECIFIC PRODUCT SHALL BE IDENTIFIED. ALL SUBMITTALS SHALL BE COMPLETE, AND PRESENTED IN ONE PACKAGE. THE SUBMITTAL SHALL INCLUDE A COMPLETE LIST OF THE EQUIPMENT AND MATERIALS, INCLUDING THE MANUFACTURER'S NAME, PRODUCT SPECIFICATION, DESCRIPTIVE DATA, TECHNICAL LITERATURE, PERFORMANCE CHARTS, CATALOG CUTS, INSTALLATION INSTRUCTIONS, AND SPARE PART RECOMMENDATIONS FOR EACH DIFFERENT ITEM OF THE EQUIPMENT SPECIFIED.
15. IT IS THE RESPONSIBILITY OF THE CONTRACTOR TO ORGANIZE THEIR WORK, SO THAT A COMPLETE ELECTRICAL, INSTRUMENTATION, AND CONTROL SYSTEM FOR THE FACILITY WILL BE PROVIDED, AND WILL BE SUPPORTED BY ACCURATE SHOP AND RECORD DRAWINGS, AND O & M MANUALS.

No.	Revisions	Date	By

Kimley»Horn
© 2025 KIMLEY-HORN AND ASSOCIATES, INC.
200 CENTRAL AVENUE, SUITE 600
ST. PETERSBURG, FL 33701
P: 727 547 3999
WWW.KIMLEY-HORN.COM REGISTRY NO. 35106

DESIGN ENGINEER: JASON A. HOYT, P.E.
FL LICENSE NUMBER 101453
DATE:

SCALE: AS NOTED | DESIGN: JAH | DRAWN: EBW | CHECKED: JAH

ELECTRICAL LEGEND

CITY OF ST. PETE BEACH
PUMP & LIFT STATION REHABILITATIONS
PID# PS26-401-608-00
PINELLAS COUNY FLORIDA

DATE: DECEMBER 2025

PROJECT NO. 148404108

SHEET NUMBER E-01

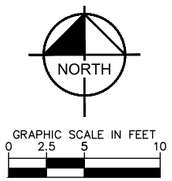

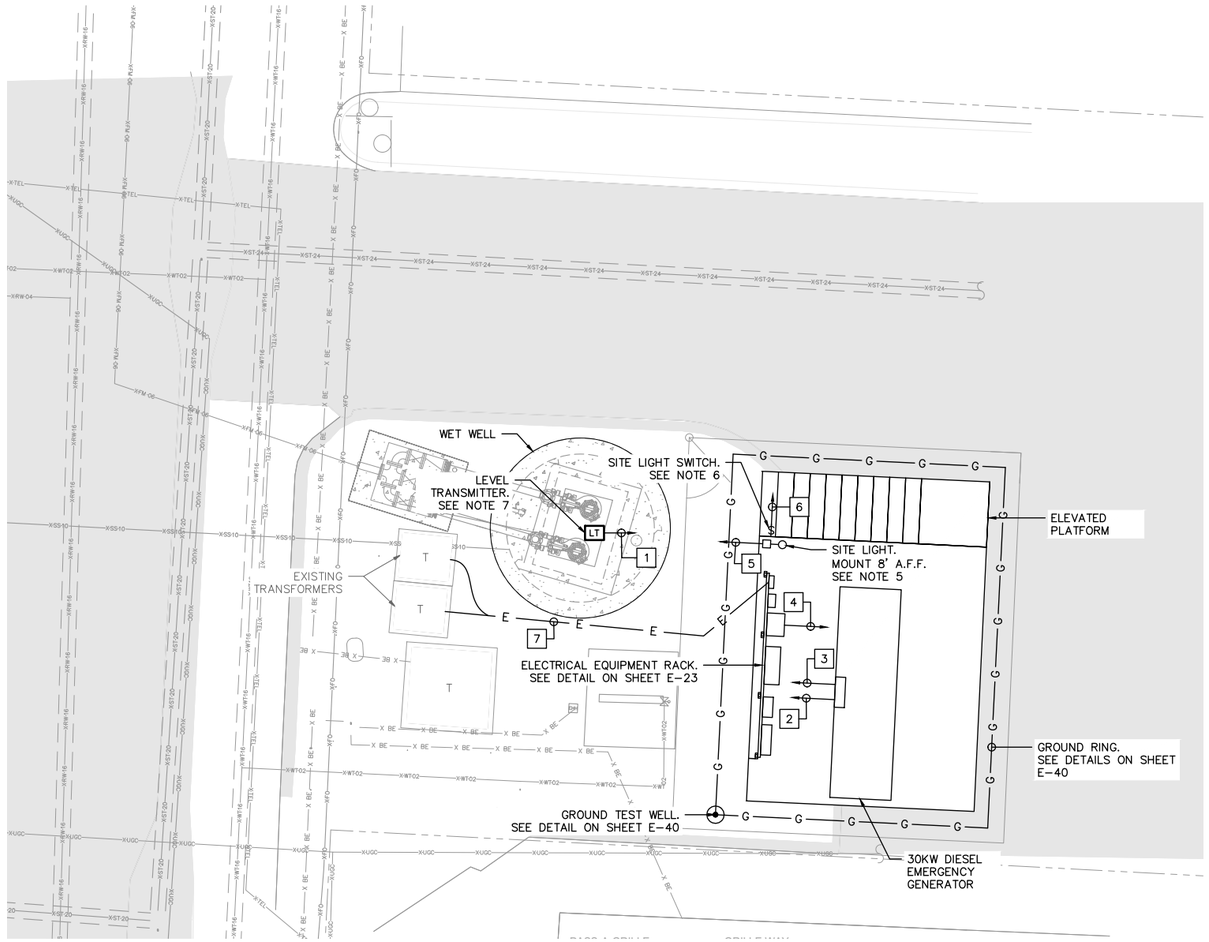

A ELECTRICAL SITE PLAN
SCALE: 1" = 5'

GENERAL NOTES:

1. COORDINATE RELOCATION OF ELECTRIC SERVICE WITH DUKE ENERGY.
2. REUSE EXISTING CONDUIT TO THE FULLEST EXTENT POSSIBLE.
3. CONDUITS SHOWN ARE REPRESENTATIVE ONLY. CONTRACTOR SHALL DETERMINE CONDUIT LOCATION AND ROUTING.
4. SEE ONE-LINE DIAGRAM ON SHEET E-03 FOR ADDITIONAL CONDUIT AND WIRING.
5. POLE-MOUNTED FIXTURE, LITHONIA #DSXF1 LED P2 40K WFL MVOLT IS DDBXD. CONTRACTOR TO FIELD ADJUST ORIENTATION AS REQUIRED.
6. WEATHERPROOF 20A-1P SITE LIGHT SWITCH. MOUNT TO THE ELEVATED PLATFORM COLUMN, 48" ABOVE THE STEP.
7. REPLACE EXISTING SUBMERSIBLE LEVEL TRANSMITTER WITH A RADAR LEVEL TRANSMITTER. SEE INSTALLATION DETAIL ON SHEET E-41.

KEY NOTES:

1. LEVEL TRANSMITTER CABLE IN EXISTING 1-1/4" CONDUIT TO SCADA PANEL ON ELECTRICAL EQUIPMENT RACK
2. 2#12 AND #12 GND. IN 3/4" CONDUIT TO PUMP CONTROL PANEL ON ELECTRICAL EQUIPMENT RACK
3. 8#14 IN AND (1) ETHERNET CABLE 1" CONDUIT TO SCADA PANEL ON ELECTRICAL EQUIPMENT RACK
4. 4#14 AND (1) ETHERNET CABLE IN 1" CONDUIT TO SCADA PANEL ON ELECTRICAL EQUIPMENT RACK
5. 2#12 AND #12 GND. IN 1" CONDUIT TO PUMP CONTROL PANEL ON ELECTRICAL EQUIPMENT RACK
6. 2#12 AND #12 GND. IN 1" CONDUIT TO SITE LIGHT
7. 4#1 IN 1-1/2" CONDUIT TO EXISTING PAD-MOUNTED TRANSFORMER

No.	Revisions	Date	By

Kimley»Horn
© 2025 KIMLEY-HORN AND ASSOCIATES, INC.
200 CENTRAL AVENUE, SUITE 600
ST. PETERSBURG, FL 33701
P: 727 547 3999
WWW.KIMLEY-HORN.COM REGISTRY NO. 35106

DESIGN ENGINEER: JASON A. HOYT, P.E.
FL LICENSE NUMBER 101453
DATE:

SCALE:	AS NOTED	DESIGN:	JAH	DRAWN:	EBW	CHECKED:	JAH

LIFT STATION 4 REHABILITATION
ELECTRICAL SITE PLAN

CITY OF ST. PETE BEACH
PUMP & LIFT STATION
REHABILITATIONS
PID# PS26-401-608-00
PINELLAS COUNY FLORIDA

DATE:
DECEMBER 2025

PROJECT NO.
148404108

SHEET NUMBER
E-02

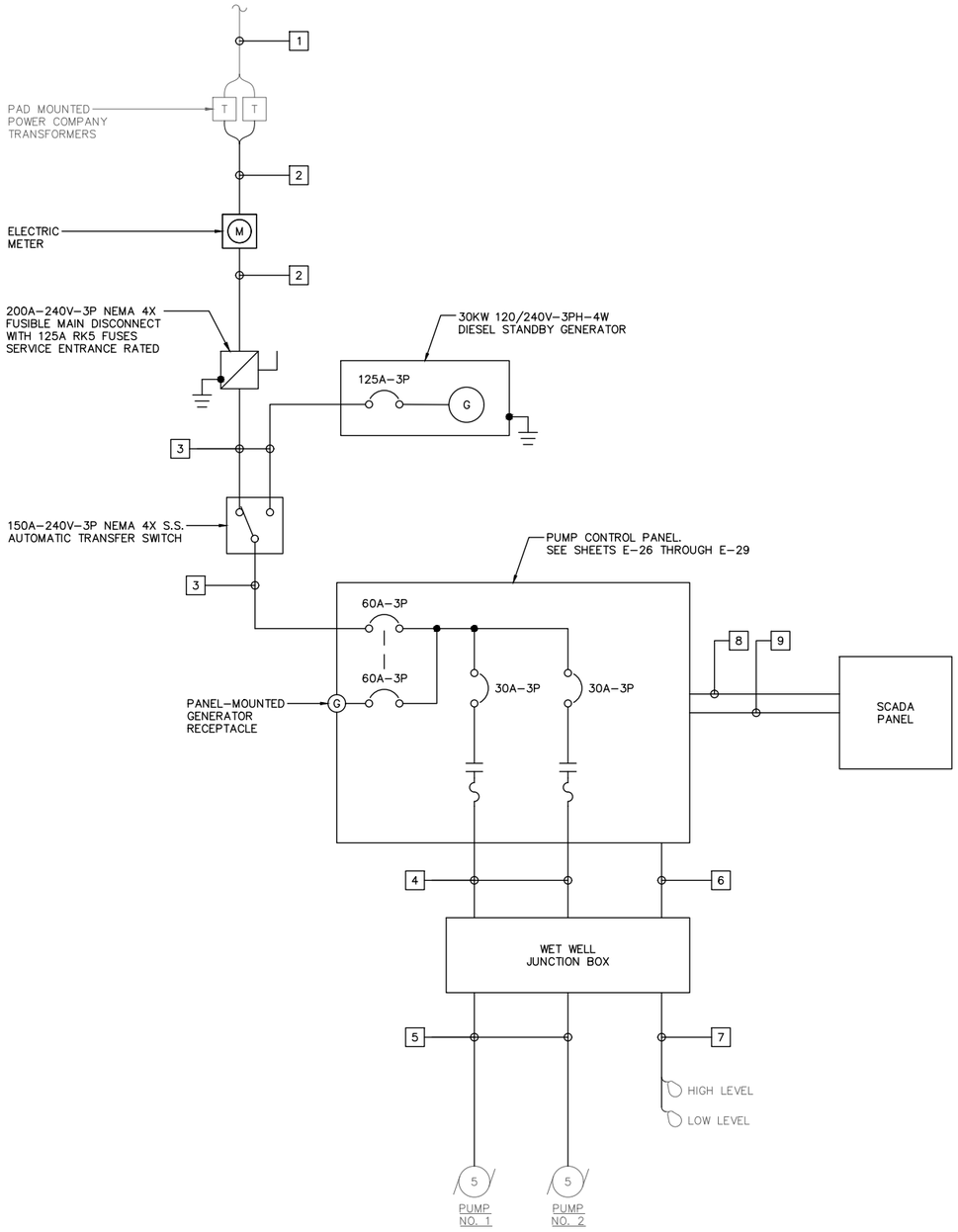

A ELECTRICAL ONE-LINE DIAGRAM

SCALE: NO SCALE

GENERAL NOTES:

1. COORDINATE RELOCATION OF ELECTRIC SERVICE WITH DUKE ENERGY.
2. REUSE EXISTING CONDUIT TO THE FULLEST EXTENT POSSIBLE.
3. CONDUITS SHOWN ARE REPRESENTATIVE ONLY. CONTRACTOR SHALL DETERMINE CONDUIT LOCATION AND ROUTING.
4. COORDINATE FLOAT LEVEL SWITCH ELEVATIONS WITH THE CITY.
5. EXISTING FLOATS NOT USED SHALL BE SECURED ABOVE THE HIGH LEVEL FLOAT FOR USE AS SPARES.

KEY NOTES:

1. PRIMARY UNDERGROUND ELECTRIC SERVICE
2. 4#1 IN 1–1/2" CONDUIT
3. 4#1 AND #6 GND. IN 2" CONDUIT
4. 3#10, 4#14, AND #10 GND. IN 2" CONDUIT
5. SUBMERSIBLE PUMP CABLES IN 2" CONDUIT
6. 8#14 IN 2" CONDUIT
7. FLOAT SWITCH CABLES IN 2" CONDUIT
8. 10#14 (120VAC) AND #14 GND. IN 3/4" CONDUIT
9. 26#14 (24VDC) AND (6) 1 PR. #16 SHLD. IN 2" CONDUIT

ELECTRICAL LOAD CALCULATION

LOAD DESCRIPTION	HP	CONN. LOAD (KVA)	DEMAND FACTOR (DF)	DEMAND LOAD (KVA)
SEWAGE PUMP NO. 1 (LARGEST MOTOR)	5	6.32	1.25	7.90
SEWAGE PUMP NO. 2	5	6.32	1.00	6.32
AUXILIARY EQUIPMENT		3.00	1.00	3.00
TOTAL:		15.64		17.22

ELECTRICAL LOAD SUMMARY

SERVICE VOLTAGE:	240	V
PHASE:	3	
CONNECTED LOAD:	15.64	KVA
	37.62	A
DEMAND LOAD:	17.22	KVA
	41.42	A
LOAD MULTIPLIER:	1.25	
MINIMUM SERVICE:	21.52	KVA
	51.77	A
SEVICE ENTRANCE TRIP RATING:	125	A
MINIMUM SHORT CIRCUIT CURRENT RATING:	22	KAIC

B ELECTRICAL LOAD CALCULATIONS

SCALE: NO SCALE

No.	Revisions	Date	By

Kimley»Horn

© 2025 KIMLEY-HORN AND ASSOCIATES, INC.

200 CENTRAL AVENUE, SUITE 600
ST. PETERSBURG, FL 33701
P: 727 547 3999
WWW.KIMLEY-HORN.COM REGISTRY NO. 35106

DESIGN ENGINEER:
JASON A. HOYT, P.E.
FL LICENSE NUMBER
101453
DATE:

SCALE: AS NOTED
DESIGN: JAH
DRAWN: EBW
CHECKED: JAH

LIFT STATION 4 REHABILITATION
ELECTRICAL ONE-LINE DIAGRAM

CITY OF ST. PETE BEACH
PUMP & LIFT STATION
REHABILITATIONS
PID# PS26-401-608-00
PINELLAS COUNY FLORIDA

DATE:
DECEMBER 2025

PROJECT NO.
148404108

SHEET NUMBER
E-03

NORTH

GRAPHIC SCALE IN FEET
0 2.5 5 10

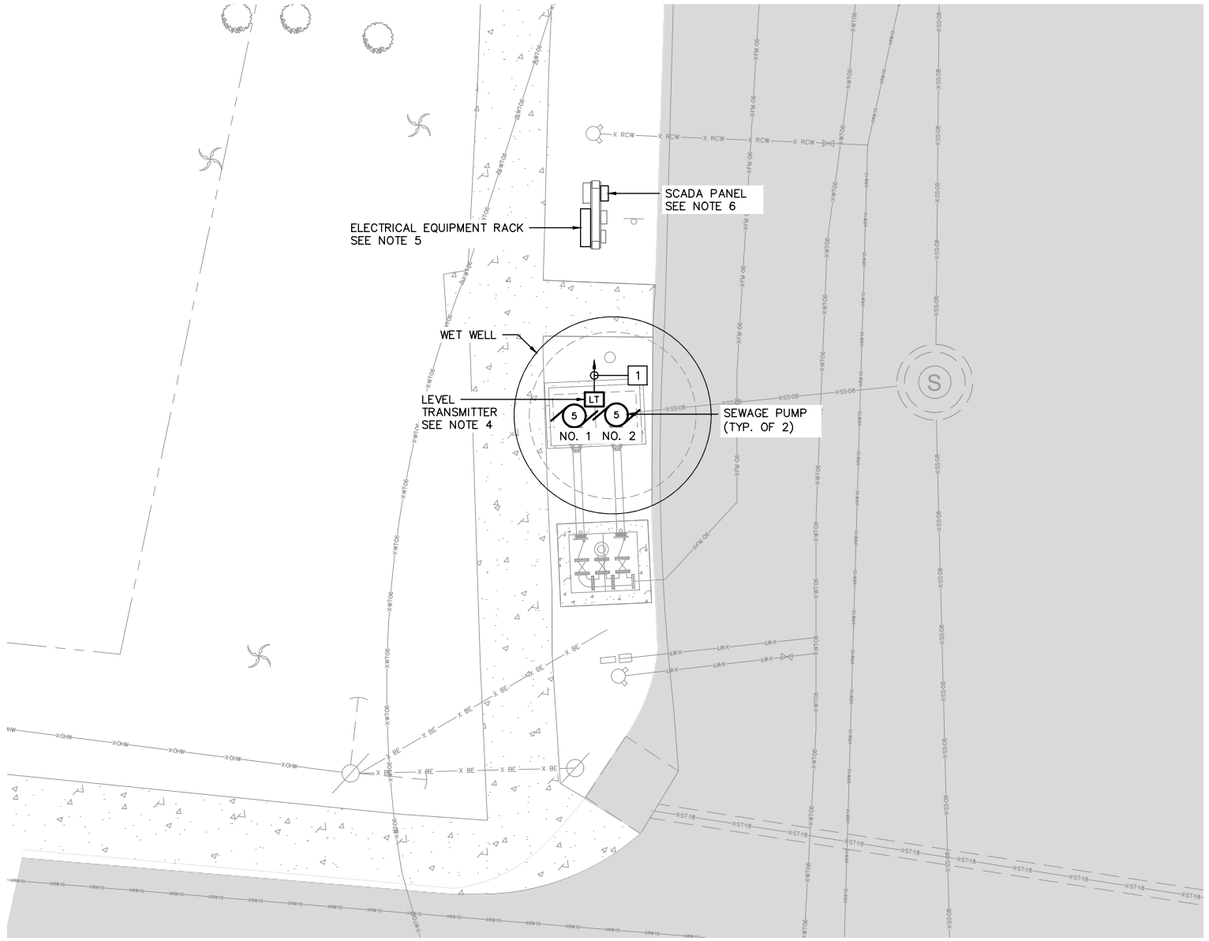

A ELECTRICAL SITE PLAN
SCALE: 1" = 5'

GENERAL NOTES:

1. REUSE EXISTING CONDUIT TO THE FULLEST EXTENT POSSIBLE.
2. CONDUITS SHOWN ARE REPRESENTATIVE ONLY. CONTRACTOR SHALL DETERMINE CONDUIT LOCATION AND ROUTING.
3. SEE ONE-LINE DIAGRAM ON SHEET E-05 FOR ADDITIONAL CONDUIT AND WIRING.
4. REPLACE EXISTING SUBMERSIBLE LEVEL TRANSMITTER WITH A RADAR LEVEL TRANSMITTER. SEE INSTALLATION DETAIL ON SHEET E-41.
5. REPLACE ATL PUMP CONTROL PANEL ON ELECTRICAL EQUIPMENT RACK. SEE EQUIPMENT RACK ELEVATION ON SHEET E-22 AND ATL PUMP CONTROL PANEL ON SHEETS E-26 THROUGH E-29.
6. CITY PROVIDED AND INSTALLED SCADA PANEL AND ANTENNA. COORDINATE REPLACEMENT WITH THE CITY.

KEY NOTES:

[1] LEVEL TRANSMITTER CABLE IN EXISTING 1-1/4" CONDUIT TO SCADA PANEL ON ELECTRICAL EQUIPMENT RACK.

No.	Revisions	Date	By

Kimley»Horn

© 2025 KIMLEY-HORN AND ASSOCIATES, INC.
200 CENTRAL AVENUE, SUITE 600
ST. PETERSBURG, FL 33701
P: 727 547 3999
WWW.KIMLEY-HORN.COM REGISTRY NO. 35106

DESIGN ENGINEER:
JASON A. HOYT, P.E.
FL LICENSE NUMBER
101453
DATE:

SCALE: AS NOTED
DESIGN: JAH
DRAWN: EBW
CHECKED: JAH

LIFT STATION 5 REHABILITATION
ELECTRICAL SITE PLAN

CITY OF ST. PETE BEACH
PUMP & LIFT STATION
REHABILITATIONS
PID# PS26-401-608-00
PINELLAS COUNY FLORIDA

DATE:
DECEMBER 2025

PROJECT NO.
148404108

SHEET NUMBER
E-04

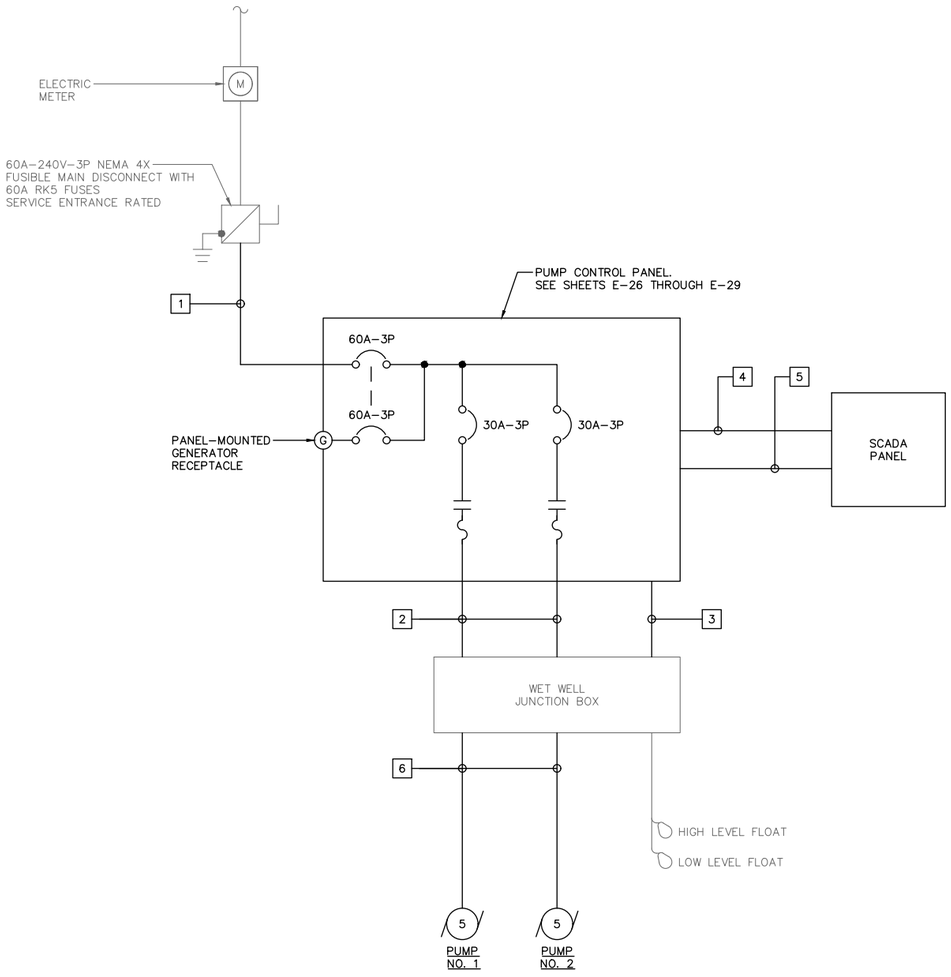

A ELECTRICAL ONE–LINE DIAGRAM

SCALE: NO SCALE

GENERAL NOTES:

1. REUSE EXISTING CONDUIT TO THE FULLEST EXTENT POSSIBLE.
2. CONDUITS SHOWN ARE REPRESENTATIVE ONLY. CONTRACTOR SHALL DETERMINE CONDUIT LOCATION AND ROUTING.
3. COORDINATE FLOAT LEVEL SWITCH ELEVATIONS WITH THE CITY.
4. EXISTING FLOATS NOT USED SHALL BE SECURED ABOVE THE HIGH LEVEL FLOAT FOR USE AS SPARES.

KEY NOTES:

1. 4#6 AND #10 GND. IN 1–1/4" CONDUIT
2. 3#10, 4#14, AND #10 GND. IN 2" CONDUIT
3. 8#14 IN 2" CONDUIT
4. 10#14 (120VAC) AND #14 GND. IN 2" CONDUIT
5. 36#14 (24VDC) AND (2) 1 PR. #16 SHLD. IN 2" CONDUIT
6. SUBMERSIBLE PUMP CABLES IN 2" CONDUIT

ELECTRICAL LOAD CALCULATION

LOAD DESCRIPTION	HP	CONN. LOAD (KVA)	DEMAND FACTOR (DF)	DEMAND LOAD (KVA)
SEWAGE PUMP NO. 1 (LARGEST MOTOR)	5	6.32	1.25	7.90
SEWAGE PUMP NO. 2	5	6.32	1.00	6.32
AUXILIARY EQUIPMENT		1.00	1.00	1.00
TOTAL:		13.64		15.22

ELECTRICAL LOAD SUMMARY

SERVICE VOLTAGE:	240	V
PHASE:	3	
CONNECTED LOAD:	13.64	KVA
	32.81	A
DEMAND LOAD:	15.22	KVA
	36.61	A
LOAD MULTIPLIER:	1.25	
MINIMUM SERVICE:	19.02	KVA
	45.76	A
SEVICE ENTRANCE TRIP RATING:	60	A
MINIMUM SHORT CIRCUIT CURRENT RATING:	22	KAIC

B ELECTRICAL LOAD CALCULATIONS

SCALE: NO SCALE

No.	Revisions	Date	By

Kimley»Horn
© 2025 KIMLEY-HORN AND ASSOCIATES, INC.
200 CENTRAL AVENUE, SUITE 600
ST. PETERSBURG, FL 33701
P: 727 547 3999
WWW.KIMLEY-HORN.COM REGISTRY NO. 35106

DESIGN ENGINEER: JASON A. HOYT, P.E.
FL LICENSE NUMBER 101453
DATE:

SCALE: AS NOTED
DESIGN: JAH
DRAWN: EBW
CHECKED: JAH

LIFT STATION 5 REHABILITATION
ELECTRICAL ONE-LINE DIAGRAM

CITY OF ST. PETE BEACH
PUMP & LIFT STATION REHABILITATIONS
PID# PS26-401-608-00
FLORIDA
PINELLAS COUNY

DATE: DECEMBER 2025

PROJECT NO. 148404108

SHEET NUMBER E-05

NORTH

GRAPHIC SCALE IN FEET
0 2.5 5 10

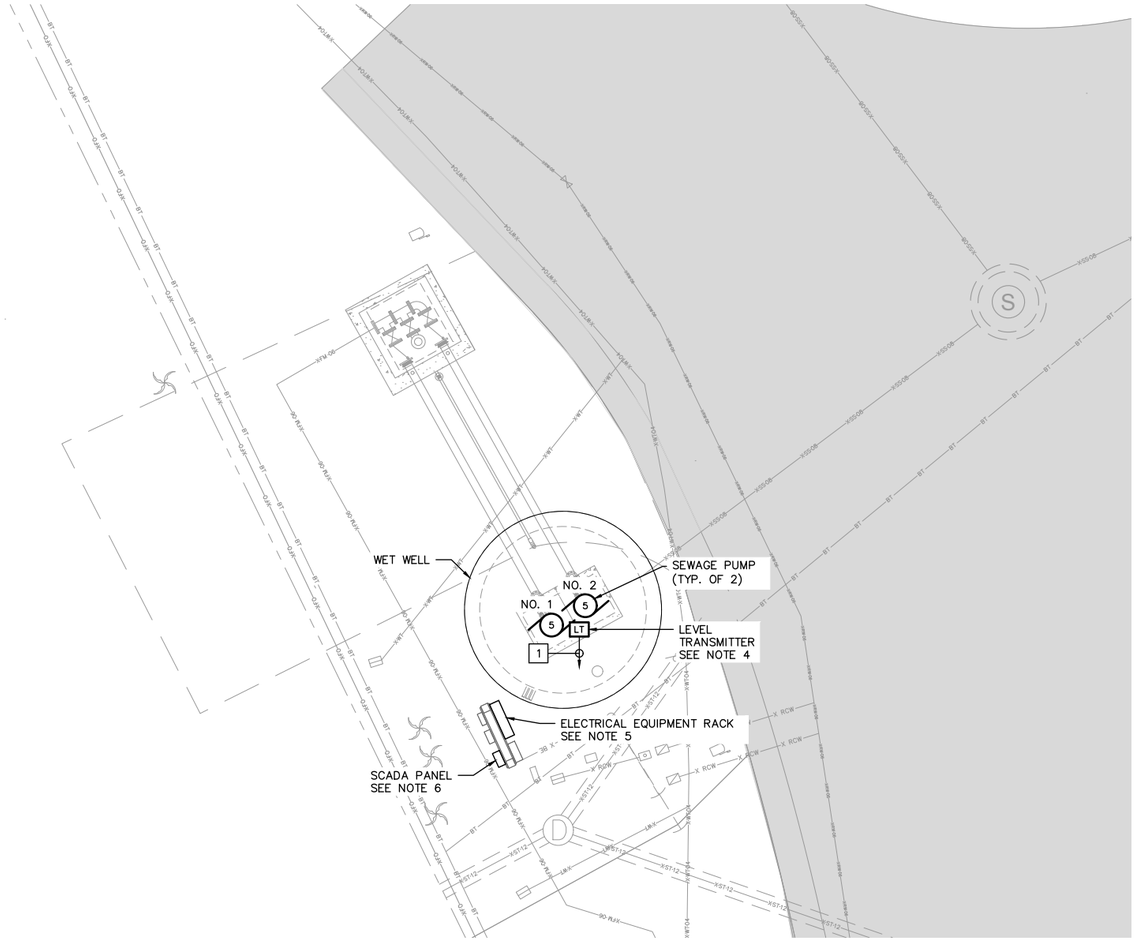

A ELECTRICAL SITE PLAN
SCALE: 1" = 5'

GENERAL NOTES:

1. REUSE EXISTING CONDUIT TO THE FULLEST EXTENT POSSIBLE.
2. CONDUITS SHOWN ARE REPRESENTATIVE ONLY. CONTRACTOR SHALL DETERMINE CONDUIT LOCATION AND ROUTING.
3. SEE ONE-LINE DIAGRAM ON SHEET E-07 FOR ADDITIONAL CONDUIT AND WIRING.
4. REPLACE EXISTING SUBMERSIBLE LEVEL TRANSMITTER WITH A RADAR LEVEL TRANSMITTER. SEE INSTALLATION DETAIL ON SHEET E-41.
5. REPLACE ATL PUMP CONTROL PANEL ON ELECTRICAL EQUIPMENT RACK. SEE EQUIPMENT RACK ELEVATION ON SHEET E-22 AND ATL PUMP CONTROL PANEL ON SHEETS E-26 THROUGH E-29.
6. CITY PROVIDED AND INSTALLED SCADA PANEL AND ANTENNA. COORDINATE REPLACEMENT WITH THE CITY.

KEY NOTES:

[1] LEVEL TRANSMITTER CABLE IN EXISTING 1-1/4" CONDUIT TO SCADA PANEL ON ELECTRICAL EQUIPMENT RACK.

No.	Revisions	Date	By

Kimley»Horn

© 2025 KIMLEY-HORN AND ASSOCIATES, INC.
200 CENTRAL AVENUE, SUITE 600
ST. PETERSBURG, FL 33701
P: 727 547 3999
WWW.KIMLEY-HORN.COM REGISTRY NO. 35106

DESIGN ENGINEER:
JASON A. HOYT, P.E.
FL LICENSE NUMBER
101453
DATE:

SCALE: AS NOTED
DESIGN: JAH
DRAWN: EBW
CHECKED: JAH

LIFT STATION 9 REHABILITATION
ELECTRICAL SITE PLAN

CITY OF ST. PETE BEACH
PUMP & LIFT STATION
REHABILITATIONS
PID# PS26-401-608-00
PINELLAS COUNY FLORIDA

DATE:
DECEMBER 2025

PROJECT NO.
148404108

SHEET NUMBER
E-06

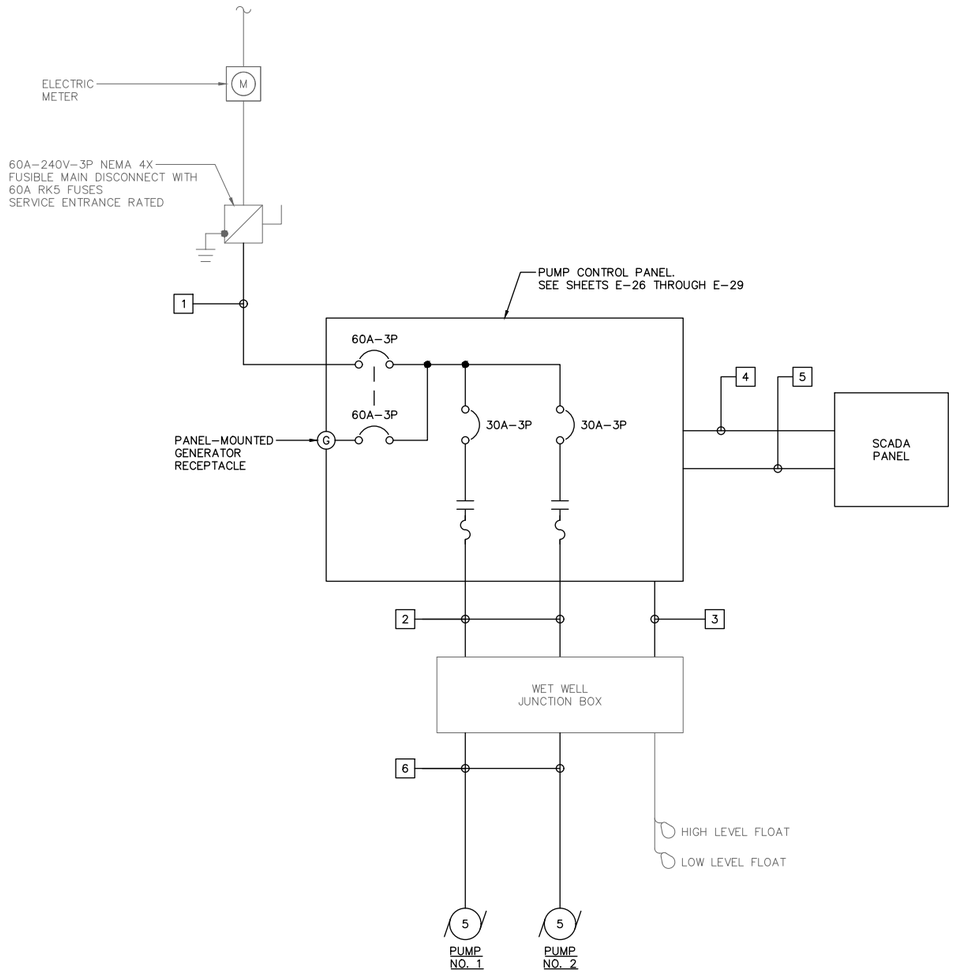

A ELECTRICAL ONE–LINE DIAGRAM

SCALE: NO SCALE

GENERAL NOTES:

1. REUSE EXISTING CONDUIT TO THE FULLEST EXTENT POSSIBLE.
2. CONDUITS SHOWN ARE REPRESENTATIVE ONLY. CONTRACTOR SHALL DETERMINE CONDUIT LOCATION AND ROUTING.
3. COORDINATE FLOAT LEVEL SWITCH ELEVATIONS WITH THE CITY.
4. EXISTING FLOATS NOT USED SHALL BE SECURED ABOVE THE HIGH LEVEL FLOAT FOR USE AS SPARES.

KEY NOTES:

1. 4#6 AND #10 GND. IN 1–1/4" CONDUIT
2. 3#10, 4#14, AND #10 GND. IN 2" CONDUIT
3. 8#14 IN 2" CONDUIT
4. 10#14 (120VAC) AND #14 GND. IN 2" CONDUIT
5. 36#14 (24VDC) AND (2) 1 PR. #16 SHLD. IN 2" CONDUIT
6. SUBMERSIBLE PUMP CABLES IN 2" CONDUIT

ELECTRICAL LOAD CALCULATION

LOAD DESCRIPTION	HP	CONN. LOAD (KVA)	DEMAND FACTOR (DF)	DEMAND LOAD (KVA)
SEWAGE PUMP NO. 1 (LARGEST MOTOR)	5	6.32	1.25	7.90
SEWAGE PUMP NO. 2	5	6.32	1.00	6.32
AUXILIARY EQUIPMENT		1.00	1.00	1.00
TOTAL:		13.64		15.22

ELECTRICAL LOAD SUMMARY

SERVICE VOLTAGE:	240	V
PHASE:	3	
CONNECTED LOAD:	13.64	KVA
	32.81	A
DEMAND LOAD:	15.22	KVA
	36.61	A
LOAD MULTIPLIER:	1.25	
MINIMUM SERVICE:	19.02	KVA
	45.76	A
SEVICE ENTRANCE TRIP RATING:	60	A
MINIMUM SHORT CIRCUIT CURRENT RATING:	22	KAIC

B ELECTRICAL LOAD CALCULATIONS

SCALE: NO SCALE

No.	Revisions	Date	By

Kimley»Horn
© 2025 KIMLEY-HORN AND ASSOCIATES, INC.
200 CENTRAL AVENUE, SUITE 600
ST. PETERSBURG, FL 33701
P: 727 547 3999
WWW.KIMLEY-HORN.COM REGISTRY NO. 35106

DESIGN ENGINEER: JASON A. HOYT, P.E.
FL LICENSE NUMBER 101453
DATE:

SCALE: AS NOTED
DESIGN: JAH
DRAWN: EBW
CHECKED: JAH

LIFT STATION 9 REHABILITATION
ELECTRICAL ONE-LINE DIAGRAM

CITY OF ST. PETE BEACH
PUMP & LIFT STATION REHABILITATIONS
PID# PS26-401-608-00
FLORIDA
PINELLAS COUNY

DATE: DECEMBER 2025

PROJECT NO. 148404108

SHEET NUMBER E-07

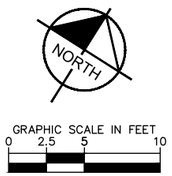

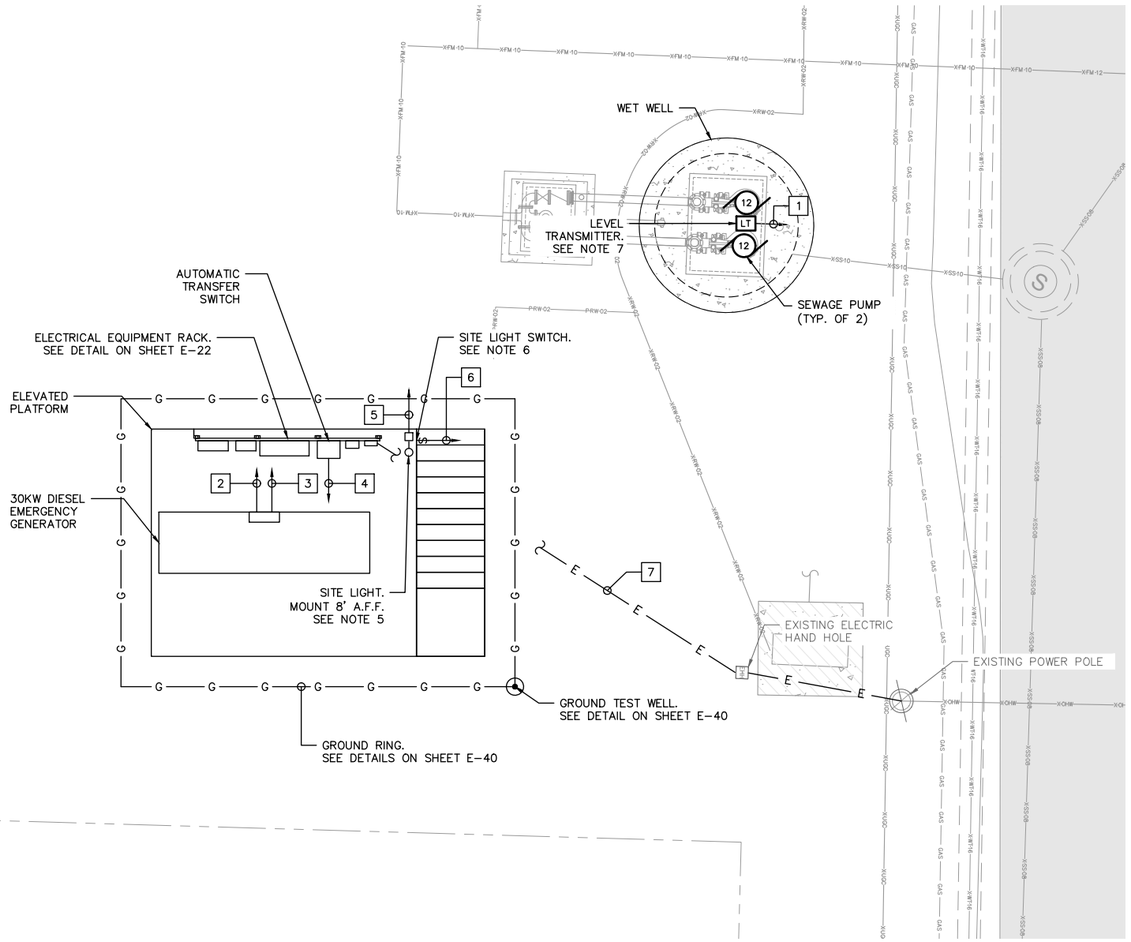

A ELECTRICAL SITE PLAN
SCALE: 1" = 5'

GENERAL NOTES:

1. COORDINATE RELOCATION OF ELECTRIC SERVICE WITH DUKE ENERGY.
2. REUSE EXISTING CONDUIT TO THE FULLEST EXTENT POSSIBLE.
3. CONDUITS SHOWN ARE REPRESENTATIVE ONLY. CONTRACTOR SHALL DETERMINE CONDUIT LOCATION AND ROUTING.
4. SEE ONE-LINE DIAGRAM ON SHEET E-03 FOR ADDITIONAL CONDUIT AND WIRING.
5. POLE-MOUNTED FIXTURE, LITHONIA #DSXF1 LED P2 40K WFL MVOLT IS DDBXD. CONTRACTOR TO FIELD ADJUST ORIENTATION AS REQUIRED.
6. WEATHERPROOF 20A-1P SITE LIGHT SWITCH. MOUNT TO THE ELEVATED PLATFORM COLUMN, 48" ABOVE THE STEP.
7. REPLACE EXISTING SUBMERSIBLE LEVEL TRANSMITTER WITH A RADAR LEVEL TRANSMITTER. SEE INSTALLATION DETAIL ON SHEET E-41.

KEY NOTES:

1. LEVEL TRANSMITTER CABLE IN EXISTING 1-1/4" CONDUIT TO SCADA PANEL ON ELECTRICAL EQUIPMENT RACK
2. 2#12 AND #12 GND. IN 3/4" CONDUIT TO PUMP CONTROL PANEL ON ELECTRICAL EQUIPMENT RACK
3. 8#14 IN AND (1) ETHERNET CABLE 1" CONDUIT TO SCADA PANEL ON ELECTRICAL EQUIPMENT RACK
4. 4#14 AND (1) ETHERNET CABLE IN 1" CONDUIT TO SCADA PANEL ON ELECTRICAL EQUIPMENT RACK
5. 2#12 AND #12 GND. IN 1" CONDUIT TO PUMP CONTROL PANEL ON ELECTRICAL EQUIPMENT RACK
6. 2#12 AND #12 GND. IN 1" CONDUIT TO SITE LIGHT
7. 4#1 IN 1-1/2" CONDUIT TO EXISTING POWER POLE RUN THROUGH EXISTING ELECTRICAL HAND HOLE

No.	Revisions	Date	By

Kimley»Horn
© 2025 KIMLEY-HORN AND ASSOCIATES, INC.
200 CENTRAL AVENUE, SUITE 600
ST. PETERSBURG, FL 33701
P: 727 547 3999
WWW.KIMLEY-HORN.COM REGISTRY NO. 35106

DESIGN ENGINEER:
JASON A. HOYT, P.E.
FL LICENSE NUMBER
101453
DATE:

SCALE: AS NOTED
DESIGN: JAH
DRAWN: EBW
CHECKED: JAH

LIFT STATION 10 REHABILITATION
ELECTRICAL SITE PLAN

CITY OF ST. PETE BEACH
PUMP & LIFT STATION
REHABILITATIONS
PID# PS26-401-608-00
PINELLAS COUNY FLORIDA

DATE:
DECEMBER 2025

PROJECT NO.
148404108

SHEET NUMBER
E-08

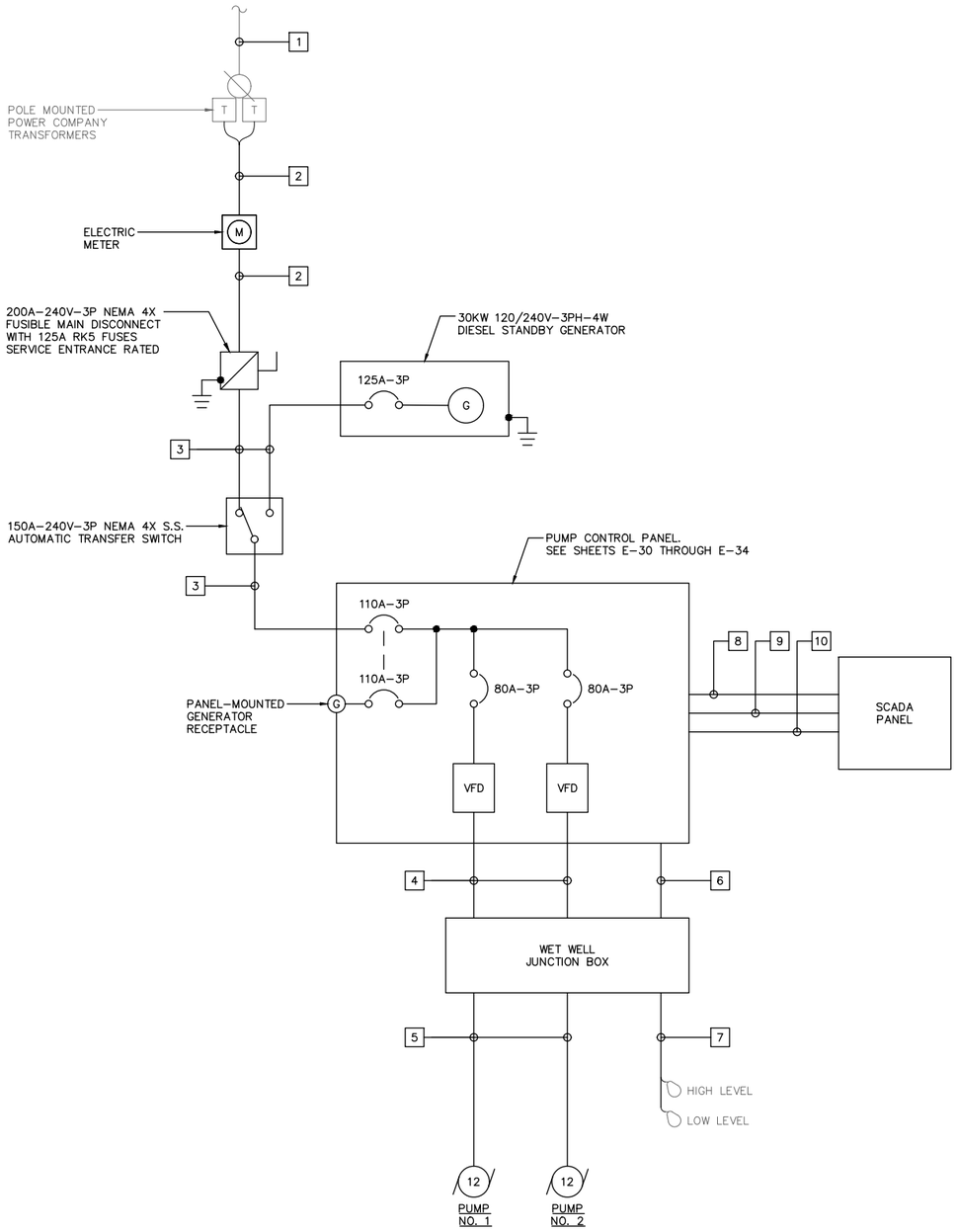

A ELECTRICAL ONE-LINE DIAGRAM

SCALE: NO SCALE

GENERAL NOTES:

1. COORDINATE RELOCATION OF ELECTRIC SERVICE WITH DUKE ENERGY.
2. REUSE EXISTING CONDUIT TO THE FULLEST EXTENT POSSIBLE.
3. CONDUITS SHOWN ARE REPRESENTATIVE ONLY. CONTRACTOR SHALL DETERMINE CONDUIT LOCATION AND ROUTING.
4. COORDINATE FLOAT LEVEL SWITCH ELEVATIONS WITH THE CITY.
5. EXISTING FLOATS NOT USED SHALL BE SECURED ABOVE THE HIGH LEVEL FLOAT FOR USE AS SPARES.

KEY NOTES:

1. PRIMARY OVERHEAD ELECTRIC SERVICE
2. 4#1 IN 1–1/2" CONDUIT
3. 4#1 AND #6 GND. IN 2" CONDUIT
4. 3#4, 4#14, AND #8 GND. IN 2" CONDUIT
5. SUBMERSIBLE PUMP CABLES IN 2" CONDUIT
6. 8#14 IN 2" CONDUIT
7. FLOAT SWITCH CABLES IN 2" CONDUIT
8. 10#14 (120VAC) AND #14 GND. IN 3/4" CONDUIT
9. 26#14 (24VDC) AND (6) 1 PR. #16 SHLD. IN 2" CONDUIT
10. (2) ETHERNET CABLES IN 1" CONDUIT

ELECTRICAL LOAD CALCULATION

LOAD DESCRIPTION	HP	CONN. LOAD (KVA)	DEMAND FACTOR (DF)	DEMAND LOAD (KVA)
SEWAGE PUMP NO. 1 (LARGEST MOTOR)	12	13.97	1.25	17.46
SEWAGE PUMP NO. 2	12	13.97	1.00	13.97
AUXILIARY EQUIPMENT		3.00	1.00	3.00
TOTAL:		30.93		34.43

ELECTRICAL LOAD SUMMARY

SERVICE VOLTAGE:	240	V
PHASE:	3	
CONNECTED LOAD:	30.93	KVA
	74.42	A
DEMAND LOAD:	34.43	KVA
	82.82	A
LOAD MULTIPLIER:	1.25	
MINIMUM SERVICE:	43.03	KVA
	103.52	A
SEVICE ENTRANCE TRIP RATING:	125	A
MINIMUM SHORT CIRCUIT CURRENT RATING:	22	KAIC

B ELECTRICAL LOAD CALCULATIONS

SCALE: NO SCALE

No.	Revisions	Date	By

Kimley»Horn
© 2025 KIMLEY-HORN AND ASSOCIATES, INC.
200 CENTRAL AVENUE, SUITE 600
ST. PETERSBURG, FL 33701
P: 727 547 3999
WWW.KIMLEY-HORN.COM REGISTRY NO. 35106

DESIGN ENGINEER:
JASON A. HOYT, P.E.
FL LICENSE NUMBER
101453
DATE:

SCALE: AS NOTED
DESIGN: JAH
DRAWN: EBW
CHECKED: JAH

LIFT STATION 10 REHABILITATION
ELECTRICAL ONE-LINE DIAGRAM

CITY OF ST. PETE BEACH
PUMP & LIFT STATION
REHABILITATIONS
PID# PS26-401-608-00
PINELLAS COUNY FLORIDA

DATE:
DECEMBER 2025

PROJECT NO.
148404108

SHEET NUMBER
E-09

NORTH

GRAPHIC SCALE IN FEET
0 2.5 5 10

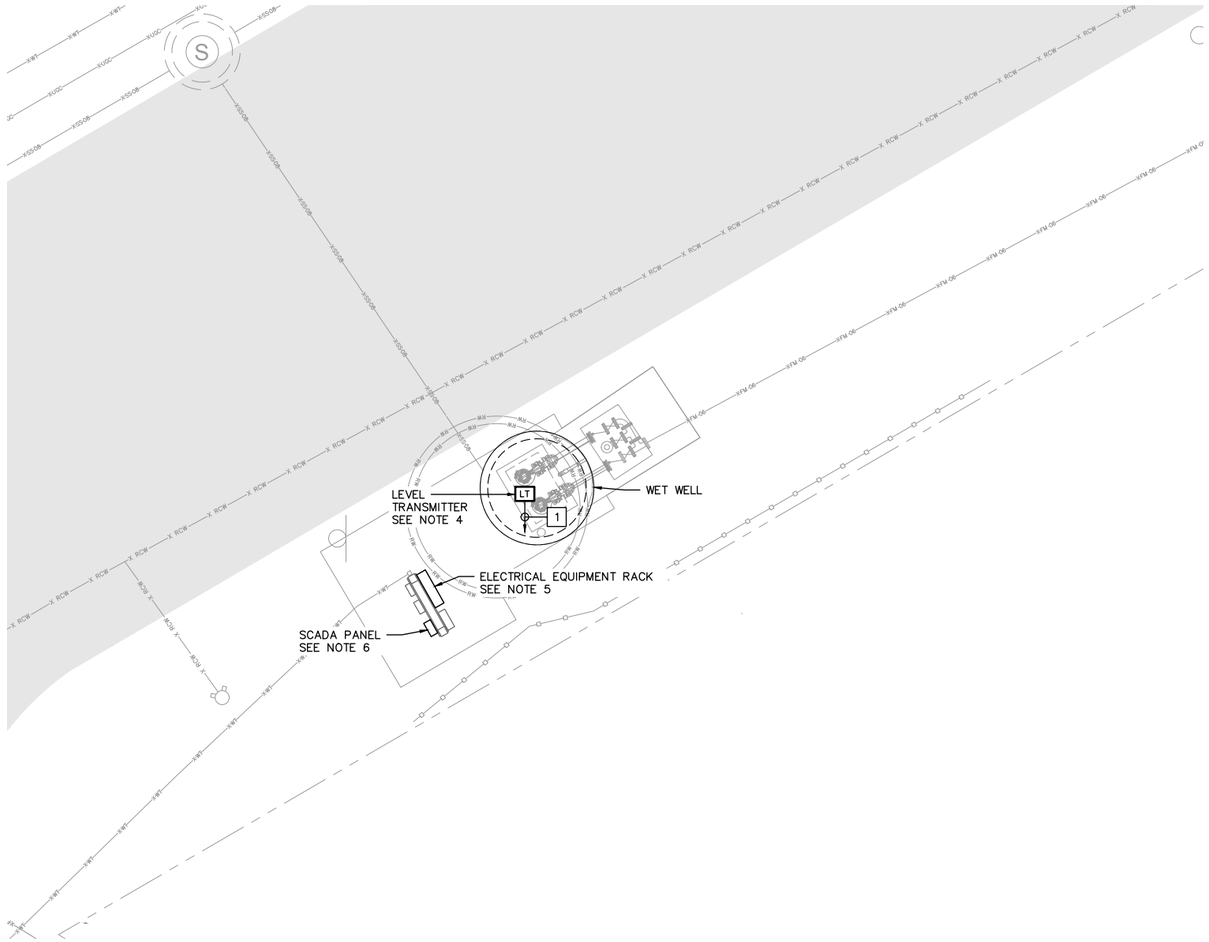

A ELECTRICAL SITE PLAN
SCALE: 1" = 5'

GENERAL NOTES:

1. REUSE EXISTING CONDUIT TO THE FULLEST EXTENT POSSIBLE.
2. CONDUITS SHOWN ARE REPRESENTATIVE ONLY. CONTRACTOR SHALL DETERMINE CONDUIT LOCATION AND ROUTING.
3. SEE ONE-LINE DIAGRAM ON SHEET E-11 FOR ADDITIONAL CONDUIT AND WIRING.
4. REPLACE EXISTING SUBMERSIBLE LEVEL TRANSMITTER WITH A RADAR LEVEL TRANSMITTER. SEE INSTALLATION DETAIL ON SHEET E-41.
5. REPLACE ATL PUMP CONTROL PANEL ON ELECTRICAL EQUIPMENT RACK. SEE EQUIPMENT RACK ELEVATION ON SHEET E-22 AND ATL PUMP CONTROL PANEL ON SHEETS E-26 THROUGH E-29.
6. CITY PROVIDED AND INSTALLED SCADA PANEL AND ANTENNA. COORDINATE REPLACEMENT WITH THE CITY.

KEY NOTES:

[1] LEVEL TRANSMITTER CABLE IN EXISTING 1-1/4" CONDUIT TO SCADA PANEL ON ELECTRICAL EQUIPMENT RACK.

No.	Revisions	Date	By

Kimley»Horn

© 2025 KIMLEY-HORN AND ASSOCIATES, INC.
200 CENTRAL AVENUE, SUITE 600
ST. PETERSBURG, FL 33701
P: 727 547 3999
WWW.KIMLEY-HORN.COM REGISTRY NO. 35106

DESIGN ENGINEER:
JASON A. HOYT, P.E.
FL LICENSE NUMBER
101453
DATE:

SCALE:	AS NOTED		
DESIGN:	JAH	DRAWN:	EBW
CHECKED:	JAH		

LIFT STATION 11 REHABILITATION
ELECTRICAL SITE PLAN

CITY OF ST. PETE BEACH
PUMP & LIFT STATION
REHABILITATIONS
PID# PS26-401-608-00

PINELLAS COUNY FLORIDA

DATE:
DECEMBER 2025

PROJECT NO.
148404108

SHEET NUMBER
E-10

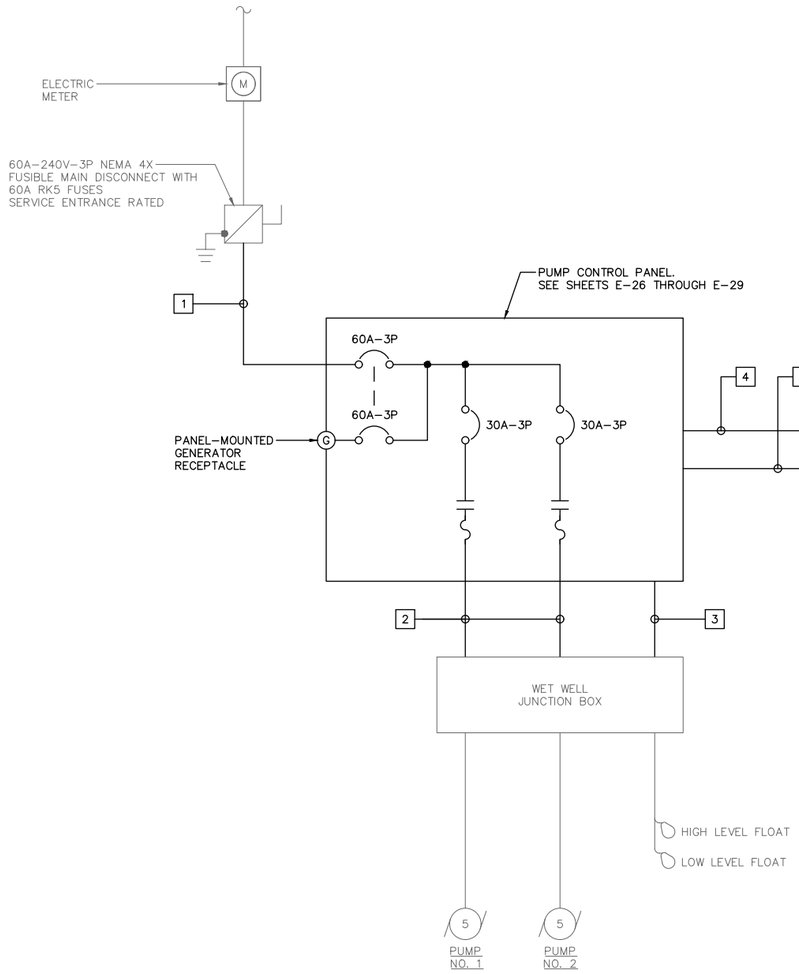

A ELECTRICAL ONE–LINE DIAGRAM

SCALE: NO SCALE

GENERAL NOTES:

1. REUSE EXISTING CONDUIT TO THE FULLEST EXTENT POSSIBLE.
2. CONDUITS SHOWN ARE REPRESENTATIVE ONLY. CONTRACTOR SHALL DETERMINE CONDUIT LOCATION AND ROUTING.
3. COORDINATE FLOAT LEVEL SWITCH ELEVATIONS WITH THE CITY.
4. EXISTING FLOATS NOT USED SHALL BE SECURED ABOVE THE HIGH LEVEL FLOAT FOR USE AS SPARES.

KEY NOTES:

1. 4#6 AND #10 GND. IN 1–1/4" CONDUIT
2. 3#10, 4#14, AND #10 GND. IN 2" CONDUIT
3. 8#14 IN 2" CONDUIT
4. 10#14 (120VAC) AND #14 GND. IN 2" CONDUIT
5. 36#14 (24VDC) AND (2) 1 PR. #16 SHLD. IN 2" CONDUIT

ELECTRICAL LOAD CALCULATION

LOAD DESCRIPTION	HP	CONN. LOAD (KVA)	DEMAND FACTOR (DF)	DEMAND LOAD (KVA)
SEWAGE PUMP NO. 1 (LARGEST MOTOR)	5	6.32	1.25	7.90
SEWAGE PUMP NO. 2	5	6.32	1.00	6.32
AUXILIARY EQUIPMENT		1.00	1.00	1.00
TOTAL:		13.64		15.22

ELECTRICAL LOAD SUMMARY

SERVICE VOLTAGE:	240	V
PHASE:	3	
CONNECTED LOAD:	13.64	KVA
	32.81	A
DEMAND LOAD:	15.22	KVA
	36.61	A
LOAD MULTIPLIER:	1.25	
MINIMUM SERVICE:	19.02	KVA
	45.76	A
SEVICE ENTRANCE TRIP RATING:	60	A
MINIMUM SHORT CIRCUIT CURRENT RATING:	22	KAIC

B ELECTRICAL LOAD CALCULATIONS

SCALE: NO SCALE

No.	Revisions	Date	By

Kimley»Horn
© 2025 KIMLEY-HORN AND ASSOCIATES, INC.
200 CENTRAL AVENUE, SUITE 600
ST. PETERSBURG, FL 33701
P: 727 547 3999
WWW.KIMLEY-HORN.COM REGISTRY NO. 35106

DESIGN ENGINEER: JASON A. HOYT, P.E.
FL LICENSE NUMBER 101453
DATE:

SCALE: AS NOTED
DESIGN: JAH
DRAWN: EBW
CHECKED: JAH

LIFT STATION 11 REHABILITATION
ELECTRICAL ONE-LINE DIAGRAM

CITY OF ST. PETE BEACH
PUMP & LIFT STATION REHABILITATIONS
PID# PS26-401-608-00
FLORIDA
PINELLAS COUNY

DATE: DECEMBER 2025

PROJECT NO. 148404108

SHEET NUMBER E-11

NORTH

GRAPHIC SCALE IN FEET
0 2.5 5 10

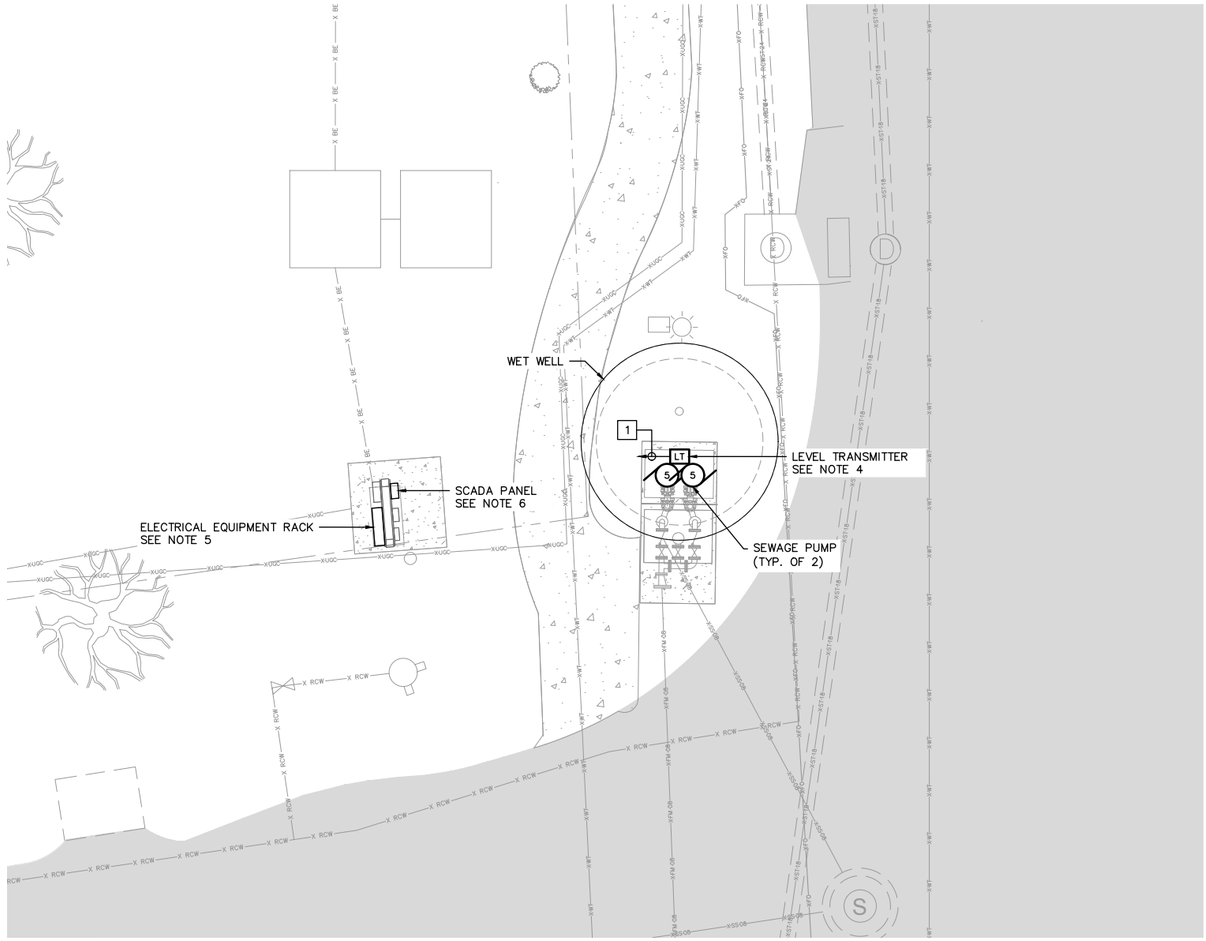

A ELECTRICAL SITE PLAN
SCALE: 1" = 5'

GENERAL NOTES:

1. REUSE EXISTING CONDUIT TO THE FULLEST EXTENT POSSIBLE.
2. CONDUITS SHOWN ARE REPRESENTATIVE ONLY. CONTRACTOR SHALL DETERMINE CONDUIT LOCATION AND ROUTING.
3. SEE ONE-LINE DIAGRAM ON SHEET E-13 FOR ADDITIONAL CONDUIT AND WIRING.
4. REPLACE EXISTING SUBMERSIBLE LEVEL TRANSMITTER WITH A RADAR LEVEL TRANSMITTER. SEE INSTALLATION DETAIL ON SHEET E-41.
5. REPLACE ATL PUMP CONTROL PANEL ON ELECTRICAL EQUIPMENT RACK. SEE EQUIPMENT RACK ELEVATION ON SHEET E-22 AND ATL PUMP CONTROL PANEL ON SHEETS E-26 THROUGH E-29.
6. CITY PROVIDED AND INSTALLED SCADA PANEL AND ANTENNA. COORDINATE REPLACEMENT WITH THE CITY.

KEY NOTES:

[1] LEVEL TRANSMITTER CABLE IN EXISTING 1-1/4" CONDUIT TO SCADA PANEL ON ELECTRICAL EQUIPMENT RACK.

No.	Revisions	Date	By

Kimley»Horn

© 2025 KIMLEY-HORN AND ASSOCIATES, INC.
200 CENTRAL AVENUE, SUITE 600
ST. PETERSBURG, FL 33701
P: 727 547 3999
WWW.KIMLEY-HORN.COM REGISTRY NO. 35106

DESIGN ENGINEER:
JASON A. HOYT, P.E.
FL LICENSE NUMBER
101453
DATE:

SCALE: AS NOTED
DESIGN: JAH
DRAWN: EBW
CHECKED: JAH

LIFT STATION 12 REHABILITATION
ELECTRICAL SITE PLAN

CITY OF ST. PETE BEACH
PUMP & LIFT STATION
REHABILITATIONS
PID# PS26-401-608-00
PINELLAS COUNY FLORIDA

DATE:
DECEMBER 2025

PROJECT NO.
148404108

SHEET NUMBER
E-12

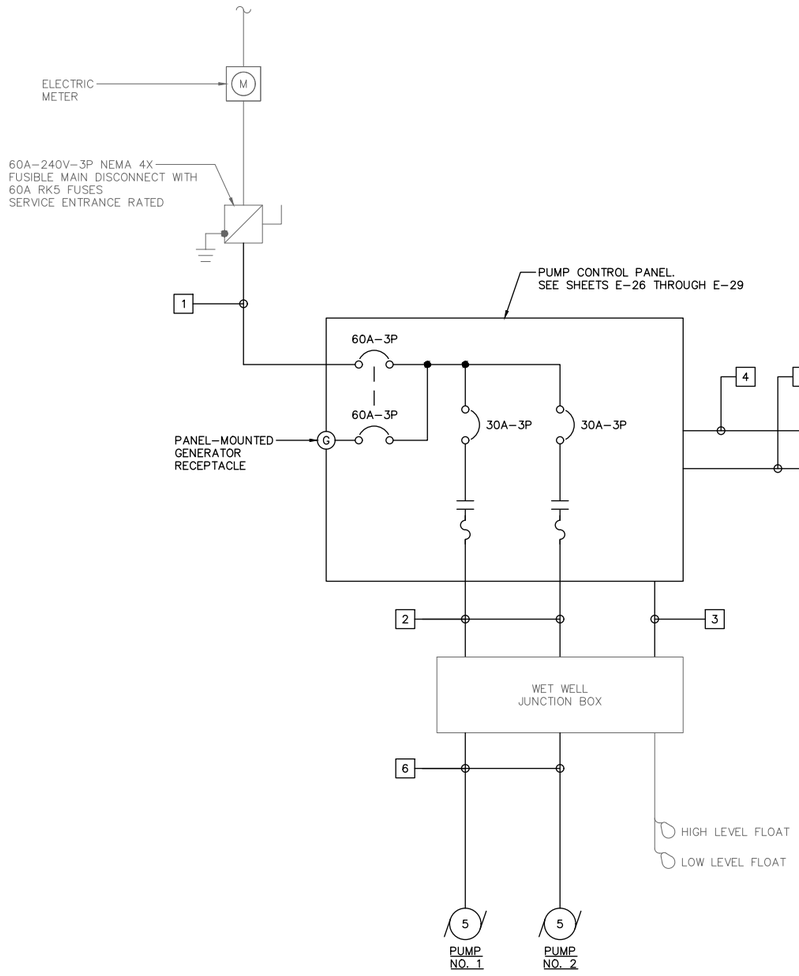

A ELECTRICAL ONE–LINE DIAGRAM

SCALE: NO SCALE

GENERAL NOTES:

1. REUSE EXISTING CONDUIT TO THE FULLEST EXTENT POSSIBLE.
2. CONDUITS SHOWN ARE REPRESENTATIVE ONLY. CONTRACTOR SHALL DETERMINE CONDUIT LOCATION AND ROUTING.
3. COORDINATE FLOAT LEVEL SWITCH ELEVATIONS WITH THE CITY.
4. EXISTING FLOATS NOT USED SHALL BE SECURED ABOVE THE HIGH LEVEL FLOAT FOR USE AS SPARES.

KEY NOTES:

1. 4#6 AND #10 GND. IN 1–1/4" CONDUIT
2. 3#10, 4#14, AND #10 GND. IN 2" CONDUIT
3. 8#14 IN 2" CONDUIT
4. 10#14 (120VAC) AND #14 GND. IN 2" CONDUIT
5. 36#14 (24VDC) AND (2) 1 PR. #16 SHLD. IN 2" CONDUIT
6. SUBMERSIBLE PUMP CABLES IN 2" CONDUIT

ELECTRICAL LOAD CALCULATION

LOAD DESCRIPTION	HP	CONN. LOAD (KVA)	DEMAND FACTOR (DF)	DEMAND LOAD (KVA)
SEWAGE PUMP NO. 1 (LARGEST MOTOR)	5	6.32	1.25	7.90
SEWAGE PUMP NO. 2	5	6.32	1.00	6.32
AUXILIARY EQUIPMENT		1.00	1.00	1.00
TOTAL:		13.64		15.22

ELECTRICAL LOAD SUMMARY

SERVICE VOLTAGE:	240	V
PHASE:	3	
CONNECTED LOAD:	13.64	KVA
	32.81	A
DEMAND LOAD:	15.22	KVA
	36.61	A
LOAD MULTIPLIER:	1.25	
MINIMUM SERVICE:	19.02	KVA
	45.76	A
SEVICE ENTRANCE TRIP RATING:	60	A
MINIMUM SHORT CIRCUIT CURRENT RATING:	22	KAIC

B ELECTRICAL LOAD CALCULATIONS

SCALE: NO SCALE

No.	Revisions	Date	By

Kimley»Horn
© 2025 KIMLEY-HORN AND ASSOCIATES, INC.
200 CENTRAL AVENUE, SUITE 600
ST. PETERSBURG, FL 33701
P: 727 547 3999
WWW.KIMLEY-HORN.COM REGISTRY NO. 35106

DESIGN ENGINEER: JASON A. HOYT, P.E.
FL LICENSE NUMBER 101453
DATE:

SCALE: AS NOTED
DESIGN: JAH
DRAWN: EBW
CHECKED: JAH

LIFT STATION 12 REHABILITATION
ELECTRICAL ONE-LINE DIAGRAM

CITY OF ST. PETE BEACH
PUMP & LIFT STATION REHABILITATIONS
PID# PS26-401-608-00
FLORIDA
PINELLAS COUNY

DATE: DECEMBER 2025

PROJECT NO. 148404108

SHEET NUMBER E-13

NORTH

GRAPHIC SCALE IN FEET
0 2.5 5 10

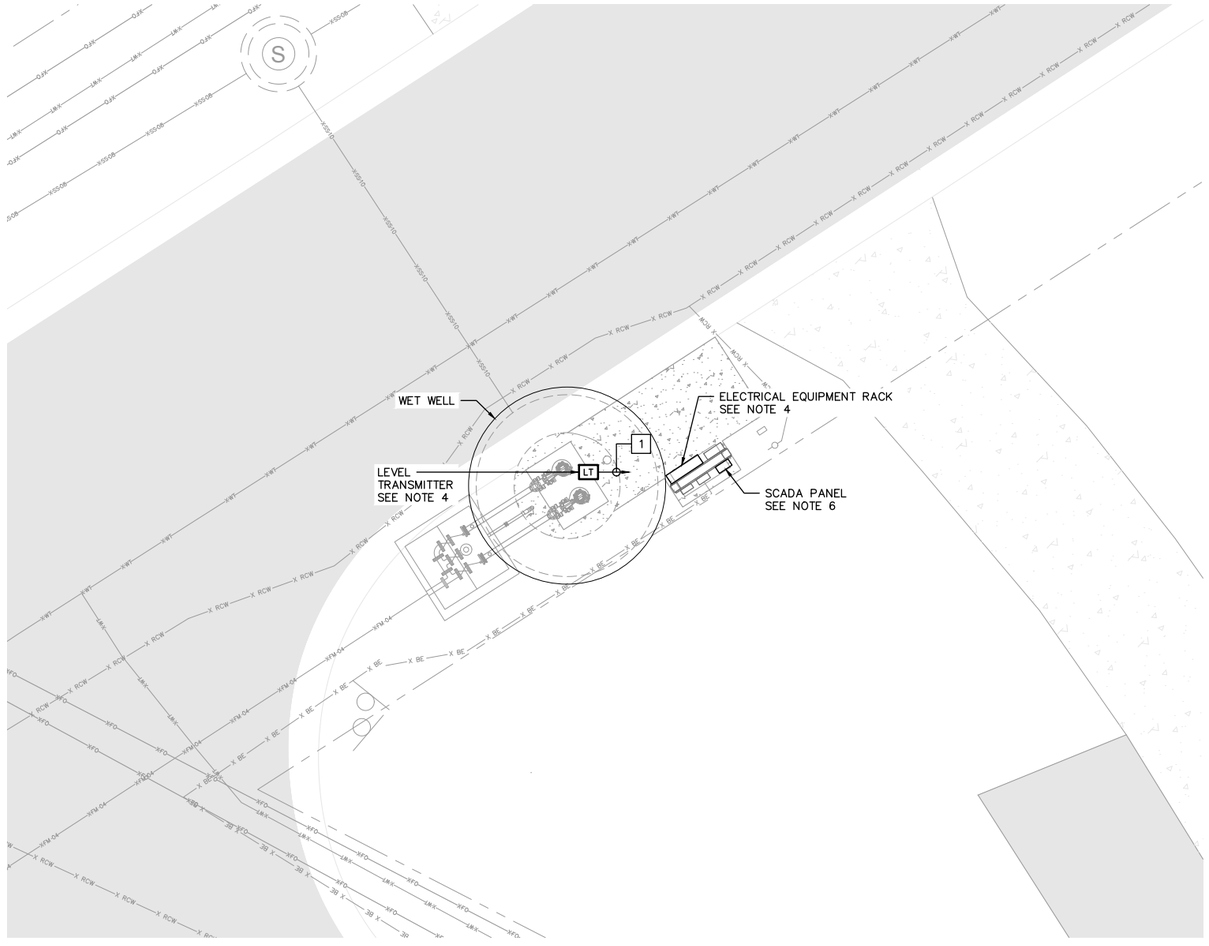

A ELECTRICAL SITE PLAN
SCALE: 1" = 5'

GENERAL NOTES:

1. REUSE EXISTING CONDUIT TO THE FULLEST EXTENT POSSIBLE.
2. CONDUITS SHOWN ARE REPRESENTATIVE ONLY. CONTRACTOR SHALL DETERMINE CONDUIT LOCATION AND ROUTING.
3. SEE ONE-LINE DIAGRAM ON SHEET E-15 FOR ADDITIONAL CONDUIT AND WIRING.
4. REPLACE EXISTING SUBMERSIBLE LEVEL TRANSMITTER WITH A RADAR LEVEL TRANSMITTER. SEE INSTALLATION DETAIL ON SHEET E-41.
5. REPLACE ATL PUMP CONTROL PANEL ON ELECTRICAL EQUIPMENT RACK. SEE EQUIPMENT RACK ELEVATION ON SHEET E-22 AND ATL PUMP CONTROL PANEL ON SHEETS E-26 THROUGH E-29.
6. CITY PROVIDED AND INSTALLED SCADA PANEL AND ANTENNA. COORDINATE REPLACEMENT WITH THE CITY.

KEY NOTES:

[1] LEVEL TRANSMITTER CABLE IN EXISTING 1-1/4" CONDUIT TO SCADA PANEL ON ELECTRICAL EQUIPMENT RACK.

No.	Revisions	Date	By

Kimley»Horn

© 2025 KIMLEY-HORN AND ASSOCIATES, INC.
200 CENTRAL AVENUE, SUITE 600
ST. PETERSBURG, FL 33701
P: 727 547 3999
WWW.KIMLEY-HORN.COM REGISTRY NO. 35106

DESIGN ENGINEER:
JASON A. HOYT, P.E.
FL LICENSE NUMBER
101453
DATE:

SCALE: AS NOTED
DESIGN: JAH
DRAWN: EBW
CHECKED: JAH

LIFT STATION 13 REHABILITATION
ELECTRICAL SITE PLAN

CITY OF ST. PETE BEACH
PUMP & LIFT STATION
REHABILITATIONS
PID# PS26-401-608-00
PINELLAS COUNY FLORIDA

DATE:
DECEMBER 2025

PROJECT NO.
148404108

SHEET NUMBER
E-14

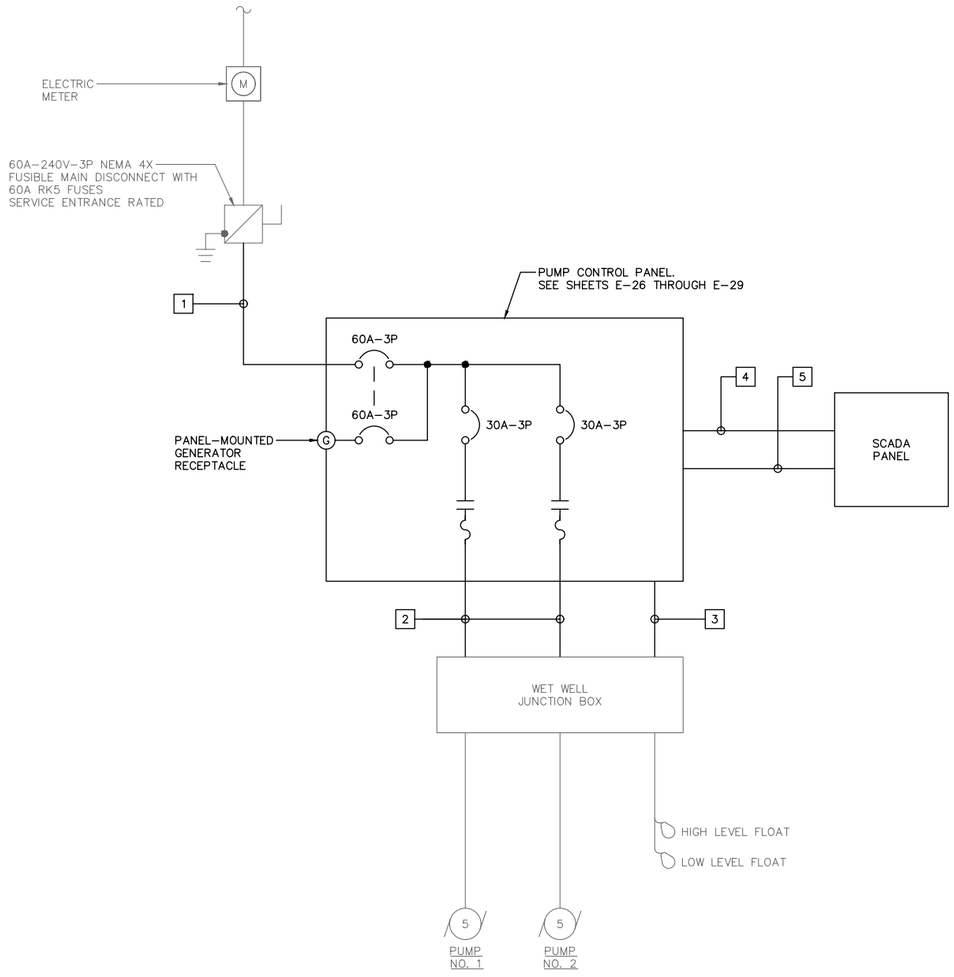

A ELECTRICAL ONE–LINE DIAGRAM

SCALE: NO SCALE

GENERAL NOTES:

1. REUSE EXISTING CONDUIT TO THE FULLEST EXTENT POSSIBLE.
2. CONDUITS SHOWN ARE REPRESENTATIVE ONLY. CONTRACTOR SHALL DETERMINE CONDUIT LOCATION AND ROUTING.
3. COORDINATE FLOAT LEVEL SWITCH ELEVATIONS WITH THE CITY.
4. EXISTING FLOATS NOT USED SHALL BE SECURED ABOVE THE HIGH LEVEL FLOAT FOR USE AS SPARES.

KEY NOTES:

1. 4#6 AND #10 GND. IN 1–1/4" CONDUIT
2. 3#10, 4#14, AND #10 GND. IN 2" CONDUIT
3. 8#14 IN 2" CONDUIT
4. 10#14 (120VAC) AND #14 GND. IN 2" CONDUIT
5. 36#14 (24VDC) AND (2) 1 PR. #16 SHLD. IN 2" CONDUIT

ELECTRICAL LOAD CALCULATION

LOAD DESCRIPTION	HP	CONN. LOAD (KVA)	DEMAND FACTOR (DF)	DEMAND LOAD (KVA)
SEWAGE PUMP NO. 1 (LARGEST MOTOR)	5	6.32	1.25	7.90
SEWAGE PUMP NO. 2	5	6.32	1.00	6.32
AUXILIARY EQUIPMENT		1.00	1.00	1.00
TOTAL:		13.64		15.22

ELECTRICAL LOAD SUMMARY

SERVICE VOLTAGE:	240	V
PHASE:	3	
CONNECTED LOAD:	13.64	KVA
	32.81	A
DEMAND LOAD:	15.22	KVA
	36.61	A
LOAD MULTIPLIER:	1.25	
MINIMUM SERVICE:	19.02	KVA
	45.76	A
SEVICE ENTRANCE TRIP RATING:	60	A
MINIMUM SHORT CIRCUIT CURRENT RATING:	22	KAIC

B ELECTRICAL LOAD CALCULATIONS

SCALE: NO SCALE

No.	Revisions	Date	By

Kimley»Horn
© 2025 KIMLEY-HORN AND ASSOCIATES, INC.
200 CENTRAL AVENUE, SUITE 600
ST. PETERSBURG, FL 33701
P: 727 547 3999
WWW.KIMLEY-HORN.COM REGISTRY NO. 35106

DESIGN ENGINEER: JASON A. HOYT, P.E.
FL LICENSE NUMBER 101453
DATE:

SCALE: AS NOTED
DESIGN: JAH
DRAWN: EBW
CHECKED: JAH

LIFT STATION 13 REHABILITATION
ELECTRICAL ONE-LINE DIAGRAM

CITY OF ST. PETE BEACH
PUMP & LIFT STATION REHABILITATIONS
PID# PS26-401-608-00
FLORIDA
PINELLAS COUNY

DATE: DECEMBER 2025

PROJECT NO. 148404108

SHEET NUMBER E-15

NORTH

GRAPHIC SCALE IN FEET
0 2.5 5 10

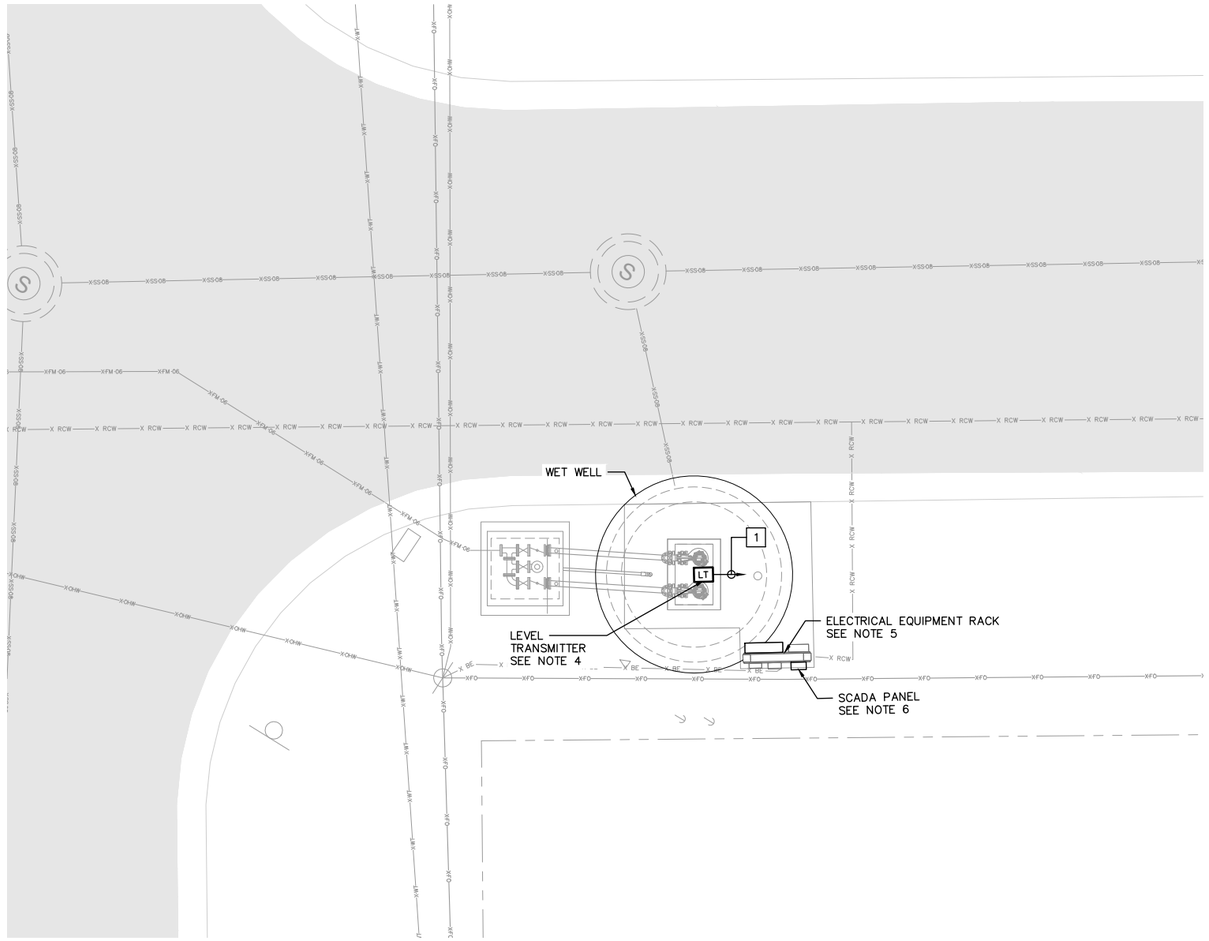

A ELECTRICAL SITE PLAN
SCALE: 1" = 5'

GENERAL NOTES:

1. REUSE EXISTING CONDUIT TO THE FULLEST EXTENT POSSIBLE.
2. CONDUITS SHOWN ARE REPRESENTATIVE ONLY. CONTRACTOR SHALL DETERMINE CONDUIT LOCATION AND ROUTING.
3. SEE ONE-LINE DIAGRAM ON SHEET E-17 FOR ADDITIONAL CONDUIT AND WIRING.
4. REPLACE EXISTING SUBMERSIBLE LEVEL TRANSMITTER WITH A RADAR LEVEL TRANSMITTER. SEE INSTALLATION DETAIL ON SHEET E-41.
5. REPLACE ATL PUMP CONTROL PANEL ON ELECTRICAL EQUIPMENT RACK. SEE EQUIPMENT RACK ELEVATION ON SHEET E-22 AND ATL PUMP CONTROL PANEL ON SHEETS E-26 THROUGH E-29.
6. CITY PROVIDED AND INSTALLED SCADA PANEL AND ANTENNA. COORDINATE REPLACEMENT WITH THE CITY.

KEY NOTES:

[1] LEVEL TRANSMITTER CABLE IN EXISTING 1-1/4" CONDUIT TO SCADA PANEL ON ELECTRICAL EQUIPMENT RACK.

No.	Revisions	Date	By

Kimley»Horn

© 2025 KIMLEY-HORN AND ASSOCIATES, INC.
200 CENTRAL AVENUE, SUITE 600
ST. PETERSBURG, FL 33701
P: 727 547 3999
WWW.KIMLEY-HORN.COM REGISTRY NO. 35106

DESIGN ENGINEER:
JASON A. HOYT, P.E.
FL LICENSE NUMBER
101453
DATE:

SCALE: AS NOTED
DESIGN: JAH
DRAWN: EBW
CHECKED: JAH

LIFT STATION 14 REHABILITATION
ELECTRICAL SITE PLAN

CITY OF ST. PETE BEACH
PUMP & LIFT STATION
REHABILITATIONS
PID# PS26-401-608-00
PINELLAS COUNY FLORIDA

DATE:
DECEMBER 2025

PROJECT NO.
148404108

SHEET NUMBER
E-16

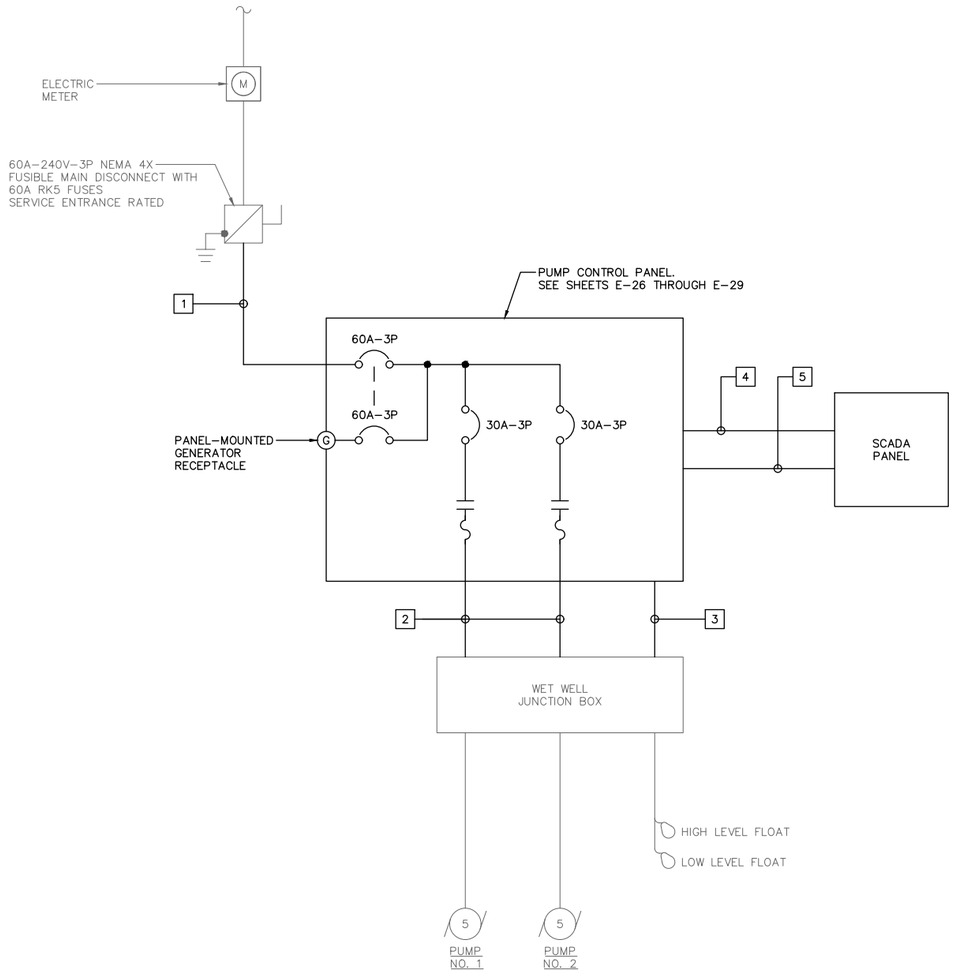

A ELECTRICAL ONE–LINE DIAGRAM

SCALE: NO SCALE

GENERAL NOTES:

1. REUSE EXISTING CONDUIT TO THE FULLEST EXTENT POSSIBLE.
2. CONDUITS SHOWN ARE REPRESENTATIVE ONLY. CONTRACTOR SHALL DETERMINE CONDUIT LOCATION AND ROUTING.
3. COORDINATE FLOAT LEVEL SWITCH ELEVATIONS WITH THE CITY.
4. EXISTING FLOATS NOT USED SHALL BE SECURED ABOVE THE HIGH LEVEL FLOAT FOR USE AS SPARES.

KEY NOTES:

1. 4#6 AND #10 GND. IN 1–1/4" CONDUIT
2. 3#10, 4#14, AND #10 GND. IN 2" CONDUIT
3. 8#14 IN 2" CONDUIT
4. 10#14 (120VAC) AND #14 GND. IN 2" CONDUIT
5. 36#14 (24VDC) AND (2) 1 PR. #16 SHLD. IN 2" CONDUIT

ELECTRICAL LOAD CALCULATION

LOAD DESCRIPTION	HP	CONN. LOAD (KVA)	DEMAND FACTOR (DF)	DEMAND LOAD (KVA)
SEWAGE PUMP NO. 1 (LARGEST MOTOR)	5	6.32	1.25	7.90
SEWAGE PUMP NO. 2	5	6.32	1.00	6.32
AUXILIARY EQUIPMENT		1.00	1.00	1.00
TOTAL:		13.64		15.22

ELECTRICAL LOAD SUMMARY

SERVICE VOLTAGE:	240	V
PHASE:	3	
CONNECTED LOAD:	13.64	KVA
	32.81	A
DEMAND LOAD:	15.22	KVA
	36.61	A
LOAD MULTIPLIER:	1.25	
MINIMUM SERVICE:	19.02	KVA
	45.76	A
SEVICE ENTRANCE TRIP RATING:	60	A
MINIMUM SHORT CIRCUIT CURRENT RATING:	22	KAIC

B ELECTRICAL LOAD CALCULATIONS

SCALE: NO SCALE

No.	Revisions	Date	By

Kimley»Horn
© 2025 KIMLEY-HORN AND ASSOCIATES, INC.
200 CENTRAL AVENUE, SUITE 600
ST. PETERSBURG, FL 33701
P: 727 547 3999
WWW.KIMLEY-HORN.COM REGISTRY NO. 35106

DESIGN ENGINEER: JASON A. HOYT, P.E.
FL LICENSE NUMBER 101453
DATE:

SCALE: AS NOTED
DESIGN: JAH
DRAWN: EBW
CHECKED: JAH

LIFT STATION 14 REHABILITATION
ELECTRICAL ONE-LINE DIAGRAM

CITY OF ST. PETE BEACH
PUMP & LIFT STATION REHABILITATIONS
PID# PS26-401-608-00
FLORIDA
PINELLAS COUNY

DATE: DECEMBER 2025

PROJECT NO. 148404108

SHEET NUMBER E-17

NORTH

GRAPHIC SCALE IN FEET
0 ### # ##

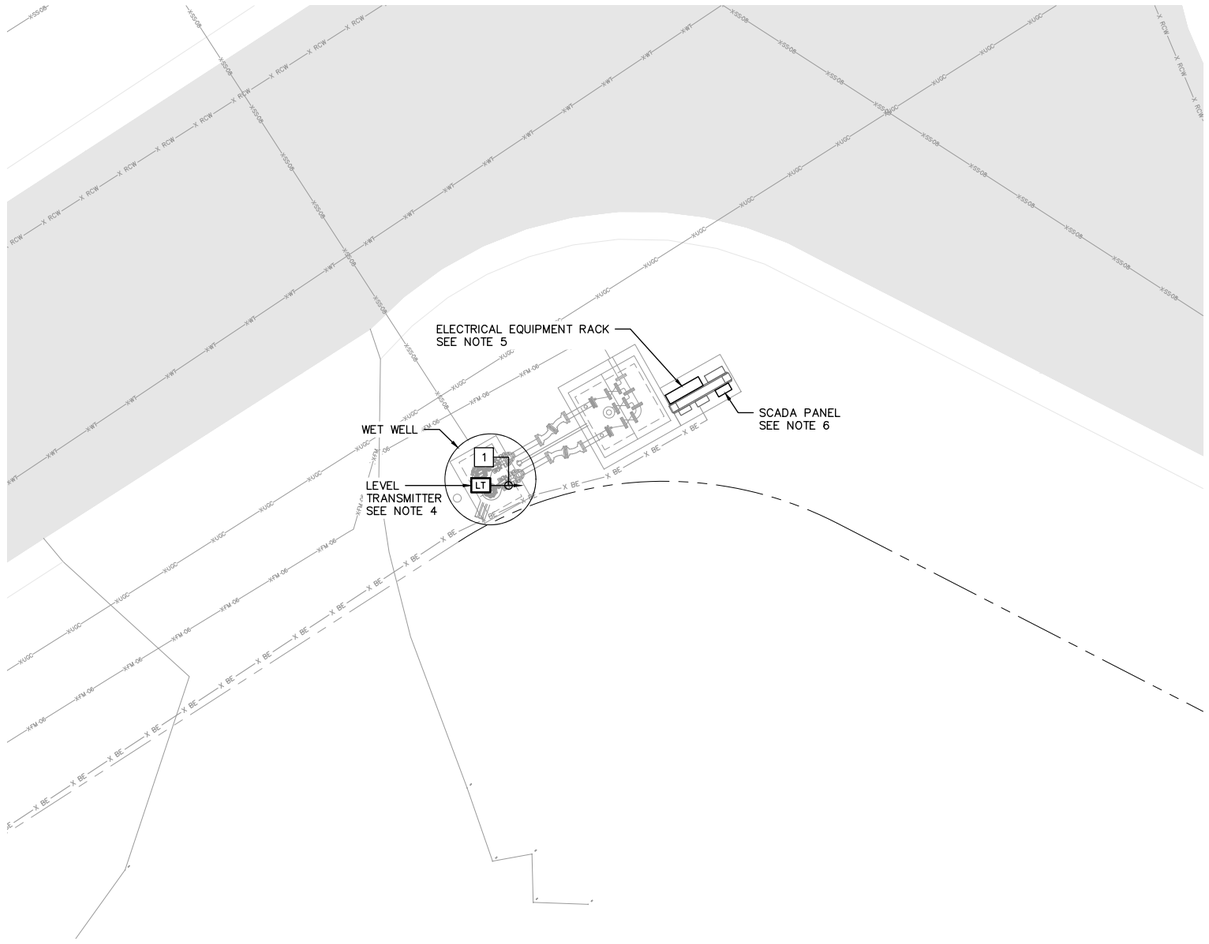

A ELECTRICAL SITE PLAN
SCALE: 1" = 5'

GENERAL NOTES:

1. REUSE EXISTING CONDUIT TO THE FULLEST EXTENT POSSIBLE.
2. CONDUITS SHOWN ARE REPRESENTATIVE ONLY. CONTRACTOR SHALL DETERMINE CONDUIT LOCATION AND ROUTING.
3. SEE ONE-LINE DIAGRAM ON SHEET E-19 FOR ADDITIONAL CONDUIT AND WIRING.
4. REPLACE EXISTING SUBMERSIBLE LEVEL TRANSMITTER WITH A RADAR LEVEL TRANSMITTER. SEE INSTALLATION DETAIL ON SHEET E-41.
5. REPLACE ATL PUMP CONTROL PANEL ON ELECTRICAL EQUIPMENT RACK. SEE EQUIPMENT RACK ELEVATION ON SHEET E-22 AND ATL PUMP CONTROL PANEL ON SHEETS E-26 THROUGH E-29.
6. CITY PROVIDED AND INSTALLED SCADA PANEL AND ANTENNA. COORDINATE REPLACEMENT WITH THE CITY.

KEY NOTES:

[1] LEVEL TRANSMITTER CABLE IN EXISTING 1-1/4" CONDUIT TO SCADA PANEL ON ELECTRICAL EQUIPMENT RACK.

No.	Revisions	Date	By

Kimley»Horn

© 2025 KIMLEY-HORN AND ASSOCIATES, INC.
200 CENTRAL AVENUE, SUITE 600
ST. PETERSBURG, FL 33701
P: 727 547 3999
WWW.KIMLEY-HORN.COM REGISTRY NO. 35106

DESIGN ENGINEER:
JASON A. HOYT, P.E.
FL LICENSE NUMBER
101453
DATE:

SCALE: AS NOTED
DESIGN: JAH
DRAWN: EBW
CHECKED: JAH

LIFT STATION 15 REHABILITATION
ELECTRICAL SITE PLAN

CITY OF ST. PETE BEACH
PUMP & LIFT STATION
REHABILITATIONS
PID# PS26-401-608-00
PINELLAS COUNY FLORIDA

DATE:
DECEMBER 2025

PROJECT NO.
148404108

SHEET NUMBER
E-18

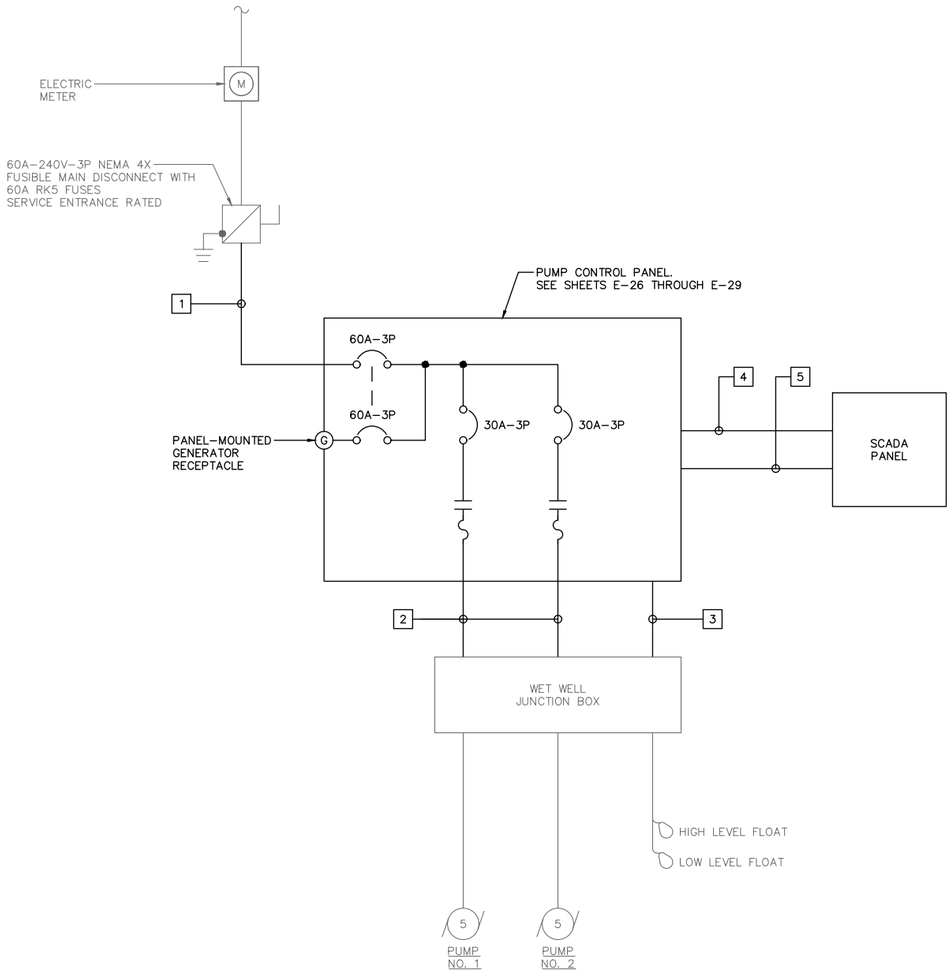

A ELECTRICAL ONE–LINE DIAGRAM

SCALE: NO SCALE

GENERAL NOTES:

1. REUSE EXISTING CONDUIT TO THE FULLEST EXTENT POSSIBLE.
2. CONDUITS SHOWN ARE REPRESENTATIVE ONLY. CONTRACTOR SHALL DETERMINE CONDUIT LOCATION AND ROUTING.
3. COORDINATE FLOAT LEVEL SWITCH ELEVATIONS WITH THE CITY.
4. EXISTING FLOATS NOT USED SHALL BE SECURED ABOVE THE HIGH LEVEL FLOAT FOR USE AS SPARES.

KEY NOTES:

1. 4#6 AND #10 GND. IN 1–1/4" CONDUIT
2. 3#10, 4#14, AND #10 GND. IN 2" CONDUIT
3. 8#14 IN 2" CONDUIT
4. 10#14 (120VAC) AND #14 GND. IN 2" CONDUIT
5. 36#14 (24VDC) AND (2) 1 PR. #16 SHLD. IN 2" CONDUIT

ELECTRICAL LOAD CALCULATION

LOAD DESCRIPTION	HP	CONN. LOAD (KVA)	DEMAND FACTOR (DF)	DEMAND LOAD (KVA)
SEWAGE PUMP NO. 1 (LARGEST MOTOR)	5	6.32	1.25	7.90
SEWAGE PUMP NO. 2	5	6.32	1.00	6.32
AUXILIARY EQUIPMENT		1.00	1.00	1.00
TOTAL:		13.64		15.22

ELECTRICAL LOAD SUMMARY

SERVICE VOLTAGE:	240	V
PHASE:	3	
CONNECTED LOAD:	13.64	KVA
	32.81	A
DEMAND LOAD:	15.22	KVA
	36.61	A
LOAD MULTIPLIER:	1.25	
MINIMUM SERVICE:	19.02	KVA
	45.76	A
SEVICE ENTRANCE TRIP RATING:	60	A
MINIMUM SHORT CIRCUIT CURRENT RATING:	22	KAIC

B ELECTRICAL LOAD CALCULATIONS

SCALE: NO SCALE

No.	Revisions	Date	By

Kimley»Horn
© 2025 KIMLEY-HORN AND ASSOCIATES, INC.
200 CENTRAL AVENUE, SUITE 600
ST. PETERSBURG, FL 33701
P: 727 547 3999
WWW.KIMLEY-HORN.COM REGISTRY NO. 35106

DESIGN ENGINEER:
JASON A. HOYT, P.E.
FL LICENSE NUMBER
101453
DATE:

SCALE: AS NOTED
DESIGN: JAH
DRAWN: EBW
CHECKED: JAH

LIFT STATION 15 REHABILITATION
ELECTRICAL ONE-LINE DIAGRAM

CITY OF ST. PETE BEACH
PUMP & LIFT STATION
REHABILITATIONS
PID# PS26-401-608-00
FLORIDA
PINELLAS COUNY

DATE:
DECEMBER 2025

PROJECT NO.
148404108

SHEET NUMBER
E-19

NORTH

GRAPHIC SCALE IN FEET
0 2.5 5 10



A ELECTRICAL SITE PLAN
SCALE: 1" = 5'

GENERAL NOTES:

1. REUSE EXISTING CONDUIT TO THE FULLEST EXTENT POSSIBLE.
2. CONDUITS SHOWN ARE REPRESENTATIVE ONLY. CONTRACTOR SHALL DETERMINE CONDUIT LOCATION AND ROUTING.
3. SEE ONE-LINE DIAGRAM ON SHEET E-21 FOR ADDITIONAL CONDUIT AND WIRING.
4. REPLACE EXISTING SUBMERSIBLE LEVEL TRANSMITTER WITH A RADAR LEVEL TRANSMITTER. SEE INSTALLATION DETAIL ON SHEET E-41.
5. REPLACE PUMP CONTROL PANEL ON ELECTRICAL EQUIPMENT RACK. SEE EQUIPMENT RACK ELEVATION ON SHEET E-25 AND PUMP CONTROL PANEL ON SHEETS E-35 THROUGH E-39.
6. CITY PROVIDED AND INSTALLED SCADA PANEL AND ANTENNA. COORDINATE REPLACEMENT WITH THE CITY.

KEY NOTES:

1 LEVEL TRANSMITTER CABLE IN EXISTING 1-1/4" CONDUIT TO SCADA PANEL ON ELECTRICAL EQUIPMENT RACK.

No.	Revisions	Date	By

Kimley»Horn

© 2025 KIMLEY-HORN AND ASSOCIATES, INC.
200 CENTRAL AVENUE, SUITE 600
ST. PETERSBURG, FL 33701
P: 727 547 3999
WWW.KIMLEY-HORN.COM REGISTRY NO. 35106

DESIGN ENGINEER:
JASON A. HOYT, P.E.
FL LICENSE NUMBER
101453
DATE:

SCALE: AS NOTED
DESIGN: JAH
DRAWN: EBW
CHECKED: JAH

STORMWATER LS 35
REHABILITATION ELECTRICAL SITE
PLAN

CITY OF ST. PETE BEACH
PUMP & LIFT STATION
REHABILITATIONS
PID# PS26-401-608-00
PINELLAS COUNY FLORIDA

DATE:
DECEMBER 2025

PROJECT NO.
148404108

SHEET NUMBER
E-20

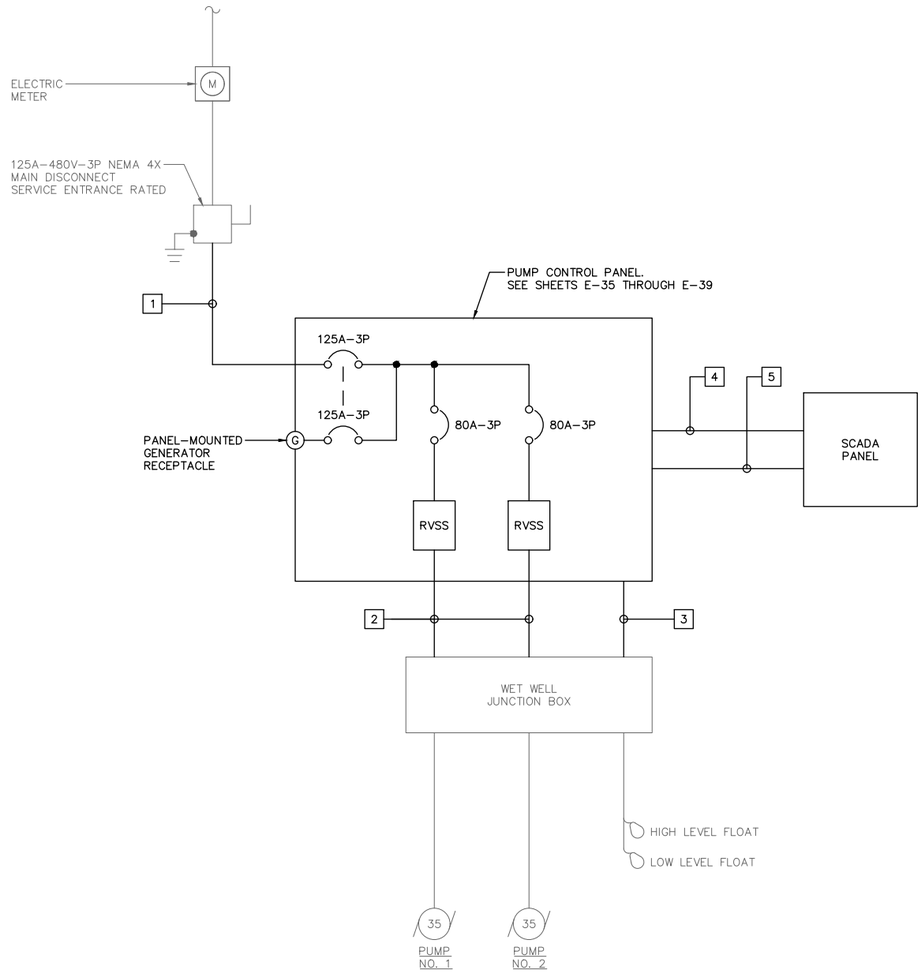

A ELECTRICAL ONE–LINE DIAGRAM

SCALE: NO SCALE

GENERAL NOTES:

1. REUSE EXISTING CONDUIT TO THE FULLEST EXTENT POSSIBLE.
2. CONDUITS SHOWN ARE REPRESENTATIVE ONLY. CONTRACTOR SHALL DETERMINE CONDUIT LOCATION AND ROUTING.
3. COORDINATE FLOAT LEVEL SWITCH ELEVATIONS WITH THE CITY.
4. EXISTING FLOATS NOT USED SHALL BE SECURED ABOVE THE HIGH LEVEL FLOAT FOR USE AS SPARES.

KEY NOTES:

1. 4#1 AND #6 GND. IN 2" CONDUIT
2. 3#4, 4#14, AND #8 GND. IN 2" CONDUIT
3. 8#14 IN 2" CONDUIT
4. 10#14 (120VAC) AND #14 GND. IN 2" CONDUIT
5. 36#14 (24VDC) AND (2) 1 PR. #16 SHLD. IN 2" CONDUIT

ELECTRICAL LOAD CALCULATION

LOAD DESCRIPTION	HP	CONN. LOAD (KVA)	DEMAND FACTOR (DF)	DEMAND LOAD (KVA)
SEWAGE PUMP NO. 1 (LARGEST MOTOR)	35	38.24	1.25	47.80
SEWAGE PUMP NO. 2	35	38.24	1.00	38.24
AUXILIARY EQUIPMENT		3.00	1.00	3.00
TOTAL:		79.49		89.05

ELECTRICAL LOAD SUMMARY

SERVICE VOLTAGE:	480	V
PHASE:	3	
CONNECTED LOAD:	79.49	KVA
	95.61	A
DEMAND LOAD:	89.05	KVA
	107.11	A
LOAD MULTIPLIER:	1.25	
MINIMUM SERVICE:	111.31	KVA
	133.89	A
SEVICE ENTRANCE TRIP RATING:	125	A
MINIMUM SHORT CIRCUIT CURRENT RATING:	22	KAIC

B ELECTRICAL LOAD CALCULATIONS

SCALE: NO SCALE

No.	Revisions	Date	By

Kimley»Horn
© 2025 KIMLEY-HORN AND ASSOCIATES, INC.
200 CENTRAL AVENUE, SUITE 600
ST. PETERSBURG, FL 33701
P: 727 547 3999
WWW.KIMLEY-HORN.COM REGISTRY NO. 35106

DESIGN ENGINEER: JASON A. HOYT, P.E.
FL LICENSE NUMBER 101453
DATE:

SCALE: AS NOTED
DESIGN: JAH
DRAWN: EBW
CHECKED: JAH

STORMWATER LS 35
REHABILITATION ELECTRICAL
ONE-LINE DIAGRAM

CITY OF ST. PETE BEACH
PUMP & LIFT STATION
REHABILITATIONS
PID# PS26-401-608-00
FLORIDA
PINELLAS COUNY

DATE:
DECEMBER 2025

PROJECT NO.
148404108

SHEET NUMBER
E-21

GENERAL NOTES:

1. INSTALL CONDUITS AND CONDUCTORS FOR SERVICE AND EQUIPMENT GROUND AS REUQIRED BY APPLICABLE CODES AND SPECIFICATIONS.
2. REUSE EXISTING CONDUIT TO THE FULLEST EXTENT POSSIBLE.
3. CONDUITS SHOWN ARE REPRESENTATIVE ONLY. CONTRACTOR SHALL DETERMINE CONDUIT LOCATION AND ROUTING.
4. SEE ONE-LINE DIAGRAMS FOR ADDITIONAL CONDUIT AND WIRING.

KEY NOTES:

1 REPLACE EXISTING PUMP CONTROL PANEL. SEE SHEETS E-26 THROUGH E-29 FOR PUMP CONTROL PANEL LAYOUT AND WIRING DIAGRAMS.

2 CITY PROVIDED AND INSTALLED SCADA PANEL AND ANTENNA. COORDINATE REPLACEMENT WITH THE CITY.

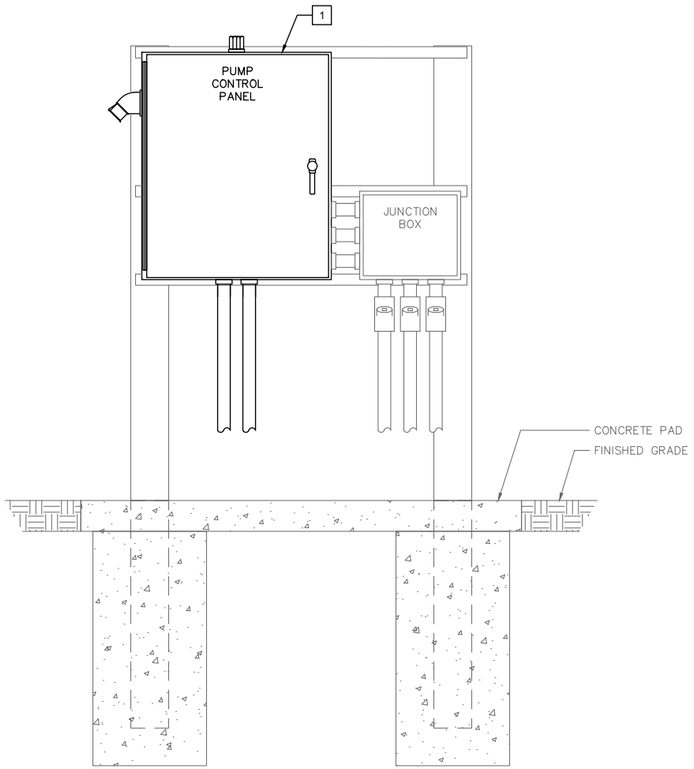

A ELECTRICAL EQUIPMENT RACK – ATL FRONT ELEVATION
SCALE: NO SCALE

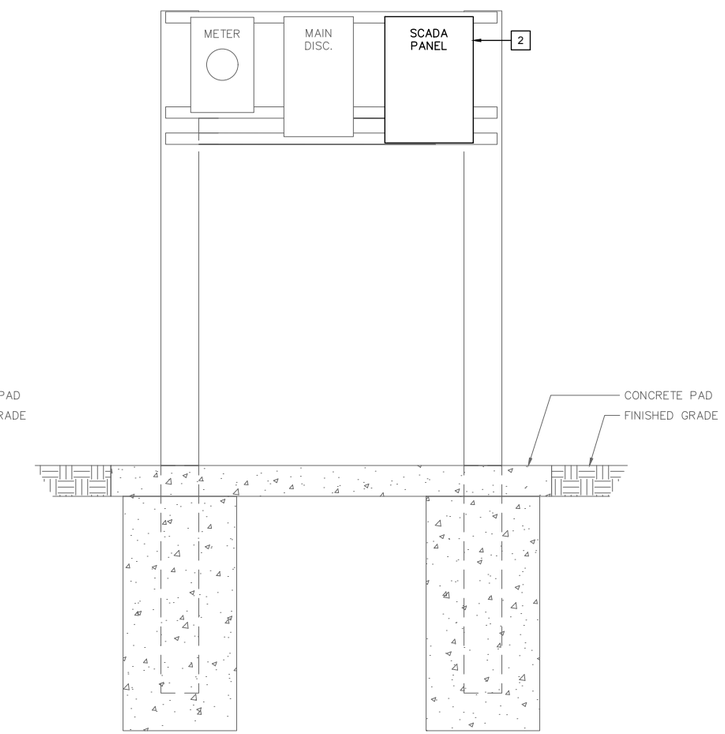

B ELECTRICAL EQUIPMENT RACK – ATL REAR ELEVATION
SCALE: NO SCALE

© 2025 KIMLEY-HORN AND ASSOCIATES, INC.
Kimley»Horn
200 CENTRAL AVENUE, SUITE 600
ST. PETERSBURG, FL 33701
P: 727 547 3999
WWW.KIMLEY-HORN.COM REGISTRY NO. 35106

No.	Revisions	Date	By

DESIGN ENGINEER:
JASON A. HOYT, P.E.
FL LICENSE NUMBER
101453
DATE:

SCALE: AS NOTED
DESIGN: JAH
DRAWN: EBW
CHECKED: JAH

ELECTRICAL EQUIPMENT RACK - ATL

CITY OF ST. PETE BEACH
PUMP & LIFT STATION REHABILITATIONS
PID# PS26-401-608-00
PINELLAS COUNY FLORIDA

DATE:
DECEMBER 2025

PROJECT NO.
148404108

SHEET NUMBER
E-22

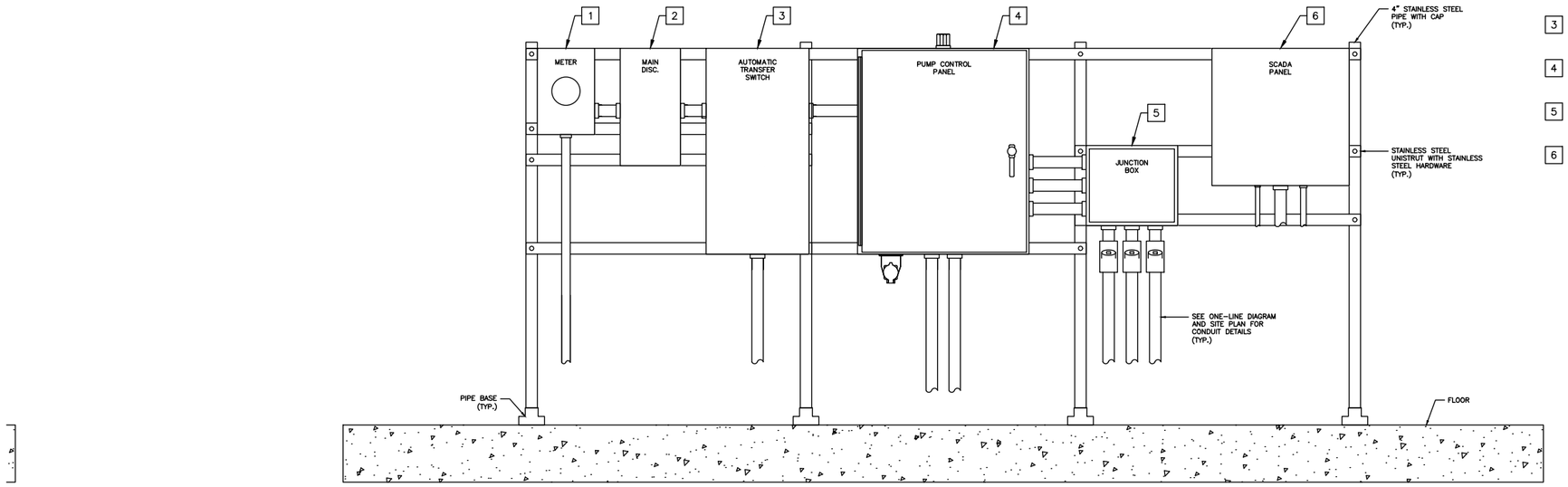

A ELEVATED ELECTRICAL EQUIPMENT RACK ELEVATION - ATL

SCALE: NO SCALE

GENERAL NOTES:

1. INSTALL CONDUITS AND CONDUCTORS FOR SERVICE AND EQUIPMENT GROUND AS REQUIRED BY APPLICABLE CODES AND SPECIFICATIONS.
2. REUSE EXISTING CONDUIT TO THE FULLEST EXTENT POSSIBLE.
3. CONDUITS SHOWN ARE REPRESENTATIVE ONLY. CONTRACTOR SHALL DETERMINE CONDUIT LOCATION AND ROUTING.
4. SEE ONE-LINE DIAGRAMS FOR ADDITIONAL CONDUIT AND WIRING.

KEY NOTES:

1. ELECTRIC METER IN ALUMINUM ENCLOSURE. COORDINATE ELECTRIC METER INSTALLATION WITH ALL UTILITY REQUIREMENTS.
2. HEAVY DUTY, PAD-LOCKABLE, 200A-240V-3P NEMA 4X STAINLESS STEEL FUSIBLE DISCONNECT, SERVICE ENTRANCE RATED. FUSES SHALL BE 240V, 125A, DUAL-ELEMENT, TIME-DELAY RK5 FUSES.
3. ASCO 300 SERIES 150A-240V-3P NEMA 4X STAINLESS STEEL AUTOMATIC TRANSFER SWITCH.
4. SEE SHEETS E-26 THROUGH E-29 FOR PUMP CONTROL PANEL LAYOUT AND WIRING DIAGRAMS.
5. PROVIDE TERMINALS AS REQUIRED IN JUNCTION BOX FOR PUMP CABLES AND FLOAT SWITCH CABLES.
6. CITY PROVIDED AND INSTALLED SCADA PANEL AND ANTENNA. COORDINATE REPLACEMENT WITH THE CITY.

No.	Revisions	Date	By

Kimley»Horn
© 2025 KIMLEY-HORN AND ASSOCIATES, INC.
200 CENTRAL AVENUE, SUITE 600
ST. PETERSBURG, FL 33701
P: 727 547 3999
WWW.KIMLEY-HORN.COM REGISTRY NO. 35106

DESIGN ENGINEER:
JASON A. HOYT, P.E.
FL LICENSE NUMBER
101453
DATE:

SCALE: AS NOTED
DESIGN: JAH
DRAWN: EBW
CHECKED: JAH

ELEVATED ELECTRICAL EQUIPMENT RACK - ATL

CITY OF ST. PETE BEACH
PUMP & LIFT STATION REHABILITATIONS
PID# PS26-401-608-00
PINELLAS COUNY FLORIDA

DATE:
DECEMBER 2025

PROJECT NO.
148404108

SHEET NUMBER
E-23

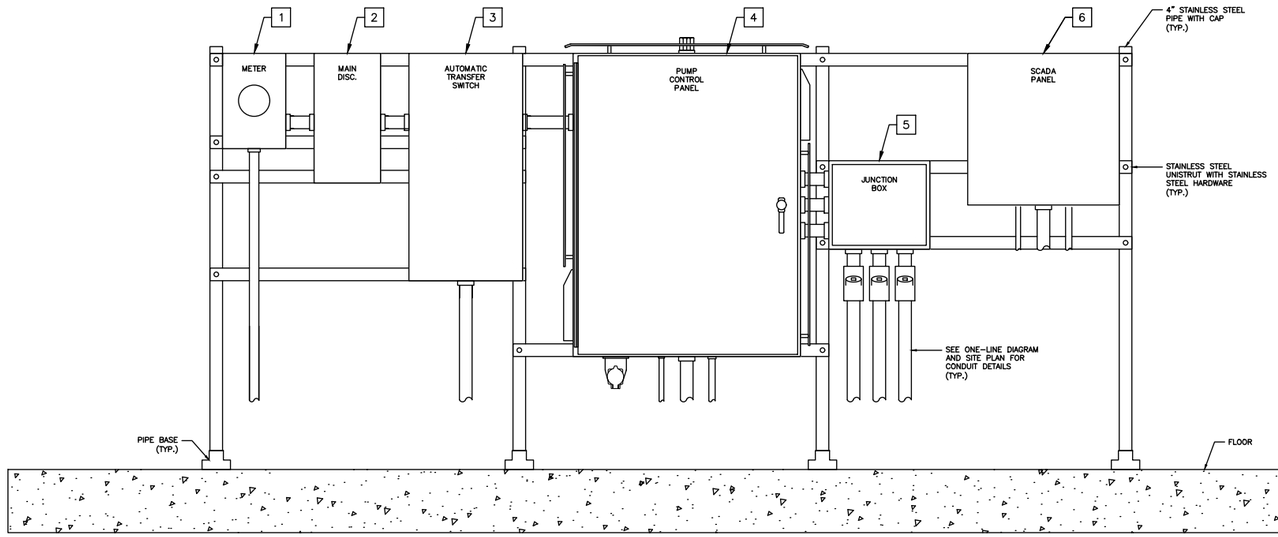

A ELEVATED ELECTRICAL EQUIPMENT RACK ELEVATION - VFD

SCALE: NO SCALE

GENERAL NOTES:

1. INSTALL CONDUITS AND CONDUCTORS FOR SERVICE AND EQUIPMENT GROUND AS REUQIRED BY APPLICABLE CODES AND SPECIFICATIONS.
2. REUSE EXISTING CONDUIT TO THE FULLEST EXTENT POSSIBLE.
3. CONDUITS SHOWN ARE REPRESENTATIVE ONLY. CONTRACTOR SHALL DETERMINE CONDUIT LOCATION AND ROUTING.
4. SEE ONE-LINE DIAGRAM ON SHEET E-05 FOR ADDITIONAL CONDUIT AND WIRING.

KEY NOTES:

1. ELECTRIC METER IN ALUMINUM ENCLOSURE. COORDINATE ELECTRIC METER INSTALLATION WITH ALL UTILITY REQUIREMENTS.
2. HEAVY DUTY, PAD-LOCKABLE, 200A-240V-3P NEMA 4X STAINLESS STEEL FUSIBLE DISCONNECT, SERVICE ENTRANCE RATED. FUSES SHALL BE 240V, 125A, DUAL-ELEMENT, TIME-DELAY RK5 FUSES.
3. ASCO 300 SERIES 150A-240V-3P NEMA 4X STAINLESS STEEL AUTOMATIC TRANSFER SWITCH.
4. SEE SHEETS E-30 THROUGH E-34 FOR PUMP CONTROL PANEL LAYOUT AND WIRING DIAGRAMS.
5. PROVIDE TERMINALS AS REQUIRED IN JUNCTION BOX FOR PUMP CABLES AND FLOAT SWITCH CABLES.
6. CITY PROVIDED AND INSTALLED SCADA PANEL AND ANTENNA. COORDINATE REPLACEMENT WITH THE CITY.

No.	Revisions	Date	By

Kimley»Horn
© 2025 KIMLEY-HORN AND ASSOCIATES, INC.
200 CENTRAL AVENUE, SUITE 600
ST. PETERSBURG, FL 33701
P: 727 547 3999
WWW.KIMLEY-HORN.COM REGISTRY NO. 35106

DESIGN ENGINEER: JASON A. HOYT, P.E.
FL LICENSE NUMBER 101453
DATE:

SCALE: AS NOTED
DESIGN: JAH
DRAWN: EBW
CHECKED: JAH

ELEVATED ELECTRICAL EQUIPMENT RACK - VFD

CITY OF ST. PETE BEACH
PUMP & LIFT STATION REHABILITATIONS
PID# PS26-401-608-00
PINELLAS COUNY FLORIDA

DATE: DECEMBER 2025

PROJECT NO. 148404108

SHEET NUMBER E-24

GENERAL NOTES:

1. INSTALL CONDUITS AND CONDUCTORS FOR SERVICE AND EQUIPMENT GROUND AS REUQIRED BY APPLICABLE CODES AND SPECIFICATIONS.
2. REUSE EXISTING CONDUIT TO THE FULLEST EXTENT POSSIBLE.
3. CONDUITS SHOWN ARE REPRESENTATIVE ONLY. CONTRACTOR SHALL DETERMINE CONDUIT LOCATION AND ROUTING.
4. SEE ONE-LINE DIAGRAM ON SHEET E-17 FOR ADDITIONAL CONDUIT AND WIRING.

KEY NOTES:

1 REPLACE EXISTING PUMP CONTROL PANEL. SEE SHEETS E-35 THROUGH E-39 FOR PUMP CONTROL PANEL LAYOUT AND WIRING DIAGRAMS.

2 CITY PROVIDED AND INSTALLED SCADA PANEL AND ANTENNA. COORDINATE REPLACEMENT WITH THE CITY.

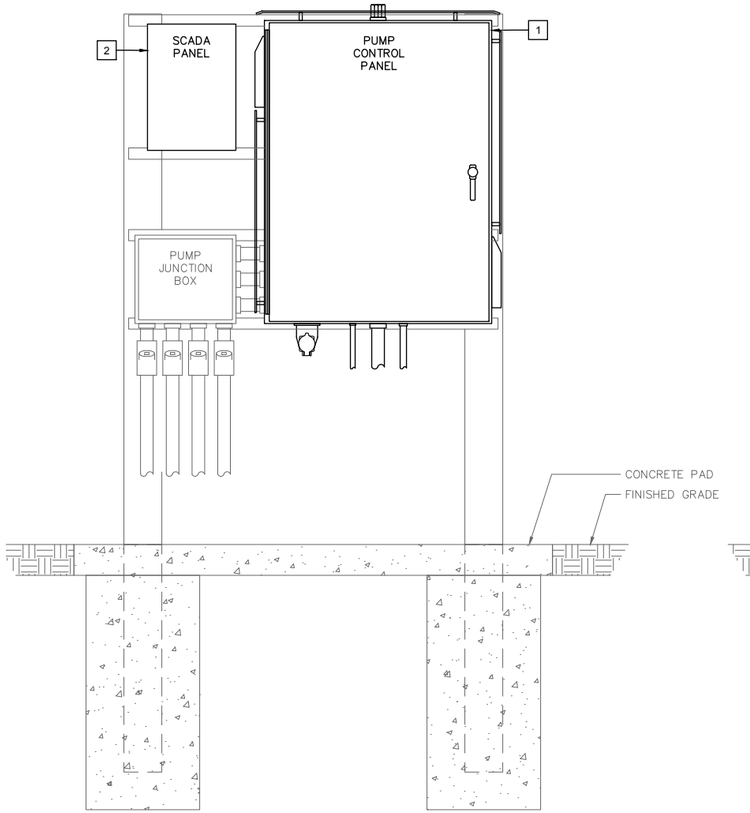

A ELECTRICAL EQUIPMENT RACK – RVSS FRONT ELEVATION
SCALE: NO SCALE

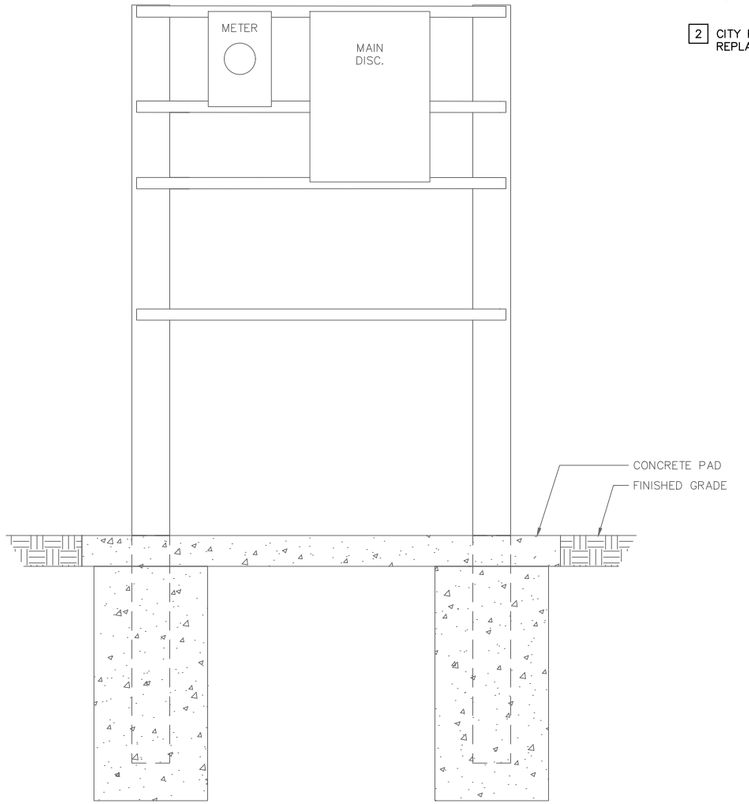

B ELECTRICAL EQUIPMENT RACK – RVSS REAR ELEVATION
SCALE: NO SCALE

No.	Revisions	Date	By

Kimley»Horn

© 2025 KIMLEY-HORN AND ASSOCIATES, INC.
200 CENTRAL AVENUE, SUITE 600
ST. PETERSBURG, FL 33701
P: 727 547 3999
WWW.KIMLEY-HORN.COM REGISTRY NO. 35106

DESIGN ENGINEER: JASON A. HOYT, P.E.
FL LICENSE NUMBER 101453
DATE:

SCALE: AS NOTED
DESIGN: JAH
DRAWN: EBW
CHECKED: JAH

ELECTRICAL EQUIPMENT RACK - RVSS

CITY OF ST. PETE BEACH
PUMP & LIFT STATION REHABILITATIONS
PID# PS26-401-608-00
PINELLAS COUNY FLORIDA

DATE: DECEMBER 2025

PROJECT NO. 148404108

SHEET NUMBER E-25

GENERAL NOTES:

1. PROVIDE GENERATOR AUXILIARY POWER RECEPTACLE AND SITE LIGHT WIRING ONLY FOR LIFT STATION 4.

KEY NOTES:

[1] PROVIDE 36" X 30" X 12", 316 STAINLESS STEEL ENCLOSURE WITH PAD-LOCKABLE 3-POINT LATCH.

[2] PROVIDE NEMA 4X RED ALARM LIGHT.

[3] PROVIDE EMERGENCY GENERATOR RECEPTACLE. COORDINATE REQUIREMENTS WITH THE CITY. GENERATOR RECEPTACLE SHALL BE INSTALLED OPPOSITE OF JUNCTION BOX; UNLESS ON ELEVATED PLATFORM, THEN SHALL BE INSTALLED ON THE BOTTOM OF THE PUMP CONTROL PANEL.

[4] PROVIDE SWING-OUT PANEL AND DOOR STOP KIT.

[5] ALL CIRCUIT BREAKERS SHALL BE ACCESSIBLE THROUGH THE SWING-OUT.

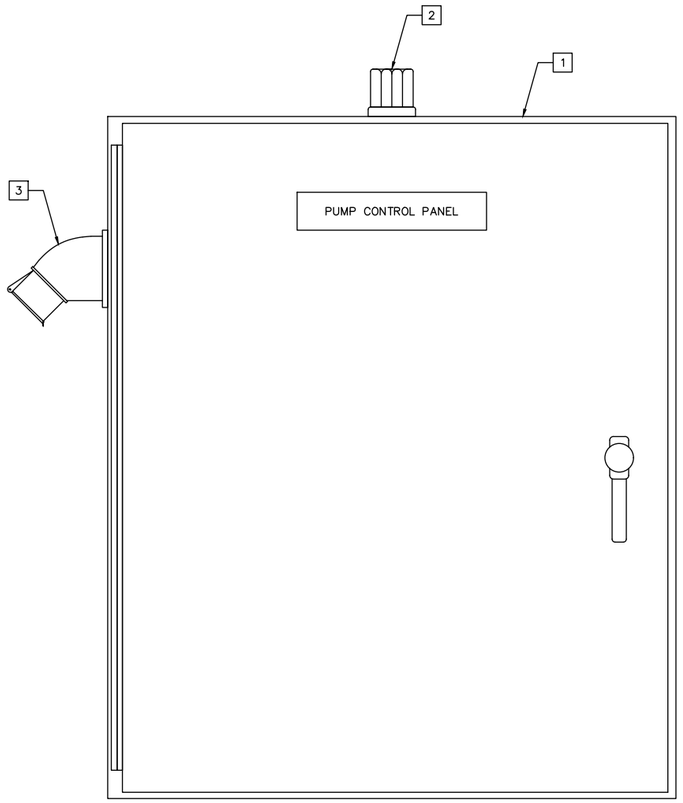

A PUMP CONTROL PANEL PANEL LAYOUT
SCALE: NO SCALE

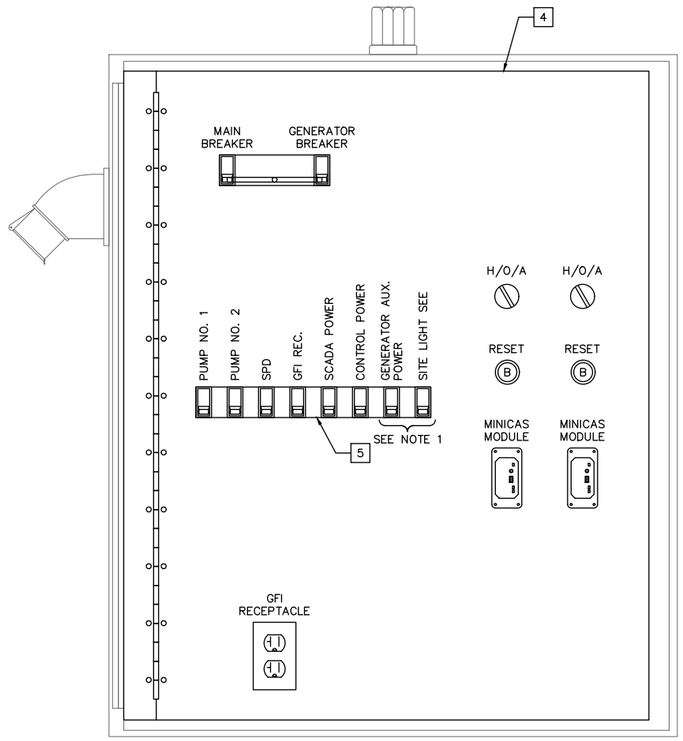

B PUMP CONTROL PANEL SWING-OUT LAYOUT
SCALE: NO SCALE

No.	Revisions	Date	By

Kimley»Horn

© 2025 KIMLEY-HORN AND ASSOCIATES, INC.
200 CENTRAL AVENUE, SUITE 600
ST. PETERSBURG, FL 33701
P: 727 547 3999
WWW.KIMLEY-HORN.COM REGISTRY NO. 35106

DESIGN ENGINEER:
JASON A. HOYT, P.E.
FL LICENSE NUMBER
101453
DATE:

SCALE: AS NOTED
DESIGN: JAH
DRAWN: EBW
CHECKED: JAH

PUMP CONTROL PANEL LAYOUT - ATL

CITY OF ST. PETE BEACH
PUMP & LIFT STATION REHABILITATIONS
PID# PS26-401-608-00
PINELLAS COUNY FLORIDA

DATE:
DECEMBER 2025

PROJECT NO.
148404108

SHEET NUMBER
E-26

GENERAL NOTES:

1. OVERLOAD RELAYS SHALL BE ELECTRONIC TYPE, CAPABLE OF BEING RESET USING A REMOTE DRY CONTACT.

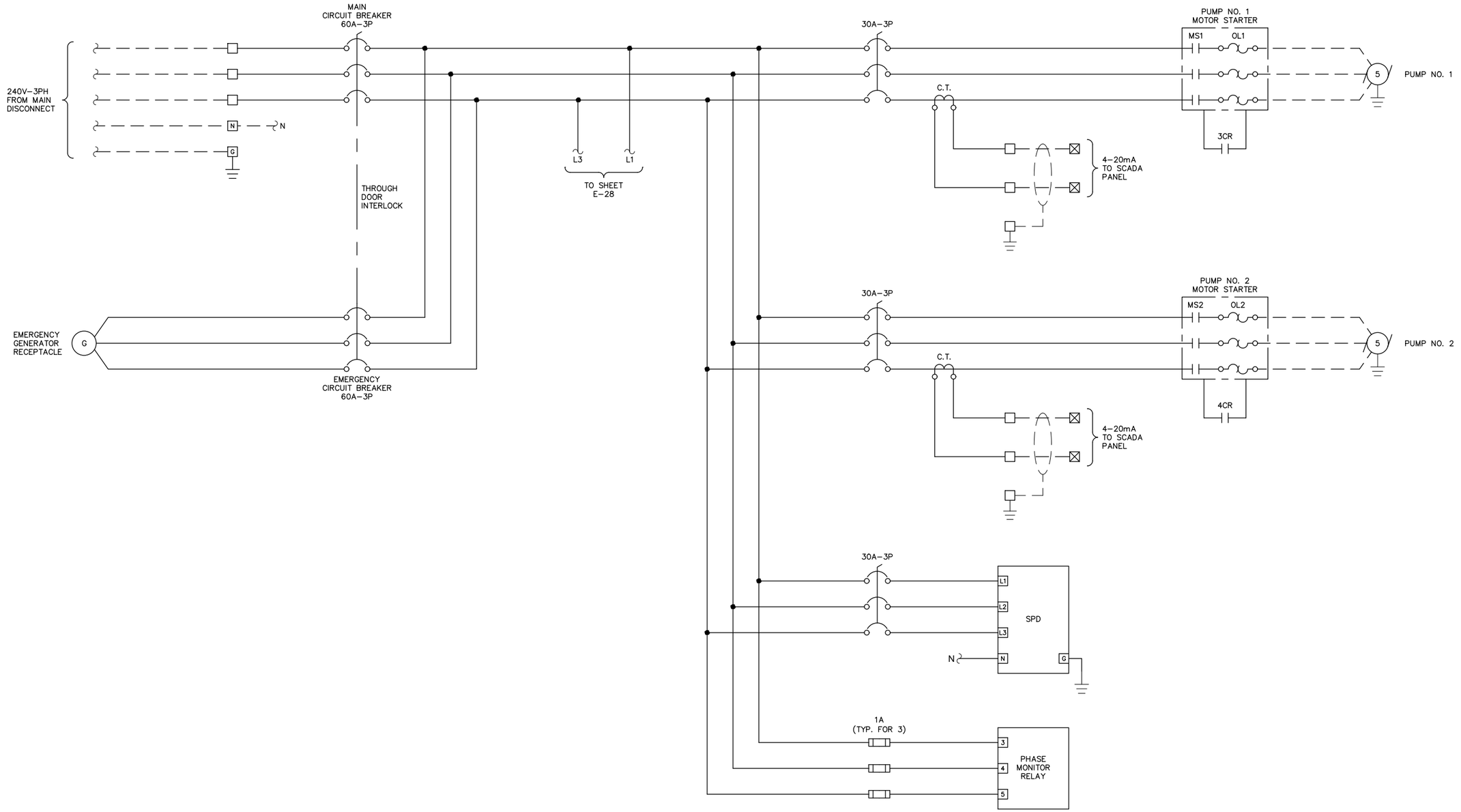

No.	Revisions	Date	By

Kimley»Horn

© 2025 KIMLEY-HORN AND ASSOCIATES, INC.

200 CENTRAL AVENUE, SUITE 600
ST. PETERSBURG, FL 33701
P: 727 547 3999
WWW.KIMLEY-HORN.COM REGISTRY NO. 35106

DESIGN ENGINEER:
JASON A. HOYT, P.E.
FL LICENSE NUMBER
101453
DATE:

SCALE:	AS NOTED	DESIGNED:	JAH	DRAWN:	EBW	CHECKED:	JAH

PUMP CONTROL PANEL WIRING
DIAGRAM - ATL

CITY OF ST. PETE BEACH
PUMP & LIFT STATION
REHABILITATIONS
PID# PS26-401-608-00

PINELLAS COUNTY FLORIDA

DATE:
DECEMBER 2025

PROJECT NO.
148404108

SHEET NUMBER
E-27

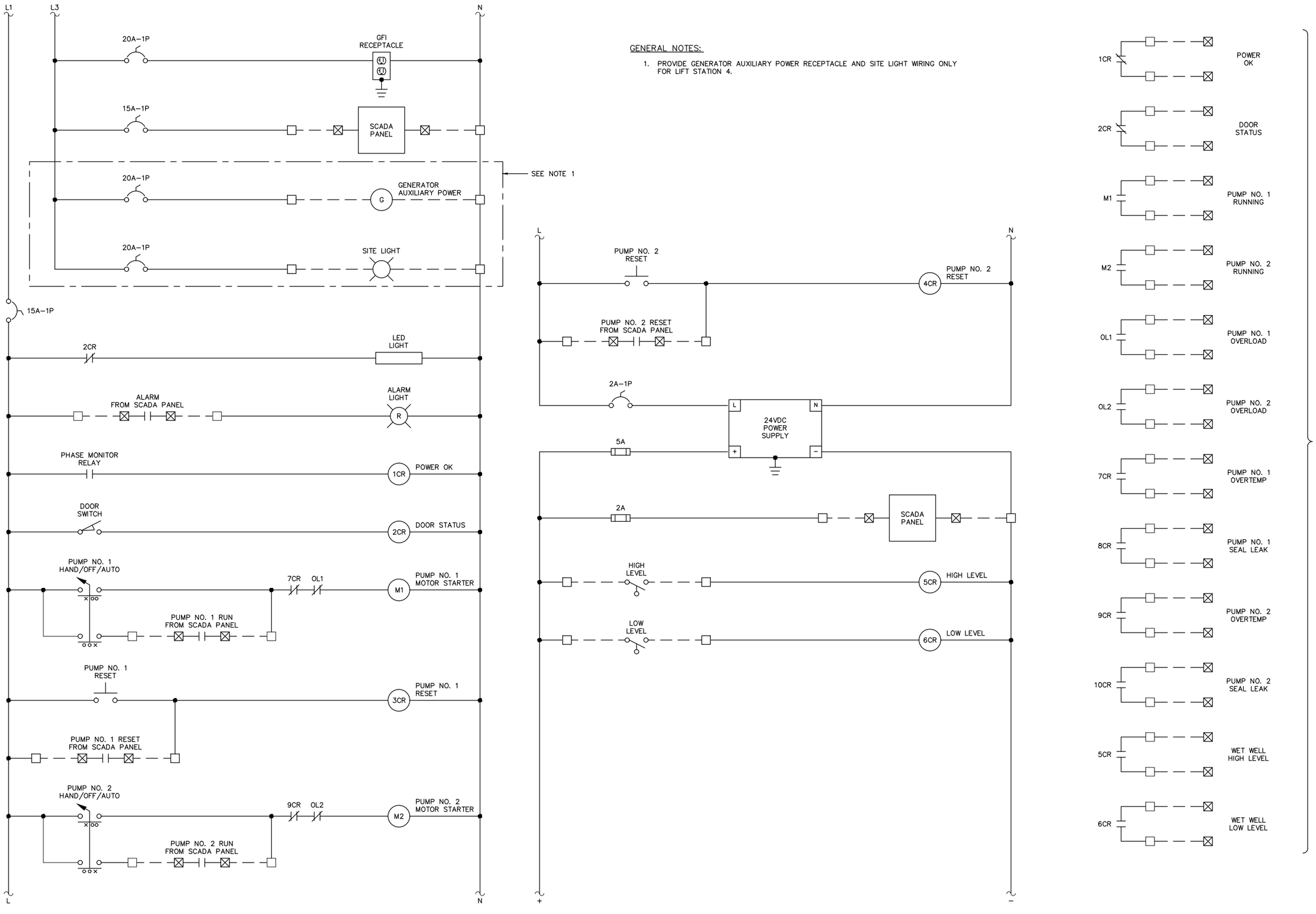

GENERAL NOTES:

1. PROVIDE GENERATOR AUXILIARY POWER RECEPTACLE AND SITE LIGHT WIRING ONLY FOR LIFT STATION 4.

No.	Revisions	Date	By

Kimley»Horn

© 2025 KIMLEY-HORN AND ASSOCIATES, INC.

200 CENTRAL AVENUE, SUITE 600
ST. PETERSBURG, FL 33701
P: 727 547 3999
WWW.KIMLEY-HORN.COM REGISTRY NO. 35106

DESIGN ENGINEER: JASON A. HOYT, P.E.
FL LICENSE NUMBER 101453
DATE:

SCALE: AS NOTED
DESIGN: JAH
DRAWN: EBW
CHECKED: JAH

PUMP CONTROL PANEL WIRING DIAGRAM - ATL

CITY OF ST. PETE BEACH
PUMP & LIFT STATION REHABILITATIONS
PID# PS26-401-608-00

FLORIDA
PINELLAS COUNY

DATE: DECEMBER 2025

PROJECT NO. 148404108

SHEET NUMBER E-28

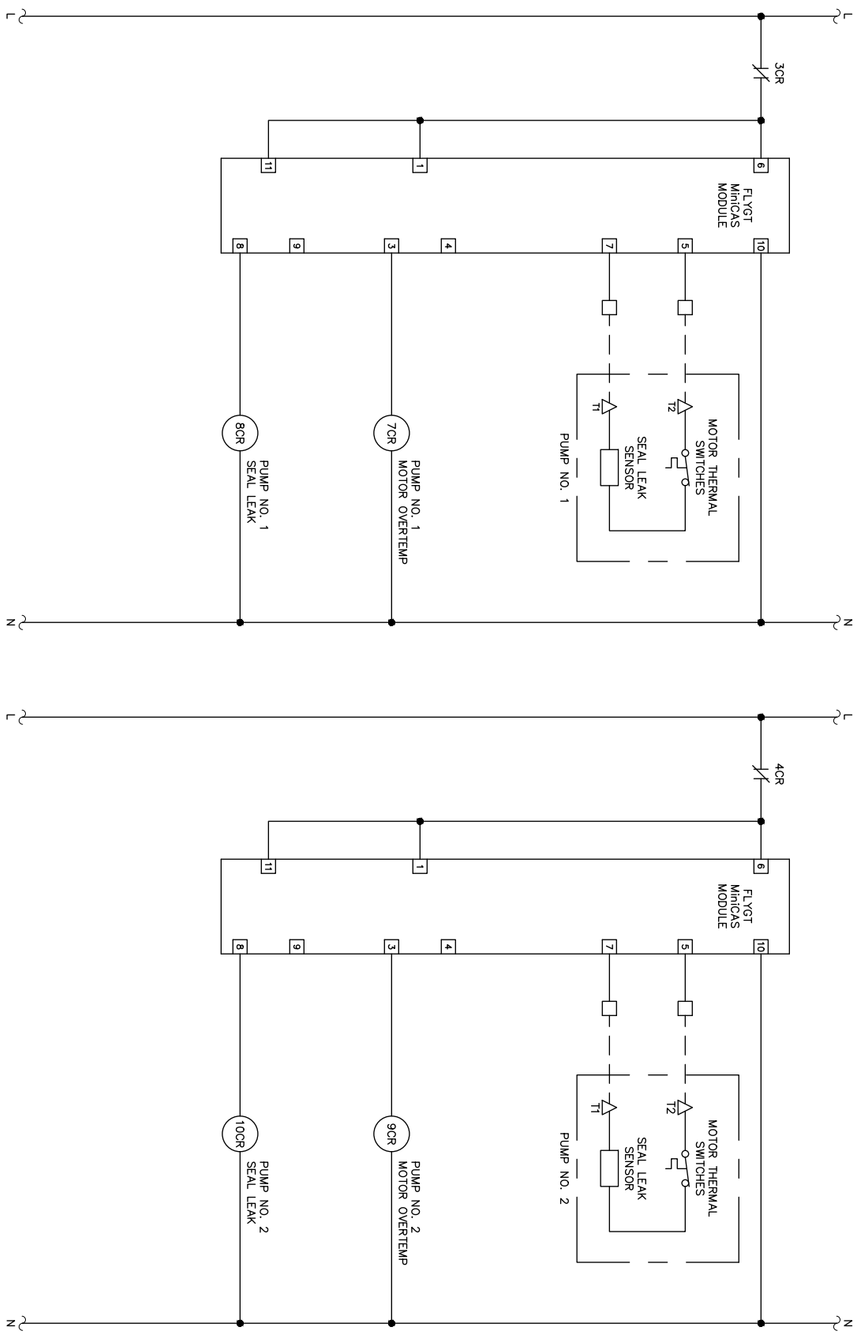

SHEET NUMBER: E-29	PROJECT NO.: 148404108	DATE: DECEMBER 2025	CITY OF ST. PETE BEACH PUMP & LIFT STATION REHABILITATIONS PID# PS26-401-608-00 PINELLAS COUNY FLORIDA	PUMP CONTROL PANEL WIRING DIAGRAM - ATL	SCALE: AS NOTED DESIGN: JAH DRAWN: EBW CHECKED: JAH	DESIGN ENGINEER: JASON A. HOYT, P.E. FL LICENSE NUMBER 101453 DATE:	Kimley»Horn © 2025 KIMLEY-HORN AND ASSOCIATES, INC. 200 CENTRAL AVENUE, SUITE 600 ST. PETERSBURG, FL 33701 P: 727 547 3999 WWW.KIMLEY-HORN.COM REGISTRY NO. 35106

No.	Revisions	Date	By

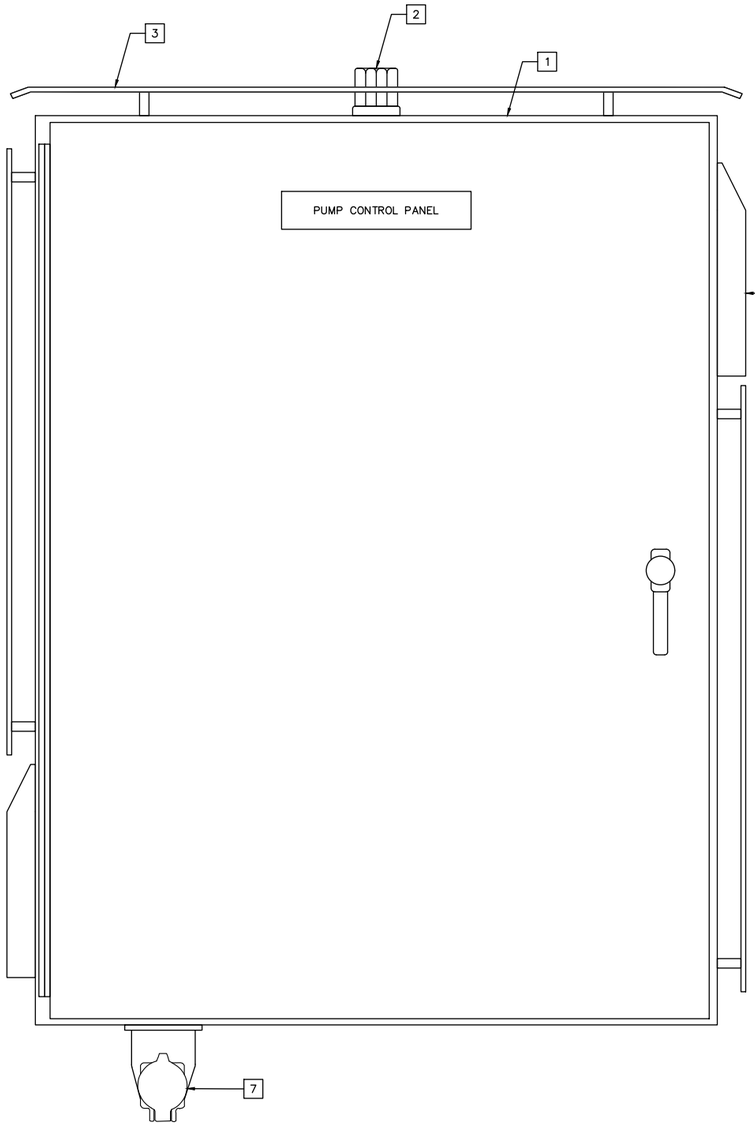

PUMP CONTROL PANEL
PANEL LAYOUT
A
SCALE: NO SCALE

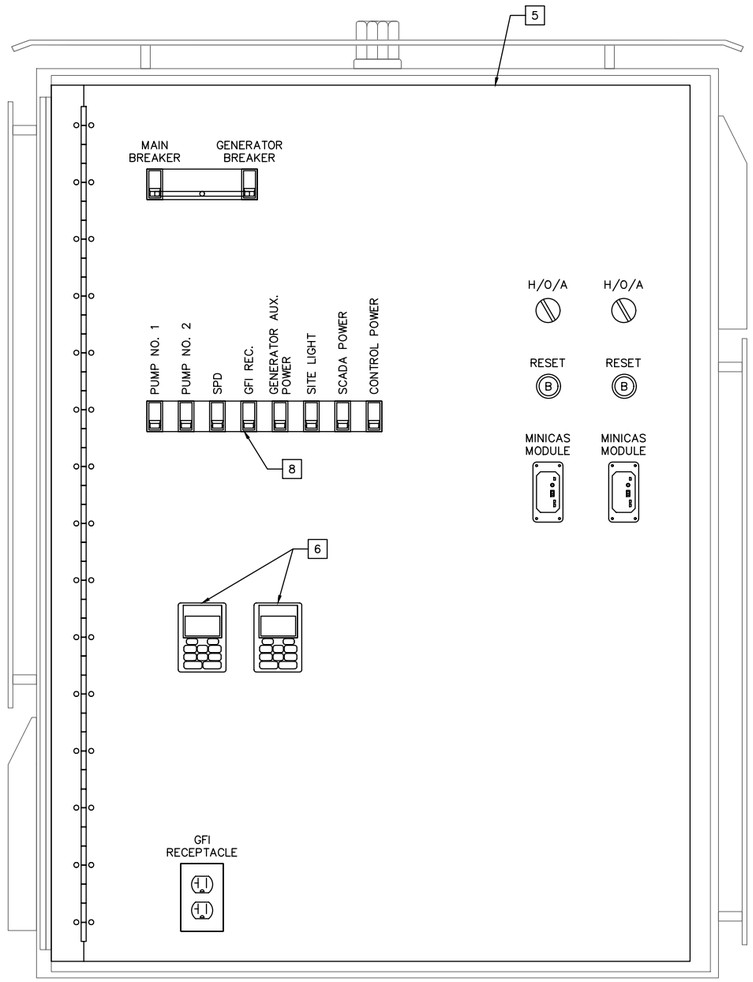

PUMP CONTROL PANEL
SWING-OUT LAYOUT
B
SCALE: NO SCALE

KEY NOTES:

1. PROVIDE 48" X 36" X 12", 316 STAINLESS STEEL ENCLOSURE WITH PAD-LOCKABLE 3-POINT LATCH.
2. PROVIDE NEMA 4X RED ALARM LIGHT.
3. PROVIDE STAINLESS STEEL SUN-SHIELDS ON THE TOP AND SIDES OF THE ENCLOSURE. ATTACH SUN-SHIELDS WITH STAINLESS STEEL HARDWARE.
4. PROVIDE ENCLOSURE COOLING FANS WITH STAINLESS STEEL SHROUDS. SIZE ENCLOSURE COOLING FANS TO ADEQUATELY DISSIPATE HEAT.
5. PROVIDE SWING-OUT PANEL AND DOOR STOP KIT.
6. PROVIDE VARIABLE FREQUENCY DRIVE REMOTE KEYPAD.
7. PROVIDE EMERGENCY GENERATOR RECEPTACLE. COORDINATE REQUIREMENTS WITH THE CITY.
8. ALL CIRCUIT BREAKERS SHALL BE ACCESSIBLE THROUGH THE SWING-OUT.

No.	Revisions	Date	By

Kimley»Horn

© 2025 KIMLEY-HORN AND ASSOCIATES, INC.
200 CENTRAL AVENUE, SUITE 600
ST. PETERSBURG, FL 33701
P: 727 547 3999
WWW.KIMLEY-HORN.COM REGISTRY NO. 35106

DESIGN ENGINEER:
JASON A. HOYT, P.E.
FL LICENSE NUMBER
101453
DATE:

SCALE:	AS NOTED	DESIGNED:	JAH	DRAWN:	EBW	CHECKED:	JAH

PUMP CONTROL PANEL LAYOUT - VFD

CITY OF ST. PETE BEACH
PUMP & LIFT STATION REHABILITATIONS
PID# PS26-401-608-00
PINELLAS COUNY FLORIDA

DATE:
DECEMBER 2025

PROJECT NO.
148404108

SHEET NUMBER
E-30

GENERAL NOTES:

1. SEE ONE-LINE DIAGRAMS FOR PUMP AND BREAKER SIZES.

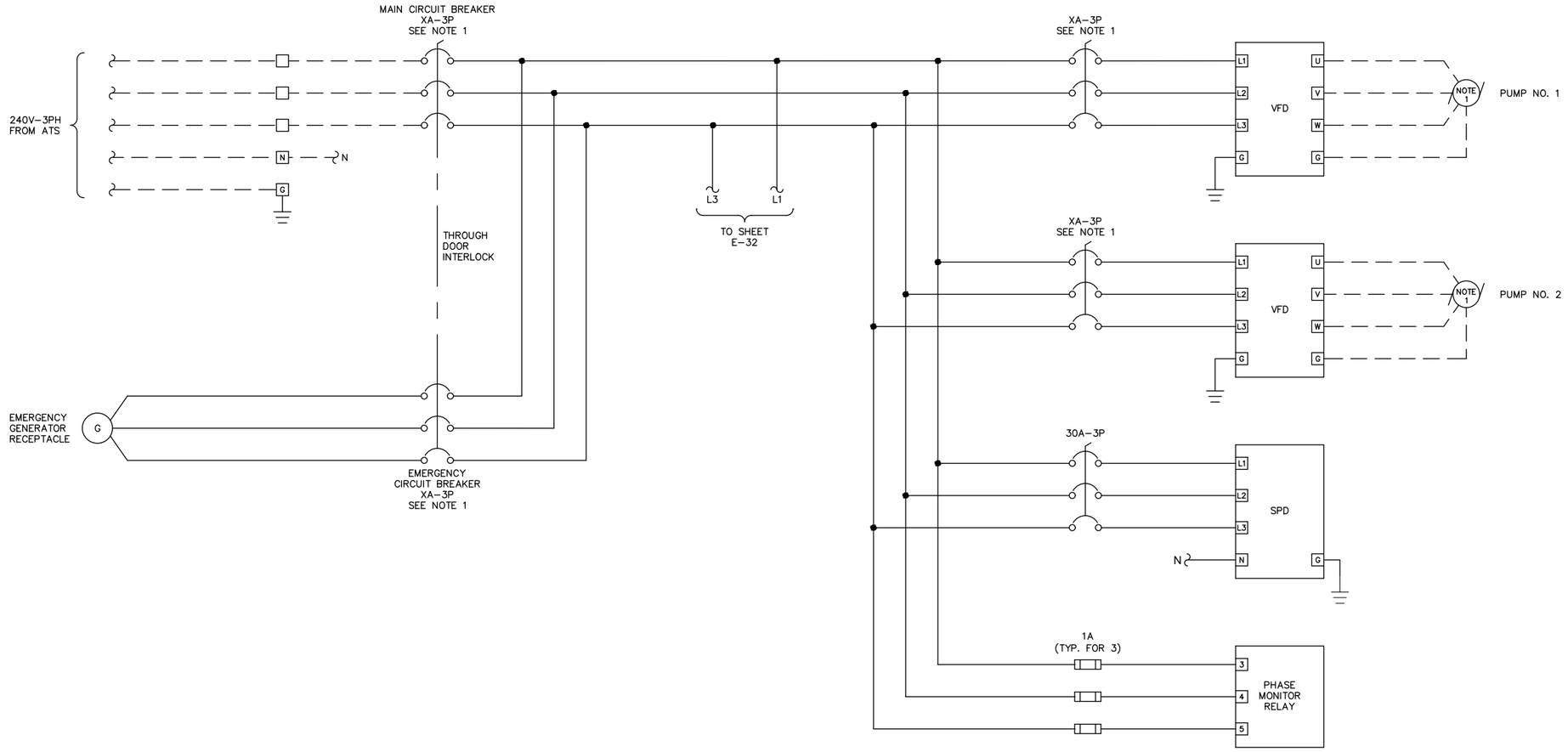

No.	Revisions	Date	By

Kimley»Horn
© 2025 KIMLEY-HORN AND ASSOCIATES, INC.
200 CENTRAL AVENUE, SUITE 600
ST. PETERSBURG, FL 33701
P: 727 547 3999
WWW.KIMLEY-HORN.COM REGISTRY NO. 35106

DESIGN ENGINEER:
JASON A. HOYT, P.E.
FL LICENSE NUMBER
101453
DATE:

SCALE: AS NOTED
DESIGN: JAH
DRAWN: EBW
CHECKED: JAH

PUMP CONTROL PANEL WIRING
DIAGRAM - VFD

CITY OF ST. PETE BEACH
PUMP & LIFT STATION
REHABILITATIONS
PID# PS26-401-608-00
PINELLAS COUNY FLORIDA

DATE:
DECEMBER 2025

PROJECT NO.
148404108

SHEET NUMBER
E-31

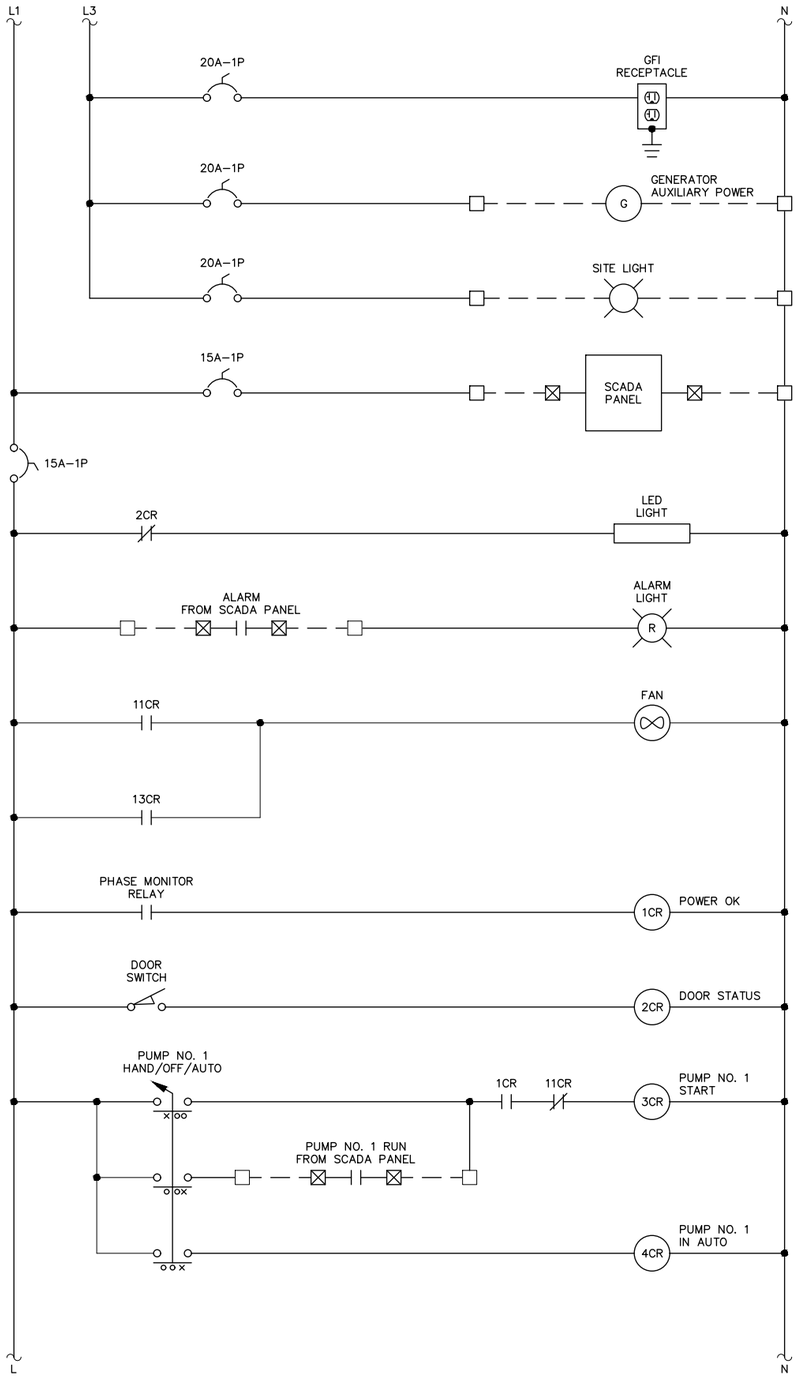

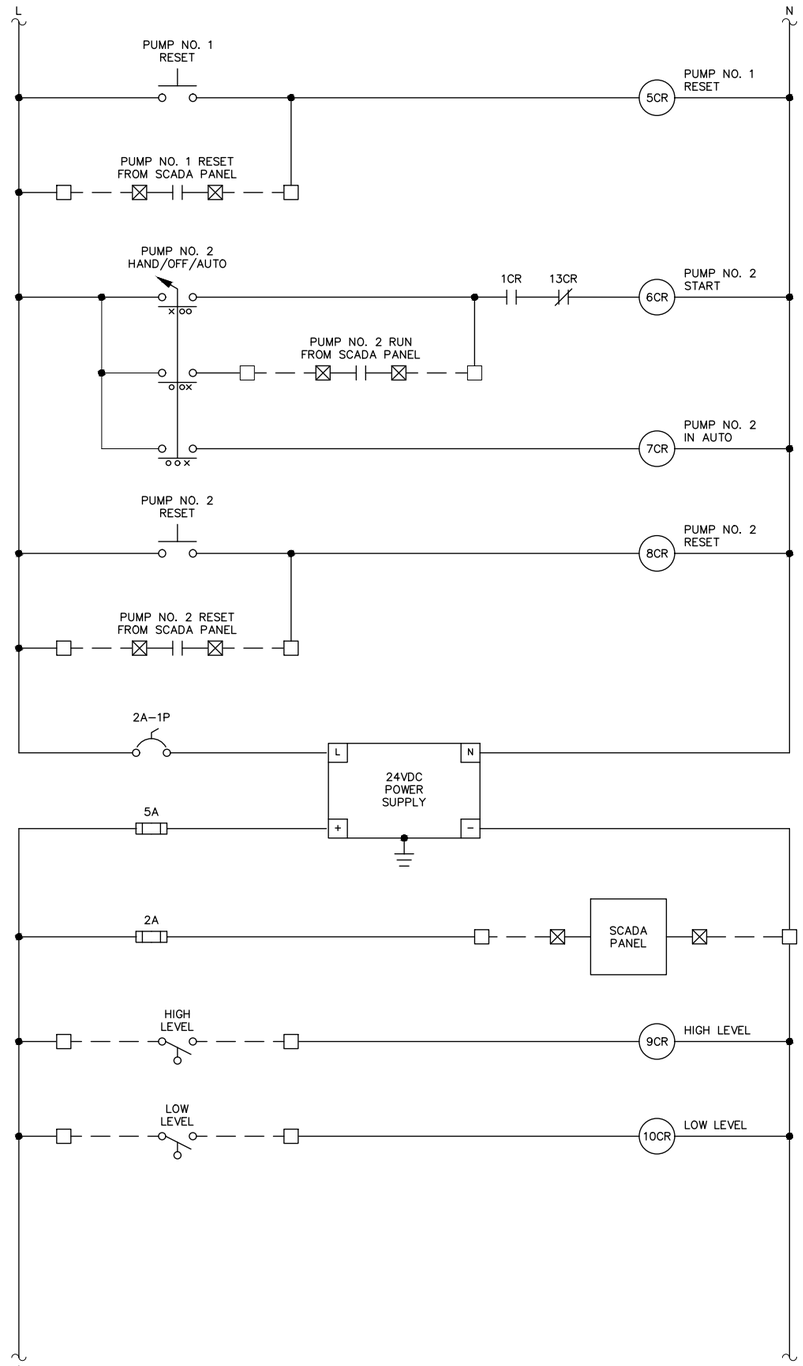

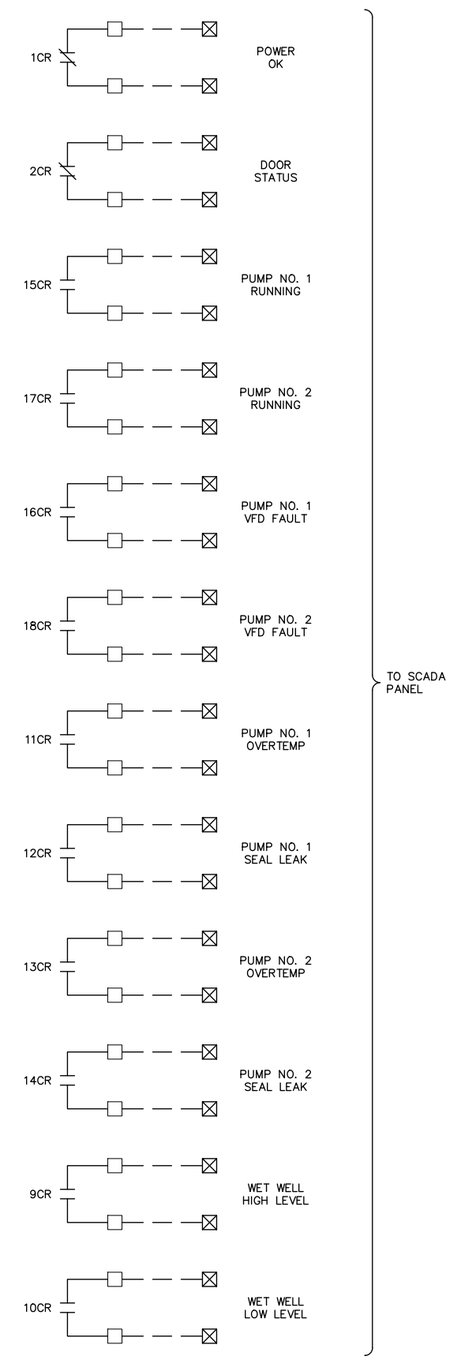

No.	Revisions	Date	By

Kimley»Horn

© 2025 KIMLEY-HORN AND ASSOCIATES, INC.
200 CENTRAL AVENUE, SUITE 600
ST. PETERSBURG, FL 33701
P: 727 547 3999
WWW.KIMLEY-HORN.COM REGISTRY NO. 35106

DESIGN ENGINEER:
JASON A. HOYT, P.E.
FL LICENSE NUMBER
101453
DATE:

SCALE: AS NOTED
DESIGN: JAH
DRAWN: EBW
CHECKED: JAH

PUMP CONTROL PANEL WIRING DIAGRAM - VFD

CITY OF ST. PETE BEACH
PUMP & LIFT STATION REHABILITATIONS
PID# PS26-401-608-00
PINELLAS COUNTY FLORIDA

DATE:
DECEMBER 2025

PROJECT NO.
148404108

SHEET NUMBER
E-32

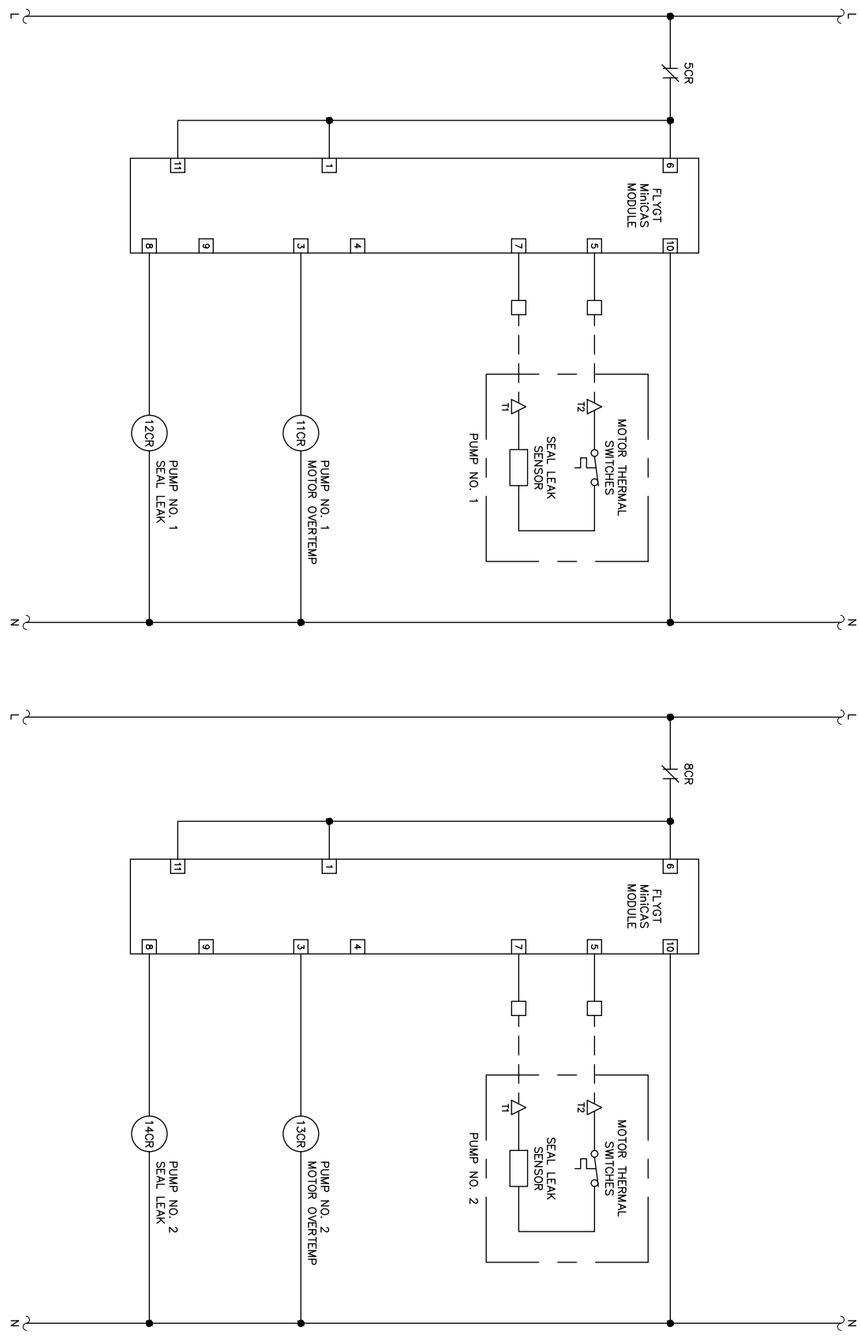

CITY OF ST. PETE BEACH
PUMP & LIFT STATION
REHABILITATIONS
PID# PS26-401-608-00

PINELLAS COUNY FLORIDA

PUMP CONTROL PANEL WIRING
DIAGRAM - VFD

SCALE: AS NOTED
DESIGN: JAH
DRAWN: EBW
CHECKED: JAH

DESIGN ENGINEER:
JASON A. HOYT, P.E.
FL LICENSE NUMBER
101453
DATE:

Kimley»Horn

© 2025 KIMLEY-HORN AND ASSOCIATES, INC.
200 CENTRAL AVENUE, SUITE 600
ST. PETERSBURG, FL 33701
P: 727 547 3999
WWW.KIMLEY-HORN.COM REGISTRY NO. 35106

No.	Revisions	Date	By

DATE: DECEMBER 2025
PROJECT NO. 148404108
SHEET NUMBER E-33

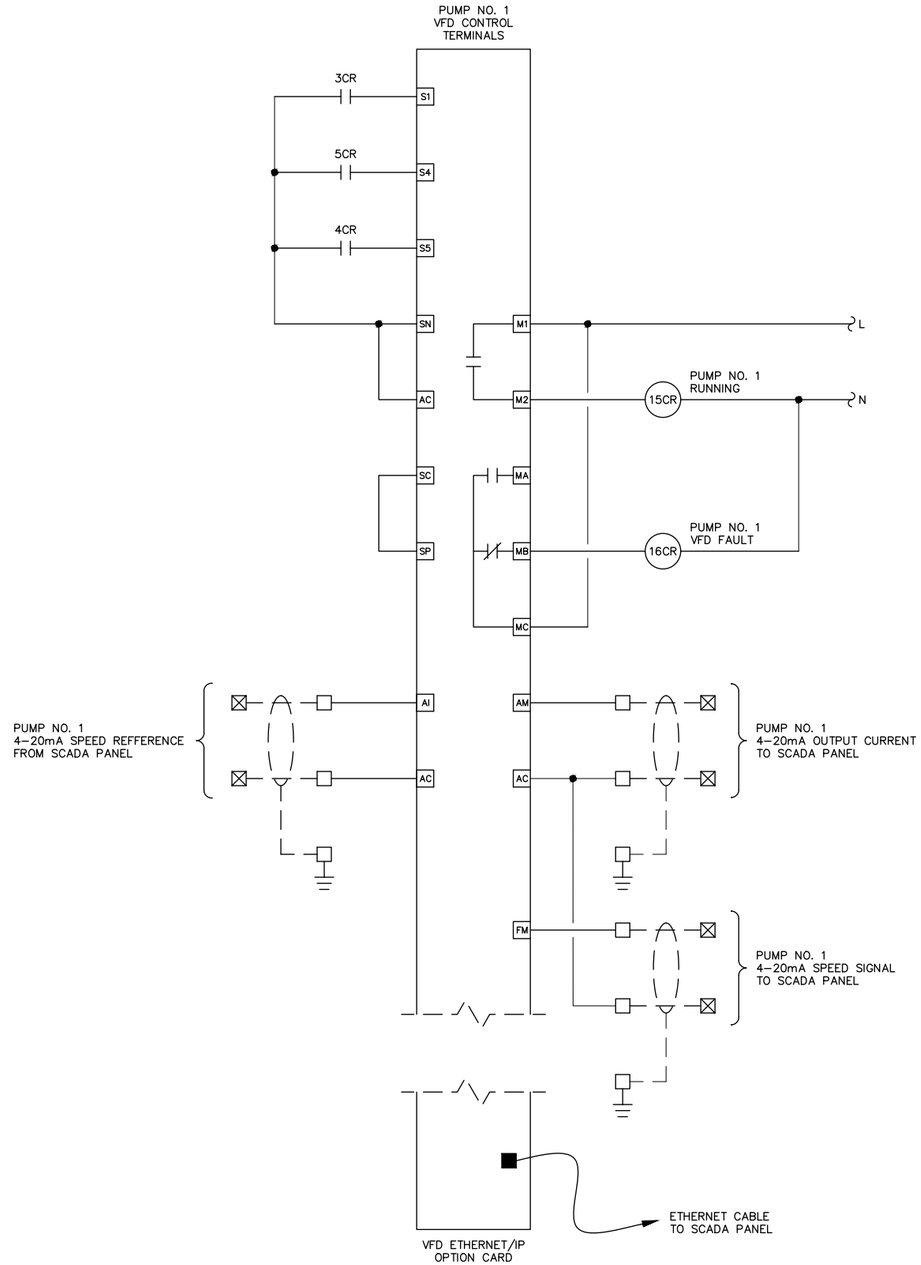

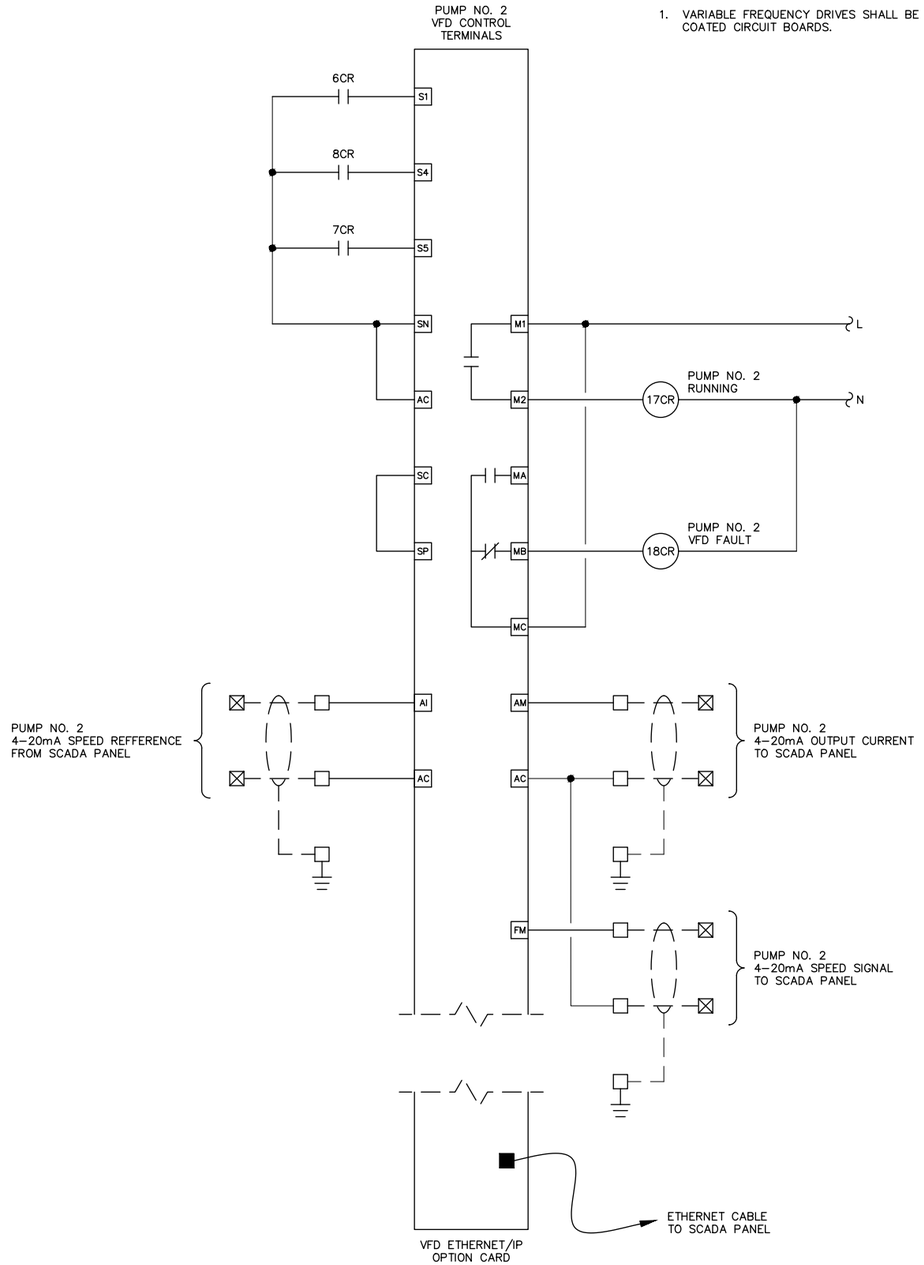

GENERAL NOTES:

1. VARIABLE FREQUENCY DRIVES SHALL BE YASKAWA IQPUMP1000 WITH CONFORMAL COATED CIRCUIT BOARDS.

No.	Revisions	Date	By

Kimley»Horn

© 2025 KIMLEY-HORN AND ASSOCIATES, INC.
200 CENTRAL AVENUE, SUITE 600
ST. PETERSBURG, FL 33701
P: 727 547 3999
WWW.KIMLEY-HORN.COM REGISTRY NO. 35106

DESIGN ENGINEER:
JASON A. HOYT, P.E.
FL LICENSE NUMBER
101453
DATE:

SCALE: AS NOTED
DESIGN: JAH
DRAWN: EBW
CHECKED: JAH

PUMP CONTROL PANEL WIRING
DIAGRAM - VFD

CITY OF ST. PETE BEACH
PUMP & LIFT STATION
REHABILITATIONS
PID# PS26-401-608-00
PINELLAS COUNY
FLORIDA

DATE:
DECEMBER 2025

PROJECT NO.
148404108

SHEET NUMBER
E-34

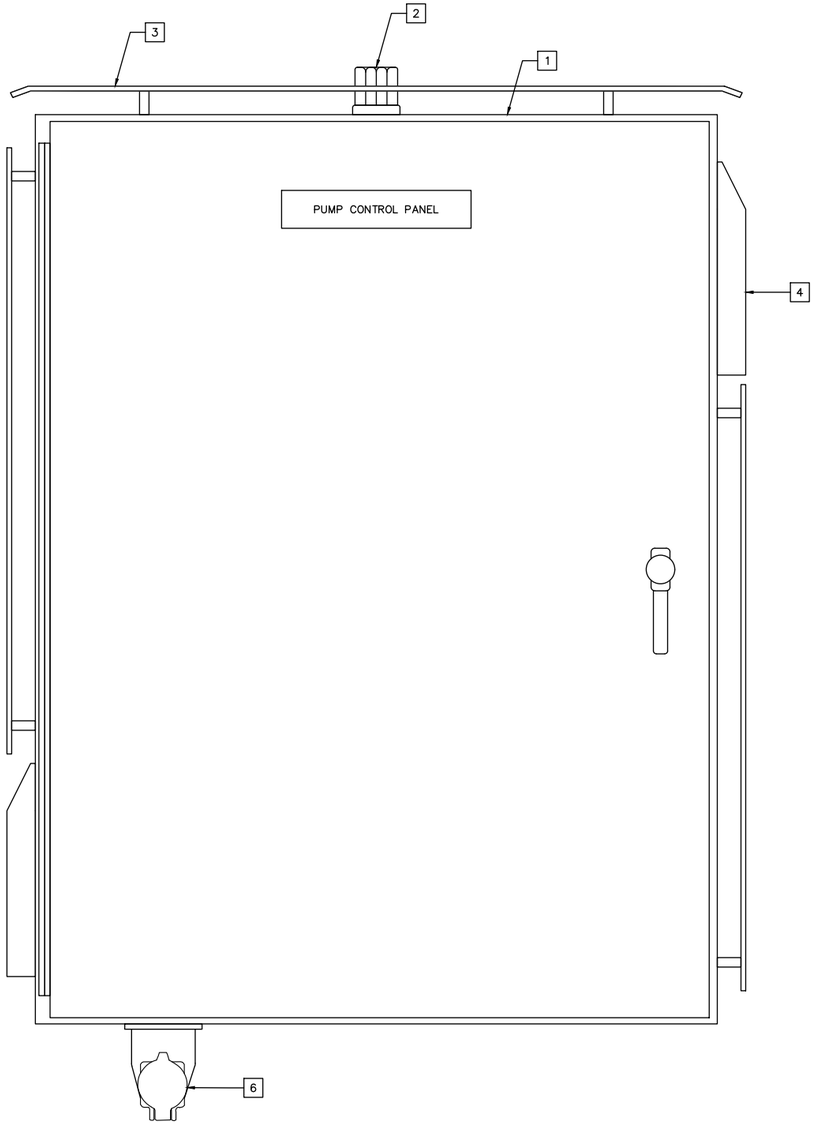

PUMP CONTROL PANEL
PANEL LAYOUT
A
SCALE: NO SCALE

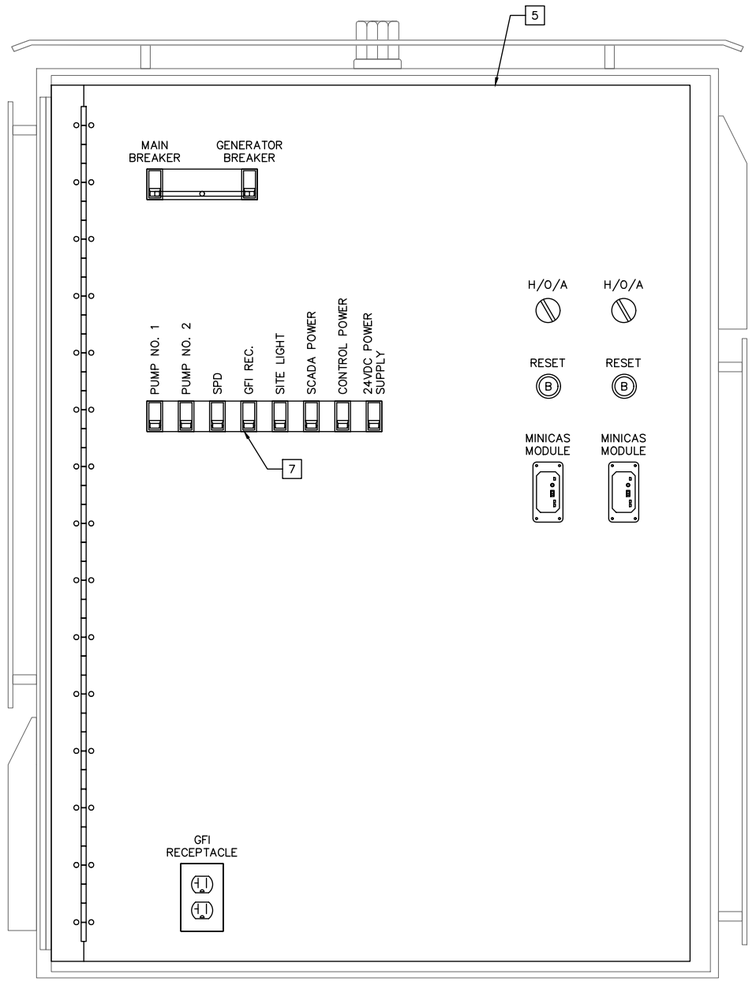

PUMP CONTROL PANEL
SWING–OUT LAYOUT
B
SCALE: NO SCALE

KEY NOTES:

1. PROVIDE 48" X 36" X 12", 316 STAINLESS STEEL ENCLOSURE WITH PAD–LOCKABLE 3–POINT LATCH.
2. PROVIDE NEMA 4X RED ALARM LIGHT.
3. PROVIDE STAINLESS STEEL SUN–SHIELDS ON THE TOP AND SIDES OF THE ENCLOSURE. ATTACH SUN–SHIELDS WITH STAINLESS STEEL HARDWARE.
4. PROVIDE ENCLOSURE COOLING FANS WITH STAINLESS STEEL SHROUDS. SIZE ENCLOSURE COOLING FANS TO ADEQUATELY DISSIPATE HEAT.
5. PROVIDE SWING–OUT PANEL AND DOOR STOP KIT.
6. PROVIDE EMERGENCY GENERATOR RECEPTACLE. COORDINATE REQUIREMENTS WITH THE CITY.
7. ALL CIRCUIT BREAKERS SHALL BE ACCESSIBLE THROUGH THE SWING–OUT.

No.	Revisions	Date	By

Kimley»Horn

© 2025 KIMLEY-HORN AND ASSOCIATES, INC.
200 CENTRAL AVENUE, SUITE 600
ST. PETERSBURG, FL 33701
P: 727 547 3999
WWW.KIMLEY-HORN.COM REGISTRY NO. 35106

DESIGN ENGINEER: JASON A. HOYT, P.E.
FL LICENSE NUMBER 101453
DATE:

SCALE: AS NOTED
DESIGN: JAH
DRAWN: EBW
CHECKED: JAH

PUMP CONTROL PANEL LAYOUT - RVSS

CITY OF ST. PETE BEACH
PUMP & LIFT STATION REHABILITATIONS
PID# PS26-401-608-00
PINELLAS COUNY FLORIDA

DATE: DECEMBER 2025

PROJECT NO. 148404108

SHEET NUMBER E-35

No.	Revisions	Date	By

Kimley»Horn

© 2025 KIMLEY-HORN AND ASSOCIATES, INC.

200 CENTRAL AVENUE, SUITE 600
ST. PETERSBURG, FL 33701
P: 727 547 3999
WWW.KIMLEY-HORN.COM REGISTRY NO. 35106

DESIGN ENGINEER:
JASON A. HOYT, P.E.
FL LICENSE NUMBER
101453
DATE:

SCALE:	DESIGN:	DRAWN:	CHECKED:
AS NOTED	JAH	EBW	JAH

PUMP CONTROL PANEL WIRING
DIAGRAM - RVSS

CITY OF ST. PETE BEACH
PUMP & LIFT STATION
REHABILITATIONS
PID# PS26-401-608-00
PINELLAS COUNY
FLORIDA

DATE:
DECEMBER 2025

PROJECT NO.
148404108

SHEET NUMBER
E-36

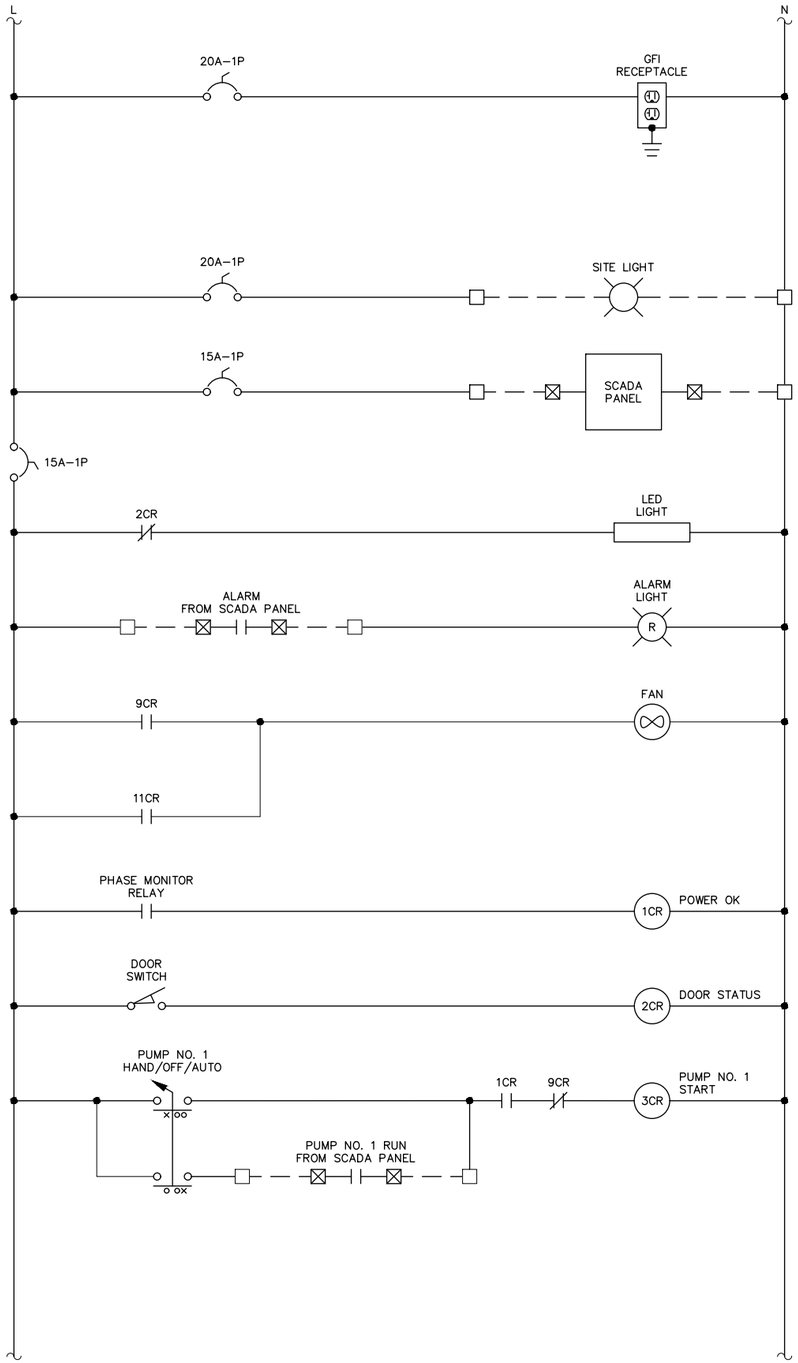

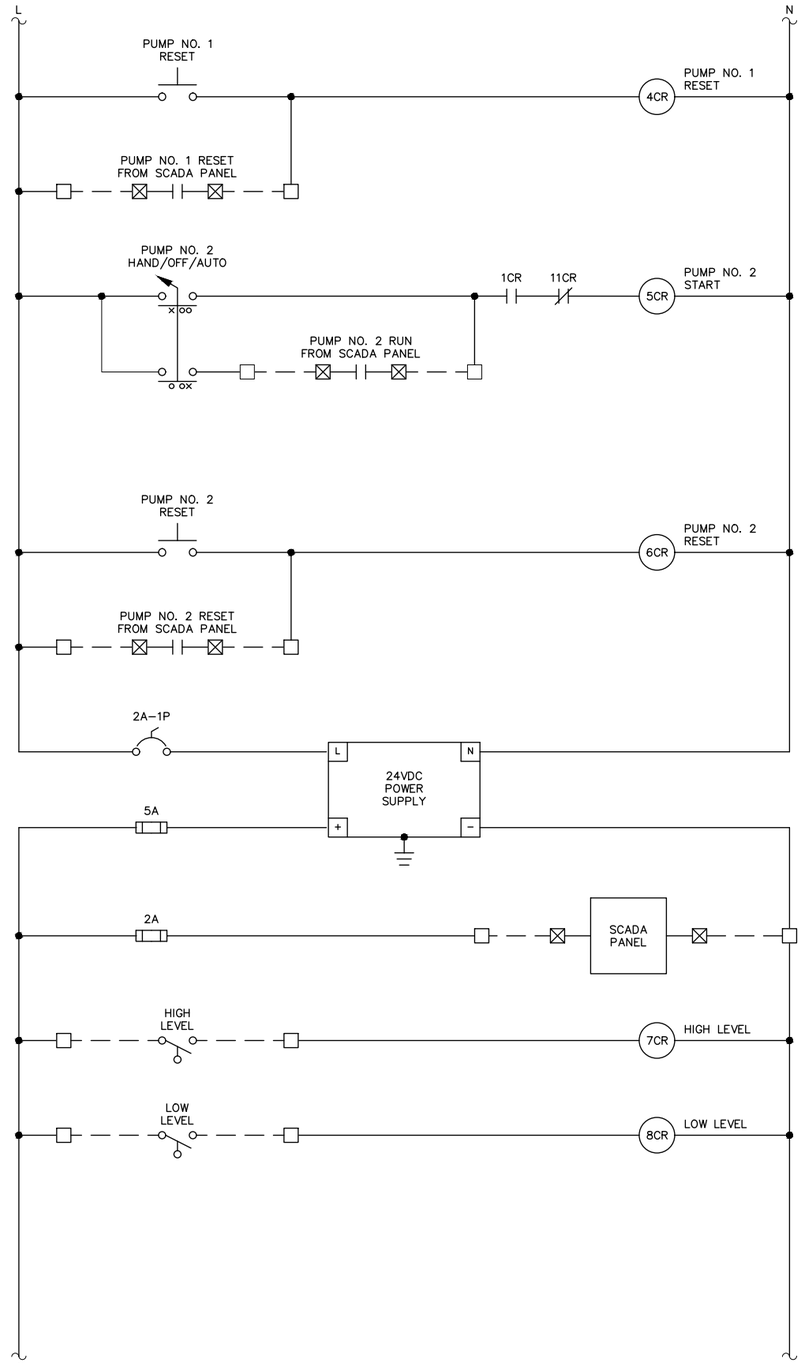

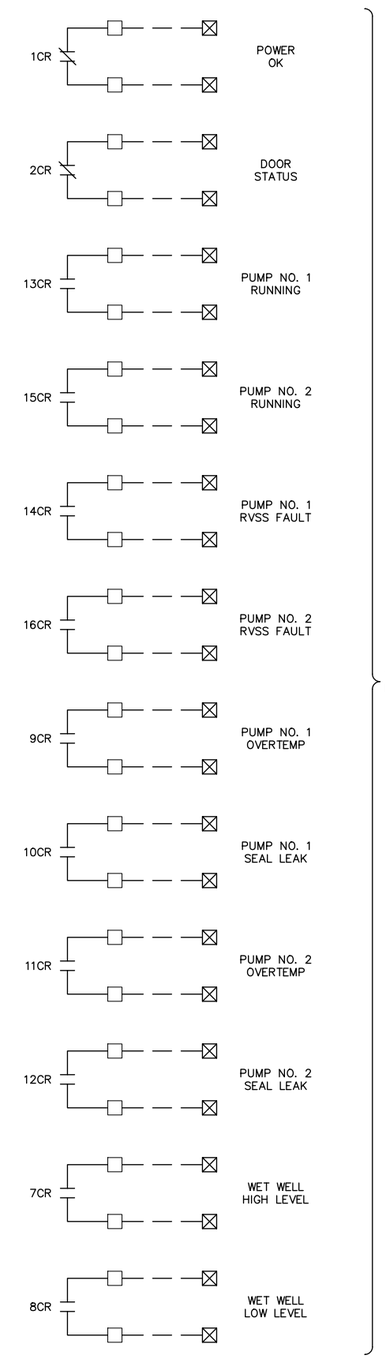

No.	Revisions	Date	By

Kimley»Horn

© 2025 KIMLEY-HORN AND ASSOCIATES, INC.

200 CENTRAL AVENUE, SUITE 600
ST. PETERSBURG, FL 33701
P: 727 547 3999
WWW.KIMLEY-HORN.COM REGISTRY NO. 35106

DESIGN ENGINEER: JASON A. HOYT, P.E.
FL LICENSE NUMBER 101453
DATE:

SCALE: AS NOTED
DESIGN: JAH
DRAWN: EBW
CHECKED: JAH

PUMP CONTROL PANEL WIRING DIAGRAM - RVSS

CITY OF ST. PETE BEACH
PUMP & LIFT STATION REHABILITATIONS
PID# PS26-401-608-00
PINELLAS COUNY FLORIDA

DATE: DECEMBER 2025

PROJECT NO. 148404108

SHEET NUMBER E-37

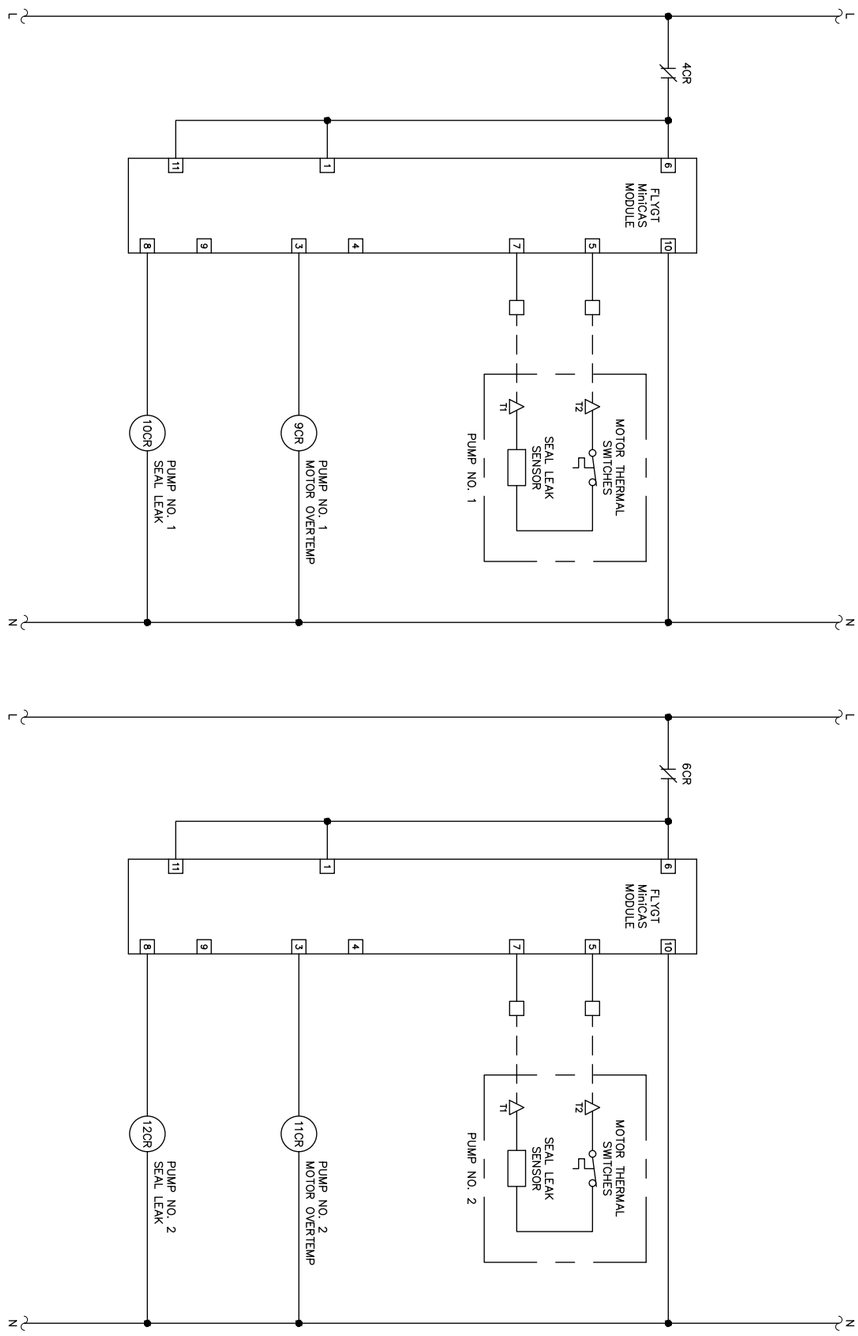

CITY OF ST. PETE BEACH
PUMP & LIFT STATION
REHABILITATIONS
PID# PS26-401-608-00

PINELLAS COUNY FLORIDA

PUMP CONTROL PANEL WIRING
DIAGRAM - RVSS

SCALE: AS NOTED
DESIGN: JAH
DRAWN: EBW
CHECKED: JAH

DESIGN ENGINEER:

JASON A. HOYT, P.E.
FL LICENSE NUMBER
101453
DATE:

Kimley»Horn

© 2025 KIMLEY-HORN AND ASSOCIATES, INC.
200 CENTRAL AVENUE, SUITE 600
ST. PETERSBURG, FL 33701
P: 727 547 3999
WWW.KIMLEY-HORN.COM REGISTRY NO. 35106

No.	Revisions	Date	By

DATE: DECEMBER 2025
PROJECT NO. 148404108
SHEET NUMBER E-38

GENERAL NOTES:

1. REDUCED VOLTAGE SOFT STARTERS SHALL BE ALLEN BRADLEY SMC-3 WITH CONFORMAL COATED CIRCUIT BOARDS.

No.	Revisions	Date	By

Kimley»Horn
© 2025 KIMLEY-HORN AND ASSOCIATES, INC.
200 CENTRAL AVENUE, SUITE 600
ST. PETERSBURG, FL 33701
P: 727 547 3999
WWW.KIMLEY-HORN.COM REGISTRY NO. 35106

DESIGN ENGINEER:
JASON A. HOYT, P.E.
FL LICENSE NUMBER
101453
DATE:

SCALE: AS NOTED
DESIGN: JAH
DRAWN: EBW
CHECKED: JAH

PUMP CONTROL PANEL WIRING
DIAGRAM - RVSS

CITY OF ST. PETE BEACH
PUMP & LIFT STATION
REHABILITATIONS
PID# PS26-401-608-00
PINELLAS COUNY FLORIDA

DATE:
DECEMBER 2025

PROJECT NO.
148404108

SHEET NUMBER
E-39

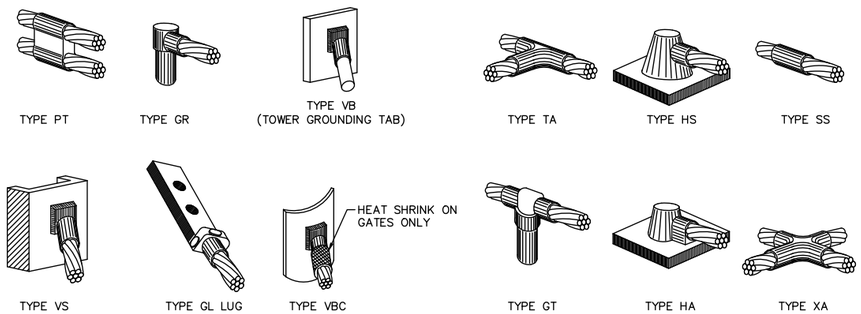

NOTES:

1. CADWELD "TYPES" SHOWN ABOVE ARE EXAMPLES. PROVIDE APPROPRIATE TYPES AS REQUIRED.

A TYPICAL CAD WELD DETAILS
SCALE: NO SCALE

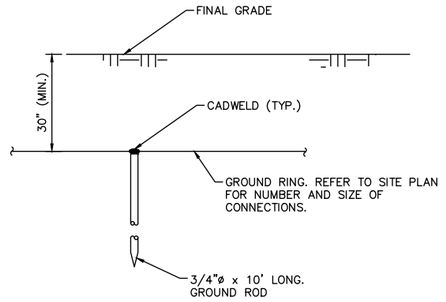

B GROUND ROD DETAIL
SCALE: NO SCALE

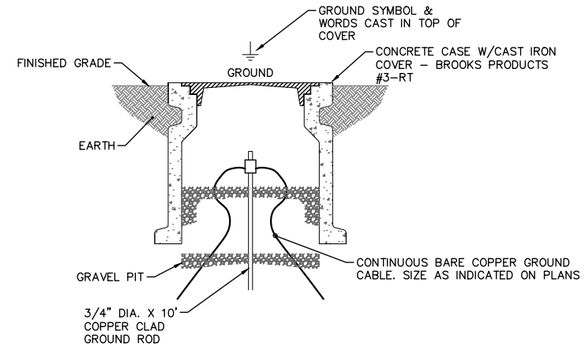

C GROUND TEST WELL DETAIL
SCALE: NO SCALE

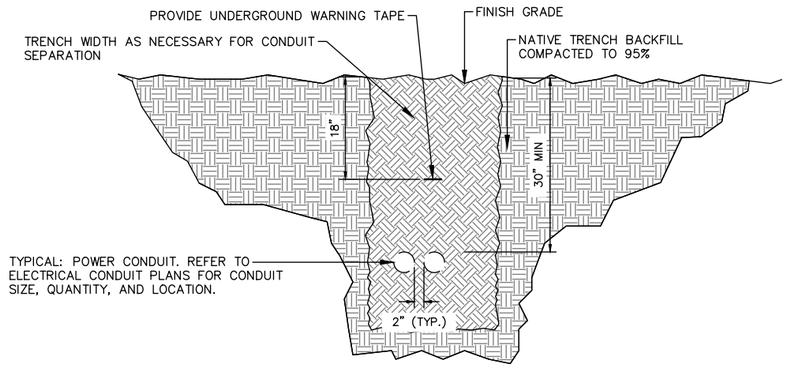

D TRENCH DETAIL
SCALE: NO SCALE

No.	Revisions	Date	By

Kimley»Horn
© 2025 KIMLEY-HORN AND ASSOCIATES, INC.
200 CENTRAL AVENUE, SUITE 600
ST. PETERSBURG, FL 33701
P: 727 547 3999
WWW.KIMLEY-HORN.COM REGISTRY NO. 35106

DESIGN ENGINEER:
JASON A. HOYT, P.E.
FL LICENSE NUMBER
101453
DATE:

SCALE:	DESIGN:	DRAWN:	CHECKED:
AS NOTED	JAH	EBW	JAH

ELECTRICAL DETAILS

CITY OF ST. PETE BEACH
PUMP & LIFT STATION
REHABILITATIONS
PID# PS26-401-608-00
PINELLAS COUNY FLORIDA

DATE:
DECEMBER 2025

PROJECT NO.
148404108

SHEET NUMBER
E-40

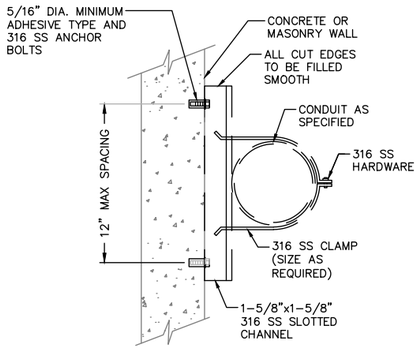

NOTES:

1. CONTRACTOR WILL BE RESPONSIBLE FOR PROVIDING THE CORRECT SIZE ANCHOR BOLTS BASED ON LOAD.
2. FOR SINGLE CONDUITS 2" AND LARGER, USE SLOTTED CHANNEL AND ADHESIVE ANCHORS AS SHOWN.
3. FOR SINGLE CONDUITS 1-1/2" AND SMALLER, SLOTTED CHANNEL MAY BE OMITTED AND USE OF NON-ADHESIVE ANCHORS ARE PERMITTED.

A WALL CONDUIT INSTALLATION DETAIL

SCALE: NO SCALE

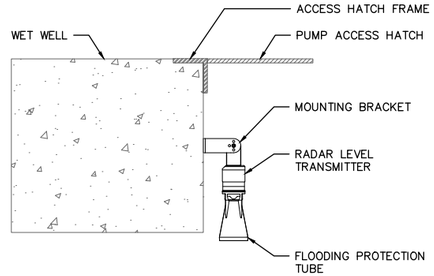

B RADAR LEVEL TRANSMITTER INSTALLATION DETAIL

SCALE: NO SCALE

No.	Revisions	Date	By

Kimley»Horn
© 2025 KIMLEY-HORN AND ASSOCIATES, INC.
200 CENTRAL AVENUE, SUITE 600
ST. PETERSBURG, FL 33701
P: 727 547 3999
WWW.KIMLEY-HORN.COM REGISTRY NO. 35106

DESIGN ENGINEER: JASON A. HOYT, P.E.
FL LICENSE NUMBER 101453
DATE:

SCALE: AS NOTED
DESIGN: JAH
DRAWN: EBW
CHECKED: JAH

ELECTRICAL DETAILS

CITY OF ST. PETE BEACH
PUMP & LIFT STATION REHABILITATIONS
PID# PS26-401-608-00
PINELLAS COUNY FLORIDA

DATE: DECEMBER 2025

PROJECT NO. 148404108

SHEET NUMBER E-41

155 Corey Avenue
St. Pete Beach, FL 33706-1839
www.stpetebeach.org

ADDENDUM 1

Wastewater Lift Stations Rehabilitation

Issued 3/30/2026

*Sealed bids must be received by **9:00 AM on 04/15/2026** electronically via Bonfire. They will be publicly opened and read at **11:00 AM EST on 04/15/2026**. All bidders are invited to attend this bid opening. Bids received after the deadline will not be accepted.*

Addendum 1 includes:
Corrected date of Bid Packages deadline from 4/18/2026 to 4/15/2026 – reference BID PACKAGES under III. GENERAL CONTRACT TERMS.

BID PACKAGES
Sealed bids will be accepted by the City until 04/15/2026 at 9:00 AM EST (Deadline). No bids shall be accepted by the City after this deadline – NO EXCEPTIONS. Bid Packages must be electronically submitted via Bonfire Clearly marked as: "Wastewater Lift Stations Rehabilitation." If a link is needed for either site, please contact the Procurement Manager (purchasing@stpetebeach.org.) All Bidders are invited to attend this bid opening.

155 Corey Avenue
St. Pete Beach, FL 33706-1839
www.stpetebeach.org

ADDENDUM 2

Wastewater Lift Stations Rehabilitation

Issued 3/31/2026

*Sealed bids must be received by **9:00 AM on 04/15/2026** electronically via Bonfire. They will be publicly opened and read at **11:00 AM on 04/15/2026.** All bidders are invited to attend this bid opening. Bids received after the deadline will not be accepted.*

Addendum 2 includes:

Prebid Minutes
Questions and Answers

Optional - Pre-Bid Meeting Minutes
RFB: Wastewater Lift Stations Rehabilitation
March 25, 2026
11:00 AM

Staff Members Present:
Sara Spain, Procurement Manager
Ariana Wilson-Romo, Exec. Assistant City Clerk's Office
John Taylor, Assistant Finance Director
Shawn Clark, Public Services
Dejan Milosevic, Project Manager Public Services

Others Present:

Name	***Company***	***Contact***
Mike Ritcher	US Water Services	mritcher@uswatercorp.net
Brad Young	Custom Pump and Controls	b.young@custompump.com
Ryan Kievit	Technical Sales Corporation	ryan@tsctampa.com
Nia Tulloch	Atlantic Pipe Services	ntulloch@atlanticpipe.us
Amanda Gonzalez	Kimley Horn	Amanda.gonzalez@kimley-horn.com
Brandon Alderman	Kimley Horn	Brandon.alderman@kimley-horn.com
Sawyer Hill	Elite Industrial Painting Inc	sawyer@eipainting.com

The meeting was called to order at 11:02 AM.

All attendees were present via Teams.

Ms. Spain briefly reviewed important dates and times which are as follows:

- Receipt of questions due 4/1 at 10AM
- Bids due 4/15 by 9AM
- Bid opening 4/15 at 11AM

She requested that any questions be submitted in writing to purchasing@stpetebeach.org. Questions will be answered via an addendum that will be posted to the City website and Bonfire.

Shawn Clark summarized that this project is covering some of the lift station panels that got damaged during the hurricanes. There are about 9 or 10 of them total, with work ranging from straight panel replacements to complete rehabs of stations and adding generators in automatic transmissions or transfer switches for power.

Ms. Spain clarified that this is a request for bid, this project will be awarded to the lowest bidder.

The following questions were asked:
Q: Regarding the coding stroke, is it just for the valve bulb fittings, any gigs? A: Nothing more than a couple of plug valves and trick valves.
Q: Regarding the coding, are we just painting the piping inside the vault or coating the concrete also? A: Just the piping.
Q: Preferred SCADA provider? A: The City is currently bidding this however, the City is currently using Ellis Automated.
Q: Is the City supplying the radar transmitters? A: If needed the City can supply.
Q: Does the City have a panel provider? A: No, not at this time.

Q: Does the City have a preferred fence color for the vinyl fencing? A: No, but likely a white, almond, or stone.
Q: Staging area? A: Room may be tight but an area can be found to utilize.
Q: Lift station 4, the palm trees and shrubs will need to be removed. Will those be replaced? A: Removed and disposed of.
Q: Lift station 4 and 10, pump courts will have to be extended. Will new pumps be brought in or will the City be sending them off to get quartz put on? A: Will be answered via an addendum.
Q: Will a demo permit for the concrete demo be needed? Will permitting be through the City or through Pinellas? A: Will confirm with the permitting department, but believe all will be permitted through the City.

There being no additional questions, the meeting was adjourned at 11:13 AM.

Questions and Answers

Prebid Q: Regarding the valve vault, is it just for the valve bulb fittings, any guages? A: Nothing more than a couple of plug valves for bypass and check valves. There are typically two pressure gauges as well.

Prebid Q: Regarding the coating, are we just painting the piping inside the vault or coating the concrete also? A: Just the piping.

Prebid Q: Is the concrete in the vault getting coated? A: No, just the valves and fittings.

Prebid Q: Preferred SCADA provider? A: The City is currently bidding this however, the City is currently using Ellis Automated.

Prebid Q: Who will be setting up the SCADA? A: The City contractor will.

Prebid Q: Is the City supplying the radar transmitters? Who is responsible for supplying the radar transmitter? A: If needed the City can supply.

Prebid Q: Does the City have a panel provider? A: No, not at this time.

Prebid Q: Does the City have a preferred fence color for the vinyl fencing? 6ft Vinyl fence preferred color? A: Please bid white.

Prebid Q: Staging area? A: Room may be tight but an area can be found to utilize.

Prebid Q: Lift station 4, the palm trees and shrubs will need to be removed. Will those be replaced? A: The palms and shrubs are to be removed and disposed of.

Prebid Q: Lift station 4 and 10, pump cords will have to be extended. Will new pumps be brought in or will the City be sending them off to get added length put on? L/S 04 and L/S 10 pump cords will need to be lengthened, who will be responsible or will the City supply new pumps? A: City will be sending pumps off to get cords lengthened, if needed.

Prebid Q: Will a demo permit for the concrete demo be needed? Will permitting be through the City or through Pinellas? Permits needed and where to apply for? A: Demo permit will be needed. Permitting will be through the City. Apply on City website.

155 Corey Avenue
St. Pete Beach, FL 33706-1839
www.stpetebeach.org

ADDENDUM 3

Wastewater Lift Stations Rehabilitation

Issued 4/9/2026

*Sealed bids must be received by **9:00 AM on 04/15/2026** electronically via Bonfire. They will be publicly opened and read at **11:00 AM on 04/15/2026.** All bidders are invited to attend this bid opening. Bids received after the deadline will not be accepted.*

Addendum 3 includes:

Questions and Answers
Lift Stations Exhibits

Questions and Answers

1. Does this project have any minority requirements/goals? NO
2. Does this project have any Davis Bacon requirements ? NO
3. Does this project have any Build by America requirements? NO
4. Does this project require a full time on site superintendent ? Contractor discretion
5. Does this project require an engineers field office? Field office is not required
6. Does this project have an engineers estimate? An engineering estimate was not included as part of this project
7. Please confirm the allowed work hours for this project. See 8th page of bid package under DETAILED SPECIFICATIONS
8. Does the City have a bypass plan? Does the City know the existing flow calcs at each station? Per specification Section 16 – Sanitary Sewer Bypass Pumping 16.03 The Contractor shall, within 30 days of the date of the Notice to Proceed, submit to the Project Manager a detailed Bypass Pumping Plan for each site by-pass pumping will be needed. City of St. Pete Beach Lift Station Exhibit are attached. Lift Station Exhibits provide design points for each Lift Station. Per specification Section 16 – Sanitary Sewer Bypass Pumping 16.04A By-pass pumping system shall consist of at least a primary pump and a backup pump. Each pump shall have a minimum pumping capacity of 150% of the anticipated peak flows. When bypassing a pump station, 150% of the lift station capacity (G.P.M. & T.D.H) shall be provided.
9. Please clarify if their is a specific rehab coating allowed. Contractor to reference Specifications Section 9 – Piping Material: Ductile Iron Piping and Fittings 9.07 Zinc/Epoxy/Fluoropolymer Protective Coatings
10. Would the City be open to accepting a Hot Dipped Galvanized platform, stairs & railing in lieu of aluminum ? The project shall be bid per plans
11. Does the City require a bid bond for this project? If so, what percent and shall we use a standard AIA form? No bid bond required
12. Please confirm which forms need to be included in the bid proposal. Contractor's Bid Submittal, Bid Form, References, Public Entity Criminal Affidavit, Non-Collusion Affidavit
13. Are all existing pumps flygt? Yes

SITE ADDRESS
(ELECTRICAL BILLING ADDRESS):
8665 BOCA CIEGA DRIVE
ST. PETE BEACH, FL 33706

PUMP STATION 1
INFORMATION EXHIBIT

NEAREST ADDRESS:
8665 BOCA CIEGA DRIVE
ST. PETE BEACH, FL 33706

SOUTH WET WELL

WET WELL DEPTH	26
WET WELL DIAMETER	12 FT
APPROX. WET WELL STORAGE*	11,421 GAL

*CALCULATED FROM LOW WATER LEVEL TO TOP OF WET WELL

NORTH WET WELL

WET WELL DEPTH	26
WET WELL DIAMETER	12 FT
APPROX. WET WELL STORAGE*	11,421 GAL

*CALCULATED FROM LOW WATER LEVEL TO TOP OF WET WELL

FORCE MAIN

FORCE MAIN SIZE/MATERIAL	18-IN DIP,24-IN DIP
BY-PASS PORT SIZE	6-IN CAMLOCK
ARVS TO BE MAINTAINED	0

BY-PASS PUMP REQUIRED

PUMP TYPE	6-IN DIESEL SELF PRIMING PUMP

PUMP STATION PUMPS

PUMP MODEL & HP	FLYGT NP 3315/140 HP
YEAR OF PUMP INSTALLATION	2014
EST. YEAR OF PUMP OVERHAUL	2024
NUMBER OF PUMPS	4
DESIGN POINTS	2 PUMPS: 5300 GPM @ 125 FT TDH 2 PUMPS: 4200 GPM @ 110 FT TDH 1 PUMP: 2800 GPM @ 80 FT TDH 1 PUMP: 1600 GPM @ 60 FT TDH
IMPELLER DIAMETER	447 MM

ON-SITE GENERATOR

GENERATOR TYPE	CUMMINS DFEG-5750795
FUEL TYPE	DIESEL
FUEL TANK SIZE	1,000 GAL
FUEL CONSUMPTION RATE	112 GAL/HR
POWER VOLTAGE/PHASE	480 V/3 PH

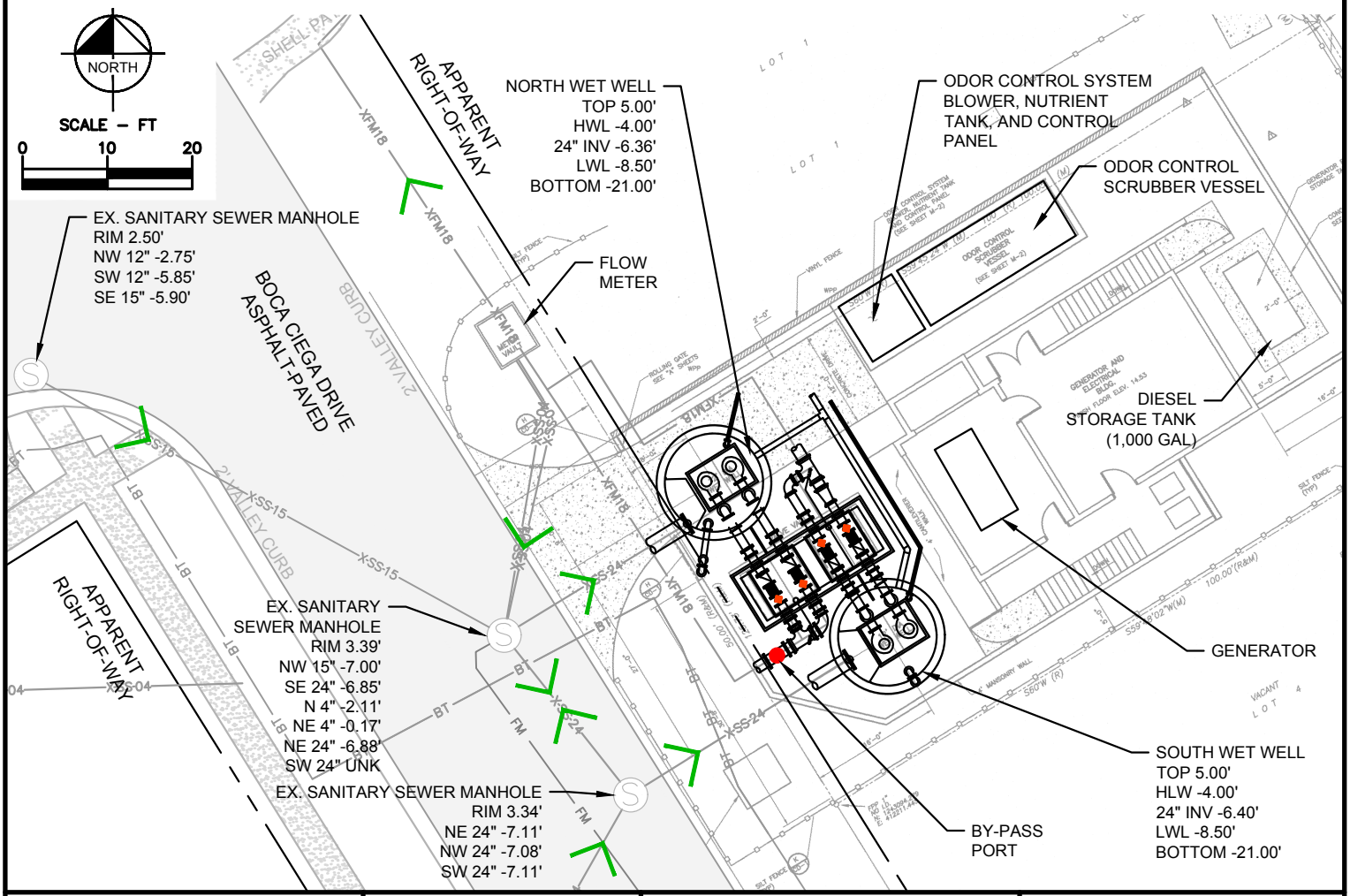

PUMP STATION 1 EXHIBIT
FID: PS001

St. Pete Beach
The Sunset Capital of Florida

Kimley»Horn

MAY 2021

SITE ADDRESS
(ELECTRICAL BILLING ADDRESS):
00 55TH AVENUE
ST. PETE BEACH, FL 33706

PUMP STATION 2 INFORMATION EXHIBIT

NEAREST ADDRESS:
120 55TH AVENUE
ST. PETE BEACH, FL 33706

WET WELL

WET WELL DEPTH	24.2 FT
WET WELL DIAMETER	12 FT
APPROX. WET WELL STORAGE*	17,088 GAL

*CALCULATED FROM LOW WATER LEVEL TO TOP OF WET WELL

FORCE MAIN

FORCE MAIN SIZE/MATERIAL	16–IN PVC
BY–PASS PORT SIZE	8–IN CAMLOCK
ARVS TO BE MAINTAINED	13

BY–PASS PUMP REQUIRED

PUMP TYPE	8–IN DIESEL SELF PRIMING PUMP

VFDs INSTALLED FOR FLOW CONTROL

PUMP STATION PUMPS

PUMP MODEL & HP	FLYGT NP 3202/35 HP
YEAR OF PUMP INSTALLATION	2015
EST. YEAR OF PUMP OVERHAUL	2025
NUMBER OF PUMPS	3
DESIGN POINTS	60 HZ: 4420 GPM @ 46.2 FT TDH 54 HZ: 3780 GPM @ 37.9 FT TDH 50 HZ: 2350 GPM @ 23.8 FT TDH 35 HZ: 1110 GPM @ 17 FT TDH
IMPELLER DIAMETER	334 MM

ON–SITE GENERATOR

GENERATOR TYPE	KOHLER 100REZGD
FUEL TYPE	NATURAL GAS
FUEL TANK SIZE	N/A– METERED
FUEL CONSUMPTION RATE	39.9 M3/HR
POWER VOLTAGE/PHASE	460 V/ 3 PH

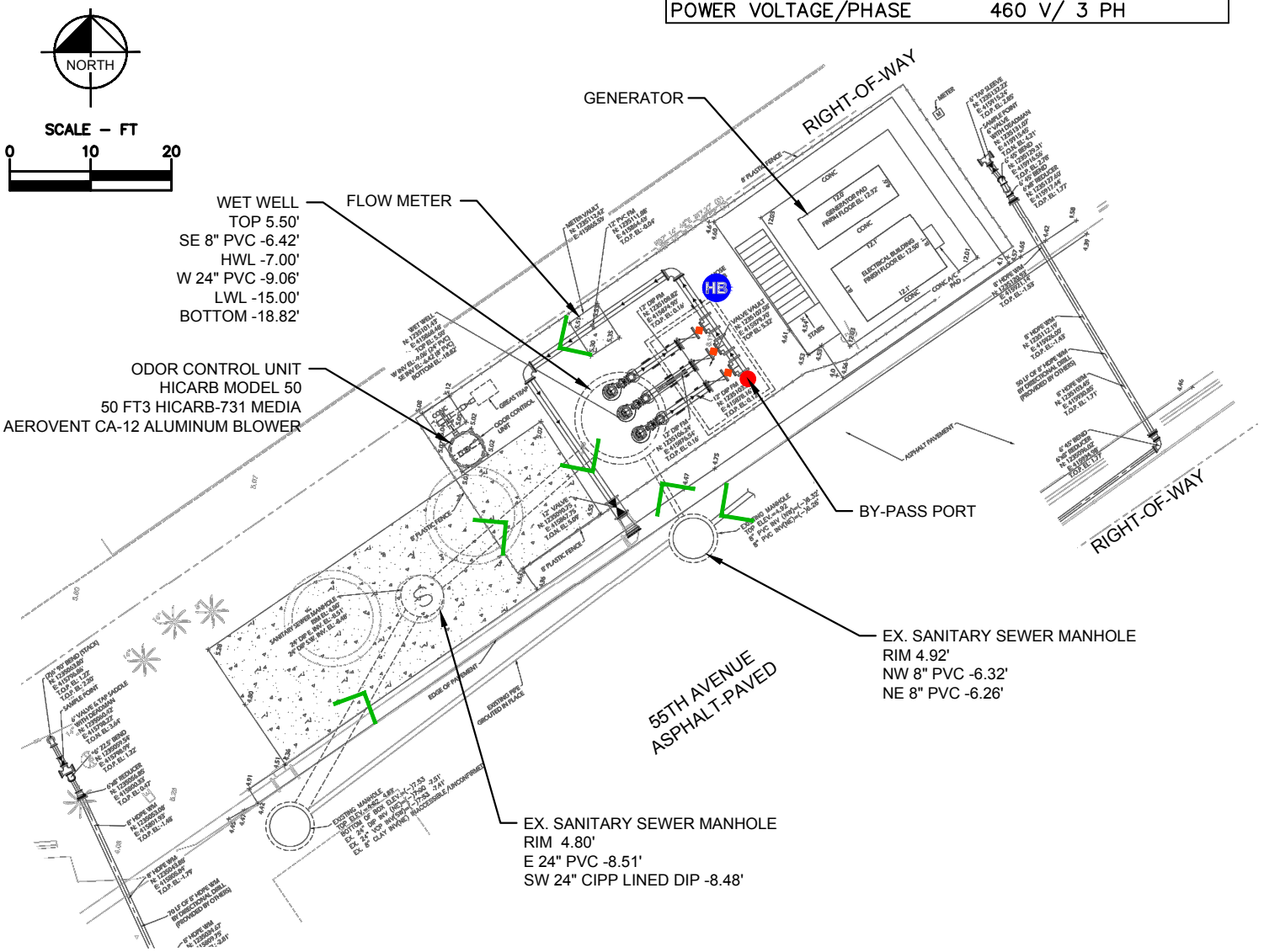

PUMP STATION 2 EXHIBIT

FID: PS002

St. Pete Beach
The Sunset Capital of Florida

Kimley»Horn

MAY 2021

SITE ADDRESS
(ELECTRICAL BILLING ADDRESS):
00 E DEBAZAN AVENUE
ST. PETE BEACH, FL 33706

PUMP STATION 3 INFORMATION EXHIBIT

NEAREST ADDRESS:
3300 E DEBAZAN AVENUE
ST. PETE BEACH, FL 33706

WET WELL

WET WELL DEPTH	23.12 FT
WET WELL DIAMETER	12 FT
APPROX. WET WELL STORAGE*	14,428 GAL

*CALCULATED FROM LOW WATER LEVEL TO TOP OF WET WELL

FORCE MAIN

FORCE MAIN SIZE/MATERIAL	10-IN PVC, 12-IN HDPE
BY-PASS PORT SIZE	4-IN CAMLOCK
ARVS TO BE MAINTAINED	5

BY-PASS PUMP REQUIRED

PUMP TYPE	4-IN DIESEL SELF PRIMING PUMP

LIFT STATION PUMPS

PUMP MODEL & HP	FLYGT NP 3171/34 HP
YEAR OF PUMP INSTALLATION	2016
EST. YEAR OF PUMP OVERHAUL	2026
NUMBER OF PUMPS	2
DESIGN POINT	1385 GPM @ 64 FT TDH
IMPELLER DIAMETER	217 MM

ON-SITE GENERATOR

GENERATOR TYPE	KOHLER 80REOZIF
FUEL TYPE	DIESEL
FUEL TANK SIZE	200 GAL
FUEL CONSUMPTION RATE	5.1 GAL/HR
POWER VOLTAGE/PHASE	480 V/3 PH

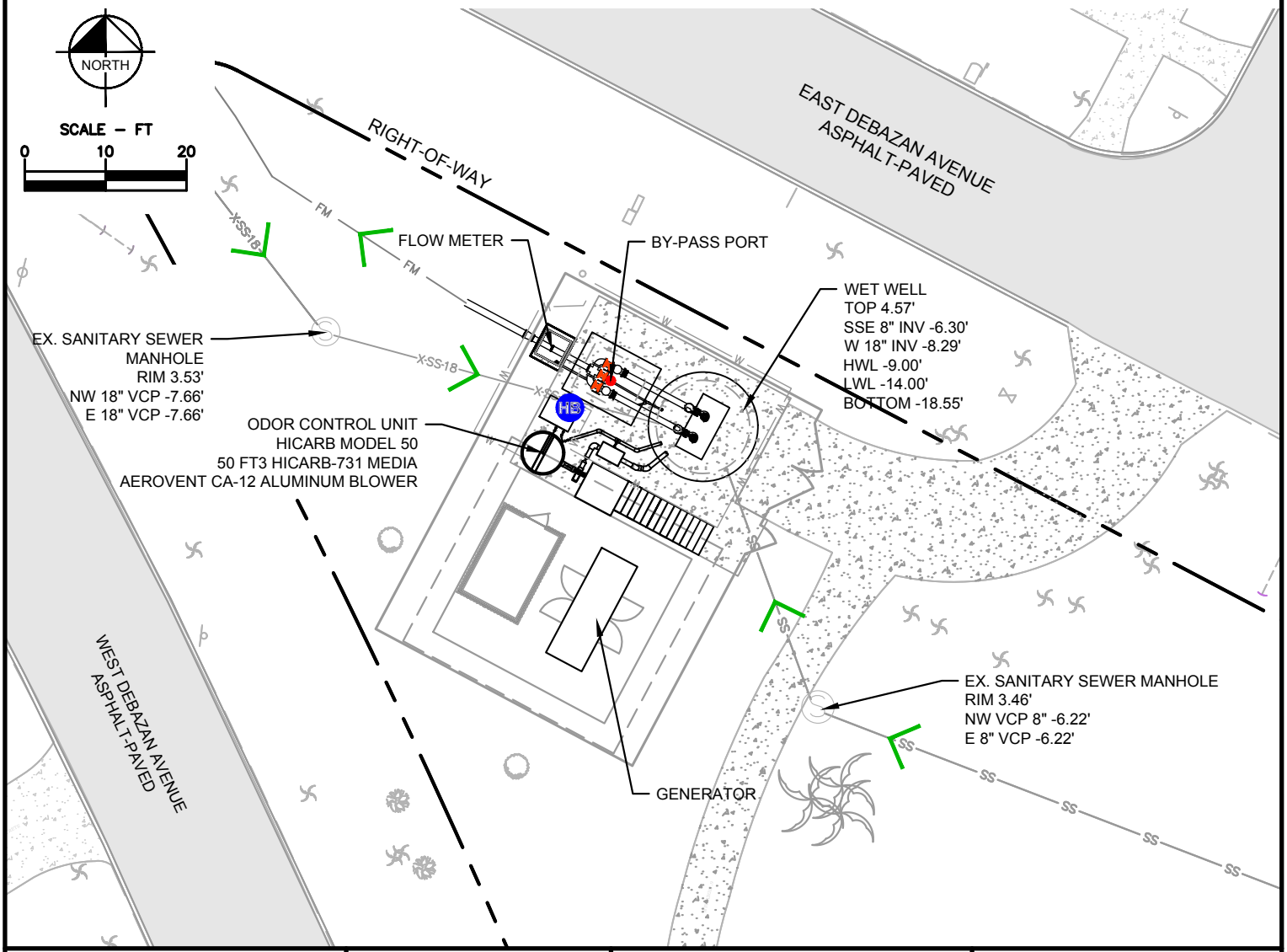

PUMP STATION 3 EXHIBIT

FID: PS003

St. Pete Beach
The Sunset Capital of Florida

Kimley»Horn

MAY 2021

SITE ADDRESS
(ELECTRICAL BILLING ADDRESS):
00 PASS A GRILLE WAY
ST. PETE BEACH, FL 33706

LIFT STATION 4 INFORMATION EXHIBIT

NEAREST ADDRESS:
1901 PASS A GRILLE WAY
ST. PETE BEACH, FL 33706

WET WELL

WET WELL DEPTH	14 FT
WET WELL DIAMETER	10 FT
APPROX. WET WELL STORAGE*	7,390 GAL

*CALCULATED FROM LOW WATER LEVEL TO TOP OF WET WELL

FORCE MAIN

FORCE MAIN SIZE/MATERIAL	6-IN PVC
BY-PASS PORT SIZE	4-IN CAMLOCK
ARVS TO BE MAINTAINED	0

LIFT STATION PUMPS

PUMP MODEL & HP	FLYGT NP 3102/5 HP
YEAR OF PUMP INSTALLATION	2021
EST. YEAR OF PUMP OVERHAUL	2031
NUMBER OF PUMPS	2
DESIGN POINT	500 GPM @ 23 FT TDH
IMPELLER DIAMETER	172 MM

PORTABLE GENERATOR – PLUG OUTLET

GENERATOR TYPE	20 kW/ 240 V 3 PH
FUEL TYPE	DIESEL

BY-PASS PUMP REQUIRED

PUMP TYPE	4-IN DIESEL SELF PRIMING PUMP

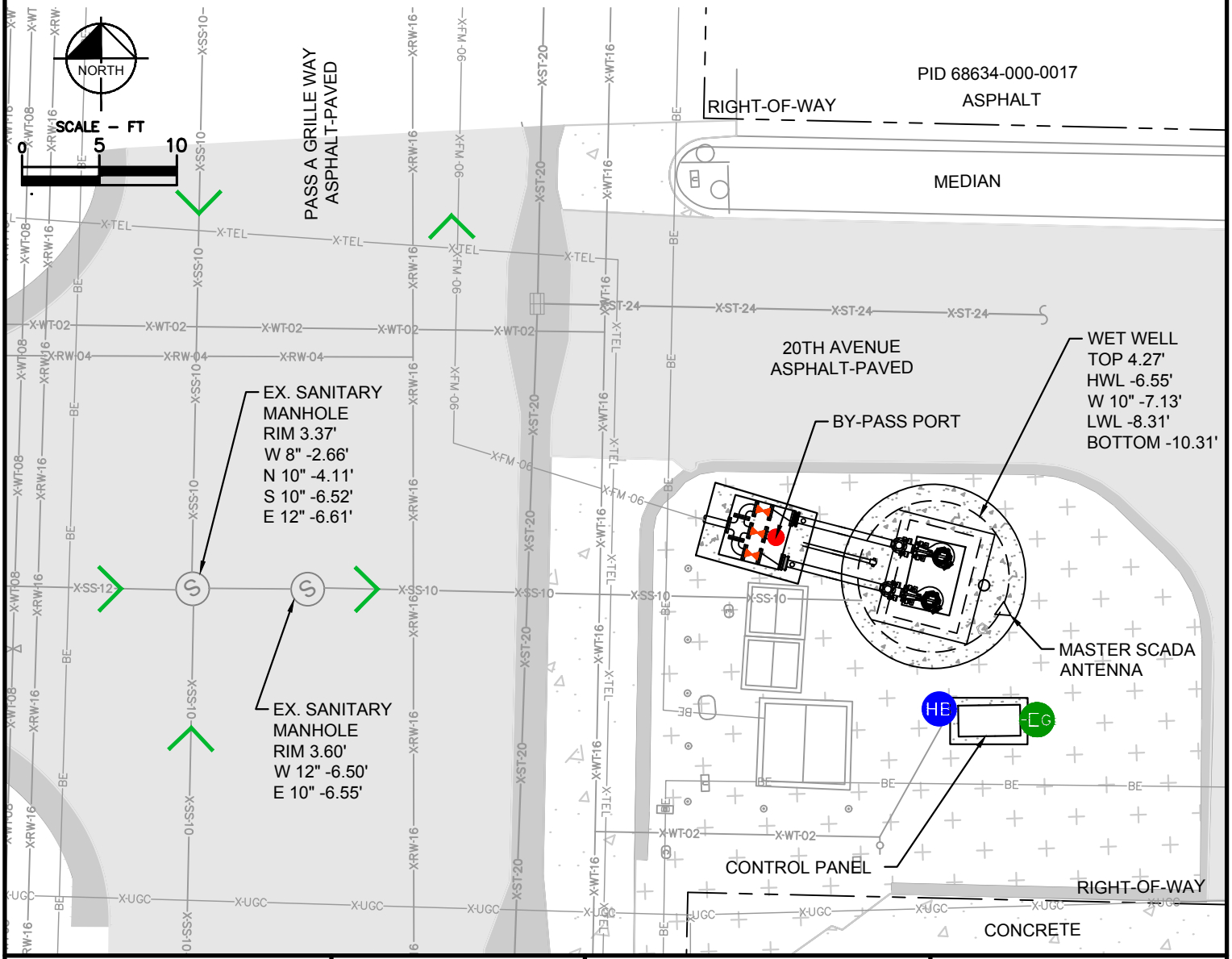

LIFT STATION 4 EXHIBIT
FID: LS004

St. Pete Beach
The Sunset Capital of Florida

Kimley»Horn

MAY 2021

SITE ADDRESS
(ELECTRICAL BILLING ADDRESS):
00 PASS A GRILLE WAY
ST. PETE BEACH, FL 33706

LIFT STATION 5 INFORMATION EXHIBIT

NEAREST ADDRESS:
600 PASS A GRILLE WAY
ST. PETE BEACH, FL 33706

WET WELL

WET WELL DEPTH	13.5 FT
WET WELL DIAMETER	11 FT
APPROX. WET WELL STORAGE*	8,090 GAL

*CALCULATED FROM LOW WATER LEVEL TO TOP OF WET WELL

FORCE MAIN

FORCE MAIN SIZE/MATERIAL	6-IN PVC, 4-IN PVC
BY-PASS PORT SIZE	4 IN CAMLOCK
ARVS TO BE MAINTAINED	0

LIFT STATION PUMPS

PUMP MODEL & HP	FLYGT NP 3102/ 5 HP
YEAR OF PUMP INSTALLATION	2014
EST. YEAR OF PUMP OVERHAUL	2024
NUMBER OF PUMPS	2
DESIGN POINT	305 GPM @ 22.1 FT TDH
IMPELLER DIAMETER	152 MM

PORTABLE GENERATOR – PLUG OUTLET

GENERATOR TYPE	20 kW/ 240 V 3 PH
FUEL TYPE	DIESEL

BY-PASS PUMP REQUIRED

PUMP TYPE	4-IN DIESEL SELF PRIMING PUMP

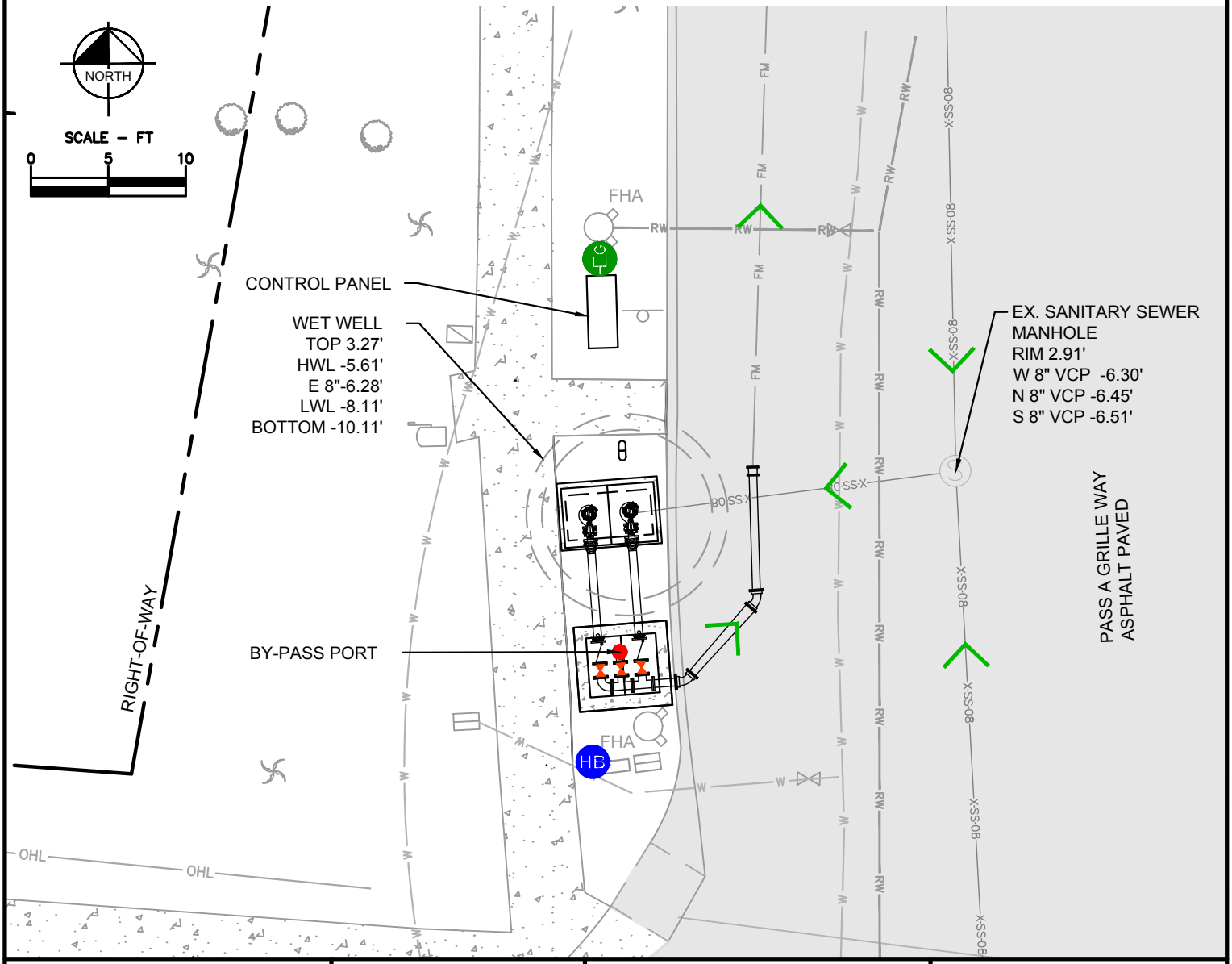

LIFT STATION 5 EXHIBIT
FID: LS005

St. Pete Beach
The Sunset Capital of Florida

Kimley»Horn

MAY 2021

SITE ADDRESS (ELECTRICAL BILLING ADDRESS): 00 W VINA DEL MAR BLVD. ST. PETE BEACH, FL 33706	# LIFT STATION 6 INFORMATION EXHIBIT	NEAREST ADDRESS: 2262 W VINA DEL MAR BLVD. ST. PETE BEACH, FL 33706

WET WELL

WET WELL DEPTH	16 FT
WET WELL DIAMETER	12 FT
APPROX. WET WELL STORAGE*	12,022 GAL

*CALCULATED FROM LOW WATER LEVEL TO TOP OF WET WELL

FORCE MAIN

FORCE MAIN SIZE/MATERIAL	8–IN CIP, DIP, PVC
BY–PASS PORT SIZE	4–IN CAMLOCK
ARVS TO BE MAINTAINED	0

LIFT STATION PUMPS

PUMP MODEL & HP	FLYGT NP 3102/ 5 HP
YEAR OF PUMP INSTALLATION	2014
EST. YEAR OF PUMP OVERHAUL	2024
NUMBER OF PUMPS	2
DESIGN POINT	385 GPM @ 18.7 FT TDH
IMPELLER DIAMETER	152 MM

PORTABLE GENERATOR – PLUG OUTLET

GENERATOR TYPE	20 kW/ 240 V 3 PH
FUEL TYPE	DIESEL

BY–PASS PUMP REQUIRED

PUMP TYPE	4–IN DIESEL SELF PRIMING PUMP

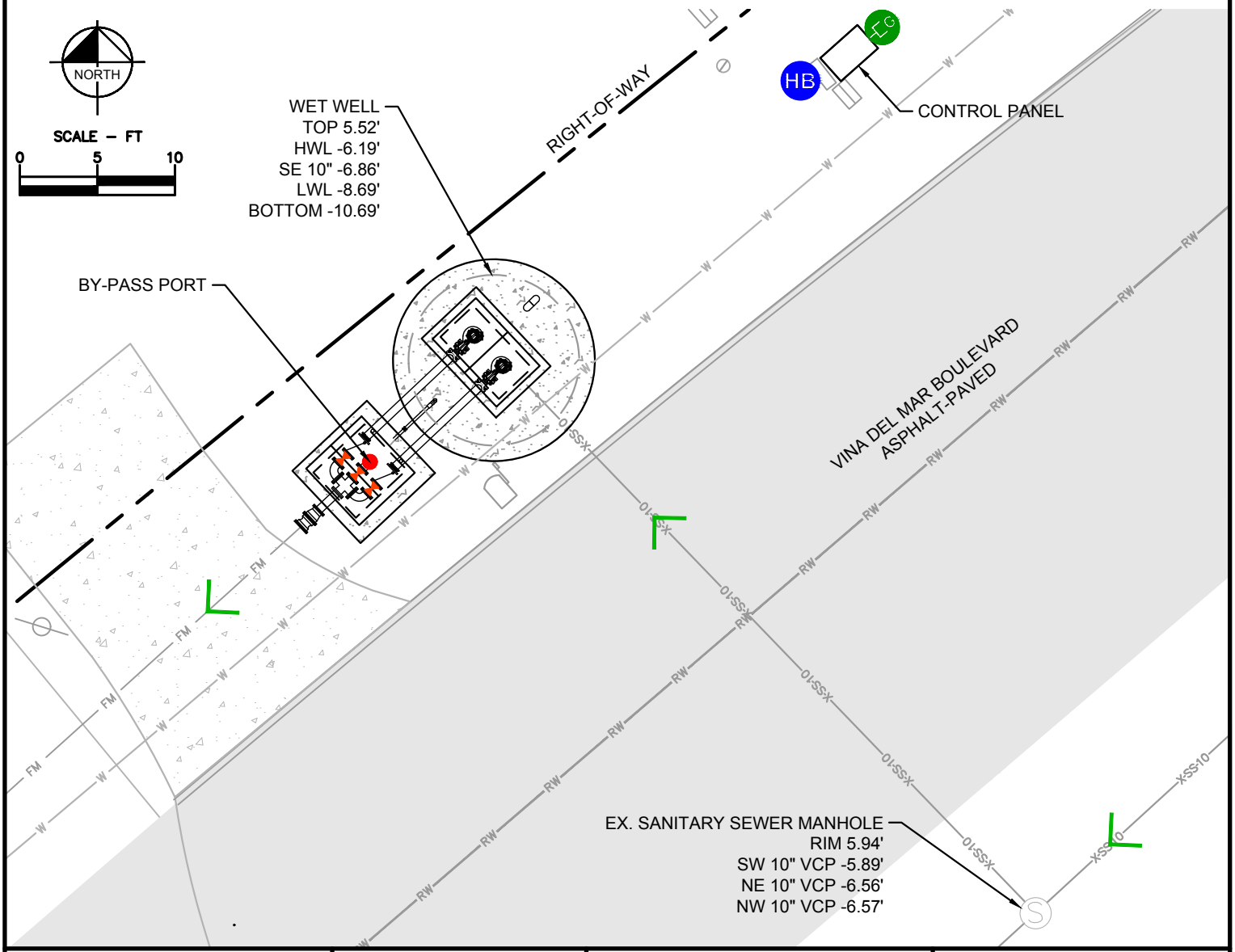

LIFT STATION 6 EXHIBIT FID: LS006	St. Pete Beach The Sunset Capital of Florida	Kimley»Horn	MAY 2021

SITE ADDRESS (ELECTRICAL BILLING ADDRESS): 125 44TH AVENUE ST. PETE BEACH, FL 33706	# LIFT STATION 7 INFORMATION EXHIBIT	NEAREST ADDRESS: 135 44TH AVENUE ST. PETE BEACH, FL 33706

WET WELL

WET WELL DEPTH	16 FT
WET WELL DIAMETER	12.5 FT
APPROX. WET WELL STORAGE*	3,116 GAL

*CALCULATED FROM LOW WATER LEVEL TO TOP OF WET WELL

FORCE MAIN

FORCE MAIN SIZE/MATERIAL	8-IN PVC
BY-PASS PORT SIZE	4-IN CAMLOCK
ARVS TO BE MAINTAINED	0

VFDs INSTALLED FOR FLOW CONTROL

LIFT STATION PUMPS

PUMP MODEL & HP	FLYGT NP 3127/7.5 HP
YEAR OF PUMP INSTALLATION	2021
EST. YEAR OF PUMP OVERHAUL	2031
NUMBER OF PUMPS	2
DESIGN POINT	800 GPM @ 20 FT TDH
IMPELLER DIAMETER	188 MM

PORTABLE GENERATOR – PLUG OUTLET

GENERATOR TYPE	20 kW/ 240 V 3 PH
FUEL TYPE	DIESEL

BY-PASS PUMP REQUIRED

PUMP TYPE	4-IN DIESEL SELF PRIMING PUMP

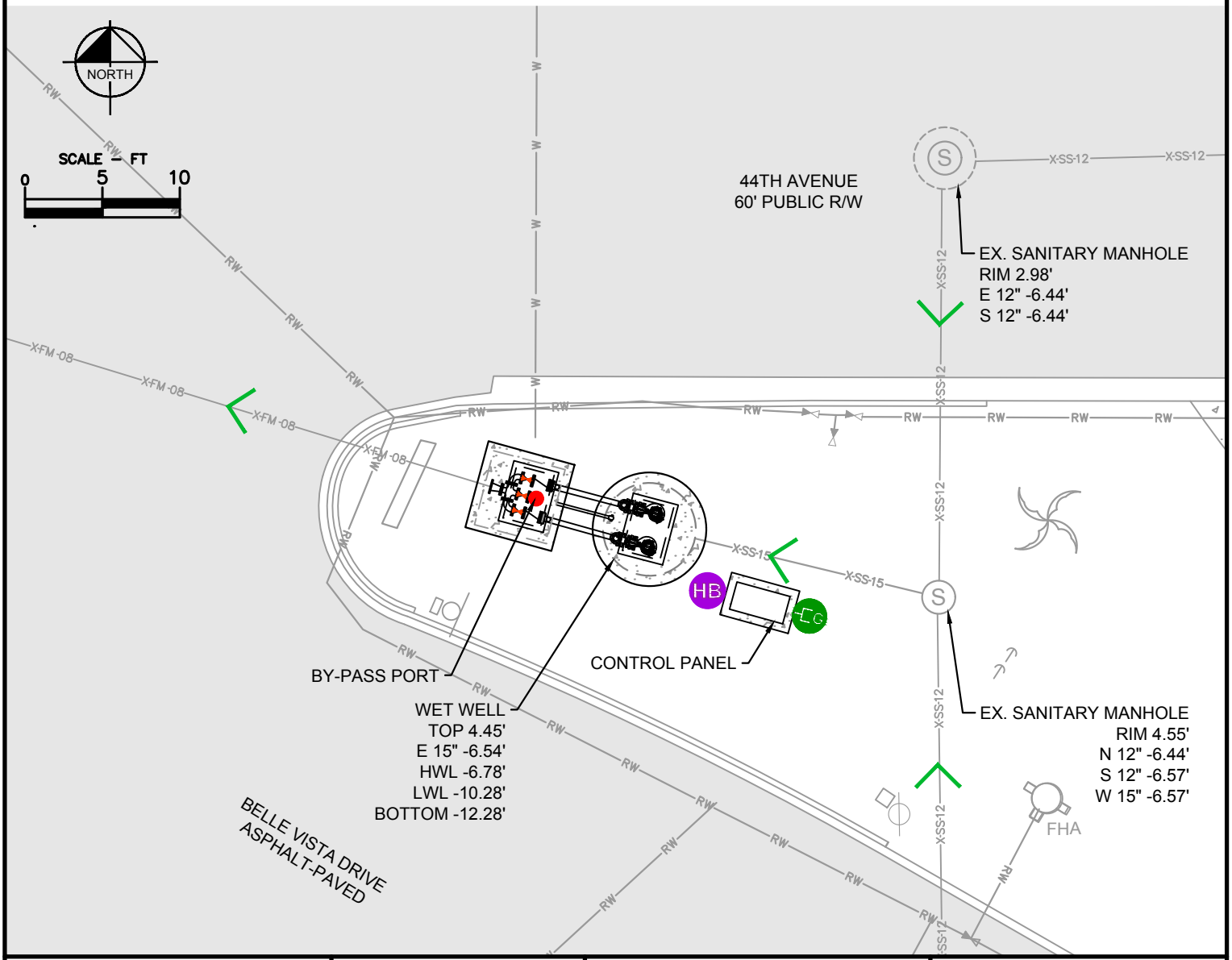

LIFT STATION 7 EXHIBIT FID: LS007	St. Pete Beach The Sunset Capital of Florida	Kimley»Horn	MAY 2021

SITE ADDRESS
(ELECTRICAL BILLING ADDRESS):
00 39TH AVENUE
ST. PETE BEACH, FL 33706

LIFT STATION 8
INFORMATION EXHIBIT

NEAREST ADDRESS:
380 39TH AVENUE
ST. PETE BEACH, FL 33706

WET WELL

WET WELL DEPTH	16 FT
WET WELL DIAMETER	11 FT
APPROX. WET WELL STORAGE*	9,739 GAL

*CALCULATED FROM LOW WATER LEVEL TO TOP OF WET WELL

FORCE MAIN

FORCE MAIN SIZE/MATERIAL	8-IN CIP, 6-IN PVC
BY-PASS PORT SIZE	4-IN CAMLOCK
ARVS TO BE MAINTAINED	0

LIFT STATION PUMPS

PUMP MODEL & HP	FLYGT NP 3102/ 5 HP
YEAR OF PUMP INSTALLATION	2017
EST. YEAR OF PUMP OVERHAUL	2027
NUMBER OF PUMPS	2
DESIGN POINT	265 GPM @ 26 FT TDH
IMPELLER DIAMETER	152 MM

PORTABLE GENERATOR – PLUG OUTLET

GENERATOR TYPE	20 kW/ 240 V 3 PH
FUEL TYPE	DIESEL

BY-PASS PUMP REQUIRED

PUMP TYPE	4-IN DIESEL SELF PRIMING PUMP

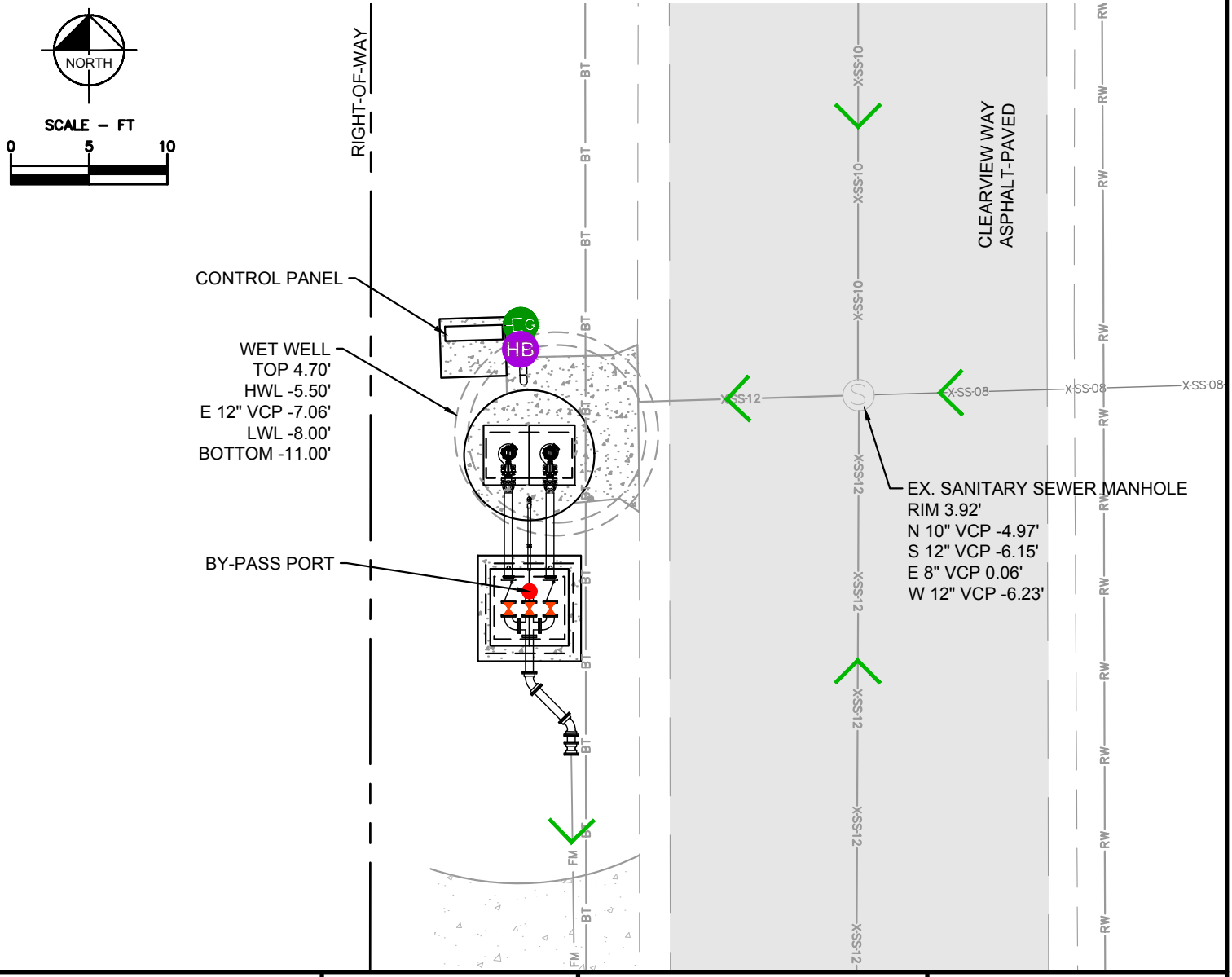

LIFT STATION 8 EXHIBIT
FID: LS008

St. Pete Beach
The Sunset Capital of Florida

Kimley»Horn

MAY 2021

SITE ADDRESS
(ELECTRICAL BILLING ADDRESS):
00 BOCA CIEGA ISLE DR.
ST. PETE BEACH, FL 33706

LIFT STATION 9 INFORMATION EXHIBIT

NEAREST ADDRESS:
1360 BOCA CIEGA ISLE DR.
ST. PETE BEACH, FL 33706

WET WELL

WET WELL DEPTH	13.69 FT
WET WELL DIAMETER	11 FT
APPROX. WET WELL STORAGE*	8,310 GAL

*CALCULATED FROM LOW WATER LEVEL TO TOP OF WET WELL

FORCE MAIN

FORCE MAIN SIZE/MATERIAL	6-IN PVC, 8-IN HDPE
BY-PASS PORT SIZE	4-IN CAMLOCK
ARVS TO BE MAINTAINED	1

LIFT STATION PUMPS

PUMP MODEL & HP	FLYGT NP 3102/ 5 HP
YEAR OF PUMP INSTALLATION	2014
EST. YEAR OF PUMP OVERHAUL	2024
NUMBER OF PUMPS	2
DESIGN POINT	410 GPM @ 17.6 FT TDH
IMPELLER DIAMETER	152 MM

PORTABLE GENERATOR – PLUG OUTLET

GENERATOR TYPE	20 kW/ 240 V 3 PH
FUEL TYPE	DIESEL

BY-PASS PUMP REQUIRED

PUMP TYPE	4-IN DIESEL SELF PRIMING PUMP

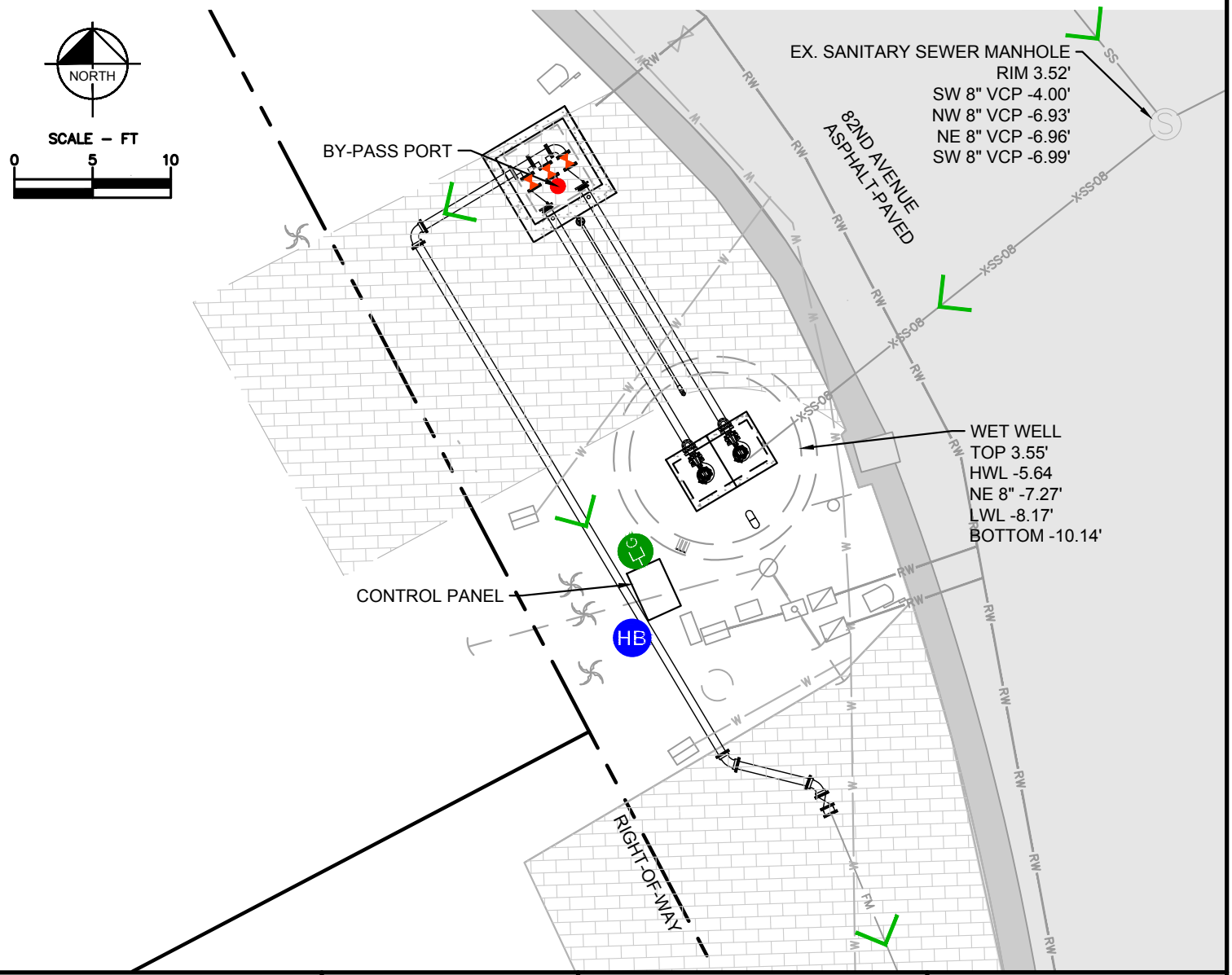

LIFT STATION 9 EXHIBIT
FID: LS009

St. Pete Beach
The Sunset Capital of Florida

Kimley»Horn

MAY 2021

SITE ADDRESS (ELECTRICAL BILLING ADDRESS): 00 SUNSET WAY ST. PETE BEACH, FL 33706	LIFT STATION 10 INFORMATION EXHIBIT	NEAREST ADDRESS: 7398 SUNSET WAY ST. PETE BEACH, FL 33706

WET WELL

WET WELL DEPTH	15 FT
WET WELL DIAMETER	12 FT
APPROX. WET WELL STORAGE*	7,050 GAL

*CALCULATED FROM LOW WATER LEVEL TO TOP OF WET WELL

FORCE MAIN

FORCE MAIN SIZE/MATERIAL	8-IN CIP, 8-IN DIP
BY-PASS PORT SIZE	4-IN CAMLOCK
ARVS TO BE MAINTAINED	0

VFDs INSTALLED FOR FLOW CONTROL

LIFT STATION PUMPS

PUMP MODEL & HP	FLYGT NP 3153/12 HP
YEAR OF PUMP INSTALLATION	2021
EST. YEAR OF PUMP OVERHAUL	2031
NUMBER OF PUMPS	2
DESIGN POINT	780 GPM @ 36 FT TDH
IMPELLER DIAMETER	194 MM

PORTABLE GENERATOR – PLUG OUTLET

GENERATOR TYPE	20 kW/ 240 V 3 PH
FUEL TYPE	DIESEL

BY-PASS PUMP REQUIRED

PUMP TYPE	4-IN DIESEL SELF PRIMING PUMP

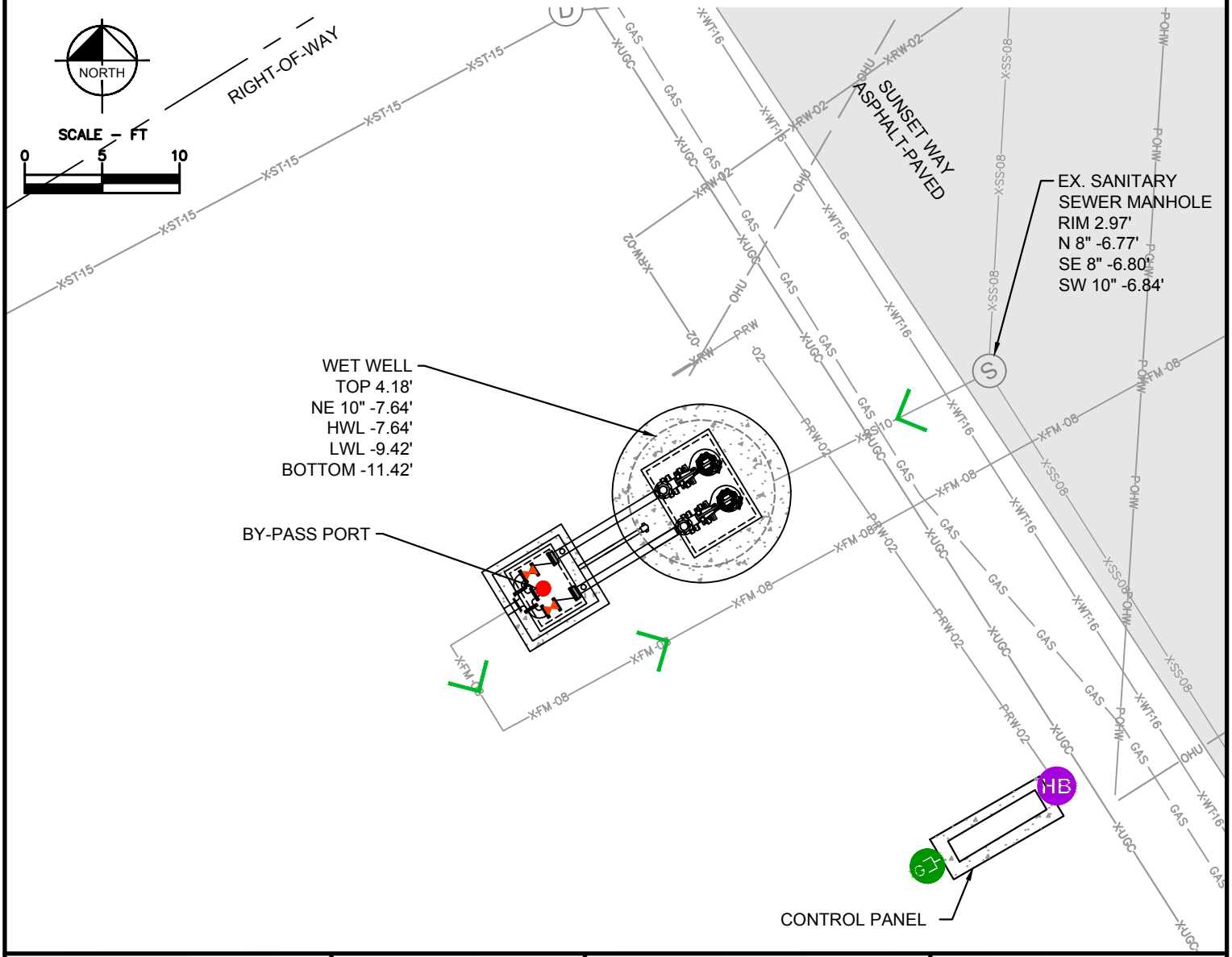

LIFT STATION 10 EXHIBIT FID: LS010	St. Pete Beach The Sunset Capital of Florida	Kimley»Horn	MAY 2021

SITE ADDRESS
(ELECTRICAL BILLING ADDRESS):
00 82ND AVE.
ST. PETE BEACH, FL 33706

LIFT STATION 11 INFORMATION EXHIBIT

NEAREST ADDRESS:
490 82ND AVE
ST. PETE BEACH, FL 33706

WET WELL

WET WELL DEPTH	14.6 FT
WET WELL DIAMETER	11 FT
APPROX. WET WELL STORAGE*	10,023 GAL

*CALCULATED FROM LOW WATER LEVEL TO TOP OF WET WELL

FORCE MAIN

FORCE MAIN SIZE/MATERIAL	6-IN CIP
BY-PASS PORT SIZE	4-IN CAMLOCK
ARVS TO BE MAINTAINED	0

LIFT STATION PUMPS

PUMP MODEL & HP	FLYGT NP 3102/ 5 HP
YEAR OF PUMP INSTALLATION	2020
EST. YEAR OF PUMP OVERHAUL	2030
NUMBER OF PUMPS	2
DESIGN POINT	280 GPM @ 23 FT TDH
IMPELLER DIAMETER	152 MM

PORTABLE GENERATOR – PLUG OUTLET

GENERATOR TYPE	20 kW/ 240 V 3 PH
FUEL TYPE	DIESEL

BY-PASS PUMP REQUIRED

PUMP TYPE	4-IN DIESEL SELF PRIMING PUMP

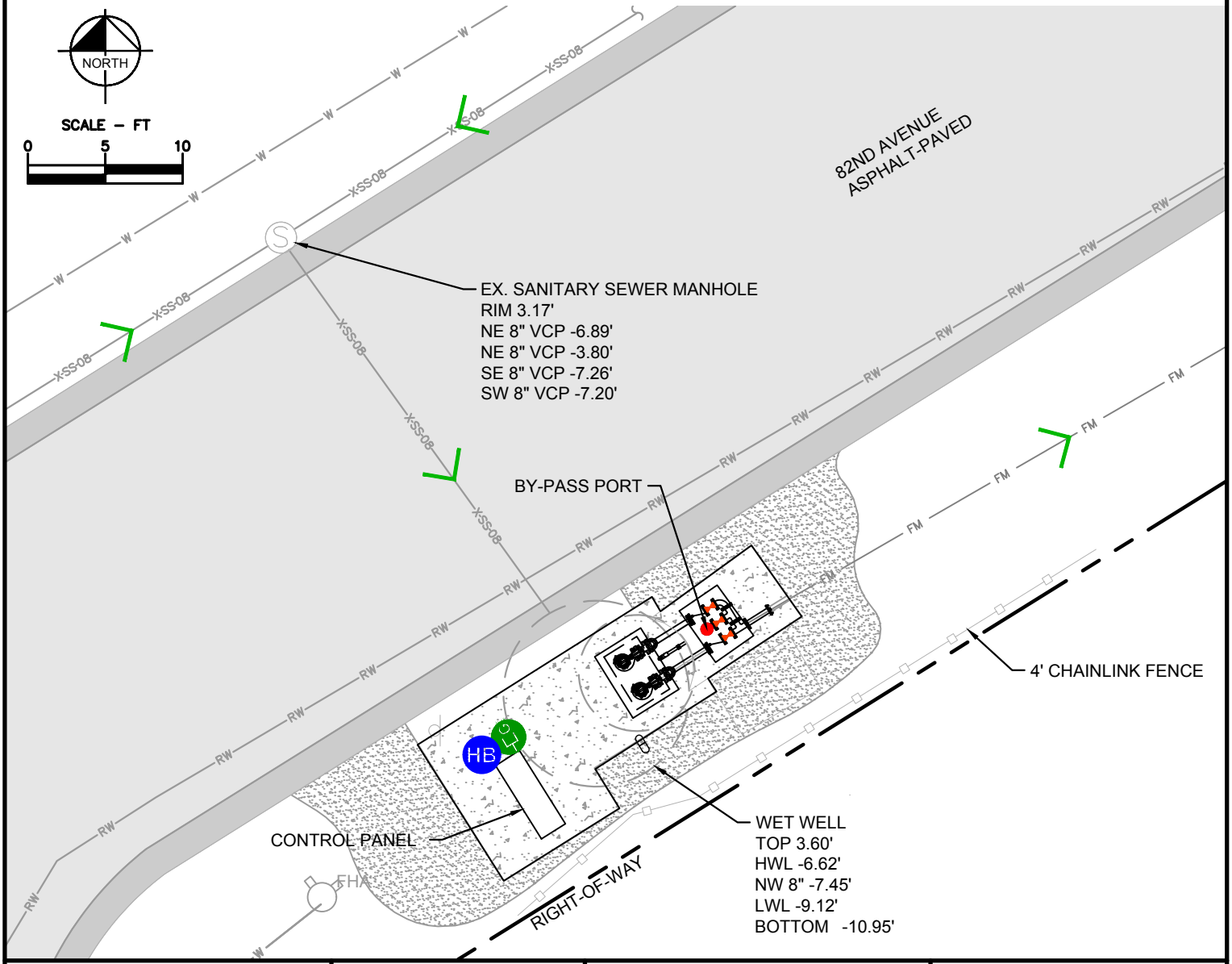

LIFT STATION 11 EXHIBIT
FID: LS011

St. Pete Beach
The Sunset Capital of Florida

Kimley»Horn

MAY 2021

SITE ADDRESS
(ELECTRICAL BILLING ADDRESS):
00 93RD AVENUE
ST. PETE BEACH, FL 33706

LIFT STATION 12 INFORMATION EXHIBIT

NEAREST ADDRESS:
401 93RD AVENUE
ST. PETE BEACH, FL 33706

WET WELL

WET WELL DEPTH	16 FT
WET WELL DIAMETER	11 FT
APPROX. WET WELL STORAGE*	10,024 GAL

*CALCULATED FROM LOW WATER LEVEL TO TOP OF WET WELL

FORCE MAIN

FORCE MAIN SIZE/MATERIAL	8-IN CIP
BY-PASS PORT SIZE	4-IN CAMLOCK
ARVS TO BE MAINTAINED	0

LIFT STATION PUMPS

PUMP MODEL & HP	FLYGT NP 3102/ 5 HP
YEAR OF PUMP INSTALLATION	2014
EST. YEAR OF PUMP OVERHAUL	2024
NUMBER OF PUMPS	2
DESIGN POINT	390 GPM @ 18.4 FT TDH
IMPELLER DIAMETER	152 MM

PORTABLE GENERATOR – PLUG OUTLET

GENERATOR TYPE	20 kW/ 240 V 3 PH
FUEL TYPE	DIESEL

BY-PASS PUMP REQUIRED

PUMP TYPE	4-IN DIESEL SELF PRIMING PUMP

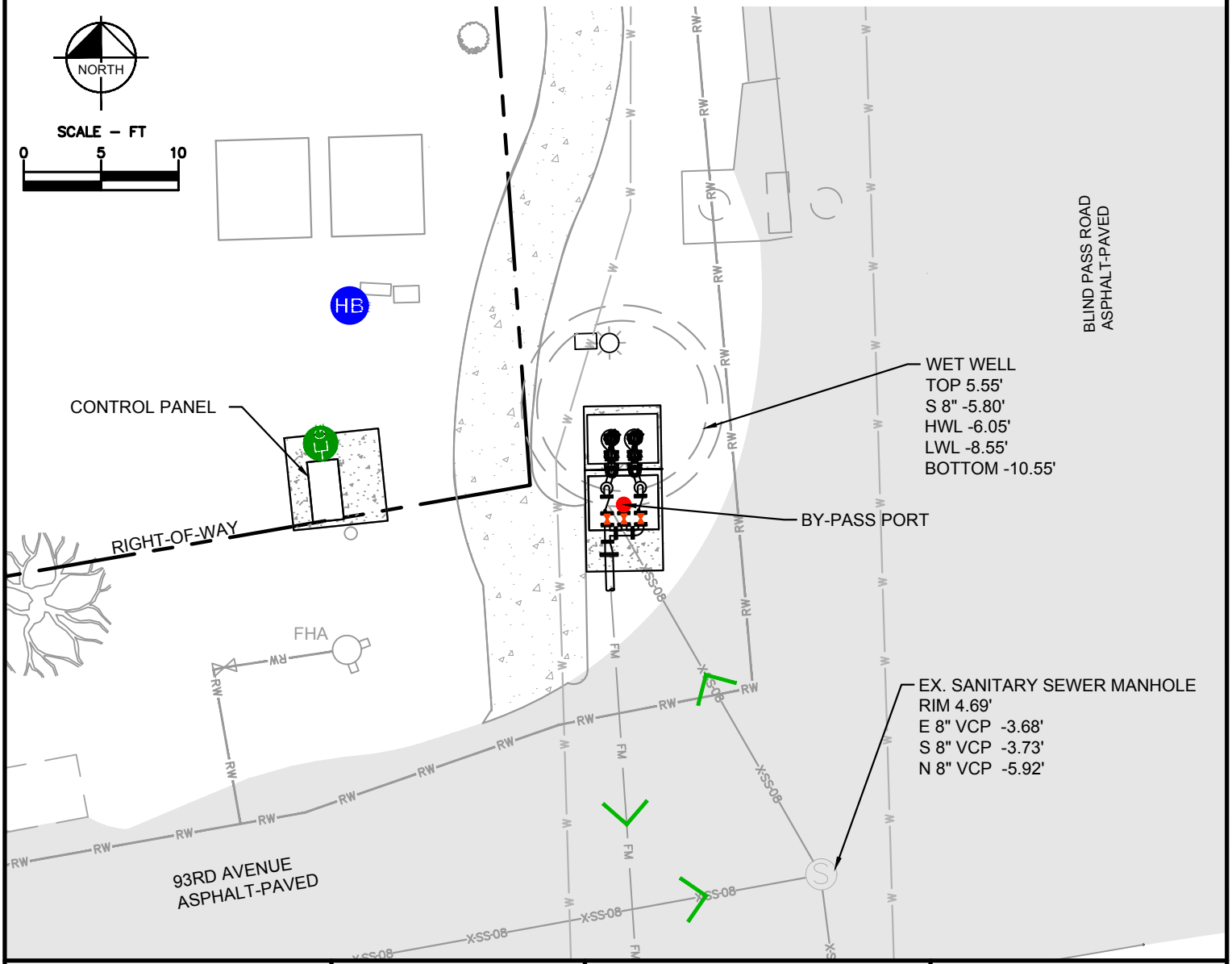

LIFT STATION 12 EXHIBIT
FID: LS012

St. Pete Beach
The Sunset Capital of Florida

Kimley»Horn

MAY 2021

SITE ADDRESS (ELECTRICAL BILLING ADDRESS): 00 PALI WAY ST. PETE BEACH, FL 33706	# LIFT STATION 13 INFORMATION EXHIBIT	APPROXIMATE ADDRESS: 5411 PALI WAY ST. PETE BEACH, FL 33706

WET WELL

WET WELL DEPTH	15 FT
WET WELL DIAMETER	12 FT
APPROX. WET WELL STORAGE*	8,964 GAL

*CALCULATED FROM LOW WATER LEVEL TO TOP OF WET WELL

FORCE MAIN

FORCE MAIN SIZE/MATERIAL	4-IN CIP
BY-PASS PORT SIZE	4-IN CAMLOCK
ARVS TO BE MAINTAINED	0

LIFT STATION PUMPS

PUMP MODEL & HP	FLYGT NP 3102/ 5 HP
YEAR OF PUMP INSTALLATION	2020
EST. YEAR OF PUMP OVERHAUL	2030
NUMBER OF PUMPS	2
DESIGN POINT	220 GPM 26 FT TDH
IMPELLER DIAMETER	152 MM

PORTABLE GENERATOR – PLUG OUTLET

GENERATOR TYPE	20 kW/ 240 V 3 PH
FUEL TYPE	DIESEL

BY-PASS PUMP REQUIRED

PUMP TYPE	4-IN DIESEL SELF PRIMING PUMP

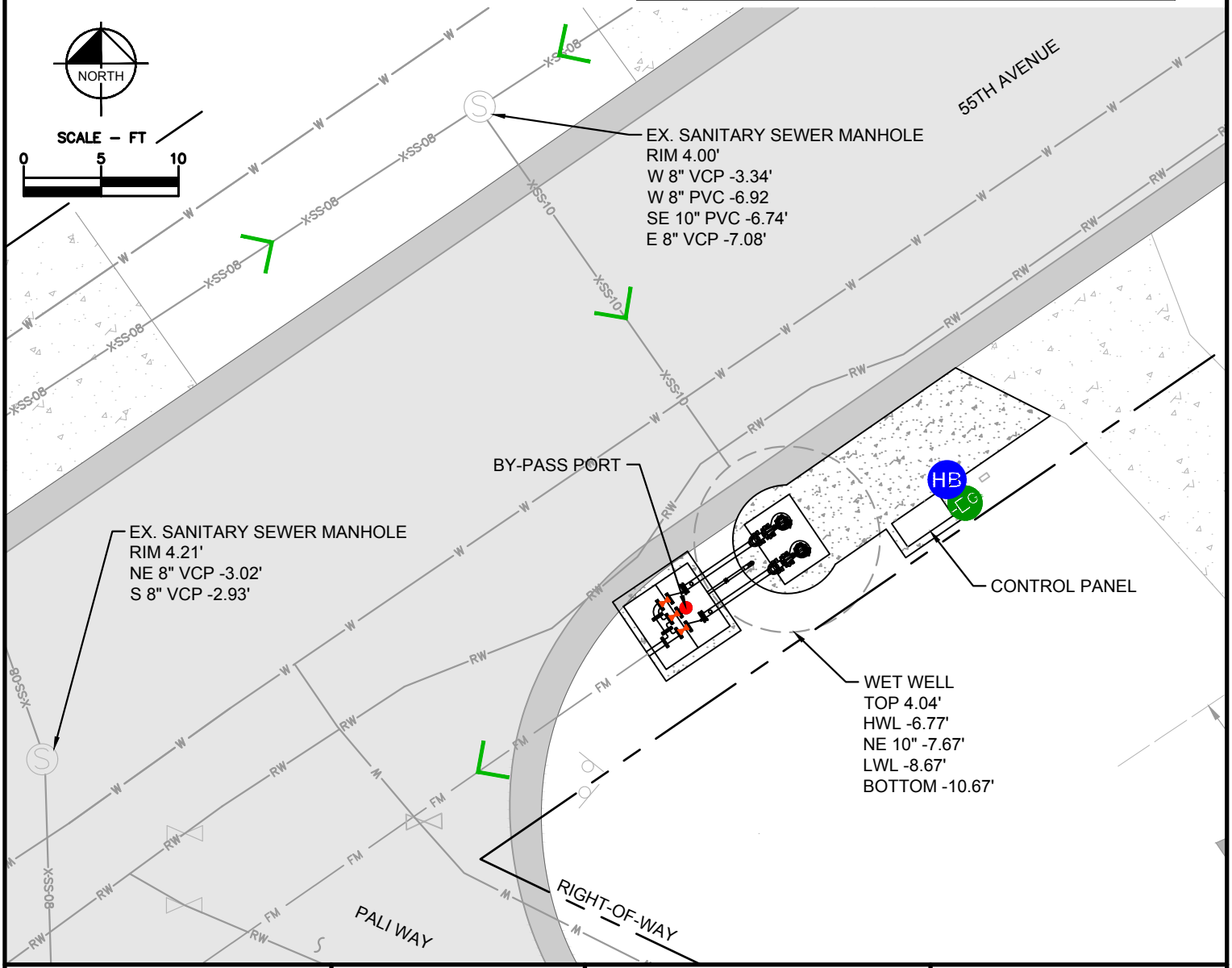

LIFT STATION 13 EXHIBIT FID: LS013	St. Pete Beach The Sunset Capital of Florida	Kimley»Horn	MAY 2021

SITE ADDRESS
(ELECTRICAL BILLING ADDRESS):
00 64TH AVENUE
ST. PETE BEACH, FL 33706

LIFT STATION 14 INFORMATION EXHIBIT

APPROXIMATE ADDRESS:
500 64TH AVENUE
ST. PETE BEACH, FL 33706

WET WELL

WET WELL DEPTH	17.6 FT
WET WELL DIAMETER	11 FT
APPROX. WET WELL STORAGE*	11,054 GAL

*CALCULATED FROM LOW WATER LEVEL TO TOP OF WET WELL

FORCE MAIN

FORCE MAIN SIZE/MATERIAL	6–IN CIP
BY–PASS PORT SIZE	4–IN CAMLOCK
ARVS TO BE MAINTAINED	0

LIFT STATION PUMPS

PUMP MODEL & HP	FLYGT NP 3102/ 5 HP
YEAR OF PUMP INSTALLATION	2020
EST. YEAR OF PUMP OVERHAUL	2030
NUMBER OF PUMPS	2
DESIGN POINT	300 GPM 34 FT TDH
IMPELLER DIAMETER	152 MM

PORTABLE GENERATOR – PLUG OUTLET

GENERATOR TYPE	20 kW/ 240 V 3 PH
FUEL TYPE	DIESEL

BY–PASS PUMP REQUIRED

PUMP TYPE	4–IN DIESEL SELF PRIMING PUMP

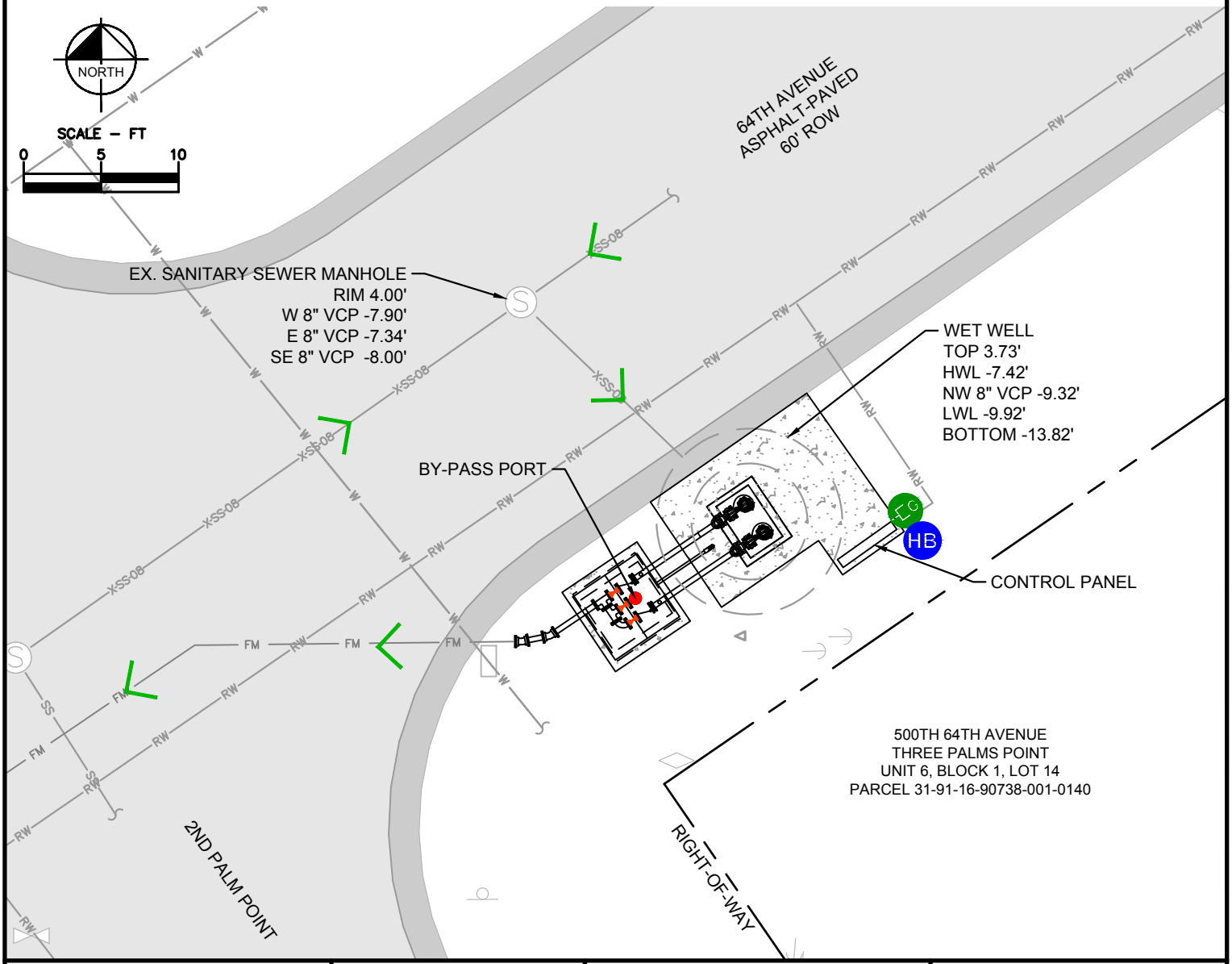

LIFT STATION 14 EXHIBIT

FID: LS014

St. Pete Beach
The Sunset Capital of Florida

Kimley»Horn

MAY 2021

SITE ADDRESS
(ELECTRICAL BILLING ADDRESS):
00 59TH AVENUE
ST. PETE BEACH, FL 33706

LIFT STATION 15 INFORMATION EXHIBIT

NEAREST ADDRESS:
650 59TH AVENUE
ST. PETE BEACH, FL 33706

WET WELL

WET WELL DEPTH	16.2 FT
WET WELL DIAMETER	5 FT
APPROX. WET WELL STORAGE*	2,085 GAL

*CALCULATED FROM LOW WATER LEVEL TO TOP OF WET WELL

FORCE MAIN

FORCE MAIN SIZE/MATERIAL	6-IN CIP
BY-PASS PORT SIZE	4-IN CAMLOCK
ARVS TO BE MAINTAINED	0

LIFT STATION PUMPS

PUMP MODEL & HP	FLYGT NP 3102/ 5 HP
YEAR OF PUMP INSTALLATION	2020
EST. YEAR OF PUMP OVERHAUL	2030
NUMBER OF PUMPS	2
DESIGN POINT	110 GPM 29 FT TDH
IMPELLER DIAMETER	152 MM

PORTABLE GENERATOR – PLUG OUTLET

GENERATOR TYPE	20 kW/ 240 V 3 PH
FUEL TYPE	DIESEL

BY-PASS PUMP REQUIRED

PUMP TYPE	4-IN DIESEL SELF PRIMING PUMP

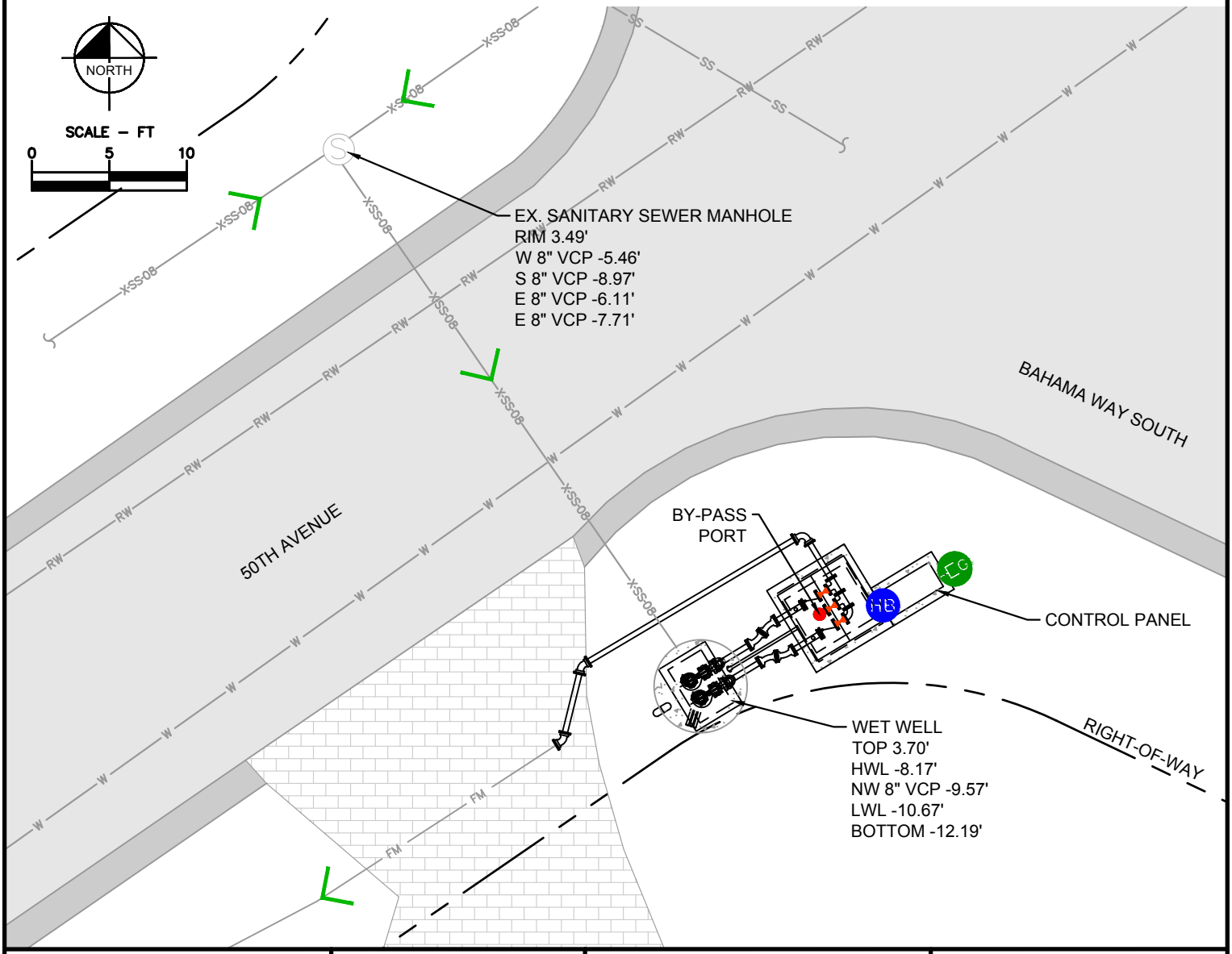

LIFT STATION 15 EXHIBIT
FID: LS015

St. Pete Beach
The Sunset Capital of Florida

Kimley»Horn

MAY 2021

SITE ADDRESS
(ELECTRICAL BILLING ADDRESS):
00 MILLER DRIVE
ST. PETE BEACH, FL 33706

LIFT STATION 16 INFORMATION EXHIBIT

NEAREST ADDRESS:
4104 MILLER DRIVE
ST. PETE BEACH, FL 33706

WET WELL

WET WELL DEPTH	16 FT
WET WELL DIAMETER	5 FT
APPROX. WET WELL STORAGE*	2,085 GAL

*CALCULATED FROM LOW WATER LEVEL TO TOP OF WET WELL

FORCE MAIN

FORCE MAIN SIZE/MATERIAL	4–IN PVC, 6–IN HDPE
BY–PASS PORT SIZE	4–IN CAMLOCK
ARVS TO BE MAINTAINED	1

LIFT STATION PUMPS

PUMP MODEL & HP	FLYGT NP 3102/ 5 HP
YEAR OF PUMP INSTALLATION	2017
EST. YEAR OF PUMP OVERHAUL	2027
NUMBER OF PUMPS	2
DESIGN POINT	138 GPM @ 31.5 FT TDH
IMPELLER DIAMETER	152 MM

PORTABLE GENERATOR – PLUG OUTLET

GENERATOR TYPE	20 kW/ 240 V 3 PH
FUEL TYPE	DIESEL

BY–PASS PUMP REQUIRED

PUMP TYPE	4–IN DIESEL SELF PRIMING PUMP

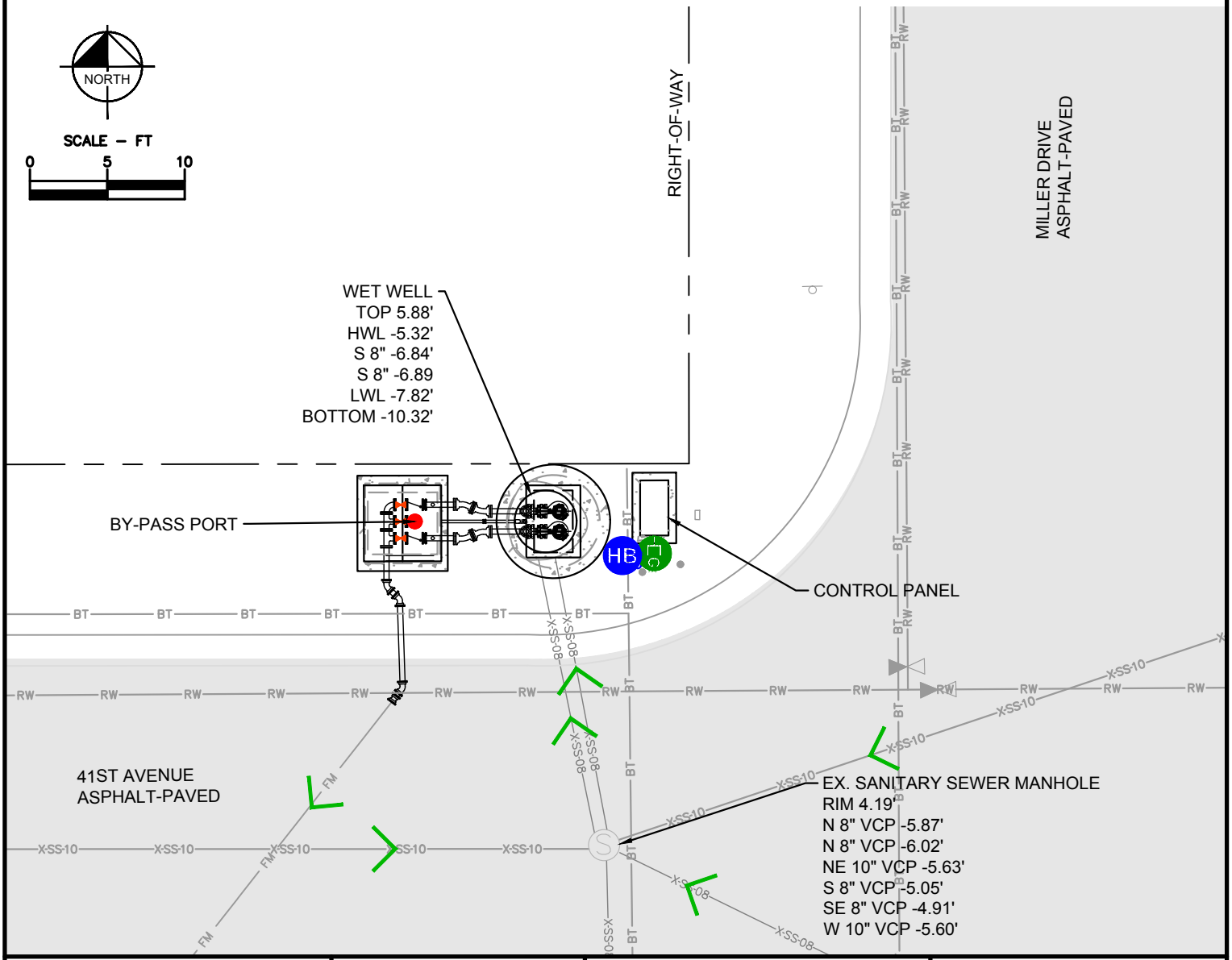

LIFT STATION 16 EXHIBIT

FID: LS016

St. Pete Beach
The Sunset Capital of Florida

Kimley»Horn

MAY 2021

SITE ADDRESS (ELECTRICAL BILLING ADDRESS): 00 ALTON DRIVE ST. PETE BEACH, FL 33706	# LIFT STATION 17 INFORMATION EXHIBIT	NEAREST ADDRESS: 2910 ALTON DRIVE ST. PETE BEACH, FL 33706

WET WELL

WET WELL DEPTH	17 FT
WET WELL DIAMETER	6 FT
APPROX. WET WELL STORAGE*	3,166 GAL

*CALCULATED FROM LOW WATER LEVEL TO TOP OF WET WELL

FORCE MAIN

FORCE MAIN SIZE/MATERIAL	8–IN DIP
BY–PASS PORT SIZE	4–IN CAMLOCK
ARVS TO BE MAINTAINED	1

VFDs INSTALLED FOR CONVERSION TO 3–PHASE POWER

LIFT STATION PUMPS

PUMP MODEL & HP	FLYGT NP 3102/5 HP
YEAR OF PUMP INSTALLATION	2020
EST. YEAR OF PUMP OVERHAUL	2030
NUMBER OF PUMPS	2
DESIGN POINT	240 GPM @ 25 FT TDH
IMPELLER DIAMETER	152 MM

PORTABLE GENERATOR – PLUG OUTLET

GENERATOR TYPE	7–7.4 kW/ 240V 1 PH
FUEL TYPE	DIESEL

BY–PASS PUMP REQUIRED

PUMP TYPE	4–IN DIESEL SELF PRIMING PUMP

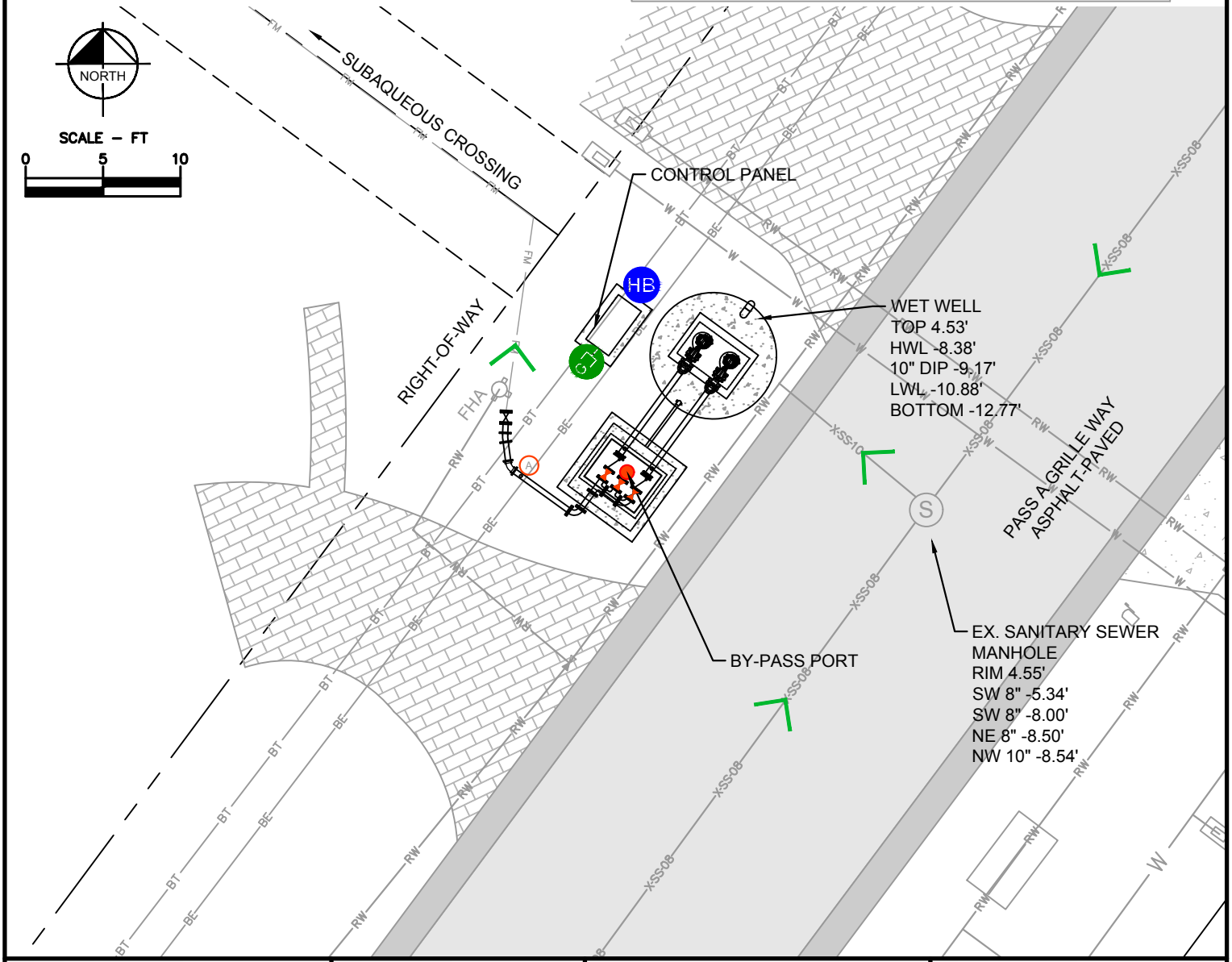

LIFT STATION 17 EXHIBIT FID: LS017	St. Pete Beach The Sunset Capital of Florida	Kimley»Horn	MAY 2021

SITE ADDRESS
(ELECTRICAL BILLING ADDRESS):
5850 GULF BOULEVARD
ST. PETE BEACH, FL 33706

LIFT STATION 18 INFORMATION EXHIBIT

NEAREST ADDRESS:
5800 GULF BOULEVARD
ST. PETE BEACH, FL 33706

WET WELL

WET WELL DEPTH	18 FT
WET WELL DIAMETER	8 FT
APPROX. WET WELL STORAGE*	6,066 GAL

*CALCULATED FROM LOW WATER LEVEL TO TOP OF WET WELL

FORCE MAIN

FORCE MAIN SIZE/MATERIAL	6-IN PVC
BY-PASS PORT SIZE	4-IN CAMLOCK
ARVS TO BE MAINTAINED	1

LIFT STATION PUMPS

PUMP MODEL & HP	FLYGT NP 3153/12 HP
YEAR OF PUMP INSTALLATION	2022
EST. YEAR OF PUMP OVERHAUL	2032
NUMBER OF PUMPS	2
DESIGN POINT	320 GPM @ 23 FT TDH
IMPELLER DIAMETER	194 MM

PORTABLE GENERATOR – PLUG OUTLET

GENERATOR TYPE	20 kW/ 240 V 3 PH
FUEL TYPE	DIESEL

BY-PASS PUMP REQUIRED

PUMP TYPE	4-IN DIESEL SELF PRIMING PUMP

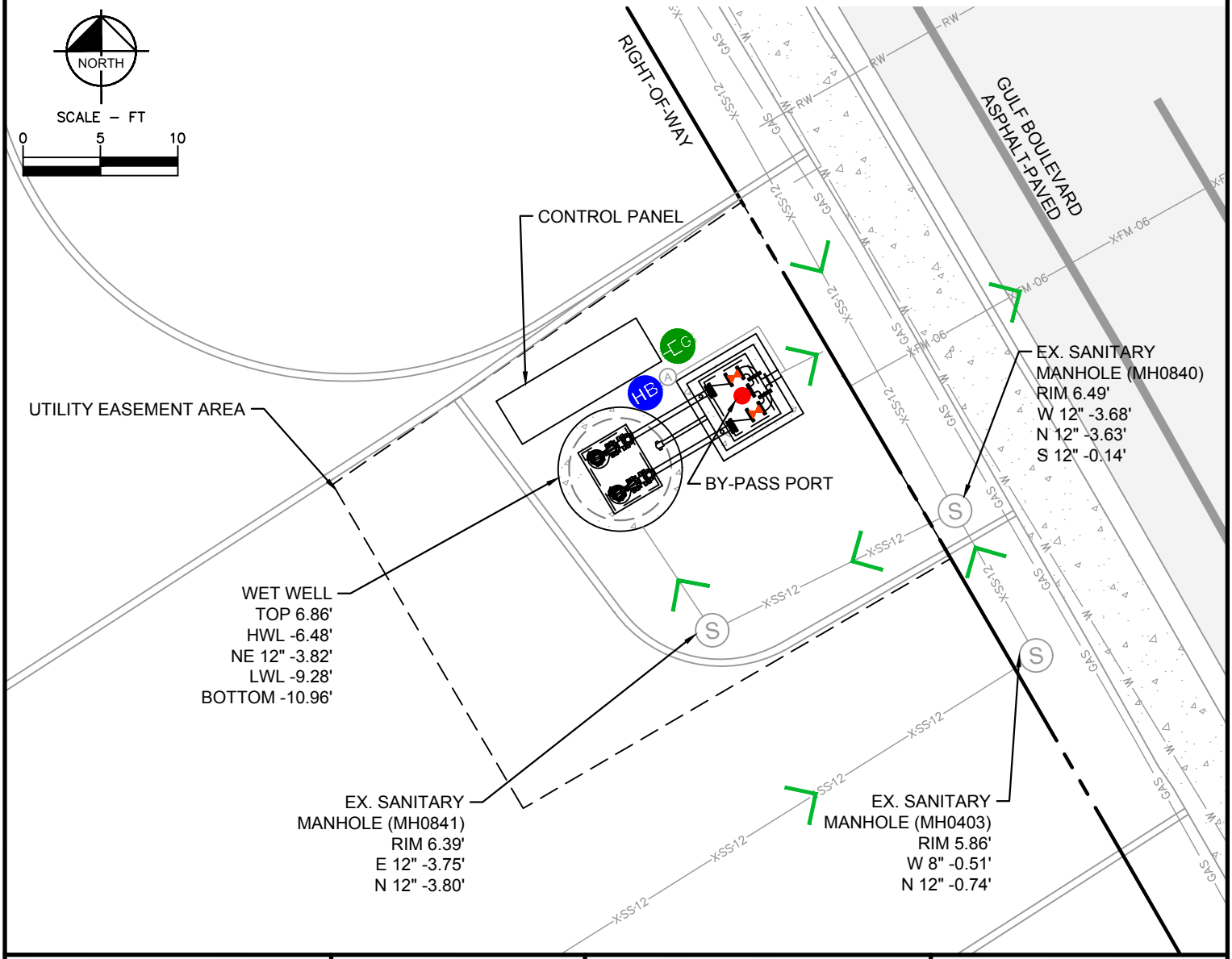

LIFT STATION 18 EXHIBIT

FID: LS018

St. Pete Beach
The Sunset Capital of Florida

Kimley»Horn

JANUARY 2023

SITE ADDRESS
(ELECTRICAL BILLING ADDRESS):
5450 GULF BOULEVARD
ST. PETE BEACH, FL 33706

LIFT STATION 19 INFORMATION EXHIBIT

NEAREST ADDRESS:
5500 GULF BOULEVARD
ST. PETE BEACH, FL 33706

WET WELL

WET WELL DEPTH	22 FT
WET WELL DIAMETER	8 FT
APPROX. WET WELL STORAGE*	7,009 GAL

*CALCULATED FROM LOW WATER LEVEL TO TOP OF WET WELL

FORCE MAIN

FORCE MAIN SIZE/MATERIAL	6–IN PVC
BY–PASS PORT SIZE	4–IN CAMLOCK
ARVS TO BE MAINTAINED	1

LIFT STATION PUMPS

PUMP MODEL & HP	FLYGT NP 3153/15 HP
YEAR OF PUMP INSTALLATION	2022
EST. YEAR OF PUMP OVERHAUL	2032
NUMBER OF PUMPS	2
DESIGN POINT	200 GPM @ 32 FT TDH
IMPELLER DIAMETER	239 MM

PORTABLE GENERATOR – PLUG OUTLET

GENERATOR TYPE	20 kW/ 240 V 3 PH
FUEL TYPE	DIESEL

BY–PASS PUMP REQUIRED

PUMP TYPE	4–IN DIESEL SELF PRIMING PUMP

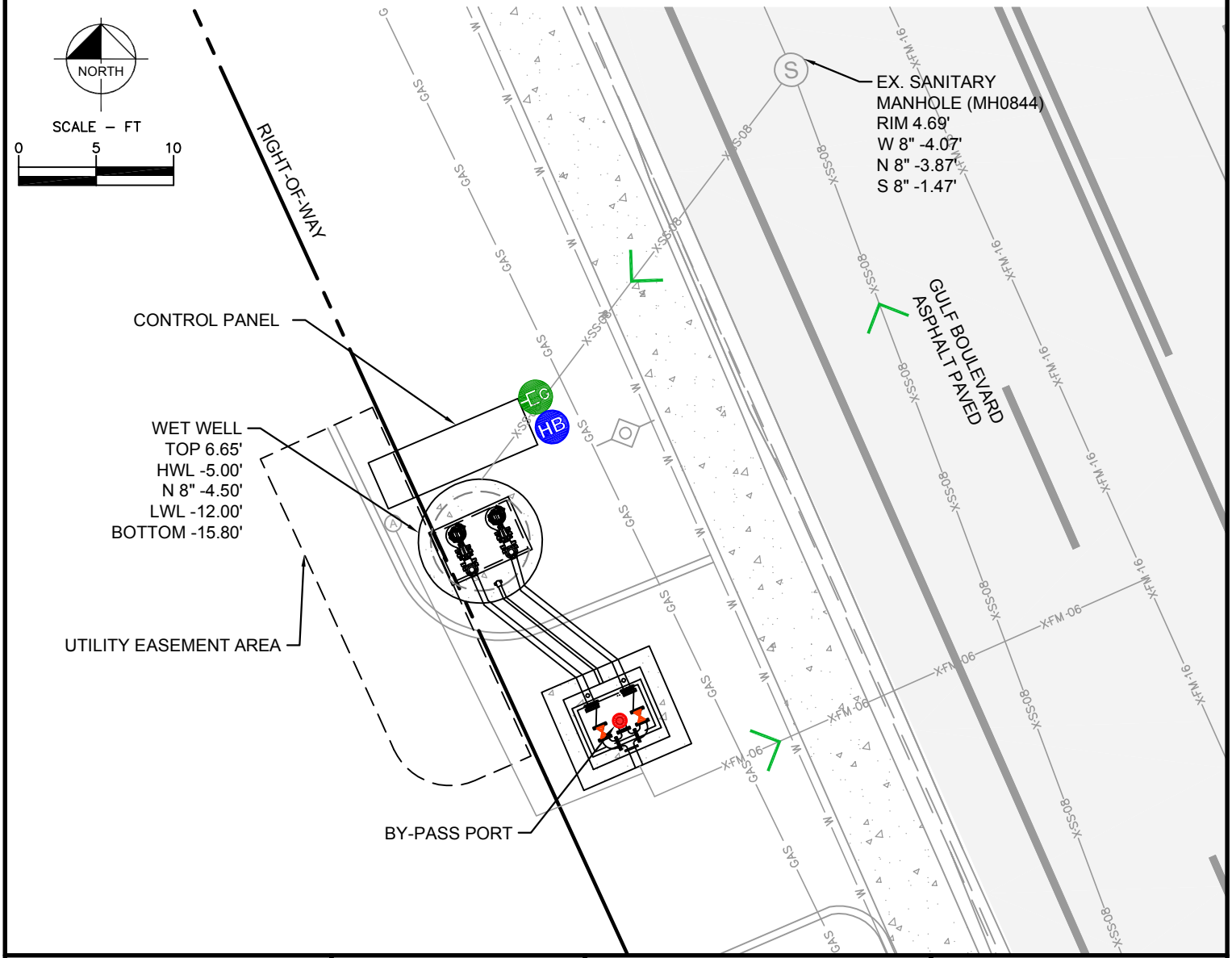

LIFT STATION 19 EXHIBIT
FID: LS019

St. Pete Beach
The Sunset Capital of Florida

Kimley»Horn

JANUARY 2023

SITE ADDRESS (ELECTRICAL BILLING ADDRESS): 5020 GULF BOULEVARD ST. PETE BEACH, FL 33706	# LIFT STATION 20 INFORMATION EXHIBIT	NEAREST ADDRESS: 5000 GULF BOULEVARD ST. PETE BEACH, FL 33706

WET WELL

WET WELL DEPTH	23 FT
WET WELL DIAMETER	8 FT
APPROX. WET WELL STORAGE*	7,201 GAL

*CALCULATED FROM LOW WATER LEVEL TO TOP OF WET WELL

FORCE MAIN

FORCE MAIN SIZE/MATERIAL	6–IN PVC
BY–PASS PORT SIZE	4–IN CAMLOCK
ARVS TO BE MAINTAINED	1

LIFT STATION PUMPS

PUMP MODEL & HP	FLYGT NP 3153/15 HP
YEAR OF PUMP INSTALLATION	2022
EST. YEAR OF PUMP OVERHAUL	2032
NUMBER OF PUMPS	2
DESIGN POINT	470 GPM @ 38 FT TDH
IMPELLER DIAMETER	253 MM

PORTABLE GENERATOR – PLUG OUTLET

GENERATOR TYPE	20 kW/ 240 V 3 PH
FUEL TYPE	DIESEL

BY–PASS PUMP REQUIRED

PUMP TYPE	4–IN DIESEL SELF PRIMING PUMP

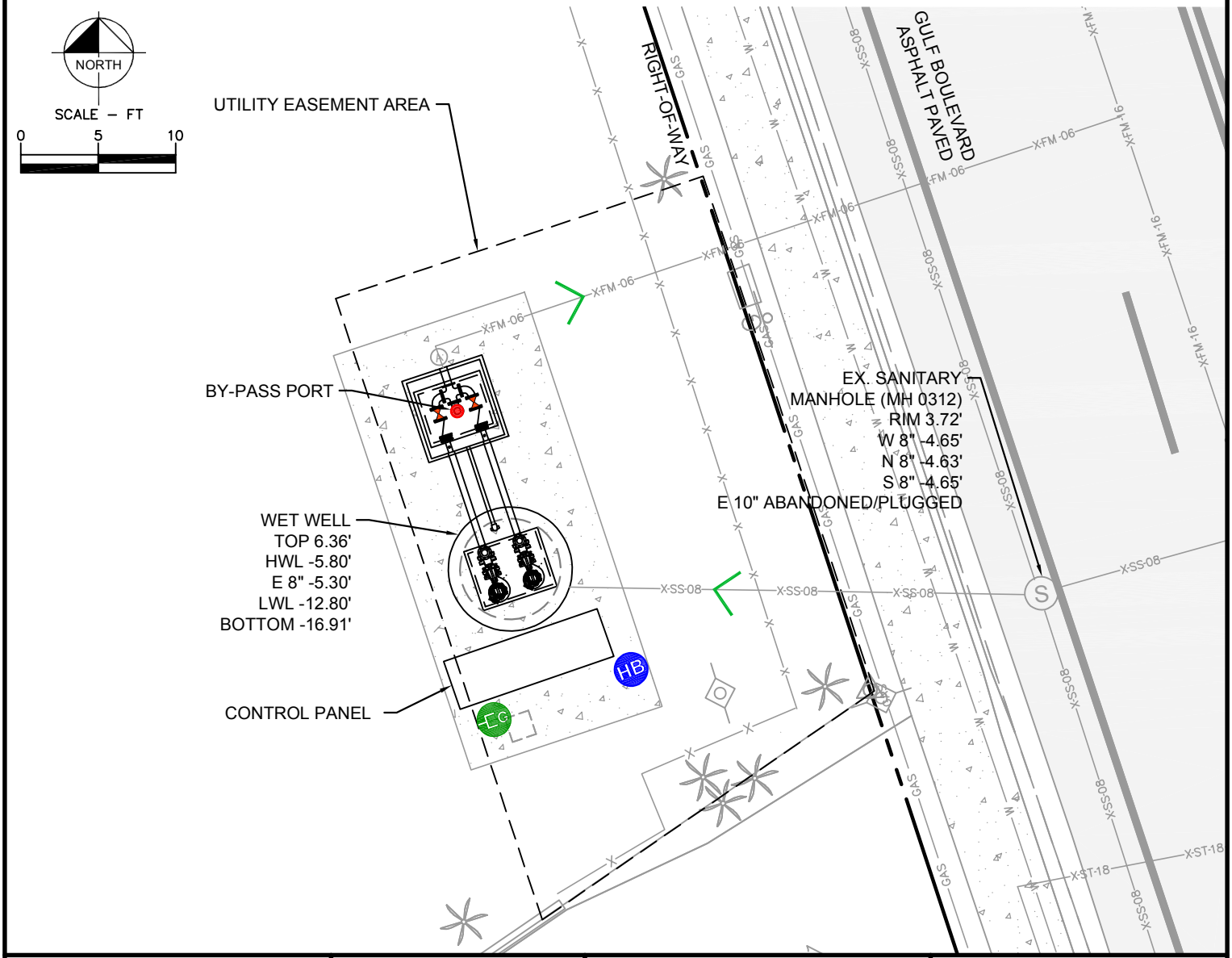

LIFT STATION 20 EXHIBIT FID: LS020	St. Pete Beach The Sunset Capital of Florida	Kimley»Horn	JANUARY 2023

SITE ADDRESS
(ELECTRICAL BILLING ADDRESS):
4400 GULF BOULEVARD
ST. PETE BEACH, FL 33706

LIFT STATION 21
INFORMATION EXHIBIT

NEAREST ADDRESS:
4350 GULF BOULEVARD
ST. PETE BEACH, FL 33706

WET WELL

WET WELL DEPTH	23 FT
WET WELL DIAMETER	8 FT
APPROX. WET WELL STORAGE*	6,994 GAL

*CALCULATED FROM LOW WATER LEVEL TO TOP OF WET WELL

FORCE MAIN

FORCE MAIN SIZE/MATERIAL	6-IN PVC
BY-PASS PORT SIZE	4-IN CAMLOCK
ARVS TO BE MAINTAINED	1

LIFT STATION PUMPS

PUMP MODEL & HP	FLYGT NP 3153/15 HP
YEAR OF PUMP INSTALLATION	2022
EST. YEAR OF PUMP OVERHAUL	2032
NUMBER OF PUMPS	2
DESIGN POINT	160 GPM @ 37 FT TDH
IMPELLER DIAMETER	239 MM

PORTABLE GENERATOR – PLUG OUTLET

GENERATOR TYPE	20 kW/ 240 V 3 PH
FUEL TYPE	DIESEL

BY-PASS PUMP REQUIRED

PUMP TYPE	4-IN DIESEL SELF PRIMING PUMP

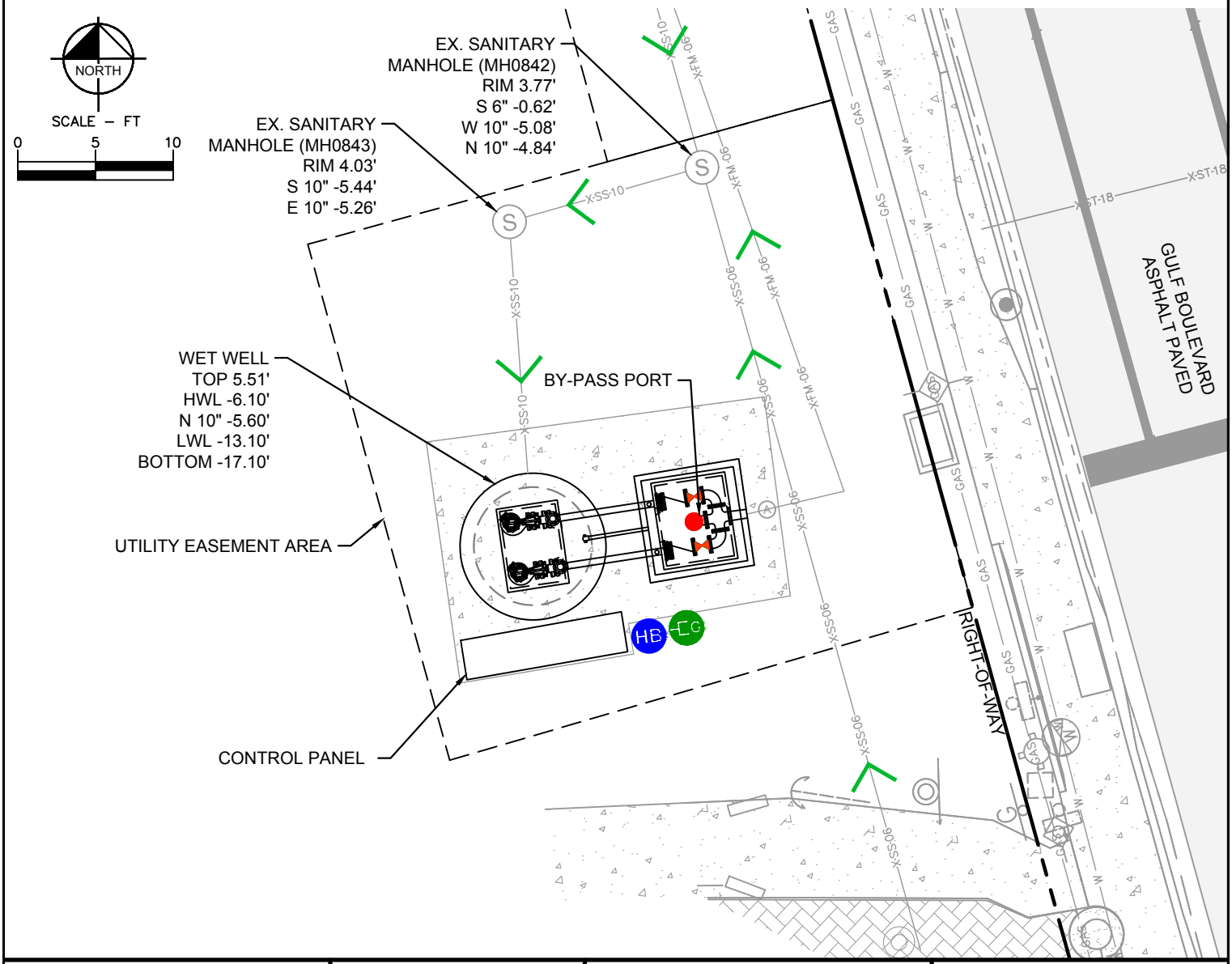

LIFT STATION 21 EXHIBIT
FID: LS0021

St. Pete Beach
The Sunset Capital of Florida

Kimley»Horn

JANUARY 2023

155 Corey Avenue
St. Pete Beach, FL 33706-1839
www.stpetebeach.org

ADDENDUM 4

Wastewater Lift Stations Rehabilitation

Issued 4/10/2026

*Note that this Addendum **DOES** change the bid due date and time as stated in the above referenced RFB. Sealed bids must be received by **9:00 AM on 05/06/2026** electronically via Bonfire. They will be publicly opened and read at **11:00 AM on 05/06/2026.** All bidders are invited to attend this bid opening. Bids received after the deadline will not be accepted.*

Addendum 4 includes:

1. Extension of bid due date to **9:00 AM ET on 05/06/2026**
2. Future addition to Scope: The City will be publishing another addendum the week of 04/20/2026 to add Lift Station 7 to the bid.

155 Corey Avenue
St. Pete Beach, FL 33706-1839
www.stpetebeach.org

ADDENDUM 5

Wastewater Lift Stations Rehabilitation

Issued 4/24/2026

*Sealed bids must be received by **9:00 AM on 05/06/2026** electronically via Bonfire. They will be publicly opened and read at **11:00 AM on 05/06/2026.** All bidders are invited to attend this bid opening. Bids received after the deadline will not be accepted.*

Addendum 5 includes:

1. The overall summary of changes
2. Updated Bid Form
3. Lift Station 7 Rehab Plans including landscaping and irrigation
4. Modified Electrical Sheets
5. Added flow meter replacement sheets for Pump Stations 2 and 3
6. Updated Pay Item Descriptions

1. Overall Summary of Changes (behind this page)

City of St. Pete Beach

Lift Station Rehabilitation (LS 4, 5, 7, 9, 10, 11, 12, 13, 14, 15, 16 and SW LS 35)

Addendum #5

Summary of Changes

A. **The following plan sheets have been revised in per the City's request to modify electrical improvements:**

- **Revised: E-03, E-05, E-07, E-09, E-11, E-13, E-15, E-17, E-19, E-21, E-28, E-29, E-32, E-33, E-36, E-37, & E-38**

B. **The following plan sheets have been added/revised perthe City's request to include Lift Station 07 Improvements into the scope of work:**

- **Added: LS-7-01, LS-7-02, LS-7-03, L-01, L-02, L-03, IR-01, IR-02, IR-03**
- **Revised: S-1.1**

C. **The following plan sheets have been revised in accordance with the City's request to include Pump Station 2 and Pump Station 3 flow meter replacements into the scope of work:**

- **Added: PS2-1, PS3-1**

D. **The following sections of the Specifications has been revised in accordance with the responses to the bid questions:**

- **Specification Section 02 – Pay Item Descriptions; Bid Item 7 has been modified. Bid Items 25, 26, 27, and 28 are now included.**

E. **The following Bid Form Items have been revised in accordance with the responses to the bid questions:**

- **The following bid items have been added:**
  - **LS 07 Rehabilitation - Added 6 , 7, 9, 10, 11, 12, 13, 16, 25, 26, 27**
  - **Pump Station 2 Flow Meter Replacement – Added Bid Item 28**
  - **Pump Station 3 Flow Meter Replacement – Added Bid Item 28**

Note- Upon Contractor selection, the City will incorporate all changes into a single Plan Set & Specifications Package and issue Conformed Contract Documents.

2. Updated Bid Form (behind this page)

BID FORM
CITY OF ST. PETE BEACH
PUMP & LIFT STATION REHABILITATIONS - PID# PS26-401-608-00
ADDENDUM #5

ITEM	DESCRIPTION	EST. QTY.	U/M	BID PRICE PER UNIT ($)	TOTAL BID PRICE ($)
I. MISCELLANEOUS					
1	Mobilization	1	LS		
2	Maintenance of Traffic	1	LS		
3	Erosion and Sediment Control	1	LS		
4	Bypass Pumping	1	LS		
5	Project Record Documents (As-Builts + O&M)	1	LS		
				SUBTOTAL	
II. LS #04 REHABILITATION					
6	Cleaning Existing Valve Vault Including Removal of Debris and Sand Blasting and Recoating of Existing Fittings	1	LS		
7	Electrical Equipment Rack Including Pump Control Panel (5 HP - 7.5 HP), Meter, Main Disconnect, Automatic Transfer Switch, Junction Box, and Relocation of SCADA Panel	1	LS		
9	Elevated Platform	1	LS		
10	Backup Generator, Enclosure, and Sub-Base Fuel Tank	1	LS		
11	Site Lighting	1	LS		
12	6 Feet Tall Vinyl Privacy Fence	100	LF		
13	6 Feet Tall, 4 Feet Wide Vinyl Privacy Access Gate	1	LS		
14	Curb Installation	70	LF		
15	Potable Water Service and Hose Bib Relocation	1	LS		
16	Demolition	1	LS		
24	Shell Restoration	20	CY		
				SUBTOTAL	
III. LS #05 REHABILITATION					
6	Cleaning Existing Valve Vault Including Removal of Debris and Sand Blasting and Recoating of Existing Fittings	1	LS		
17	Electrical I&C (5 HP - 7.5 HP Pump Control Panel Replacement)	1	LS		
				SUBTOTAL	
V. LS #09 REHABILITATION					
6	Cleaning Existing Valve Vault Including Removal of Debris and Sand Blasting and Recoating of Existing Fittings	1	LS		
17	Electrical I&C (5 HP - 7.5 HP Pump Control Panel Replacement)	1	LS		
				SUBTOTAL	
VI. LS #10 REHABILITATION					
6	Cleaning Existing Valve Vault Including Removal of Debris and Sand Blasting and Recoating of Existing Fittings	1	LS		
19	Clean Wetwell Including Sand/Debris Pump Out	1	LS		
20	2" S.S. Air Release Valve (Above Ground)	1	LS		
21	Force Main Detectable Warning Tape Replacement	35	LF		
8	Electrical Equipment Rack Including Pump Control Panel (12 HP with VFD), Meter, Main Disconnect, Automatic Transfer Switch, Junction Box, and Relocation of SCADA Panel	1	LS		
9	Elevated Platform	1	LS		
10	Backup Generator, Enclosure, and Sub-Base Fuel Tank	1	LS		
11	Site Lighting	1	LS		
12	6 Feet Tall Vinyl Privacy Fence	125	LF		
22	6 Feet Tall, 12 Feet Wide Vinyl Privacy Double Gate	1	LS		
23	Reclaimed Water Service and Hose Bib Relocation	1	LS		
16	Demolition	1	LS		
				SUBTOTAL	
VII. LS #11 REHABILITATION					
6	Cleaning Existing Valve Vault Including Removal of Debris and Sand Blasting and Recoating of Existing Fittings	1	LS		
19	Clean Wetwell Including Sand/Debris Pump Out	1	LS		
17	Electrical I&C (5 HP - 7.5 HP Pump Control Panel Replacement)	1	LS		
				SUBTOTAL	
VIII. LS #12 REHABILITATION					
6	Cleaning Existing Valve Vault Including Removal of Debris and Sand Blasting and Recoating of Existing Fittings	1	LS		
17	Electrical I&C (5 HP - 7.5 HP Pump Control Panel Replacement)	1	LS		
				SUBTOTAL	
IX. LS #13 REHABILITATION					
6	Cleaning Existing Valve Vault Including Removal of Debris and Sand Blasting and Recoating of Existing Fittings	1	LS		
17	Electrical I&C (5 HP - 7.5 HP Pump Control Panel Replacement)	1	LS		

				SUBTOTAL	
X. LS #14 REHABILITATION					
6	Cleaning Existing Valve Vault Including Removal of Debris and Sand Blasting and Recoating of Existing Fittings	1	LS		
17	Electrical I&C (5 HP - 7.5 HP Pump Control Panel Replacement)	1	LS		
				SUBTOTAL	
XI. LS #15 REHABILITATION					
6	Cleaning Existing Valve Vault Including Removal of Debris and Sand Blasting and Recoating of Existing Fittings	1	LS		
17	Electrical I&C (5 HP - 7.5 HP Pump Control Panel Replacement)	1	LS		
				SUBTOTAL	
XII. SW LS #35 REHABILITATION					
18	Electrical I&C (35 HP Pump Control Panel Replacement with Soft Starter)	1	LS		
				SUBTOTAL	
XIII. LS #07 REHABILITATION					
6	Cleaning Existing Valve Vault Including Removal of Debris and Sand Blasting and Recoating of Existing Fittings	1	LS		
7	Electrical Equipment Rack Including Pump Control Panel (5 HP - 7.5 HP With VFD), Automatic Transfer Switch, Junction Box, and Relocation of SCADA Panel, Pump Controller/Switch	1	LS		
9	Elevated Platform	1	LS		
10	Backup Generator, Enclosure, and Sub-Base Fuel Tank	1	LS		
11	Site Lighting	1	LS		
12	6 Feet Tall Vinyl Privacy Fence	100	LF		
13	6 Feet Tall, 4 Feet Wide Vinyl Privacy Access Gate	1	LS		
16	Demolition	1	LS		
25	Sidewalk Replacement	10	SY		
26	Landscaping	1	LS		
27	Irrigation System	1	LS		
XV. Pump Station 2 Flow Meter Replacement					
28	Flow Meter Replacement (Simens Sitrans F Series) including Conduit, Wire, Transmitter, and Associated Appurtenance	1	LS		
				SUBTOTAL	
XV. Pump Station 3 Flow Meter Replacement					
28	Flow Meter Replacement (Simens Sitrans F Series) including Conduit, Wire, Transmitter, and Associated Appurtenance	1	LS		
				SUBTOTAL	
				I. MISCELLANEOUS	
				II. THROUGH XV. SUBTOTAL	
				CONTINGENCY (10%)	
				BID TOTAL	

3. Lift Station 7 Rehab Plans including Landscaping and Irrigation (behind this page)

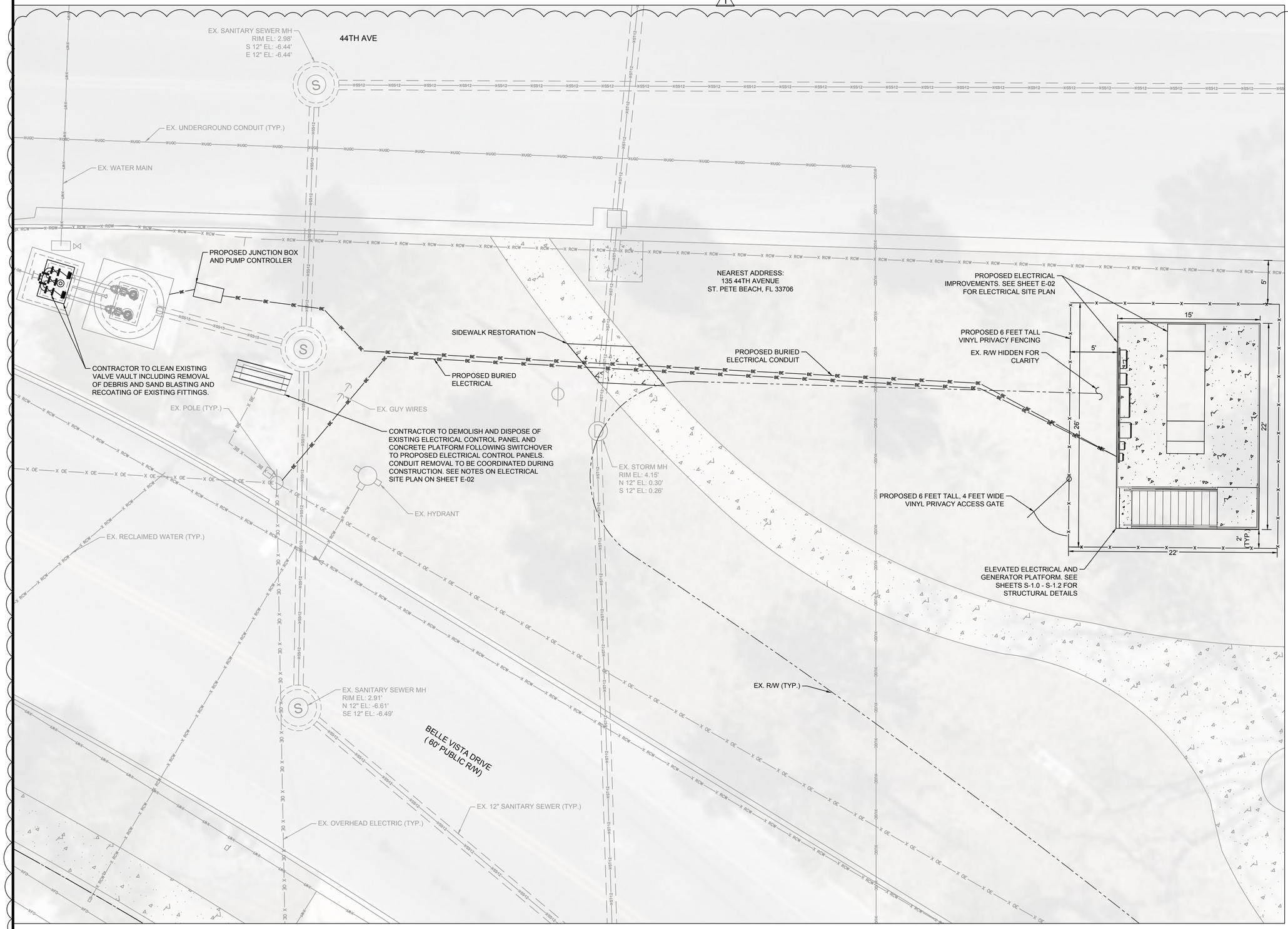

NORTH

GRAPHIC SCALE IN FEET
0 2.5 5 10

GENERAL NOTES:

1. CONTRACTOR SHALL FIELD VERIFY EXISTING CONDITIONS PRIOR TO BEGINNING CONSTRUCTION AND ORDERING EQUIPMENT. CONTRACTOR SHALL NOTIFY ENGINEER OF DISCREPANCIES
2. CONTRACTOR SHALL TAKE ALL PRECAUTIONARY MEASURES NECESSARY TO PROTECT EXISTING EQUIPMENT, UTILITIES, STRUCTURES, AND PERSONNEL FROM DAMAGE OR INJURY DURING CONSTRUCTION.
3. CONSTRUCTION SEQUENCE SHALL BE COORDINATED TO AVOID ANY FLOW INTERRUPTIONS.
4. ALL EXISTING MECHANICAL PIPING AND EQUIPMENT REMOVED SHALL BE SALVAGED PER SPECIFICATIONS.
5. CONTRACTOR IS RESPONSIBLE FOR DISPOSAL OF DEMOLISHED MATERIAL. DISPOSAL SHALL BE IN ACCORDANCE WITH ALL LOCAL, STATE, AND FEDERAL REGULATIONS.
6. PRESSURE WASHING AND CLEANING OF EXISTING WET WELL SHALL BE COMPLETED FOLLOWING EQUIPMENT REMOVAL AND BYPASSING OF THE LIFT STATION.
7. BYPASSING WILL BE REQUIRED FOR CONSTRUCTION. CONTRACTOR TO SUBMIT BY PASSING PLAN PRIOR TO BEGINNING CONSTRUCTION.
8. CONTRACTOR TO CLEAR AND GRUB AS NECESSARY FOR PROPOSED IMPROVEMENTS INCLUDING ELEVATED PLATFORM, SITE FENCING, AND PIPING/CONDUIT INSTALLATION
9. CONTRACTOR TO VERIFY SIZES PRIOR TO ORDERING MATERIALS

LEGEND

R/W	
PROPOSED 6' VINYL FENCING	
PROPOSED CONDUIT	
SIDEWALK RESTORATION	
TO BE DEMOLISHED	

GROUNDWATER / DEWATERING NOTE:
THE PRESENCE OF GROUNDWATER SHOULD BE ANTICIPATED ON THIS PROJECT. CONTRACTOR'S BID SHALL INCLUDE CONSIDERATION FOR THIS ISSUE. WHEN PERFORMING GRADING OPERATIONS DURING PERIODS OF WET WEATHER, PROVIDE ADEQUATE DEWATERING, DRAINAGE AND GROUND WATER MANAGEMENT TO CONTROL MOISTURE OF SOILS.

811 KNOW WHAT'S BELOW ALWAYS CALL 811 BEFORE YOU DIG
It's fast. It's free. It's the law.
www.callsunshine.com

No.	Revisions	Date	By
1	BID ADDENDUM #5	4/16/2026	KTM

Kimley»Horn
© 2026 KIMLEY-HORN AND ASSOCIATES, INC.
200 CENTRAL AVENUE, SUITE 600
ST. PETERSBURG, FL 33701
P: 727 547 3999
WWW.KIMLEY-HORN.COM REGISTRY NO. 35106

DESIGN ENGINEER: KYLE T. MATHENY, P.E. | FL LICENSE NUMBER 97287 | DATE:

SCALE: AS NOTED
DESIGN: KTM
DRAWN: JTS
CHECKED: SNH

SITE PLAN

CITY OF ST. PETE BEACH
LIFT STATION 07
REHABILITATION
PID# PS26-401-608-00
PINELLAS COUNTY FLORIDA

DATE: APRIL 2026

PROJECT NO. 148404108

SHEET NUMBER LS 7-01

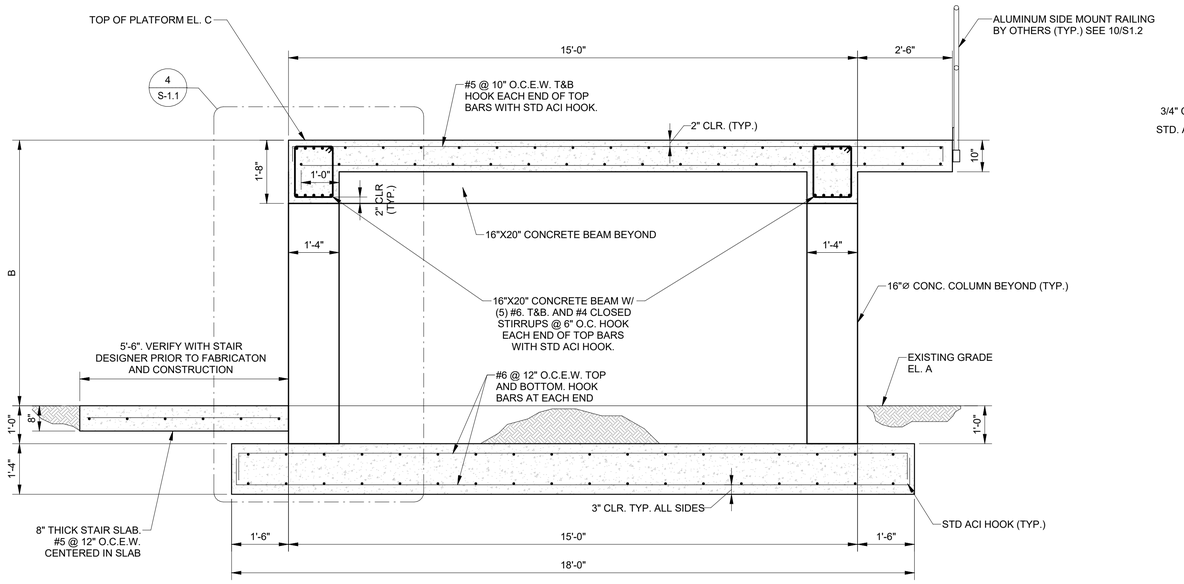

3 S-1.1 ELEVATED GENERATOR PLATFORM - TYPICAL SECTION

SCALE: 1/2" = 1'-0"

NOTES: 1. REFER TO LIFT STATION ELEVATION TABLE ON THIS SHEET FOR ELEVATIONS AND PLATFORM HEIGHT.
2. STAIRS NOT SHOWN FOR CLARITY

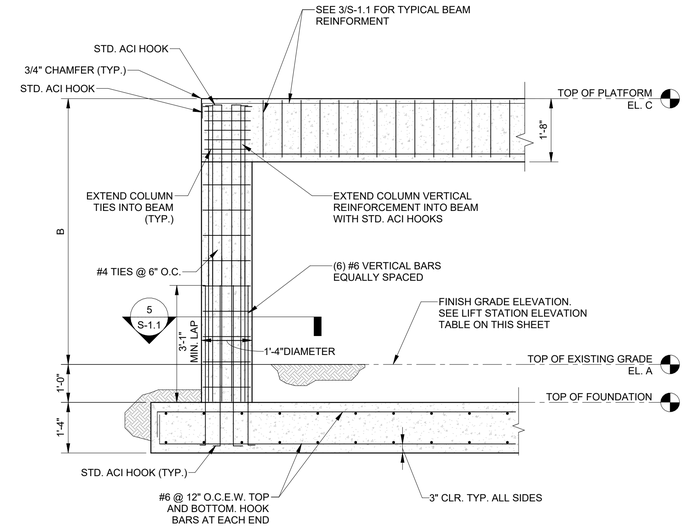

4 S-1.1 TYPICAL COLUMN REINFORCEMENT

SCALE: 1/2" = 1'-0"

NOTES: 1. REFER TO LIFT STATION ELEVATION TABLE ON THIS SHEET FOR ELEVATIONS AND PLATFORM HEIGHT.
2. RAILING NOT SHOWN FOR CLARITY

LIFT STATION	BASE FLOOD ELEVATION (ft)*	"A" APPROX. EX. GRADE ELEVATION (ft)	"B" APRROX. PLATFORM HEIGHT (ft)	"C" PLATFORM ELEVATION (ft)
10	11	4.85	6.15	11
7	9	3.90	5.10	9
4	9	2.95	6.05	9

*FEMA Flood Zone AE Map Numbers (Effective 8/24/2021):
LS 10 - 12103C0257H
LS 7 - 12103C0278H
LS 4 - 12103C0278H

LIFT STATION ELEVATION TABLE

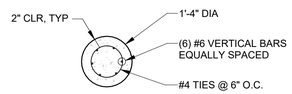

5 S-1.1 COLUMN SECTION

SCALE: 1/2" = 1'-0"

No.	Revisions	Date	By
1	BID ADDENDUM #5	4/16/2026	SES

Kimley»Horn
© 2026 KIMLEY-HORN AND ASSOCIATES, INC.
200 CENTRAL AVENUE, SUITE 600
ST. PETERSBURG, FL 33701
P. 727 547 3999
WWW.KIMLEY-HORN.COM REGISTRY NO. 35106

DESIGN ENGINEER: SETH E. SCHMID, P.E.
FL LICENSE NUMBER 54640
DATE:

SCALE: AS NOTED
DESIGN: SES
DRAWN: BTA
CHECKED:

ELEVATED GENERATOR
PLATFORM DETAILS

CITY OF ST. PETE BEACH
PUMP & LIFT STATION
REHABILITATIONS
PID# PS26-401-608-00
PINELLAS COUNTY FLORIDA

DATE:
APRIL 2026
PROJECT NO.
148404108
SHEET NUMBER
S-1.1

\\kimley-horn.com\WF_STP\STP_Civil\148404 - City of St. Pete Beach\08 - Lift Station Rehabilitation (LS 4, 5, 7, 9, 10, 11, 12, 13, 14, 15, 16 and SW LS 35)\CADD\Revit\LS 4, 7, 10\Structural\148404108 - LS Rehab Structural.rvt

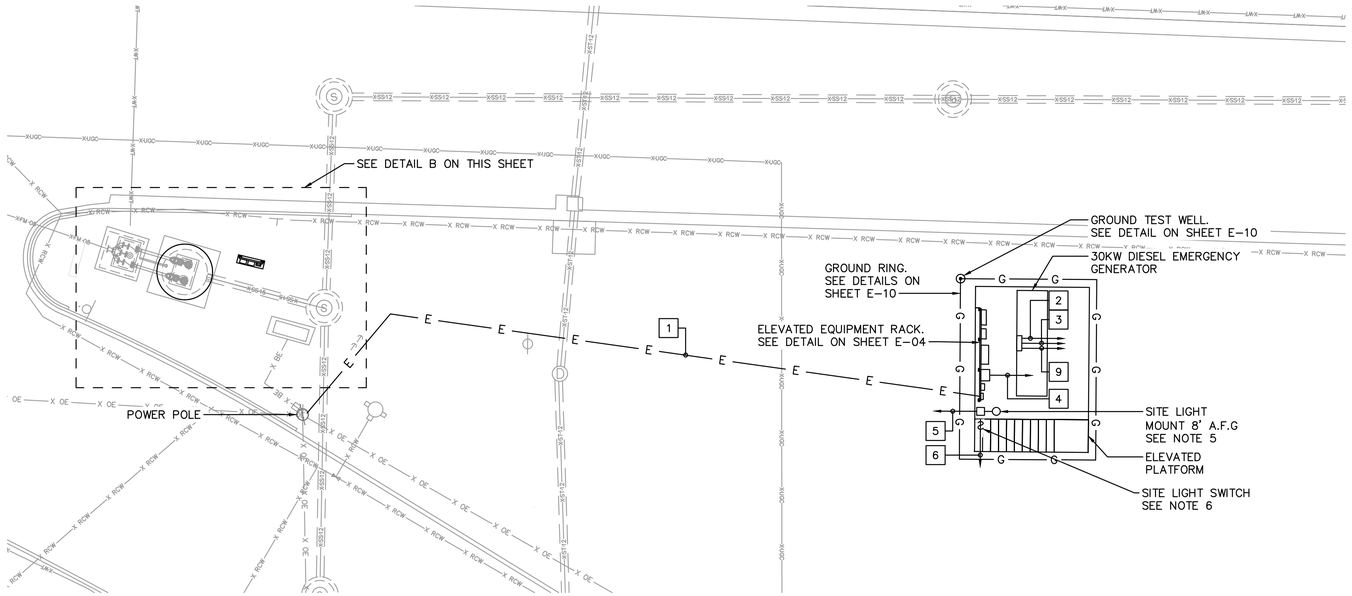

A ELECTRICAL SITE PLAN

SCALE: 1" = 10'

GRAPHIC SCALE IN FEET
0 5 10 20

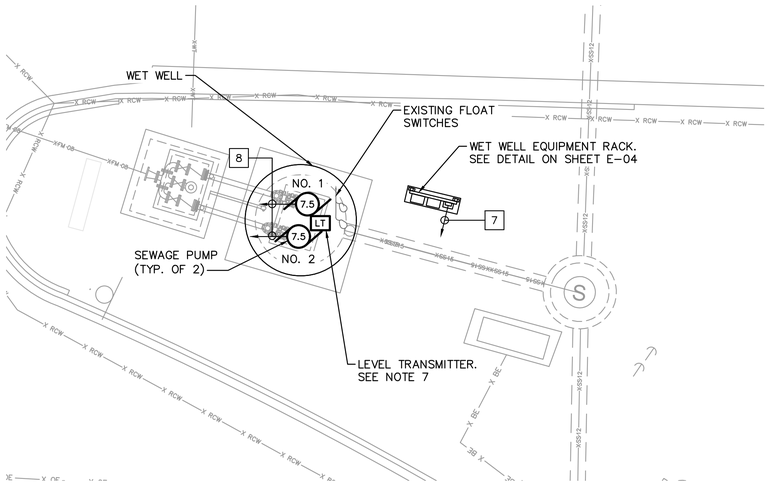

B WET WELL ELECTRICAL PLAN

SCALE: 1" = 5'

GRAPHIC SCALE IN FEET
0 2.5 5 10

GENERAL NOTES:

1. COORDINATE ELECTRIC SERVICE WITH DUKE ENERGY.
2. REUSE EXISTING CONDUIT TO THE FULLEST EXTENT POSSIBLE.
3. CONDUITS SHOWN ARE REPRESENTATIVE ONLY. CONTRACTOR SHALL DETERMINE CONDUIT LOCATION AND ROUTING.
4. SEE ONE-LINE DIAGRAM ON SHEET E-03 FOR ADDITIONAL CONDUIT AND WIRING.
5. POLE-MOUNTED FIXTURE, LITHONIA #DSXF1 LED P2 40K WFL MVOLT IS DDBXD. CONTRACTOR TO FIELD ADJUST ORIENTATION AS REQUIRED.
6. WEATHERPROOF 20A-1P SITE LIGHT SWITCH. MOUNT TO THE ELEVATED PLATFORM COLUMN, 48" ABOVE THE STEP.
7. REPLACE EXISTING SUBMERSIBLE LEVEL TRANSMITTER WITH A RADAR LEVEL TRANSMITTER. SEE INSTALLATION DETAIL ON SHEET E-10.
8. THE WET IS CLASSIFIED AS A CLASS 1, DIVISION 1, GROUP D ARE IN ACCORDANCE WITH NFPA 820. THE INSTALLATION OF ALL ELECTRICAL EQUIPMENT SHALL BE PERFORMED IN ACCORDANCE WITH THIS CLASSIFICATION.

KEY NOTES:

1. 4#1 IN 2" CONDUIT TO POWER POLE
2. 2#12 AND #12 GND. IN 1" CONDUIT TO PUMP CONTROL PANEL ON ELECTRICAL EQUIPMENT RACK
3. 8#14 IN AND (1) ETHERNET CABLE 1" CONDUIT TO SCADA PANEL ON ELECTRICAL EQUIPMENT RACK
4. 4#14 AND (1) ETHERNET CABLE IN 1" CONDUIT TO SCADA PANEL ON ELECTRICAL EQUIPMENT RACK
5. 2#12 AND #12 GND. IN 1" CONDUIT TO PUMP CONTROL PANEL ON ELECTRICAL EQUIPMENT RACK
6. 2#12 AND #12 GND. IN 1" CONDUIT TO SITE LIGHT
7. 4#14 IN 1" CONDUIT FOR EACH L/O/R SELECTOR BUTTON TO CONTROL PANEL ON ELECTRICAL RACK.
8. 4#14 IN 1" CONDUIT TO PUMP CONTROL PANEL.
9. 2#14 IN 1" CONDUIT TO ATS ON ELECTRICAL EQUIPMENT RACK.

No.	Revisions	Date	By
1	BID ADDENDUM #5	4/16/2026	JAH

Kimley»Horn
© 2026 KIMLEY-HORN AND ASSOCIATES, INC.
200 CENTRAL AVENUE, SUITE 600
ST. PETERSBURG, FL 33701
P: 727 547 3999
WWW.KIMLEY-HORN.COM REGISTRY NO. 35106

DESIGN ENGINEER: JASON A. HOYT, P.E.
FL LICENSE NUMBER 101453
DATE:

SCALE: AS NOTED
DESIGN: EBW
DRAWN: RG
CHECKED: JAH

LIFT STATION 7 REHABILITATION
ELECTRICAL SITE PLAN

CITY OF ST. PETE BEACH
LIFT STATION 07
REHABILITATION
PID# PS26-401-608-00
PINELLAS COUNTY FLORIDA

DATE:
APRIL 2026

PROJECT NO.
148404108

SHEET NUMBER
LS 7 - E-02

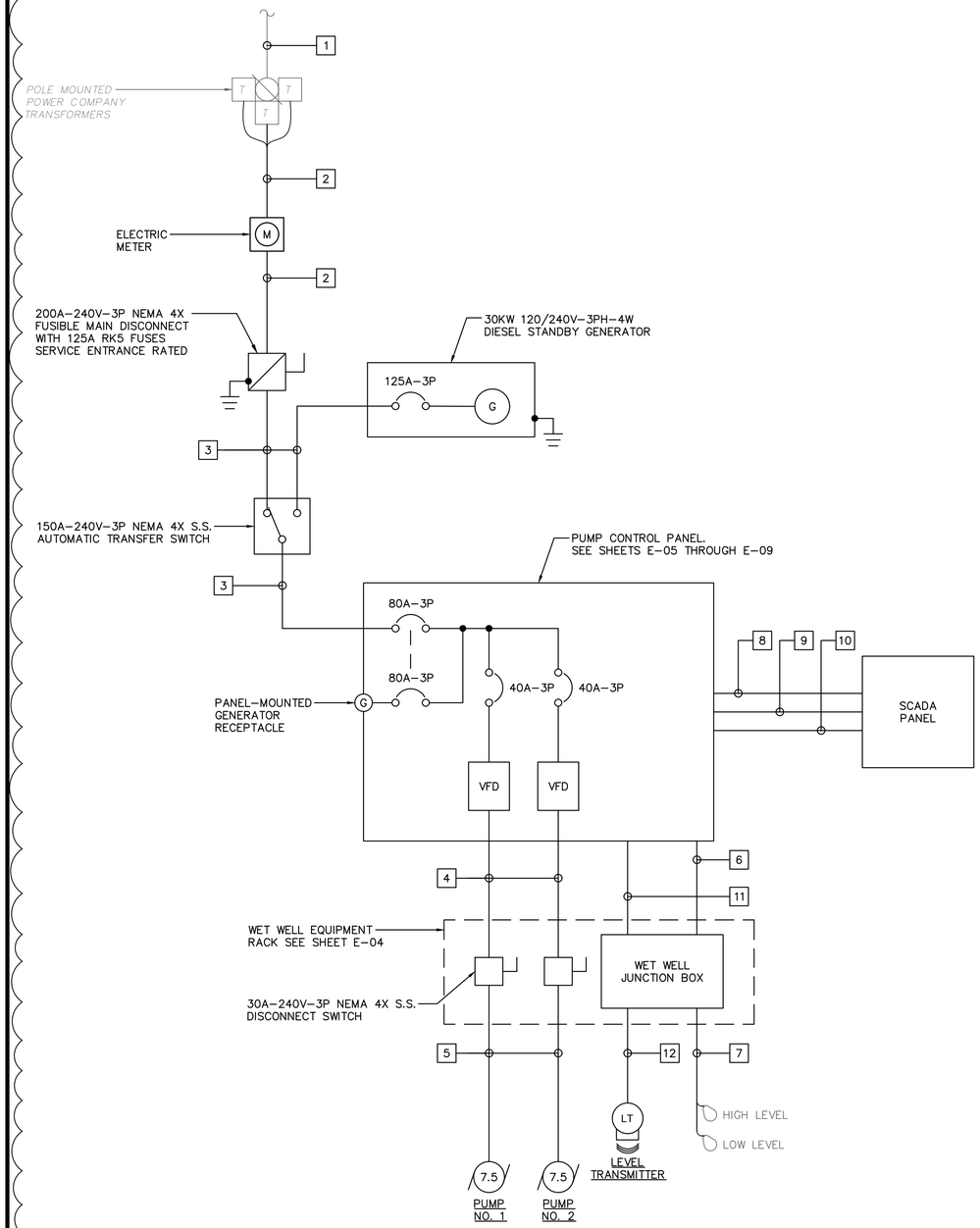

A ELECTRICAL ONE-LINE DIAGRAM

SCALE: NO SCALE

GENERAL NOTES:

1. REUSE EXISTING CONDUIT TO THE FULLEST EXTENT POSSIBLE.
2. CONDUITS SHOWN ARE REPRESENTATIVE ONLY. CONTRACTOR SHALL DETERMINE CONDUIT LOCATION AND ROUTING.
3. COORDINATE FLOAT LEVEL SWITCH ELEVATIONS WITH THE CITY.
4. EXISTING FLOATS NOT USED SHALL BE SECURED ABOVE THE HIGH LEVEL FLOAT FOR USE AS SPARES.

KEY NOTES:

1. PRIMARY OVERHEAD ELECTRIC SERVICE
2. 4#1 IN 2" CONDUIT
3. 4#1 AND #6 GND. IN 2" CONDUIT
4. 3#10, #10 GND. IN 1–1/2" CONDUIT
5. SUBMERSIBLE PUMP CABLES IN 2" CONDUIT
6. 8#14 IN 2" CONDUIT
7. FLOAT SWITCH CABLES IN 2" CONDUIT
8. SPARE 2" CONDUIT
9. 32#14, #14 GND., AND (6) 1 PR. #16 SHLD. IN 2 1/2"C
10. (2) ETHERNET CABLES IN 1" CONDUIT
11. (1) 1PR. #16 SHLD. IN 3/4" CONDUIT
12. LEVEL TRANSMITTER MANUFACTURER CABLE IN 1" CONDUIT

ELECTRICAL LOAD CALCULATION

LOAD DESCRIPTION	HP	CONN. LOAD (KVA)	DEMAND FACTOR (DF)	DEMAND LOAD (KVA)
SEWAGE PUMP NO. 1 (LARGEST MOTOR)	7.5	9.15	1.25	11.43
SEWAGE PUMP NO. 2	7.5	9.15	1.00	9.15
AUXILIARY EQUIPMENT		3.00	1.00	3.00
TOTAL:		21.29		23.58

ELECTRICAL LOAD SUMMARY

SERVICE VOLTAGE:	240	V
PHASE:	3	
CONNECTED LOAD:	21.29	KVA
	51.22	A
DEMAND LOAD:	23.58	KVA
	56.72	A
LOAD MULTIPLIER:	1.25	
MINIMUM SERVICE:	29.47	KVA
	70.90	A
SEVICE ENTRANCE TRIP RATING:	125	A
MINIMUM SHORT CIRCUIT CURRENT RATING:	22	KAIC

B ELECTRICAL LOAD CALCULATIONS

SCALE: NO SCALE

No.	Revisions	Date	By
1	BID ADDENDUM #5	4/16/2026	JAH

Kimley»Horn
© 2026 KIMLEY-HORN AND ASSOCIATES, INC.
200 CENTRAL AVENUE, SUITE 600
ST. PETERSBURG, FL 33701
P: 727 547 3999
WWW.KIMLEY-HORN.COM REGISTRY NO. 35106

DESIGN ENGINEER: JASON A. HOYT, P.E.
FL LICENSE NUMBER 101453
DATE:

SCALE: AS NOTED
DESIGN: EBW
DRAWN: RG
CHECKED: JAH

LIFT STATION 7 REHABILITATION
ELECTRICAL ONE-LINE DIAGRAM

CITY OF ST. PETE BEACH
LIFT STATION 07
REHABILITATION
PID# PS26-401-608-00
PINELLAS COUNTY FLORIDA

DATE:
APRIL 2026

PROJECT NO.
148404108

SHEET NUMBER
LS 7 - E-03

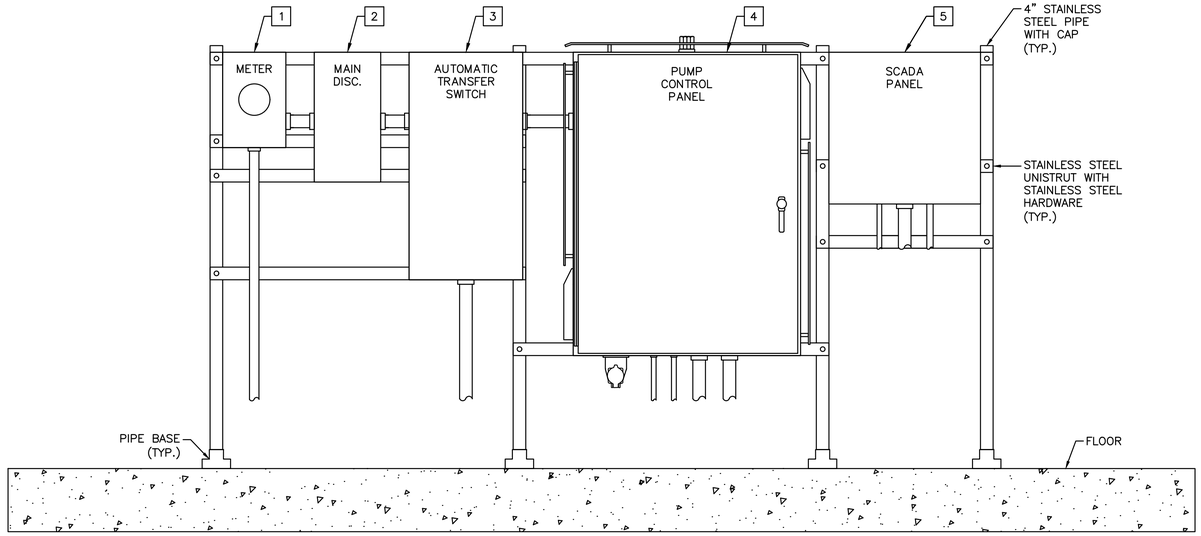

A ELEVATED ELECTRICAL EQUIPMENT RACK ELEVATION - VFD

SCALE: NO SCALE

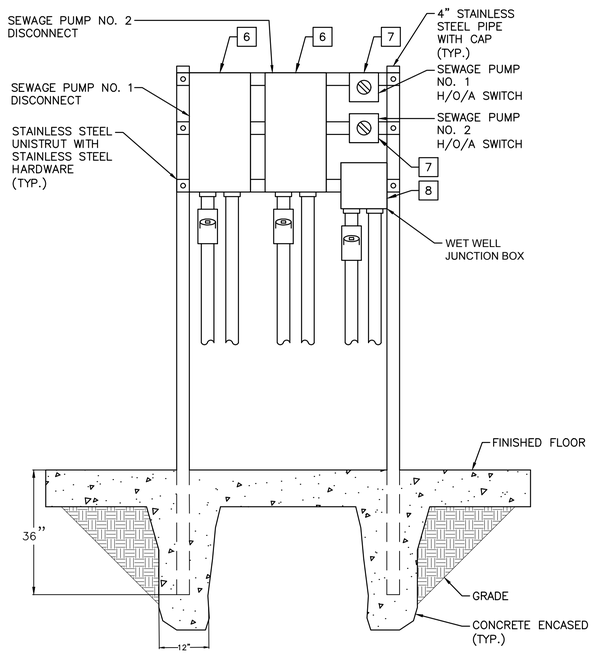

B WET WELL EQUIPMENT RACK

SCALE: NO SCALE

GENERAL NOTES:

1. INSTALL CONDUITS AND CONDUCTORS FOR SERVICE AND EQUIPMENT GROUND AS REQUIRED BY APPLICABLE CODES AND SPECIFICATIONS.
2. REUSE EXISTING CONDUIT TO THE FULLEST EXTENT POSSIBLE.
3. CONDUITS SHOWN ARE REPRESENTATIVE ONLY. CONTRACTOR SHALL DETERMINE CONDUIT LOCATION AND ROUTING.
4. SEE ONE-LINE DIAGRAM ON SHEET E-03 FOR ADDITIONAL CONDUIT AND WIRING.

KEY NOTES:

1. ELECTRIC METER IN ALUMINUM ENCLOSURE. COORDINATE ELECTRIC METER INSTALLATION WITH ALL UTILITY REQUIREMENTS.
2. HEAVY DUTY, PAD-LOCKABLE, 200A-240V-3P NEMA 4X STAINLESS STEEL FUSIBLE DISCONNECT, SERVICE ENTRANCE RATED. FUSES SHALL BE 240V, 125A, DUAL-ELEMENT, TIME-DELAY RK5 FUSES.
3. ASCO 300 SERIES 150A-240V-3P NEMA 4X STAINLESS STEEL AUTOMATIC TRANSFER SWITCH.
4. SEE SHEETS E-05 THROUGH E-09 FOR PUMP CONTROL PANEL LAYOUT AND WIRING DIAGRAMS.
5. CITY PROVIDED AND INSTALLED SCADA PANEL AND ANTENNA. COORDINATE REPLACEMENT WITH THE CITY.
6. HEAVY DUTY, PAD-LOCKABLE, 30A-240V-3P NEMA 4X STAINLESS STEEL DISCONNECT.
7. HEAVY DUTY, 3 POSITION SELECTOR SWITCH NEMA 4X STAINLESS STEEL.
8. PROVIDE TERMINALS AS REQUIRED IN JUNCTION BOX FOR LEVEL TRANSMITTER AND FLOAT SWITCH CABLES.

No.	Revisions	Date	By
1	BID ADDENDUM #5	4/16/2026	JAH

Kimley»Horn

© 2026 KIMLEY-HORN AND ASSOCIATES, INC.
200 CENTRAL AVENUE, SUITE 600
ST. PETERSBURG, FL 33701
P: 727 547 3999
WWW.KIMLEY-HORN.COM REGISTRY NO. 35106

DESIGN ENGINEER:
JASON A. HOYT, P.E.
FL LICENSE NUMBER
101453
DATE:

SCALE: AS NOTED
DESIGN: EBW
DRAWN: RG
CHECKED: JAH

ELEVATED ELECTRICAL EQUIPMENT RACK

CITY OF ST. PETE BEACH
LIFT STATION 07
REHABILITATION
PID# PS26-401-608-00
PINELLAS COUNTY FLORIDA

DATE:
APRIL 2026

PROJECT NO.
148404108

SHEET NUMBER
LS 7 - E-04

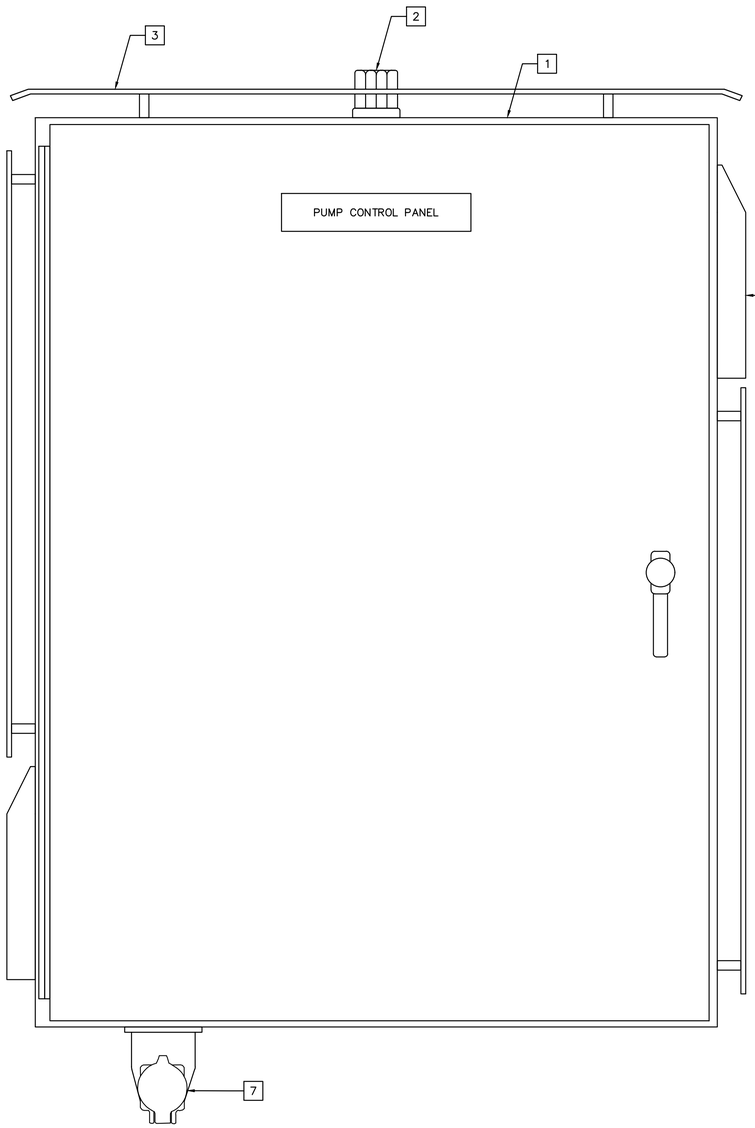

A PUMP CONTROL PANEL
PANEL LAYOUT
SCALE: NO SCALE

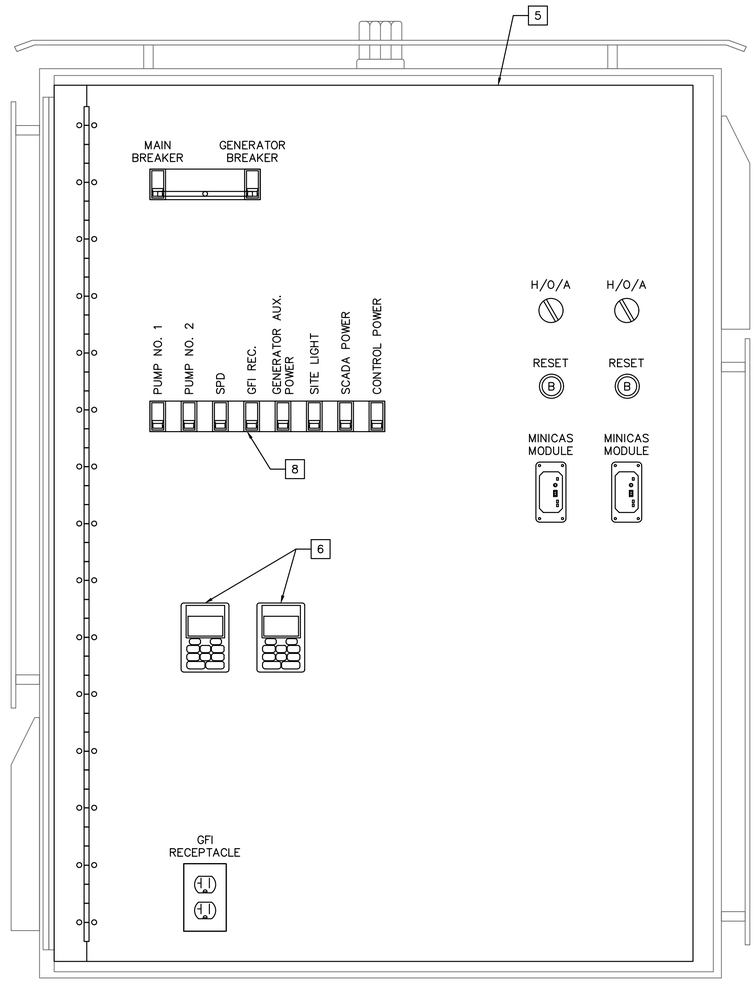

B PUMP CONTROL PANEL
SWING–OUT LAYOUT
SCALE: NO SCALE

KEY NOTES:

1. PROVIDE 48" X 36" X 12", 316 STAINLESS STEEL ENCLOSURE WITH PAD–LOCKABLE 3–POINT LATCH.
2. PROVIDE NEMA 4X RED ALARM LIGHT.
3. PROVIDE STAINLESS STEEL SUN–SHIELDS ON THE TOP AND SIDES OF THE ENCLOSURE. ATTACH SUN–SHIELDS WITH STAINLESS STEEL HARDWARE.
4. PROVIDE ENCLOSURE COOLING FANS WITH STAINLESS STEEL SHROUDS. SIZE ENCLOSURE COOLING FANS TO ADEQUATELY DISSIPATE HEAT.
5. PROVIDE SWING–OUT PANEL AND DOOR STOP KIT.
6. PROVIDE VARIABLE FREQUENCY DRIVE REMOTE KEYPAD.
7. PROVIDE EMERGENCY GENERATOR RECEPTACLE. COORDINATE REQUIREMENTS WITH THE CITY.
8. ALL CIRCUIT BREAKERS SHALL BE ACCESSIBLE THROUGH THE SWING–OUT.

No.	Revisions	Date	By
1	BID ADDENDUM #5	4/16/2026	JAH

Kimley»Horn
© 2026 KIMLEY-HORN AND ASSOCIATES, INC.
200 CENTRAL AVENUE, SUITE 600
ST. PETERSBURG, FL 33701
P: 727 547 3999
WWW.KIMLEY-HORN.COM REGISTRY NO. 35106

DESIGN ENGINEER: JASON A. HOYT, P.E.
FL LICENSE NUMBER 101453
DATE:

SCALE: AS NOTED
DESIGN: EBW
DRAWN: RG
CHECKED: JAH

PUMP CONTROL PANEL LAYOUT

CITY OF ST. PETE BEACH
LIFT STATION 07
REHABILITATION
PID# PS26-401-608-00
PINELLAS COUNTY FLORIDA

DATE: APRIL 2026

PROJECT NO. 148404108

SHEET NUMBER LS 7 - E-05

No.	Revisions	Date	By
1	BID ADDENDUM #5	4/16/2026	JAH

Kimley»Horn

© 2026 KIMLEY-HORN AND ASSOCIATES, INC.
200 CENTRAL AVENUE, SUITE 600
ST. PETERSBURG, FL 33701
P: 727 547 3999
WWW.KIMLEY-HORN.COM REGISTRY NO. 35106

DESIGN ENGINEER:
JASON A. HOYT, P.E.
FL LICENSE NUMBER
101453
DATE:

SCALE: AS NOTED
DESIGN: EBW
DRAWN: RG
CHECKED: JAH

PUMP CONTROL PANEL WIRING DIAGRAM

CITY OF ST. PETE BEACH
LIFT STATION 07
REHABILITATION
PID# PS26-401-608-00
PINELLAS COUNTY FLORIDA

DATE:
APRIL 2026

PROJECT NO.
148404108

SHEET NUMBER
LS 7 - E-06

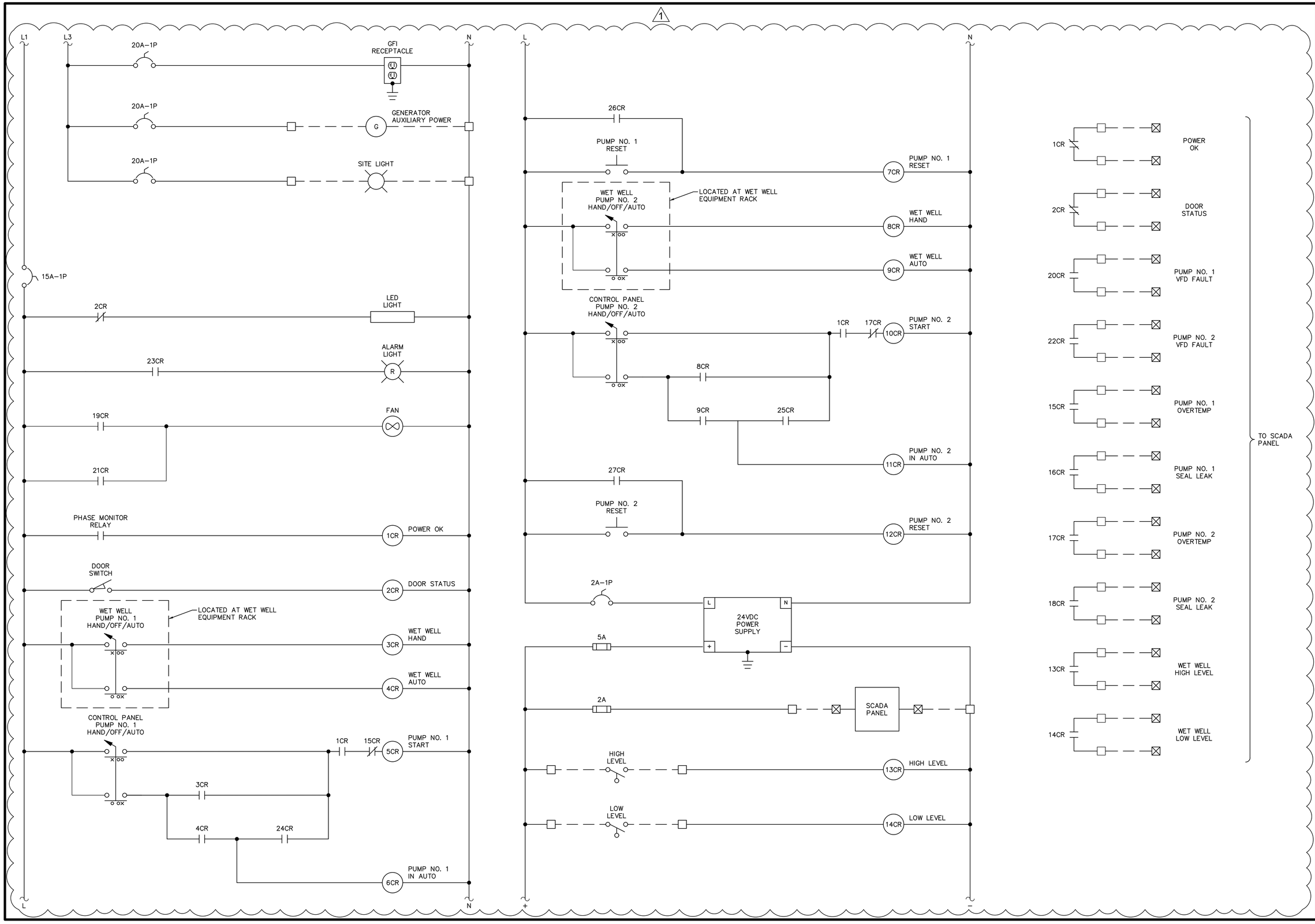

No.	Revisions	Date	By
1	BID ADDENDUM #5	4/16/2026	JAH

Kimley»Horn
© 2026 KIMLEY-HORN AND ASSOCIATES, INC.
200 CENTRAL AVENUE, SUITE 600
ST. PETERSBURG, FL 33701
P: 727 547 3999
WWW.KIMLEY-HORN.COM REGISTRY NO. 35106

DESIGN ENGINEER:
JASON A. HOYT, P.E.
FL LICENSE NUMBER
101453
DATE:

SCALE: AS NOTED
DESIGN: EBW
DRAWN: RG
CHECKED: JAH

PUMP CONTROL PANEL WIRING DIAGRAM

CITY OF ST. PETE BEACH
LIFT STATION 07
REHABILITATION
PID# PS26-401-608-00
PINELLAS COUNTY FLORIDA

DATE:
APRIL 2026

PROJECT NO.
148404108

SHEET NUMBER
LS 7 - E-07

No.	Revisions	Date	By
1	BID ADDENDUM #5	4/16/2026	JAH

Kimley»Horn

© 2026 KIMLEY-HORN AND ASSOCIATES, INC.
200 CENTRAL AVENUE, SUITE 600
ST. PETERSBURG, FL 33701
P: 727 547 3999
WWW.KIMLEY-HORN.COM REGISTRY NO. 35106

DESIGN ENGINEER:
JASON A. HOYT, P.E.
FL LICENSE NUMBER
101453
DATE:

SCALE: AS NOTED
DESIGN: EBW
DRAWN: RG
CHECKED: JAH

PUMP CONTROL PANEL WIRING
DIAGRAM

CITY OF ST. PETE BEACH
LIFT STATION 07
REHABILITATION
PID# PS26-401-608-00
PINELLAS COUNTY
FLORIDA

DATE:
APRIL 2026

PROJECT NO.
148404108

SHEET NUMBER
LS 7 - E-08

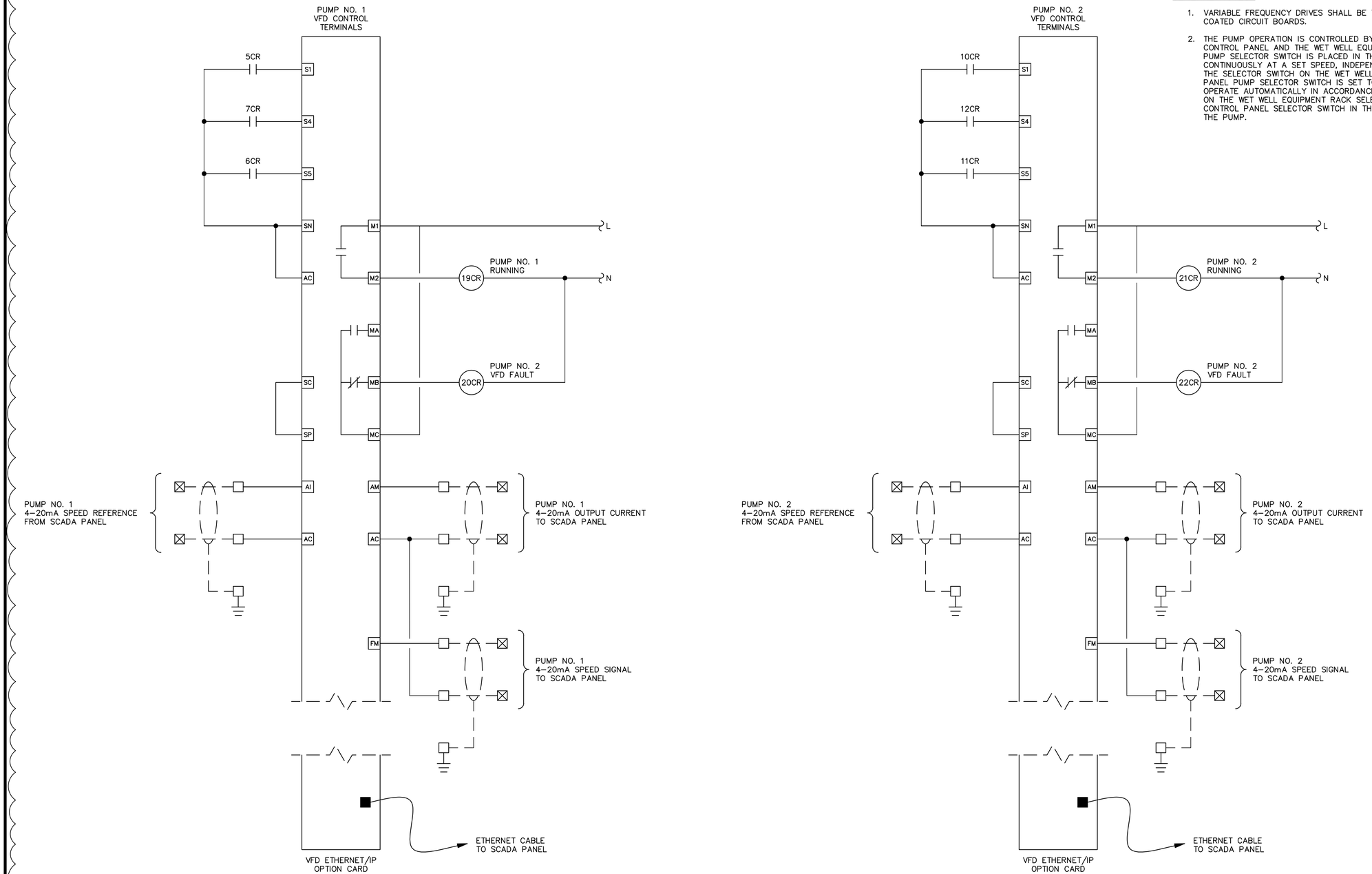

GENERAL NOTES:

1. VARIABLE FREQUENCY DRIVES SHALL BE YASKAWA IQPUMP1000 WITH CONFORMAL COATED CIRCUIT BOARDS.
2. THE PUMP OPERATION IS CONTROLLED BY SELECTOR SWITCHES LOCATED ON THE CONTROL PANEL AND THE WET WELL EQUIPMENT RACK. WHEN THE CONTROL PANEL PUMP SELECTOR SWITCH IS PLACED IN THE HAND POSITION, THE PUMP SHALL RUN CONTINUOUSLY AT A SET SPEED, INDEPENDENT OF THE POSITION OR SETTING OF THE SELECTOR SWITCH ON THE WET WELL EQUIPMENT RACK. WHEN THE CONTROL PANEL PUMP SELECTOR SWITCH IS SET TO THE AUTO POSITION, THE PUMP SHALL OPERATE AUTOMATICALLY IN ACCORDANCE WITH THE OPERATING MODE SELECTED ON THE WET WELL EQUIPMENT RACK SELECTOR SWITCH. PLACEMENT OF THE CONTROL PANEL SELECTOR SWITCH IN THE OFF POSITION SHALL IMMEDIATELY STOP THE PUMP.

No.	Revisions	Date	By
1	BID ADDENDUM #5	4/16/2026	JAH

Kimley»Horn
© 2026 KIMLEY-HORN AND ASSOCIATES, INC.
200 CENTRAL AVENUE, SUITE 600
ST. PETERSBURG, FL 33701
P: 727 547 3999
WWW.KIMLEY-HORN.COM REGISTRY NO. 35106

DESIGN ENGINEER:
JASON A. HOYT, P.E.
FL LICENSE NUMBER
101453
DATE:

SCALE: AS NOTED
DESIGN: EBW
DRAWN: RG
CHECKED: JAH

PUMP CONTROL PANEL WIRING DIAGRAM

CITY OF ST. PETE BEACH
LIFT STATION 07
REHABILITATION
PID# PS26-401-608-00
PINELLAS COUNTY FLORIDA

DATE:
APRIL 2026

PROJECT NO.
148404108

SHEET NUMBER
LS 7 - E-09

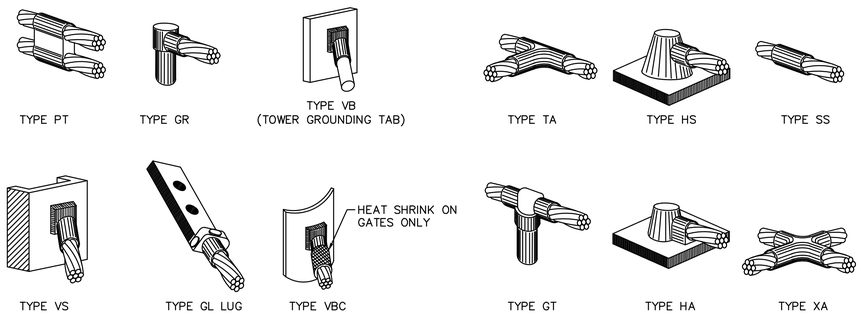

NOTES:

1. CADWELD "TYPES" SHOWN ABOVE ARE EXAMPLES. PROVIDE APPROPRIATE TYPES AS REQUIRED.

A TYPICAL CAD WELD DETAILS
SCALE: NO SCALE

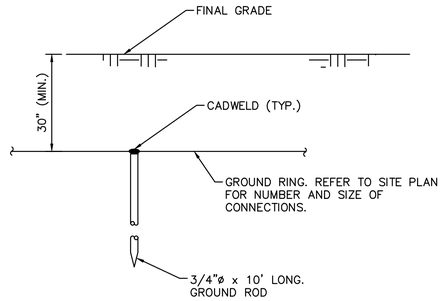

B GROUND ROD DETAIL
SCALE: NO SCALE

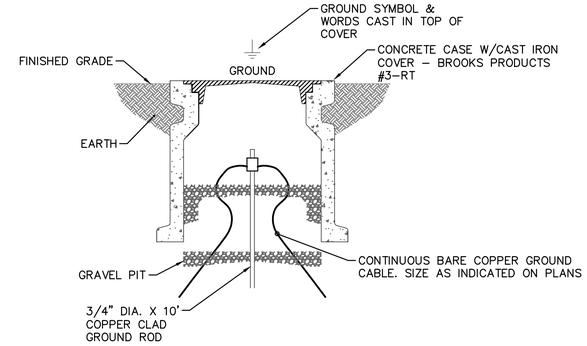

C GROUND TEST WELL DETAIL
SCALE: NO SCALE

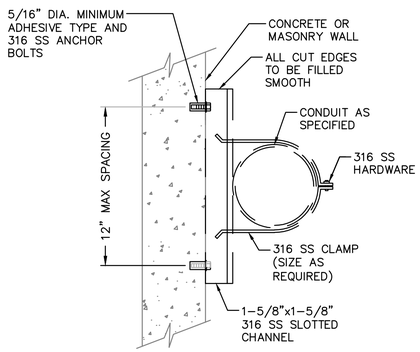

NOTES:

1. CONTRACTOR WILL BE RESPONSIBLE FOR PROVIDING THE CORRECT SIZE ANCHOR BOLTS BASED ON LOAD.
2. FOR SINGLE CONDUITS 2" AND LARGER, USE SLOTTED CHANNEL AND ADHESIVE ANCHORS AS SHOWN.
3. FOR SINGLE CONDUITS 1–1/2" AND SMALLER, SLOTTED CHANNEL MAY BE OMITTED AND USE OF NON–ADHESIVE ANCHORS ARE PERMITTED.

D WALL CONDUIT INSTALLATION DETAIL
SCALE: NO SCALE

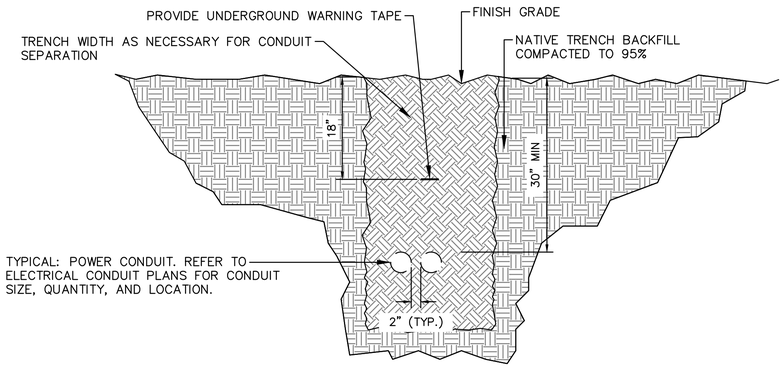

E TRENCH DETAIL
SCALE: NO SCALE

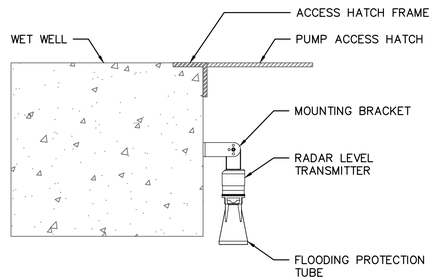

F RADAR LEVEL TRANSMITTER INSTALLATION DETAIL
SCALE: NO SCALE

No.	Revisions	Date	By
1	BID ADDENDUM #5	4/16/2026	JAH

Kimley»Horn
© 2026 KIMLEY-HORN AND ASSOCIATES, INC.
200 CENTRAL AVENUE, SUITE 600
ST. PETERSBURG, FL 33701
P: 727 547 3999
WWW.KIMLEY-HORN.COM REGISTRY NO. 35106

DESIGN ENGINEER: JASON A. HOYT, P.E.
FL LICENSE NUMBER 101453
DATE:

SCALE: AS NOTED | DESIGN: EBW | DRAWN: RG | CHECKED: JAH

ELECTRICAL DETAILS

CITY OF ST. PETE BEACH
LIFT STATION 07
REHABILITATION
PID# PS26-401-608-00
PINELLAS COUNTY FLORIDA

DATE: APRIL 2026

PROJECT NO. 148404108

SHEET NUMBER LS 7 - E-10



PLANT SCHEDULE

SYMBOL	CODE	QTY	BOTANICAL / COMMON NAME	CAL (MIN)	CONT (MIN)	HEIGHT (MIN)	SPREAD	SPACING	NATIVE
TREES									
	SS	4	SABAL PALMETTO / CABBAGE PALMETTO	SLICKED, 8FT	F.G.	12-16 FT CT	3 - 4 FT	AS SHOWN	YES
SYMBOL	CODE	QTY	BOTANICAL / COMMON NAME	SIZE	CONT	HEIGHT	SPREAD	SPACING	NATIVE
SHRUBS									
	CS2	30	CONOCARPUS ERECTUS / GREEN BUTTONWOOD	7 GAL	POT	48 IN MIN	24 IN MIN	42 IN OC	YES
SHRUB AREAS									
	SY	10	SPARTINA CYNOSUROIDES / BIG CORDGRASS	1 GAL	POT	18 IN MIN		24 IN OC	YES
GROUND COVERS									
	CI	38	CHRYSOBALANUS ICACO / COCO PLUM	1 GAL	POT	12 IN MIN		24 IN OC	YES

NOTES:

1. ALL PLANT SPECIFICATIONS IN THE PLANT SCHEDULE SHALL BE CONSIDERED THE MINIMUM ALLOWABLE SPECIFICATIONS. CONTRACTOR SHALL PROCURE PLANT MATERIALS AND UPSIZE AS NECESSARY TO MEET THE MOST STRINGENT SPECIFICATION.
2. LANDSCAPE ARCHITECT RESERVES THE RIGHT TO FIELD ADJUST ALL PLANT MATERIAL.
3. ALL QUANTITIES PROVIDED FOR CONVENIENCE ONLY. CONTRACTOR SHALL CONFIRM ALL QUANTITIES PER PLAN PRIOR TO BIDDING AND CONSTRUCTION.
4. CONTRACTOR SHALL SOD TO LIMITS OF DISTURBANCE, INCLUDING ANY DISTURBANCE WITHIN RIGHT-OF-WAY. ALL SOD TO BE NON-IRRIGATED BAHIA. CONFIRM FINAL SPECIES SELECTION WITH OWNER PRIOR TO INSTALLATION.
5. REFER TO SHEETS L-02 AND L-03 FOR LANDSCAPE NOTES AND DETAILS.

GROUNDWATER / DEWATERING NOTE:
THE PRESENCE OF GROUNDWATER SHOULD BE ANTICIPATED ON THIS PROJECT. CONTRACTOR'S BID SHALL INCLUDE CONSIDERATION FOR THIS ISSUE. WHEN PERFORMING GRADING OPERATIONS DURING PERIODS OF WET WEATHER, PROVIDE ADEQUATE DEWATERING, DRAINAGE AND GROUND WATER MANAGEMENT TO CONTROL MOISTURE OF SOILS.

811 KNOW WHAT'S BELOW ALWAYS CALL 811 BEFORE YOU DIG
It's fast. It's free. It's the law.
www.callsunshine.com

No.	Revisions	Date	By
1	BID ADDENDUM #5	4/16/2026	JLD

Kimley»Horn
© 2026 KIMLEY-HORN AND ASSOCIATES, INC.
200 CENTRAL AVENUE, SUITE 600
ST. PETERSBURG, FL 33701
P. 727 547 3999
WWW.KIMLEY-HORN.COM REGISTRY NO. 35106

DESIGN ENGINEER:
JENNIFER L. DAOULAS
FL LICENSE NUMBER
66673369
DATE:

SCALE: AS NOTED
DESIGN: KH
DRAWN: KH
CHECKED: JLD

LIFT STATION 7
LANDSCAPE PLAN

CITY OF ST. PETE BEACH
LIFT STATION 07
REHABILITATION
PID# PS26-401-608-00
PINELLAS COUNY FLORIDA

DATE:
APRIL 2026

PROJECT NO.
148404108

SHEET NUMBER
L-01

LANDSCAPE SPECIFICATIONS

1. SCOPE OF WORK

1.1. THE WORK CONSISTS OF: FURNISHING ALL LABOR, MATERIALS, EQUIPMENT, TOOLS, TRANSPORTATION, AND ANY OTHER APPURTENANCES NECESSARY FOR THE COMPLETION OF THIS PROJECT AS SHOWN ON THESE PLANS.

1.2. WORK SHALL INCLUDE MAINTENANCE AND WATERING OF ALL CONTRACT PLANTING AREAS UNTIL CERTIFICATION OF ACCEPTANCE BY THE OWNER.

1.3. WORK SHALL BE COORDINATED WITH OTHER TRADES TO PREVENT CONFLICTS.

2. PROTECTION OF EXISTING AND PROPOSED SITE ELEMENTS

2.1. PROTECT ALL EXISTING SITE ITEMS, ALREADY COMPLETED OR ESTABLISHED AND DESIGNATED TO REMAIN FROM DAMAGE BY THE CONTRACTOR UNLESS OTHERWISE SPECIFIED. ALL DAMAGE RESULTING FROM THE CONTRACTOR'S WORK SHALL BE REPAIRED OR REPLACED TO THE SATISFACTION OF THE OWNER, AT NO COST TO THE OWNER.

2.2. MAINTAIN ALL NECESSARY BMP DEVICES THROUGHOUT THE DURATION OF ALL CONSTRUCTION ACTIVITIES.

2.3. WHERE APPLICABLE, SUBMIT A DETAILED PROJECT SPECIFIC WORK ZONE TRAFFIC CONTROL PLAN IN ACCORDANCE WITH THE APPROPRIATE REGULATORY AGENCY STANDARDS UNLESS THE WORK REQUIRES NOTHING MORE THAN A DIRECT APPLICATION OF FDOT STANDARD PLANS FOR ROAD AND BRIDGE CONSTRUCTION, INDEX 102-600.

2.4. THE CONTRACTOR SHALL BE RESPONSIBLE FOR LOCATING ALL UTILITIES, WHETHER PUBLIC OR PRIVATE, PRIOR TO CONSTRUCTION ACTIVITIES. THE INFORMATION AND DATA SHOWN WITH RESPECT TO EXISTING UTILITIES IS APPROXIMATE. THE OWNER AND DESIGN PROFESSIONAL SHALL NOT BE RESPONSIBLE FOR THE ACCURACY AND COMPLETENESS OF ANY SUCH INFORMATION OR DATA. THE CONTRACTOR SHALL HAVE FULL RESPONSIBILITY FOR; REVIEWING AND CHECKING ALL SUCH INFORMATION AND DATA; LOCATING ALL UTILITIES PRIOR TO CONSTRUCTION; THE SAFETY AND PROTECTION THEREOF; REPAIRING ANY DAMAGE RESULTING FROM THE WORK. THE COST OF ALL WILL BE CONSIDERED AS HAVING BEEN INCLUDED IN THE CONTRACT PRICE. THE CONTRACTOR SHALL NOTIFY ANY AFFECTED UTILITY COMPANIES OR AGENCIES IN WRITING AT LEAST 48 HOURS PRIOR TO BEGINNING CONSTRUCTION. THE CONTRACTOR SHALL NOTIFY THE LANDSCAPE ARCHITECT IN WRITING WHEN ANY CONFLICT BETWEEN UTILITIES AND THESE PLANS EXIST PRIOR TO PLANTING.

2.5. THE CONTRACTOR SHALL BE RESPONSIBLE FOR ALL UNAUTHORIZED CUTTING OR DAMAGE TO PLANT MATERIAL EXISTING OR OTHERWISE. THIS SHALL INCLUDE COMPACTION AND SPILLING OF ANY DELETERIOUS MATERIALS WITHIN THE DRIP-LINE OF EXISTING TREES TO REMAIN. PLANT MATERIAL KILLED OR DAMAGED THAT IS MISSHAPEN AND/OR UNSIGHTLY SHALL BE REPLACED WITH LIKE SIZE AND KIND TO THE SATISFACTION OF THE OWNER OR REGULATORY AGENCY AT THE COST TO THE CONTRACTOR.

2.6. SEE TREE MITIGATION PLAN AND NOTES, IF APPLICABLE.

3. SUBMITTALS

3.1. SUBMIT MATERIAL SAMPLES LISTED BELOW FOR APPROVAL, ON SITE OR AS DETERMINED BY THE OWNER. UPON APPROVAL, DELIVERY OF MATERIALS MAY COMMENCE.

MATERIAL	SAMPLE SIZE
MULCH	ONE (1) GALLON PLASTIC BAG
SOIL MIXTURE	ONE (1) GALLON PLASTIC BAG
PLANTS	ONE (1) OF EACH VARIETY (OR TAGGED IN NURSERY)

3.2. SUBMIT TESTING RESULTS OF SOIL MIXTURE AS PER SECTION 6 BELOW.

4. PLANT MATERIALS

4.1. ALL PLANT MATERIAL SHALL CONFORM TO THE SPECIFICATIONS INDICATED ON THE DRAWINGS AND SHALL BE IN ACCORDANCE WITH GRADES AND STANDARDS FOR NURSERY PLANTS, LATEST EDITION, PUBLISHED BY THE FLORIDA DEPARTMENT OF AGRICULTURE AND CONSUMER SERVICES. ALL PLANTS SHALL BE FLORIDA GRADE NO. 1 OR BETTER AS DETERMINED BY THE FLORIDA DIVISION OF PLANT INDUSTRY. ALL MATERIALS SHALL BE SUBJECT TO APPROVAL BY THE OWNER OR OWNER'S REPRESENTATIVE. NO SUBSTITUTIONS SHALL BE MADE WITHOUT WRITTEN PERMISSION FROM THE LANDSCAPE ARCHITECT AND OWNER.

4.2. ALL TREE SPECIES INSTALLED SHALL BE MATCHED IN SIZE AND SHAPE UNLESS NOTED OTHERWISE.

4.3. PLANTS SHALL BE SUBJECT TO INSPECTION AND APPROVAL AT THE PLACE OF GROWTH, UPON DELIVERY TO THE SITE, DURING PROGRESS OF THE WORK AND/OR AFTER COMPLETION. REJECTED PLANTS SHALL BE REMOVED AND REPLACED IMMEDIATELY.

5. DIGGING AND HANDLING

5.1. PROTECT ROOTS OR ROOT BALLS OF PLANTS AT ALL TIMES FROM SUN, DRYING WINDS, WATER AND FREEZING, AS NECESSARY UNTIL PLANTING. NO PLANT MATERIAL SHALL BE HANDLED BY STEMS.

6. SOIL MIXTURE (PLANTING MEDIUM, PLANTING MIX, TOPSOIL MIX)

6.1. TEST EXISTING SOIL AND AMEND AS NECESSARY IN ACCORDANCE WITH THE GUIDELINES BELOW:

6.2. SOIL MIXTURE (PLANTING MEDIUM FOR PLANT PITS) SHALL CONSIST OF TWO PARTS OF TOPSOIL AND ONE PART SAND, AS DESCRIBED BELOW. SUBMIT SAMPLES AND PH TESTING RESULTS OF SOIL MIXTURE FOR OWNER'S REPRESENTATIVE APPROVAL PRIOR TO PLANT INSTALLATION OPERATIONS COMMENCE.

6.3. TOPSOIL FOR USE IN PREPARING SOIL MIXTURE FOR BACKFILLING PLANT PITS SHALL BE FERTILE, FRIABLE, AND OF A LOAMY CHARACTER; REASONABLY FREE OF SUBSOIL, CLAY LUMPS, BRUSH WEEDS AND OTHER LITTER; FREE OF ROOTS, STUMPS, STONES LARGER THAN 2" IN ANY DIRECTION, AND OTHER EXTRANEOUS OR TOXIC MATTER HARMFUL TO PLANT GROWTH. IT SHALL CONTAIN THREE (3) TO FIVE (5) PERCENT DECOMPOSED ORGANIC MATTER AND HAVE A PH BETWEEN 5.5 AND 7.0.

6.4. SAND SHALL BE COARSE, CLEAN, WELL-DRAINING, NATIVE SAND.

6.5. PLANT TREES IN THE EXISTING NATIVE SOIL ON SITE, UNLESS DETERMINED TO BE UNSUITABLE - AT WHICH POINT THE CONTRACTOR SHALL CONTACT OWNER'S REPRESENTATIVE TO DISCUSS ALTERNATE RECOMMENDATION PRIOR TO PLANTING.

7. WATER

7.1. PROVIDE WATER NECESSARY FOR PLANTING ESTABLISHMENT AND MAINTENANCE. WATER SHALL BE OF SATISFACTORY QUALITY TO SUSTAIN ADEQUATE PLANT GROWTH AND SHALL NOT CONTAIN HARMFUL, NATURAL OR MAN-MADE ELEMENTS DETRIMENTAL TO PLANTS.

7.2. WATERING/IRRIGATION RESTRICTIONS MAY APPLY - REFER TO PROPERTY'S JURISDICTIONAL AUTHORITY.

8. FERTILIZER

8.1. PROVIDE FERTILIZER APPLICATION SCHEDULE TO OWNER, AS APPLICABLE TO SOIL TYPE, PLANT INSTALLATION TYPE, AND SITE'S PROPOSED USE. SUGGESTED FERTILIZER TYPES SHALL BE ORGANIC OR OTHERWISE NATURALLY-DERIVED.

8.2. FERTILIZER RESTRICTIONS MAY APPLY - REFER TO PROPERTY'S JURISDICTIONAL AUTHORITY.

9. MULCH

9.1. MOISTEN MULCH MATERIAL AT THE TIME OF APPLICATION TO PREVENT WIND DISPLACEMENT, AND APPLIED AT A MINIMUM DEPTH OF THREE (3) INCHES. CONTRACTOR SHALL CLEAR MULCH FROM WITHIN A SIX (6) INCH RADIUS AROUND TRUNK / STEM FLARE. MULCH SHALL BE "FLORIMULCH", EUCALYPTUS MULCH, OR SIMILAR SUSTAINABLY HARVESTED MULCH UNLESS SPECIFIED OTHERWISE.

9.2. PROVIDE A THREE (3) INCH MINIMUM LAYER OF SPECIFIED MULCH OVER THE ENTIRE AREA OF EACH PLANTING BED AND TREE RING (SIX (6) FOOT DIAMETER MINIMUM).

10. CONTAINER GROWN STOCK

10.1. CONTAINER GROWN PLANTS SHALL HAVE BEEN GROWN IN IT'S CONTAINER SUFFICIENTLY LONG ENOUGH FOR THE NEW FIBROUS ROOTS TO HAVE DEVELOPED SO THAT THE ROOT MASS WILL RETAIN ITS SHAPE AND HOLD TOGETHER WHEN REMOVED FROM THE CONTAINER.

10.2. INSUFFICIENT OR POORLY STRUCTURED ROOT SYSTEMS ARE NOT ACCEPTABLE AND WILL BE REJECTED.

10.3. ROOTS PLUS GROWER (RPG) PRODUCTS SHALL BE USED WHERE SPECIFIED.

11. MATERIALS LIST

11.1. ALL QUANTITIES ARE PROVIDED FOR CONVENIENCE ONLY. CONTRACTOR SHALL CONFIRM ALL QUANTITIES PER PLAN PRIOR TO BIDDING AND CONSTRUCTION.

12. FINE GRADING

12.1. THE CONTRACTOR SHALL BE RESPONSIBLE FOR FINE GRADING WHICH CONSISTS OF FINAL FINISHED GRADING (INCLUDING ADDITIONAL SOIL MIXTURE AS NEEDED) FOR LAWN AND PLANTING AREAS THAT HAVE BEEN ROUGH GRADED BY OTHERS. FINISH GRADE SHALL ACCOUNT FOR THICKNESS OF SOD AND/OR MULCH DEPTH.

12.2. ALL PLANTING AREAS SHALL BE GRADED AND MAINTAINED FOR POSITIVE DRAINAGE TO SURFACE/SUBSURFACE STORM DRAIN SYSTEMS. AREAS ADJACENT TO BUILDINGS SHALL SLOPE AWAY FROM THE BUILDINGS. REFER TO CIVIL ENGINEER'S PLANS FOR FINAL GRADES, IF APPLICABLE.

13. PLANTING PROCEDURES

13.1. CLEAN WORK AND SURROUNDING AREAS OF ALL RUBBISH OR OBJECTIONABLE MATTER DAILY. REMOVE ALL MORTAR, CEMENT, AND TOXIC MATERIAL FROM THE SURFACE OF ALL PLANT BEDS. DO NOT MIX THESE MATERIALS WITH THE SOIL SHOULD THE CONTRACTOR FIND SUCH SOIL CONDITIONS BENEATH THE SOIL WHICH WILL IN ANY WAY ADVERSELY AFFECT THE PLANT GROWTH, IMMEDIATELY CALL IT TO THE ATTENTION OF THE OWNER'S REPRESENTATIVE.

13.2. LOCATE, MAINTAIN AND PROTECT ALL UTILITIES ABOVE AND BELOW GROUND. CALL SUNSHINE STATE ONE CALL OF FLORIDA, INC. (811) TO LOCATE UTILITIES AT LEAST 48 HOURS PRIOR TO CONSTRUCTION.

13.3. NOTIFY LANDSCAPE ARCHITECT IN WRITING IMMEDIATELY IF CONFLICT(S) EXIST WITH PROPOSED TREE LOCATIONS AND EXISTING OVERHEAD POWER LINES IN ACCORDANCE WITH SETBACK REQUIREMENTS OF FPL'S "RIGHT TREE, RIGHT PLACE" PROGRAM. CONSULT THE UNIVERSITY OF FLORIDA'S "TREES AND POWER LINE" WEBSITE FOR TREE SIZE CATEGORIES.

13.4. NOTIFY LANDSCAPE ARCHITECT IN WRITING IMMEDIATELY IF CONFLICT(S) EXIST WITH PROPOSED TREE LOCATIONS AND EXISTING / PROPOSED LIGHT POLES. TREES INSTALLED IN CONFLICT WITH LIGHT POLES ARE SUBJECT TO RELOCATION AT THE EXPENSE OF THE CONTRACTOR.

13.5. REMOVE ALL EXISTING AND IMPORTED DELETERIOUS MATERIAL AND SUB-BASE FROM ALL LANDSCAPE PLANTING AREAS TO A MINIMUM DEPTH OF 36" OR TO NATIVE SOIL. CONTRACTOR IS RESPONSIBLE TO BACKFILL THESE PLANTING AREAS TO ROUGH FINISHED GRADE AS NEEDED WITH CLEAN SOIL MIXTURE.

13.6. FURNISH NURSERY'S CERTIFICATE OF COMPLIANCE WITH ALL APPLICABLE REQUIREMENTS. COMPLY WITH APPLICABLE FEDERAL, STATE, COUNTY, AND LOCAL REGULATIONS GOVERNING LANDSCAPE MATERIALS AND WORK.

13.7. EXCAVATE ALL PLANTING PITS IN ACCORDANCE WITH LANDSCAPE DETAILS PROVIDED. TEST ALL TREE PITS WITH WATER BEFORE PLANTING TO ASSURE PROPER DRAINAGE PERCOLATION IS AVAILABLE. IF POOR DRAINAGE EXISTS, NOTIFY LANDSCAPE ARCHITECT IMMEDIATELY IN WRITING. NO ALLOWANCE WILL BE MADE FOR LOST PLANTS DUE TO IMPROPER DRAINAGE. CONTRACTOR SHALL ENSURE ELIMINATION OF ALL AIR POCKETS AROUND ROOTS.

13.8. SET TREES AND SHRUBS STRAIGHT AT AN ELEVATION THAT, AFTER SETTLEMENT, THE PLANT CROWN WILL STAND ONE (1) TO TWO (2) INCHES ABOVE GRADE. EACH PLANT SHALL BE SET IN THE CENTER OF THE PIT. PLANTING SOIL MIXTURE SHALL BE BACK FILLED, THOROUGHLY TAMPED AROUND THE BALL, AND SETTLED BY WATER (AFTER TAMPING).

13.9. DO NOT COVER TOP OF BALL WITH SOIL MIXTURE. ALL BURLAP, ROPE, WIRES, BASKETS, ETC., SHALL BE REMOVED FROM UPPER ONE THIRD (1/3) OF ROOT BALLS.

13.10. ALL SUCKER GROWTH AND BROKEN OR BADLY DAMAGED BRANCHES SHALL BE REMOVED WITH A CLEAN CUT IN ACCORDANCE WITH ANSI A-300.

13.11. SHRUBS AND GROUND COVER PLANTS SHALL BE SPACED IN ACCORDANCE WITH THE DRAWINGS, LANDSCAPE DETAILS AND AS INDICATED ON THE PLANT LIST.

13.12. TREE GUYING AND BRACING SHALL BE INSTALLED BY THE CONTRACTOR IN ACCORDANCE WITH THE PLANS TO INSURE STABILITY AND MAINTAIN TREES IN A PLUMB AND UPRIGHT POSITION.

13.13. FAILURE TO FOLLOW THE ABOVE PLANTING PROCEDURE SHALL MAKE THE CORRECTIVE MEASURES THE RESPONSIBILITY OF THE CONTRACTOR.

14. LAWN SODDING

14.1. THE WORK CONSISTS OF LAWN BED PREPARATION, SOIL PREPARATION, AND SODDING NECESSARY TO PRODUCE A TURF GRASS LAWN ACCEPTABLE TO THE OWNER.

14.2. ALL AREAS THAT ARE TO BE SODDED SHALL BE CLEARED OF ANY ROUGH GRASS, WEEDS, AND DEBRIS TO A MINIMUM DEPTH OF THREE (3) INCHES. PROVIDE ONE (1) INCH OF TOPSOIL ACROSS ENTIRE LAWN BED AND MIX THROUGHLY INTO TOP FOUR (4) INCHES OF SOIL TO BRING THE GROUND TO AN EVEN GRADE. THE ENTIRE SURFACE SHALL BE ROLLED WITH A ROLLER WEIGHING NOT MORE THAN ONE-HUNDRED (100) POUNDS PER FOOT OF WIDTH. DURING THE ROLLING, ALL DEPRESSIONS CAUSED BY SETTLEMENT SHALL BE FILLED WITH ADDITIONAL TOPSOIL AND THE SURFACE SHALL BE REGRADED AND ROLLED UNTIL PRESENTING A SMOOTH AND EVEN FINISH TO THE REQUIRED GRADE.

14.3. HAND RAKE LAWN BED UNTIL ALL BUMPS AND DEPRESSIONS ARE REMOVED. WET PREPARED AREA THOROUGHLY.

14.4. SOD ALL AREAS THAT ARE NOT PAVED OR PLANTED AS DESIGNATED ON THE DRAWINGS WITHIN THE CONTRACT LIMITS, UNLESS SPECIFICALLY NOTED OTHERWISE.

14.5. THE SOD SHALL BE CERTIFIED TO MEET FLORIDA STATE PLANT BOARD SPECIFICATIONS, ABSOLUTELY TRUE TO VARIETAL TYPE, AND FREE FROM WEEDS, FUNGUS, INSECTS AND DISEASE OF ANY KIND.

14.6. SOD PANELS SHALL BE LAID TIGHTLY TOGETHER SO AS TO MAKE A SOLID SODDED LAWN AREA. SOD SHALL BE LAID UNIFORMLY AGAINST THE EDGES OF ALL CURBS AND OTHER HARDSCAPE ELEMENTS, PAVED AND PLANTED AREAS.

14.7. IMMEDIATELY FOLLOWING SOD LAYING, ROLL LAWN AREAS WITH A LAWN ROLLER AND THEN THOROUGHLY IRRIGATED.

14.8. IF, IN THE OPINION OF THE OWNER, TOP-DRESSING IS NECESSARY AFTER ROLLING TO FILL THE VOIDS BETWEEN THE SOD PANELS AND TO EVEN OUT INCONSISTENCIES IN THE SOD, CLEAN SAND, AS APPROVED BY THE OWNER'S REPRESENTATIVE, SHALL BE UNIFORMLY SPREAD OVER THE ENTIRE SURFACE OF THE SOD AND THOROUGHLY WATERED IN. FERTILIZE INSTALLED SOD AS ALLOWED BY PROPERTY'S JURISDICTIONAL AUTHORITY.

14.9. DURING DELIVERY, PRIOR TO, AND DURING THE PLANTING OF THE LAWN AREAS, THE SOD PANELS SHALL AT ALL TIMES BE PROTECTED FROM EXCESSIVE DRYING AND UNNECESSARY EXPOSURE OF THE ROOTS TO THE SUN. ALL SOD SHALL BE STACKED SO AS NOT TO BE DAMAGED BY EXCESSIVE HEAT AND MOISTURE.

14.10. WITHIN THE CONTRACT LIMITS, PRODUCE AND MAINTAIN A DENSE, WELL ESTABLISHED LAWN. THE CONTRACTOR SHALL BE RESPONSIBLE FOR THE REPAIR AND RE-SODDING OF ALL ERODED, SUNKEN OR BARE SPOTS UNTIL CERTIFICATION OF ACCEPTANCE BY THE OWNER'S REPRESENTATIVE. REPAIRED SODDING SHALL BE ACCOMPLISHED AS IN THE ORIGINAL WORK (INCLUDING REGRADING IF NECESSARY).

15. CLEANUP

15.1. UPON COMPLETION OF ALL PLANTING WORK AND BEFORE FINAL ACCEPTANCE, REMOVE ALL MATERIAL, EQUIPMENT, AND DEBRIS RESULTING FROM HIS WORK. ALL PAVED AREAS SHALL BE CLEANED AND THE SITE LEFT IN A NEAT AND ACCEPTABLE CONDITION AS APPROVED BY THE OWNER'S REPRESENTATIVE.

16. PLANT MATERIAL MAINTENANCE

16.1. ALL PLANT MATERIAL SHALL BE MAINTAINED BY WATERING, CULTIVATING, SPRAYING, AND ALL OTHER OPERATIONS (SUCH AS RE-STAKING OR REPAIRING GUY SUPPORTS) AS NECESSARY TO INSURE HEALTHY AND VIGOROUS GROWING CONDITIONS BY THE CONTRACTOR UPON DELIVERING TO THE SITE AND UNTIL FINAL ACCEPTANCE OF WORK.

17. FINAL INSPECTION AND ACCEPTANCE OF WORK

17.1. ALL PLANT BEDS SHALL BE KEPT FREE OF NOXIOUS WEEDS UNTIL FINAL ACCEPTANCE OF WORK. PRIOR TO FINAL INSPECTION, TREAT ALL PLANTING BEDS WITH AN APPROVED PRE-EMERGENT HERBICIDE PER MANUFACTURER RECOMMENDATIONS. (AS ALLOWED BY JURISDICTIONAL AUTHORITY)

17.2. PROVIDE WATERING/IRRIGATION SCHEDULE FOR ALL PLANT MATERIAL TO OWNER. OBSERVE ALL APPLICABLE WATERING RESTRICTIONS AS SET FORTH BY THE PROPERTY'S JURISDICTIONAL AUTHORITY.

17.3. UPON COMPLETION OF ALL WORK, A FINAL INSPECTION SHALL BE PERFORMED BY THE OWNER AND/OR OWNER'S REPRESENTATIVE. ALL PLANTING, CONSTRUCTION AND ALL OTHER INCIDENTAL WORK PERTAINING TO THIS CONTRACT SHALL BE INSPECTED FOR COMPLIANCE WITH THE CONTRACT DOCUMENTS. ANY ITEMS FOUND TO NOT BE IN COMPLIANCE SHALL BE CORRECTED AT THE COST OF THE CONTRACTOR.

18. WARRANTY

18.1. THE LIFE AND SATISFACTORY CONDITION OF ALL PLANT MATERIAL INSTALLED BY THE LANDSCAPE CONTRACTOR SHALL BE WARRANTED BY THE CONTRACTOR FOR A MINIMUM OF ONE (1) CALENDAR YEAR COMMENCING AT THE TIME OF CERTIFICATION AND ACCEPTANCE OF THE WORK BY THE OWNER AND/OR OWNER'S REPRESENTATIVE.

18.2. ANY PLANT NOT FOUND IN A HEALTHY GROWING CONDITION THROUGHOUT THE WARRANTY PERIOD SHALL BE REMOVED FROM THE SITE AND REPLACED AS SOON AS WEATHER CONDITIONS PERMIT. ALL REPLACEMENTS SHALL BE PLANTS OF THE SAME KIND AND SIZE AS SPECIFIED IN THE PLANT LIST. THEY SHALL BE FURNISHED, PLANTED AND MULCHED AS SPECIFIED AT NO ADDITIONAL COST TO THE OWNER. ANY REPLACED PLANT MATERIAL SHALL BE SUBJECT TO A NEW ONE (1) YEAR WARRANTY.

18.3. IN THE EVENT THE OWNER DOES NOT CONTRACT WITH THE CONTRACTOR FOR LANDSCAPE AND IRRIGATION MAINTENANCE, THE CONTRACTOR SHOULD VISIT THE PROJECT SITE PERIODICALLY DURING THE ONE (1) YEAR WARRANTY PERIOD TO EVALUATE MAINTENANCE PROCEDURES BEING PERFORMED BY THE OWNER. CONTRACTOR SHALL NOTIFY THE OWNER IN WRITING OF MAINTENANCE PROCEDURES OR CONDITIONS WHICH THREATEN VIGOROUS AND HEALTHY PLANT GROWTH.

19. ABBREVIATIONS

B&B -	BALLED AND BURLAPPED
BR -	BARE ROOT
CAL -	CALIPER
CT -	CLEAR TRUNK
DBH -	DIAMETER AT BREAST HEIGHT
FG -	FIELD GROWN
FTG -	FULL TO GROUND
GW -	GREY WOOD
HO -	HARDENED OFF
OA -	OVERALL HEIGHT
RPG -	ROOTS PLUS GROWER

GROUNDWATER / DEWATERING NOTE:
THE PRESENCE OF GROUNDWATER SHOULD BE ANTICIPATED ON THIS PROJECT. CONTRACTOR'S BID SHALL INCLUDE CONSIDERATION FOR THIS ISSUE. WHEN PERFORMING GRADING OPERATIONS DURING PERIODS OF WET WEATHER, PROVIDE ADEQUATE DEWATERING, DRAINAGE AND GROUND WATER MANAGEMENT TO CONTROL MOISTURE OF SOILS.

811 KNOW WHAT'S BELOW ALWAYS CALL 811 BEFORE YOU DIG
It's fast. It's free. It's the law.
www.callsunshine.com

No.	Revisions	Date	By
1	BID ADDENDUM #5	4/16/2026	JLD

Kimley»Horn
© 2026 KIMLEY-HORN AND ASSOCIATES, INC.
200 CENTRAL AVENUE, SUITE 600
ST. PETERSBURG, FL 33701
P. 727 547 3999
WWW.KIMLEY-HORN.COM REGISTRY NO. 35106

DESIGN ENGINEER: JENNIFER L. DAOULAS
FL LICENSE NUMBER 66673369
DATE:

SCALE: AS NOTED
DESIGN: KH
DRAWN: KH
CHECKED: JLD

LANDSCAPE NOTES

CITY OF ST. PETE BEACH
LIFT STATION 07
REHABILITATION
PID# PS26-401-608-00
PINELLAS COUNTY FLORIDA

DATE:
APRIL 2026

PROJECT NO.
148404108

SHEET NUMBER
L-02

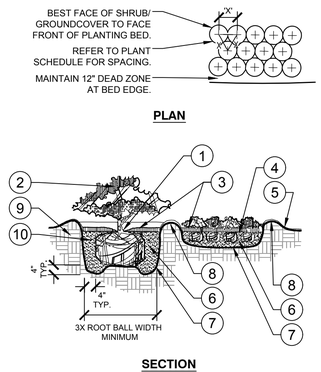

1. TOP OF SHRUB ROOTBALLS TO BE PLANTED 1" - 2" HIGH WITH SOIL MOUNDING UP TO THE TOP OF ROOTBALL.
2. PRUNE ALL SHRUBS TO ACHIEVE A UNIFORM MASS/HEIGHT.
3. 3" MULCH LAYER AS SPECIFIED.
4. EXCAVATE ENTIRE BED SPECIFIED FOR GROUNDCOVER BED.
5. FINISHED GRADE (SEE GRADING PLAN).
6. PREPARED PLANTING SOIL AS SPECIFIED. (SEE LANDSCAPE NOTES) NOTE: WHEN GROUND-COVERS AND SHRUBS USED IN MASSES, ENTIRE BED TO BE AMENDED WITH PLANTING SOIL MIX AS SPECIFIED.
7. SCARIFY OF PLANTING PIT SIDES AND BOTTOM.
8. 4" HIGH BERM FIRMLY COMPACTED.
9. UNDISTURBED NATIVE SOIL.
10. FERTILIZER TABLETS (MAX 3" DEEP)

NOTES:

A. CONTRACTOR SHALL ASSURE PERCOLATION OF ALL PLANTING PITS PRIOR TO INSTALLATION.

B. WHEN SHRUBS ARE PRUNED IN MASSES, PRUNE ALL SHRUBS TO ACHIEVE UNIFORM MASS / HEIGHT.

C. ALL SHRUBS AND GROUNDCOVERS SHALL BE PLUMB VERTICALLY, UNLESS OTHERWISE DIRECTED BY OWNERS REPRESENTATIVE.

1 SHRUB/GROUNDCOVER PLANTING

NTS P-LI-03

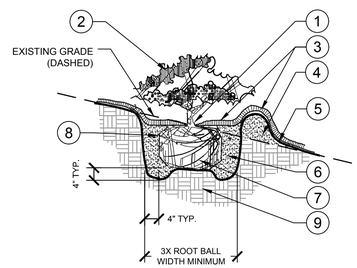

1. TOP OF SHRUB ROOTBALLS TO BE PLANTED 1" - 2" HIGH WITH SOIL MOUNDING UP TO THE TOP OF ROOTBALL.
2. PRUNE SHRUBS AS DIRECTED BY OWNER'S REPRESENTATIVE.
3. 3" MINIMUM OF MULCH AS SPECIFIED. WHERE SHRUBS ARE PLACED IN MASSES, MULCH SHALL BE SPREAD IN A CONTINUOUS BED.
4. SOIL BERM TO HOLD WATER. TOP OF PLANTING PIT 'BERM' TO BE LEVEL ACROSS PIT. SLOPE DOWNHILL PORTION OF BERM AS REQUIRED TO MEET EXISTING GRADE. MULCH OVER EXPOSED TOPSOIL.
5. FINISHED GRADE (SEE GRADING PLAN)
6. PREPARED PLANTING SOIL AS SPECIFIED. (SEE LANDSCAPE NOTES).
7. SCARIFY SIDES AND BOTTOM OF PLANTING PIT.
8. FERTILIZER TABLETS (MAX 3" DEEP).
9. UNDISTURBED NATIVE SOIL

NOTES:

A. CONTRACTOR SHALL ASSURE PERCOLATION OF ALL PLANTING PITS PRIOR TO INSTALLATION.

B. WHEN SHRUBS ARE PRUNED IN MASSES, PRUNE ALL SHRUBS TO ACHIEVE UNIFORM MASS / HEIGHT.

C. ALL SHRUBS AND GROUNDCOVERS SHALL BE PLUMB VERTICALLY, UNLESS OTHERWISE DIRECTED BY OWNERS REPRESENTATIVE.

2 SHRUB/GROUNDCOVER PLANTING ON A SLOPE

NTS P-LI-05

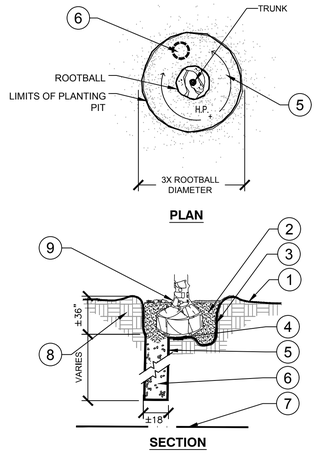

1. FINISH GRADE (SEE GRADING PLANS).
2. BACKFILL WITH PREPARED PLANTING SOIL MIX AS SPECIFIED.
3. FILTER CLOTH, MIRAFI 500X OR BETTER.
4. SLOPE BOTTOM TO DRAIN.
5. AUGURED HOLE Ø ±18" PENETRATE THROUGH OCCLUDING LAYER TO WATER TABLE OR TO A DEPTH OF 7' TO ASSURE PROPER PERCOLATION.
6. BACKFILL WITH 1/2" - 3/4" GRAVEL TO REQUIRED DEPTH THROUGH OCCLUDING LAYER TO ASSURE PROPER PERCOLATION.
7. WATER TABLE. (DEPTH VARIES)
8. UNDISTURBED NATIVE SOIL.
9. SET ROOTBALL ON UNDISTURBED STABLE SUBSOIL SO THAT TOP OF ROOT BALL IS 1" ABOVE FINISHED GRADE.

3 POOR DRAINAGE CONDITIONS

NTS P-LI-09

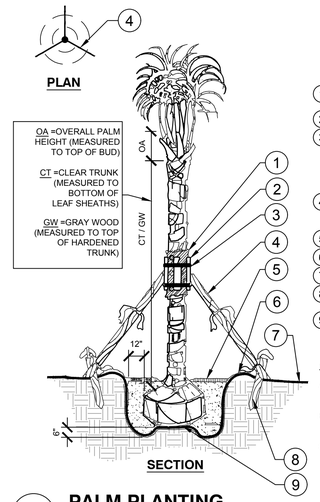

1. 5 LAYERS OF BURLAP TO PROTECT TRUNK.
2. FIVE 2" X 4" X 18" WOOD BATTENS.
3. SECURE BATTENS WITH 2- 3/4" CARBON STEEL BANDS TO HOLD BATTENS IN PLACE. NO NAILS SHALL BE DRIVEN INTO PALM. HEIGHT OF BATTENS SHALL BE LOCATED IN RELATION TO THE HEIGHT OF THE PALM FOR ADEQUATE BRACING.
4. (3) 2"X4"X8' SUPPORTS. NAIL (DRILL AN NAIL IF NECESSARY) TO BATTENS AND 2" 4" STAKES. STAIN DARK BROWN.
5. 3" SPECIFIED MULCH
6. BERM SOIL TO HOLD WATER.
7. FINISH GRADE
8. 2X4X24" (MIN) P.T. WOOD STAKES (TYP.) NAIL TO SUPPORT POLES.
9. PREPARED PLANTING SOIL AS SPECIFIED. (SEE LANDSCAPE NOTES).

NOTES:

A. FINAL TREE STAKING DETAILS AND PLACEMENT TO BE APPROVED BY OWNER.

B. ALL TREE STAKING IS TO BE WITHIN MULCH BED AREA OUTSIDE TREE PIT.

C. CONTRACTOR SHALL ASSURE PERCOLATION OF ALL PLANTING PITS PRIOR TO INSTALLATION - REFER TO POOR DRAINAGE CONDITION DETAIL.

4 PALM PLANTING

NTS P-LI-11

GROUNDWATER / DEWATERING NOTE:

THE PRESENCE OF GROUNDWATER SHOULD BE ANTICIPATED ON THIS PROJECT. CONTRACTOR'S BID SHALL INCLUDE CONSIDERATION FOR THIS ISSUE. WHEN PERFORMING GRADING OPERATIONS DURING PERIODS OF WET WEATHER, PROVIDE ADEQUATE DEWATERING, DRAINAGE AND GROUND WATER MANAGEMENT TO CONTROL MOISTURE OF SOILS.

811 KNOW WHAT'S BELOW ALWAYS CALL 811 BEFORE YOU DIG
It's fast. It's free. It's the law.
www.callsunshine.com

No.	Revisions	Date	By
1	BID ADDENDUM #5	4/16/2026	JLD

Kimley»Horn
© 2026 KIMLEY-HORN AND ASSOCIATES, INC.
200 CENTRAL AVENUE, SUITE 600
ST. PETERSBURG, FL 33701
P. 727 547 3999
WWW.KIMLEY-HORN.COM REGISTRY NO. 35106

DESIGN ENGINEER:
JENNIFER L. DAOULAS
FL LICENSE NUMBER
66673369
DATE:

SCALE: AS NOTED
DESIGN: KH
DRAWN: KH
CHECKED: JLD

LANDSCAPE DETAILS

CITY OF ST. PETE BEACH
LIFT STATION 07
REHABILITATION
PID# PS26-401-608-00
PINELLAS COUNY FLORIDA

DATE:
APRIL 2026

PROJECT NO.
148404108

SHEET NUMBER
L-03



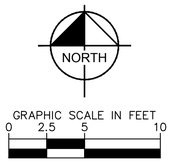

IRRIGATION SCHEDULE

SYMBOL	MANUFACTURER/MODEL/DESCRIPTION	QTY
LST SST RST	HUNTER MP STRIP PROS-12-PRS40-CV-R SHRUB ROTATOR, 12IN. POP-UP WITH FACTORY INSTALLED CHECK VALVE, RECLAIMED BODY CAP, PRESSURE REGULATED TO 40 PSI, MP ROTATOR NOZZLE. LCS=IVORY LEFT STRIP, SS=BROWN SIDE STRIP, RCS=COPPER RIGHT STRIP ON PRS40 BODY.	1
1000	HUNTER MP1000 PROS-12-PRS40-CV-R SHRUB ROTATOR, 12IN. POP-UP WITH CHECK VALVE, PURPLE CAP, PRESSURE REGULATED TO 40 PSI, MP ROTATOR NOZZLE. M=MAROON ADJ ARC 90 TO 210, L=LIGHT BLUE 210 TO 270 ARC, O=OLIVE 360 ARC ON PRS40 BODY.	9

SYMBOL	MANUFACTURER/MODEL/DESCRIPTION	QTY
	HUNTER ICV-G-FS 1IN., 1-1/2IN., 2IN., AND 3IN. PLASTIC ELECTRIC REMOTE CONTROL VALVES, GLOBE CONFIGURATION, WITH NPT THREADED INLET/OUTLET, FOR COMMERCIAL/MUNICIPAL USE. WITH FILTER SENTRY.	1
	IRRIGATION LATERAL LINE: PVC CLASS 200 SDR 21	129.3 LF
	IRRIGATION MAINLINE: PVC SCHEDULE 40	5.2 LF

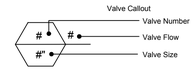

IRRIGATION CONTRACTOR IS RESPONSIBLE FOR PERFORMING ALL NECESSARY MODIFICATIONS REQUIRED TO MEET THE SCHEMATIC INTENT OF THESE PLANS PRIOR TO SUBMITTING PROPOSAL. THESE PLANS OUTLINE THE OVERALL LAYOUT OF THE SYSTEM AND IT SHALL BE THE RESPONSIBILITY OF THE CONTRACTOR TO ZONE THE SYSTEM ACCORDINGLY BASED ON FLOW AND PRESSURE AVAILABLE. CONTRACTOR SHALL BE RESPONSIBLE FOR VERIFYING THE FOLLOWING BUT NOT LIMITED TO AVAILABLE FLOW, AVAILABLE PRESSURE, CONNECTION ASSEMBLY, CAPACITY OF THE SYSTEM.

CONTRACTOR TO FIELD LOCATE EXISTING IRRIGATION EQUIPMENT(CONTROLLER, PUMP, ETC.). CONTRACTOR TO TURN ON IRRIGATION SYSTEM AND EVALUATE PERFORMANCE. MODIFICATION TO THE SYSTEM SHALL BE MADE BY THE GENERAL CONTRACTOR. CONTRACTOR RESPONSIBLE FOR PROVIDING THE PROPER WATER TO ALL NEW VEGETATION CONDUCIVE FOR ESTABLISHING/ MAINTAINING THE HEALTH AND VIGOR OF ALL PLANT MATERIAL. COORDINATE ANY REPAIRS/MODIFICATIONS WITH ALL ASSOCIATED PARTIES INVOLVED. CONTRACTOR RESPONSIBLE FOR ENSURING ALL NEW/EXISTING PLANT MATERIAL TO BE PROPERLY IRRIGATED.

VALVE SCHEDULE

NUMBER	MODEL	SIZE	TYPE	GPM	PSI	PSI @ POC	PRECIP
1	HUNTER ICV-G-FS	2"	SHRUB ROTARY	3.35	40.8	54.8	0.36 in/h

GROUNDWATER / DEWATERING NOTE:
THE PRESENCE OF GROUNDWATER SHOULD BE ANTICIPATED ON THIS PROJECT. CONTRACTOR'S BID SHALL INCLUDE CONSIDERATION FOR THIS ISSUE. WHEN PERFORMING GRADING OPERATIONS DURING PERIODS OF WET WEATHER, PROVIDE ADEQUATE DEWATERING, DRAINAGE AND GROUND WATER MANAGEMENT TO CONTROL MOISTURE OF SOILS.

811 KNOW WHAT'S BELOW ALWAYS CALL 811 BEFORE YOU DIG
It's fast. It's free. It's the law.
www.callsunshine.com

No.	Revisions	Date	By
1	BID ADDENDUM #5	4/16/2026	JLD

Kimley»Horn

© 2026 KIMLEY-HORN AND ASSOCIATES, INC.
200 CENTRAL AVENUE, SUITE 600
ST. PETERSBURG, FL 33701
P. 727 547 3999
WWW.KIMLEY-HORN.COM REGISTRY NO. 35106

DESIGN ENGINEER:
JENNIFER L. DAOULAS
FL LICENSE NUMBER
66673369
DATE:

SCALE: AS NOTED
DESIGN: KH
DRAWN: KH
CHECKED: JLD

LIFT STATION 7
IRRIGATION PLAN

CITY OF ST. PETE BEACH
LIFT STATION 07
REHABILITATION
PID# PS26-401-608-00
PINELLAS COUNY FLORIDA

DATE:
APRIL 2026

PROJECT NO.
148404108

SHEET NUMBER
IR-01

IRRIGATION SPECIFICATIONS

1. SCOPE OF WORK

1.1. THE WORK CONSISTS OF: FURNISHING ALL LABOR, MATERIALS, EQUIPMENT, TOOLS, TRANSPORTATION, AND ANY OTHER APPURTENANCES NECESSARY FOR THE COMPLETION OF THIS PROJECT AS SHOWN ON THESE PLANS.

1.2. INSTALL THE IRRIGATION SYSTEM TO PROVIDE 100% UNIFORM COVERAGE INCLUDING ANY CHANGES MADE IN THE LAYOUT DUE TO FIELD CONDITIONS. ALL FIELD CHANGES SHALL BE IN ACCORDANCE WITH THESE PLANS. ANY SYSTEMS THAT REQUIRE FIELD ADJUSTMENT TO PROVIDE FULL AND UNIFORM COVERAGE SHALL BE MADE PRIOR TO FINAL ACCEPTANCE AT THE DIRECTION OF THE OWNER'S REPRESENTATIVE AT NO ADDITIONAL COST.

1.3. SECURE ANY AND ALL NECESSARY PERMITS FOR THE WORK PRIOR TO COMMENCEMENT OF OPERATIONS ON-SITE. SEND COPIES OF THE PERMIT(S) TO THE OWNER'S REPRESENTATIVE. FOR WORK LOCATED IN THE R.O.W., CONFORM TO THE STANDARDS AND SPECIFICATIONS OF THE AGENCY HAVING JURISDICTION.

1.4. WORK SHALL BE COORDINATED WITH OTHER TRADES TO PREVENT CONFLICTS.

2. PROTECTION OF EXISTING AND PROPOSED SITE ELEMENTS

2.1. ALL EXISTING SITE ITEMS, ALREADY COMPLETED OR ESTABLISHED AND DESIGNATED TO REMAIN SHALL BE PROTECTED FROM DAMAGE BY THE CONTRACTOR UNLESS OTHERWISE SPECIFIED. ALL DAMAGE RESULTING FROM THE CONTRACTOR'S WORK SHALL BE REPAIRED OR REPLACED TO THE SATISFACTION OF THE OWNER, AT NO COST TO THE OWNER.

2.2. MAINTAIN ALL NECESSARY BMP DEVICES THROUGHOUT THE DURATION OF ALL CONSTRUCTION ACTIVITIES.

2.3. WHERE APPLICABLE, SUBMIT A DETAILED PROJECT SPECIFIC WORK ZONE TRAFFIC CONTROL PLAN IN ACCORDANCE WITH THE APPROPRIATE REGULATORY AGENCY STANDARDS UNLESS THE WORK REQUIRES NOTHING MORE THAN A DIRECT APPLICATION OF FDOT STANDARD PLANS FOR ROAD AND BRIDGE CONSTRUCTION, INDEX 102-600.

2.4. LOCATE ALL UTILITIES, WHETHER PUBLIC OR PRIVATE, PRIOR TO CONSTRUCTION ACTIVITIES. THE INFORMATION AND DATA SHOWN WITH RESPECT TO UTILITIES IS APPROXIMATE. THE OWNER AND DESIGN PROFESSIONAL SHALL NOT BE RESPONSIBLE FOR THE ACCURACY AND COMPLETENESS OF ANY SUCH INFORMATION OR DATA. THE CONTRACTOR SHALL HAVE FULL RESPONSIBILITY FOR; REVIEWING AND CHECKING ALL SUCH INFORMATION AND DATA; LOCATING ALL UTILITIES PRIOR TO CONSTRUCTION; THE SAFETY AND PROTECTION THEREOF; AND REPAIRING ANY DAMAGE RESULTING FROM THE WORK. THE COST OF ALL WILL BE CONSIDERED AS HAVING BEEN INCLUDED IN THE CONTRACT PRICE. NOTIFY ANY AFFECTED UTILITY COMPANIES OR AGENCIES IN WRITING AT LEAST 48 HOURS PRIOR TO BEGINNING CONSTRUCTION. NOTIFY THE LANDSCAPE ARCHITECT IN WRITING WHEN ANY CONFLICT BETWEEN UTILITIES AND THESE PLANS EXIST PRIOR TO INSTALLATION.

3. SUBMITTALS

3.1. SUBMIT FULL AND COMPLETE SHOP DRAWINGS OF ALL IRRIGATION EQUIPMENT AS SHOWN ON THESE PLANS TO OWNER'S REPRESENTATIVE FOR APPROVAL PRIOR TO INSTALLATION.

3.2. SUBMIT PRODUCT DATA SHEETS FOR ALL IRRIGATION EQUIPMENT TO BE INSTALLED TO OWNER'S REPRESENTATIVE FOR APPROVAL PRIOR TO INSTALLATION. THE IRRIGATION SYSTEM, AS SHOWN ON THESE PLANS, HAS BEEN DESIGNED AND CALCULATED WITH THE EQUIPMENT AS SPECIFIED. SUBMIT ANY REQUEST FOR PRODUCT SUBSTITUTION(S) IN WRITING. IF APPROVED, THE CONTRACTOR SHALL BE RESPONSIBLE FOR ANY NECESSARY MODIFICATION(S) AS A RESULT OF PRODUCT SUBSTITUTIONS TO THE IRRIGATION SYSTEM IN THE SHOP DRAWINGS TO MEET THE DESIGN INTENT OF THESE PLANS.

4. EQUIPMENT LIST

4.1. ALL QUANTITIES ARE PROVIDED FOR CONVENIENCE ONLY. CONFIRM ALL QUANTITIES PER PLAN PRIOR TO BIDDING AND CONSTRUCTION.

5. POINT OF CONNECTION

5.1. FIELD VERIFY ALL POINT OF CONNECTION SOURCE INFORMATION INCLUDING STATIC PSI AND GPM AVAILABLE PRIOR TO CONSTRUCTION. NOTIFY OWNER'S REPRESENTATIVE IN WRITING IF DISCREPANCIES BETWEEN THE FLOW AND PRESSURE AS LISTED IN THE CRITICAL ANALYSIS AND THE FIELD CONDITIONS EXIST.

5.2. COORDINATE INSTALLATION OF ANY METERS AND BACKFLOW ASSEMBLIES WITH THE AGENCY HAVING JURISDICTION AND OWNER'S REPRESENTATIVE.

6. MAINLINE INSTALLATION

6.1. INSTALL ALL MAINLINES AND LATERALS UNDER PAVEMENT WITHIN SLEEVES. WHERE VALVE CONTROL LINES PASS THROUGH A SLEEVE WITH OTHER MAIN OR LATERAL LINES, CONTAIN WIRES WITHIN A SEPARATE, SMALLER CONDUIT.

6.2. INSTALL COLOR CODED METAL DETECTABLE MARKING TAPE WHICH CLEARLY NOTES: "CAUTION: IRRIGATION LINE BURIED BELOW" ABOVE THE FULL LENGTH OF THE IRRIGATION MAINLINE.

6.3. WHERE MAINLINE RUNS PARALLEL TO PAVEMENT OR CURBING, OFFSET THE MAINLINE 24" FROM THE EDGE OF PAVEMENT OR CURB.

6.4. PERFORM HYDROSTATIC PRESSURE TESTING AS FOLLOWS:

6.4.1. AFTER FLUSHING, AND THE INSTALLATION OF VALVES CONDUCT THE FOLLOWING TESTS IN THE SEQUENCE LISTED BELOW. FURNISH ALL EQUIPMENT, MATERIALS AND LABOR NECESSARY TO PERFORM THE TESTS. CONDUCT ALL TESTS IN THE PRESENCE OF THE OWNER'S REPRESENTATIVE. NOTIFY THE OWNER'S REPRESENTATIVE FORTY-EIGHT (48) HOURS IN ADVANCE OF TESTING.

6.4.2. PERFORM WATER PRESSURE TESTS ON ALL PRESSURE MAIN LINES BEFORE ANY COUPLINGS, FITTINGS, VALVES AND THE LIKE ARE CONCEALED.

6.4.3. IMMEDIATELY PRIOR TO TESTING, PURGE ALL IRRIGATION LINES OF ALL ENTRAPPED AIR OR DEBRIS BY ADJUSTING CONTROL VALVES AND INSTALLING TEMPORARY CAPS FORCING WATER AND DEBRIS TO BE DISCHARGED FROM A SINGLE OUTLET.

6.4.4. TEST ALL PRESSURE MAIN LINE AT 150 PSI FOR A MINIMUM OF FOUR (4) HOURS WITH AN ALLOWABLE LOSS OF 5 PSI. PRESSURE AND GAUGES SHALL BE READ IN PSI, AND CALIBRATED SUCH THAT ACCURATE DETERMINATION OF POTENTIAL PRESSURE LOSS CAN BE ASCERTAINED.

6.4.5. RE-TEST AS REQUIRED UNTIL THE SYSTEM MEETS THE REQUIREMENTS. REPAIR ANY LEAKS, WHICH OCCUR DURING TEST PERIOD, IMMEDIATELY FOLLOWING THE TEST.

6.4.6. PROVIDE DOCUMENTATION STATING THE WEATHER CONDITIONS, DATE, THE START TIME AND INITIAL WATER PRESSURE READINGS, THE FINISH TIME AND FINAL WATER PRESSURE READINGS AND THE TYPE OF EQUIPMENT USED TO PERFORM THE TEST. THE DOCUMENTATION MUST BE SIGNED BY A WITNESS ACCEPTABLE TO THE OWNER, VERIFYING ALL OF THE ABOVE-MENTIONED CONDITIONS.

6.4.7. SUBMIT A WRITTEN REPORT OF THE PRESSURE TESTING RESULTS WITH THE OTHER ABOVE REQUIRED INFORMATION TO THE OWNER'S REPRESENTATIVE FOR APPROVAL.

7. IRRIGATION VALVES AND WIRING

7.1. LOCATE ALL VALVES, SPLICES WITHIN CONTROL LINES, QUICK COUPLERS, AND HOSE BIBBS WITHIN VALVE BOXES. PROVIDE PURPLE VALVE BOX LIDS FOR SYSTEMS UTILIZING A NON-POTABLE WATER SOURCE.

7.2. NUMBER THE TOP OF ALL VALVE BOX LIDS WITH MINIMUM 1" HEIGHT BLACK LETTERS TO CORRESPOND TO THE VALVE DESIGNATIONS.

7.3. WHEN POSSIBLE, LOCATE ALL VALVES IN PLANTING BEDS A MINIMUM OF 24" FROM BACK OF CURB OR EDGE OF PAVEMENT, UNLESS OTHERWISE NOTED.

7.4. SEPARATE IRRIGATION ZONES FOR HIGH AND LOW WATER USE REQUIREMENTS AND OPERATED ON DIFFERENT WATERING CYCLES. AT NO TIME SHALL MULTIPLE IRRIGATION HEAD TYPES BE LOCATED ON THE SAME VALVE UNLESS NOTED OTHERWISE.

7.5. INSTALL ALL DRIP ZONES WITH A FLUSH VALVE AND AIR RELIEF VALVE. IN THE EVENT THAT A DRIP ZONE HAS MORE THAN ONE HIGH OR LOW POINT, MORE THAN ONE AIR RELIEF VALVE OR FLUSH VALVE WILL BE REQUIRED FOR THAT ZONE.

7.6. FOLLOW MANUFACTURER'S SPECIFICATIONS FOR ALL WIRING FOR CONNECTION OF THE VALVES TO THE CONTROLLER. ALL WIRE RUNS SHALL BE CONTINUOUS WITH SPLICING OCCURRING IN VALVE BOXES ONLY. WIRE CONNECTIONS SHALL BE MADE USING DBR/Y-6 CONNECTIONS OR APPROVED EQUAL.

7.7. INSTALL VALVE CONTROL WIRING IN THE SAME TRENCH AS THE MAINLINE WHERE PRACTICAL.

7.8. FOR NON TWO-WIRE SYSTEMS, RUN TWO (2) SPARE VALVE CONTROL WIRES FROM THE CONTROLLER ALONG THE ENTIRE MAINLINE TO LAST REMOTE CONTROLLED VALVE ON EACH AND EVERY LEG OF MAINLINE.

8. PIPES AND SLEEVING

8.1. DO NOT INSTALL IRRIGATION SYSTEM THROUGH PRESERVED PLANT COMMUNITIES, DRIPLINE OF EXISTING TREES, OR WITHIN WETLANDS UNLESS SPECIFICALLY NOTED OTHERWISE.

8.2. LOCATE ALL IRRIGATION LINES WITHIN LANDSCAPED AREAS WHENEVER POSSIBLE. ALL LINES UNDER PAVEMENT MUST BE SLEEVED.

8.3. SIZE ALL PIPE SLEEVES TWO PIPE SIZES GREATER THAN THE PIPE / CUMULATIVE SUM OF THE PIPES IT CARRIES.

8.4. SLEEVES UNDER EXISTING PAVEMENT MUST BE DIRECTIONAL BORE UNLESS APPROVED BY OWNER IN WRITING.

8.5. SOLVENT CEMENTS SHALL COMPLY WITH ASTM D2564.

9. CONTROLLER AND SENSORS

9.1. COORDINATE WITH OWNER'S REPRESENTATIVE FOR FINAL CONTROLLER AND RAIN SENSOR LOCATIONS. THE CONTROLLER SHALL BE PLACED IN A LOCKING CABINET APPROPRIATE FOR ITS LOCATION. (INDOOR VS. OUTDOOR USE)

9.2. LOCATE THE AUTOMATIC RAIN SENSOR SHUTOFF DEVICE IN AN AREA THAT IS UNOBSTRUCTED BY TREES, ROOF OVERHANGS, OR ANY OTHER OVERHEAD OBJECT. THE SENSOR SHALL NOT BE PLACED WITHIN THE SPRAY ZONE OF ANY SPRINKLER HEAD, INCLUDING OFF-SITE IRRIGATION. CONTRACTOR SHALL LOCATE SENSOR WITHIN CLOSE PROXIMITY TO THE IRRIGATION CONTROLLER.

10. CLEANUP

10.1. UPON COMPLETION OF ALL WORK AND BEFORE FINAL ACCEPTANCE, REMOVE ALL MATERIAL, EQUIPMENT, AND DEBRIS RESULTING FROM HIS WORK. ALL PAVED AREAS SHALL BE CLEANED AND THE SITE LEFT IN A NEAT AND ACCEPTABLE CONDITION AS APPROVED BY THE OWNER'S REPRESENTATIVE.

11. AS-BUILT IRRIGATION PLANS

11.1. PROVIDE "AS-BUILT" DRAWINGS OF THE FINAL INSTALLATION TO OWNER'S REPRESENTATIVE PRIOR TO FINAL ACCEPTANCE OF WORK. INCLUDE THE FOLLOWING ON THE AS-BUILT DRAWINGS AT A MINIMUM:
- CONTROLLER LOCATION
- CONNECTION ASSEMBLY
- MAINLINE ROUTING
- PIPE SLEEVING
- VALVE(S)
- COLORIZED ZONING DIAGRAM

11.2. LOCATE ALL SLEEVES UTILIZED BY THE IRRIGATION CONTRACTOR WHETHER INSTALLED BY THE IRRIGATION CONTRACTOR OR NOT ON THE "AS-BUILT" DRAWINGS. THE DEPTH BELOW FINISH GRADE, TO THE NEAREST FOOT OF EACH END OF THE SLEEVE SHALL BE NOTED AT EACH SLEEVE LOCATION ON THE "AS-BUILT" DRAWINGS.

12. FINAL INSPECTION AND ACCEPTANCE OF WORK

12.1. MINIMIZE IRRIGATION OVERTHROW TO IMPERVIOUS AND NATURAL AREAS THROUGH FIELD ADJUSTMENTS TO INDIVIDUAL HEADS.

12.2. PROGRAM CONTROLLER TO IRRIGATE ALL ZONES WITHIN APPLICABLE WATERING WINDOWS AND PROVIDE WATERING SCHEDULE TO OWNER'S REPRESENTATIVE.

12.3. EQUIPMENT TO BE FURNISHED TO OWNER PRIOR TO ACCEPTANCE OF WORK:

- TWO (2) SETS OF KEYS FOR EACH AUTOMATIC CONTROLLER.
- TWO (2) 48 INCH TEE WRENCHES FOR OPERATING GATE VALVES (WHEN INSTALLED AS PART OF WORK).
- THREE (3) SETS OF SPECIAL TOOLS REQUIRED FOR REMOVING, DISASSEMBLING AND ADJUSTING EACH TYPE OF - SPRINKLER AND VALVE SUPPLIED ON THIS PROJECT.
- FIVE (5) EXTRA SPRINKLER HEADS, NOZZLES, SHRUB ADAPTERS, NOZZLE FILTER SCREENS, FOR EACH TYPE USED ON THE PROJECT.
- TWO (2) QUICK COUPLER KEYS TO MATCH MANUFACTURER TYPE OF QUICK COUPLER.

12.4. UPON COMPLETION OF ALL WORK, A FINAL INSPECTION SHALL BE PERFORMED BY THE OWNER AND/OR OWNER'S REPRESENTATIVE. THE IRRIGATION SYSTEM, CONSTRUCTION AND ALL OTHER INCIDENTAL WORK PERTAINING TO THIS CONTRACT SHALL BE INSPECTED FOR COMPLIANCE WITH THE CONTRACT DOCUMENTS. ANY ITEMS FOUND TO NOT BE IN COMPLIANCE SHALL BE CORRECTED AT NO COST TO THE OWNER.

13. WARRANTY

13.1. THE CONTRACTOR SHALL WARRANTEE ALL WORKMANSHIP AND MATERIALS FOR A PERIOD OF 1 YEAR FOLLOWING THE ACCEPTANCE OF THE WORK.

13.2. ANY PART OF THE IRRIGATION WORK THAT FAILS OR IS DEFECTIVE SHALL BE REPLACED OR RECONSTRUCTED AT NO COST TO THE OWNER INCLUDING BUT NOT LIMITED TO: RESTORING GRADES THAT HAVE SETTLED IN TRENCHES AND EXCAVATIONS RELATED TO THE WORK. RECONSTRUCTION SHALL INCLUDE ANY PLANTINGS, SOIL, MULCH OR OTHER PARTS OF THE CONSTRUCTED LANDSCAPE THAT MAY BE DAMAGED DURING THE REPAIR OR THAT RESULTS FROM SOIL SETTLEMENT.

13.3. THE DATE OF ACCEPTANCE OF THE WORK AND START OF THE GUARANTEE PERIOD SHALL BE DETERMINED BY THE OWNER, UPON THE FINDING THAT THE ENTIRE IRRIGATION SYSTEM IS INSTALLED AS DESIGNED AND SPECIFIED, AND FOUND TO BE OPERATING CORRECTLY, SUPPLYING WATER EVENLY TO ALL PLANTING AND/OR LAWN AREAS.

13.4. NEITHER THE FINAL ACCEPTANCE NOR ANY PROVISION IN THE CONTRACT DOCUMENTS SHALL RELIEVE THE CONTRACTOR OF RESPONSIBILITY FOR FAULTY MATERIALS OR WORKMANSHIP. REMEDY ANY DEFECTS WITHIN A PERIOD OF 7 DAYS (S) FROM THE DATE OF NOTIFICATION OF A DEFECT.

14. ABBREVIATIONS

GPM - GALLONS PER MINUTE
GPH - GALLONS PER HOUR
PSI - POUNDS PER SQUARE INCH

LATERAL PIPE SIZING REQUIREMENTS

MAXIMUM FLOW	MINIMUM PIPE SIZE
10 GPM	3/4"
16 GPM	1"
26 GPM	1-1/4"
35 GPM	1-1/2"
55 GPM	2"
80 GPM	2-1/2"
120 GPM	3"

PIPE SIZES ILLUSTRATED IN THE ABOVE CHART ARE MINIMUM ACCEPTABLE SIZES. PIPE SIZES INDICATED ON PLAN ARE FOR CONVENIENCE ONLY. FIELD SIZE ALL LATERAL PIPING TO KEEP ALL FRICTION LOSS VELOCITIES BELOW 5.0 FPS.

GROUNDWATER / DEWATERING NOTE:
THE PRESENCE OF GROUNDWATER SHOULD BE ANTICIPATED ON THIS PROJECT. CONTRACTOR'S BID SHALL INCLUDE CONSIDERATION FOR THIS ISSUE. WHEN PERFORMING GRADING OPERATIONS DURING PERIODS OF WET WEATHER, PROVIDE ADEQUATE DEWATERING, DRAINAGE AND GROUND WATER MANAGEMENT TO CONTROL MOISTURE OF SOILS.

811 KNOW WHAT'S BELOW ALWAYS CALL 811 BEFORE YOU DIG
It's fast. It's free. It's the law.
www.callsunshine.com

No.	Revisions	Date	By
1	BID ADDENDUM #5	4/16/2026	JLD

Kimley»Horn
© 2026 KIMLEY-HORN AND ASSOCIATES, INC.
200 CENTRAL AVENUE, SUITE 600
ST. PETERSBURG, FL 33701
P: 727 547 3999
WWW.KIMLEY-HORN.COM REGISTRY NO. 35106

DESIGN ENGINEER:
JENNIFER L. DAOULAS
FL LICENSE NUMBER
66673369
DATE:

SCALE: AS NOTED
DESIGN: KH
DRAWN: KH
CHECKED: JLD

IRRIGATION NOTES

CITY OF ST. PETE BEACH
LIFT STATION 07
REHABILITATION
PID# PS26-401-608-00
PINELLAS COUNY FLORIDA

DATE:
APRIL 2026

PROJECT NO.
148404108

SHEET NUMBER
IR-02

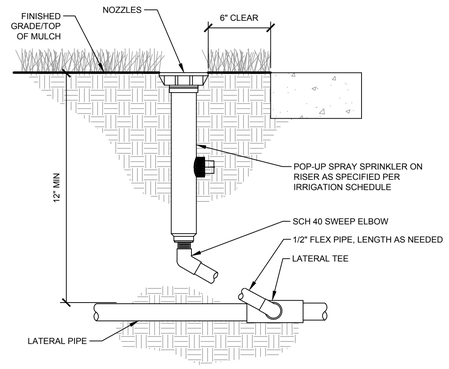

1 TYPICAL SPRAY/ROTARY HEAD

NTS P-LI-04

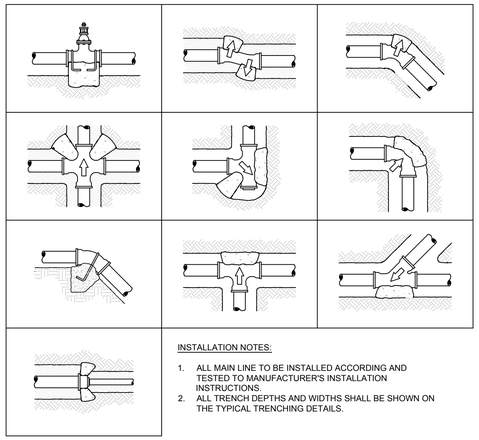

INSTALLATION NOTES:

1. ALL MAIN LINE TO BE INSTALLED ACCORDING AND TESTED TO MANUFACTURER'S INSTALLATION INSTRUCTIONS.
2. ALL TRENCH DEPTHS AND WIDTHS SHALL BE SHOWN ON THE TYPICAL TRENCHING DETAILS.

2 TYPICAL THRUST BLOCK

SECTION NTS

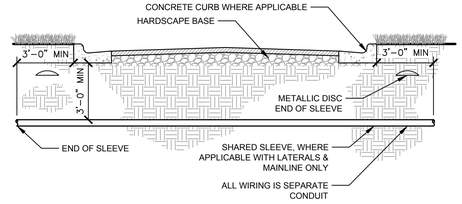

3 TYPICAL SLEEVING

1/4" = 1'-0" P-LI-08

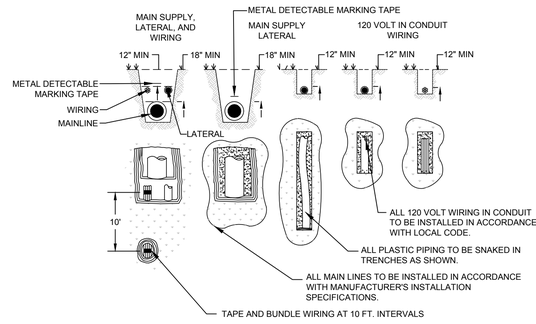

4 TYPICAL TRENCHING

1" = 1" P-LI-10

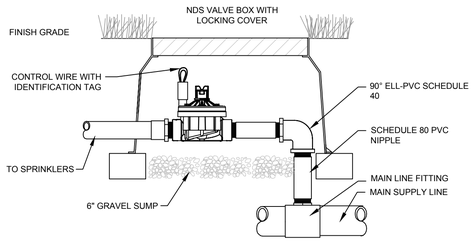

LINE BOTTOM OF VALVE PIT WITH LANDSCAPE FABRIC. MAINTAIN CLEAR SPACE BETWEEN BOTTOM OF VALVE PIT AND VALVE. DO NOT ALLOW BOX TO REST ON PIPE.

5 TYPICAL CONTROL VALVE

1" = 1" P-LI-12

GROUNDWATER / DEWATERING NOTE:
THE PRESENCE OF GROUNDWATER SHOULD BE ANTICIPATED ON THIS PROJECT. CONTRACTOR'S BID SHALL INCLUDE CONSIDERATION FOR THIS ISSUE. WHEN PERFORMING GRADING OPERATIONS DURING PERIODS OF WET WEATHER, PROVIDE ADEQUATE DEWATERING, DRAINAGE AND GROUND WATER MANAGEMENT TO CONTROL MOISTURE OF SOILS.

811 KNOW WHAT'S BELOW ALWAYS CALL 811 BEFORE YOU DIG It's fast. It's free. It's the law. www.callsunshine.com

No.	Revisions	Date	By
1	BID ADDENDUM #5	4/16/2026	JLD

Kimley»Horn

© 2026 KIMLEY-HORN AND ASSOCIATES, INC.
200 CENTRAL AVENUE, SUITE 600
ST. PETERSBURG, FL 33701
P. 727 547 3999
WWW.KIMLEY-HORN.COM REGISTRY NO. 35106

DESIGN ENGINEER: JENNIFER L. DAOULAS
FL LICENSE NUMBER 6667369
DATE:

SCALE: AS NOTED
DESIGN: KH
DRAWN: KH
CHECKED: JLD

IRRIGATION DETAILS

CITY OF ST. PETE BEACH
LIFT STATION 07
REHABILITATION
PID# PS26-401-608-00
PINELLAS COUNY FLORIDA

DATE: APRIL 2026
PROJECT NO. 148404108
SHEET NUMBER IR-03

4. Modified Electrical Sheets (behind this page)

ELECTRICAL SYMBOLS

- LT — LEVEL TRANSMITTER
- M — ELECTRIC METER
- DISCONNECT SWITCH
- FUSED DISCONNECT SWITCH
- CIRCUIT BREAKER
- OVERLOAD RELAY
- # — MOTOR (NUMBER INDICATES HP)
- FLOAT SWITCH
- POLE–MOUNTED LIGHT FIXTURE
- $ — SINGLE POLE, SINGLE THROW SWITCH
- 3 POSITION SELECTOR SWITCH (X INDICATES CLOSED POSITION)
- NORMALLY OPEN PUSH BUTTON
- NORMALLY OPEN CONTACT
- NORMALLY CLOSED CONTACT
- M — MOTOR STARTER COIL
- CR — CONTROL RELAY
- MOTOR THERMAL SWITCH
- LIMIT SWITCH
- FLOAT SWITCH
- CURRENT TRANSFORMER
- FUSE

- SELECTOR SWITCH
- G — PILOT LIGHT LENS
  COLOR IS INDICATED BY LETTER INSIDE
  - A – AMBER
  - B – BLUE
  - G – GREEN
  - R – RED
  - W – WHITE
- B — PUSHBUTTON
  COLOR IS INDICATED BY LETTER INSIDE
  - B – BLUE
  - G – GREEN
  - R – RED
  - BLANK – BLACK
- ENGRAVED NAMEPLATE
- CONTROL PANEL TERMINAL
- SCADA PANEL TERMINAL
- GROUND
- WIRING IN CONDUIT (PLAN) / CONTROL PANEL WIRING
- HOME RUN TO PANEL (PLAN)
- FIELD WIRING (CONTROL PANEL)
- G — GROUND RING
- GROUND TEST WELL

ELECTRICAL ABBREVIATIONS

A	AMPERE
AFF	ABOVE FINISHED FLOOR
AG	ABOVE GROUND
AL	ALUMINUM
ATL	ACROSS THE LINE STARTER
ATS	AUTOMATIC TRANSFER SWITCH
AWG	AMERICAN WIRE GAUGE
BRK	BREAKER
CAT	CATALOG
CR	CONTROL RELAY
CIRC.	MIL CIRCULAR MILS (AWG)
C.O.	CONDUIT ONLY
CKT	CIRCUIT
CP	CONTROL PANEL
DF	DEMAND FACTOR
DIA	DIAMETER
DS	DOOR SWITCH
DWG	DRAWING
EA	EACH
ELECT	ELECTRICAL
ELEV	ELEVATION
ETM	ELAPSED TIME METER
EXIST	EXISTING
FLA	FULL LOAD AMPS
FUT	FUTURE
FVNR	FULL VOLTAGE, NON–REVERSING
GFCI	GROUND FAULT CIRCUIT INTERRUPTER
GND	GROUND
HP	HORSE POWER
HZ	HERTZ (CYCLES PER SECOND)
IC	INTERRUPTING CAPACITY
ID	INTERNAL DIAMETER
KV	KILOVOLTS
KVA	KILOVOLT–AMPERES
LCL	LONG CONTINUOUS LOAD
LED	LIGHT EMITTING DIODE
LTG	LIGHTING
LS	LEVEL SWITCH
MAX	MAXIMUM
MCC	MOTOR CONTROL CENTER
MCP	MAIN CONTROL PANEL
MCM	THOUSAND CIRCULAR MIL (AWG)
MFR	MANUFACTURER
MIN	MINIMUM
MIS	MISCELLANEOUS
MOV	MOTOR OPERATED VALVE
MPZ	MINI POWER ZONE
MTG	MOUNTING
MTS	MANUAL TRANSFER SWITCH
N.C.	NORMALLY CLOSED
NEC	NATIONAL ELECTRICAL CODE
N.O.	NORMALLY OPEN
NO.	NUMBER
O.L.	OVERLOAD
P	POLE
PH	PHASE
PLC	PROGRAMMABLE LOGIC CONTROLLER
PNL	PANEL
PQM	POWER QUALITY METER
PR	PAIR
PVC	POLYVINYL CHLORIDE
REC	RECEPTACLE
RGS	RIGID GALVANIZED STEEL
RTU	REMOTE TERMINAL UNIT
RVSS	REDUCED VOLTAGE SOFT STARTER
SCE	SOUTHERN CALIFORNIA EDISON
SCHED	SCHEDULE
SES	SERVICE ENTRANCE SECTION
SF	SEAL FAIL
SHLD	SHIELDED
SPD	SURGE PROTECTION DEVICE
SPECS	SPECIFICATIONS
SS	SOFT STARTER
SSS	SOLID STATE STARTER
TEL	TELEPHONE
TDR	TIME DELAY RELAY
TRX	TRANSITION
TSH	TEMPERATURE SWITCH
TSP	TWISTED SHIELDED PAIR
TTB	TELEPHONE TERMINAL BACKBOARD
TYP	TYPICAL
UPS	UNINTERRUPTIBLE POWER SUPPLY
US	ULTRASONIC SENSOR
UG	UNDER GROUND
UCP	UNIT CONTROL PANEL
V	VOLTS
VFD	VARIABLE FREQUENCY DRIVE
WP	WEATHERPROOF
XFMR	TRANSFORMER

GENERAL ELECTRICAL NOTES

1. THE COMPLETED INSTALLATION SHALL CONFORM TO ALL APPLICABLE FEDERAL, STATE AND LOCAL CODE ORDINANCES AND REGULATIONS. CONTRACTOR SHALL OBTAIN NECESSARY PERMITS AND INSPECTIONS REQUIRED BY THE AUTHORITIES HAVING JURISDICTION. ALL WORK SHALL BE DONE IN A NEAT, WORKMANLIKE, FINISHED AND SAFE MANNER, ACCORDING TO THE LATEST PUBLISHED N.E.C.A. STANDARDS OF INSTALLATION, UNDER COMPETENT SUPERVISION. INSTALL GROUNDING AS REQUIRED BY THE CODE(S).
2. VISIT THE SITE PRIOR TO BIDDING TO BECOME FAMILIAR WITH EXISTING CONDITIONS AND ALL OTHER FACTORS WHICH MAY AFFECT THE EXECUTION OF THIS WORK. INCLUDE ALL RELATED COSTS IN THE INITIAL BID PROPOSAL.
3. ALL MATERIALS SHALL BE NEW AND OF THE BEST QUALITY, MANUFACTURED IN ACCORDANCE WITH NEMA, ANSI, U.L. OR OTHER APPLICABLE STANDARDS. THE USE OF MANUFACTURER'S NAMES, MODELS, AND NUMBERS IS INTENDED TO ESTABLISH STYLE, QUALITY, APPEARANCE, USEFULNESS AND BID PRICE. PROPOSED SUBSTITUTIONS SHALL BE SUBMITTED IN WRITING AND REVIEWED BY THE ENGINEER BEFORE ORDERING.
4. PROTECT ALL ELECTRICAL MATERIAL AND EQUIPMENT INSTALLED AGAINST DAMAGE BY OTHER TRADES, WEATHER CONDITIONS OR ANY OTHER CAUSES. EQUIPMENT FOUND DAMAGED OR IN OTHER THAN NEW CONDITION WILL BE REJECTED AS DEFECTIVE.
5. LEAVE THE SITE CLEAN, REMOVE ALL DEBRIS, EMPTY CARTONS, TOOLS, CONDUIT, WIRE SCRAPS AND ALL MISCELLANEOUS SPARE EQUIPMENT AND MATERIALS USED IN THE WORK DURING CONSTRUCTION. ALL COMPONENTS SHALL BE FREE OF DUST, GRIT AND FOREIGN MATERIALS, LEFT AS NEW BEFORE FINAL ACCEPTANCE OF WORK.
6. ALL NEW EQUIPMENT AND WIRING IS SHOWN FULL TONE. EXISTING EQUIPMENT IS SHOWN IN HALF TONE.
7. CONTRACTOR SHALL FURNISH AND INSTALL A SEPARATE INSULATED GROUND CONDUCTOR IN ALL CONDUITS. ALL GROUND CONDUCTORS SHALL BE #12 AWG UNLESS NOTED OTHERWISE ON THE DRAWINGS.
8. CONTRACTOR SHALL COORDINATE THE EXACT LOCATION OF ALL UNDERGROUND CONDUITS AND DUCT BANKS TO AVOID INTERFERENCES WITH UNDERGROUND PIPING AND UTILITIES.
9. ALL CONDUIT, HANDHOLES, MANHOLES AND OTHER COMPONENTS IN THE BURIED ELECTRICAL SYSTEM SHALL BE LISTED FOR DIRECT BURIAL.
10. ALL CONDUIT PENETRATIONS THROUGH CONCRETE STRUCTURES SHALL BE INSTALLED THROUGH SLEEVED PENETRATIONS WITH MODULAR SEALS.
11. CONTRACTOR SHALL PROVIDE AND INSTALL 1250LB PULL TAPE IN ALL EMPTY CONDUITS.
12. ALL SAFETY SWITCHES AND OTHER DISTRIBUTION AND CONTROL ELECTRICAL EQUIPMENT SHALL BE U.L. LISTED AND RATED FOR HEAVY DUTY SERVICE.
13. ALL FASTENERS AND MOUNTING HARDWARE USED FOR THE INSTALLATION OF ELECTRICAL ITEMS SHALL BE 316 STAINLESS STEEL.
14. ALL ELECTRICAL EQUIPMENT, CONDUIT, WIRING, BOXES, ETC. SHALL BE SUBMITTED TO THE ENGINEER FOR REVIEW PRIOR TO ORDERING. THE SUBMITTALS SHALL BE NEATLY GROUPED AND ORGANIZED. PERTINENT INFORMATION SHALL BE HIGHLIGHTED, AND THE SPECIFIC PRODUCT SHALL BE IDENTIFIED. ALL SUBMITTALS SHALL BE COMPLETE, AND PRESENTED IN ONE PACKAGE. THE SUBMITTAL SHALL INCLUDE A COMPLETE LIST OF THE EQUIPMENT AND MATERIALS, INCLUDING THE MANUFACTURER'S NAME, PRODUCT SPECIFICATION, DESCRIPTIVE DATA, TECHNICAL LITERATURE, PERFORMANCE CHARTS, CATALOG CUTS, INSTALLATION INSTRUCTIONS, AND SPARE PART RECOMMENDATIONS FOR EACH DIFFERENT ITEM OF THE EQUIPMENT SPECIFIED.
15. IT IS THE RESPONSIBILITY OF THE CONTRACTOR TO ORGANIZE THEIR WORK, SO THAT A COMPLETE ELECTRICAL, INSTRUMENTATION, AND CONTROL SYSTEM FOR THE FACILITY WILL BE PROVIDED, AND WILL BE SUPPORTED BY ACCURATE SHOP AND RECORD DRAWINGS, AND O & M MANUALS.

No.	Revisions	Date	By

Kimley»Horn
© 2025 KIMLEY-HORN AND ASSOCIATES, INC.
200 CENTRAL AVENUE, SUITE 600
ST. PETERSBURG, FL 33701
P. 727 547 3999
WWW.KIMLEY-HORN.COM REGISTRY NO. 35106

DESIGN ENGINEER: JASON A. HOYT, P.E.
FL LICENSE NUMBER 101453
DATE:

SCALE: AS NOTED
DESIGN: JAH
DRAWN: EBW
CHECKED: JAH

ELECTRICAL LEGEND

CITY OF ST. PETE BEACH
PUMP & LIFT STATION REHABILITATIONS
PID# PS26-401-608-00
PINELLAS COUNY FLORIDA

DATE:
APRIL 2026

PROJECT NO.
148404108

SHEET NUMBER
E-01

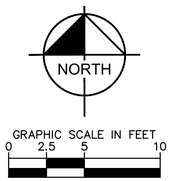

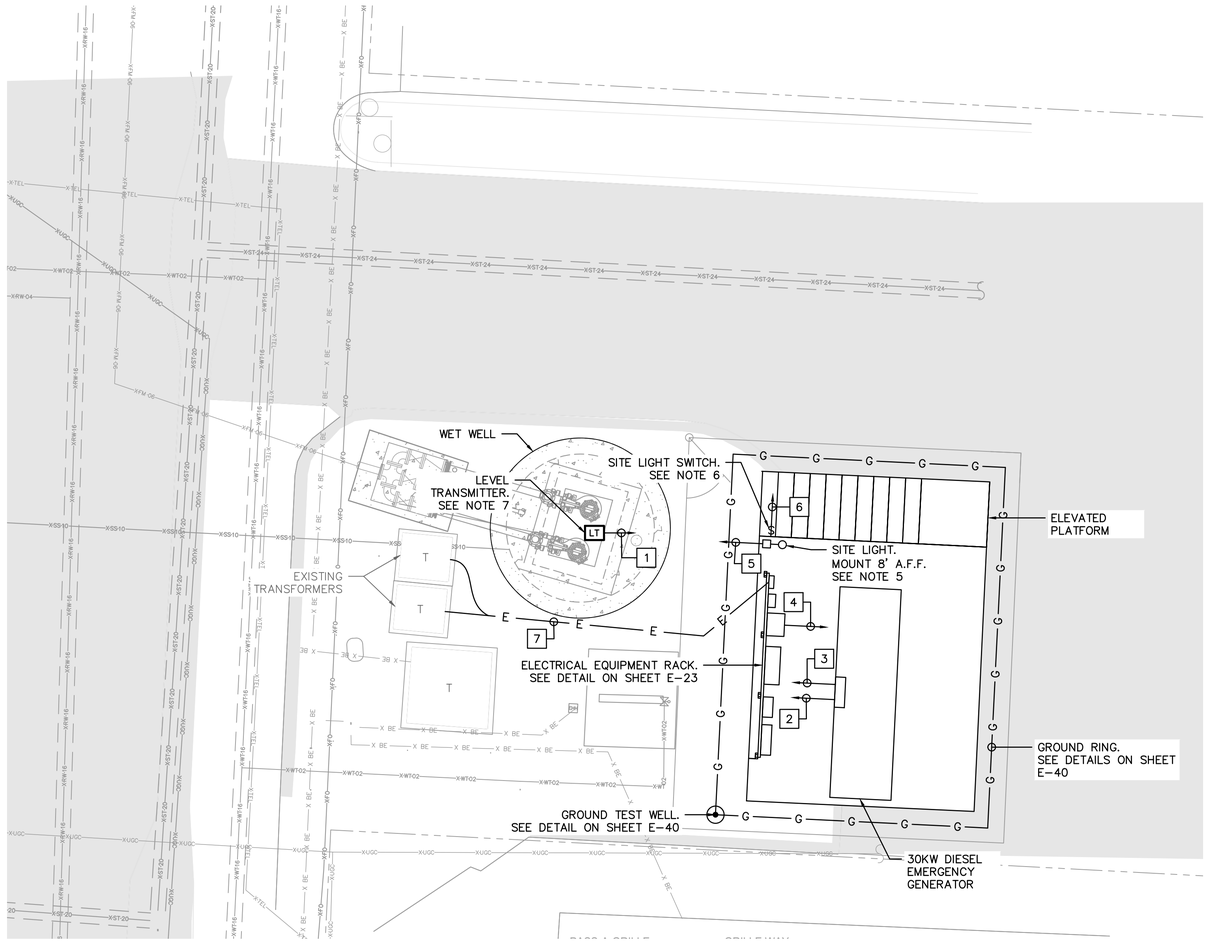

A ELECTRICAL SITE PLAN
SCALE: 1" = 5'

GENERAL NOTES:

1. COORDINATE RELOCATION OF ELECTRIC SERVICE WITH DUKE ENERGY.
2. REUSE EXISTING CONDUIT TO THE FULLEST EXTENT POSSIBLE.
3. CONDUITS SHOWN ARE REPRESENTATIVE ONLY. CONTRACTOR SHALL DETERMINE CONDUIT LOCATION AND ROUTING.
4. SEE ONE-LINE DIAGRAM ON SHEET E-03 FOR ADDITIONAL CONDUIT AND WIRING.
5. POLE-MOUNTED FIXTURE, LITHONIA #DSXF1 LED P2 40K WFL MVOLT IS DDBXD. CONTRACTOR TO FIELD ADJUST ORIENTATION AS REQUIRED.
6. WEATHERPROOF 20A-1P SITE LIGHT SWITCH. MOUNT TO THE ELEVATED PLATFORM COLUMN, 48" ABOVE THE STEP.
7. REPLACE EXISTING SUBMERSIBLE LEVEL TRANSMITTER WITH A RADAR LEVEL TRANSMITTER. SEE INSTALLATION DETAIL ON SHEET E-41.

KEY NOTES:

1. LEVEL TRANSMITTER CABLE IN EXISTING 1-1/4" CONDUIT TO SCADA PANEL ON ELECTRICAL EQUIPMENT RACK
2. 2#12 AND #12 GND. IN 3/4" CONDUIT TO PUMP CONTROL PANEL ON ELECTRICAL EQUIPMENT RACK
3. 8#14 IN AND (1) ETHERNET CABLE 1" CONDUIT TO SCADA PANEL ON ELECTRICAL EQUIPMENT RACK
4. 4#14 AND (1) ETHERNET CABLE IN 1" CONDUIT TO SCADA PANEL ON ELECTRICAL EQUIPMENT RACK
5. 2#12 AND #12 GND. IN 1" CONDUIT TO PUMP CONTROL PANEL ON ELECTRICAL EQUIPMENT RACK
6. 2#12 AND #12 GND. IN 1" CONDUIT TO SITE LIGHT
7. 4#1 IN 1-1/2" CONDUIT TO EXISTING PAD-MOUNTED TRANSFORMER

No.	Revisions	Date	By

Kimley»Horn
© 2025 KIMLEY-HORN AND ASSOCIATES, INC.
200 CENTRAL AVENUE, SUITE 600
ST. PETERSBURG, FL 33701
P. 727 547 3999
WWW.KIMLEY-HORN.COM REGISTRY NO. 35106

DESIGN ENGINEER: JASON A. HOYT, P.E.
FL LICENSE NUMBER 101453
DATE:

SCALE:	AS NOTED		
DESIGN:	JAH	DRAWN:	EBW
CHECKED:	JAH		

LIFT STATION 4 REHABILITATION
ELECTRICAL SITE PLAN

CITY OF ST. PETE BEACH
PUMP & LIFT STATION
REHABILITATIONS
PID# PS26-401-608-00
PINELLAS COUNY FLORIDA

DATE:
APRIL 2026

PROJECT NO.
148404108

SHEET NUMBER
E-02

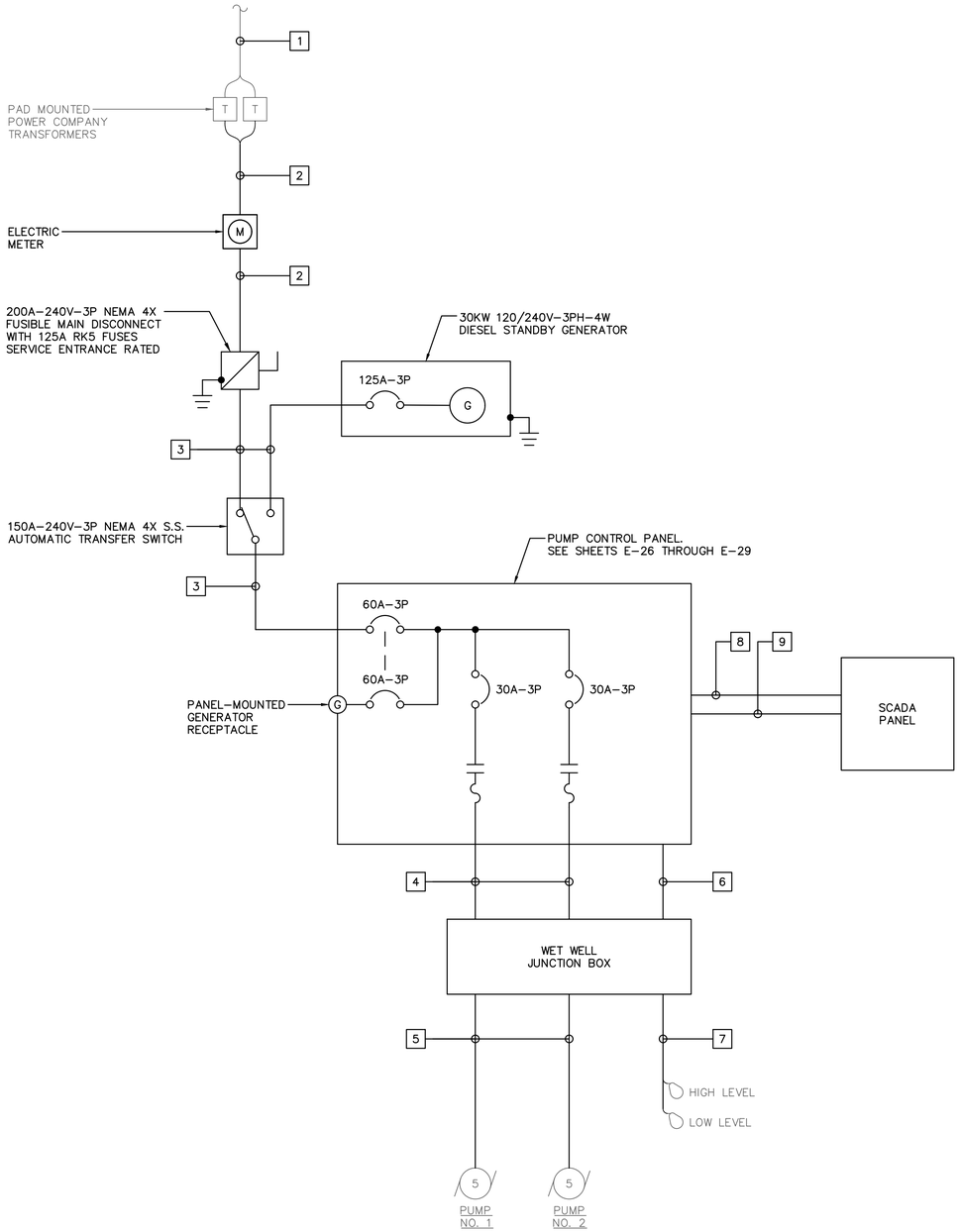

A ELECTRICAL ONE-LINE DIAGRAM

SCALE: NO SCALE

GENERAL NOTES:

1. COORDINATE RELOCATION OF ELECTRIC SERVICE WITH DUKE ENERGY.
2. REUSE EXISTING CONDUIT TO THE FULLEST EXTENT POSSIBLE.
3. CONDUITS SHOWN ARE REPRESENTATIVE ONLY. CONTRACTOR SHALL DETERMINE CONDUIT LOCATION AND ROUTING.
4. COORDINATE FLOAT LEVEL SWITCH ELEVATIONS WITH THE CITY.
5. EXISTING FLOATS NOT USED SHALL BE SECURED ABOVE THE HIGH LEVEL FLOAT FOR USE AS SPARES.

KEY NOTES:

1. PRIMARY UNDERGROUND ELECTRIC SERVICE
2. 4#1 IN 1–1/2" CONDUIT
3. 4#1 AND #6 GND. IN 2" CONDUIT
4. 3#10, 4#14, AND #10 GND. IN 2" CONDUIT
5. SUBMERSIBLE PUMP CABLES IN 2" CONDUIT
6. 8#14 IN 2" CONDUIT
7. FLOAT SWITCH CABLES IN 2" CONDUIT
8. SPARE 2" CONDUIT
9. 32#14, #14 GND., AND (2) 1 PR. #16 SHLD. IN 2"C

1

ELECTRICAL LOAD CALCULATION

LOAD DESCRIPTION	HP	CONN. LOAD (KVA)	DEMAND FACTOR (DF)	DEMAND LOAD (KVA)
SEWAGE PUMP NO. 1 (LARGEST MOTOR)	5	6.32	1.25	7.90
SEWAGE PUMP NO. 2	5	6.32	1.00	6.32
AUXILIARY EQUIPMENT		3.00	1.00	3.00
TOTAL:		15.64		17.22

ELECTRICAL LOAD SUMMARY

SERVICE VOLTAGE:	240	V
PHASE:	3	
CONNECTED LOAD:	15.64	KVA
	37.62	A
DEMAND LOAD:	17.22	KVA
	41.42	A
LOAD MULTIPLIER:	1.25	
MINIMUM SERVICE:	21.52	KVA
	51.77	A
SEVICE ENTRANCE TRIP RATING:	125	A
MINIMUM SHORT CIRCUIT CURRENT RATING:	22	KAIC

B ELECTRICAL LOAD CALCULATIONS

SCALE: NO SCALE

No.	Revisions	Date	By
1	BID ADDENDUM #5	4/16/2026	JAH

Kimley»Horn

© 2025 KIMLEY-HORN AND ASSOCIATES, INC.

200 CENTRAL AVENUE, SUITE 600
ST. PETERSBURG, FL 33701
P. 727 547 3999
WWW.KIMLEY-HORN.COM REGISTRY NO. 35106

DESIGN ENGINEER:
JASON A. HOYT, P.E.
FL LICENSE NUMBER
101453
DATE:

SCALE: AS NOTED
DESIGN: JAH
DRAWN: EBW
CHECKED: JAH

LIFT STATION 4 REHABILITATION
ELECTRICAL ONE-LINE DIAGRAM

CITY OF ST. PETE BEACH
PUMP & LIFT STATION
REHABILITATIONS
PID# PS26-401-608-00
PINELLAS COUNY FLORIDA

DATE:
APRIL 2026

PROJECT NO.
148404108

SHEET NUMBER
E-03

NORTH

GRAPHIC SCALE IN FEET
0 2.5 5 10

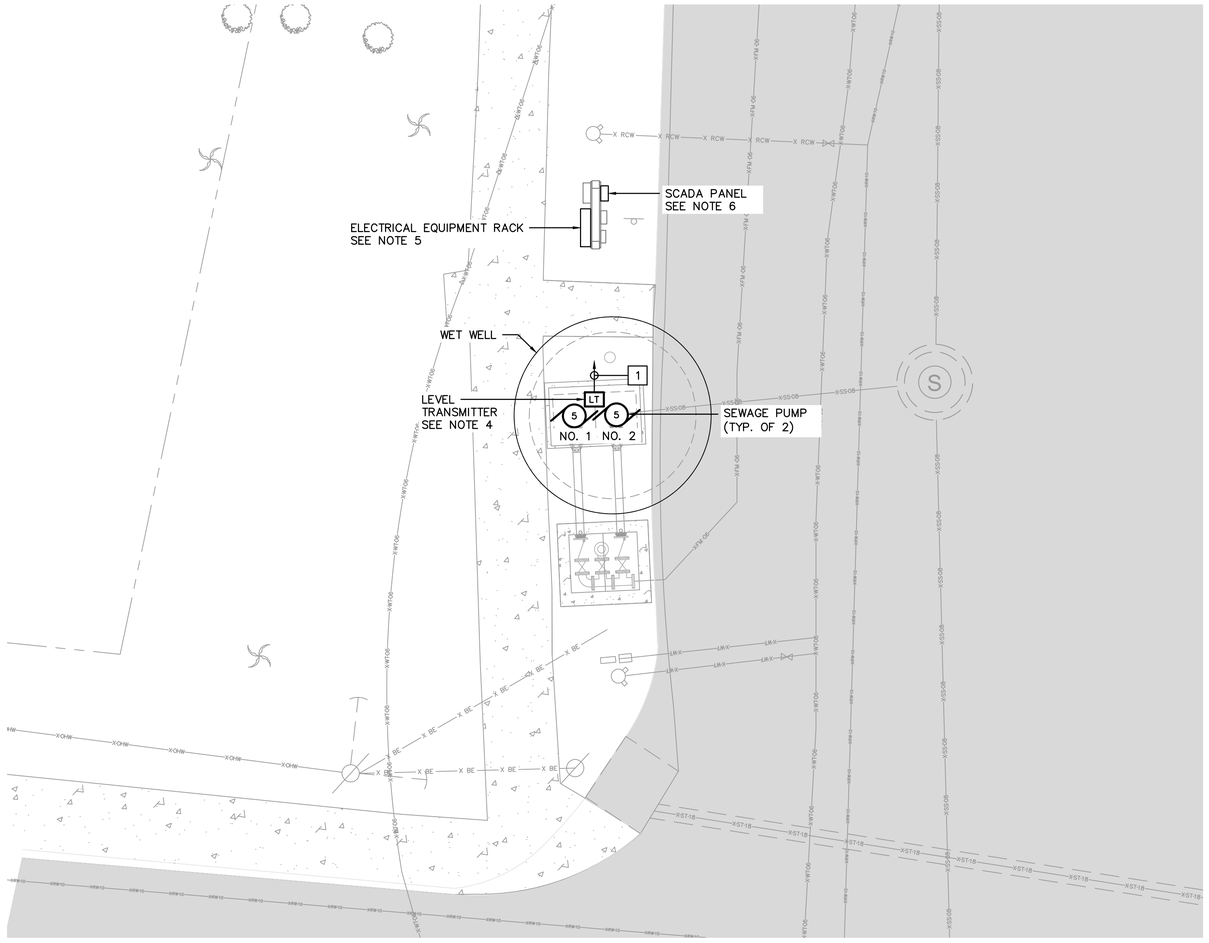

A ELECTRICAL SITE PLAN
SCALE: 1" = 5'

GENERAL NOTES:

1. REUSE EXISTING CONDUIT TO THE FULLEST EXTENT POSSIBLE.
2. CONDUITS SHOWN ARE REPRESENTATIVE ONLY. CONTRACTOR SHALL DETERMINE CONDUIT LOCATION AND ROUTING.
3. SEE ONE-LINE DIAGRAM ON SHEET E-05 FOR ADDITIONAL CONDUIT AND WIRING.
4. REPLACE EXISTING SUBMERSIBLE LEVEL TRANSMITTER WITH A RADAR LEVEL TRANSMITTER. SEE INSTALLATION DETAIL ON SHEET E-41.
5. REPLACE ATL PUMP CONTROL PANEL ON ELECTRICAL EQUIPMENT RACK. SEE EQUIPMENT RACK ELEVATION ON SHEET E-22 AND ATL PUMP CONTROL PANEL ON SHEETS E-26 THROUGH E-29.
6. CITY PROVIDED AND INSTALLED SCADA PANEL AND ANTENNA. COORDINATE REPLACEMENT WITH THE CITY.

KEY NOTES:

[1] LEVEL TRANSMITTER CABLE IN EXISTING 1-1/4" CONDUIT TO SCADA PANEL ON ELECTRICAL EQUIPMENT RACK.

No.	Revisions	Date	By

Kimley»Horn

© 2025 KIMLEY-HORN AND ASSOCIATES, INC.
200 CENTRAL AVENUE, SUITE 600
ST. PETERSBURG, FL 33701
P. 727 547 3999
WWW.KIMLEY-HORN.COM REGISTRY NO. 35106

DESIGN ENGINEER:
JASON A. HOYT, P.E.
FL LICENSE NUMBER
101453
DATE:

SCALE: AS NOTED
DESIGN: JAH
DRAWN: EBW
CHECKED: JAH

LIFT STATION 5 REHABILITATION
ELECTRICAL SITE PLAN

CITY OF ST. PETE BEACH
PUMP & LIFT STATION
REHABILITATIONS
PID# PS26-401-608-00
PINELLAS COUNY FLORIDA

DATE:
APRIL 2026

PROJECT NO.
148404108

SHEET NUMBER
E-04

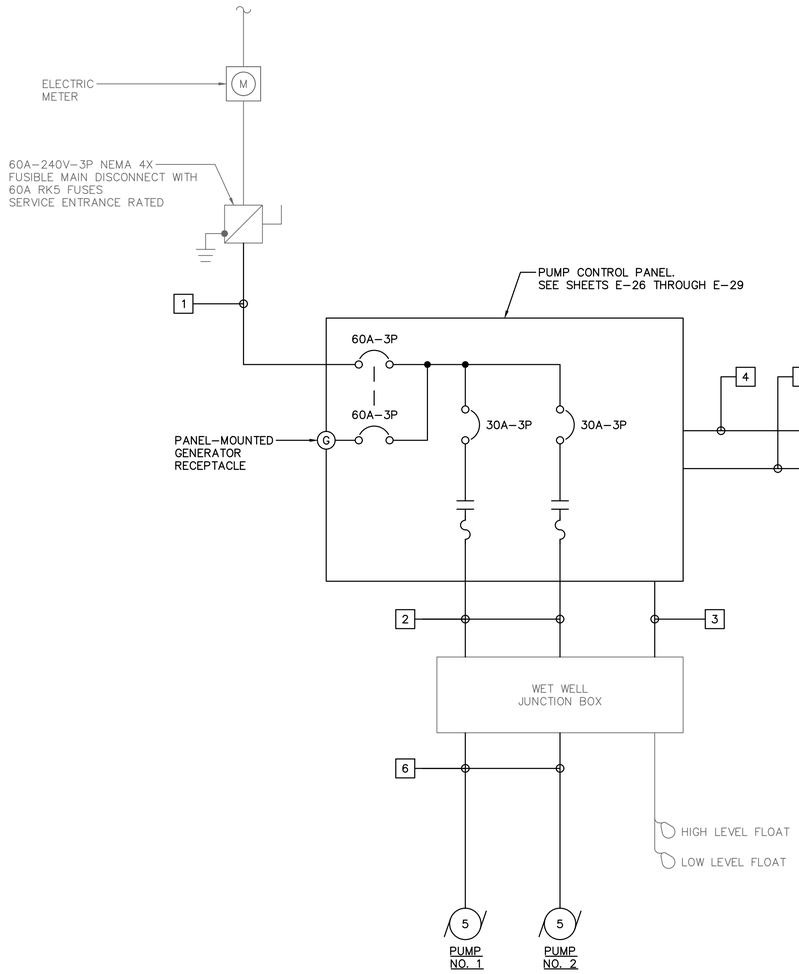

A ELECTRICAL ONE–LINE DIAGRAM

SCALE: NO SCALE

GENERAL NOTES:

1. REUSE EXISTING CONDUIT TO THE FULLEST EXTENT POSSIBLE.
2. CONDUITS SHOWN ARE REPRESENTATIVE ONLY. CONTRACTOR SHALL DETERMINE CONDUIT LOCATION AND ROUTING.
3. COORDINATE FLOAT LEVEL SWITCH ELEVATIONS WITH THE CITY.
4. EXISTING FLOATS NOT USED SHALL BE SECURED ABOVE THE HIGH LEVEL FLOAT FOR USE AS SPARES.

KEY NOTES:

1. 4#6 AND #10 GND. IN 1–1/4" CONDUIT
2. 3#10, 4#14, AND #10 GND. IN 2" CONDUIT
3. 8#14 IN 2" CONDUIT
4. SPARE 2" CONDUIT
5. 32#14, #14 GND., AND (2) 1 PR. #16 SHLD. IN 2"C
6. SUBMERSIBLE PUMP CABLES IN 2" CONDUIT

1

ELECTRICAL LOAD CALCULATION

LOAD DESCRIPTION	HP	CONN. LOAD (KVA)	DEMAND FACTOR (DF)	DEMAND LOAD (KVA)
SEWAGE PUMP NO. 1 (LARGEST MOTOR)	5	6.32	1.25	7.90
SEWAGE PUMP NO. 2	5	6.32	1.00	6.32
AUXILIARY EQUIPMENT		1.00	1.00	1.00
TOTAL:		13.64		15.22

ELECTRICAL LOAD SUMMARY

SERVICE VOLTAGE:	240	V
PHASE:	3	
CONNECTED LOAD:	13.64	KVA
	32.81	A
DEMAND LOAD:	15.22	KVA
	36.61	A
LOAD MULTIPLIER:	1.25	
MINIMUM SERVICE:	19.02	KVA
	45.76	A
SEVICE ENTRANCE TRIP RATING:	60	A
MINIMUM SHORT CIRCUIT CURRENT RATING:	22	KAIC

B ELECTRICAL LOAD CALCULATIONS

SCALE: NO SCALE

No.	Revisions	Date	By
1	BID ADDENDUM #5	4/16/2026	JAH

Kimley»Horn

© 2025 KIMLEY-HORN AND ASSOCIATES, INC.

200 CENTRAL AVENUE, SUITE 600
ST. PETERSBURG, FL 33701
P. 727 547 3999
WWW.KIMLEY-HORN.COM REGISTRY NO. 35106

DESIGN ENGINEER: JASON A. HOYT, P.E.
FL LICENSE NUMBER 101453
DATE:

SCALE: AS NOTED
DESIGN: JAH
DRAWN: EBW
CHECKED: JAH

LIFT STATION 5 REHABILITATION
ELECTRICAL ONE-LINE DIAGRAM

CITY OF ST. PETE BEACH
PUMP & LIFT STATION REHABILITATIONS
PID# PS26-401-608-00
PINELLAS COUNY FLORIDA

DATE: APRIL 2026

PROJECT NO. 148404108

SHEET NUMBER E-05

NORTH

GRAPHIC SCALE IN FEET
0 2.5 5 10

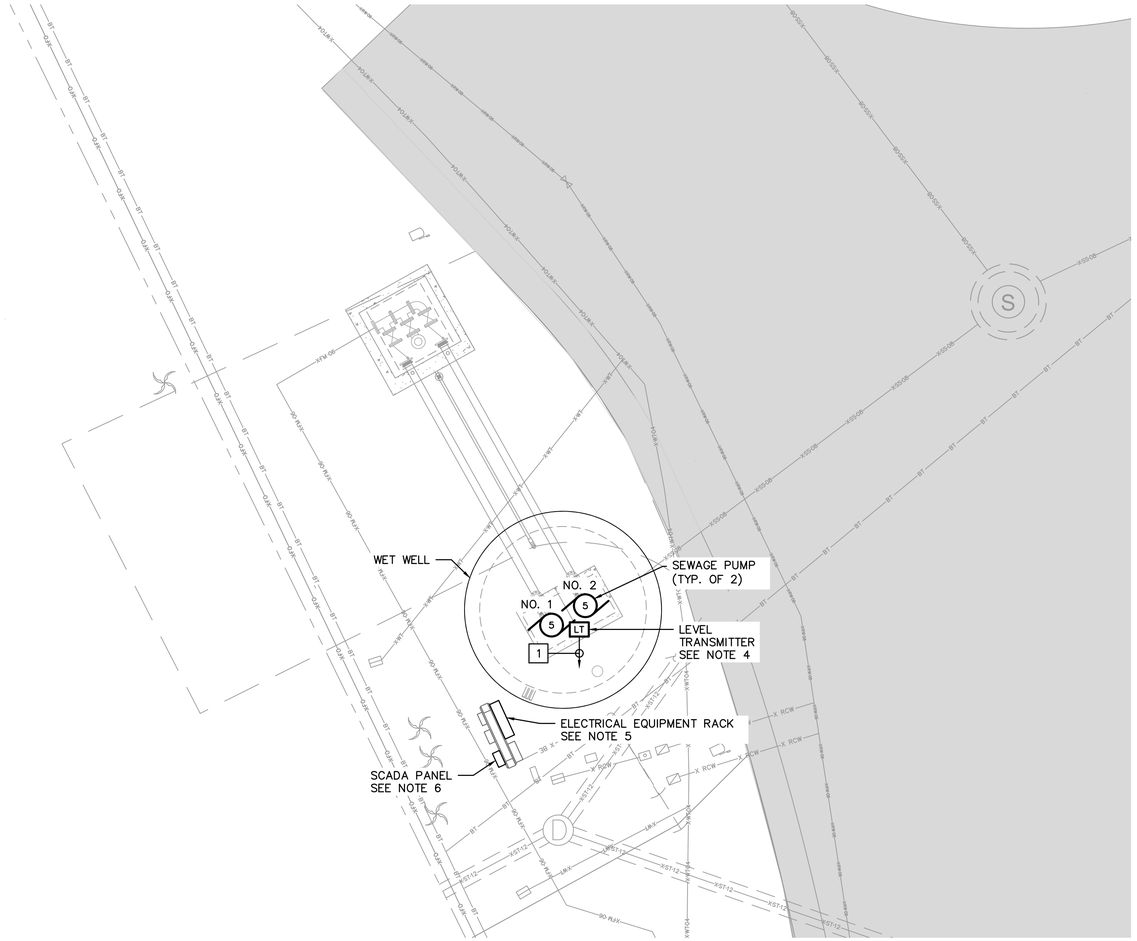

A ELECTRICAL SITE PLAN
SCALE: 1" = 5'

GENERAL NOTES:

1. REUSE EXISTING CONDUIT TO THE FULLEST EXTENT POSSIBLE.
2. CONDUITS SHOWN ARE REPRESENTATIVE ONLY. CONTRACTOR SHALL DETERMINE CONDUIT LOCATION AND ROUTING.
3. SEE ONE-LINE DIAGRAM ON SHEET E-07 FOR ADDITIONAL CONDUIT AND WIRING.
4. REPLACE EXISTING SUBMERSIBLE LEVEL TRANSMITTER WITH A RADAR LEVEL TRANSMITTER. SEE INSTALLATION DETAIL ON SHEET E-41.
5. REPLACE ATL PUMP CONTROL PANEL ON ELECTRICAL EQUIPMENT RACK. SEE EQUIPMENT RACK ELEVATION ON SHEET E-22 AND ATL PUMP CONTROL PANEL ON SHEETS E-26 THROUGH E-29.
6. CITY PROVIDED AND INSTALLED SCADA PANEL AND ANTENNA. COORDINATE REPLACEMENT WITH THE CITY.

KEY NOTES:

[1] LEVEL TRANSMITTER CABLE IN EXISTING 1-1/4" CONDUIT TO SCADA PANEL ON ELECTRICAL EQUIPMENT RACK.

No.	Revisions	Date	By

Kimley»Horn

© 2025 KIMLEY-HORN AND ASSOCIATES, INC.
200 CENTRAL AVENUE, SUITE 600
ST. PETERSBURG, FL 33701
P. 727 547 3999
WWW.KIMLEY-HORN.COM REGISTRY NO. 35106

DESIGN ENGINEER:
JASON A. HOYT, P.E.
FL LICENSE NUMBER
101453
DATE:

SCALE: AS NOTED
DESIGN: JAH
DRAWN: EBW
CHECKED: JAH

LIFT STATION 9 REHABILITATION
ELECTRICAL SITE PLAN

CITY OF ST. PETE BEACH
PUMP & LIFT STATION
REHABILITATIONS
PID# PS26-401-608-00
PINELLAS COUNY FLORIDA

DATE:
APRIL 2026

PROJECT NO.
148404108

SHEET NUMBER
E-06

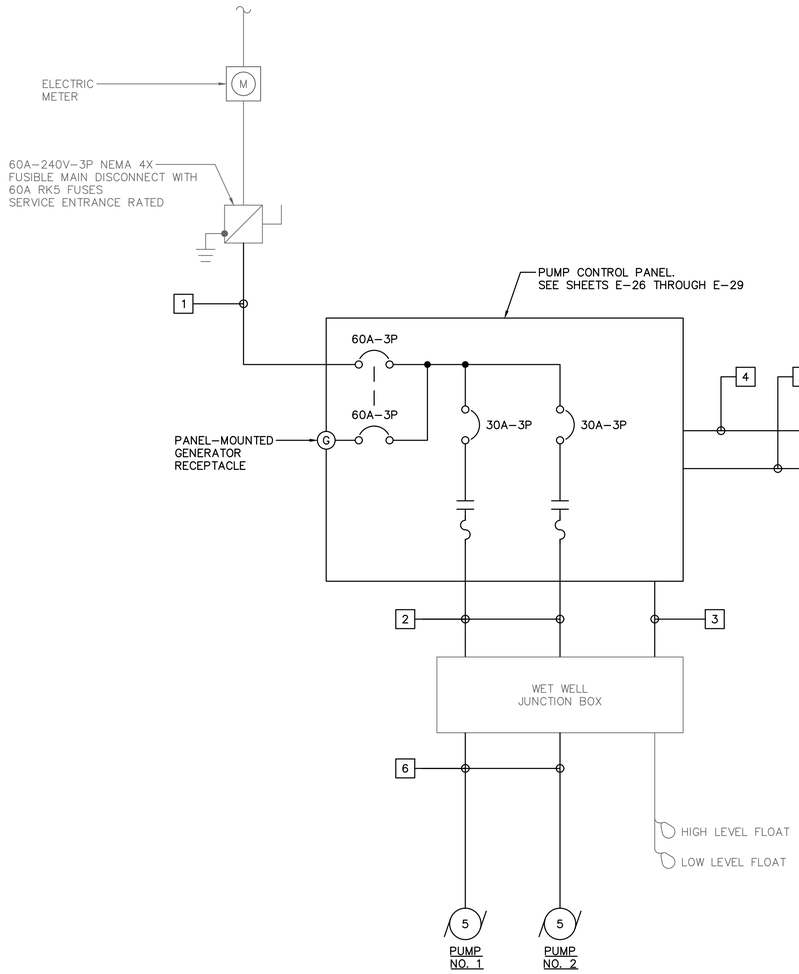

A ELECTRICAL ONE–LINE DIAGRAM

SCALE: NO SCALE

GENERAL NOTES:

1. REUSE EXISTING CONDUIT TO THE FULLEST EXTENT POSSIBLE.
2. CONDUITS SHOWN ARE REPRESENTATIVE ONLY. CONTRACTOR SHALL DETERMINE CONDUIT LOCATION AND ROUTING.
3. COORDINATE FLOAT LEVEL SWITCH ELEVATIONS WITH THE CITY.
4. EXISTING FLOATS NOT USED SHALL BE SECURED ABOVE THE HIGH LEVEL FLOAT FOR USE AS SPARES.

KEY NOTES:

1. 4#6 AND #10 GND. IN 1–1/4" CONDUIT
2. 3#10, 4#14, AND #10 GND. IN 2" CONDUIT
3. 8#14 IN 2" CONDUIT
4. SPARE 2" CONDUIT
5. 32#14, #14 GND., AND (2) 1 PR. #16 SHLD. IN 2"C
6. SUBMERSIBLE PUMP CABLES IN 2" CONDUIT

1

ELECTRICAL LOAD CALCULATION

LOAD DESCRIPTION	HP	CONN. LOAD (KVA)	DEMAND FACTOR (DF)	DEMAND LOAD (KVA)
SEWAGE PUMP NO. 1 (LARGEST MOTOR)	5	6.32	1.25	7.90
SEWAGE PUMP NO. 2	5	6.32	1.00	6.32
AUXILIARY EQUIPMENT		1.00	1.00	1.00
TOTAL:		13.64		15.22

ELECTRICAL LOAD SUMMARY

SERVICE VOLTAGE:	240	V
PHASE:	3	
CONNECTED LOAD:	13.64	KVA
	32.81	A
DEMAND LOAD:	15.22	KVA
	36.61	A
LOAD MULTIPLIER:	1.25	
MINIMUM SERVICE:	19.02	KVA
	45.76	A
SEVICE ENTRANCE TRIP RATING:	60	A
MINIMUM SHORT CIRCUIT CURRENT RATING:	22	KAIC

B ELECTRICAL LOAD CALCULATIONS

SCALE: NO SCALE

No.	Revisions	Date	By
1	BID ADDENDUM #5	4/16/2026	JAH

Kimley»Horn
© 2025 KIMLEY-HORN AND ASSOCIATES, INC.
200 CENTRAL AVENUE, SUITE 600
ST. PETERSBURG, FL 33701
P. 727 547 3999
WWW.KIMLEY-HORN.COM REGISTRY NO. 35106

DESIGN ENGINEER:
JASON A. HOYT, P.E.
FL LICENSE NUMBER
101453
DATE:

SCALE: AS NOTED
DESIGN: JAH
DRAWN: EBW
CHECKED: JAH

LIFT STATION 9 REHABILITATION
ELECTRICAL ONE-LINE DIAGRAM

CITY OF ST. PETE BEACH
PUMP & LIFT STATION
REHABILITATIONS
PID# PS26-401-608-00
FLORIDA
PINELLAS COUNY

DATE:
APRIL 2026

PROJECT NO.
148404108

SHEET NUMBER
E-07

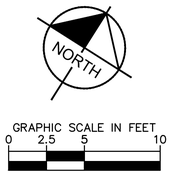

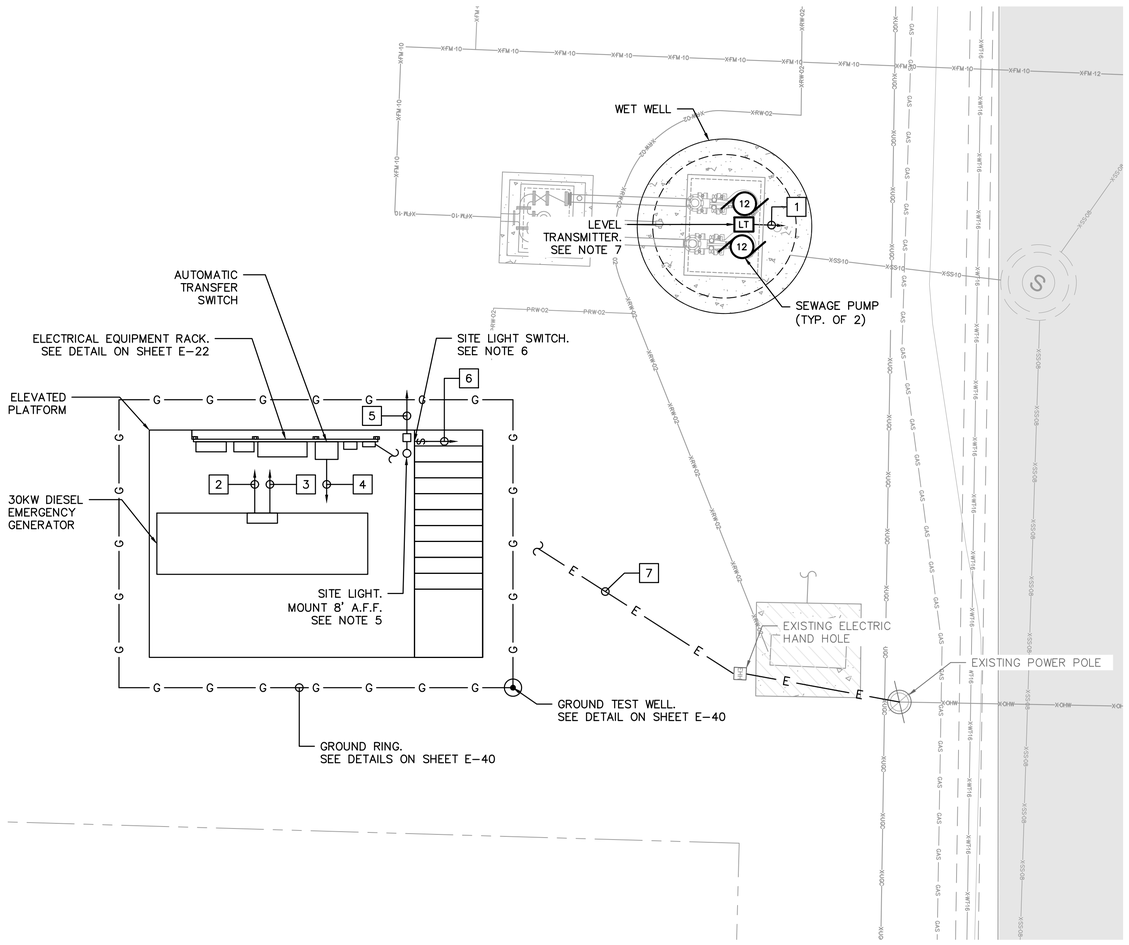

A ELECTRICAL SITE PLAN
SCALE: 1" = 5'

GENERAL NOTES:

1. COORDINATE RELOCATION OF ELECTRIC SERVICE WITH DUKE ENERGY.
2. REUSE EXISTING CONDUIT TO THE FULLEST EXTENT POSSIBLE.
3. CONDUITS SHOWN ARE REPRESENTATIVE ONLY. CONTRACTOR SHALL DETERMINE CONDUIT LOCATION AND ROUTING.
4. SEE ONE-LINE DIAGRAM ON SHEET E-03 FOR ADDITIONAL CONDUIT AND WIRING.
5. POLE-MOUNTED FIXTURE, LITHONIA #DSXF1 LED P2 40K WFL MVOLT IS DDBXD. CONTRACTOR TO FIELD ADJUST ORIENTATION AS REQUIRED.
6. WEATHERPROOF 20A-1P SITE LIGHT SWITCH. MOUNT TO THE ELEVATED PLATFORM COLUMN, 48" ABOVE THE STEP.
7. REPLACE EXISTING SUBMERSIBLE LEVEL TRANSMITTER WITH A RADAR LEVEL TRANSMITTER. SEE INSTALLATION DETAIL ON SHEET E-41.

KEY NOTES:

1. LEVEL TRANSMITTER CABLE IN EXISTING 1-1/4" CONDUIT TO SCADA PANEL ON ELECTRICAL EQUIPMENT RACK
2. 2#12 AND #12 GND. IN 3/4" CONDUIT TO PUMP CONTROL PANEL ON ELECTRICAL EQUIPMENT RACK
3. 8#14 IN AND (1) ETHERNET CABLE 1" CONDUIT TO SCADA PANEL ON ELECTRICAL EQUIPMENT RACK
4. 4#14 AND (1) ETHERNET CABLE IN 1" CONDUIT TO SCADA PANEL ON ELECTRICAL EQUIPMENT RACK
5. 2#12 AND #12 GND. IN 1" CONDUIT TO PUMP CONTROL PANEL ON ELECTRICAL EQUIPMENT RACK
6. 2#12 AND #12 GND. IN 1" CONDUIT TO SITE LIGHT
7. 4#1 IN 1-1/2" CONDUIT TO EXISTING POWER POLE RUN THROUGH EXISTING ELECTRICAL HAND HOLE

No.	Revisions	Date	By

Kimley»Horn
© 2025 KIMLEY-HORN AND ASSOCIATES, INC.
200 CENTRAL AVENUE, SUITE 600
ST. PETERSBURG, FL 33701
P. 727 547 3999
WWW.KIMLEY-HORN.COM REGISTRY NO. 35106

DESIGN ENGINEER:
JASON A. HOYT, P.E.
FL LICENSE NUMBER
101453
DATE:

SCALE: AS NOTED
DESIGN: JAH
DRAWN: EBW
CHECKED: JAH

LIFT STATION 10 REHABILITATION
ELECTRICAL SITE PLAN

CITY OF ST. PETE BEACH
PUMP & LIFT STATION
REHABILITATIONS
PID# PS26-401-608-00
PINELLAS COUNY FLORIDA

DATE:
APRIL 2026

PROJECT NO.
148404108

SHEET NUMBER
E-08

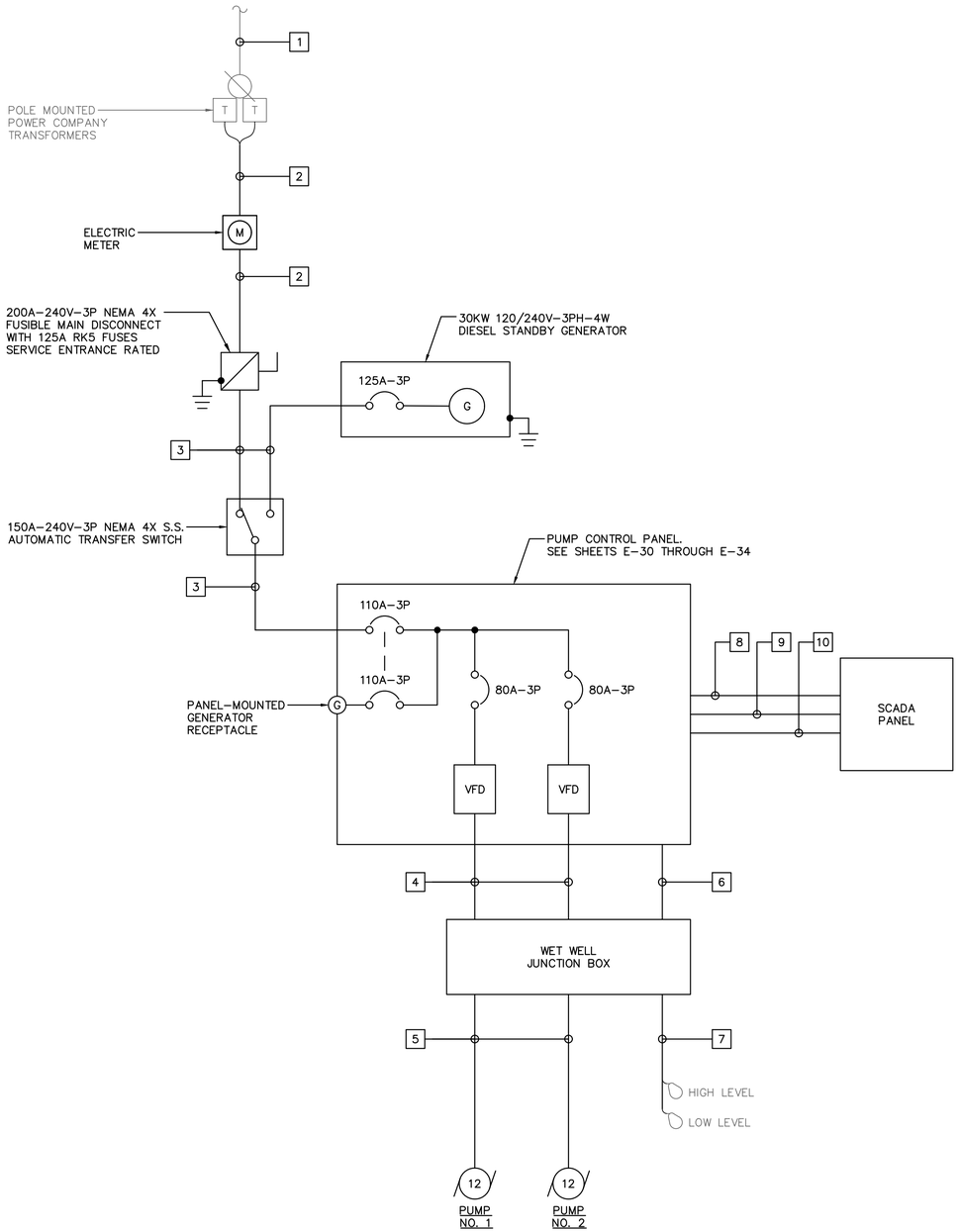

A ELECTRICAL ONE-LINE DIAGRAM

SCALE: NO SCALE

GENERAL NOTES:

1. COORDINATE RELOCATION OF ELECTRIC SERVICE WITH DUKE ENERGY.
2. REUSE EXISTING CONDUIT TO THE FULLEST EXTENT POSSIBLE.
3. CONDUITS SHOWN ARE REPRESENTATIVE ONLY. CONTRACTOR SHALL DETERMINE CONDUIT LOCATION AND ROUTING.
4. COORDINATE FLOAT LEVEL SWITCH ELEVATIONS WITH THE CITY.
5. EXISTING FLOATS NOT USED SHALL BE SECURED ABOVE THE HIGH LEVEL FLOAT FOR USE AS SPARES.

KEY NOTES:

1. PRIMARY OVERHEAD ELECTRIC SERVICE
2. 4#1 IN 1–1/2" CONDUIT
3. 4#1 AND #6 GND. IN 2" CONDUIT
4. 3#4, 4#14, AND #8 GND. IN 2" CONDUIT
5. SUBMERSIBLE PUMP CABLES IN 2" CONDUIT
6. 8#14 IN 2" CONDUIT
7. FLOAT SWITCH CABLES IN 2" CONDUIT
8. SPARE 2" CONDUIT
9. 32#14, #14 GND., AND (6) 1 PR. #16 SHLD. IN 2 1/2"C
10. (2) ETHERNET CABLES IN 1" CONDUIT

1

ELECTRICAL LOAD CALCULATION

LOAD DESCRIPTION	HP	CONN. LOAD (KVA)	DEMAND FACTOR (DF)	DEMAND LOAD (KVA)
SEWAGE PUMP NO. 1 (LARGEST MOTOR)	12	13.97	1.25	17.46
SEWAGE PUMP NO. 2	12	13.97	1.00	13.97
AUXILIARY EQUIPMENT		3.00	1.00	3.00
TOTAL:		30.93		34.43

ELECTRICAL LOAD SUMMARY

SERVICE VOLTAGE:	240	V
PHASE:	3	
CONNECTED LOAD:	30.93	KVA
	74.42	A
DEMAND LOAD:	34.43	KVA
	82.82	A
LOAD MULTIPLIER:	1.25	
MINIMUM SERVICE:	43.03	KVA
	103.52	A
SEVICE ENTRANCE TRIP RATING:	125	A
MINIMUM SHORT CIRCUIT CURRENT RATING:	22	KAIC

B ELECTRICAL LOAD CALCULATIONS

SCALE: NO SCALE

No.	Revisions	Date	By
1	BID ADDENDUM #5	4/16/2026	JAH

Kimley»Horn

© 2025 KIMLEY-HORN AND ASSOCIATES, INC.
200 CENTRAL AVENUE, SUITE 600
ST. PETERSBURG, FL 33701
P: 727 547 3999
WWW.KIMLEY-HORN.COM REGISTRY NO. 35106

DESIGN ENGINEER:
JASON A. HOYT, P.E.
FL LICENSE NUMBER
101453
DATE:

SCALE: AS NOTED
DESIGN: JAH
DRAWN: EBW
CHECKED: JAH

LIFT STATION 10 REHABILITATION
ELECTRICAL ONE-LINE DIAGRAM

CITY OF ST. PETE BEACH
PUMP & LIFT STATION
REHABILITATIONS
PID# PS26-401-608-00
PINELLAS COUNY FLORIDA

DATE:
APRIL 2026

PROJECT NO.
148404108

SHEET NUMBER
E-09

NORTH

GRAPHIC SCALE IN FEET
0 2.5 5 10

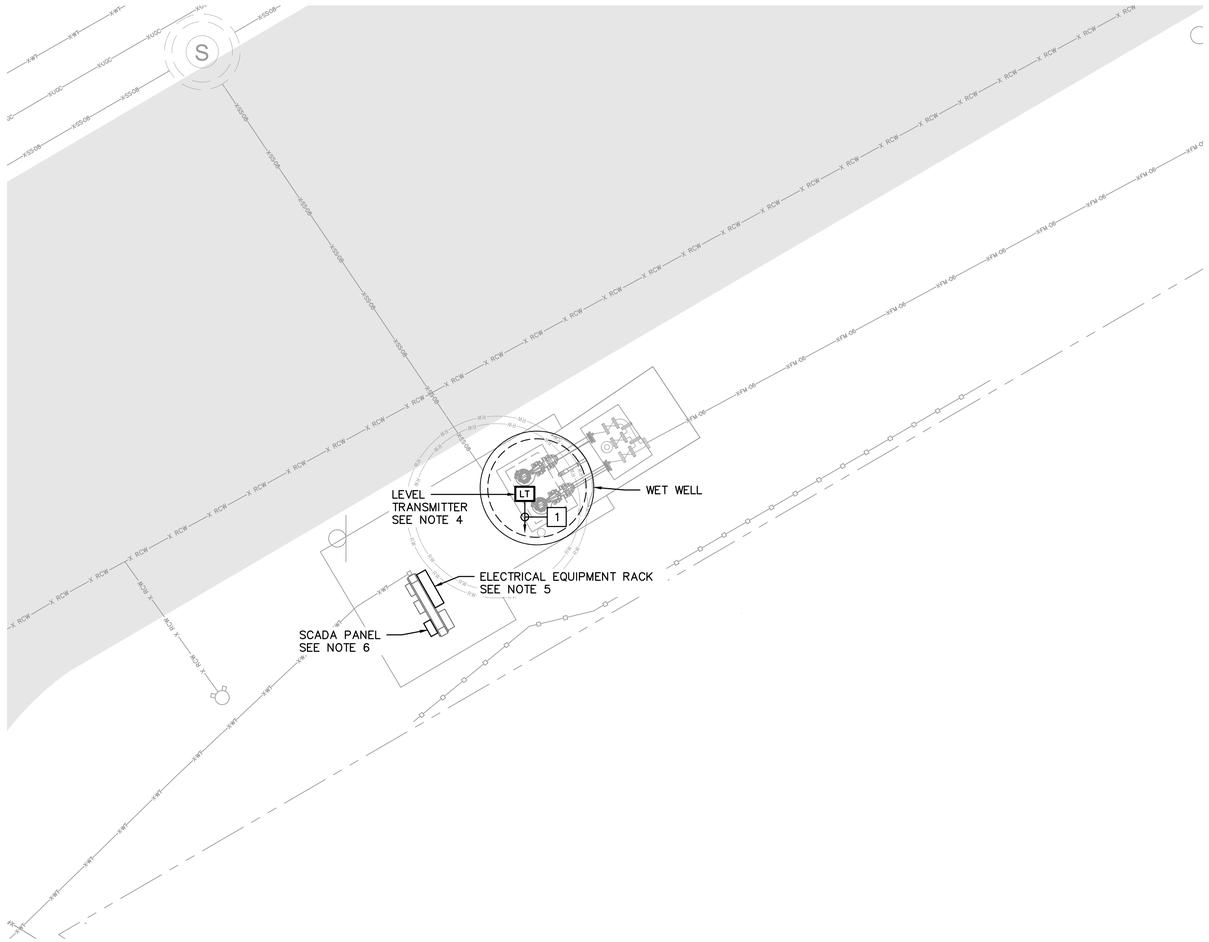

A ELECTRICAL SITE PLAN
SCALE: 1" = 5'

GENERAL NOTES:

1. REUSE EXISTING CONDUIT TO THE FULLEST EXTENT POSSIBLE.
2. CONDUITS SHOWN ARE REPRESENTATIVE ONLY. CONTRACTOR SHALL DETERMINE CONDUIT LOCATION AND ROUTING.
3. SEE ONE-LINE DIAGRAM ON SHEET E-11 FOR ADDITIONAL CONDUIT AND WIRING.
4. REPLACE EXISTING SUBMERSIBLE LEVEL TRANSMITTER WITH A RADAR LEVEL TRANSMITTER. SEE INSTALLATION DETAIL ON SHEET E-41.
5. REPLACE ATL PUMP CONTROL PANEL ON ELECTRICAL EQUIPMENT RACK. SEE EQUIPMENT RACK ELEVATION ON SHEET E-22 AND ATL PUMP CONTROL PANEL ON SHEETS E-26 THROUGH E-29.
6. CITY PROVIDED AND INSTALLED SCADA PANEL AND ANTENNA. COORDINATE REPLACEMENT WITH THE CITY.

KEY NOTES:

[1] LEVEL TRANSMITTER CABLE IN EXISTING 1-1/4" CONDUIT TO SCADA PANEL ON ELECTRICAL EQUIPMENT RACK.

No.	Revisions	Date	By

Kimley»Horn

© 2025 KIMLEY-HORN AND ASSOCIATES, INC.
200 CENTRAL AVENUE, SUITE 600
ST. PETERSBURG, FL 33701
P. 727 547 3999
WWW.KIMLEY-HORN.COM REGISTRY NO. 35106

DESIGN ENGINEER:
JASON A. HOYT, P.E.
FL LICENSE NUMBER
101453
DATE:

SCALE: AS NOTED
DESIGN: JAH
DRAWN: EBW
CHECKED: JAH

LIFT STATION 11 REHABILITATION
ELECTRICAL SITE PLAN

CITY OF ST. PETE BEACH
PUMP & LIFT STATION
REHABILITATIONS
PID# PS26-401-608-00
PINELLAS COUNY FLORIDA

DATE:
APRIL 2026

PROJECT NO.
148404108

SHEET NUMBER
E-10

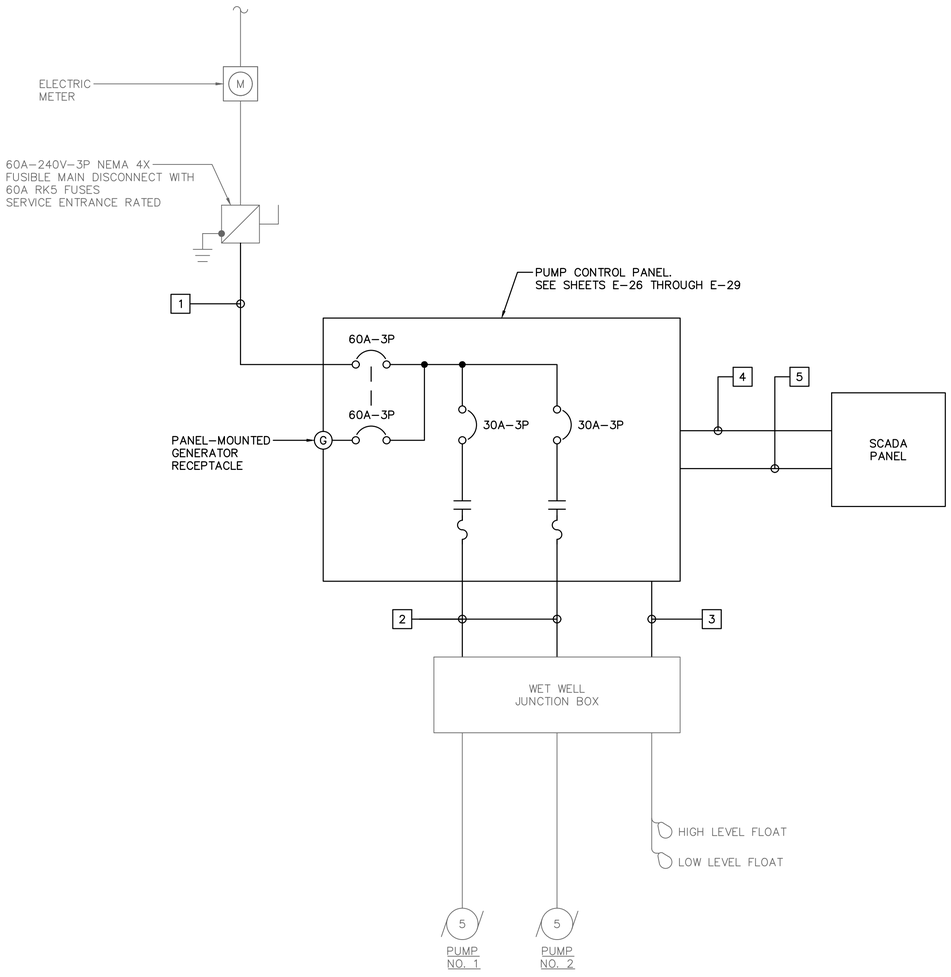

A ELECTRICAL ONE–LINE DIAGRAM

SCALE: NO SCALE

GENERAL NOTES:

1. REUSE EXISTING CONDUIT TO THE FULLEST EXTENT POSSIBLE.
2. CONDUITS SHOWN ARE REPRESENTATIVE ONLY. CONTRACTOR SHALL DETERMINE CONDUIT LOCATION AND ROUTING.
3. COORDINATE FLOAT LEVEL SWITCH ELEVATIONS WITH THE CITY.
4. EXISTING FLOATS NOT USED SHALL BE SECURED ABOVE THE HIGH LEVEL FLOAT FOR USE AS SPARES.

KEY NOTES:

1. 4#6 AND #10 GND. IN 1–1/4" CONDUIT
2. 3#10, 4#14, AND #10 GND. IN 2" CONDUIT
3. 8#14 IN 2" CONDUIT
4. SPARE 2" CONDUIT
5. 32#14, #14 GND., AND (2) 1 PR. #16 SHLD. IN 2"C

1

ELECTRICAL LOAD CALCULATION

LOAD DESCRIPTION	HP	CONN. LOAD (KVA)	DEMAND FACTOR (DF)	DEMAND LOAD (KVA)
SEWAGE PUMP NO. 1 (LARGEST MOTOR)	5	6.32	1.25	7.90
SEWAGE PUMP NO. 2	5	6.32	1.00	6.32
AUXILIARY EQUIPMENT		1.00	1.00	1.00
TOTAL:		13.64		15.22

ELECTRICAL LOAD SUMMARY

SERVICE VOLTAGE:	240	V
PHASE:	3	
CONNECTED LOAD:	13.64	KVA
	32.81	A
DEMAND LOAD:	15.22	KVA
	36.61	A
LOAD MULTIPLIER:	1.25	
MINIMUM SERVICE:	19.02	KVA
	45.76	A
SEVICE ENTRANCE TRIP RATING:	60	A
MINIMUM SHORT CIRCUIT CURRENT RATING:	22	KAIC

B ELECTRICAL LOAD CALCULATIONS

SCALE: NO SCALE

No.	Revisions	Date	By
1	BID ADDENDUM #5	4/16/2026	JAH

Kimley»Horn
© 2025 KIMLEY-HORN AND ASSOCIATES, INC.
200 CENTRAL AVENUE, SUITE 600
ST. PETERSBURG, FL 33701
P. 727 547 3999
WWW.KIMLEY-HORN.COM REGISTRY NO. 35106

DESIGN ENGINEER:
JASON A. HOYT, P.E.
FL LICENSE NUMBER
101453
DATE:

SCALE: AS NOTED
DESIGN: JAH
DRAWN: EBW
CHECKED: JAH

LIFT STATION 11 REHABILITATION
ELECTRICAL ONE-LINE DIAGRAM

CITY OF ST. PETE BEACH
PUMP & LIFT STATION
REHABILITATIONS
PID# PS26-401-608-00
FLORIDA
PINELLAS COUNY

DATE:
APRIL 2026

PROJECT NO.
148404108

SHEET NUMBER
E-11

NORTH

GRAPHIC SCALE IN FEET
0 2.5 5 10

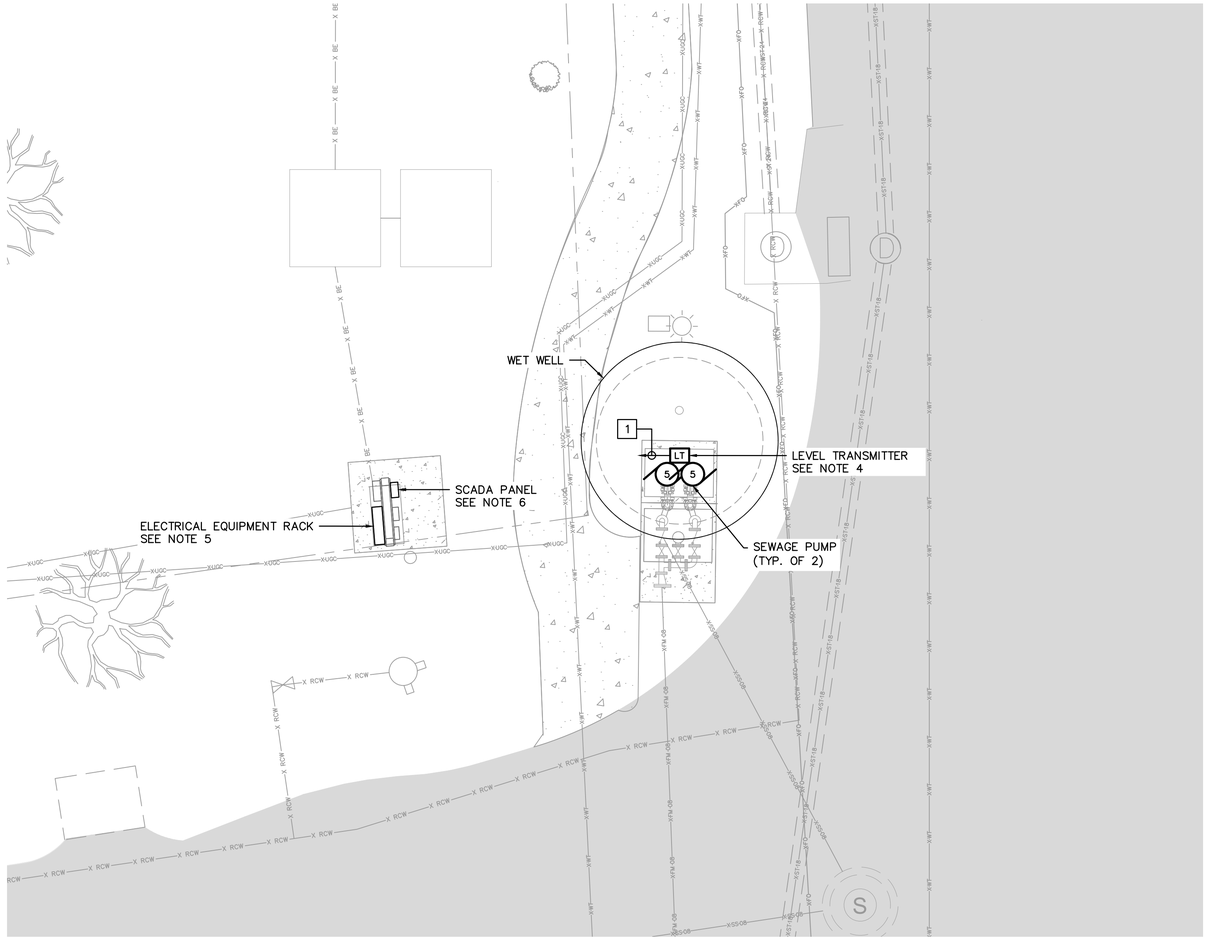

A ELECTRICAL SITE PLAN
SCALE: 1" = 5'

GENERAL NOTES:

1. REUSE EXISTING CONDUIT TO THE FULLEST EXTENT POSSIBLE.
2. CONDUITS SHOWN ARE REPRESENTATIVE ONLY. CONTRACTOR SHALL DETERMINE CONDUIT LOCATION AND ROUTING.
3. SEE ONE-LINE DIAGRAM ON SHEET E-13 FOR ADDITIONAL CONDUIT AND WIRING.
4. REPLACE EXISTING SUBMERSIBLE LEVEL TRANSMITTER WITH A RADAR LEVEL TRANSMITTER. SEE INSTALLATION DETAIL ON SHEET E-41.
5. REPLACE ATL PUMP CONTROL PANEL ON ELECTRICAL EQUIPMENT RACK. SEE EQUIPMENT RACK ELEVATION ON SHEET E-22 AND ATL PUMP CONTROL PANEL ON SHEETS E-26 THROUGH E-29.
6. CITY PROVIDED AND INSTALLED SCADA PANEL AND ANTENNA. COORDINATE REPLACEMENT WITH THE CITY.

KEY NOTES:

[1] LEVEL TRANSMITTER CABLE IN EXISTING 1-1/4" CONDUIT TO SCADA PANEL ON ELECTRICAL EQUIPMENT RACK.

No.	Revisions	Date	By

Kimley»Horn

© 2025 KIMLEY-HORN AND ASSOCIATES, INC.
200 CENTRAL AVENUE, SUITE 600
ST. PETERSBURG, FL 33701
P. 727 547 3999
WWW.KIMLEY-HORN.COM REGISTRY NO. 35106

DESIGN ENGINEER: JASON A. HOYT, P.E.
FL LICENSE NUMBER 101453
DATE:

SCALE: AS NOTED
DESIGN: JAH
DRAWN: EBW
CHECKED: JAH

LIFT STATION 12 REHABILITATION
ELECTRICAL SITE PLAN

CITY OF ST. PETE BEACH
PUMP & LIFT STATION
REHABILITATIONS
PID# PS26-401-608-00
PINELLAS COUNY FLORIDA

DATE:
APRIL 2026

PROJECT NO.
148404108

SHEET NUMBER
E-12

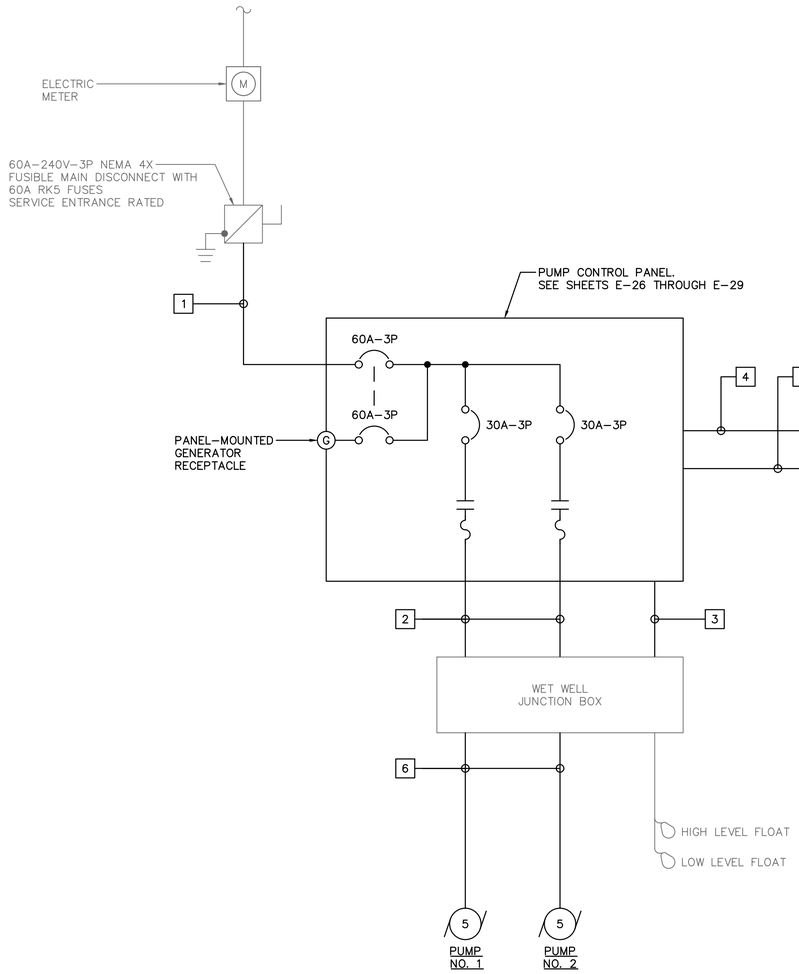

A ELECTRICAL ONE–LINE DIAGRAM

SCALE: NO SCALE

GENERAL NOTES:

1. REUSE EXISTING CONDUIT TO THE FULLEST EXTENT POSSIBLE.
2. CONDUITS SHOWN ARE REPRESENTATIVE ONLY. CONTRACTOR SHALL DETERMINE CONDUIT LOCATION AND ROUTING.
3. COORDINATE FLOAT LEVEL SWITCH ELEVATIONS WITH THE CITY.
4. EXISTING FLOATS NOT USED SHALL BE SECURED ABOVE THE HIGH LEVEL FLOAT FOR USE AS SPARES.

KEY NOTES:

1. 4#6 AND #10 GND. IN 1–1/4" CONDUIT
2. 3#10, 4#14, AND #10 GND. IN 2" CONDUIT
3. 8#14 IN 2" CONDUIT
4. SPARE 2" CONDUIT
5. 32#14, #14 GND., AND (2) 1 PR. #16 SHLD. IN 2"C
6. SUBMERSIBLE PUMP CABLES IN 2" CONDUIT

1

ELECTRICAL LOAD CALCULATION				
LOAD DESCRIPTION	HP	CONN. LOAD (KVA)	DEMAND FACTOR (DF)	DEMAND LOAD (KVA)
SEWAGE PUMP NO. 1 (LARGEST MOTOR)	5	6.32	1.25	7.90
SEWAGE PUMP NO. 2	5	6.32	1.00	6.32
AUXILIARY EQUIPMENT		1.00	1.00	1.00
TOTAL:		13.64		15.22

ELECTRICAL LOAD SUMMARY		
SERVICE VOLTAGE:	240	V
PHASE:	3	
CONNECTED LOAD:	13.64	KVA
	32.81	A
DEMAND LOAD:	15.22	KVA
	36.61	A
LOAD MULTIPLIER:	1.25	
MINIMUM SERVICE:	19.02	KVA
	45.76	A
SEVICE ENTRANCE TRIP RATING:	60	A
MINIMUM SHORT CIRCUIT CURRENT RATING:	22	KAIC

B ELECTRICAL LOAD CALCULATIONS

SCALE: NO SCALE

No.	Revisions	Date	By
1	BID ADDENDUM #5	4/16/2026	JAH

Kimley»Horn
© 2025 KIMLEY-HORN AND ASSOCIATES, INC.
200 CENTRAL AVENUE, SUITE 600
ST. PETERSBURG, FL 33701
P. 727 547 3999
WWW.KIMLEY-HORN.COM REGISTRY NO. 35106

DESIGN ENGINEER:
JASON A. HOYT, P.E.
FL LICENSE NUMBER
101453
DATE:

SCALE: AS NOTED
DESIGN: JAH
DRAWN: EBW
CHECKED: JAH

LIFT STATION 12 REHABILITATION
ELECTRICAL ONE-LINE DIAGRAM

CITY OF ST. PETE BEACH
PUMP & LIFT STATION
REHABILITATIONS
PID# PS26-401-608-00
FLORIDA
PINELLAS COUNY

DATE:
APRIL 2026

PROJECT NO.
148404108

SHEET NUMBER
E-13

NORTH

GRAPHIC SCALE IN FEET
0 2.5 5 10

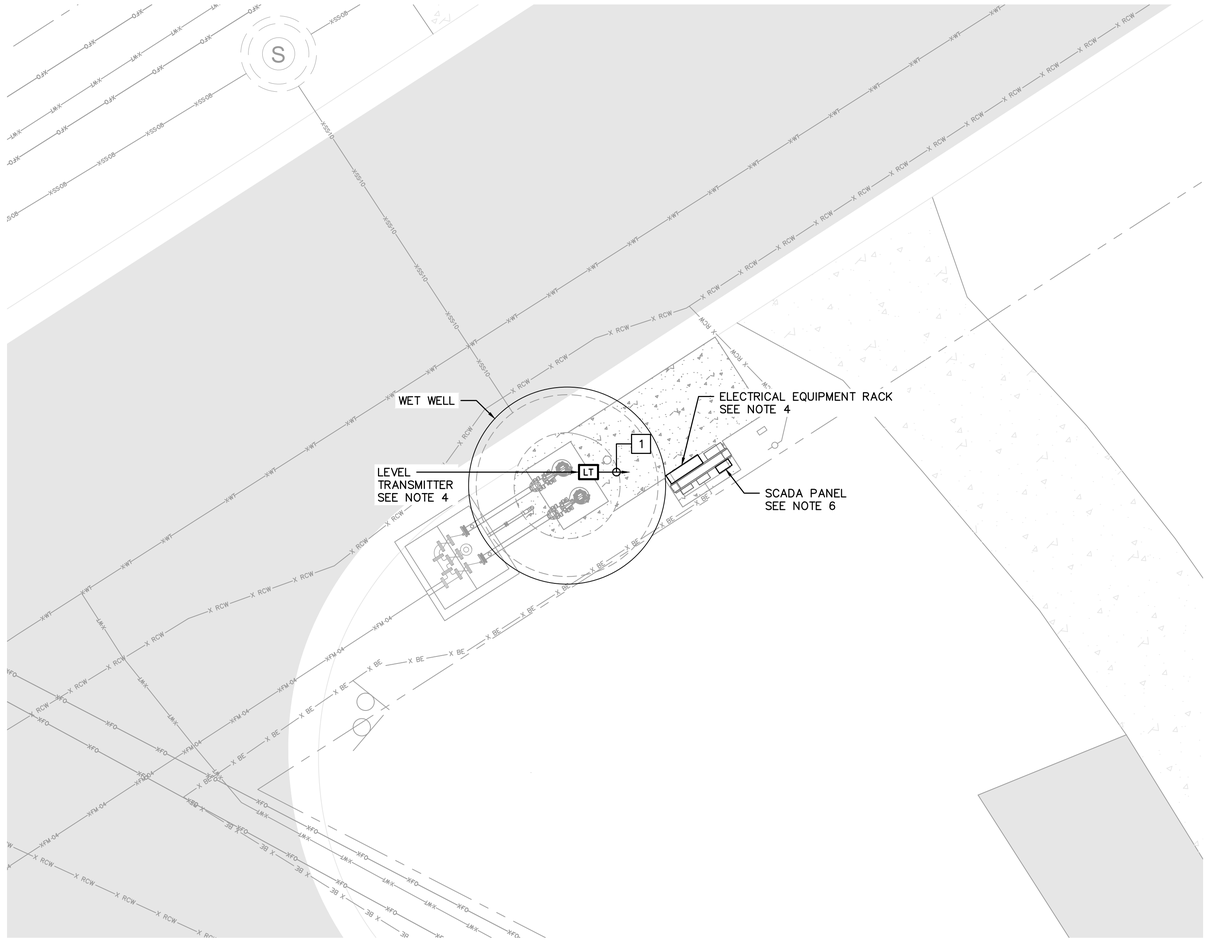

A ELECTRICAL SITE PLAN
SCALE: 1" = 5'

GENERAL NOTES:

1. REUSE EXISTING CONDUIT TO THE FULLEST EXTENT POSSIBLE.
2. CONDUITS SHOWN ARE REPRESENTATIVE ONLY. CONTRACTOR SHALL DETERMINE CONDUIT LOCATION AND ROUTING.
3. SEE ONE-LINE DIAGRAM ON SHEET E-15 FOR ADDITIONAL CONDUIT AND WIRING.
4. REPLACE EXISTING SUBMERSIBLE LEVEL TRANSMITTER WITH A RADAR LEVEL TRANSMITTER. SEE INSTALLATION DETAIL ON SHEET E-41.
5. REPLACE ATL PUMP CONTROL PANEL ON ELECTRICAL EQUIPMENT RACK. SEE EQUIPMENT RACK ELEVATION ON SHEET E-22 AND ATL PUMP CONTROL PANEL ON SHEETS E-26 THROUGH E-29.
6. CITY PROVIDED AND INSTALLED SCADA PANEL AND ANTENNA. COORDINATE REPLACEMENT WITH THE CITY.

KEY NOTES:

[1] LEVEL TRANSMITTER CABLE IN EXISTING 1-1/4" CONDUIT TO SCADA PANEL ON ELECTRICAL EQUIPMENT RACK.

No.	Revisions	Date	By

Kimley»Horn

© 2025 KIMLEY-HORN AND ASSOCIATES, INC.
200 CENTRAL AVENUE, SUITE 600
ST. PETERSBURG, FL 33701
P. 727 547 3999
WWW.KIMLEY-HORN.COM REGISTRY NO. 35106

DESIGN ENGINEER:
JASON A. HOYT, P.E.
FL LICENSE NUMBER
101453
DATE:

SCALE: AS NOTED
DESIGN: JAH
DRAWN: EBW
CHECKED: JAH

LIFT STATION 13 REHABILITATION
ELECTRICAL SITE PLAN

CITY OF ST. PETE BEACH
PUMP & LIFT STATION
REHABILITATIONS
PID# PS26-401-608-00
PINELLAS COUNY FLORIDA

DATE:
APRIL 2026

PROJECT NO.
148404108

SHEET NUMBER
E-14

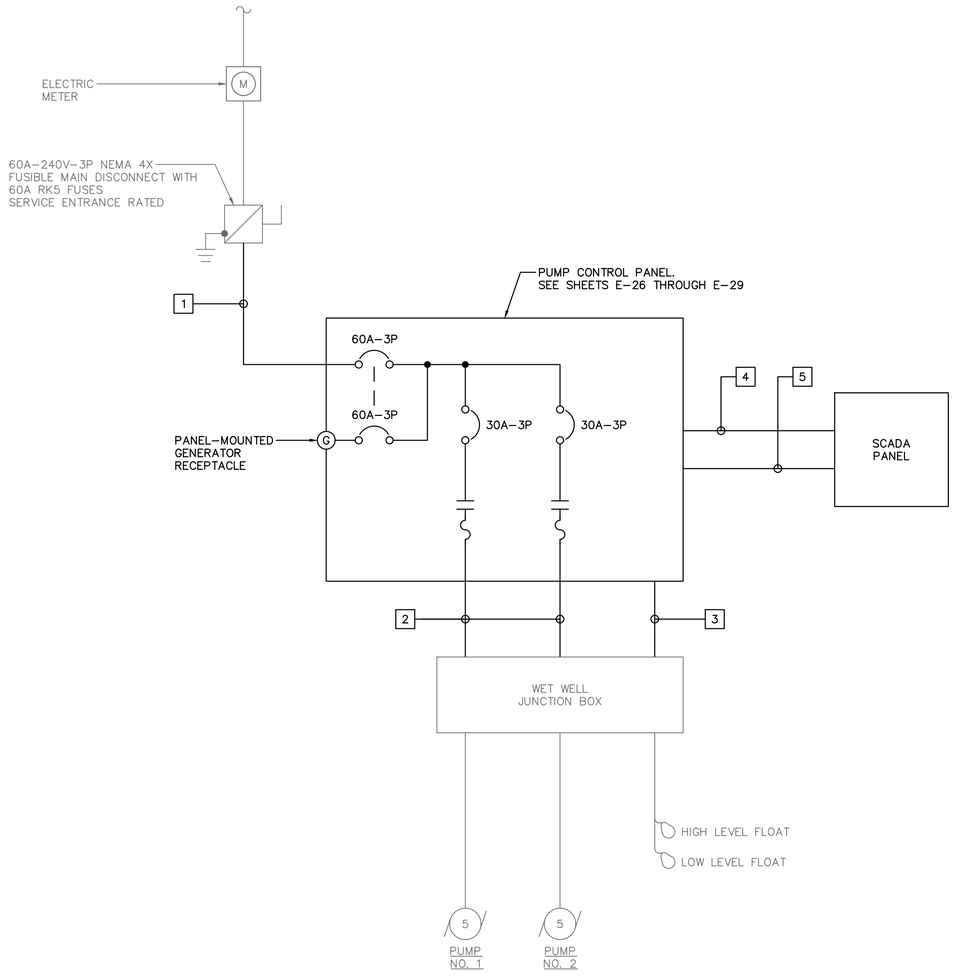

A ELECTRICAL ONE–LINE DIAGRAM

SCALE: NO SCALE

GENERAL NOTES:

1. REUSE EXISTING CONDUIT TO THE FULLEST EXTENT POSSIBLE.
2. CONDUITS SHOWN ARE REPRESENTATIVE ONLY. CONTRACTOR SHALL DETERMINE CONDUIT LOCATION AND ROUTING.
3. COORDINATE FLOAT LEVEL SWITCH ELEVATIONS WITH THE CITY.
4. EXISTING FLOATS NOT USED SHALL BE SECURED ABOVE THE HIGH LEVEL FLOAT FOR USE AS SPARES.

KEY NOTES:

1. 4#6 AND #10 GND. IN 1–1/4" CONDUIT
2. 3#10, 4#14, AND #10 GND. IN 2" CONDUIT
3. 8#14 IN 2" CONDUIT
4. SPARE 2" CONDUIT
5. 32#14, #14 GND., AND (2) 1 PR. #16 SHLD. IN 2"C

1

ELECTRICAL LOAD CALCULATION

LOAD DESCRIPTION	HP	CONN. LOAD (KVA)	DEMAND FACTOR (DF)	DEMAND LOAD (KVA)
SEWAGE PUMP NO. 1 (LARGEST MOTOR)	5	6.32	1.25	7.90
SEWAGE PUMP NO. 2	5	6.32	1.00	6.32
AUXILIARY EQUIPMENT		1.00	1.00	1.00
TOTAL:		13.64		15.22

ELECTRICAL LOAD SUMMARY

SERVICE VOLTAGE:	240	V
PHASE:	3	
CONNECTED LOAD:	13.64	KVA
	32.81	A
DEMAND LOAD:	15.22	KVA
	36.61	A
LOAD MULTIPLIER:	1.25	
MINIMUM SERVICE:	19.02	KVA
	45.76	A
SEVICE ENTRANCE TRIP RATING:	60	A
MINIMUM SHORT CIRCUIT CURRENT RATING:	22	KAIC

B ELECTRICAL LOAD CALCULATIONS

SCALE: NO SCALE

No.	Revisions	Date	By
1	BID ADDENDUM #5	4/16/2026	JAH

Kimley»Horn
© 2025 KIMLEY-HORN AND ASSOCIATES, INC.
200 CENTRAL AVENUE, SUITE 600
ST. PETERSBURG, FL 33701
P. 727 547 3999
WWW.KIMLEY-HORN.COM REGISTRY NO. 35106

DESIGN ENGINEER:
JASON A. HOYT, P.E.
FL LICENSE NUMBER
101453
DATE:

SCALE: AS NOTED
DESIGN: JAH
DRAWN: EBW
CHECKED: JAH

LIFT STATION 13 REHABILITATION
ELECTRICAL ONE-LINE DIAGRAM

CITY OF ST. PETE BEACH
PUMP & LIFT STATION
REHABILITATIONS
PID# PS26-401-608-00
PINELLAS COUNY
FLORIDA

DATE:
APRIL 2026

PROJECT NO.
148404108

SHEET NUMBER
E-15

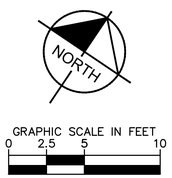

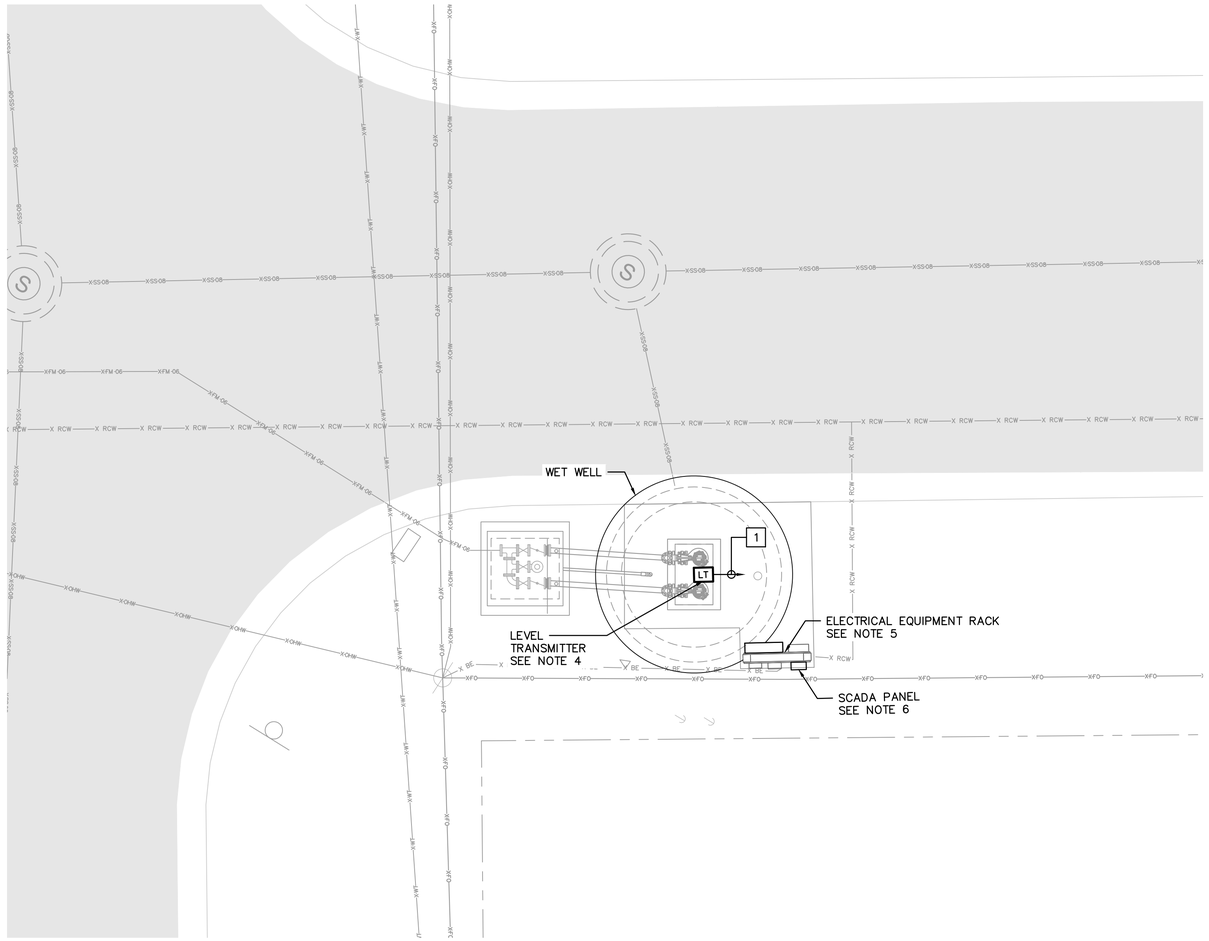

A ELECTRICAL SITE PLAN
SCALE: 1" = 5'

GENERAL NOTES:

1. REUSE EXISTING CONDUIT TO THE FULLEST EXTENT POSSIBLE.
2. CONDUITS SHOWN ARE REPRESENTATIVE ONLY. CONTRACTOR SHALL DETERMINE CONDUIT LOCATION AND ROUTING.
3. SEE ONE-LINE DIAGRAM ON SHEET E-17 FOR ADDITIONAL CONDUIT AND WIRING.
4. REPLACE EXISTING SUBMERSIBLE LEVEL TRANSMITTER WITH A RADAR LEVEL TRANSMITTER. SEE INSTALLATION DETAIL ON SHEET E-41.
5. REPLACE ATL PUMP CONTROL PANEL ON ELECTRICAL EQUIPMENT RACK. SEE EQUIPMENT RACK ELEVATION ON SHEET E-22 AND ATL PUMP CONTROL PANEL ON SHEETS E-26 THROUGH E-29.
6. CITY PROVIDED AND INSTALLED SCADA PANEL AND ANTENNA. COORDINATE REPLACEMENT WITH THE CITY.

KEY NOTES:

[1] LEVEL TRANSMITTER CABLE IN EXISTING 1-1/4" CONDUIT TO SCADA PANEL ON ELECTRICAL EQUIPMENT RACK.

No.	Revisions	Date	By

Kimley»Horn

© 2025 KIMLEY-HORN AND ASSOCIATES, INC.
200 CENTRAL AVENUE, SUITE 600
ST. PETERSBURG, FL 33701
P. 727 547 3999
WWW.KIMLEY-HORN.COM REGISTRY NO. 35106

DESIGN ENGINEER: JASON A. HOYT, P.E.
FL LICENSE NUMBER 101453
DATE:

SCALE: AS NOTED
DESIGN: JAH
DRAWN: EBW
CHECKED: JAH

LIFT STATION 14 REHABILITATION
ELECTRICAL SITE PLAN

CITY OF ST. PETE BEACH
PUMP & LIFT STATION REHABILITATIONS
PID# PS26-401-608-00
PINELLAS COUNY FLORIDA

DATE: APRIL 2026

PROJECT NO. 148404108

SHEET NUMBER E-16

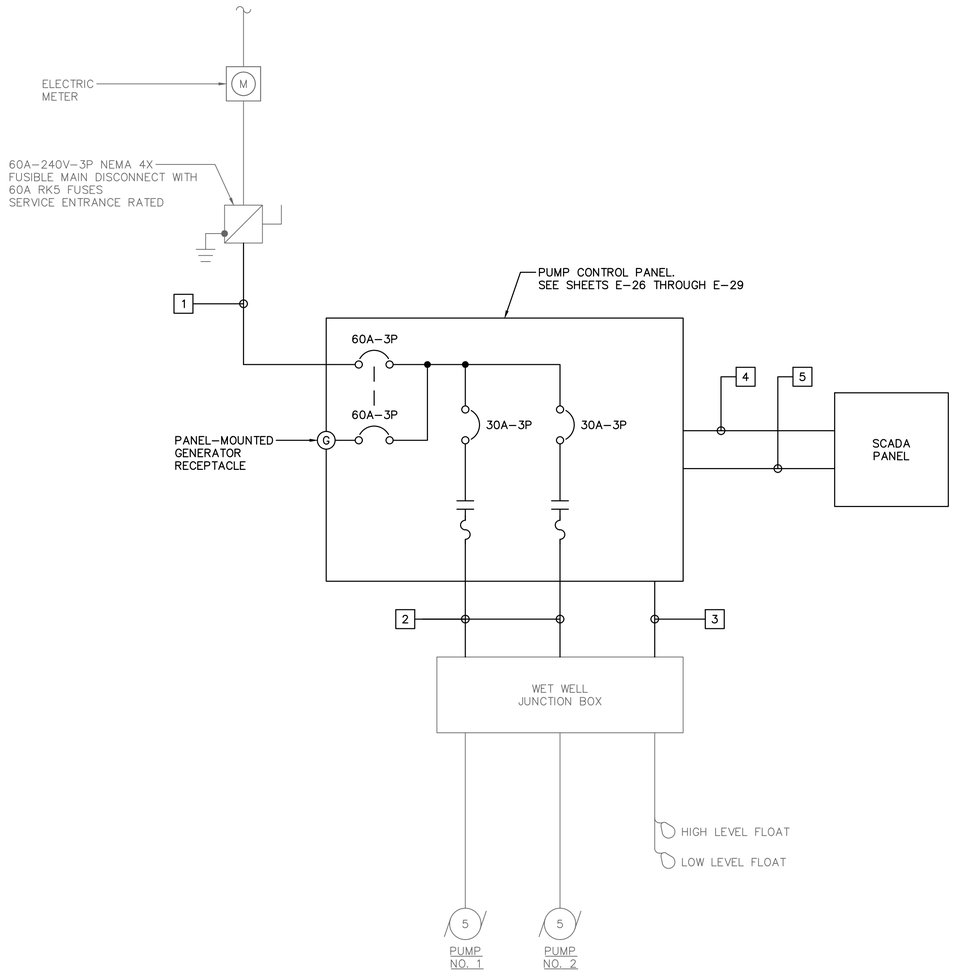

A ELECTRICAL ONE–LINE DIAGRAM

SCALE: NO SCALE

GENERAL NOTES:

1. REUSE EXISTING CONDUIT TO THE FULLEST EXTENT POSSIBLE.
2. CONDUITS SHOWN ARE REPRESENTATIVE ONLY. CONTRACTOR SHALL DETERMINE CONDUIT LOCATION AND ROUTING.
3. COORDINATE FLOAT LEVEL SWITCH ELEVATIONS WITH THE CITY.
4. EXISTING FLOATS NOT USED SHALL BE SECURED ABOVE THE HIGH LEVEL FLOAT FOR USE AS SPARES.

KEY NOTES:

1. 4#6 AND #10 GND. IN 1–1/4" CONDUIT
2. 3#10, 4#14, AND #10 GND. IN 2" CONDUIT
3. 8#14 IN 2" CONDUIT
4. SPARE 2" CONDUIT
5. 32#14, #14 GND., AND (2) 1 PR. #16 SHLD. IN 2"C

1

ELECTRICAL LOAD CALCULATION

LOAD DESCRIPTION	HP	CONN. LOAD (KVA)	DEMAND FACTOR (DF)	DEMAND LOAD (KVA)
SEWAGE PUMP NO. 1 (LARGEST MOTOR)	5	6.32	1.25	7.90
SEWAGE PUMP NO. 2	5	6.32	1.00	6.32
AUXILIARY EQUIPMENT		1.00	1.00	1.00
TOTAL:		13.64		15.22

ELECTRICAL LOAD SUMMARY

SERVICE VOLTAGE:	240	V
PHASE:	3	
CONNECTED LOAD:	13.64	KVA
	32.81	A
DEMAND LOAD:	15.22	KVA
	36.61	A
LOAD MULTIPLIER:	1.25	
MINIMUM SERVICE:	19.02	KVA
	45.76	A
SEVICE ENTRANCE TRIP RATING:	60	A
MINIMUM SHORT CIRCUIT CURRENT RATING:	22	KAIC

B ELECTRICAL LOAD CALCULATIONS

SCALE: NO SCALE

No.	Revisions	Date	By
1	BID ADDENDUM #5	4/16/2026	JAH

Kimley»Horn
© 2025 KIMLEY-HORN AND ASSOCIATES, INC.
200 CENTRAL AVENUE, SUITE 600
ST. PETERSBURG, FL 33701
P. 727 547 3999
WWW.KIMLEY-HORN.COM REGISTRY NO. 35106

DESIGN ENGINEER:
JASON A. HOYT, P.E.
FL LICENSE NUMBER
101453
DATE:

SCALE: AS NOTED
DESIGN: JAH
DRAWN: EBW
CHECKED: JAH

LIFT STATION 14 REHABILITATION
ELECTRICAL ONE-LINE DIAGRAM

CITY OF ST. PETE BEACH
PUMP & LIFT STATION
REHABILITATIONS
PID# PS26-401-608-00
FLORIDA
PINELLAS COUNY

DATE:
APRIL 2026

PROJECT NO.
148404108

SHEET NUMBER
E-17

NORTH

GRAPHIC SCALE IN FEET
0 ### # ##

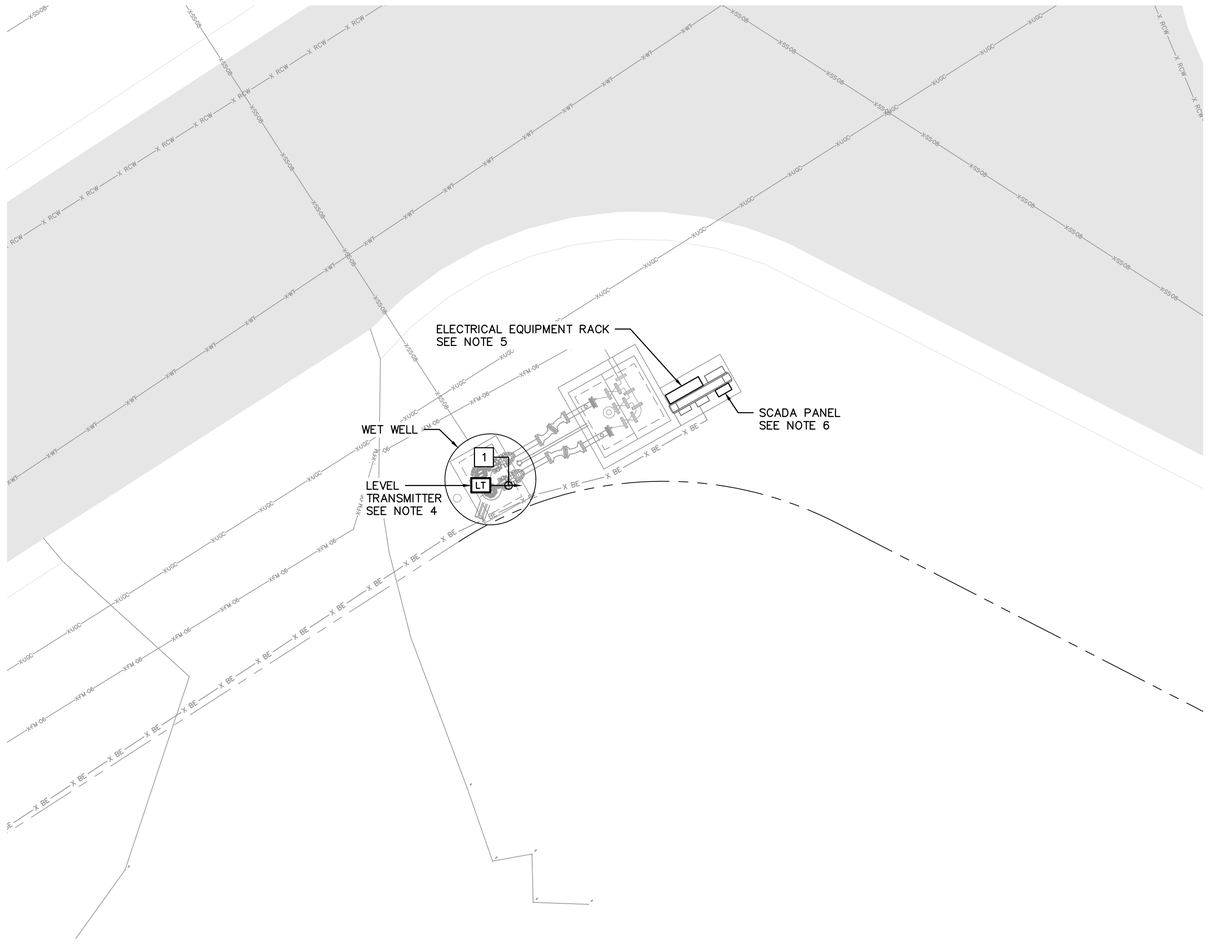

A ELECTRICAL SITE PLAN
SCALE: 1" = 5'

GENERAL NOTES:

1. REUSE EXISTING CONDUIT TO THE FULLEST EXTENT POSSIBLE.
2. CONDUITS SHOWN ARE REPRESENTATIVE ONLY. CONTRACTOR SHALL DETERMINE CONDUIT LOCATION AND ROUTING.
3. SEE ONE-LINE DIAGRAM ON SHEET E-19 FOR ADDITIONAL CONDUIT AND WIRING.
4. REPLACE EXISTING SUBMERSIBLE LEVEL TRANSMITTER WITH A RADAR LEVEL TRANSMITTER. SEE INSTALLATION DETAIL ON SHEET E-41.
5. REPLACE ATL PUMP CONTROL PANEL ON ELECTRICAL EQUIPMENT RACK. SEE EQUIPMENT RACK ELEVATION ON SHEET E-22 AND ATL PUMP CONTROL PANEL ON SHEETS E-26 THROUGH E-29.
6. CITY PROVIDED AND INSTALLED SCADA PANEL AND ANTENNA. COORDINATE REPLACEMENT WITH THE CITY.

KEY NOTES:

[1] LEVEL TRANSMITTER CABLE IN EXISTING 1-1/4" CONDUIT TO SCADA PANEL ON ELECTRICAL EQUIPMENT RACK.

No.	Revisions	Date	By

Kimley»Horn

© 2025 KIMLEY-HORN AND ASSOCIATES, INC.
200 CENTRAL AVENUE, SUITE 600
ST. PETERSBURG, FL 33701
P. 727 547 3999
WWW.KIMLEY-HORN.COM REGISTRY NO. 35106

DESIGN ENGINEER:
JASON A. HOYT, P.E.
FL LICENSE NUMBER
101453
DATE:

SCALE: AS NOTED
DESIGN: JAH
DRAWN: EBW
CHECKED: JAH

LIFT STATION 15 REHABILITATION
ELECTRICAL SITE PLAN

CITY OF ST. PETE BEACH
PUMP & LIFT STATION
REHABILITATIONS
PID# PS26-401-608-00
PINELLAS COUNY FLORIDA

DATE:
APRIL 2026

PROJECT NO.
148404108

SHEET NUMBER
E-18

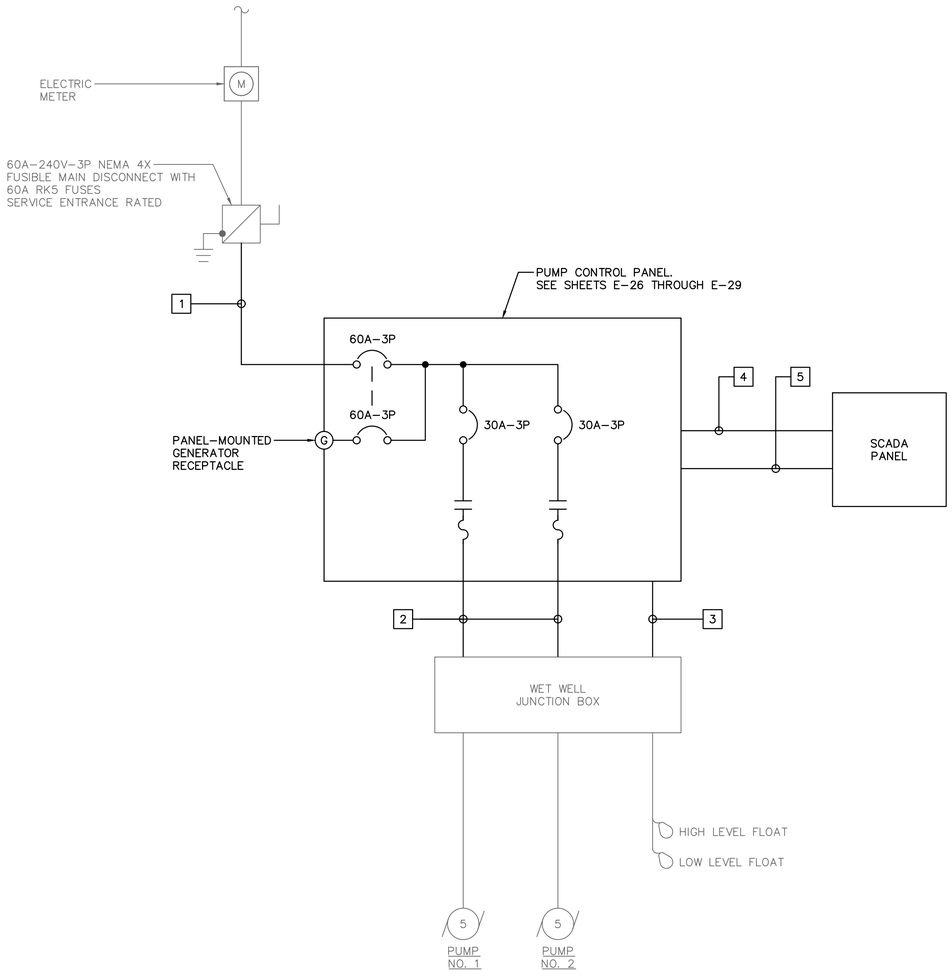

A ELECTRICAL ONE–LINE DIAGRAM

SCALE: NO SCALE

GENERAL NOTES:

1. REUSE EXISTING CONDUIT TO THE FULLEST EXTENT POSSIBLE.
2. CONDUITS SHOWN ARE REPRESENTATIVE ONLY. CONTRACTOR SHALL DETERMINE CONDUIT LOCATION AND ROUTING.
3. COORDINATE FLOAT LEVEL SWITCH ELEVATIONS WITH THE CITY.
4. EXISTING FLOATS NOT USED SHALL BE SECURED ABOVE THE HIGH LEVEL FLOAT FOR USE AS SPARES.

KEY NOTES:

1. 4#6 AND #10 GND. IN 1–1/4" CONDUIT
2. 3#10, 4#14, AND #10 GND. IN 2" CONDUIT
3. 8#14 IN 2" CONDUIT
4. SPARE 2" CONDUIT
5. 32#14, #14 GND., AND (2) 1 PR. #16 SHLD. IN 2"C

1

ELECTRICAL LOAD CALCULATION

LOAD DESCRIPTION	HP	CONN. LOAD (KVA)	DEMAND FACTOR (DF)	DEMAND LOAD (KVA)
SEWAGE PUMP NO. 1 (LARGEST MOTOR)	5	6.32	1.25	7.90
SEWAGE PUMP NO. 2	5	6.32	1.00	6.32
AUXILIARY EQUIPMENT		1.00	1.00	1.00
TOTAL:		13.64		15.22

ELECTRICAL LOAD SUMMARY

SERVICE VOLTAGE:	240	V
PHASE:	3	
CONNECTED LOAD:	13.64	KVA
	32.81	A
DEMAND LOAD:	15.22	KVA
	36.61	A
LOAD MULTIPLIER:	1.25	
MINIMUM SERVICE:	19.02	KVA
	45.76	A
SEVICE ENTRANCE TRIP RATING:	60	A
MINIMUM SHORT CIRCUIT CURRENT RATING:	22	KAIC

B ELECTRICAL LOAD CALCULATIONS

SCALE: NO SCALE

No.	Revisions	Date	By
1	BID ADDENDUM #5	4/16/2026	JAH

Kimley»Horn

© 2025 KIMLEY-HORN AND ASSOCIATES, INC.

200 CENTRAL AVENUE, SUITE 600
ST. PETERSBURG, FL 33701
P. 727 547 3999
WWW.KIMLEY-HORN.COM REGISTRY NO. 35106

DESIGN ENGINEER:
JASON A. HOYT, P.E.
FL LICENSE NUMBER
101453
DATE:

SCALE: AS NOTED
DESIGN: JAH
DRAWN: EBW
CHECKED: JAH

LIFT STATION 15 REHABILITATION
ELECTRICAL ONE-LINE DIAGRAM

CITY OF ST. PETE BEACH
PUMP & LIFT STATION
REHABILITATIONS
PID# PS26-401-608-00
FLORIDA
PINELLAS COUNY

DATE:
APRIL 2026

PROJECT NO.
148404108

SHEET NUMBER
E-19

NORTH

GRAPHIC SCALE IN FEET
0 2.5 5 10



A ELECTRICAL SITE PLAN
SCALE: 1" = 5'

GENERAL NOTES:

1. REUSE EXISTING CONDUIT TO THE FULLEST EXTENT POSSIBLE.
2. CONDUITS SHOWN ARE REPRESENTATIVE ONLY. CONTRACTOR SHALL DETERMINE CONDUIT LOCATION AND ROUTING.
3. SEE ONE-LINE DIAGRAM ON SHEET E-21 FOR ADDITIONAL CONDUIT AND WIRING.
4. REPLACE EXISTING SUBMERSIBLE LEVEL TRANSMITTER WITH A RADAR LEVEL TRANSMITTER. SEE INSTALLATION DETAIL ON SHEET E-41.
5. REPLACE PUMP CONTROL PANEL ON ELECTRICAL EQUIPMENT RACK. SEE EQUIPMENT RACK ELEVATION ON SHEET E-25 AND PUMP CONTROL PANEL ON SHEETS E-35 THROUGH E-39.
6. CITY PROVIDED AND INSTALLED SCADA PANEL AND ANTENNA. COORDINATE REPLACEMENT WITH THE CITY.

KEY NOTES:

[1] LEVEL TRANSMITTER CABLE IN EXISTING 1-1/4" CONDUIT TO SCADA PANEL ON ELECTRICAL EQUIPMENT RACK.

No.	Revisions	Date	By

Kimley»Horn

© 2025 KIMLEY-HORN AND ASSOCIATES, INC.
200 CENTRAL AVENUE, SUITE 600
ST. PETERSBURG, FL 33701
P. 727 547 3999
WWW.KIMLEY-HORN.COM REGISTRY NO. 35106

DESIGN ENGINEER:
JASON A. HOYT, P.E.
FL LICENSE NUMBER
101453
DATE:

SCALE: AS NOTED
DESIGN: JAH
DRAWN: EBW
CHECKED: JAH

STORMWATER LS 35
REHABILITATION ELECTRICAL SITE
PLAN

CITY OF ST. PETE BEACH
PUMP & LIFT STATION
REHABILITATIONS
PID# PS26-401-608-00
PINELLAS COUNY FLORIDA

DATE:
APRIL 2026

PROJECT NO.
148404108

SHEET NUMBER
E-20

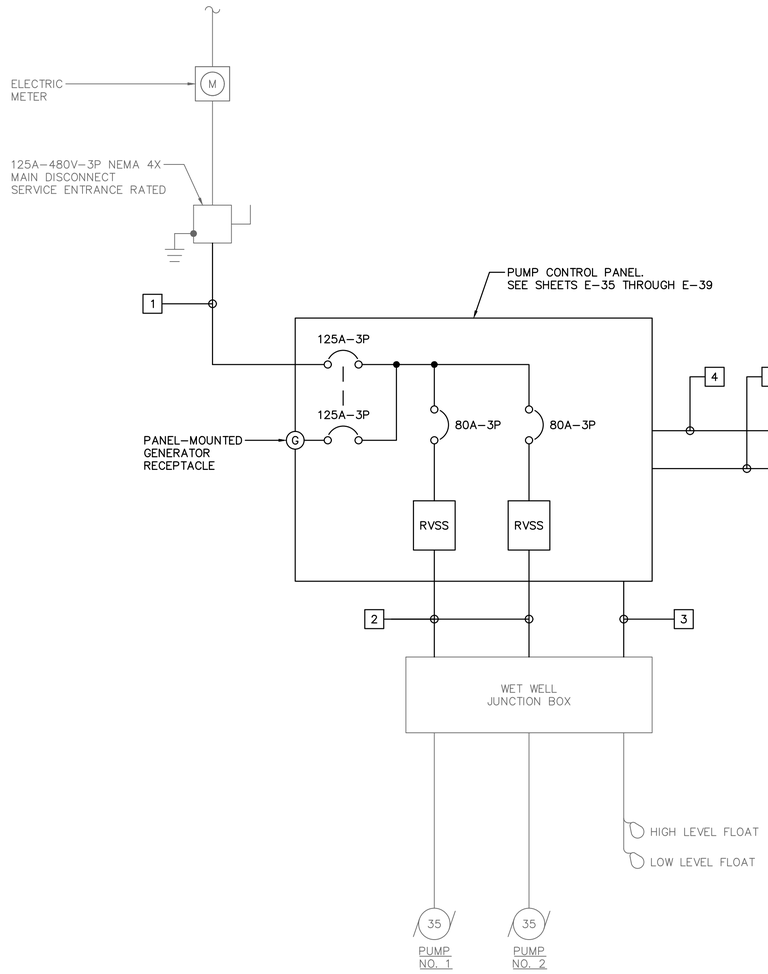

A ELECTRICAL ONE–LINE DIAGRAM

SCALE: NO SCALE

GENERAL NOTES:

1. REUSE EXISTING CONDUIT TO THE FULLEST EXTENT POSSIBLE.
2. CONDUITS SHOWN ARE REPRESENTATIVE ONLY. CONTRACTOR SHALL DETERMINE CONDUIT LOCATION AND ROUTING.
3. COORDINATE FLOAT LEVEL SWITCH ELEVATIONS WITH THE CITY.
4. EXISTING FLOATS NOT USED SHALL BE SECURED ABOVE THE HIGH LEVEL FLOAT FOR USE AS SPARES.

KEY NOTES:

1. 4#1 AND #6 GND. IN 2" CONDUIT
2. 3#4, 4#14, AND #8 GND. IN 2" CONDUIT
3. 8#14 IN 2" CONDUIT
4. SPARE 2" CONDUIT
5. 32#14, #14 GND., AND (2) 1 PR. #16 SHLD. IN 2"C

1

ELECTRICAL LOAD CALCULATION

LOAD DESCRIPTION	HP	CONN. LOAD (KVA)	DEMAND FACTOR (DF)	DEMAND LOAD (KVA)
SEWAGE PUMP NO. 1 (LARGEST MOTOR)	35	38.24	1.25	47.80
SEWAGE PUMP NO. 2	35	38.24	1.00	38.24
AUXILIARY EQUIPMENT		3.00	1.00	3.00
TOTAL:		79.49		89.05

ELECTRICAL LOAD SUMMARY

SERVICE VOLTAGE:	480	V
PHASE:	3	
CONNECTED LOAD:	79.49	KVA
	95.61	A
DEMAND LOAD:	89.05	KVA
	107.11	A
LOAD MULTIPLIER:	1.25	
MINIMUM SERVICE:	111.31	KVA
	133.89	A
SEVICE ENTRANCE TRIP RATING:	125	A
MINIMUM SHORT CIRCUIT CURRENT RATING:	22	KAIC

B ELECTRICAL LOAD CALCULATIONS

SCALE: NO SCALE

No.	Revisions	Date	By
1	BID ADDENDUM #5	4/16/2026	JAH

Kimley»Horn

© 2025 KIMLEY-HORN AND ASSOCIATES, INC.

200 CENTRAL AVENUE, SUITE 600
ST. PETERSBURG, FL 33701
P. 727 547 3999
WWW.KIMLEY-HORN.COM REGISTRY NO. 35106

DESIGN ENGINEER:
JASON A. HOYT, P.E.
FL LICENSE NUMBER
101453
DATE:

SCALE: AS NOTED
DESIGN: JAH
DRAWN: EBW
CHECKED: JAH

STORMWATER LS 35
REHABILITATION ELECTRICAL
ONE-LINE DIAGRAM

CITY OF ST. PETE BEACH
PUMP & LIFT STATION
REHABILITATIONS
PID# PS26-401-608-00

FLORIDA
PINELLAS COUNY

DATE:
APRIL 2026

PROJECT NO.
148404108

SHEET NUMBER
E-21

GENERAL NOTES:

1. INSTALL CONDUITS AND CONDUCTORS FOR SERVICE AND EQUIPMENT GROUND AS REUQIRED BY APPLICABLE CODES AND SPECIFICATIONS.
2. REUSE EXISTING CONDUIT TO THE FULLEST EXTENT POSSIBLE.
3. CONDUITS SHOWN ARE REPRESENTATIVE ONLY. CONTRACTOR SHALL DETERMINE CONDUIT LOCATION AND ROUTING.
4. SEE ONE-LINE DIAGRAMS FOR ADDITIONAL CONDUIT AND WIRING.

KEY NOTES:

1 REPLACE EXISTING PUMP CONTROL PANEL. SEE SHEETS E-26 THROUGH E-29 FOR PUMP CONTROL PANEL LAYOUT AND WIRING DIAGRAMS.

2 CITY PROVIDED AND INSTALLED SCADA PANEL AND ANTENNA. COORDINATE REPLACEMENT WITH THE CITY.

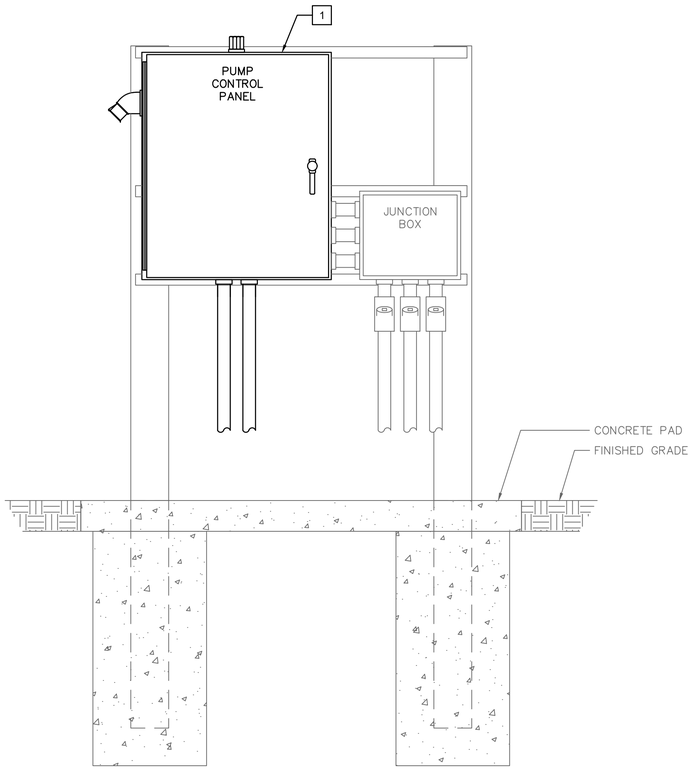

A ELECTRICAL EQUIPMENT RACK – ATL FRONT ELEVATION
SCALE: NO SCALE

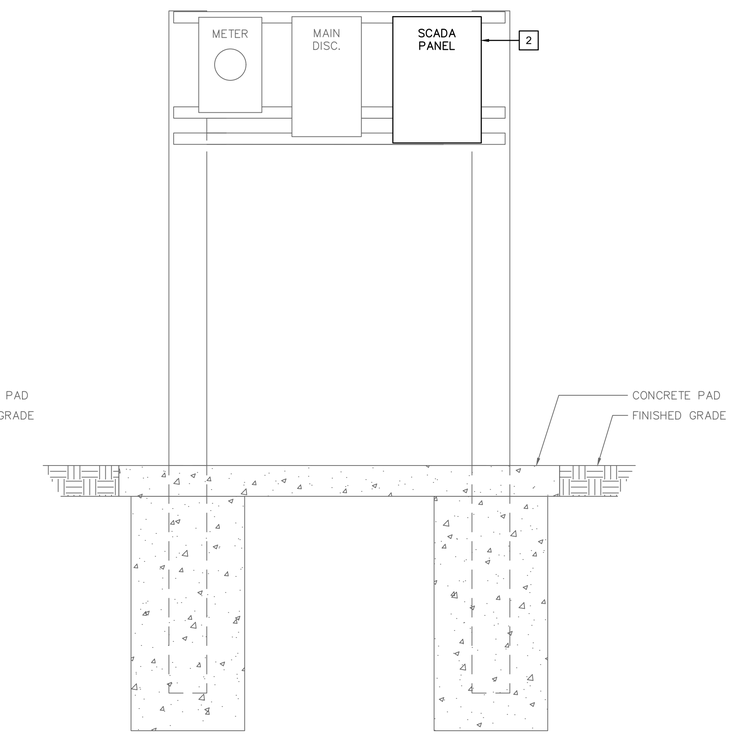

B ELECTRICAL EQUIPMENT RACK – ATL REAR ELEVATION
SCALE: NO SCALE

No.	Revisions	Date	By

Kimley»Horn
© 2025 KIMLEY-HORN AND ASSOCIATES, INC.
200 CENTRAL AVENUE, SUITE 600
ST. PETERSBURG, FL 33701
P. 727 547 3999
WWW.KIMLEY-HORN.COM REGISTRY NO. 35106

DESIGN ENGINEER: JASON A. HOYT, P.E.
FL LICENSE NUMBER 101453
DATE:

SCALE: AS NOTED
DESIGN: JAH
DRAWN: EBW
CHECKED: JAH

ELECTRICAL EQUIPMENT RACK - ATL

CITY OF ST. PETE BEACH
PUMP & LIFT STATION REHABILITATIONS
PID# PS26-401-608-00
PINELLAS COUNY FLORIDA

DATE: APRIL 2026

PROJECT NO. 148404108

SHEET NUMBER E-22

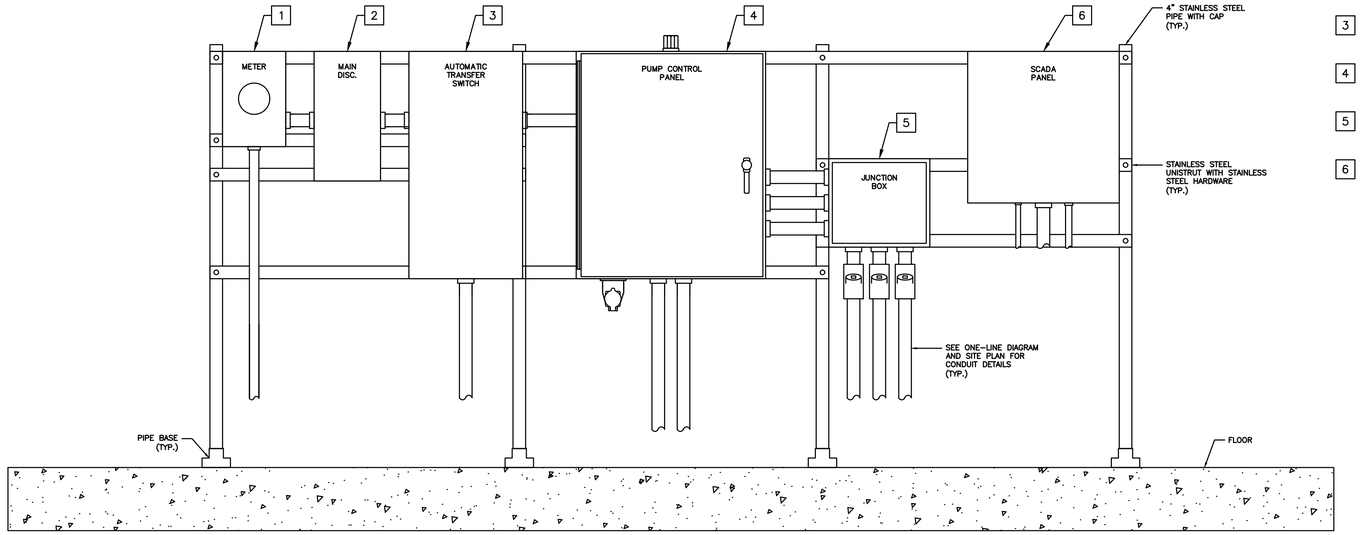

A ELEVATED ELECTRICAL EQUIPMENT RACK ELEVATION - ATL

SCALE: NO SCALE

GENERAL NOTES:

1. INSTALL CONDUITS AND CONDUCTORS FOR SERVICE AND EQUIPMENT GROUND AS REQUIRED BY APPLICABLE CODES AND SPECIFICATIONS.
2. REUSE EXISTING CONDUIT TO THE FULLEST EXTENT POSSIBLE.
3. CONDUITS SHOWN ARE REPRESENTATIVE ONLY. CONTRACTOR SHALL DETERMINE CONDUIT LOCATION AND ROUTING.
4. SEE ONE-LINE DIAGRAMS FOR ADDITIONAL CONDUIT AND WIRING.

KEY NOTES:

1. ELECTRIC METER IN ALUMINUM ENCLOSURE. COORDINATE ELECTRIC METER INSTALLATION WITH ALL UTILITY REQUIREMENTS.
2. HEAVY DUTY, PAD-LOCKABLE, 200A-240V-3P NEMA 4X STAINLESS STEEL FUSIBLE DISCONNECT, SERVICE ENTRANCE RATED. FUSES SHALL BE 240V, 125A, DUAL-ELEMENT, TIME-DELAY RK5 FUSES.
3. ASCO 300 SERIES 150A-240V-3P NEMA 4X STAINLESS STEEL AUTOMATIC TRANSFER SWITCH.
4. SEE SHEETS E-26 THROUGH E-29 FOR PUMP CONTROL PANEL LAYOUT AND WIRING DIAGRAMS.
5. PROVIDE TERMINALS AS REQUIRED IN JUNCTION BOX FOR PUMP CABLES AND FLOAT SWITCH CABLES.
6. CITY PROVIDED AND INSTALLED SCADA PANEL AND ANTENNA. COORDINATE REPLACEMENT WITH THE CITY.

No.	Revisions	Date	By

Kimley»Horn
© 2025 KIMLEY-HORN AND ASSOCIATES, INC.
200 CENTRAL AVENUE, SUITE 600
ST. PETERSBURG, FL 33701
P. 727 547 3999
WWW.KIMLEY-HORN.COM REGISTRY NO. 35106

DESIGN ENGINEER:
JASON A. HOYT, P.E.
FL LICENSE NUMBER
101453
DATE:

SCALE: AS NOTED
DESIGN: JAH
DRAWN: EBW
CHECKED: JAH

ELEVATED ELECTRICAL EQUIPMENT RACK - ATL

CITY OF ST. PETE BEACH
PUMP & LIFT STATION REHABILITATIONS
PID# PS26-401-608-00
PINELLAS COUNY FLORIDA

DATE:
APRIL 2026

PROJECT NO.
148404108

SHEET NUMBER
E-23

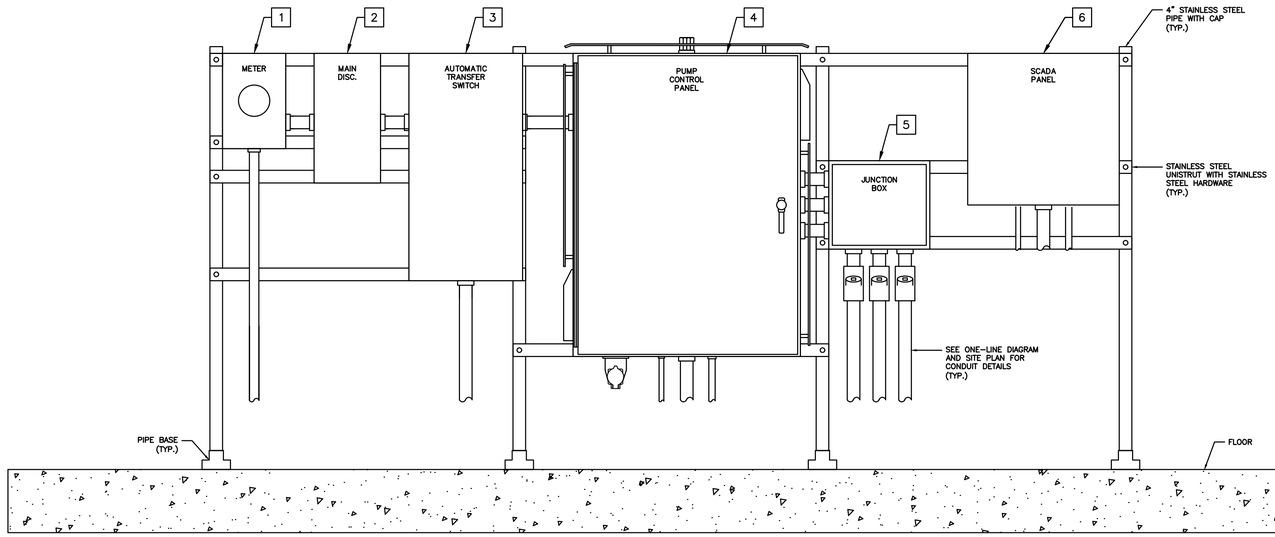

A ELEVATED ELECTRICAL EQUIPMENT RACK ELEVATION - VFD

SCALE: NO SCALE

GENERAL NOTES:

1. INSTALL CONDUITS AND CONDUCTORS FOR SERVICE AND EQUIPMENT GROUND AS REUQIRED BY APPLICABLE CODES AND SPECIFICATIONS.
2. REUSE EXISTING CONDUIT TO THE FULLEST EXTENT POSSIBLE.
3. CONDUITS SHOWN ARE REPRESENTATIVE ONLY. CONTRACTOR SHALL DETERMINE CONDUIT LOCATION AND ROUTING.
4. SEE ONE-LINE DIAGRAM ON SHEET E-05 FOR ADDITIONAL CONDUIT AND WIRING.

KEY NOTES:

1 ELECTRIC METER IN ALUMINUM ENCLOSURE. COORDINATE ELECTRIC METER INSTALLATION WITH ALL UTILITY REQUIREMENTS.

2 HEAVY DUTY, PAD-LOCKABLE, 200A-240V-3P NEMA 4X STAINLESS STEEL FUSIBLE DISCONNECT, SERVICE ENTRANCE RATED. FUSES SHALL BE 240V, 125A, DUAL-ELEMENT, TIME-DELAY RK5 FUSES.

3 ASCO 300 SERIES 150A-240V-3P NEMA 4X STAINLESS STEEL AUTOMATIC TRANSFER SWITCH.

4 SEE SHEETS E-30 THROUGH E-34 FOR PUMP CONTROL PANEL LAYOUT AND WIRING DIAGRAMS.

5 PROVIDE TERMINALS AS REQUIRED IN JUNCTION BOX FOR PUMP CABLES AND FLOAT SWITCH CABLES.

6 CITY PROVIDED AND INSTALLED SCADA PANEL AND ANTENNA. COORDINATE REPLACEMENT WITH THE CITY.

No.	Revisions	Date	By

Kimley»Horn
© 2025 KIMLEY-HORN AND ASSOCIATES, INC.
200 CENTRAL AVENUE, SUITE 600
ST. PETERSBURG, FL 33701
P. 727 547 3999
WWW.KIMLEY-HORN.COM REGISTRY NO. 35106

DESIGN ENGINEER: JASON A. HOYT, P.E.
FL LICENSE NUMBER 101453
DATE:

SCALE: AS NOTED
DESIGN: JAH
DRAWN: EBW
CHECKED: JAH

ELEVATED ELECTRICAL EQUIPMENT RACK - VFD

CITY OF ST. PETE BEACH
PUMP & LIFT STATION REHABILITATIONS
PID# PS26-401-608-00
PINELLAS COUNY FLORIDA

DATE: APRIL 2026

PROJECT NO. 148404108

SHEET NUMBER E-24

GENERAL NOTES:

1. INSTALL CONDUITS AND CONDUCTORS FOR SERVICE AND EQUIPMENT GROUND AS REUQIRED BY APPLICABLE CODES AND SPECIFICATIONS.
2. REUSE EXISTING CONDUIT TO THE FULLEST EXTENT POSSIBLE.
3. CONDUITS SHOWN ARE REPRESENTATIVE ONLY. CONTRACTOR SHALL DETERMINE CONDUIT LOCATION AND ROUTING.
4. SEE ONE-LINE DIAGRAM ON SHEET E-17 FOR ADDITIONAL CONDUIT AND WIRING.

KEY NOTES:

1 REPLACE EXISTING PUMP CONTROL PANEL. SEE SHEETS E-35 THROUGH E-39 FOR PUMP CONTROL PANEL LAYOUT AND WIRING DIAGRAMS.

2 CITY PROVIDED AND INSTALLED SCADA PANEL AND ANTENNA. COORDINATE REPLACEMENT WITH THE CITY.

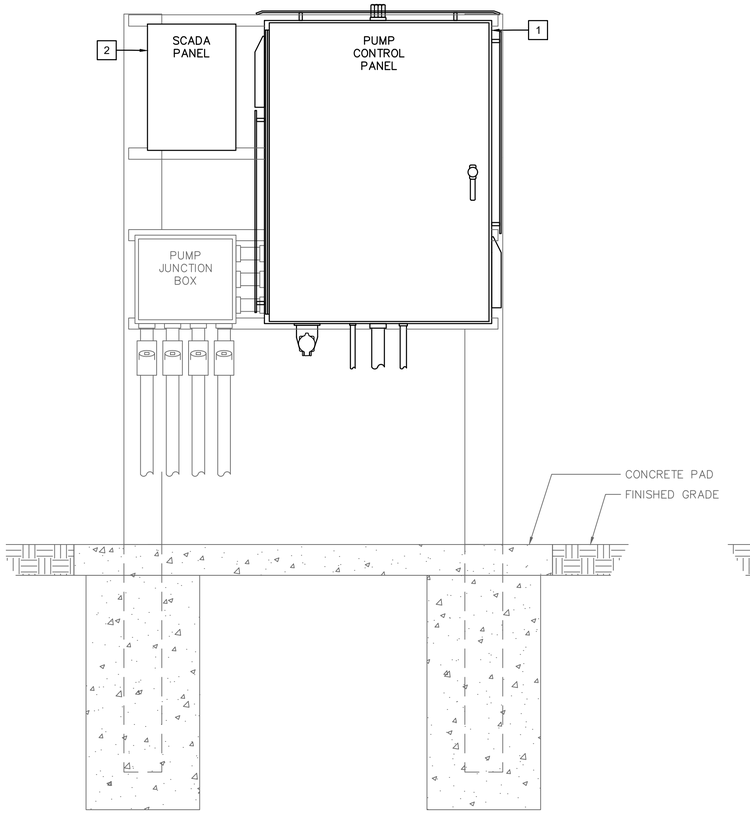

A ELECTRICAL EQUIPMENT RACK – RVSS FRONT ELEVATION
SCALE: NO SCALE

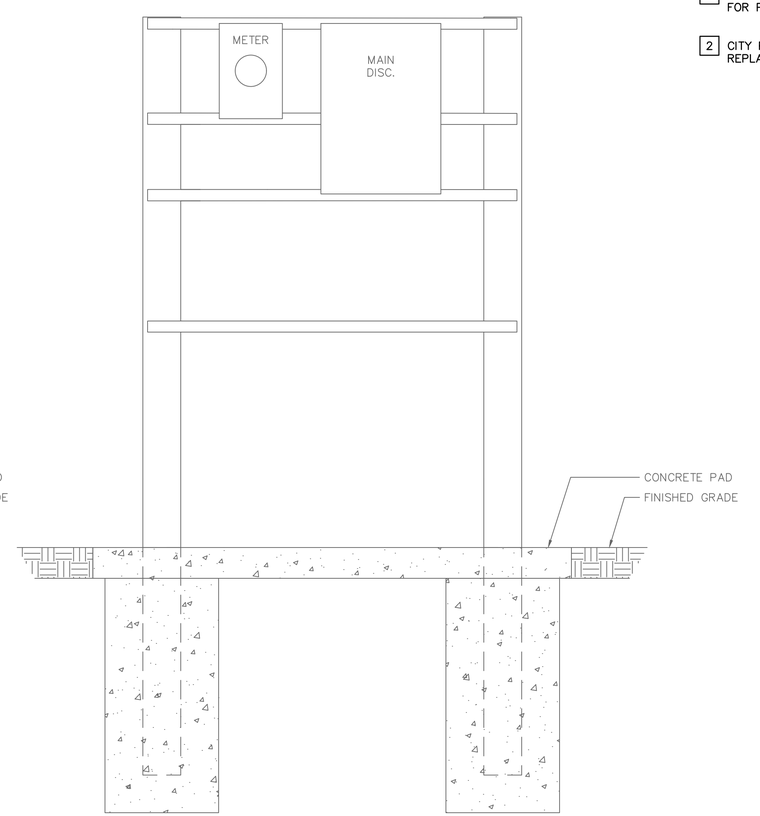

B ELECTRICAL EQUIPMENT RACK – RVSS REAR ELEVATION
SCALE: NO SCALE

No.	Revisions	Date	By

Kimley»Horn
© 2025 KIMLEY-HORN AND ASSOCIATES, INC.
200 CENTRAL AVENUE, SUITE 600
ST. PETERSBURG, FL 33701
P. 727 547 3999
WWW.KIMLEY-HORN.COM REGISTRY NO. 35106

DESIGN ENGINEER: JASON A. HOYT, P.E.
FL LICENSE NUMBER 101453
DATE:

SCALE: AS NOTED
DESIGN: JAH
DRAWN: EBW
CHECKED: JAH

ELECTRICAL EQUIPMENT RACK - RVSS

CITY OF ST. PETE BEACH
PUMP & LIFT STATION REHABILITATIONS
PID# PS26-401-608-00
PINELLAS COUNY FLORIDA

DATE: APRIL 2026

PROJECT NO. 148404108

SHEET NUMBER E-25

GENERAL NOTES:

1. PROVIDE GENERATOR AUXILIARY POWER RECEPTACLE AND SITE LIGHT WIRING ONLY FOR LIFT STATION 4.

KEY NOTES:

1 PROVIDE 36" X 30" X 12", 316 STAINLESS STEEL ENCLOSURE WITH PAD-LOCKABLE 3-POINT LATCH.

2 PROVIDE NEMA 4X RED ALARM LIGHT.

3 PROVIDE EMERGENCY GENERATOR RECEPTACLE. COORDINATE REQUIREMENTS WITH THE CITY. GENERATOR RECEPTACLE SHALL BE INSTALLED OPPOSITE OF JUNCTION BOX; UNLESS ON ELEVATED PLATFORM, THEN SHALL BE INSTALLED ON THE BOTTOM OF THE PUMP CONTROL PANEL.

4 PROVIDE SWING-OUT PANEL AND DOOR STOP KIT.

5 ALL CIRCUIT BREAKERS SHALL BE ACCESSIBLE THROUGH THE SWING-OUT.

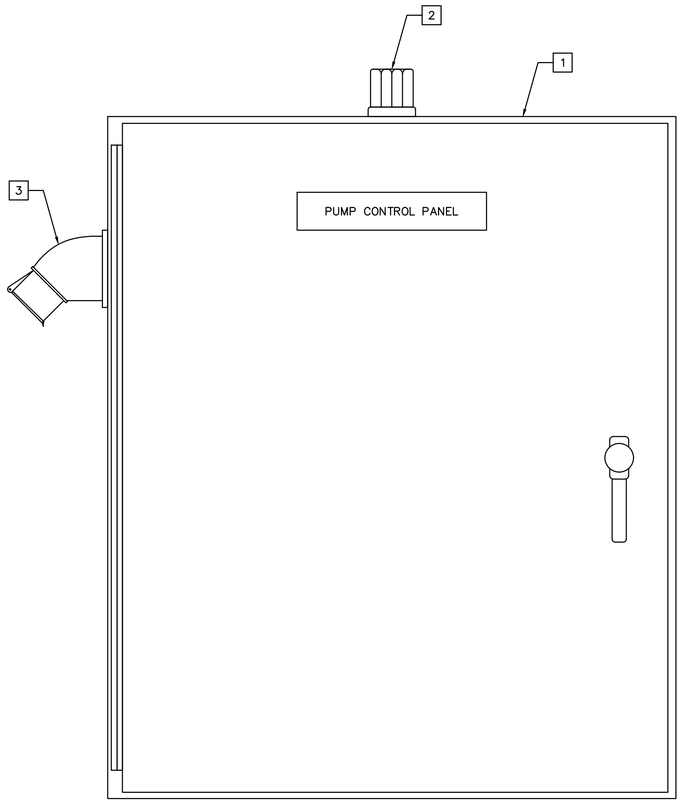

A PUMP CONTROL PANEL
PANEL LAYOUT
SCALE: NO SCALE

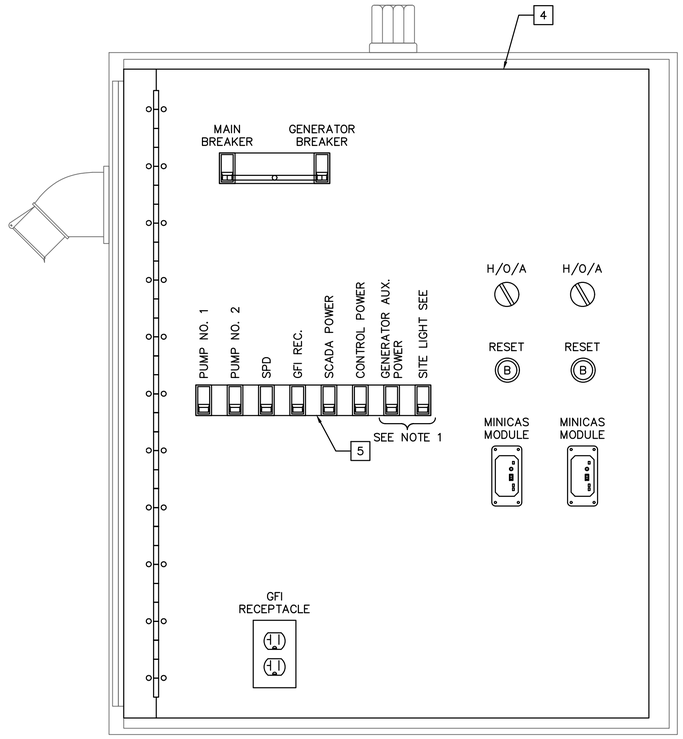

B PUMP CONTROL PANEL
SWING-OUT LAYOUT
SCALE: NO SCALE

No.	Revisions	Date	By

Kimley»Horn

© 2025 KIMLEY-HORN AND ASSOCIATES, INC.
200 CENTRAL AVENUE, SUITE 600
ST. PETERSBURG, FL 33701
P. 727 547 3999
WWW.KIMLEY-HORN.COM REGISTRY NO. 35106

DESIGN ENGINEER:
JASON A. HOYT, P.E.
FL LICENSE NUMBER
101453
DATE:

SCALE: AS NOTED
DESIGN: JAH
DRAWN: EBW
CHECKED: JAH

PUMP CONTROL PANEL LAYOUT - ATL

CITY OF ST. PETE BEACH
PUMP & LIFT STATION REHABILITATIONS
PID# PS26-401-608-00
PINELLAS COUNY FLORIDA

DATE:
APRIL 2026

PROJECT NO.
148404108

SHEET NUMBER
E-26

GENERAL NOTES:

1. OVERLOAD RELAYS SHALL BE ELECTRONIC TYPE, CAPABLE OF BEING RESET USING A REMOTE DRY CONTACT.

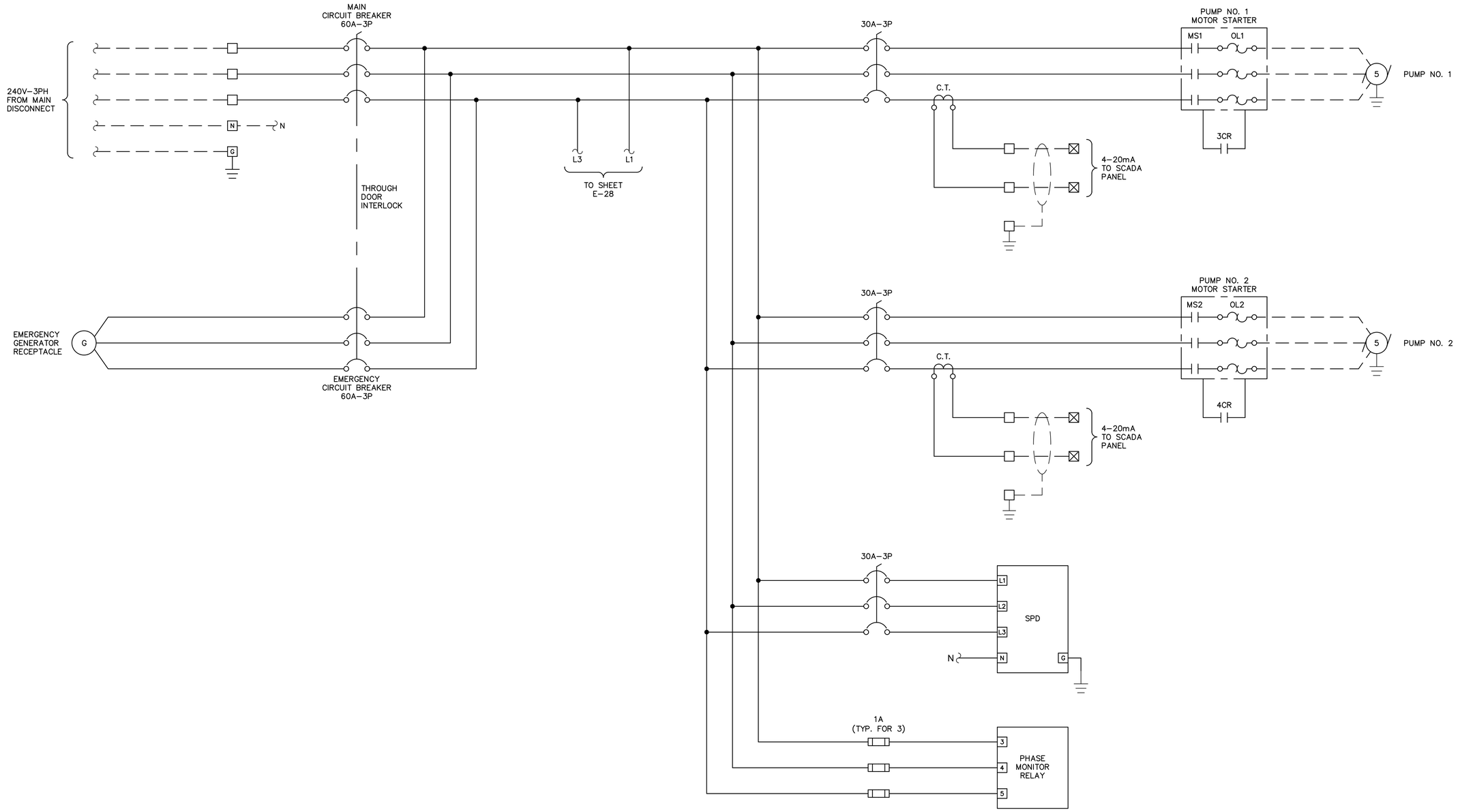

No.	Revisions	Date	By

Kimley»Horn
© 2025 KIMLEY-HORN AND ASSOCIATES, INC.
200 CENTRAL AVENUE, SUITE 600
ST. PETERSBURG, FL 33701
P. 727 547 3999
WWW.KIMLEY-HORN.COM REGISTRY NO. 35106

DESIGN ENGINEER: JASON A. HOYT, P.E.
FL LICENSE NUMBER 101453
DATE:

SCALE: AS NOTED
DESIGN: JAH
DRAWN: EBW
CHECKED: JAH

PUMP CONTROL PANEL WIRING DIAGRAM - ATL

CITY OF ST. PETE BEACH
PUMP & LIFT STATION REHABILITATIONS
PID# PS26-401-608-00
PINELLAS COUNY FLORIDA

DATE:
APRIL 2026

PROJECT NO.
148404108

SHEET NUMBER
E-27

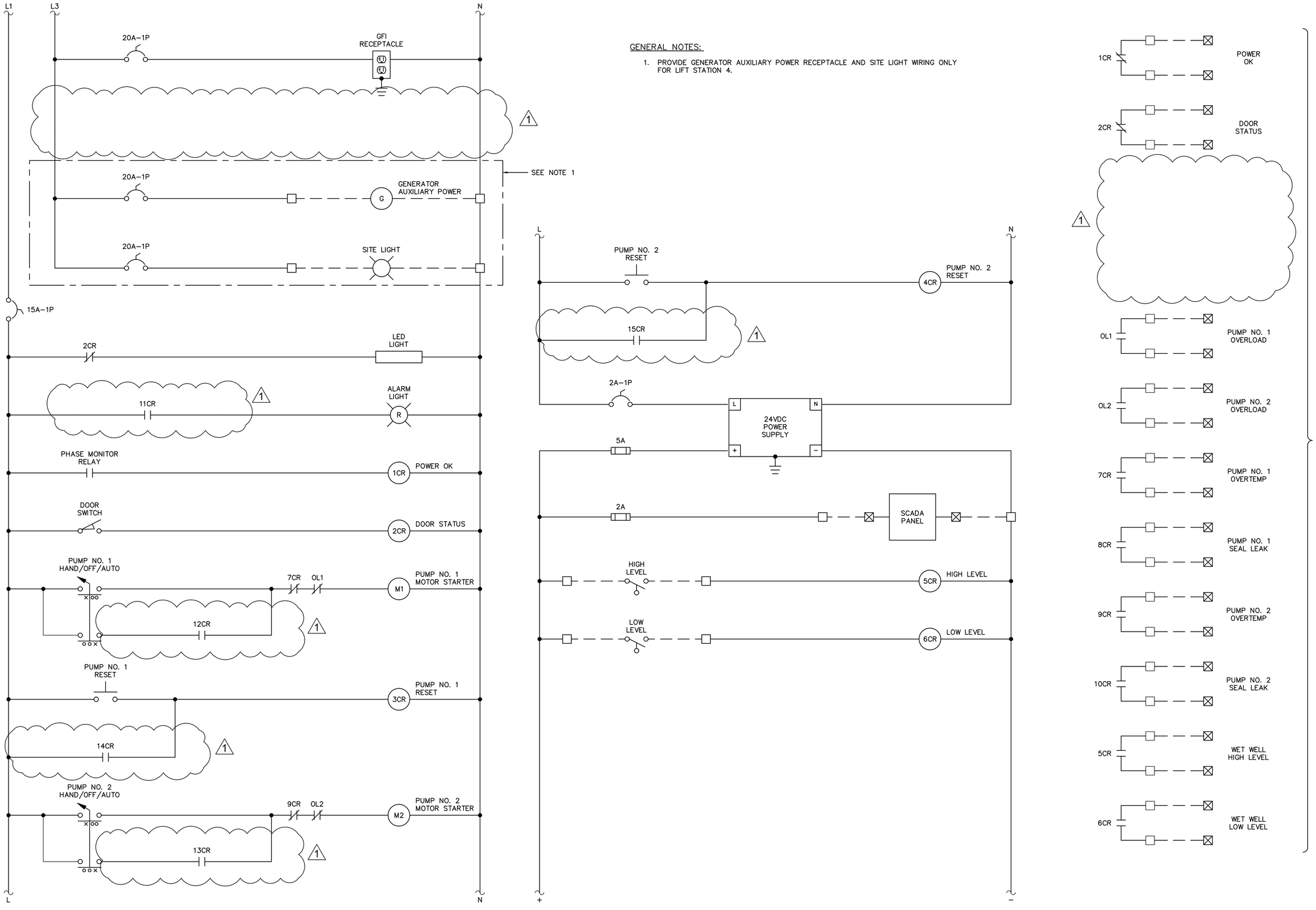

GENERAL NOTES:

1. PROVIDE GENERATOR AUXILIARY POWER RECEPTACLE AND SITE LIGHT WIRING ONLY FOR LIFT STATION 4.

No.	Revisions	Date	By
1	BID ADDENDUM #5	4/16/2026	JAH

Kimley»Horn
© 2025 KIMLEY-HORN AND ASSOCIATES, INC.
200 CENTRAL AVENUE, SUITE 600
ST. PETERSBURG, FL 33701
P: 727 547 3999
WWW.KIMLEY-HORN.COM REGISTRY NO. 35106

DESIGN ENGINEER: JASON A. HOYT, P.E.
FL LICENSE NUMBER 101453
DATE:

SCALE: AS NOTED
DESIGN: JAH
DRAWN: EBW
CHECKED: JAH

PUMP CONTROL PANEL WIRING DIAGRAM - ATL

CITY OF ST. PETE BEACH
PUMP & LIFT STATION REHABILITATIONS
PID# PS26-401-608-00
PINELLAS COUNY FLORIDA

DATE: APRIL 2026

PROJECT NO. 148404108

SHEET NUMBER E-28

No.	Revisions	Date	By
1	BID ADDENDUM #5	4/16/2026	JAH

Kimley»Horn

© 2025 KIMLEY-HORN AND ASSOCIATES, INC.
200 CENTRAL AVENUE, SUITE 600
ST. PETERSBURG, FL 33701
P. 727 547 3999
WWW.KIMLEY-HORN.COM REGISTRY NO. 35106

DESIGN ENGINEER:
JASON A. HOYT, P.E.
FL LICENSE NUMBER
101453
DATE:

SCALE: AS NOTED
DESIGN: JAH
DRAWN: EBW
CHECKED: JAH

PUMP CONTROL PANEL WIRING
DIAGRAM - ATL

CITY OF ST. PETE BEACH
PUMP & LIFT STATION
REHABILITATIONS
PID# PS26-401-608-00
PINELLAS COUNY FLORIDA

DATE:
APRIL 2026

PROJECT NO.
148404108

SHEET NUMBER
E-29

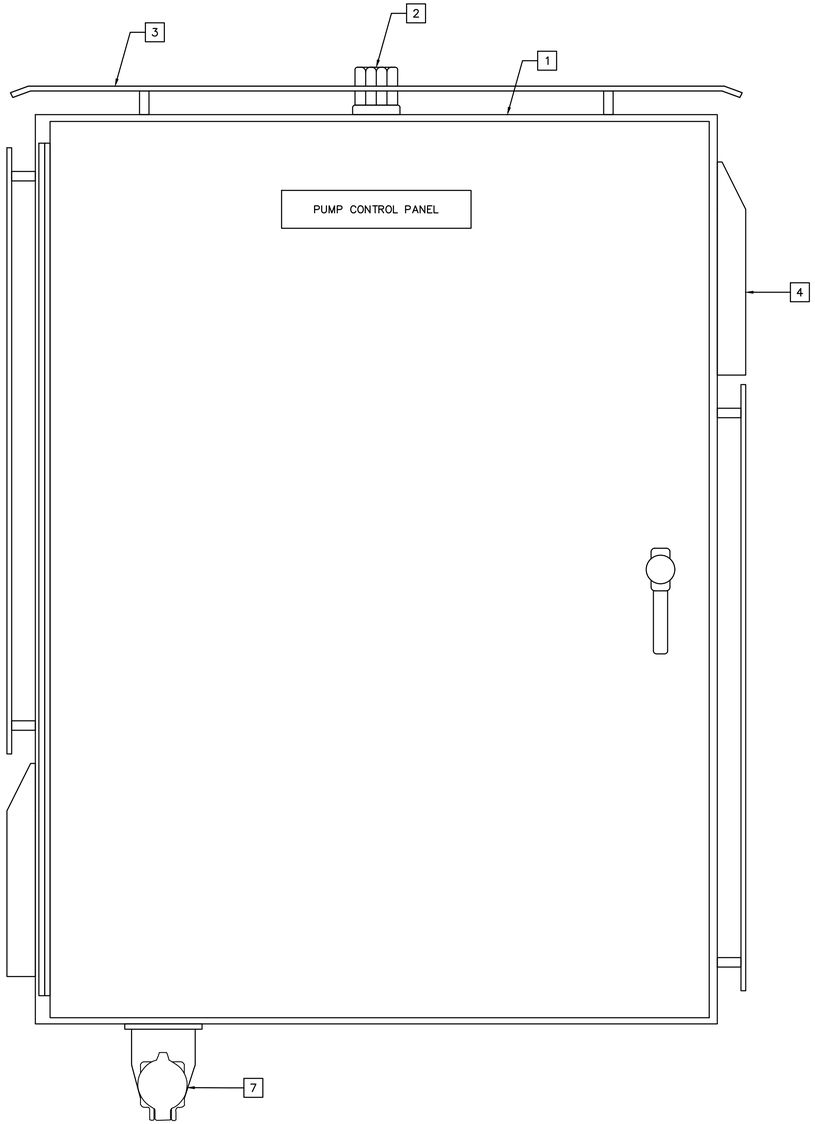

PUMP CONTROL PANEL
PANEL LAYOUT
A
SCALE: NO SCALE

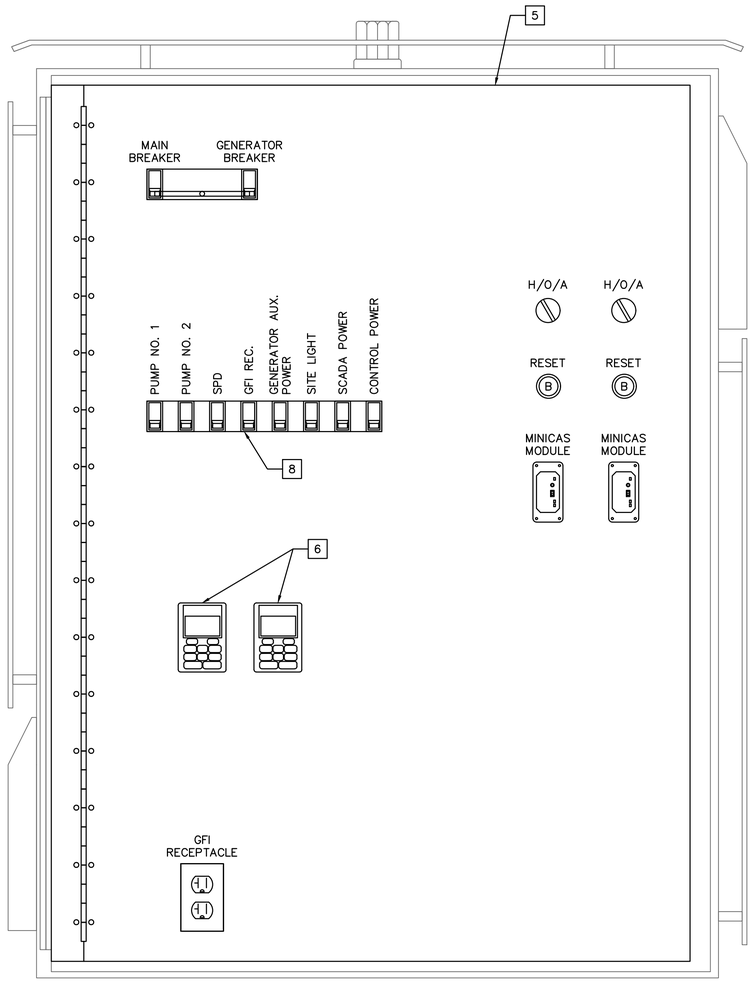

PUMP CONTROL PANEL
SWING–OUT LAYOUT
B
SCALE: NO SCALE

KEY NOTES:

1. PROVIDE 48" X 36" X 12", 316 STAINLESS STEEL ENCLOSURE WITH PAD–LOCKABLE 3–POINT LATCH.
2. PROVIDE NEMA 4X RED ALARM LIGHT.
3. PROVIDE STAINLESS STEEL SUN–SHIELDS ON THE TOP AND SIDES OF THE ENCLOSURE. ATTACH SUN–SHIELDS WITH STAINLESS STEEL HARDWARE.
4. PROVIDE ENCLOSURE COOLING FANS WITH STAINLESS STEEL SHROUDS. SIZE ENCLOSURE COOLING FANS TO ADEQUATELY DISSIPATE HEAT.
5. PROVIDE SWING–OUT PANEL AND DOOR STOP KIT.
6. PROVIDE VARIABLE FREQUENCY DRIVE REMOTE KEYPAD.
7. PROVIDE EMERGENCY GENERATOR RECEPTACLE. COORDINATE REQUIREMENTS WITH THE CITY.
8. ALL CIRCUIT BREAKERS SHALL BE ACCESSIBLE THROUGH THE SWING–OUT.

No.	Revisions	Date	By

Kimley»Horn

© 2025 KIMLEY-HORN AND ASSOCIATES, INC.
200 CENTRAL AVENUE, SUITE 600
ST. PETERSBURG, FL 33701
P. 727 547 3999
WWW.KIMLEY-HORN.COM REGISTRY NO. 35106

DESIGN ENGINEER: JASON A. HOYT, P.E.
FL LICENSE NUMBER 101453
DATE:

SCALE: AS NOTED
DESIGN: JAH
DRAWN: EBW
CHECKED: JAH

PUMP CONTROL PANEL LAYOUT - VFD

CITY OF ST. PETE BEACH
PUMP & LIFT STATION REHABILITATIONS
PID# PS26-401-608-00
PINELLAS COUNY FLORIDA

DATE: APRIL 2026

PROJECT NO. 148404108

SHEET NUMBER E-30

GENERAL NOTES:

1. SEE ONE-LINE DIAGRAMS FOR PUMP AND BREAKER SIZES.

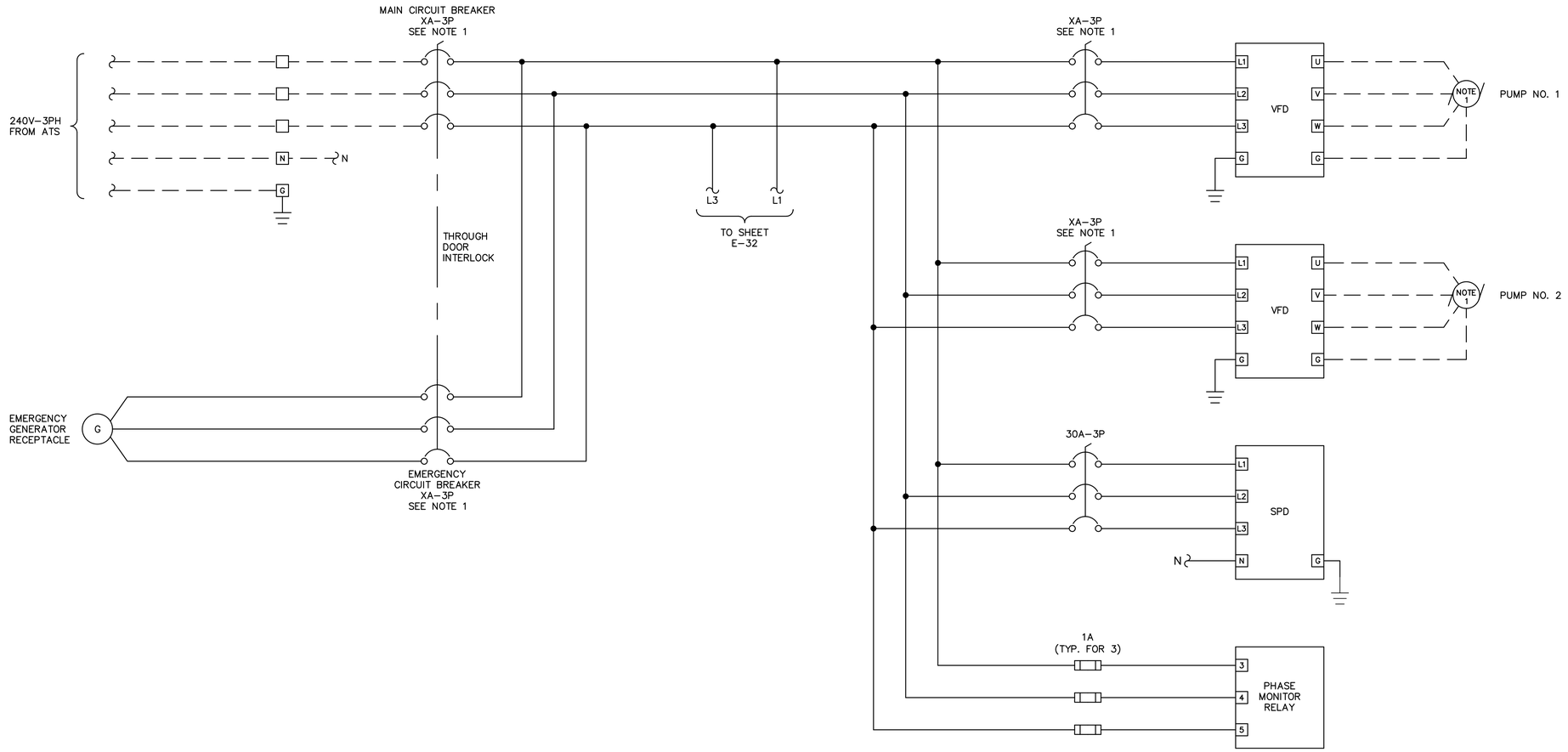

Kimley»Horn

© 2025 KIMLEY-HORN AND ASSOCIATES, INC.
200 CENTRAL AVENUE, SUITE 600
ST. PETERSBURG, FL 33701
P. 727 547 3999
WWW.KIMLEY-HORN.COM REGISTRY NO. 35106

No.	Revisions	Date	By

DESIGN ENGINEER:
JASON A. HOYT, P.E.
FL LICENSE NUMBER
101453
DATE:

SCALE: AS NOTED
DESIGN: JAH
DRAWN: EBW
CHECKED: JAH

PUMP CONTROL PANEL WIRING
DIAGRAM - VFD

CITY OF ST. PETE BEACH
PUMP & LIFT STATION
REHABILITATIONS
PID# PS26-401-608-00
PINELLAS COUNY
FLORIDA

DATE:
APRIL 2026

PROJECT NO.
148404108

SHEET NUMBER
E-31

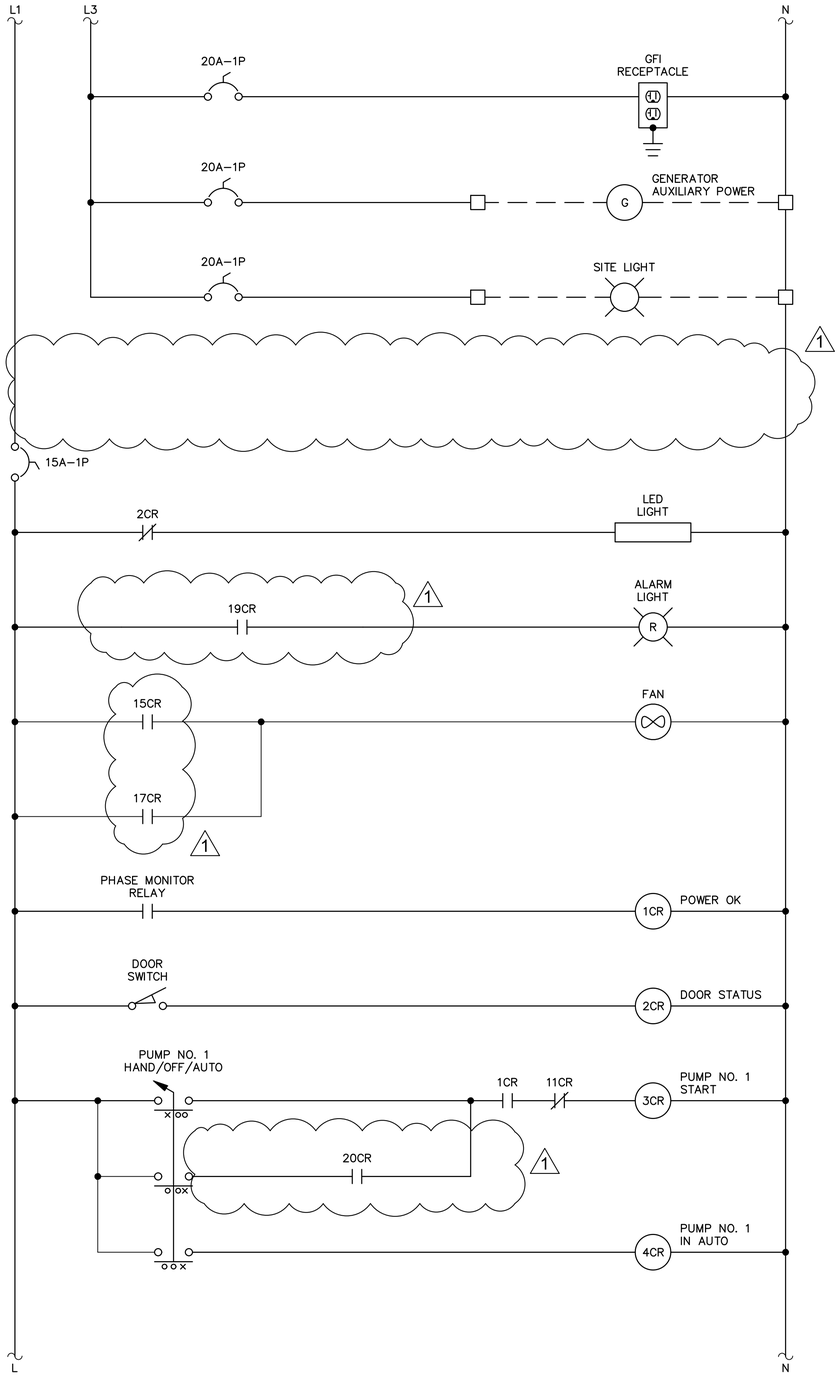

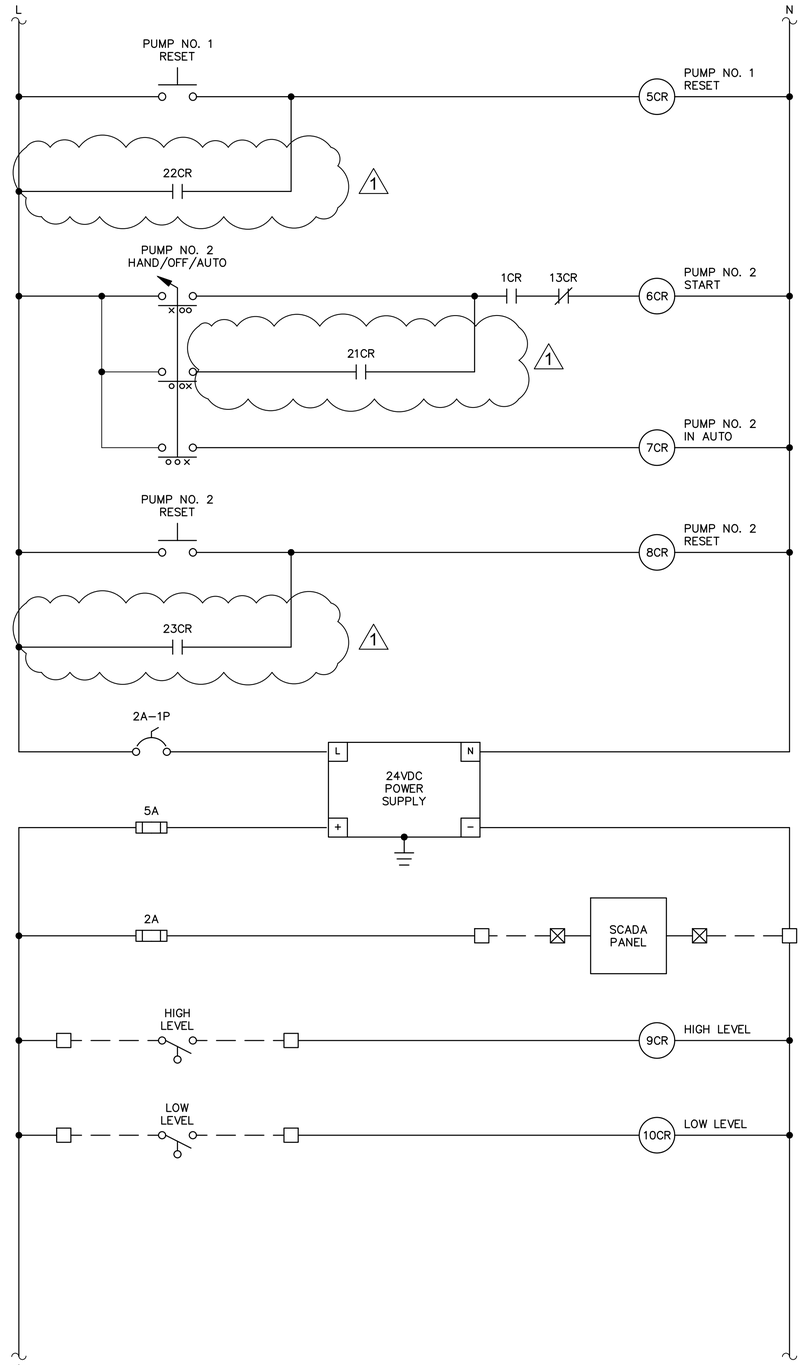

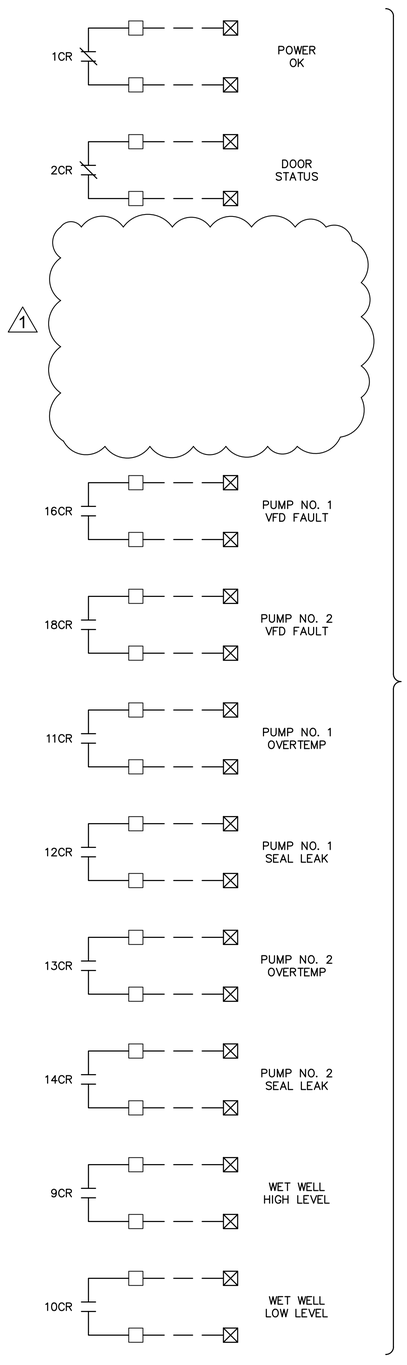

No.	Revisions	Date	By
1	BID ADDENDUM #5	4/16/2026	JAH

Kimley»Horn

© 2025 KIMLEY-HORN AND ASSOCIATES, INC.

200 CENTRAL AVENUE, SUITE 600
ST. PETERSBURG, FL 33701
P. 727 547 3999
WWW.KIMLEY-HORN.COM REGISTRY NO. 35106

DESIGN ENGINEER:
JASON A. HOYT, P.E.
FL LICENSE NUMBER
101453
DATE:

SCALE: AS NOTED
DESIGN: JAH
DRAWN: EBW
CHECKED: JAH

PUMP CONTROL PANEL WIRING DIAGRAM - VFD

CITY OF ST. PETE BEACH
PUMP & LIFT STATION REHABILITATIONS
PID# PS26-401-608-00
PINELLAS COUNY FLORIDA

DATE:
APRIL 2026

PROJECT NO.
148404108

SHEET NUMBER
E-32

No.	Revisions	Date	By
1	BID ADDENDUM #5	4/16/2026	JAH

Kimley»Horn

© 2025 KIMLEY-HORN AND ASSOCIATES, INC.
200 CENTRAL AVENUE, SUITE 600
ST. PETERSBURG, FL 33701
P. 727 547 3999
WWW.KIMLEY-HORN.COM REGISTRY NO. 35106

DESIGN ENGINEER:
JASON A. HOYT, P.E.
FL LICENSE NUMBER
101453
DATE:

SCALE: AS NOTED
DESIGN: JAH
DRAWN: EBW
CHECKED: JAH

PUMP CONTROL PANEL WIRING
DIAGRAM - VFD

CITY OF ST. PETE BEACH
PUMP & LIFT STATION
REHABILITATIONS
PID# PS26-401-608-00
PINELLAS COUNY FLORIDA

DATE:
APRIL 2026

PROJECT NO.
148404108

SHEET NUMBER
E-33

GENERAL NOTES:

1. VARIABLE FREQUENCY DRIVES SHALL BE YASKAWA IQPUMP1000 WITH CONFORMAL COATED CIRCUIT BOARDS.

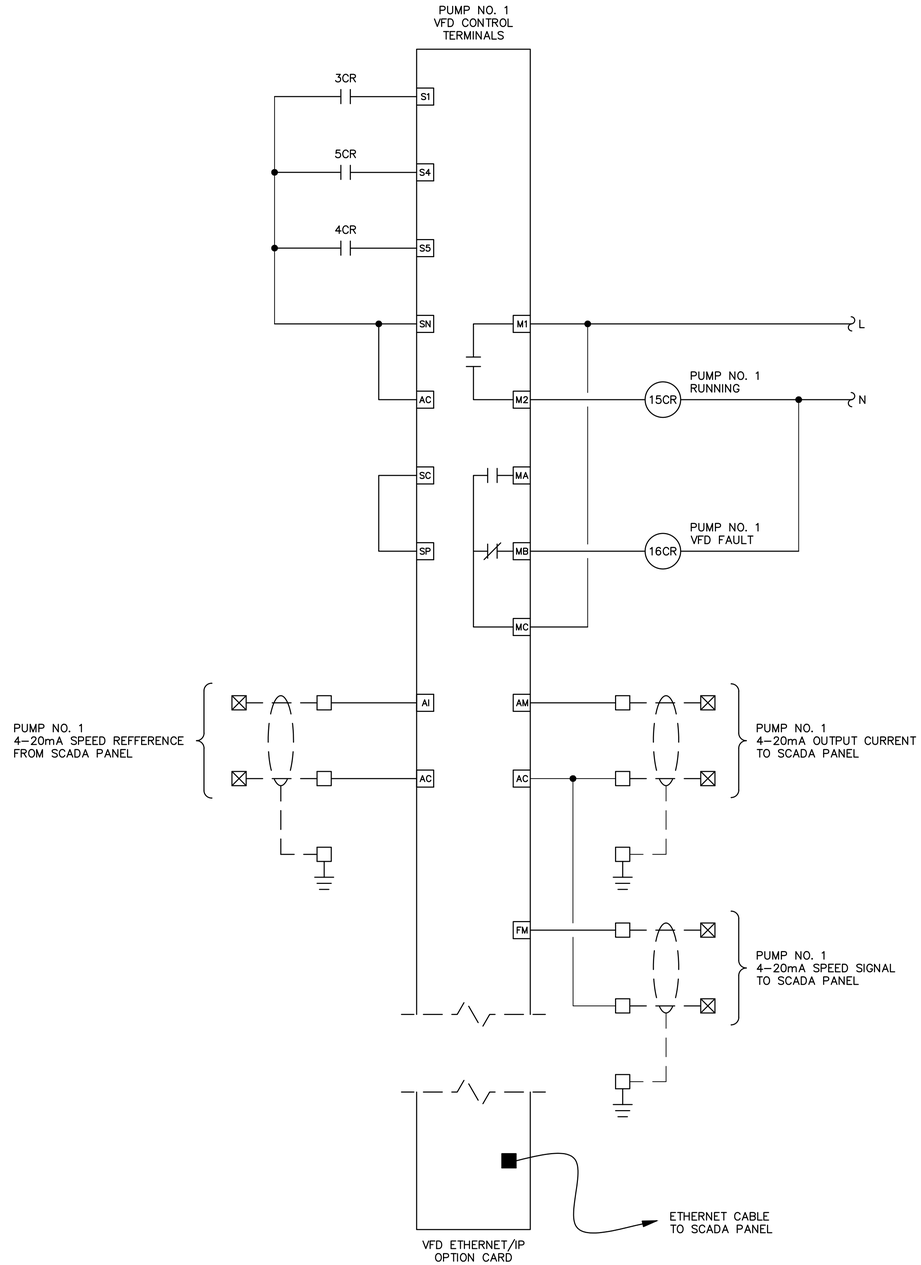

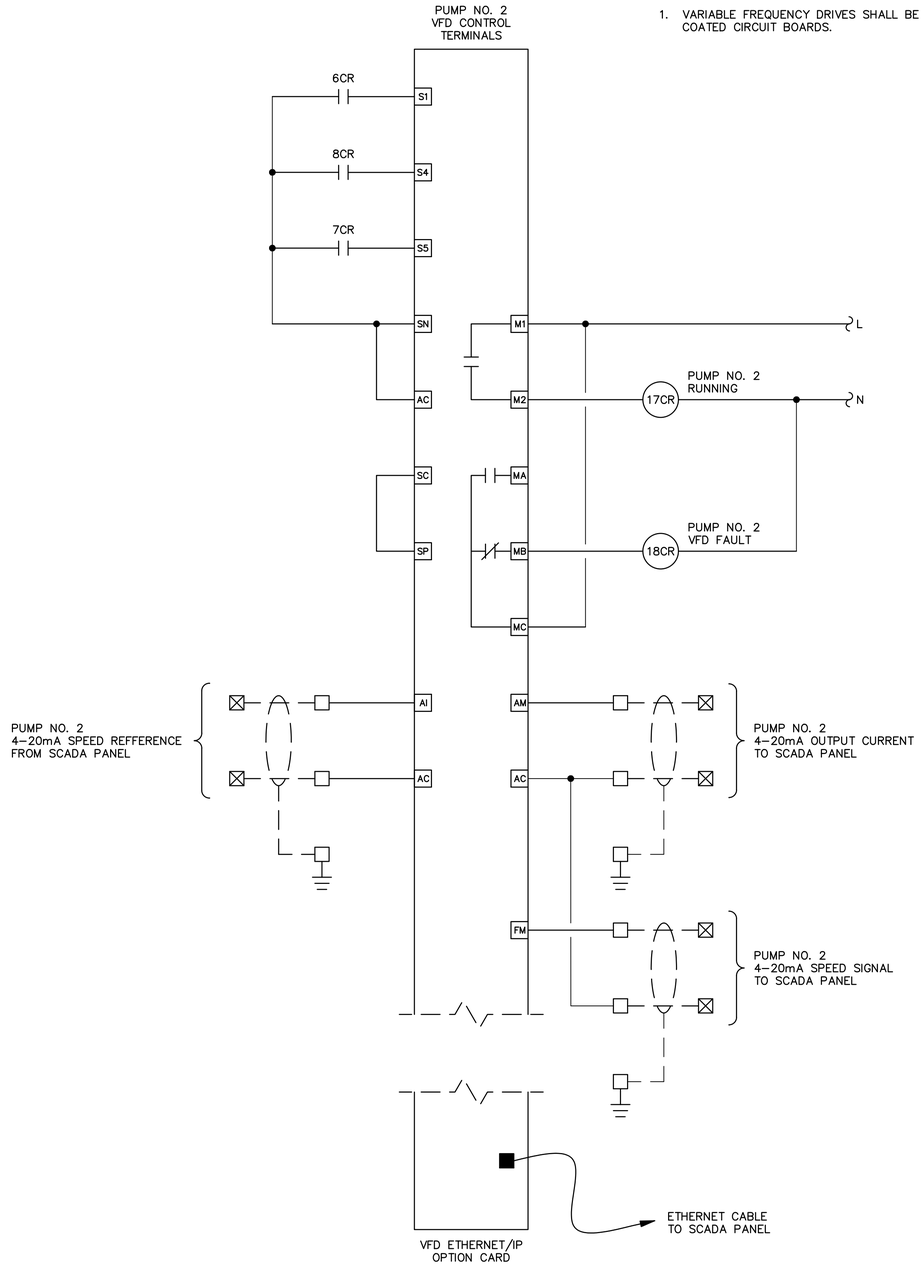

No.	Revisions	Date	By

Kimley»Horn

© 2025 KIMLEY-HORN AND ASSOCIATES, INC.
200 CENTRAL AVENUE, SUITE 600
ST. PETERSBURG, FL 33701
P: 727 547 3999
WWW.KIMLEY-HORN.COM REGISTRY NO. 35106

DESIGN ENGINEER:
JASON A. HOYT, P.E.
FL LICENSE NUMBER
101453
DATE:

SCALE: AS NOTED
DESIGN: JAH
DRAWN: EBW
CHECKED: JAH

PUMP CONTROL PANEL WIRING
DIAGRAM - VFD

CITY OF ST. PETE BEACH
PUMP & LIFT STATION
REHABILITATIONS
PID# PS26-401-608-00

FLORIDA
PINELLAS COUNY

DATE:
APRIL 2026

PROJECT NO.
148404108

SHEET NUMBER
E-34

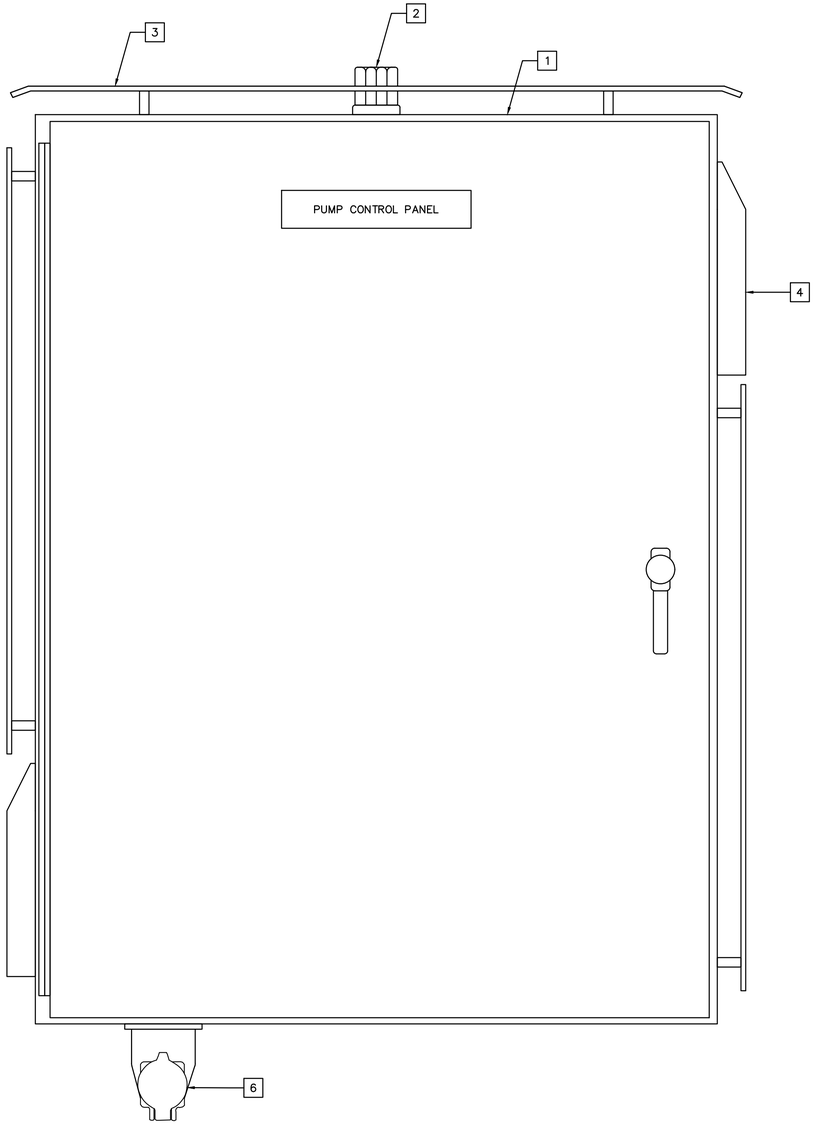

PUMP CONTROL PANEL
PANEL LAYOUT

A SCALE: NO SCALE

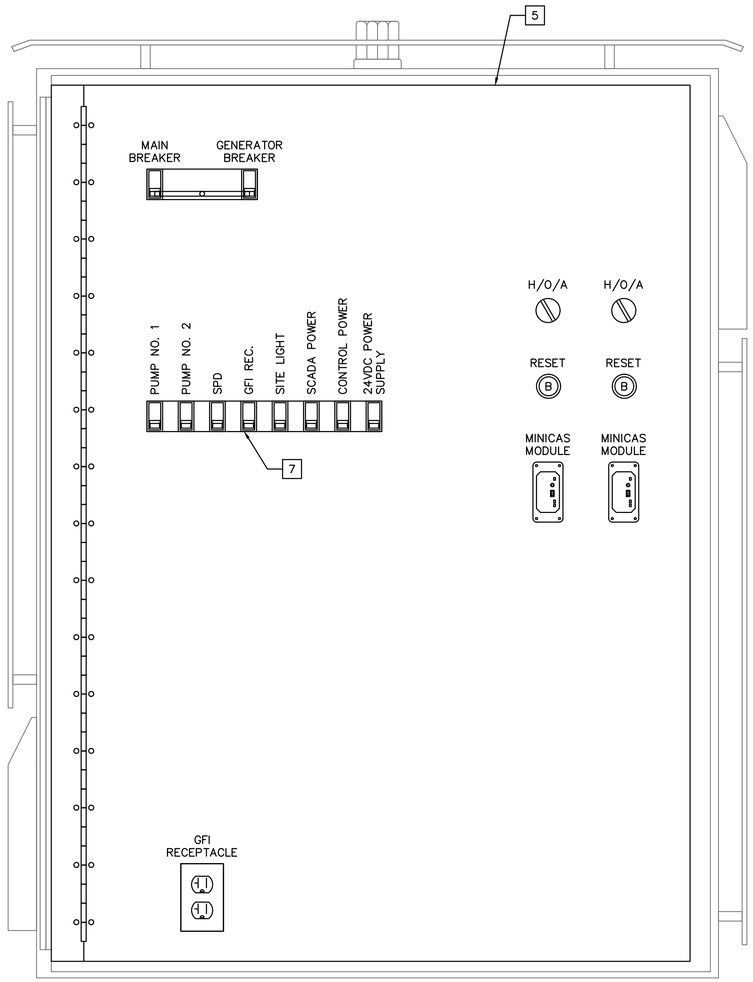

PUMP CONTROL PANEL
SWING–OUT LAYOUT

B SCALE: NO SCALE

KEY NOTES:

1. PROVIDE 48" X 36" X 12", 316 STAINLESS STEEL ENCLOSURE WITH PAD–LOCKABLE 3–POINT LATCH.
2. PROVIDE NEMA 4X RED ALARM LIGHT.
3. PROVIDE STAINLESS STEEL SUN–SHIELDS ON THE TOP AND SIDES OF THE ENCLOSURE. ATTACH SUN–SHIELDS WITH STAINLESS STEEL HARDWARE.
4. PROVIDE ENCLOSURE COOLING FANS WITH STAINLESS STEEL SHROUDS. SIZE ENCLOSURE COOLING FANS TO ADEQUATELY DISSIPATE HEAT.
5. PROVIDE SWING–OUT PANEL AND DOOR STOP KIT.
6. PROVIDE EMERGENCY GENERATOR RECEPTACLE. COORDINATE REQUIREMENTS WITH THE CITY.
7. ALL CIRCUIT BREAKERS SHALL BE ACCESSIBLE THROUGH THE SWING–OUT.

No.	Revisions	Date	By

Kimley»Horn

© 2025 KIMLEY-HORN AND ASSOCIATES, INC.
200 CENTRAL AVENUE, SUITE 600
ST. PETERSBURG, FL 33701
P. 727 547 3999
WWW.KIMLEY-HORN.COM REGISTRY NO. 35106

DESIGN ENGINEER: JASON A. HOYT, P.E.
FL LICENSE NUMBER 101453
DATE:

SCALE: AS NOTED
DESIGN: JAH
DRAWN: EBW
CHECKED: JAH

PUMP CONTROL PANEL LAYOUT - RVSS

CITY OF ST. PETE BEACH
PUMP & LIFT STATION REHABILITATIONS
PID# PS26-401-608-00
PINELLAS COUNY FLORIDA

DATE: APRIL 2026

PROJECT NO. 148404108

SHEET NUMBER E-35

No.	Revisions	Date	By
1	BID ADDENDUM #5	4/16/2026	JAH

Kimley»Horn

© 2025 KIMLEY-HORN AND ASSOCIATES, INC.
200 CENTRAL AVENUE, SUITE 600
ST. PETERSBURG, FL 33701
P. 727 547 3999
WWW.KIMLEY-HORN.COM REGISTRY NO. 35106

DESIGN ENGINEER:
JASON A. HOYT, P.E.
FL LICENSE NUMBER
101453
DATE:

SCALE:	AS NOTED	DESIGN:	JAH	DRAWN:	EBW	CHECKED:	JAH

PUMP CONTROL PANEL WIRING
DIAGRAM - RVSS

CITY OF ST. PETE BEACH
PUMP & LIFT STATION
REHABILITATIONS
PID# PS26-401-608-00

PINELLAS COUNY FLORIDA

DATE:
APRIL 2026

PROJECT NO.
148404108

SHEET NUMBER
E-36

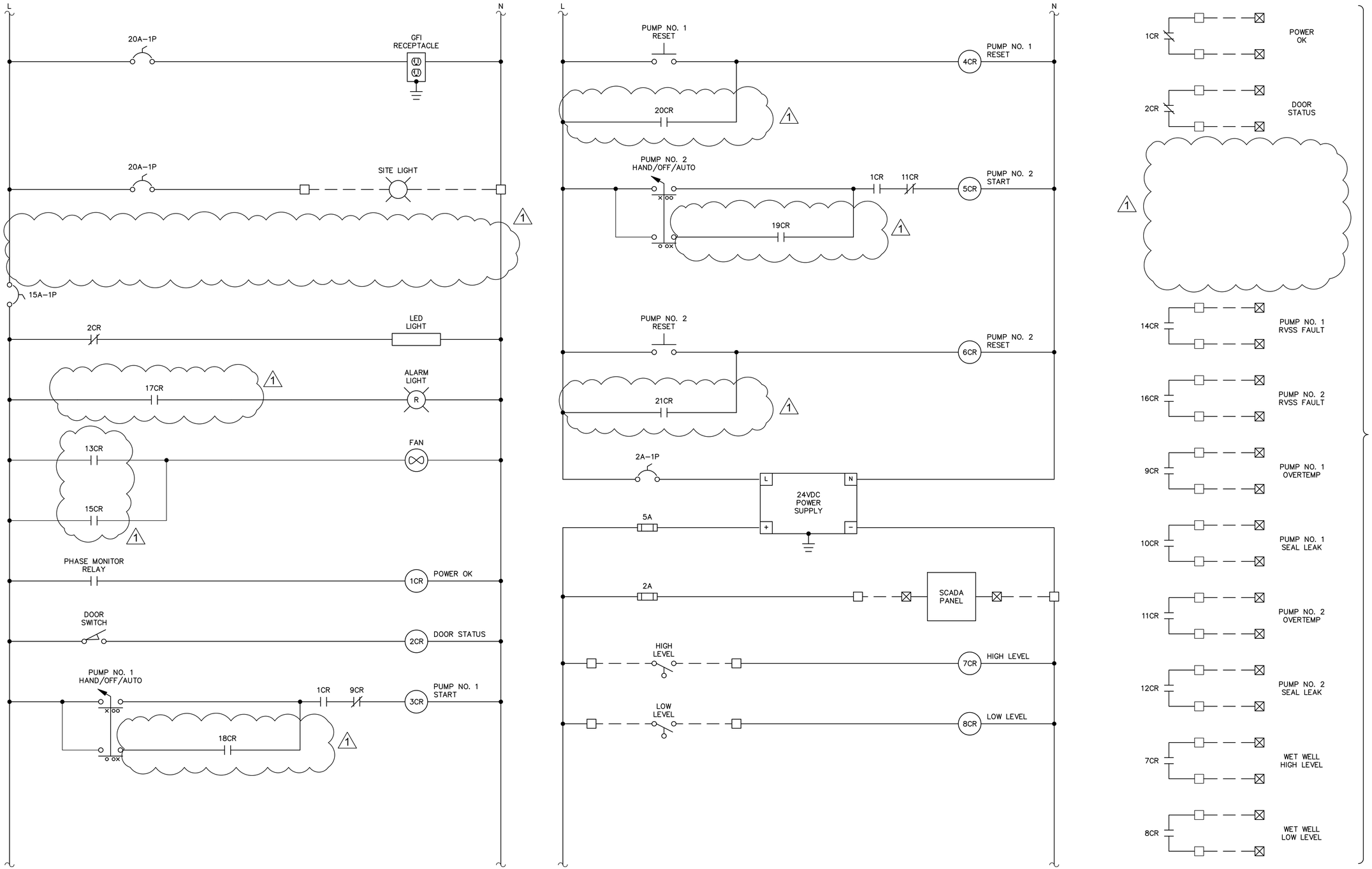

No.	Revisions	Date	By
1	BID ADDENDUM #5	4/16/2026	JAH

Kimley»Horn
© 2025 KIMLEY-HORN AND ASSOCIATES, INC.
200 CENTRAL AVENUE, SUITE 600
ST. PETERSBURG, FL 33701
P. 727 547 3999
WWW.KIMLEY-HORN.COM REGISTRY NO. 35106

DESIGN ENGINEER:
JASON A. HOYT, P.E.
FL LICENSE NUMBER
101453
DATE:

SCALE: AS NOTED
DESIGN: JAH
DRAWN: EBW
CHECKED: JAH

PUMP CONTROL PANEL WIRING DIAGRAM - RVSS

CITY OF ST. PETE BEACH
PUMP & LIFT STATION REHABILITATIONS
PID# PS26-401-608-00
PINELLAS COUNY FLORIDA

DATE:
APRIL 2026

PROJECT NO.
148404108

SHEET NUMBER
E-37

No.	Revisions	Date	By
1	BID ADDENDUM #5	4/16/2026	JAH

Kimley»Horn

© 2025 KIMLEY-HORN AND ASSOCIATES, INC.
200 CENTRAL AVENUE, SUITE 600
ST. PETERSBURG, FL 33701
P. 727 547 3999
WWW.KIMLEY-HORN.COM REGISTRY NO. 35106

DESIGN ENGINEER:
JASON A. HOYT, P.E.
FL LICENSE NUMBER
101453
DATE:

SCALE: AS NOTED
DESIGN: JAH
DRAWN: EBW
CHECKED: JAH

PUMP CONTROL PANEL WIRING
DIAGRAM - RVSS

CITY OF ST. PETE BEACH
PUMP & LIFT STATION
REHABILITATIONS
PID# PS26-401-608-00
PINELLAS COUNY FLORIDA

DATE:
APRIL 2026

PROJECT NO.
148404108

SHEET NUMBER
E-38

GENERAL NOTES:

1. REDUCED VOLTAGE SOFT STARTERS SHALL BE ALLEN BRADLEY SMC-3 WITH CONFORMAL COATED CIRCUIT BOARDS.

No.	Revisions	Date	By

Kimley»Horn

© 2025 KIMLEY-HORN AND ASSOCIATES, INC.

200 CENTRAL AVENUE, SUITE 600
ST. PETERSBURG, FL 33701
P. 727 547 3999
WWW.KIMLEY-HORN.COM REGISTRY NO. 35106

DESIGN ENGINEER:
JASON A. HOYT, P.E.
FL LICENSE NUMBER
101453
DATE:

SCALE: AS NOTED
DESIGN: JAH
DRAWN: EBW
CHECKED: JAH

PUMP CONTROL PANEL WIRING
DIAGRAM - RVSS

CITY OF ST. PETE BEACH
PUMP & LIFT STATION
REHABILITATIONS
PID# PS26-401-608-00
PINELLAS COUNY FLORIDA

DATE:
APRIL 2026

PROJECT NO.
148404108

SHEET NUMBER
E-39

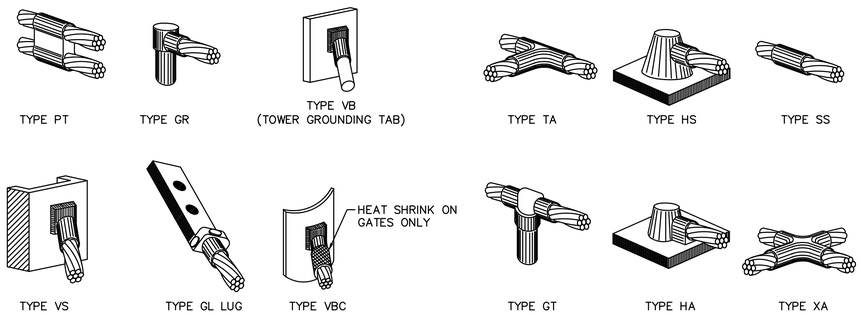

NOTES:

1. CADWELD "TYPES" SHOWN ABOVE ARE EXAMPLES. PROVIDE APPROPRIATE TYPES AS REQUIRED.

A TYPICAL CAD WELD DETAILS
SCALE: NO SCALE

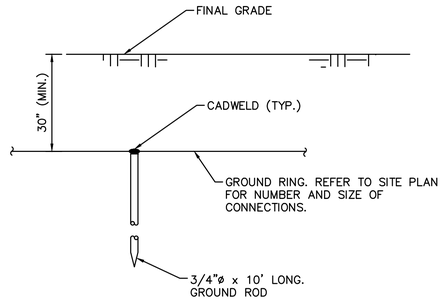

B GROUND ROD DETAIL
SCALE: NO SCALE

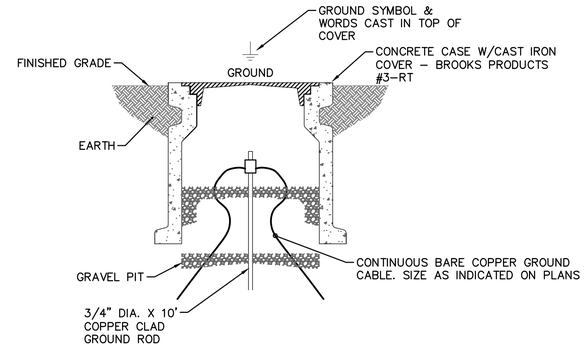

C GROUND TEST WELL DETAIL
SCALE: NO SCALE

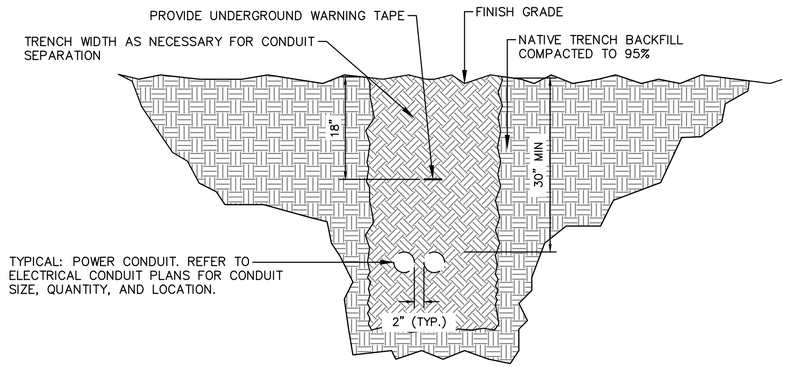

D TRENCH DETAIL
SCALE: NO SCALE

No.	Revisions	Date	By

Kimley»Horn
© 2025 KIMLEY-HORN AND ASSOCIATES, INC.
200 CENTRAL AVENUE, SUITE 600
ST. PETERSBURG, FL 33701
P. 727 547 3999
WWW.KIMLEY-HORN.COM REGISTRY NO. 35106

DESIGN ENGINEER:
JASON A. HOYT, P.E.
FL LICENSE NUMBER
101453
DATE:

SCALE: AS NOTED
DESIGN: JAH
DRAWN: EBW
CHECKED: JAH

ELECTRICAL DETAILS

CITY OF ST. PETE BEACH
PUMP & LIFT STATION
REHABILITATIONS
PID# PS26-401-608-00
PINELLAS COUNY FLORIDA

DATE:
APRIL 2026

PROJECT NO.
148404108

SHEET NUMBER
E-40

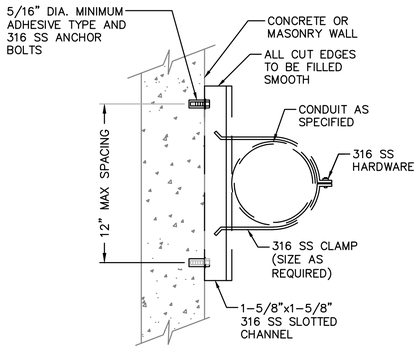

NOTES:

1. CONTRACTOR WILL BE RESPONSIBLE FOR PROVIDING THE CORRECT SIZE ANCHOR BOLTS BASED ON LOAD.
2. FOR SINGLE CONDUITS 2" AND LARGER, USE SLOTTED CHANNEL AND ADHESIVE ANCHORS AS SHOWN.
3. FOR SINGLE CONDUITS 1-1/2" AND SMALLER, SLOTTED CHANNEL MAY BE OMITTED AND USE OF NON-ADHESIVE ANCHORS ARE PERMITTED.

A WALL CONDUIT INSTALLATION DETAIL

SCALE: NO SCALE

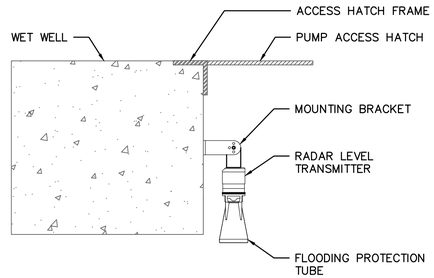

B RADAR LEVEL TRANSMITTER INSTALLATION DETAIL

SCALE: NO SCALE

No.	Revisions	Date	By

Kimley»Horn

© 2025 KIMLEY-HORN AND ASSOCIATES, INC.
200 CENTRAL AVENUE, SUITE 600
ST. PETERSBURG, FL 33701
P. 727 547 3999
WWW.KIMLEY-HORN.COM REGISTRY NO. 35106

DESIGN ENGINEER: JASON A. HOYT, P.E.
FL LICENSE NUMBER 101453
DATE:

SCALE: AS NOTED
DESIGN: JAH
DRAWN: EBW
CHECKED: JAH

ELECTRICAL DETAILS

CITY OF ST. PETE BEACH
PUMP & LIFT STATION REHABILITATIONS
PID# PS26-401-608-00
PINELLAS COUNY FLORIDA

DATE: APRIL 2026

PROJECT NO. 148404108

SHEET NUMBER E-41

5. Added Flow Meter Replacement Sheets for Pump Stations 2 and 3 (behind this page)

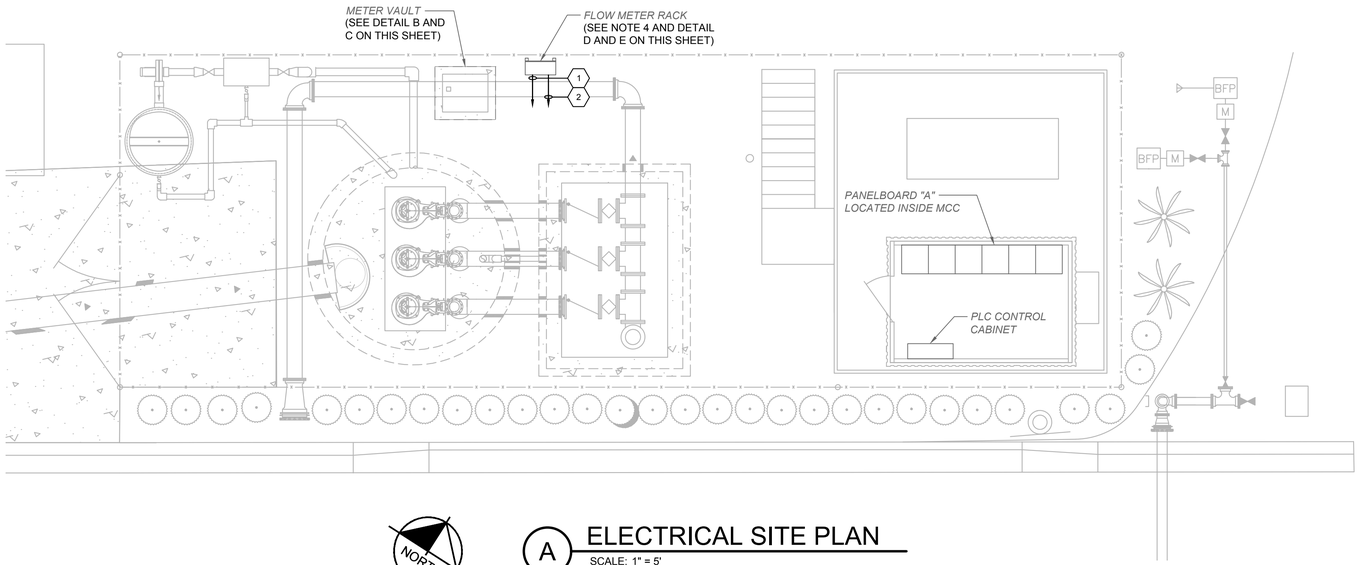

NORTH

A ELECTRICAL SITE PLAN

SCALE: 1" = 5'

GRAPHIC SCALE IN FEET
0 2.5 5 10

NOTES:

1. ALL NEW EQUIPMENT AND WIRING IS SHOWN BOLD. FUTURE EQUIPMENT IS SHOWN IN A LIGHT WEIGHT. EXISTING EQUIPMENT IS SHOWN IN A LIGHT WEIGHT AND IDENTIFIED WITH ITALICIZED TEXT.
2. ALL FASTENERS AND MOUNTING HARDWARE USED FOR THE INSTALLATION OF ELECTRICAL ITEMS SHALL BE 316 STAINLESS STEEL.
3. PROVIDE A ENGRAVED YELLOW NAMEPLATE ON ALL PANELS INDICATING WHERE THE PANEL IS FED FROM.
4. DEMOLISH EXISTING EQUIPMENT, REPLACE EXISTING WIRING. REUSE POSTS, BACKBOARD, SUNSHIELD AND CONDUIT TO THE FULLEST EXTENT POSSIBLE.
5. PROVIDE AND INSTALL PHOENIX CONTACT BXT-4XP-SEC-T3-120+1X2-24 SURGE PROTECTION DEVICE, OR EQUAL TO PROTECT 120V CIRCUIT AND 4-20mA ANALOG SIGNAL.
6. PROVIDE AND INSTALL ULTRASONIC NON-INTRUSIVE FLOW METER SENSOR AND TRANSMITTER. EQUIPMENT SHALL BE AS THE ONE MANUFACTURED BY SIEMENS, SITRANS F SERIES. TRANSMITTER POWER SUPPLY SHALL BE 120VAC @ 60HZ, ANALOGUE OUTPUT MINIMUM ONE CHANNEL WITH 4-20mA RANGE, DIGITAL OUTPUT MINIMUM 3-30VDC @ 110mA, COMMUNICATION MODBUS RTU RS 485, ENCLOSURE RATED NEMA 4X, WALL MOUNTED CAPABLE, SENSOR CABLE MINIMUM 50FT.

(X) KEYED NOTES:

1. (1) 1 PR. #16 SHLD. IN 3/4"C TO PLC CONTROL CABINET
2. 2#12, #12 GND. IN 3/4"C TO PANELBOARD "A"
3. FLOW METER MANUFACTURER CABLE TO FLOW METER TRANSMITTER IN 1"C

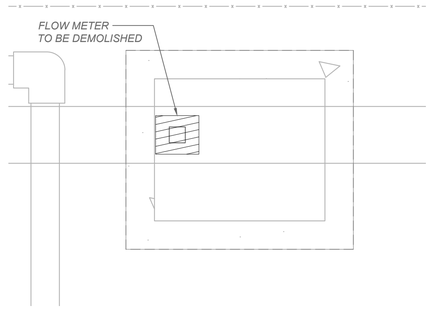

NORTH

B METER VAULT DEMOLITION PLAN

SCALE: 3/4"=1'- 0"

GRAPHIC SCALE IN FEET
0 3/8 3/4 3/2

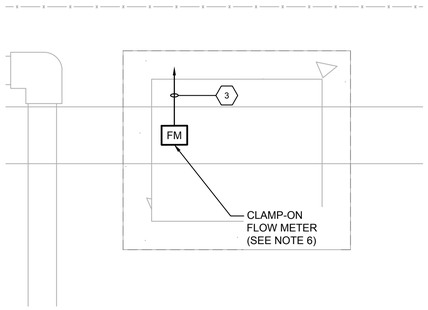

NORTH

C METER VAULT PROPOSED FLOW METER

SCALE: 3/4"=1'- 0"

GRAPHIC SCALE IN FEET
0 3/8 3/4 3/2

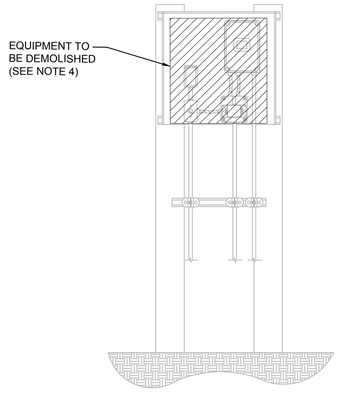

D FLOW METER RACK DEMOLITION PLAN

SCALE: NO SCALE

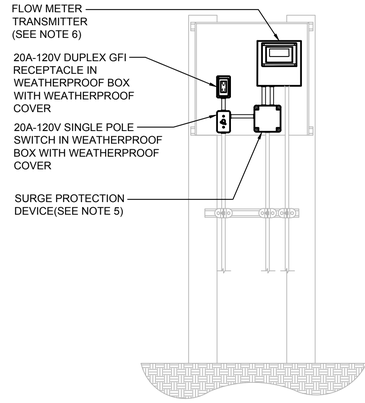

E FLOW METER RACK PROPOSED TRANSMITTER

SCALE: NO SCALE

GROUNDWATER / DEWATERING NOTE:
THE PRESENCE OF GROUNDWATER SHOULD BE ANTICIPATED ON THIS PROJECT. CONTRACTOR'S BID SHALL INCLUDE CONSIDERATION FOR THIS ISSUE. WHEN PERFORMING GRADING OPERATIONS DURING PERIODS OF WET WEATHER, PROVIDE ADEQUATE DEWATERING, DRAINAGE AND GROUND WATER MANAGEMENT TO CONTROL MOISTURE OF SOILS.

811 KNOW WHAT'S BELOW ALWAYS CALL 811 BEFORE YOU DIG
It's fast. It's free. It's the law.
www.callsunshine.com

No.	Revisions	Date	By

Kimley»Horn
© 2025 KIMLEY-HORN AND ASSOCIATES, INC.
200 CENTRAL AVENUE, SUITE 600
ST. PETERSBURG, FL 33701
P: 727 547 3999
WWW.KIMLEY-HORN.COM REGISTRY NO. 35106

DESIGN ENGINEER: JASON ALAN HOYT, P.E.
FL LICENSE NUMBER 101453
DATE:

SCALE: AS NOTED
DESIGN: JAH
DRAWN: RG
CHECKED: JAH

PUMP STATION NO. 2 ELECTRICAL SITE PLAN AND DETAILS

CITY OF ST. PETE BEACH
PUMP & LIFT STATION REHABILITATIONS
PID# PS26-401-608-00
PINELLAS COUNTY FLORIDA

DATE: APRIL 2026

PROJECT NO. 148404108

SHEET NUMBER PS2-1

NOTES:

1. ALL NEW EQUIPMENT AND WIRING IS SHOWN BOLD. FUTURE EQUIPMENT IS SHOWN IN A LIGHT WEIGHT. EXISTING EQUIPMENT IS SHOWN IN A LIGHT WEIGHT AND IDENTIFIED WITH ITALICIZED TEXT.
2. ALL FASTENERS AND MOUNTING HARDWARE USED FOR THE INSTALLATION OF ELECTRICAL ITEMS SHALL BE 316 STAINLESS STEEL.
3. PROVIDE A ENGRAVED YELLOW NAMEPLATE ON ALL PANELS INDICATING WHERE THE PANEL IS FED FROM.
4. DEMOLISH EXISTING EQUIPMENT, REPLACE EXISTING WIRING. REUSE POSTS, BACKBOARD, SUNSHIELD AND CONDUIT TO THE FULLEST EXTENT POSSIBLE.
5. PROVIDE AND INSTALL PHOENIX CONTACT BXT-4XP-SEC-T3-120+1X2-24 SURGE PROTECTION DEVICE, OR EQUAL TO PROTECT 120V CIRCUIT AND 4-20mA ANALOG SIGNAL.
6. PROVIDE AND INSTALL ULTRASONIC NON-INTRUSIVE FLOW METER SENSOR AND TRANSMITTER. EQUIPMENT SHALL BE AS THE ONE MANUFACTURED BY SIEMENS, SITRANS F SERIES. TRANSMITTER POWER SUPPLY SHALL BE 120VAC @ 60HZ, ANALOGUE OUTPUT MINIMUM ONE CHANNEL WITH 4-20mA RANGE, DIGITAL OUTPUT MINIMUM 3-30VDC @ 110mA, COMMUNICATION MODBUS RTU RS 485, ENCLOSURE RATED NEMA 4X, WALL MOUNTED CAPABLE, SENSOR CABLE MINIMUM 50FT.

(X) KEYED NOTES:

1. (1) 1 PR. #16 SHLD. IN 3/4"C TO PLC CONTROL CABINET
2. 2#12, #12 GND. IN 3/4"C TO PANELBOARD "A"
3. FLOW METER MANUFACTURER CABLE TO FLOW METER TRANSMITTER IN 1"C

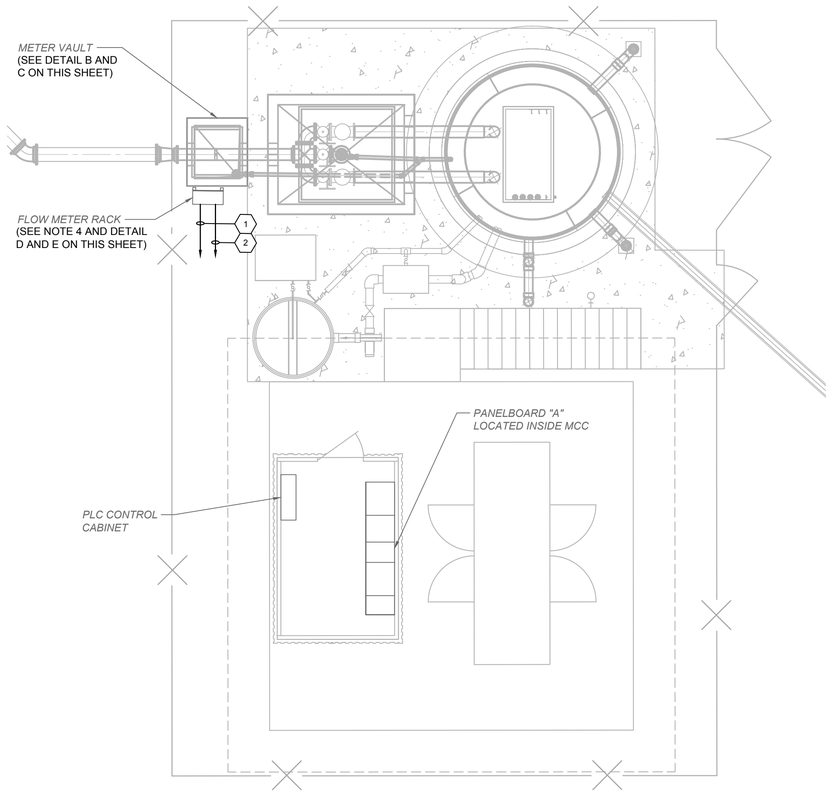

NORTH

A ELECTRICAL SITE PLAN

SCALE: 1" = 5'

GRAPHIC SCALE IN FEET
0 2.5 5 10

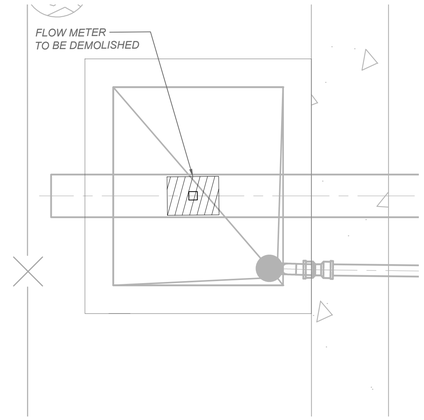

NORTH

B METER VAULT DEMOLITION DETAIL

SCALE: 3/4"=1'- 0"

GRAPHIC SCALE IN FEET
0 3/8 3/4 3/2

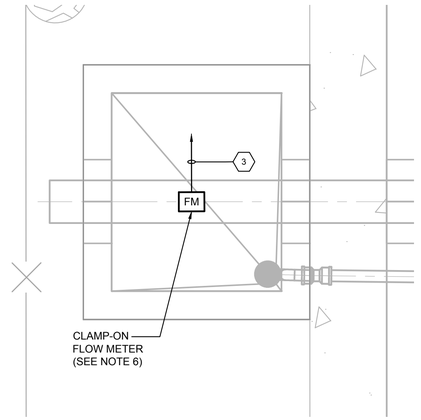

NORTH

C METER VAULT PROPOSED FLOW METER

SCALE: 3/4"=1'- 0"

GRAPHIC SCALE IN FEET
0 3/8 3/4 3/2



D FLOW METER RACK DEMOLITION DETAIL

SCALE: NO SCALE

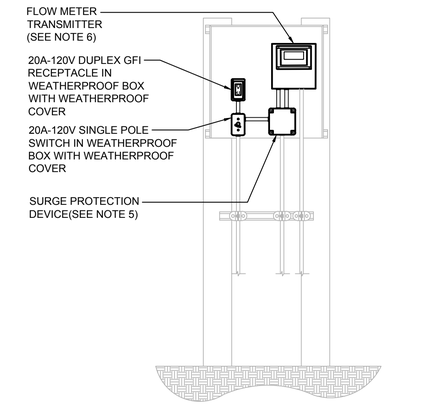

E FLOW METER RACK PROPOSED TRANSMITTER

SCALE: NO SCALE

GROUNDWATER / DEWATERING NOTE:
THE PRESENCE OF GROUNDWATER SHOULD BE ANTICIPATED ON THIS PROJECT. CONTRACTOR'S BID SHALL INCLUDE CONSIDERATION FOR THIS ISSUE. WHEN PERFORMING GRADING OPERATIONS DURING PERIODS OF WET WEATHER, PROVIDE ADEQUATE DEWATERING, DRAINAGE AND GROUND WATER MANAGEMENT TO CONTROL MOISTURE OF SOILS.

811 KNOW WHAT'S BELOW ALWAYS CALL 811 BEFORE YOU DIG
It's fast. It's free. It's the law.
www.callsunshine.com

No.	Revisions	Date	By

Kimley»Horn
© 2025 KIMLEY-HORN AND ASSOCIATES, INC.
200 CENTRAL AVENUE, SUITE 600
ST. PETERSBURG, FL 33701
P: 727 547 3999
WWW.KIMLEY-HORN.COM REGISTRY NO. 35106

DESIGN ENGINEER: JASON ALAN HOYT, P.E.
FL LICENSE NUMBER 101453
DATE:

SCALE: AS NOTED
DESIGN: JAH
DRAWN: RG
CHECKED: JAH

PUMP STATION NO. 3 ELECTRICAL SITE PLAN AND DETAILS

CITY OF ST. PETE BEACH
PUMP & LIFT STATION REHABILITATIONS
PID# PS26-401-608-00
PINELLAS COUNY FLORIDA

DATE:
APRIL 2026

PROJECT NO.
148404108

SHEET NUMBER
PS3-1

6. Updated Pay Item Descriptions (behind this page)

SECTION 2 - PAY ITEM DESCRIPTIONS
ADDENDUM #5

2.01 SCOPE

The scope of this section of the Contract Documents is to further define the items included in each Pay Item in the Bid Form section of the Contract Documents. Payment will be made based on the specified items included in the description in this section for each Pay Item.

All contract prices included in the Bid Form section will be full compensation for all shop drawings, working drawings, labor, materials, tools, equipment, and incidentals necessary to complete the construction as shown on the Contract Drawings and/or as specified in the Contract Documents to be performed under this Contract. Actual quantities of each item bid on a unit price basis will be determined upon completion of the construction in the manner set up for each item in this section of the Specifications. Payment for all items listed in the Bid Form will constitute full compensation for all work shown and/or specified to be performed under this Contract.

2.02 ESTIMATED QUANTITIES

The quantities shown are approximate and are given only as a basis of calculation upon which the award of the Contract is to be made. The City does not assume any responsibility for the final quantities, nor shall the Contractor claim misunderstanding because of such estimate of quantities. Final payment will be made only for satisfactorily completed quantity of each item.

2.03 WORK OUTSIDE AUTHORIZED LIMITS

No payment will be made for work constructed outside the authorized limits of work.

2.04 MEASUREMENT STANDARDS

Unless otherwise specified for the particular items involved, all measurements of distance shall be taken horizontally or vertically.

2.05 AREA MEASUREMENTS

In the measurement of items to be paid for on the basis of area of finished work, the lengths and/or widths to be used in the calculations shall be the final dimensions measured along the surface of the completed work within the neat lines shown or designated.

2.06 LUMP SUM ITEMS

Where payment for items is shown to be paid for on a lump sum basis, no separate payment will be made for any item of work required to complete the lump sum items. Lump sum contracts shall be complete, tested and fully operable prior to request for final payment. Contractor may be required to provide a break-down of the lump sum totals.

2.07 PAY ITEM DESCRIPTIONS

Separate payment will be made for the items of work described herein and listed on the Bid Form. Any related work not specifically listed but required for satisfactory completion of the work shall be considered to be included in the scope of the appropriate listed work items.

No separate payment will be made for the incidental items not included in the Pay Item descriptions. The cost to complete such work shall be included in the applicable Pay Item unit cost. Final payments shall not be requested by the Contractor or made by the City until as-built (record) drawings have been submitted and approved by the City. Incidental items include, but are not limited to:

1. Shop Drawings, Working Drawings.
2. Clearing, grubbing and grading except as hereinafter specified.
3. Trench excavation, including necessary pavement removal and rock removal, except as otherwise specified.
4. Dewatering and disposal of surplus water.
5. Structural fill, backfill, and grading.
6. Replacement of unpaved roadways, and shrubbery plots.
7. Foundation and borrow materials, except as hereinafter specified.
8. Testing and placing system in operation.
9. Any material and equipment required to be installed and utilized for the tests.
10. Pipe, structures, pavement replacement, driveways and/or appurtenances included within the limits of lump sum work, unless otherwise shown.
11. Maintaining the existing quality of service during construction.
12. Appurtenant work as required for a complete and operable system.
13. Seeding and hydro mulching.
14. As-built Record Drawings, clean up, and miscellaneous work.

PAY ITEM NO. 1 – MOBILIZATION

Mobilization shall be the preparatory work and operations in mobilizing for beginning work on the project, including, but not limited to, those operations necessary for the movement of personnel, equipment, supplies and incidentals to the project site, and for the establishment of temporary offices, storage buildings, staging areas, maintaining traffic, safety equipment and first aid supplies, sanitary and other facilities, and installation of tree protection measures as required by the Contract Documents and applicable laws and regulations. The costs of submittals, bonds, required insurance, permits and any other preconstruction expense necessary for the start of the work, excluding the cost of construction materials, shall also be included in this item. Demobilization shall be the work of removing temporary facilities from the site, cleanup and restoration. Mobilization/Demobilization shall be limited to a maximum of ten percent (10%) of the total Bid Price.

Payment for mobilization/demobilization will be made on an incremental basis in accordance with the following:

Percent of Original Contract Amount:	Percent Allowable Payment of Mobilization/Demobilization Pay Item Price:
5	25
10	35
25	45
50	50
75	75
100	100

These payments will be subject to the standard retainage provided in the Contract. Payment of the retainage will be made after completion of the work and demobilization.

PAY ITEM NO. 2 – MAINTENANCE OF TRAFFIC

Payment for all work included, but is not limited to, under this Pay Item shall represent full compensation in accordance with the lump sum price bid for all maintenance of traffic, including coordination with the City and FDOT, and all equipment and labor necessary to comply with the FDOT Standard Plans Index 102 Series for Maintenance of Traffic.

Measurement for periodic payments of this lump sum Pay Item will be in accordance with the approved Schedule of Values, to be supplied by the Contractor in accordance with the Contract Documents.

PAY ITEM NO. 3 – EROSION AND SEDIMENT CONTROL

Payment for all work included, but is not limited to, under this Pay Item shall represent full compensation in accordance with the lump sum price bid for erosion and sediment control.

Measurement for periodic payments of this lump sum Pay Item will be in accordance with the approved Schedule of Values, to be supplied by the Contractor in accordance with the Contract Documents.

PAY ITEM NO. 4 – BYPASS PUMPING

Payment for all work included, but is not limited to, under this Pay Item shall represent full compensation in accordance with the lump sum price bid for all by-pass pumping. Cost includes all equipment and labor necessary to successfully bypass during construction in compliance with the Contract Documents.

Measurement for periodic payments for this lump sum Pay Item will be in accordance with the approved Schedule of Values, to be supplied by the Contractor in accordance with the Contract Documents.

PAY ITEM NO. 5 – PROJECT RECORD DOCUMENTS (AS-BUILT DRAWINGS AND O&M MANUALS)

Payment for all work included, but is not limited to, under this Pay Item shall represent full compensation in accordance with the lump sum price bid for as-built record drawings or any other required certifications to put proposed system in service and operation and maintenance manuals for all proposed equipment. All items are subject to approval by the Engineer.

Measurement for periodic payments of this lump sum Pay Item will be in accordance with the approved Schedule of Values, to be supplied by the Contractor in accordance with the Contract Documents.

PAY ITEM NO. 6 – CLEANING EXISTING VALVE VAULT INCLUDING REMOVAL OF DEBRIS AND SAND BLASTING AND RECOATING OF EXISTING FITTINGS

Payment for all work included, but is not limited to, under this Pay Item shall represent full compensation in accordance with the lump sum price bid for cleaning of existing valve vault including the removal of any debris and sand blasting and recoating of existing fittings. Sand blasting and recoating existing fittings includes removal, cleaning, surface preparation, exterior coating, and reinstalling the fitting in accordance with the Construction Drawings and Specifications. Payment includes any and all items necessary to complete work and shall represent full compensation for all labor, materials, necessary equipment, and incidentals necessary to complete the work, ready for approval and acceptance by the City.

Measurement for periodic payments of this lump sum Pay Item will be in accordance with the approved Schedule of Values, to be supplied by the Contractor in accordance with the Contract Documents.

PAY ITEM – ELECTRICAL EQUIPMENT RACK

Payment for all work included in this Pay Item shall represent full compensation in accordance with the lump sum price bid for furnishing and installing the listed electrical equipment including stainless steel unistrut rack, electric meter in aluminum enclosure, main disconnect, automatic transfer switch, pump control panel including VFDs as shown, junction box, relocation of existing SCADA panel, conduit, wiring, ground ring, and connection to existing electrical service. For Lift Station 07, the Bid shall include all applicable components above, in addition to a secondary electrical equipment rack that includes pump disconnects, junction boxes, and selector switches as shown in the Contract Documents. This Bid Item shall also include installation of all control panel components, installing pump motor leads, testing of power and control wiring to each submersible pump, and all other materials and equipment necessary for a complete and fully operable system, including testing and start-up, as shown on the Contract Documents.

Measurement for periodic payments of this lump sum Pay Item will be in accordance with the approved Schedule of Values, to be supplied by the Contractor in accordance with the Contract Documents.

PAY ITEM	DESCRIPTION	UNITS
7	ELECTRICAL EQUIPMENT RACK INCLUDING PUMP CONTROL PANEL (5 HP - 7.5 HP), METER, MAIN DISCONNECT, AUTOMATIC TRANSFER SWITCH, JUNCTION BOX, AND RELOCATION OF SCADA PANEL	LS
8	ELECTRICAL EQUIPMENT RACK INCLUDING PUMP CONTROL PANEL (12 HP WITH VFD), METER, MAIN DISCONNECT, AUTOMATIC TRANSFER SWITCH, JUNCTION BOX, AND RELOCATION OF SCADA PANEL	LS

PAY ITEM NO. 9 – ELEVATED PLATFORM

Payment for all work included in this Bid Item will be made at the applicable Contract lump sum price for furnishing and installing the elevated platform as shown on the Contract Drawings and as described in the Specifications. This Bid Item shall include the foundation, top concrete slab, columns, beams, stairs, stairs slab, and aluminum railings, placed and installed as shown on the Contract Documents. This Bid Item includes steel reinforcement and all associated work. Payment shall represent full compensation for all labor, materials, and equipment for mixing, placing, forming, finishing, and curing of the concrete, any required excavation, including rock as necessary, bedding, backfill, compaction, dewatering, sheeting, testing, and incidentals necessary to complete the work, ready for approval and acceptance by the City.

Measurement for periodic payments of this lump sum Pay Item will be in accordance with the approved Schedule of Values, to be supplied by the Contractor in accordance with the Contract Documents.

PAY ITEM NO. 10 – BACKUP GENERATOR, ENCLOSURE, AND SUB-BASE FUEL TANK

Payment for all work included in this Bid Item will be made on a lump sum basis and will include the direct cost for furnishing and installing the backup diesel generator, enclosure, and sub-base fuel tank, in accordance with Construction Drawings and Specifications. Payment shall represent full compensation for all labor, materials, necessary equipment, and incidentals necessary to complete the work, ready for approval and acceptance by the City.

Measurement for periodic payments of this lump sum Pay Item will be in accordance with the approved Schedule of Values, to be supplied by the Contractor in accordance with the Contract Documents.

PAY ITEM NO. 11 – SITE LIGHTING

Payment for all work included in this Bid Item will be made at the applicable Contract lump sum price for furnishing and installing site lighting as shown on the Contract Drawings and as described in the Specifications. This Bid Item shall include the lighting foundation, conduit, grounding wire, aluminum pole with hand hole, and LED site light placed and installed as shown on the Contract Documents. This Bid Item includes concrete reinforcement and all associated work. Payment shall represent full compensation for all labor, materials, necessary equipment, and incidentals necessary to complete the work, ready for approval and acceptance by the City.

Measurement for periodic payments of this lump sum Pay Item will be in accordance with the approved Schedule of Values, to be supplied by the Contractor in accordance with the Contract Documents.

PAY ITEM NO. 12 – 6 FEET TALL VINYL PRIVACY FENCE

Payment for all work included under this Pay Item will be made at the Contract unit bid per linear foot for the purchase and installation of the 6-feet vinyl privacy site fence in accordance with the Construction Drawings and Specifications. Payment includes any required excavation, including rock as necessary, bedding, backfill, dewatering, sheeting, and any and all other items necessary to complete work. Measurement will be based on the actual number of linear footage of vinyl fence furnished, installed, and approved. Payment shall represent full compensation for all labor, materials, equipment, and incidental items necessary to complete the work.

PAY ITEM NO. 13 – 6 FEET TALL, 4 FEET WIDE VINYL PRIVACY ACCESS GATE

Payment for all work included, but is not limited to, under this Pay Item shall represent full compensation in accordance with the lump sim price bid for furnishing and installing of the 6 feet tall, 4 feet wide vinyl privacy access gate in accordance with the Construction Drawings. Payment includes any required excavation, including rock as necessary, bedding, backfill, dewatering, sheeting, and any and all other items necessary to complete work.

Measurement for periodic payments of this lump sum Pay Item will be in accordance with the approved Schedule of Values, to be supplied by the Contractor in accordance with the Contract Documents.

PAY ITEM NO. 14 – CURB INSTALLATION

Payment for all work included under this Pay Item will be made at the Contract unit price bid per linear foot for furnishing and placing curb as shown on the Drawings and listed in the Bid Form. Measurement will be per actual number of linear feet of curbing installed. Payment shall represent full compensation for all labor, material and equipment for compacting subgrade, forming, furnishing, placing the concrete, and finishing as specified and all incidentals necessary for completion of this Pay Item, in accordance with Specifications.

PAY ITEM NO. 15 – POTABLE WATER SERVICE AND HOSE BIB RELOCATION

Payment for all work included, but is not limited to, under this Pay Item shall represent full compensation in accordance with the lump sum price bid for the proposed connection to existing water main, relocation of existing water service line including but not limited to excavation, including rock, dewatering, sheeting, bedding and backfill, compaction, testing, detectable warning tape, locator wire, and installation of the proposed hose bib assembly and piping, as shown in the Construction Drawings. Payment shall represent full compensation for all labor, materials, necessary equipment, and incidentals necessary to complete the work, ready for approval and acceptance by the City.

Measurement for periodic payments of this lump sum Pay Item will be in accordance with the approved Schedule of Values, to be supplied by the Contractor In accordance with the Contract Documents.

PAY ITEM NO. 16 – DEMOLITION

Payment for all work included, but is not limited to, under this Pay Item shall represent full compensation in accordance with the lump sum price bid for, including but not limited to the demolition of landscaping including trees, control panel, asphalt, manhole, curb, air release valve, concrete pad, air release valve cabinet, piping, and site fencing as shown on the contract documents. Payment includes disposal and any required excavation, including rock as necessary, bedding, backfill, dewatering, sheeting, and any and all other items necessary to complete work. Any equipment in working condition shall be salvaged as requested by the City.

Measurement for periodic payments of this lump sum Pay Item will be in accordance with the approved Schedule of Values, to be supplied by the Contractor in accordance with the Contract Documents.

PAY ITEM – ELECTRICAL I&C

Payment for all work included in this Pay Item shall represent full compensation in accordance with the lump sum price bid for furnishing and installing the listed pump control panel replacements including removal of the existing panel, installation of pump control panel with generator receptacle, modifications to the existing electrical equipment rack including but not limited to raceways, concrete posts, and concrete pad as necessary for the proposed pump control panel. This Bid Item shall include installation of all control panel components, installing conduit and pump motor leads, testing of power and control wiring to each submersible pump, and all other materials and equipment necessary for complete a complete a fully operable system, including testing and start-up, all as shown on the Contract Documents.

Measurement for periodic payments of this lump sum Pay Item will be in accordance with the approved Schedule of Values, to be supplied by the Contractor in accordance with the Contract Documents.

PAY ITEM	DESCRIPTION	UNITS
17	ELECTRICAL I&C (5 HP – 7.5 HP PUMP CONTROL PANEL REPLACEMENT)	LS
18	ELECTRICAL I&C (35 HP PUMP CONTROL PANEL REPLACEMENT, WITH SOFT STARTER)	LS

PAY ITEM NO. 19 – CLEAN WETWELL INCLUDING SAND/DEBRIS PUMP OUT

Payment for all work included, but is not limited to, under this Pay Item shall represent full compensation in accordance with the lump sum price bid for existing wet well cleaning. Existing wet wells shall be cleaned in accordance with the Construction Drawings. Payment includes any and all items necessary to complete work. Payment shall represent full compensation for all labor, materials, necessary equipment, and incidentals necessary to complete the work, ready for approval and acceptance by the City.

Measurement for periodic payments of this lump sum Pay Item will be in accordance with the approved Schedule of Values, to be supplied by the Contractor in accordance with the Contract Documents.

PAY ITEM NO. 20 – 2" S.S. AIR RELEASE VALVE (ABOVE GROUND)

Payment for all work included, but is not limited to, under this Pay Item shall represent full compensation in accordance with the lump sum price for installation of a 2" stainless steel air release valve including air release valve body, concrete pad, underdrain, piping, valve, and connection to existing force main. Payment shall represent full compensation for all labor, materials, necessary equipment, and incidentals necessary to complete the work, ready for approval and acceptance by the City.

Measurement for periodic payments of this lump sum Pay Item will be in accordance with the approved Schedule of Values, to be supplied by the Contractor in accordance with the Contract Documents.

PAY ITEM NO. 21 – FORCE MAIN DETECTABLE WARNING TAPE

Payment for all work included in this Pay Item shall be made at the applicable Contract unit price bid per the schedule of prices for furnishing and installing force main detectable warning tape as shown in the Contract Documents and listed on the Bid Form.

Measurement and Payment shall be made for the actual length of detectable warning tape installed, approved, certified, and placed into operation and will represent full compensation for all labor, materials and equipment required to complete these Pay Items, including but not limited to excavation, including rock, dewatering, sheeting, bedding and backfill, compaction, coordination with other utilities that are disturbed during construction, protection of existing facilities and structures, and all other incidentals for complete installation. No additional compensation shall be made for excavation below the bottom of the pipe, rock removal, bedding and backfill material, or

for repair of any trench settlement. No additional compensation shall be made for extensive dewatering.

PAY ITEM NO. 22 – 6 FEET TALL, 12 FEET WIDE VINYL PRIVACY DOUBLE GATE

Payment for all work included, but is not limited to, under this Pay Item shall represent full compensation in accordance with the lump sim price bid for the purchase and installation of the 12-feet vinyl double door swinging access gate in accordance with the Construction Drawings and Specifications. Payment includes any required excavation, including rock as necessary, bedding, backfill, dewatering, sheeting, and any and all other items necessary to complete work.

Measurement for periodic payments of this lump sum Pay Item will be in accordance with the approved Schedule of Values, to be supplied by the Contractor in accordance with the Contract Documents.

PAY ITEM NO. 23 – RECLAIMED WATER SERVICE AND HOSE BIB RELOCATION

Payment for all work included, but is not limited to, under this Pay Item shall represent full compensation in accordance with the lump sum price bid for the proposed connection to existing water main, relocation of existing water service line including but not limited to excavation, including rock, dewatering, sheeting, bedding and backfill, compaction, testing, detectable warning tape, locator wire, and installation of the proposed hose bib assembly and piping, as shown in the Construction Drawings. Payment shall represent full compensation for all labor, materials, necessary equipment, and incidentals necessary to complete the work, ready for approval and acceptance by the City.

Measurement for periodic payments of this lump sum Pay Item will be in accordance with the approved Schedule of Values, to be supplied by the Contractor In accordance with the Contract Documents.

PAY ITEM NO. 24 – SHELL RESTORATION

Payment for all work included in these Bid Items will be made at the applicable Contract unit price bid per cubic yard of shell restoration as listed on the Bid Form. Density for backfill compaction shall be 95% per AASHTO T-180 density. Measurement of restoration will be per the actual number of cubic yards installed. Contractor shall match existing shell/rock material. Payment shall represent full compensation for all labor, materials and equipment for compacting subgrade, furnishing and installing the shell/rock, including all incidentals necessary to complete the restoration as shown on the Contract Drawings and included in the Specifications, all ready for approval and acceptance by the City.

PAY ITEM NO. 25 – SIDEWALK REPLACEMENT

Payment for all work included under this Pay Item will be made at the Contract unit price bid per square yard of concrete sidewalk installed as shown in the Contract Drawings and as listed on the Bid Form. Measurement of sidewalk restoration will be per the actual number of square yards replaced. Payment shall represent full compensation for all labor, materials and equipment for

cutting the edges of existing concrete, compacting subgrade, furnishing and installing the concrete and all incidentals necessary to complete the sidewalk restoration as shown on the Contract Drawings and included in the Specifications, all ready for approval and acceptance by the City.

PAY ITEM NO. 26 – LANDSCAPING

Payment for all work included, but not limited to, under this Pay Item shall represent full compensation, in accordance with the lump sum price bid, for all tree and shrub installation in accordance with the Construction Drawings and Specifications. Payment shall represent full compensation for all labor, materials, equipment, and incidental items necessary to complete the work, including any required excavation (including rock as necessary), bedding, backfill, dewatering, sheeting, testing, and any and all other items necessary to complete the work.

Measurement for periodic payments of this lump sum Pay Item will be in accordance with the approved Schedule of Values, to be supplied by the Contractor in accordance with the Contract Documents.

PAY ITEM NO. 27 – IRRIGATION SYSTEM

Payment for all work included under this Pay Item shall represent full compensation in accordance with the lump sum price bid for the irrigation system. Payment shall represent full compensation for all labor, materials and equipment necessary for site preparation, furnishing and installing the irrigation system including but not limited to MP Strip Shrub Rotator (up to 9), MP Shrub Rotator, control valve, main line (up to 20 LF), lateral line (up to 150 LF) and connection to the reclaimed water service, in accordance with the Contract Drawings and Specifications.

Measurement for periodic payments of this lump sum Pay Item will be in accordance with the approved Schedule of Values, to be supplied by the Contractor in accordance with the Contract Documents

PAY ITEM NO. 28 – FLOW METER REPLACEMENT (SIEMENS SITRANS F SERIES)

Payment for all work included, but is not limited to, under this Bid Item shall represent full compensation in accordance with the lump sum price bid for the purchase, installation, demolition, and instrumentation and controls; including coordination with the City's SCADA subcontractor for reinstallation, controls, enclosure, setup, and commissioning of a Siemens Sitrans F Series Flow Meter and appurtenances included in the Siemens Sitrans F Series meter assembly, conduit, wire, and transmitter in accordance with Construction Drawings and Specifications. This bid item shall include instrumentation and controls including coordination with City's SCADA subcontractor for reinstallation, controls setup, and commissioning. Payment shall represent full compensation for all labor, materials, necessary equipment, and incidentals necessary to complete the work, ready for approval and acceptance by the City.

Measurement for periodic payments of this lump sum bid item will be in accordance with the approved Schedule of Values, to be supplied by the Contractor in accordance with the Contract Documents.

155 Corey Avenue
St. Pete Beach, FL 33706-1839
www.stpetebeach.org

ADDENDUM 6

Wastewater Lift Stations Rehabilitation

Issued 5/1/2026

*Sealed bids must be received by **9:00 AM on 05/06/2026** electronically via Bonfire. They will be publicly opened and read at **11:00 AM on 05/06/2026.** All bidders are invited to attend this bid opening. Bids received after the deadline will not be accepted.*

Addendum 6 includes:

1. Questions and Answers
2. Electrical Sheets

1. Questions and Answers

1. Will the Generator & ATS be purchased as a set?
Response: Contractor to source by any means that conforms to Specifications Section 16450 and Contract Drawings.

2. Please verify if LS 4 & 10 has an existing light pole for noted fixture or will one need to be added to quote for these sites. No detail for height, material or mounting design was provided for poles.
Response: Mounting height provided on Contract Drawings. Lift Stations 4, 7, and 10 electrical site plans on the Contract Drawings updated to include pole model and mounting information.

2. Electrical Sheets

(Behind this Page)

NORTH

GRAPHIC SCALE IN FEET
0 2.5 5 10

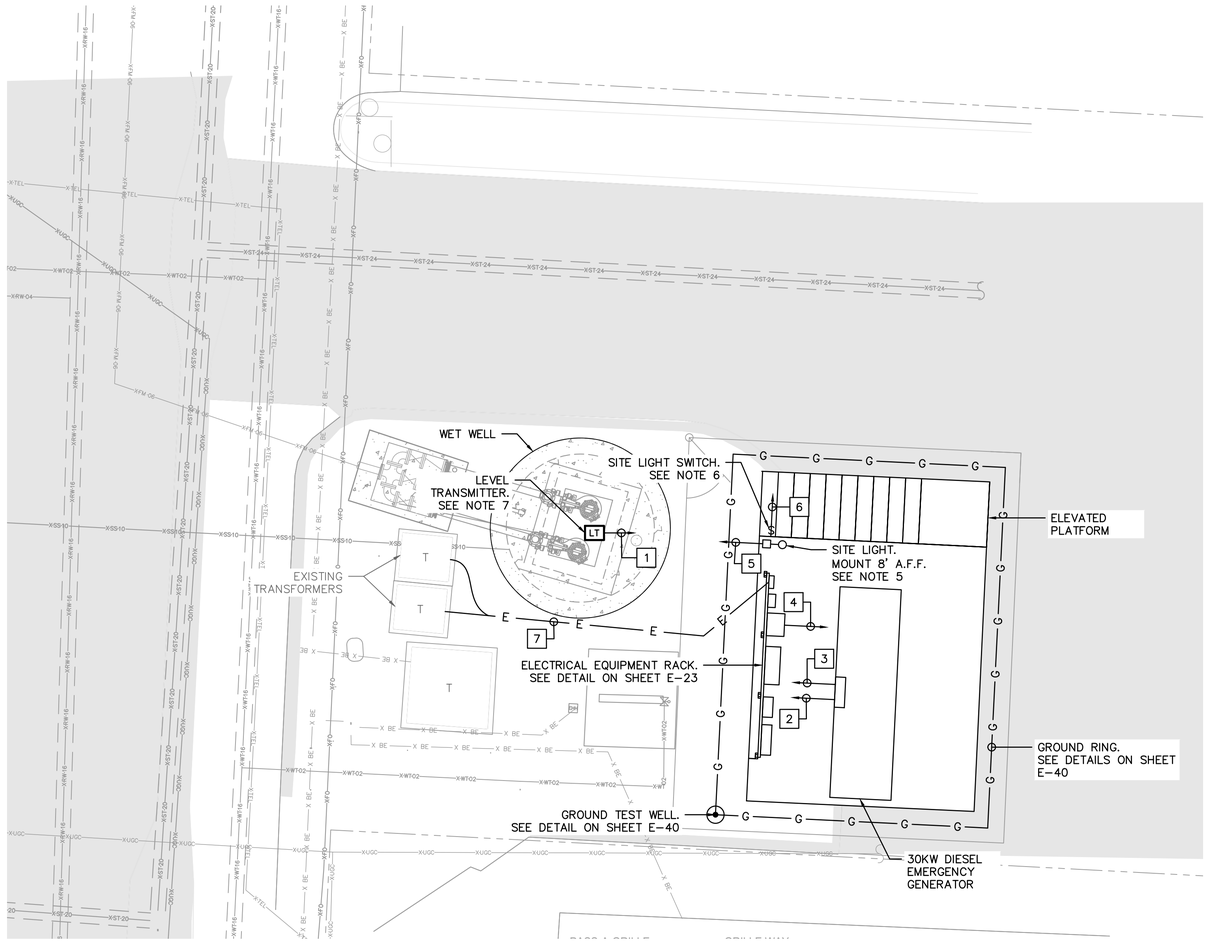

A ELECTRICAL SITE PLAN
SCALE: 1" = 5'

GENERAL NOTES:

1. COORDINATE RELOCATION OF ELECTRIC SERVICE WITH DUKE ENERGY.
2. REUSE EXISTING CONDUIT TO THE FULLEST EXTENT POSSIBLE.
3. CONDUITS SHOWN ARE REPRESENTATIVE ONLY. CONTRACTOR SHALL DETERMINE CONDUIT LOCATION AND ROUTING.
4. SEE ONE-LINE DIAGRAM ON SHEET E-03 FOR ADDITIONAL CONDUIT AND WIRING.
2. POLE-MOUNTED FIXTURE, LITHONIA #DSXF1 LED P2 40K WFL MVOLT IS DDBXD ON LITHONIA #SSA 8 4C T20 UL NEC DDBXD POLE. CONTRACTOR TO MOUNT POLE PER MANUFACTURER'S DETAIL AND PROVIDE 2-3/8" TENON MOUNT, HANDHOLD COVER, AND FULL BASE COVER. CONTRACTOR TO FIELD ADJUST LIGHT ORIENTATION AS REQUIRED.
6. WEATHERPROOF 20A-1P SITE LIGHT SWITCH. MOUNT TO THE ELEVATED PLATFORM COLUMN, 48" ABOVE THE STEP.
7. REPLACE EXISTING SUBMERSIBLE LEVEL TRANSMITTER WITH A RADAR LEVEL TRANSMITTER. SEE INSTALLATION DETAIL ON SHEET E-41.

KEY NOTES:

1. LEVEL TRANSMITTER CABLE IN EXISTING 1-1/4" CONDUIT TO SCADA PANEL ON ELECTRICAL EQUIPMENT RACK
2. 2#12 AND #12 GND. IN 3/4" CONDUIT TO PUMP CONTROL PANEL ON ELECTRICAL EQUIPMENT RACK
3. 8#14 IN AND (1) ETHERNET CABLE 1" CONDUIT TO SCADA PANEL ON ELECTRICAL EQUIPMENT RACK
4. 4#14 AND (1) ETHERNET CABLE IN 1" CONDUIT TO SCADA PANEL ON ELECTRICAL EQUIPMENT RACK
5. 2#12 AND #12 GND. IN 1" CONDUIT TO PUMP CONTROL PANEL ON ELECTRICAL EQUIPMENT RACK
6. 2#12 AND #12 GND. IN 1" CONDUIT TO SITE LIGHT
7. 4#1 IN 1-1/2" CONDUIT TO EXISTING PAD-MOUNTED TRANSFORMER

No.	Revisions	Date	By
2	BID ADDENDUM #6	4/30/2026	JAH

Kimley»Horn

© 2025 KIMLEY-HORN AND ASSOCIATES, INC.
200 CENTRAL AVENUE, SUITE 600
ST. PETERSBURG, FL 33701
P. 727 547 3999
WWW.KIMLEY-HORN.COM REGISTRY NO. 35106

DESIGN ENGINEER:
JASON A. HOYT, P.E.
FL LICENSE NUMBER
101453
DATE:

SCALE: AS NOTED
DESIGN: JAH
DRAWN: EBW
CHECKED: JAH

LIFT STATION 4 REHABILITATION
ELECTRICAL SITE PLAN

CITY OF ST. PETE BEACH
PUMP & LIFT STATION
REHABILITATIONS
PID# PS26-401-608-00
PINELLAS COUNY FLORIDA

DATE:
APRIL 2026

PROJECT NO.
148404108

SHEET NUMBER
E-02

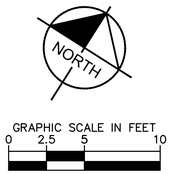

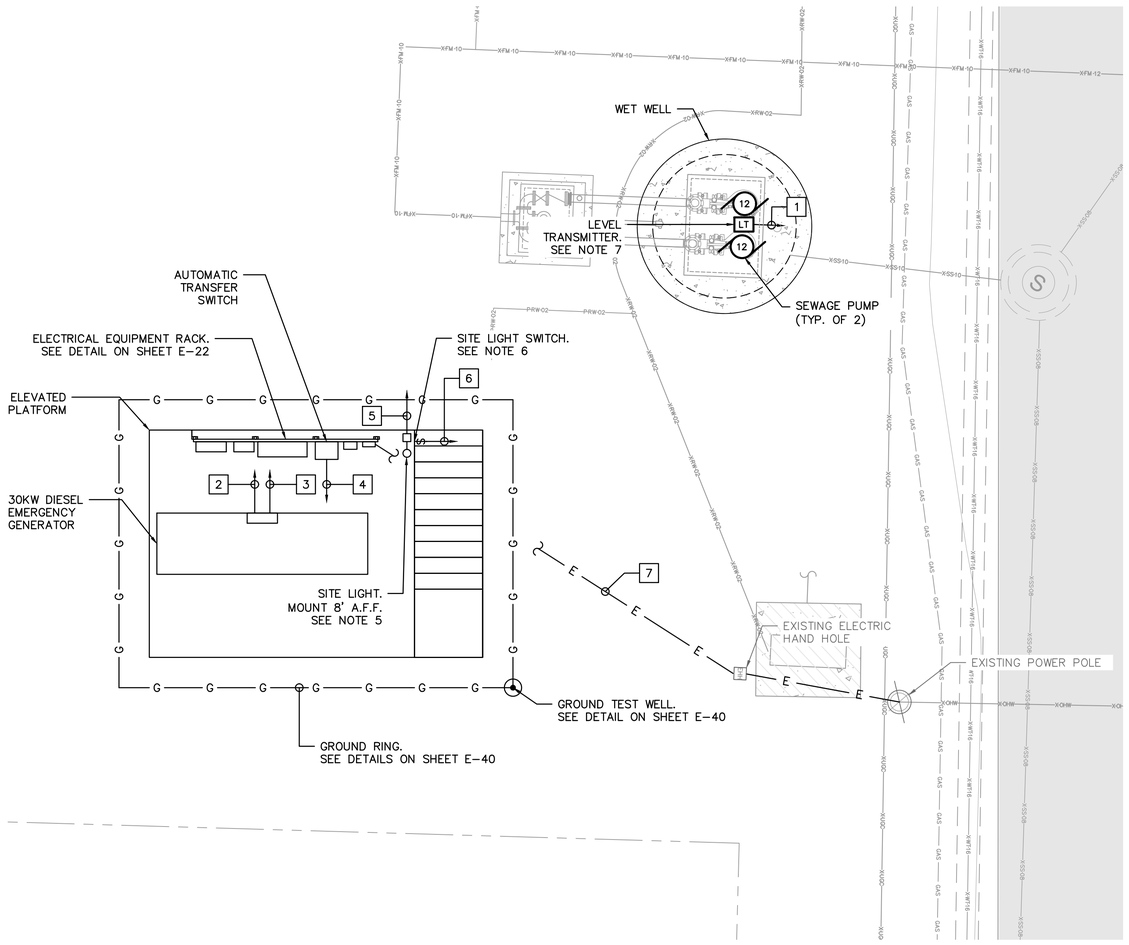

A ELECTRICAL SITE PLAN

SCALE: 1" = 5'

GENERAL NOTES:

1. COORDINATE RELOCATION OF ELECTRIC SERVICE WITH DUKE ENERGY.
2. REUSE EXISTING CONDUIT TO THE FULLEST EXTENT POSSIBLE.
3. CONDUITS SHOWN ARE REPRESENTATIVE ONLY. CONTRACTOR SHALL DETERMINE CONDUIT LOCATION AND ROUTING.
4. SEE ONE-LINE DIAGRAM ON SHEET E-03 FOR ADDITIONAL CONDUIT AND WIRING.
2. 5. POLE-MOUNTED FIXTURE, LITHONIA #DSXF1 LED P2 40K WFL MVOLT IS DDBXD ON LITHONIA #SSA 8 4C T20 UL NEC DDBXD POLE. CONTRACTOR TO MOUNT POLE PER MANUFACTURER'S DETAIL AND PROVIDE 2-3/8" TENON MOUNT, HANDHOLD COVER, AND FULL BASE COVER. CONTRACTOR TO FIELD ADJUST LIGHT ORIENTATION AS REQUIRED.
6. WEATHERPROOF 20A-1P SITE LIGHT SWITCH. MOUNT TO THE ELEVATED PLATFORM COLUMN, 48" ABOVE THE STEP.
7. REPLACE EXISTING SUBMERSIBLE LEVEL TRANSMITTER WITH A RADAR LEVEL TRANSMITTER. SEE INSTALLATION DETAIL ON SHEET E-41.

KEY NOTES:

1. LEVEL TRANSMITTER CABLE IN EXISTING 1-1/4" CONDUIT TO SCADA PANEL ON ELECTRICAL EQUIPMENT RACK
2. 2#12 AND #12 GND. IN 3/4" CONDUIT TO PUMP CONTROL PANEL ON ELECTRICAL EQUIPMENT RACK
3. 8#14 IN AND (1) ETHERNET CABLE 1" CONDUIT TO SCADA PANEL ON ELECTRICAL EQUIPMENT RACK
4. 4#14 AND (1) ETHERNET CABLE IN 1" CONDUIT TO SCADA PANEL ON ELECTRICAL EQUIPMENT RACK
5. 2#12 AND #12 GND. IN 1" CONDUIT TO PUMP CONTROL PANEL ON ELECTRICAL EQUIPMENT RACK
6. 2#12 AND #12 GND. IN 1" CONDUIT TO SITE LIGHT
7. 4#1 IN 1-1/2" CONDUIT TO EXISTING POWER POLE RUN THROUGH EXISTING ELECTRICAL HAND HOLE

No.	Revisions	Date	By
2	BID ADDENDUM #6	4/30/2026	JAH

Kimley»Horn
© 2025 KIMLEY-HORN AND ASSOCIATES, INC.
200 CENTRAL AVENUE, SUITE 600
ST. PETERSBURG, FL 33701
P. 727 547 3999
WWW.KIMLEY-HORN.COM REGISTRY NO. 35106

DESIGN ENGINEER:
JASON A. HOYT, P.E.
FL LICENSE NUMBER
101453
DATE:

SCALE: AS NOTED
DESIGN: JAH
DRAWN: EBW
CHECKED: JAH

LIFT STATION 10 REHABILITATION
ELECTRICAL SITE PLAN

CITY OF ST. PETE BEACH
PUMP & LIFT STATION
REHABILITATIONS
PID# PS26-401-608-00
PINELLAS COUNY FLORIDA

DATE:
APRIL 2026

PROJECT NO.
148404108

SHEET NUMBER
E-08

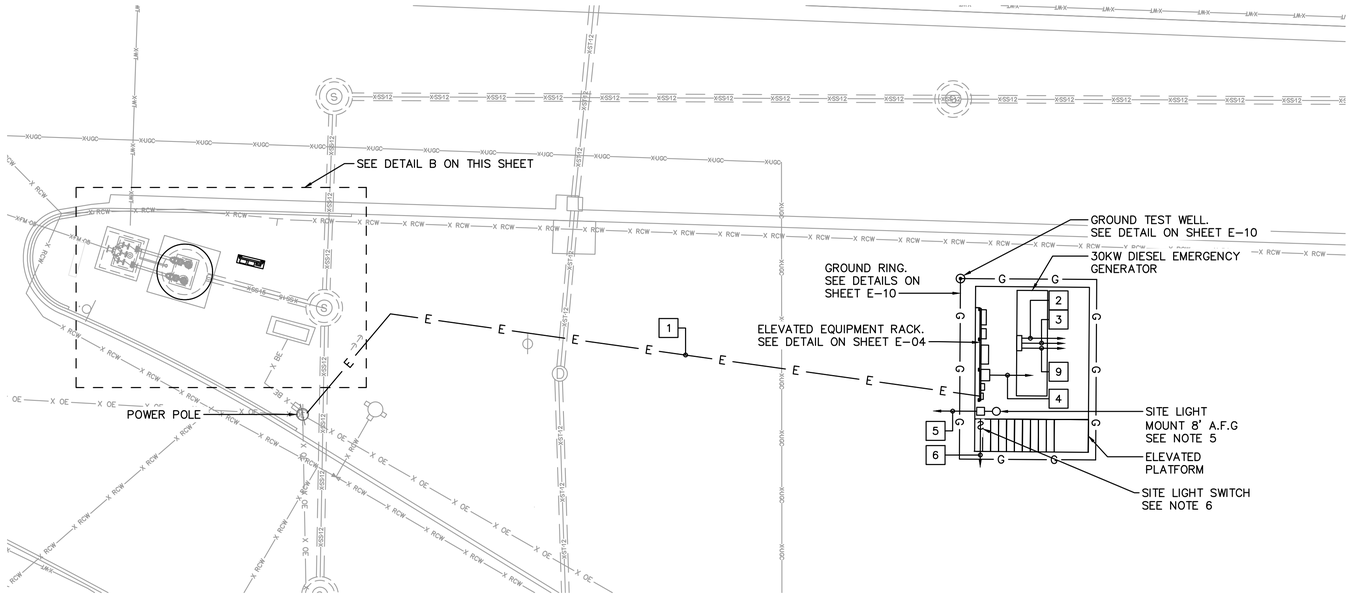

NORTH

A ELECTRICAL SITE PLAN

SCALE: 1" = 10'

GRAPHIC SCALE IN FEET
0 5 10 20

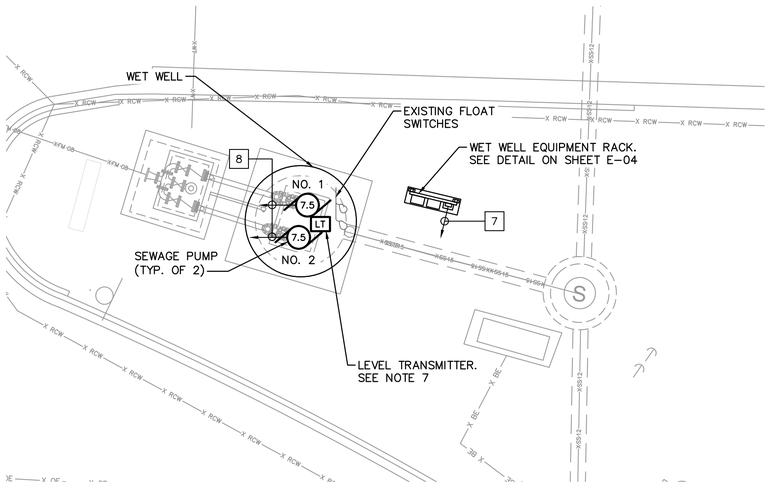

NORTH

B WET WELL ELECTRICAL PLAN

SCALE: 1" = 5'

GRAPHIC SCALE IN FEET
0 2.5 5 10

GENERAL NOTES:

1. COORDINATE ELECTRIC SERVICE WITH DUKE ENERGY.
2. REUSE EXISTING CONDUIT TO THE FULLEST EXTENT POSSIBLE.
3. CONDUITS SHOWN ARE REPRESENTATIVE ONLY. CONTRACTOR SHALL DETERMINE CONDUIT LOCATION AND ROUTING.
4. SEE ONE-LINE DIAGRAM ON SHEET E-03 FOR ADDITIONAL CONDUIT AND WIRING.
5. POLE-MOUNTED FIXTURE, LITHONIA #DSXF1 LED P2 40K WFL MVOLT IS DDBXD ON LITHONIA #SSA 8 4C T20 UL NEC DDBXD POLE. CONTRACTOR TO MOUNT POLE PER MANUFACTURER'S DETAIL AND PROVIDE 2-3/8" TENON MOUNT, HANDHOLD COVER, AND FULL BASE COVER. CONTRACTOR TO FIELD ADJUST LIGHT ORIENTATION AS REQUIRED.
6. WEATHERPROOF 20A-1P SITE LIGHT SWITCH. MOUNT TO THE ELEVATED PLATFORM COLUMN, 48" ABOVE THE STEP.
7. REPLACE EXISTING SUBMERSIBLE LEVEL TRANSMITTER WITH A RADAR LEVEL TRANSMITTER. SEE INSTALLATION DETAIL ON SHEET E-10.
8. THE WET IS CLASSIFIED AS A CLASS 1, DIVISION 1, GROUP D ARE IN ACCORDANCE WITH NFPA 820. THE INSTALLATION OF ALL ELECTRICAL EQUIPMENT SHALL BE PERFORMED IN ACCORDANCE WITH THIS CLASSIFICATION.

KEY NOTES:

1. 4#1 IN 2" CONDUIT TO POWER POLE
2. 2#12 AND #12 GND. IN 1" CONDUIT TO PUMP CONTROL PANEL ON ELECTRICAL EQUIPMENT RACK
3. 8#14 IN AND (1) ETHERNET CABLE 1" CONDUIT TO SCADA PANEL ON ELECTRICAL EQUIPMENT RACK
4. 4#14 AND (1) ETHERNET CABLE IN 1" CONDUIT TO SCADA PANEL ON ELECTRICAL EQUIPMENT RACK
5. 2#12 AND #12 GND. IN 1" CONDUIT TO PUMP CONTROL PANEL ON ELECTRICAL EQUIPMENT RACK
6. 2#12 AND #12 GND. IN 1" CONDUIT TO SITE LIGHT
7. 4#14 IN 1" CONDUIT FOR EACH L/O/R SELECTOR BUTTON TO CONTROL PANEL ON ELECTRICAL RACK.
8. 4#14 IN 1" CONDUIT TO PUMP CONTROL PANEL.
9. 2#14 IN 1" CONDUIT TO ATS ON ELECTRICAL EQUIPMENT RACK.

No.	Revisions	Date	By
2	BID ADDENDUM #6	4/30/2026	JAH
1	BID ADDENDUM #5	4/16/2026	JAH

Kimley»Horn
© 2026 KIMLEY-HORN AND ASSOCIATES, INC.
200 CENTRAL AVENUE, SUITE 600
ST. PETERSBURG, FL 33701
P. 727 547 3999
WWW.KIMLEY-HORN.COM REGISTRY NO. 35106

DESIGN ENGINEER:
JASON A. HOYT, P.E.
FL LICENSE NUMBER
101453
DATE:

SCALE: AS NOTED
DESIGN: EBW
DRAWN: RG
CHECKED: JAH

LIFT STATION 7 REHABILITATION
ELECTRICAL SITE PLAN

CITY OF ST. PETE BEACH
LIFT STATION 07
REHABILITATION
PID# PS26-401-608-00
FLORIDA
PINELLAS COUNTY

DATE:
APRIL 2026

PROJECT NO.
148404108

SHEET NUMBER
E-02

EXHIBIT "C"

Vendor Bid/Proposal

(Place Vendor's Bid/Proposal Behind this Page)

PROPOSAL SUBMISSION

Wastewater Lift Stations Rehabilitation

PID #PS26-401-608-00

SUBMITTED TO

City of St. Pete Beach

155 Corey Avenue
St. Pete Beach, FL 33706

BID DUE DATE

May 6, 2026 — 9:00 AM

Electronic Submission via Bonfire

PREPARED BY

Tim Norwood

Senior Estimator | Authorized Agent

Cell: (813) 503-0528

I. CONTRACTOR'S BID SUBMITTAL

The company that is submitting a bid declares that it has extensive experience in **Wastewater Lift Stations Rehabilitation.**

The undersigned, as Bidder, hereby declares that the only person or persons interested in the Bid as principal or principals are named herein, and that no person other than herein mentioned has any interest in the Bid or in the Agreement to be entered into; that this Bid or Agreement is made without connection with any other person, company, or parties making a Bid; and that it is in all respects fair and in good faith without collusion or fraud.

The Bidder further declares that they have examined the site of the work and informed themselves fully in regard to all conditions pertaining to the place where the work is to be done; that they have examined the Plans and Specifications for the work and Contract Documents relative thereto, and have read all special provisions furnished prior to the opening of bids; and that they have satisfied themselves relative to the materials to be supplied and work to be performed.

The Bidder proposes and agrees, if the Bid is accepted, to contract with the City of St. Pete Beach, Florida, in the form of an Agreement specified for **"Wastewater Lift Stations Rehabilitation"** in St. Pete Beach, Florida, in full and complete accordance with the shown, noted, described, and reasonably intended requirements of the Plans, Specifications, and Contract Documents, to the full and entire satisfaction of the City of St. Pete Beach, Florida.

The Bidder proposes to furnish all materials, equipment, labor, and perform the work submitted in their bid schedule for the City of St. Pete Beach **" Wastewater Lift Stations Rehabilitation."**

COMPANY: MARLOF ENVIRONMENTAL DATE: 5/5/2026

ADDRESS: 9930 ELOE DR, NEW PORT RICHEY, FL, 34654 PHONE: 813-503-0528

BIDDER: _____ NAME: Tim Norwood / Estimator / Auth Agent
(SIGNATURE) *(PRINT NAME & TITLE)*

STATE OF FLORIDA
COUNTY OF Pasco

The foregoing instrument was sworn to (or affirmed), subscribed, and acknowledged before me **by means of ☑ physical presence or ☐ online notarization**, this 6 day of May, 2026, by Tim Norwood, who is personally known to me or has produced _____ as identification.

(SEAL)

Notary Public State of Florida
Valerie Burke
My Commission HH 775207
Expires 3/4/2030

_____
Notary Public – State of Florida

Valerie Burke
(Print, Type, Stamp, or Commissioned Name of Notary Public)

SUBMIT BID TO:

Electronically via Bonfire Only

Prepared By:
Kimley»Horn

BID FORM
CITY OF ST. PETE BEACH
PUMP & LIFT STATION REHABILITATIONS - PID# PS26-401-608-00
ADDENDUM #5

ITEM	DESCRIPTION	EST. QTY.	U/M	BID PRICE PER UNIT ($)	TOTAL BID PRICE ($)
I. MISCELLANEOUS					
1	Mobilization	1	LS	—	127,780
2	Maintenance of Traffic	1	LS	—	146,500
3	Erosion and Sediment Control	1	LS	—	32,000
4	Bypass Pumping	1	LS	—	190,150.02
5	Project Record Documents (As-Builts + O&M)	1	LS	—	81,000
				SUBTOTAL	577,930.02
II. LS #04 REHABILITATION					
6	Cleaning Existing Valve Vault Including Removal of Debris and Sand Blasting and Recoating of Existing Fittings	1	LS	—	6,300
7	Electrical Equipment Rack Including Pump Control Panel (5 HP - 7.5 HP), Meter, Main Disconnect, Automatic Transfer Switch, Junction Box, and Relocation of SCADA Panel	1	LS	—	36,096.48
9	Elevated Platform	1	LS	—	41,000
10	Backup Generator, Enclosure, and Sub-Base Fuel Tank	1	LS	—	235,585
11	Site Lighting	1	LS	—	10,500
12	6 Feet Tall Vinyl Privacy Fence	100	LF	130.69	13,069.
13	6 Feet Tall, 4 Feet Wide Vinyl Privacy Access Gate	1	LS	—	5,390
14	Curb Installation	70	LF	109.20	7,644
15	Potable Water Service and Hose Bib Relocation	1	LS	—	11,400
16	Demolition	1	LS	—	31,264
24	Shell Restoration	20	CY	91	1,820
				SUBTOTAL	500,505.48
III. LS #05 REHABILITATION					
6	Cleaning Existing Valve Vault Including Removal of Debris and Sand Blasting and Recoating of Existing Fittings	1	LS	—	6,300
17	Electrical I&C (5 HP - 7.5 HP Pump Control Panel Replacement)	1	LS	—	50,177.88
				SUBTOTAL	56,477.68
V. LS #09 REHABILITATION					
6	Cleaning Existing Valve Vault Including Removal of Debris and Sand Blasting and Recoating of Existing Fittings	1	LS	—	6,300
17	Electrical I&C (5 HP - 7.5 HP Pump Control Panel Replacement)	1	LS	—	50,177.63
				SUBTOTAL	75,077.63
VI. LS #10 REHABILITATION					
6	Cleaning Existing Valve Vault Including Removal of Debris and Sand Blasting and Recoating of Existing Fittings	1	LS	—	6,300
19	Clean Wetwell Including Sand/Debris Pump Out	1	LS	—	4,800
20	2" S.S. Air Release Valve (Above Ground)	1	LS	—	13,200
21	Force Main Detectable Warning Tape Replacement	35	LF	39.20	1,372
8	Electrical Equipment Rack Including Pump Control Panel (12 HP with VFD), Meter, Main Disconnect, Automatic Transfer Switch, Junction Box, and Relocation of SCADA Panel	1	LS	—	117,367.19
9	Elevated Platform	1	LS	—	41,000
10	Backup Generator, Enclosure, and Sub-Base Fuel Tank	1	LS	—	235,585
11	Site Lighting	1	LS	—	10,500
12	6 Feet Tall Vinyl Privacy Fence	125	LF	130.55	16,318.75
22	6 Feet Tall, 12 Feet Wide Vinyl Privacy Double Gate	1	LS	—	5,482
23	Reclaimed Water Service and Hose Bib Relocation	1	LS	—	11,900
16	Demolition	1	LS	—	26,564
				SUBTOTAL	501,008.94
VII. LS #11 REHABILITATION					
6	Cleaning Existing Valve Vault Including Removal of Debris and Sand Blasting and Recoating of Existing Fittings	1	LS	—	6,300
19	Clean Wetwell Including Sand/Debris Pump Out	1	LS	—	4,800
17	Electrical I&C (5 HP - 7.5 HP Pump Control Panel Replacement)	1	LS	—	50,177.88
				SUBTOTAL	61,277.88
VIII. LS #12 REHABILITATION					
6	Cleaning Existing Valve Vault Including Removal of Debris and Sand Blasting and Recoating of Existing Fittings	1	LS	—	6300
17	Electrical I&C (5 HP - 7.5 HP Pump Control Panel Replacement)	1	LS	—	50,177.88
				SUBTOTAL	56,477.88
IX. LS #13 REHABILITATION					
6	Cleaning Existing Valve Vault Including Removal of Debris and Sand Blasting and Recoating of Existing Fittings	1	LS	—	6300
17	Electrical I&C (5 HP - 7.5 HP Pump Control Panel Replacement)	1	LS	—	50,177.88

Prepared By:
Kimley»Horn

				SUBTOTAL	
X. LS #14 REHABILITATION					
6	Cleaning Existing Valve Vault Including Removal of Debris and Sand Blasting and Recoating of Existing Fittings	1	LS	–	6,300
17	Electrical I&C (5 HP - 7.5 HP Pump Control Panel Replacement)	1	LS	–	50,177.83
				SUBTOTAL	56,477.83
XI. LS #15 REHABILITATION					
6	Cleaning Existing Valve Vault Including Removal of Debris and Sand Blasting and Recoating of Existing Fittings	1	LS	–	6300
17	Electrical I&C (5 HP - 7.5 HP Pump Control Panel Replacement)	1	LS	–	50,177.83
				SUBTOTAL	56,477.83
XII. SW LS #35 REHABILITATION					
18	Electrical I&C (35 HP Pump Control Panel Replacement with Soft Starter)	1	LS	–	72,721.82
				SUBTOTAL	72,721.82
XIII. LS #07 REHABILITATION					
6	Cleaning Existing Valve Vault Including Removal of Debris and Sand Blasting and Recoating of Existing Fittings	1	LS	–	6300
7	Electrical Equipment Rack Including Pump Control Panel (5 HP - 7.5 HP With VFD), Automatic Transfer Switch, Junction Box, and Relocation of SCADA Panel, Pump Controller Switch	1	LS	–	103,937.28
9	Elevated Platform	1	LS	–	91,000
10	Backup Generator, Enclosure, and Sub-Base Fuel Tank	1	LS	–	235,385
11	Site Lighting	1	LS	–	10,500
12	6 Feet Tall Vinyl Privacy Fence	100	LF	130.69	13,069
13	6 Feet Tall, 4 Feet Wide Vinyl Privacy Access Gate	1	LS	–	5348
16	Demolition	1	LS	–	27,600
25	Sidewalk Replacement	10	SY	95	1350
26	Landscaping	1	LS	–	3750
27	Irrigation System	1	LS	–	10,080
XV. Pump Station 2 Flow Meter Replacement					
28	Flow Meter Replacement (Simens Sitrans F Series) including Conduit, Wire, Transmitter, and Associated Appurtenance	1	LS	–	37,404.46
				SUBTOTAL	37,404.46
XV. Pump Station 3 Flow Meter Replacement					
28	Flow Meter Replacement (Simens Sitrans F Series) including Conduit, Wire, Transmitter, and Associated Appurtenance	1	LS	–	37,404.46
				SUBTOTAL	37,404.46
				I. MISCELLANEOUS	577,430.02
				II. THROUGH XV. SUBTOTAL	2,101,481.13
				CONTINGENCY (10%)	267,841.16
				BID TOTAL	2,946,302.32

TOTAL: 513,591.00

5/5/26

V. PUBLIC ENTITY CRIMINAL AFFIDAVIT

SWORN STATEMENT – PUBLIC ENTITY CRIMES

PURSUANT TO § 287.133 (3)(a), FLORIDA STATUTES, ON PUBLIC ENTITY CRIMES
THE FORM MUST BE SIGNED AND SWORN TO IN THE PRESENCE OF A NOTARY PUBLIC OR OTHER OFFICIAL AUTHORIZED TO ADMINISTER OATHS.

1. This sworn statement is submitted to: City of St. Pete Beach

by: Michael Morgan
(Print individual's name and title)

for: Marolf Enironmental LLC
(Print name of entity submitting sworn statement)

at: 4430 Erie Dr, New Port Richey, FL, 34652
(Business address)

and (if applicable), its Federal Employer Identification Number (FEIN):

59-341-3447
(FEIN)

or, if the entity has no FEIN, include the Social Security Number:

(SSN)

by the individual signing this sworn statement:

(Signature)

2. I understand that a "public entity crime" as defined in § 287.133 (1)(g), Fla. Stat., means a violation of any State or Federal law by a person with respect to and directly related to the transaction of business with any public entity or with an agency or political subdivision of any other state or of the United States including, but not limited to, any bid or contract for goods or services, any lease for real property, or any contract for the construction or repair of a public building or public work, involving antitrust, fraud, theft, bribery, collusion, racketeering, conspiracy, or material misrepresentation.

3. I understand that "convicted" or "conviction" as defined in § 287.133 (1)(b), Fla. Stat., means a finding of guilt or a conviction of public entity crime with or without an adjudication of guilt in any Federal or State trial court of record relating to charges brought by indictment or information after July 1, 1989, as a result of a jury verdict, non-jury trial, or entry of a plea of guilty or nolo contendere.

4. I understand that an "affiliate" as defined in § 287.133 (1)(a), Fla. Stat., means:
   a. A predecessor or successor of a person convicted of a public entity crime or
   b. An entity under the control of any natural person who is active in the management of the entity and who has been convicted of a public entity crime. The term "affiliate" includes those officers, directors, executives, partners, shareholders, employees, members, and agents who are active in the management of an affiliate. The ownership by one (1) person of shares constituting a controlling interest in another person or a pooling of equipment or income among persons when not for fair market value under the arm's length agreement, shall be a prima facie case that one (1) person controls another person. A person who

knowingly enters into a joint venture with a person who has been convicted of a public crime in Florida during the preceding thirty-six (36) months shall be considered an affiliate.

5. I understand that a "person" as defined in Section 287.133 (1)(e), Fla. Stat., means any natural person or any entity organized under the laws of any state or of the United States with the legal power to enter into a binding contract and which bids or applies to bid on contracts let by a public entity, or which otherwise transacts or applies to transact business with a public entity. The term "person" includes those officers, directors, executives, partners, shareholders, employees, members, and agents who are active in management of an entity.

6. Based on information and belief, the **statement which I have marked below is true** in relation to the entity submitting this sworn statement (indicate which statement applies).

☑ Neither the entity submitting this sworn statement, nor any of its officers, directors, executives, partners, shareholders, employees, members, or agents who are active in the management of the entity nor any affiliate of the entity has been charged with and convicted of a public entity crime subsequent to July 1, 1989.

☐ The entity submitting this sworn statement or one (1) or more of its officers, directors, executives, partners, shareholders, employees, members, or agents who are active in the management of the entity or an affiliate of the entity has been charged with and convicted of a public entity crime subsequent to July 1, 1989.

☐ The entity submitting this sworn statement or one (1) or more of its officers, directors, executives, partners, shareholders, employees, members, or agents who are active in the management of the entity or an affiliate of the entity has been charged with and convicted of a public entity crime subsequent to July 1, 1989. However, there has been a subsequent proceeding before a Hearing Office of the State of Florida, Division of Administrative Hearings and the Final Order entered by the Hearing Officer determined that it was not in the public interest to place the entity submitting this sworn statement on the convicted vendor list (attach a copy of the final order).

I UNDERSTAND THAT THE SUBMISSION OF THIS FORM TO THE CONTRACTING OFFICE FOR THE PUBLIC ENTITY IDENTIFIED IN PARAGRAPH 1 ABOVE IS FOR THE PUBLIC ENTITY ONLY AND THAT THIS FORM IS VALID THROUGH DECEMBER 31 OF THE CALENDAR YEAR IN WHICH IT IS FILED. I ALSO UNDERSTAND THAT I AM REQUIRED TO INFORM THE PUBLIC ENTITY PRIOR TO ENTERING INTO A CONTRACT IN EXCESS OF THE THRESHOLD AMOUNT PROVIDED IN SECTION 287.017, FLORIDA STATUTES, FOR CATEGORY TWO OF ANY CHANGE IN THE INFORMATION CONTAINED IN THIS FORM.

STATE OF FLORIDA
COUNTY OF Pasco

The foregoing instrument was sworn to (or affirmed), subscribed, and acknowledged before me **by means of ☑ physical presence or ☐ online notarization**, this 5 day of May, 2026, by Michael Morgan, who is personally known to me or has produced N/A as identification.

(SEAL)

DENISE J. STEMAC
Notary Public
State of Florida
Comm# HH668652
Expires 4/23/2029

Notary Public – State of Florida

Denise J. Stemac
(Print, Type, Stamp, or Commissioned Name of Notary Public)

CERTIFICATE OF LIABILITY INSURANCE

DATE (MM/DD/YYYY): 4/10/2026

THIS CERTIFICATE IS ISSUED AS A MATTER OF INFORMATION ONLY AND CONFERS NO RIGHTS UPON THE CERTIFICATE HOLDER. THIS CERTIFICATE DOES NOT AFFIRMATIVELY OR NEGATIVELY AMEND, EXTEND OR ALTER THE COVERAGE AFFORDED BY THE POLICIES BELOW. THIS CERTIFICATE OF INSURANCE DOES NOT CONSTITUTE A CONTRACT BETWEEN THE ISSUING INSURER(S), AUTHORIZED REPRESENTATIVE OR PRODUCER, AND THE CERTIFICATE HOLDER.

IMPORTANT: If the certificate holder is an ADDITIONAL INSURED, the policy(ies) must have ADDITIONAL INSURED provisions or be endorsed. If SUBROGATION IS WAIVED, subject to the terms and conditions of the policy, certain policies may require an endorsement. A statement on this certificate does not confer rights to the certificate holder in lieu of such endorsement(s).

PRODUCER Wallace Welch & Willingham, Inc. 300 1st Ave S, 5th Floor St. Petersburg FL 33701	**CONTACT NAME:** **PHONE (A/C, No, Ext):** 727-522-7777 **FAX (A/C, No):** 727-521-2902 **E-MAIL ADDRESS:** certificates@w3ins.com
INSURED MAROENV-01 Marolf Environmental, LLC 4430 Erie Dr New Port Richey FL 34652	**INSURER(S) AFFORDING COVERAGE** / **NAIC #** **INSURER A :** FCCI Insurance Company — 10178 **INSURER B :** Westchester Surplus Lines Insurance Company — 10172 **INSURER C :** Brierfield Insurance Company — 10993 **INSURER D :** **INSURER E :** **INSURER F :**

COVERAGES **CERTIFICATE NUMBER:** 227369907 **REVISION NUMBER:**

THIS IS TO CERTIFY THAT THE POLICIES OF INSURANCE LISTED BELOW HAVE BEEN ISSUED TO THE INSURED NAMED ABOVE FOR THE POLICY PERIOD INDICATED. NOTWITHSTANDING ANY REQUIREMENT, TERM OR CONDITION OF ANY CONTRACT OR OTHER DOCUMENT WITH RESPECT TO WHICH THIS CERTIFICATE MAY BE ISSUED OR MAY PERTAIN, THE INSURANCE AFFORDED BY THE POLICIES DESCRIBED HEREIN IS SUBJECT TO ALL THE TERMS, EXCLUSIONS AND CONDITIONS OF SUCH POLICIES. LIMITS SHOWN MAY HAVE BEEN REDUCED BY PAID CLAIMS.

INSR LTR	TYPE OF INSURANCE	ADDL INSD	SUBR WVD	POLICY NUMBER	POLICY EFF (MM/DD/YYYY)	POLICY EXP (MM/DD/YYYY)	LIMITS	
B	X **COMMERCIAL GENERAL LIABILITY** [ ] CLAIMS-MADE [X] OCCUR GEN'L AGGREGATE LIMIT APPLIES PER: [ ] POLICY [X] PRO-JECT [ ] LOC [ ] OTHER:			G48894616001	6/1/2025	6/1/2026	EACH OCCURRENCE DAMAGE TO RENTED PREMISES (Ea occurrence) MED EXP (Any one person) PERSONAL & ADV INJURY GENERAL AGGREGATE PRODUCTS - COMP/OP AGG	$ 1,000,000 $ 100,000 $ 10,000 $ 1,000,000 $ 2,000,000 $ 2,000,000
C	**AUTOMOBILE LIABILITY** X ANY AUTO [ ] OWNED AUTOS ONLY [ ] SCHEDULED AUTOS X HIRED AUTOS ONLY X NON-OWNED AUTOS ONLY			CA10009477101	8/14/2025	8/14/2026	COMBINED SINGLE LIMIT (Ea accident) BODILY INJURY (Per person) BODILY INJURY (Per accident) PROPERTY DAMAGE (Per accident)	$ 1,000,000 $ $ $
B	[ ] **UMBRELLA LIAB** X OCCUR X **EXCESS LIAB** [ ] CLAIMS-MADE [ ] DED [ ] RETENTION $			G48894768001	6/1/2025	6/1/2026	EACH OCCURRENCE AGGREGATE	$ 5,000,000 $ 5,000,000
A	**WORKERS COMPENSATION AND EMPLOYERS' LIABILITY** ANYPROPRIETOR/PARTNER/EXECUTIVE OFFICER/MEMBER EXCLUDED? Y / N: N **(Mandatory in NH)** If yes, describe under DESCRIPTION OF OPERATIONS below	N / A		WC010009477201	8/14/2025	8/14/2026	X PER STATUTE [ ] OTH-ER E.L. EACH ACCIDENT E.L. DISEASE - EA EMPLOYEE E.L. DISEASE - POLICY LIMIT	$ 1,000,000 $ 1,000,000 $ 1,000,000
B B	Professional Liability Pollution Liability			G48894616001 G48894616001	6/1/2025 6/1/2025	6/1/2026 6/1/2026	Occurrence/Aggregate Occurrence/Aggregate	$1M/$2M $1M/$2M

DESCRIPTION OF OPERATIONS / LOCATIONS / VEHICLES (ACORD 101, Additional Remarks Schedule, may be attached if more space is required)
RE: Project - Royal Country PSO #100A Lift Station Upgrades

CERTIFICATE HOLDER

Sun Communities, Inc.
27777 Franklin Road #300
Southfield MI 48034

CANCELLATION

SHOULD ANY OF THE ABOVE DESCRIBED POLICIES BE CANCELLED BEFORE THE EXPIRATION DATE THEREOF, NOTICE WILL BE DELIVERED IN ACCORDANCE WITH THE POLICY PROVISIONS.

AUTHORIZED REPRESENTATIVE



© 1988-2015 ACORD CORPORATION. All rights reserved.

Detail by Entity Name

Florida Limited Liability Company
MAROLF ENVIRONMENTAL LLC

Filing Information

Document Number	L24000333843
FEI/EIN Number	59-3413447
Date Filed	08/01/2024
Effective Date	04/08/1996
State	FL
Status	ACTIVE
Last Event	CONVERSION
Event Date Filed	08/01/2024
Event Effective Date	NONE

Principal Address

4430 ERIE DRIVE
NEW PORT RICHEY, FL 34652

Mailing Address

4430 ERIE DRIVE
NEW PORT RICHEY, FL 34652

Registered Agent Name & Address

Marass, Josh, Marolf Environmental LLC
4430 ERIE DRIVE
NEW PORT RICHEY, FL 34652

Name Changed: 06/23/2025

Authorized Person(s) Detail

Name & Address

Title Manager

Dane Wastewater LLC
4430 ERIE DRIVE
NEW PORT RICHEY, FL 34652

Title Manager

Marass, Joshua
4430 ERIE DRIVE
NEW PORT RICHEY, FL 34652

Title COO, Authorized Representative

Dahlstrom, William
4430 ERIE DRIVE
NEW PORT RICHEY, FL 34652

Title Authorized Representative

Morgan, Michael
4430 ERIE DRIVE
NEW PORT RICHEY, FL 34652

Title Authorized Representative

Mayville, Andrew
4430 ERIE DRIVE
NEW PORT RICHEY, FL 34652

Title A, Authorized Representative

Williams, Michael
4430 ERIE DRIVE
NEW PORT RICHEY, FL 34652

Title Authorized Representative

Fraize, Donald
4430 ERIE DRIVE
NEW PORT RICHEY, FL 34652

Annual Reports

Report Year	Filed Date
2025	03/17/2025
2025	06/23/2025
2026	03/05/2026

Document Images

03/05/2026 -- ANNUAL REPORT	View image in PDF format
06/23/2025 -- AMENDED ANNUAL REPORT	View image in PDF format
03/17/2025 -- ANNUAL REPORT	View image in PDF format
08/01/2024 -- Florida Limited Liability	View image in PDF format

VI. NON-COLLUSION AFFADAVIT

STATE OF Florida
COUNTY OF Pasco

I state that I Michael Morgan (Name and Title) of Marolf Environmental LLC (Name of Firm), am authorized to make this affidavit on behalf of my firm and its owner, directors and officers. I am the person responsible in my firm for the price(s) and amount(s) of this Response, and the preparation of the Response. I state that:

1. The price(s) and amount(s) of this Response have been arrived at independently and without consultation, communication or agreement with any other Provider, potential provider, Proposal, or potential Proposal.

2. Neither the price(s) nor the amount(s) of this Response, and neither the approximate price(s) nor approximate amount(s) of this Response, have been disclosed to any other firm or person who is a Provider, potential Provider, Proposal, or potential Proposal, and they will not be disclosed before Proposal opening.

3. No attempt has been made or will be made to induce any firm or persons to refrain from submitting a Response for this contract, or to submit a price(s) higher that the prices in this Response, or to submit any intentionally high or noncompetitive price(s) or other form of complementary Response.

4. The Response of my firm is made in good faith and not pursuant to any agreement or discussion with, or inducement from, any firm or person to submit a complementary or other noncompetitive Response.

5. Marolf, its affiliates, subsidiaries, officers, director, and employees (Name of Firm) are not currently under investigation, by any governmental agency and have not in the last three years been convicted or found liable for any act prohibited by State or Federal law in any jurisdiction, involving conspiracy or collusion with respect to Proposal, on any public contract, except as follows:

I state that I and the named firm understand and acknowledge that the above representations are material and important, and will be relied on by the State of Florida for which this Response is submitted. I understand and my firm understands that any misstatement in this affidavit is, and shall be treated as, fraudulent concealment from the State of Florida of the true facts relating to the submission of responses for this contract.

Name of Organization: Marolf Environmental LLC

Signed By: [signature]

Print Name: Michael Morgan

The foregoing instrument was sworn to (or affirmed), subscribed, and acknowledged before me **by means of ☒ physical presence or ☐ online notarization**, this 5 day of May, 2026, by Michael Morgan, who is personally known to me or has produced N/A as identification.

(SEAL)

DENISE J. STEMAC
Notary Public
State of Florida
Comm# HH668652
Expires 4/23/2029

[signature]
Notary Public – State of Florida

Denise J. Stemac
(Print, Type, Stamp, or Commissioned Name of Notary Public)

PROJECT NAME: City of Carrabelle Lift Station & Wastewater Improvements

OWNER'S NAME: City of Carrabelle

CONTACT: Charlie Porter | **Phone/Email:** carrabellecharlie@yahoo.com/850-528-0628

PROJECT DESCRIPTION: Multiple scopes of wastewater infrastructure work including: demolition and replacement of existing lift station platform with 8'x8' aluminum platform with concrete bases; installation of aluminum stairs with concrete landing; installation of aluminum hopper stand and pump stands; manhole seam injection grouting (6 manholes); installation of Vulcan Model SS-96 316 Stainless Steel Stato Screen; and associated piping and materials work at the Lanark Lift Station and WWTP.

ORIGINAL CONTRACT AMOUNT: $390,383.95 over one year period

FINAL CONTRACT AMOUNT: $390,383.95 over one year period

NUMBER AND DOLLAR AMOUNT OF CHANGE ORDERS: None on record

ORIGINAL CONTRACT TIME: *Completed within contract period*

ACTUAL TIME TO COMPLETE: *Completed within contract period*

OTHER RELEVANT INFORMATION: Work performed over a year long period. Other work performed for the city over the years. Included installation of aluminum platforms and stairs.

PROJECT NAME: Hernando County Utilities – Burger King Lift Station

OWNER'S NAME: Deeb Construction/Hernando County Utilities

CONTACT: Paul Taylor | **PHONE:** (727) 919-1252 | ptaylor.deeb@yahoo.com

PROJECT DESCRIPTION: Full lift station rehabilitation at 6450 Nature Coast Blvd, Ridge Manor, FL 34602 for Hernando County Utilities. Work included removal of existing piping and installation of new 6" PVC C900 piping, check valves, 8" MJ gate valve with box and brass tag, new HCUD pump bases with base plates, intermediate guide rails, gauge assembly, link seals, and 10" SCH-40 sleeve. Scope also included electric bypass pump with diesel backup, electrical contractor services, data flow RTU, wet well and manhole coatings/liner, and all associated demo and freight. Marolf Environmental served as subcontractor to Deeb Construction & Development (General Contractor).

ORIGINAL CONTRACT AMOUNT: $ 359,163.24

FINAL CONTRACT AMOUNT: $448,954.05

NUMBER AND DOLLAR AMOUNT OF CHANGE ORDERS:2/$89,790.81

ORIGINAL CONTRACT TIME: 140 days from NTP

ACTUAL TIME TO COMPLETE: *Completed within contract period*

OTHER RELEVANT INFORMATION: Project issued under Hernando County Contract No. 23-T00040/AP. County contact: Larry Cooper, (352) 754-4773. Included electric bypass pump with diesel backup

PROJECT NAME: On Top of the World – South Wastewater Treatment Facility (SWWTF) Equalization Basin Construction

OWNER'S NAME: Bay Laurel Center Community Development District (BLCCDD)

CONTACT: Bryan Schmalz, Utility Director | **PHONE:** (352) 414-5454 x4105 | bryan_schmalz@blccdd.com

PROJECT DESCRIPTION: Construction of a 250,000-gallon concrete watertight flow equalization basin connecting to the west side of the existing Wastewater Treatment Plant No. 1 at 8851 SW 90th Street, Ocala, FL 34481. Work included all electrical systems, mechanical equipment, and yard piping. Scope consisted of: two 25 HP surge pumps with SS guide rail system, two 40 HP Heliflow blowers, aluminum tank covers with stainless steel hardware, bypass HDPE pump piping, DR-18 PVC force main, 8" SDR-26 PVC sanitary sewer lines, mag meters, plug and check valves, aluminum knee brackets, chain link fencing, grading, compaction, concrete testing, odor control slab, and demolition of existing facade. Marolf Environmental served as prime contractor.

ORIGINAL CONTRACT AMOUNT: $ 670,200.70

FINAL CONTRACT AMOUNT: $670,200.70

NUMBER AND DOLLAR AMOUNT OF CHANGE ORDERS: None on Record

ORIGINAL CONTRACT TIME: Services to begin immediately upon execution — June 30, 2022

ACTUAL TIME TO COMPLETE: *Completed within contract period*

OTHER RELEVANT INFORMATION: Contract executed June 30, 2022 with Bay Laurel Center CDD, a special purpose government entity. Engineer of record: Kimley-Horn. Included bypass HDPE pump piping

PROJECT NAME: Safety Harbor Club – Wastewater Treatment Facility & Lift Station Rehabilitation (Job #3288)

OWNER'S NAME: Safety Harbor Club, Inc.

CONTACT: Tom Hart | **PHONE:**404-303-1087

PROJECT DESCRIPTION: Full wastewater treatment facility construction and dual lift station rehabilitation at Safety Harbor Club, Upper Captiva Island, FL. WWTF scope included Marolf-manufactured 15,000-gallon extended aeration Class-3 precast concrete WWTP with tertiary filter system, surge pumps, PD blowers, chlorine feed system, aluminum handrail and stairway, aluminum grating, site work, excavation, demo of existing plant, freight via barge to island, startup, and O&M manuals. Lift Station rehab scope covered two lift stations with duplex submersible pumps, SS control panels, bypass pumping, PVC piping, float switches, and electrical wiring. Engineer of record: McDonald Group International, Inc. Marolf Environmental served as prime contractor.

ORIGINAL CONTRACT AMOUNT: $941,132.00

FINAL CONTRACT AMOUNT: $941,132.00

NUMBER AND DOLLAR AMOUNT OF CHANGE ORDERS: None on Record

ORIGINAL CONTRACT TIME: 150 days from mobilization on site (contract dated July 1, 2022)

ACTUAL TIME TO COMPLETE: Nov 27,2022

OTHER RELEVANT INFORMATION: Project located on Upper Captiva Island, materials delivered via barge from Pine Island/St. James City port. Both lift station rehabs included bypass pumping.

BID FORM
CITY OF ST. PETE BEACH
PUMP & LIFT STATION REHABILITATIONS - PID# PS26-401-608-00
ADDENDUM #5

ITEM	DESCRIPTION	EST. QTY.	U/M	BID PRICE PER UNIT ($)	TOTAL BID PRICE ($)
I. MISCELLANEOUS					
1	Mobilization	1	LS		$ 127,780.00
2	Maintenance of Traffic	1	LS		$ 146,500.00
3	Erosion and Sediment Control	1	LS		$ 32,000.00
4	Bypass Pumping	1	LS		190,150.02
5	Project Record Documents (As-Builts + O&M)	1	LS		$ 81,000.00
				SUBTOTAL	**$577,430.02**
II. LS #04 REHABILITATION					
6	Cleaning Existing Valve Vault Including Removal of Debris and Sand Blasting and Recoating of Existing Fittings	1	LS		$6,300.00
7	Electrical Equipment Rack Including Pump Control Panel (5 HP - 7.5 HP), Meter, Main Disconnect, Automatic Transfer Switch, Junction Box, and Relocation of SCADA Panel	1	LS		$86,046.48
9	Elevated Platform	1	LS		$91,000.00
10	Backup Generator, Enclosure, and Sub-Base Fuel Tank	1	LS		$235,585.00
11	Site Lighting	1	LS		$10,500.00
12	6 Feet Tall Vinyl Privacy Fence	100	LF		$13,069.00
13	6 Feet Tall, 4 Feet Wide Vinyl Privacy Access Gate	1	LS		$5,390.00
14	Curb Installation	70	LF		$7,644.00
15	Potable Water Service and Hose Bib Relocation	1	LS		$11,900.00
16	Demolition	1	LS		$31,250.80
24	Shell Restoration	20	CY		$1,820.00
				SUBTOTAL	**$500,505.28**
III. LS #05 REHABILITATION					
6	Cleaning Existing Valve Vault Including Removal of Debris and Sand Blasting and Recoating of Existing Fittings	1	LS		$6,300.00
17	Electrical I&C (5 HP - 7.5 HP Pump Control Panel Replacement)	1	LS		$50,177.88
				SUBTOTAL	**$56,477.88**
V. LS #09 REHABILITATION					
6	Cleaning Existing Valve Vault Including Removal of Debris and Sand Blasting and Recoating of Existing Fittings	1	LS		$6,300.00
17	Electrical I&C (5 HP - 7.5 HP Pump Control Panel Replacement)	1	LS		$48,778.00

				SUBTOTAL	**$55,077.78**
VI. LS #10 REHABILITATION					
6	Cleaning Existing Valve Vault Including Removal of Debris and Sand Blasting and Recoating of Existing Fittings	1	LS		$6,300.00
19	Clean Wetwell Including Sand/Debris Pump Out	1	LS		$4,900.00
20	2" S.S. Air Release Valve (Above Ground)	1	LS		$13,300.00
21	Force Main Detectable Warning Tape Replacement	35	LF		$1,372.00
8	Electrical Equipment Rack Including Pump Control Panel (12 HP with VFD), Meter, Main Disconnect, Automatic Transfer Switch, Junction Box, and Relocation of SCADA Panel	1	LS		$117,367.19
9	Elevated Platform	1	LS		$91,000.00
10	Backup Generator, Enclosure, and Sub-Base Fuel Tank	1	LS		$235,585.00
11	Site Lighting	1	LS		$10,500.00
12	6 Feet Tall Vinyl Privacy Fence	125	LF		$16,318.75
22	6 Feet Tall, 12 Feet Wide Vinyl Privacy Double Gate	1	LS		$5,922.00
23	Reclaimed Water Service and Hose Bib Relocation	1	LS		$11,900.00
16	Demolition	1	LS		$26,544.00
				SUBTOTAL	**$541,008.94**
VII. LS #11 REHABILITATION					
6	Cleaning Existing Valve Vault Including Removal of Debris and Sand Blasting and Recoating of Existing Fittings	1	LS		$6,300.00
19	Clean Wetwell Including Sand/Debris Pump Out	1	LS		$4,900.00
17	Electrical I&C (5 HP - 7.5 HP Pump Control Panel Replacement)	1	LS		$50,177.88
				SUBTOTAL	**$61,377.88**
VIII. LS #12 REHABILITATION					
6	Cleaning Existing Valve Vault Including Removal of Debris and Sand Blasting and Recoating of Existing Fittings	1	LS		$6,300.00
17	Electrical I&C (5 HP - 7.5 HP Pump Control Panel Replacement)	1	LS		$50,177.88
				SUBTOTAL	**$56,477.88**
IX. LS #13 REHABILITATION					
6	Cleaning Existing Valve Vault Including Removal of Debris and Sand Blasting and Recoating of Existing Fittings	1	LS		$6,300.00
17	Electrical I&C (5 HP - 7.5 HP Pump Control Panel Replacement)	1	LS		$50,177.88
				SUBTOTAL	**$56,477.88**
X. LS #14 REHABILITATION					
6	Cleaning Existing Valve Vault Including Removal of Debris and Sand Blasting and Recoating of Existing Fittings	1	LS		$6,300.00
17	Electrical I&C (5 HP - 7.5 HP Pump Control Panel Replacement)	1	LS		$50,177.88

				SUBTOTAL	**$56,477.88**
XI. LS #15 REHABILITATION					
6	Cleaning Existing Valve Vault Including Removal of Debris and Sand Blasting and Recoating of Existing Fittings	1	LS		$6,300.00
17	Electrical I&C (5 HP - 7.5 HP Pump Control Panel Replacement)	1	LS		$50,177.88
				SUBTOTAL	**$56,477.88**
XII. SW LS #35 REHABILITATION					
18	Electrical I&C (35 HP Pump Control Panel Replacement with Soft Starter)	1	LS		$72,721.82
				SUBTOTAL	**$72,721.82**
XIII. LS #07 REHABILITATION					
6	Cleaning Existing Valve Vault Including Removal of Debris and Sand Blasting and Recoating of Existing Fittings	1	LS		$6,300.00
7	Electrical Equipment Rack Including Pump Control Panel (5 HP - 7.5 HP With VFD), Automatic Transfer Switch, Junction Box, and Relocation of SCADA Panel, Pump Controller/Switch	1	LS		$103,937.08
9	Elevated Platform	1	LS		$91,000.00
10	Backup Generator, Enclosure, and Sub-Base Fuel Tank	1	LS		$235,585.00
11	Site Lighting	1	LS		$10,500.00
12	6 Feet Tall Vinyl Privacy Fence	100	LF		$13,069.00
13	6 Feet Tall, 4 Feet Wide Vinyl Privacy Access Gate	1	LS		$5,390.00
16	Demolition	1	LS		$27,650.00
25	Sidewalk Replacement	10	SY		$1,330.00
26	Landscaping	1	LS		$8,750.00
27	Irrigation System	1	LS		$10,080.00
				SUBTOTAL	**$513,591.08**
XIV. Pump Station 2 Flow Meter Replacement					
28	Flow Meter Replacement (Siemens Sitrans F Series) including Conduit, Wire, Transmitter, and Associated Appurtenance	1	LS		$37,404.46
				SUBTOTAL	**$37,404.46**
XV. Pump Station 3 Flow Meter Replacement					
28	Flow Meter Replacement (Siemens Sitrans F Series) including Conduit, Wire, Transmitter, and Associated Appurtenance	1	LS		$37,404.46
				SUBTOTAL	**$37,404.46**

I. MISCELLANEOUS	**$577,430.02**
II. THROUGH XV. SUBTOTAL	**$2,101,481.08**
CONTINGENCY (10%)	**$267,891.11**

BID TOTAL	**$2,946,802.22**

Note: Enter unit prices in the blue column (E). All other values calculate automatically.

EXHIBIT "D"

Conditional Federal/Grant-Funded Contract Addendum

(Place Conditional Federal/Grant-Funded Contract Addendum behind this page)

EXHIBIT "D"
CONDITIONAL FEDERAL/GRANT-FUNDED CONTRACT ADDENDUM

1. Applicability

1.1 This Exhibit applies only if activated under Section 25 of the Agreement or under a Task Order. If not activated, this Exhibit is reserved and has no operative effect.
1.2 If activated, this Exhibit supplements the Agreement and applies to the federally funded or grant-funded Work only. Contractor shall comply with all applicable requirements of the federal award, grant agreement, pass-through entity, program rules, and applicable law.
1.3 The City may provide additional award-specific clauses, certifications, forms, wage determinations, reporting requirements, or flow-down provisions. Contractor shall comply with such requirements as a condition of performing the affected Work and receiving payment from the applicable funding source.

2. Federal Award and Grant Information

Federal/Grant Program: [insert]
Federal Awarding Agency: [insert]
Pass-Through Entity: [insert, if applicable]
Assistance Listing Number: [insert, if applicable]
Federal Award Identification Number: [insert, if applicable]
Award or Disaster Declaration Date: [insert, if applicable]
Project Number: [insert]
Special Award Conditions: [insert or attach]

3. Remedies for Breach

For contracts exceeding the simplified acquisition threshold, Contractor acknowledges that the City may exercise all administrative, contractual, legal, and equitable remedies available under the Contract Documents and applicable law if Contractor violates or breaches contract terms. Remedies may include withholding payment, requiring correction, suspension of Work, termination, procurement from alternate sources, damages, sanctions, and any other appropriate remedy.

4. Termination for Cause and Convenience

For contracts in excess of $10,000, the City may terminate the federally funded or grant-funded Work for cause or convenience as provided in the Agreement. The notice of termination will identify the effective date and the manner of termination. Contractor shall be paid only for authorized Work satisfactorily performed before the effective date of termination, subject to documentation, offsets, allowable cost requirements, and applicable grant rules.

5. Equal Employment Opportunity

Except as otherwise provided under 41 C.F.R. Part 60, if the Work is a federally assisted construction contract as defined in 41 C.F.R. § 60-1.3, Contractor shall comply with the equal opportunity clause in 41 C.F.R. § 60-1.4(b), which is incorporated by reference as if fully set forth

RESERVED

herein, and shall include the required clause in covered subcontracts and purchase orders.

6. Davis-Bacon Act and Copeland Anti-Kickback Act

When required by federal program legislation, all prime construction contracts in excess of $2,000 must include compliance with the Davis-Bacon Act, 40 U.S.C. §§ 3141-3148, as supplemented by Department of Labor regulations at 29 C.F.R. Part 5. If Davis-Bacon applies, Contractor shall pay laborers and mechanics at rates not less than the applicable wage determination, pay wages not less than once per week, submit certified payrolls if required, and comply with all applicable labor standards.
If Davis-Bacon applies, Contractor shall also comply with the Copeland "Anti-Kickback" Act, 40 U.S.C. § 3145, as supplemented by 29 C.F.R. Part 3, and shall not induce any person employed in the construction, completion, or repair of public work to give up any part of compensation to which the person is entitled. Contractor shall report suspected or reported violations to the City.

7. Contract Work Hours and Safety Standards Act

Where applicable, for contracts in excess of $100,000 that involve the employment of mechanics or laborers, Contractor shall comply with 40 U.S.C. §§ 3702 and 3704, as supplemented by Department of Labor regulations at 29 C.F.R. Part 5. Contractor shall compute wages based on a standard 40-hour workweek and shall compensate covered workers at not less than one and one-half times the basic rate of pay for hours worked in excess of 40 hours in a workweek. No laborer or mechanic shall be required to work under unsanitary, hazardous, or dangerous conditions. These requirements do not apply to purchases of supplies, materials, or articles ordinarily available on the open market, or to contracts for transportation or transmission of intelligence.

8. Rights to Inventions

If the federal award meets the definition of "funding agreement" under 37 C.F.R. § 401.2(a), and the Work involves substitution of parties, assignment, or performance of experimental, developmental, or research work under that funding agreement, Contractor shall comply with 37 C.F.R. Part 401 and any implementing regulations issued by the awarding agency.

9. Clean Air Act and Federal Water Pollution Control Act

For contracts and subgrants exceeding $150,000, Contractor shall comply with all applicable standards, orders, and regulations issued pursuant to the Clean Air Act, 42 U.S.C. §§ 7401-7671q, and the Federal Water Pollution Control Act, 33 U.S.C. §§ 1251-1387. Contractor shall report each violation to the City, and the City will report violations as required to the federal awarding agency and the appropriate EPA regional office. Contractor shall include these requirements in each covered subcontract exceeding $150,000.

10. Debarment and Suspension

Contractor shall comply with Executive Orders 12549 and 12689 and 2 C.F.R. Part 180. Contractor shall not enter into covered transactions with parties listed on the governmentwide exclusions in the System for Award Management. Contractor shall verify that Contractor, its principals, and its affiliates are not excluded or disqualified and shall include this requirement in lower-tier covered

RESERVED

transactions.

11. Byrd Anti-Lobbying Amendment

For awards exceeding $100,000, Contractor shall comply with the Byrd Anti-Lobbying Amendment, 31 U.S.C. § 1352. Contractor shall certify that it has not and will not use federal appropriated funds to pay any person or organization for influencing or attempting to influence an officer or employee of an agency, a member of Congress, an officer or employee of Congress, or an employee of a member of Congress in connection with obtaining a federal contract, grant, or other covered award. Contractor shall disclose lobbying with non-federal funds as required and shall require each lower tier to make the same certification and disclosure.

12. Procurement of Recovered Materials

Contractor shall comply with 2 C.F.R. § 200.323 and Section 6002 of the Solid Waste Disposal Act, as amended by the Resource Conservation and Recovery Act, to the extent applicable. Contractor shall procure designated items containing the highest percentage of recovered materials practicable, consistent with competition and performance requirements, when the purchase price exceeds the applicable threshold or the value of the quantity acquired during the preceding fiscal year exceeded the applicable threshold. Contractor shall also procure solid waste management services in a manner that maximizes energy and resource recovery and shall support the City's affirmative procurement program where applicable.

13. Domestic Preferences for Procurements

As appropriate and to the extent consistent with law, Contractor shall comply with 2 C.F.R. § 200.322 by providing a preference for the purchase, acquisition, or use of goods, products, or materials produced in the United States, including iron, aluminum, steel, cement, and other manufactured products, when the Work is performed under a federal award.

14. Prohibition on Certain Telecommunications and Video Surveillance Equipment or Services

Contractor shall comply with 2 C.F.R. § 200.216 and shall not obligate or expend federal funds to procure, obtain, extend, renew, or enter into a contract to procure or obtain covered telecommunications equipment or services as a substantial or essential component of any system or as critical technology as part of any system. Contractor shall include this prohibition in applicable subcontracts and purchase orders.

15. Build America, Buy America

If the Work is an infrastructure project funded by a federal financial assistance program subject to the Build America, Buy America Act, Contractor shall comply with all applicable domestic content procurement preference requirements for iron, steel, manufactured products, and construction materials permanently incorporated into the project, unless a waiver applies. Contractor shall provide certifications, documentation, and product information required by the City, funding agency, or pass-through entity.

16. Small and Minority Businesses, Women's Business Enterprises, Veteran-Owned Businesses,

RESERVED

and Labor Surplus Area Firms

Contractor shall take the affirmative steps required by 2 C.F.R. § 200.321 to assure that small businesses, minority businesses, women's business enterprises, veteran-owned businesses, and labor surplus area firms are used when possible, including, as applicable, placing such businesses on solicitation lists, soliciting them when they are potential sources, dividing requirements when economically feasible, establishing delivery schedules that encourage participation, using appropriate assistance organizations, and requiring subcontractors to take the same affirmative steps.

17. Bonding Requirements for Federal Construction or Facility Improvement Contracts

For construction or facility improvement contracts or subcontracts exceeding the simplified acquisition threshold, Contractor shall comply with the bonding requirements in 2 C.F.R. § 200.326 when the federal award requires such bonding, including bid guarantee, performance bond, and payment bond requirements unless the federal agency or pass-through entity determines that the City's bonding policy and requirements adequately protect the federal interest.

18. Access to Records; Retention

Contractor shall provide the City, the federal awarding agency, the pass-through entity, the Comptroller General of the United States, and their authorized representatives access to any documents, papers, records, and other materials that are directly pertinent to the federal or grant-funded Work for the purpose of making audits, examinations, excerpts, and transcriptions. Contractor shall retain records for the period required by 2 C.F.R. Part 200, the award terms, the Agreement, and applicable law, whichever is longer.

19. No Obligation by Federal Government

The federal government is not a party to this Agreement or any Task Order and is not subject to any obligations or liabilities to the City, Contractor, or any other party arising from the Agreement or Work.

20. Program Fraud and False or Fraudulent Statements

Contractor acknowledges that 31 U.S.C. Chapter 38 and other federal laws concerning fraud, false claims, and false statements may apply to Contractor's actions pertaining to federally funded or grant-funded Work. Contractor shall not submit false, fictitious, fraudulent, or misleading claims, certifications, invoices, records, or statements.

21. Additional Award-Specific Terms

If the federal awarding agency, pass-through entity, grant agreement, disaster assistance program, or other funding source requires additional clauses, certifications, forms, reporting, wage determinations, environmental/historic preservation conditions, civil rights provisions, procurement certifications, or other requirements, such requirements are incorporated into the affected Task Order upon written notice by the City. Contractor shall execute additional documents reasonably required by the City to document compliance.

RESERVED

CITY COMMISSION MEETING
CITY OF ST. PETE BEACH
COMMISSION CHAMBERS

Agenda Report

Agenda Title Name: Final Reading of Ordinance 2026-11: Adopting an amendment to the sign ordinance to prohibit stakes, poles, piers, and other sign structures within 50 feet of the mean high or visible water line along the Gulf, specifying exceptions and permit requirements, and detailing standards for type, number, dimensions, density, and illumination of signs, along with removal requirements.

Action Request: Motion to [adopt/adopt with modification/deny/continue to [specify date certain]] Ordinance 2026-11.

Strategic Objective: Community Prosperity

Date: June 23, 2026

Prepared By: Ralf Brookes, City Attorney
Brandon Berry, Senior Planner

Through: Frances Robustelli, City Manager

Summary of Issue: This proposal is a modification of the ordinance approved by the City Commission at the first reading in April 2026. It makes the following major changes:

- Specifies required setbacks for signage on the beach to be 50 feet from the greater of the mean high or visible water line.
- Permits removable A-frame ("sandwich board") signs, only, on the beach outside of the prohibited distance, and sets standards for dimensions, prohibits illumination, specifies setbacks, and requires nightly removal.
- Requires a sign permit, including deed, title history and insurance, and survey depicting location, prior to placement of a sign on the beach.

Funding: N/A

Attachments:

1. Ordinance 2026-11 for second reading staff recommendation
2. Photo Examples Beach Signs within 50 ft
3. Effects of exposed pilings on sea turtle nesting activity at Melbourne Beach, Florida JOURNAL OF COASTAL RESEARCH Vol 14 (1988)

Ordinance 2026-11

AN ORDINANCE OF THE CITY OF ST. PETE BEACH, FLORIDA, AMENDING THE LAND DEVELOPMENT CODE RELATING TO SIGNS BY CREATING SUBSECTION 26.14.(w) TO PROHIBIT SIGNS, POSTS, AND POLES WITHIN FIFTY (50) FEET OF THE MEAN HIGH OR VISIBLE WATER LINE OF THE GULF; REQUIRING A PERMIT FOR INSTALLATION OF SIGNS ON THE BEACH; PROVIDING FOR RECITALS, CODIFICATION, CONFLICTS, SEVERABILITY, CORRECTION OF SCRIVENER'S ERRORS, CONSTRUCTION, PUBLICATION, AND AN EFFECTIVE DATE.

WHEREAS, the City of St. Pete Beach is a barrier-island community whose Gulf waters, beach, dunes, and adjacent public and private beachfront areas are central to the public health, safety, welfare, environment, scenic character, and economic vitality of the City; and

WHEREAS, certain signs have recently been placed in the water, adjacent to the water or within 50 feet of the mean high and 50 feet from the visible water line creating a threat to public safety because rebar, poles, posts and signs in this area can cause injury to persons and impact public safety both during the day but particularly after sunset in the dark, can interfere with emergency operations, beach management activities, impact environment, nesting habitat and can become windborne debris in storm events and create other public safety hazards; and

WHEREAS, the proliferation and number of signs, posts, and poles on the beach, particularly those located at, waterward, or 50 feet from the mean high tide line or 50 feet from the visible water line can obstruct and interfere with public safety, the environment, emergency operations and beach management activities, and in storm events can become windborne debris or create other hazards; and

WHEREAS, amendments to the sign code are necessary to regulate the location and number of post, poles, rebar, stakes and signs on the beach for the public health, safety and welfare

NOW, THEREFORE, THE CITY COMMISSION OF THE CITY OF ST. PETE BEACH, FLORIDA, HEREBY ORDAINS:

SECTION 1. Recitals. The above recitals ("Whereas" clauses) are hereby adopted as legislative findings, purpose, and intent of the City Commission.

SECTION 2. Land Development Code amendment. The Land Development Code of the City of St. Pete Beach is hereby amended to add a new Code subsection **26.14 (w)** as set forth in **Exhibit "A"** attached hereto and incorporated herein by reference.

SECTION 3. Codification. This Ordinance shall be codified in the Land Development Code of the City of St. Pete Beach.

SECTION 4. Conflicts. All ordinances or parts of ordinances in conflict herewith are hereby repealed to the extent of such conflict.

SECTION 5. Severability. The provisions of this Ordinance are declared to be severable, and if any section, sentence, clause, or phrase of this Ordinance shall for any reason be held invalid or unconstitutional, such decision shall not affect the validity of the remaining portions of this Ordinance.

SECTION 6. Scrivener's Error. The City Attorney may correct scrivener's errors found in this Ordinance by filing a corrected copy of this Ordinance with the City Clerk.

SECTION 7. Construction. This Ordinance shall be liberally construed to accomplish its purposes.

SECTION 8. Publication. This Ordinance shall be published in accordance with applicable law.

SECTION 9. Effective Date. This Ordinance shall take effect immediately upon adoption as provided by law.

EMERGENCY READING AND ADOPTION: _____, 2026
PUBLISHED: _____, 2026

CITY COMMISSION, CITY OF ST. PETE BEACH, FLORIDA.

_____
Scott Tate, Mayor

I, Renee Rose, City Clerk of the City of St. Pete Beach, Florida, do hereby certify that the foregoing Ordinance was duly adopted in accordance with applicable law this _____ day of _____, 2026.

_____
Renee Rose, City Clerk

APPROVED AS TO FORM AND LEGAL SUFFICIENCY:

_____
Ralf Brookes, City Attorney

EXHIBIT A

Words stricken through shall be deleted. Words underscored constitute the amendment proposed. The symbol *** constitutes code sections not shown for purposes of brevity.

Division 26 – Sign Ordinance

***

Sec. 26.14. - Prohibited signs.

The following signs and sign types are prohibited within the city limits.

***

(w) No temporary, portable, or permanent sign, stake, post, rebar or pole shall be installed, placed or maintained within 50 feet of the mean high water line (MHWL) or within 50 feet of visible water line of the Gulf whichever is greater, unless the sign, stake, post or pole is an official governmental locational sign, stake, post or pole that is posted by, or pursuant to the direction of, the State of Florida or another governmental entity with jurisdiction. Any sign, stake, post or pole in conflict with this prohibition shall be relocated to an allowable location. All other signage placed in other locations on the beach:

(1) shall be a portable A-frame or sandwich board sign that is no more than five (5) feet in height, eight (8) square footage in total sign face area,

(2) shall not contain any illumination of any kind and shall be removed at sunset and not replaced until sunrise each day;

(3) shall be placed at least 300 feet from any other sign, and at no time shall exceed four signs per zoning lot on the beach; and

(4) shall require a permit and submittal of a beach signage permit application that includes the property deed, title history, title insurance, and survey depicting sign location, property boundaries and the mean high water line (MHWL) in addition to the application requirements of section 26.5 of this Code.

This requirement is cumulative of, and not in lieu of, all other applicable provisions of this Code, however to the extent of a conflict, the requirements of this subsection apply.

***

Words stricken through shall be deleted. Words underscored constitute the amendment proposed. The symbol *** constitutes code sections not shown for purposes of brevity.


PRIVATE BEACH
PRIVATE PROPERTY
NO TRESPASSING
PRIVATE PROPERTY
NO ALCOHOL
NO COOLERS
NO TENTS
NO UMBRELLAS
NO CHAIRS
ALL BAGS
SUBJECT
TO SEARCH
NO PETS
NO DOGS OR PETS ARE ALLOWED


PRIVATE BEACH
PRIVATE PROPERTY
NO TRESPASSING
Undertow Beach Bar
St. Pete Beach, Inc.
PRIVATE PROPERTY
Undertow Private Beach
Undertow Beach Bar, St. Pete Beach, Inc.
NO ALCOHOL
NO COOLERS
NO TENTS
NO UMBRELLAS
NO CHAIRS
ALL BAGS
SUBJECT
TO SEARCH
NO PETS
NO DOGS OR PETS ARE ALLOWED


PRIVATE BEACH
PRIVATE PROPERTY
NO TRESPASSING
PRIVATE PROPERTY
NO ALCOHOL
NO COOLERS
NO TENTS
NO UMBRELLAS
NO CHAIRS


PRIVATE BEACH
UNDERTOW
PRIVATE PROPERTY
NO TRESPASSING
Undertow Beach Bar
St. Pete Beach, Inc.
PRIVATE PROPERTY
Undertow Private Beach
Undertow Beach Bar St. Pete Beach, Inc.
NO ALCOHOL
NO COOLERS
NO TENTS
NO UMBRELLAS
NO CHAIRS
ALL BAGS SUBJECT TO SEARCH
NO PETS
NO DOGS OR PETS ARE ALLOWED
Service dogs are trained to do work or perform a task for persons with diabilities.
Comfort and/or emotional support animals are not recognized by the ADA.
No Dogs or Pets
Service Animals Welcome


PRIVATE PROPERTY
NO TRESPASSING
Undertow Beach Bar
St. Pete Beach, Inc.
PRIVATE PROPERTY
Undertow
Private Beach
Undertow Beach Bar, St. Pete Beach, Inc.
NO TRESPASSING
PRIVATE BEACH


NO
TRESPASSING
PRIVATE
BEACH


PRIVATE PROPERTY
NO
TRESPASSING
PRIVATE PROPERTY
NO
TRESPASSING
PRIVATE
BEACH


PRIVATE PROPERTY
NO TRESPASSING
Undertow Beach Bar
St. Pete Beach, Inc.
PRIVATE PROPERTY
Undertow
Private Beach
Undertow Beach Bar, St. Pete Beach, Inc.




ALL THE WAY TO THE HOTEL
PRIVATE BEACH
Pass-through access is Alllowed
NEXT 50 FEET OR TO THE WATER

10



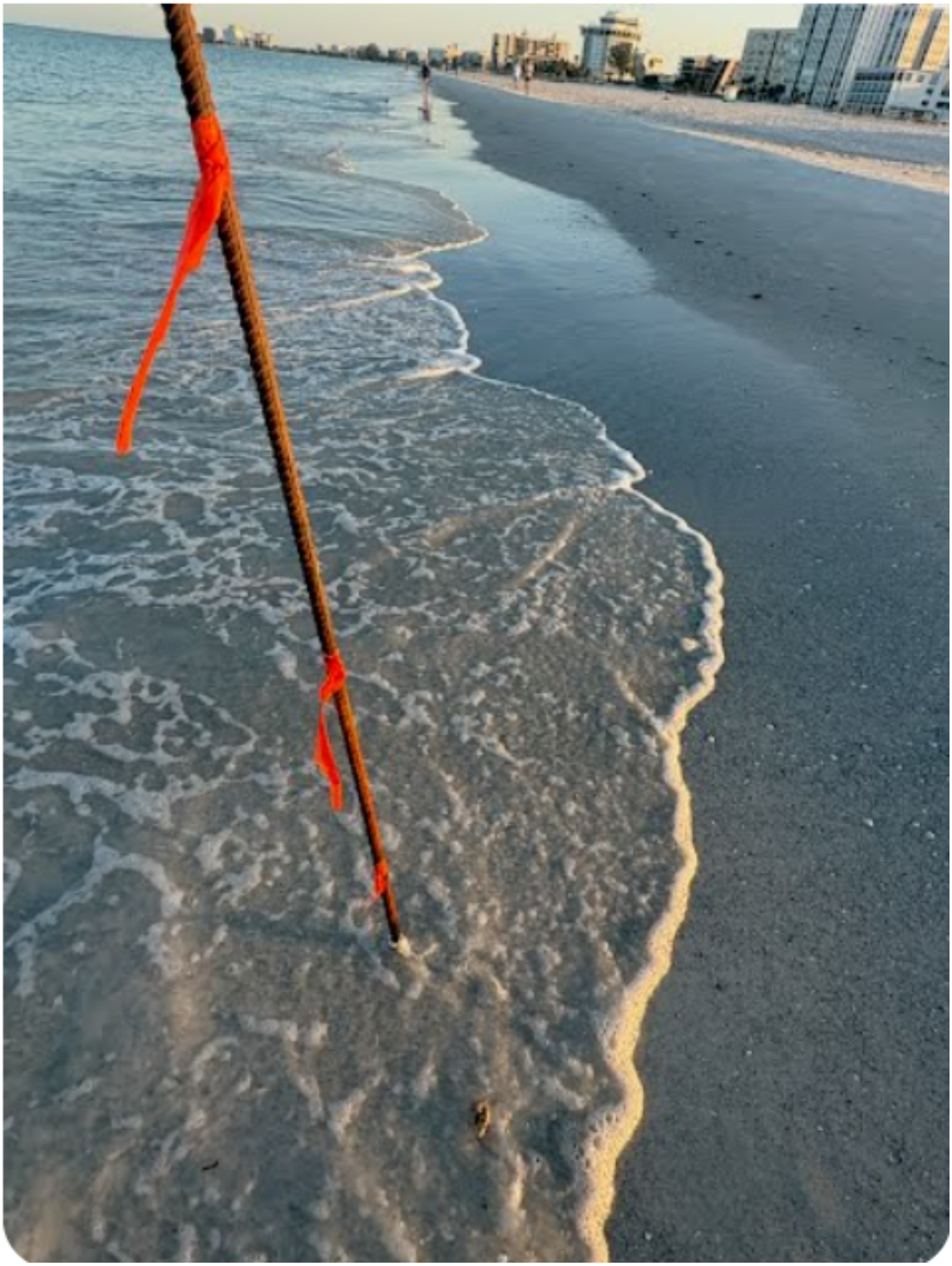



Journal of Coastal Research	14	4	1343–1347	Royal Palm Beach, Florida	Fall 1998

Effects of Exposed Pilings on Sea Turtle Nesting Activity at Melbourne Beach, Florida

Sarah Bouchard, Kathleen Moran, Manjula Tiwari, Daniel Wood, Alan Bolten, Peter Eliazar, and Karen Bjorndal

Archie Carr Center for Sea Turtle Research and
Department of Zoology
University of Florida
P.O. Box 118525
Gainesville, FL 32611, U.S.A.

ABSTRACT

BOUCHARD, S.; MORAN, K.; TIWARI, M.; WOOD, D.; BOLTEN, A.; ELIAZAR, P., and BJORNDAL, K., 1998. Effects of Exposed Pilings on Sea Turtle Nesting Activity at Melbourne Beach, Florida. *Journal of Coastal Research,* 14(4), 1343–1347. Royal Palm Beach (Florida), ISSN 0749-0208.

Beach stabilization and nourishment are critical needs in Florida and along much of the U.S. coast. Because offshore sand resources are diminishing, there is much interest in the installation of beach structures for stabilization and nourishment projects. The STABLER™ Disc System (Shoreline Reclamation Inc., Manasquan, NJ) is an example of one such structure in which a series of cement discs is anchored into the beach by pilings. When functioning properly, the discs are buried by the accretion of sand, and only the pilings are exposed. Before any structure can be installed into Florida beaches, however, its impact on sea turtle nesting should be assessed. This study investigated the effects of exposed pilings on sea turtle nesting activity. Artificial pilings constructed from PVC pipe were installed on Melbourne Beach, Florida, and nesting activity was monitored in areas with and without pilings. Nesting activity decreased significantly in the presence of pilings. However, the installation of structures remains an option on sea turtle nesting beaches because some nesting continued to occur. Further research is needed on the effect of exposed pilings on hatchling orientation.

ADDITIONAL INDEX WORDS: Caretta caretta, Chelonia mydas, *beach nourishment, beach stabilization, erosion, green turtle, loggerhead sea turtle, nesting disturbance.*

INTRODUCTION

Beach erosion is a growing problem threatening coastlines throughout the United States. One study conducted in 1989 designated 536 km of 1283 km of Florida coastline as beach erosion problem areas (CLARK, 1989). Because of continued recreational and development interests along Florida coasts, the proportion of shoreline designated as problem areas will continue to grow. Eroded conditions are made worse because less sand is available offshore to naturally build up beaches (CLARK, 1989). The increasing eroded conditions will have both economic and recreational impacts on coastal areas.

In addition to threatening recreational and economic interests, beach erosion has significant ecological impacts. Among the most seriously impacted organisms are sea turtles that utilize the beach environment for nesting. The beaches of the eastern coast of Florida are some of the most important sea turtle nesting beaches in the world. In addition to leatherback, *Dermochelys coriacea,* and green turtles, *Chelonia mydas,* these beaches support one of the largest loggerhead, *Caretta caretta,* nesting populations in the world (NATIONAL RESEARCH COUNCIL, 1990). All of these species are classified as either threatened or endangered, and preservation and stabilization of their nesting habitat is critical to their future survival.

The peak nesting season for loggerhead sea turtles in Florida occurs during the summer months, June through August (WITHERINGTON, 1986). During this time, females crawl onto the beach, select a nest site, and excavate an egg chamber approximately 50 cm in depth (HENDRICKSON, 1995; DODD, 1988). The female then deposits her clutch of about 115 eggs into this chamber where they incubate for approximately 50–55 days (WITHERINGTON, 1986; HIRTH, 1980).

According to MONTAGUE (1993), beach instability and erosion can diminish sea turtle nesting success in several ways: (1) steep escarpments in the beach can hinder females from emerging onto the beach to nest; (2) removal of sand from the beach and creation of a rocky substrate or a shallow layer of sand can prevent nest excavation to a suitable depth; and (3) the washing out of nests that are incubating in the beach can expose eggs to predation and desiccation. Additionally, beach erosion is a problem because sea turtles are known to have strong nesting site fidelity, continually returning to their natal beaches to nest (BOWEN, 1995; CARR and CARR, 1972). Thus, beaches that have established nesting colonies must be preserved and maintained.

97084 received 11 July 1997; accepted in revision 5 October 1997.



Figure 1. The STABLER™ disc system before it is buried (upper illustration shows three discs between pilings instead of the standard four discs between pilings). The pilings remain above the surface of the beach after the discs are buried (lower illustration). We simulated these exposed pilings in our study.

Because beach erosion threatens both public and private property as well as tourism along the coast, much attention is currently focused on nourishment of beaches with severe erosion problems. The effects of beach nourishment on sea turtle nesting are not completely known, and continued work is needed to fully understand how to nourish and stabilize beaches in a manner more compatible with sea turtle populations (CRAIN *et al.*, 1995). One important aspect to investigate is the effect of structures installed on the beaches for nourishment and stabilization projects. In many locations throughout Florida, structures, such as sea walls, have been installed in attempts to "armor" the beach against erosion. Often these structures prove detrimental to the ability of sea turtles to nest successfully. Therefore, it is important to evaluate what types of structures may be installed in nesting beaches so that impact on sea turtle populations is limited.

We examined one such system in which structures are installed in the beach for stabilization. The STABLER™ Disc System (Shoreline Reclamation Inc., Manasquan, NJ) consists of a series of 318 kg concrete discs (1.22 m wide, 18 cm thick) linked together creating a chain (Figure 1). The discs are arranged edge to edge, forming 90° angles between adjacent discs and 45° angles between disc faces

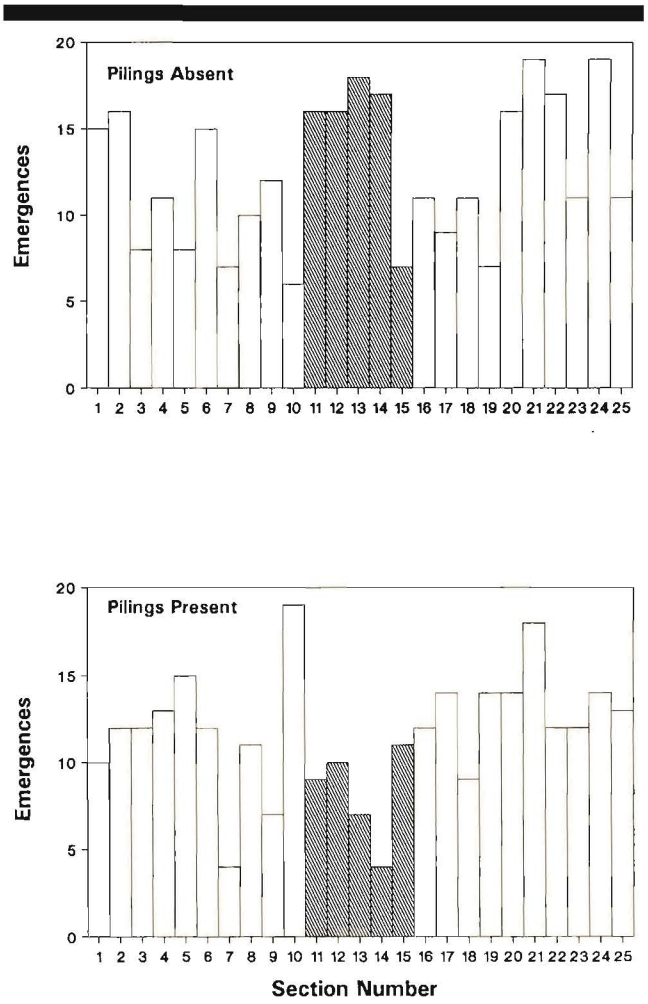

Figure 2. The total number of loggerhead and green turtle emergences in the 1250-m study area at Melbourne Beach, Florida, that occurred on 17 control nights when pilings were absent and on 16 experimental nights when pilings were present. Each section is 50 m and is located in either the northern control region (sections 1–10), the experimental region (11–15), or the southern control region (16–25). The shaded columns highlight the number of emergences in the experimental region. The number of emergences in the experimental region when pilings were present was significantly less than that of the same region when pilings were not present (Mann-Whitney U test, $p = 0.011$). The density of emergences was significantly less in the experimental region than in the control regions when pilings were present (Kruskal-Wallis test, $p = 0.027$).

and the beach. At every fourth disc, the system is attached to a piling that anchors the system during storms. The distance between pilings is 5.2 m (center to center). This chain of discs and pilings is placed parallel to the beach at the mean high water line so that it is struck during storms or periods of unusually high waves. The waves flow over the angled discs, the energy is dissipated, and sand suspended in the water is deposited around the discs. This repeated action builds the level of the beach and eventually covers the discs (Figure 1).

Studies have demonstrated the efficacy of the STABLER™ Disc System to prevent beach erosion (HERRINGTON, 1995). If the system operates correctly, the discs are buried except during periods of very high surf activity. Because sea turtles nest above the mean high water line, the buried discs should not pose a problem to nesting females. However, the pilings always remain approximately 1 m above the beach surface (Figure 1). The objective of this project was to evaluate the effects of exposed pilings on sea turtle nesting activity.

Table 1. *Number of loggerhead and green turtle emergences on control nights (n = 17) when artificial pilings were absent in the experimental region of the study area and on experimental nights (n = 16) when pilings were present. Statistical values, U and p, are from Mann-Whitney U tests comparing treatment means. SD is standard deviation.*

Region	Pilings Absent	Pilings Present	U	p
Northern Control			115.5	0.458
Mean ± SD	6.4 ± 2.9	7.2 ± 3.5		
Median	6.0	8.0		
Range	2–13	2–14		
Experimental			68.0	0.011
Mean ± SD	4.4 ± 2.8	2.6 ± 1.8		
Median	3.0	2.5		
Range	0–12	0–8		
Southern Control			124.0	0.664
Mean ± SD	7.7 ± 3.9	8.3 ± 3.8		
Median	8.0	8.5		
Range	1–17	2–17		

METHODS

Field work was conducted from 11 June through 1 August 1996. A study area along Melbourne Beach, Florida, that was visually uniform for 1250 m and typified the beach profile of the region was selected. The study area was divided into a northern control region of 500 m, a central experimental region of 250 m where the artificial pilings (AP) were deployed, and a southern control region of 500 m. The entire 1250-m stretch was divided into 50-m sections for data collection and analyses.

Table 2. *Density (emergences/km/night) of loggerhead and green turtle emergences on control nights (n = 17) when artificial pilings were absent in the experimental region and on experimental nights (n = 16) when pilings were present. Statistical values, H and p, are from Kruskal-Wallis tests comparing the three regions of the study area. SD is standard deviation.*

Pilings	Northern Control Region	Experimental Region	Southern Control Region	H	p
Absent				2.28	0.320
Mean	12.7	17.4	15.4		
SD	5.7	11.3	7.7		
Median	12.0	12.0	16.0		
Range	4–26	0–48	2–34		
Present				7.21	0.027
Mean	14.4	10.3	16.5		
SD	7.1	7.2	7.5		
Median	16.0	10.0	17.0		
Range	4–28	0–32	4–34		

The AP were constructed from 25-cm diameter green PVC pipe and stood 1 m high. The AP dimensions were designed to mimic the pilings used in the STABLER™ Disc System. On experimental nights, 49 AP were placed upright along the mean high water line at 5.2-m intervals (center to center). These were deployed at dusk and removed at dawn. On control nights, no pilings were deployed. These two treatments (pilings absent and pilings present) were deployed in a randomized sequence within 2-day blocks. The project was not conducted on Friday and Saturday nights to avoid conflicts during nights of high tourism activities on the beach. Data were not included for nights on which exceptionally high tides resulting from storms overwashed the beach.

Every morning following both experimental and control nights, the 1250-m study area was patrolled to record number of tracks made by sea turtles (loggerheads and green turtles) that had emerged the previous night and crossed the pilings line. Data were collected for each 50-m section. Statistical analyses, including the Mann-Whitney U and Kruskal-Wallis tests, were conducted using SPSS Software version 7.0.

RESULTS

A total of 601 emergences were recorded for 17 control nights and 16 experimental nights (Figure 2). The effect of pilings on sea turtle emergences was evaluated in two ways by comparing the number of emergences between treatments for each region and by comparing the number of emergences between experimental and control regions for each treatment. The mean number of emergences per night for the central experimental region with pilings was significantly less than the same region when pilings were not present (Mann-Whitney U test, $p = 0.011$, Table 1). There was no difference in activity in the northern 500 m control region (Mann-Whitney U test, $p = 0.458$) or the southern 500 m control region ($p = 0.664$).

The emergence activity for each region of the study area was standardized for a 1-km region so that the number of emergences could be compared among the three regions of the beach (Table 2). The numbers of emergences in the three regions of the beach on control nights were not significantly different (Kruskal-Wallis test, $p = 0.320$). The numbers of emergences on the three regions were significantly different on experimental nights (Kruskal-Wallis test, $p = 0.027$). When comparing the three regions of beach on experimental and control nights, there was significantly less nesting activity in the experimental region on nights when pilings were present, and no effect when pilings were not present.

DISCUSSION

The presence of pilings placed along the mean high water line reduced sea turtle nesting activity in that portion of the beach by 41%. This decreased nesting activity, however, should not preclude further consideration of these structures. First, nesting activity was not fully eliminated, as some females continued to nest when pilings were present. Second, the presence of pilings probably displaced nesting females to outside the experimental area and did not prevent the females from nesting successfully. Therefore, when suitable nesting beaches for sea turtles are threatened, the installation of stabilizing structures located near the mean high water line may be a viable option. If exposed structures such as pilings are deployed, factors known to disturb nesting females, such as the presence of people and lights on the beach (WITHERINGTON, 1992; NATIONAL MARINE FISHERIES SERVICE and U.S. FISH AND WILDLIFE SERVICE, 1991) should be minimized to encourage as much nesting as possible.

Before any structures associated with exposed pilings are installed on sea turtle beaches, additional information is needed on the effects of exposed pilings on hatchling orientation. Exposed pilings may have an effect because the presence of silhouettes is known to play a role in hatchling orientation (SALMON *et al.*, 1992). If further research does not indicate significant adverse effects, the installation of structures, such as those associated with the STABLER™ Disc System, may be a possible solution to beach erosion. Preventing beach erosion is essential to protect nests throughout the incubation period and to preserve the beach for future nesting.

ACKNOWLEDGEMENTS

We thank Gary Pieringer and Shoreline Reclamation Inc. (Manasquan, NJ) for providing the funding for this project. We also thank Llewellyn Ehrhart of the University of Central Florida and his students for their cooperation during this study, and the Florida Department of Environmental Protection for issuing us a permit to conduct the study. The manuscript benefitted from the constructive comments of Clay Montague. We are grateful to Ray Carthy for his advice and to all individuals who assisted with deployment of pilings throughout the summer. Laurie Walz drafted the illustrations.

LITERATURE CITED

BOWEN, B.W., 1995. Molecular genetic studies of marine turtles. *In*: BJORNDAL, K.A., (ed.), *Biology and Conservation of Sea Turtles,* revised edition. Washington, DC.: Smithsonian Institute Press, pp. 585–587.

CARR, A.F. and CARR, M.H., 1972. Site fixity in the Caribbean green turtles. *Ecology,* 53, 425–429.

CLARK, R.R., 1989. Beach conditions in Florida—a statewide inventory and identification of the beach erosion problem areas in Florida for beach management planning. *In*: TAIT, L.S., (ed.), *Beach Preservation Technology '89: Strategies and Alternatives in Erosion Control.* Tallahassee, FL: Florida Shore and Beach Preservation Association, pp. 219–227.

CRAIN, A.C.; BOLTEN, A.B., and BJORNDAL, K.A., 1995. Effects of beach nourishment on sea turtles: review and research initiatives. *Restoration Ecology,* 3, 95–104.

DODD, C.K., JR., 1988. Synopsis of the biological data on the loggerhead sea turtle, *Caretta caretta* (Linnaeus 1758). U.S. Fish and Wildlife Service, Biological Report, 88(14), 110p.

HENDRICKSON, J.R., 1995. Nesting behavior of sea turtles with emphasis on physical and behavioral determinants of nesting success or failure. *In*: BJORNDAL, K.A., (ed.), *Biology and Conservation of Sea Turtles,* revised edition. Washington, DC.: Smithsonian Institute Press, pp. 53–57.

HERRINGTON, T.O., 1995. *Monitoring Study of the STABLER™ Erosion Control System at Spring Lake, New Jersey.* Hoboken, New

Jersey: Davidson Laboratory, Stevens Institute of Technology. Technical Report SIT-DL-95-9-2724, 40p.

HIRTH, H.F., 1980. Some aspects of the nesting behavior and reproductive biology of sea turtles. *American Zoologist*, 20, 507–523.

MONTAGUE, C.L., 1993. Ecological engineering of inlets in southeastern Florida: design criteria for sea turtle nesting beaches. *Journal of Coastal Research*, 18, 267–276.

NATIONAL MARINE FISHERIES SERVICE AND U.S. FISH AND WILDLIFE SERVICE, 1991. *Recovery plan for the U.S. population of loggerhead turtle.* Washington DC: National Marine Fisheries Service, 64p.

NATIONAL RESEARCH COUNCIL, 1990. *Decline of the Sea Turtle: Causes and Prevention.* Washington, DC. National Academy Press, 259p.

SALMON, M.; WYNEKEN, J.; FRITZ, E., and LUCAS, M., 1992. Seafinding by hatchling sea turtles: role of brightness, silhouette and beach slope as orientation cues. *Behaviour*, 122, 56–77.

WITHERINGTON, B.E., 1986. Human and natural causes of marine turtle clutch and hatchling mortality and their relationship to hatchling production on an important Florida nesting beach. M.S. Thesis, University of Central Florida, Orlando, 141p.

WITHERINGTON, B.E., 1992. Behavioral responses of nesting sea turtles to artificial lighting. *Herpetologica*, 48, 31–39.

155 Corey Ave
St. Pete Beach, FL 33706

To: Mayor Tate and City Commissioners
From: Frances Robustelli, City Manager
Date: June 15, 2026
Subject: 12-Month Performance Evaluation

Background

At the December 16, 2024, Commission meeting, the City Commission agreed unanimously to an evaluation process for the Charter Officers. The process includes the following:

1. 360 evaluation is conducted anonymously by the City Leadership Team, Charter Officers, a sub-set of the Management Team, those with a direct reporting relationship, and one line-staff representative from each department. The holistic results from the staff evaluation will be included in the evaluation packet submitted as part of the agenda packet. The same evaluation is provided to each Commissioner with the understanding that their evaluation will be publicly available with their individual name provided on the completed evaluation.
2. The Charter Officer prepares a self-evaluation.
3. The Charter Officer prepares goals for the next evaluation cycle.
4. The Charter Officer prepares a compensation request with supporting documentation if applicable.
5. The Charter Officer meets with each Commissioner to discuss the 360 evaluation, self-evaluation and goals.
6. The evaluation packet is prepared for a public meeting that includes all the above documents.
7. The Commission completes the evaluation in a publicly noticed meeting and provides direction if applicable.

360 Evaluation Results

Evaluation Results are attached to this memo. Summary results are provided for staff responses and individual responses are provided for elected officials. 31 people at all levels of the organization were asked to participate, including the Mayor and Commission. We had 20 of the 31 requested participants respond.

Overall, the feedback reflects a high-performing City Manager who has brought stability, accountability, professionalism, fiscal discipline, and operational progress to the city during an unusually challenging period. The main development opportunities are not about lack of capability; they are about sustaining momentum by improving proactive communication, formalizing priorities, strengthening internal equity and morale, and continuing to modernize service delivery and infrastructure planning.

Self-Evaluation

It is an absolute honor to have the privilege to serve the St. Pete Beach community. While there are challenges we face, the benefits of serving alongside a talented team and the endless possibilities for our barrier island make this role the most favorite in my career.

I look forward to working with the City Commission to implement many exciting initiatives and oversee the redevelopment of the city post Helene and Milton. The hurricanes, while devastating, have provided many opportunities for the city to build back better with an eye towards the future of the beach. Our collective vision, establishing ourselves as an employer of choice and exciting opportunities have attracted the best talent to our city, and the service and outcomes have been realized by these investments.

The most important thing to note is that all these accomplishments would not be realized without the vision of the commission and the collective efforts of the city team who work very hard to implement.

Summary of Accomplishments July 2025 through June 2026

1. Passed a comprehensive sign ordinance after years of community outreach and consultant assistance.
2. Completed hearing on Noise Ordinance and subsequently paused all work based on community feedback.
3. Initiated and completed a Finding of Necessity for establishing a Community Redevelopment Area. It is on hold now due to pending ballot measure in November 2026.
4. Implemented a zero-interest state emergency bridge loan to ensure financial security through recovery.
5. Assisted with the recruitment and appointment of a highly skilled and experienced City Clerk.
6. Completed multiple contractual agreements ahead of hurricane season for debris removal, damage assessment, equipment and supplies.
7. Completed contract approval for a construction manager for Fire Station 22, as well as completed the demolition in preparation for construction.
8. Implemented relief ordinances for residents following storm events including landscaping and accessory structure compliance requirements, balcony/stair setbacks, equipment elevation, etc.

9. Adopted a balanced budget and received the Government Finance Officers Association Distinguished Budget Award for the first time in the City's history.
10. Accepted the Annual Comprehensive Financial Report (ACFR) and Independ Audit for Fiscal Year ending 9/30/2024 with no material findings.
11. Approved the Conditional Use Permit for Corey Landings Development that included significant community benefits.
12. Procured new financial and payroll software and completed Go-Live Implementation for both.
13. Negotiated a new PCSO contract at no increased cost and no reduction in service outcomes.
14. Completed a 3-year MOU with the IAFF (firefighters).
15. Construction underway for Wastewater Force Main 1 and is on time and under budget
16. Demolished the Shuffleboard building and issued an RFP for reconstruction.
17. Completed the Substantial Damage Administrative Procedures.
18. Successfully leveraged dozens of volunteers to assist with hurricane recovery in the permitting/building department.
19. Began and made significant progress in televising, cleaning and repair of the city's 18 miles of stormwater pipes and 40+ miles of sewer lines.
20. Completed a comprehensive update of the cities outdated procurement regulations and procedures.
21. Completed a comprehensive ordinance regulating communication and small wireless facilities.
22. Completed approval of a CUP for an open deck dining project in PAG.
23. Continued multiple hurricane repairs on city facilities. Completed roofing projects on all major facilities.
24. Partnered with Tampa Bay Regional Planning Council to create a Bonus Density Valuation Calculator to assist in future development discussions.
25. Completed a comprehensive parking study and implemented new parking rates, generating more revenue from visitors.
26. Facilitated the approval of the waiver of permit fees for seawalls in the city right of way.
27. Partnered with the University of Florida to begin exploration of new revenue generating opportunities for road and stormwater infrastructure.
28. Expended significant staff resources administering an event permit for Country Thunder that ultimately relocated to a Clearwater venue.
29. Consistently provided updates regarding hurricane repair permitting and designed new metrics going forward to ensure expectations and standards are clear to both residents, employees and contractors.
30. Executed agreement with WSP for a community led process to establish level of service and preliminary design for the Don Cesar and Boca Ciega Area Resiliency Capital Improvement projects.
31. CUP approved for redevelopment of a marina project on Blind Pass Road.
32. Recapture of expenses for previously "free" electric charging stations by establishing an electric vehicle charging fee.
33. On-boarded and oriented a New Mayor and Commissioner on city operations.

Goals from two previous review cycles

1. Reach agreement from the Commission regarding portions of the Beach Ordinance to be immediately considered for approval and a process and timeline for completing the remainder of the policy decisions related to the ordinance.
   On-Hold
2. Complete Fee Studies for Wastewater, Reclaimed Water, Storm Water, Development Impact Fees, Parking, and all other City recreational and facility services.
   Partially Complete and In Progress
3. Continue tracking FEMA grant programs and managing necessary documentation to maximize reimbursement to the City for Helen/Milton damage.
   In Progress and will be for several years
4. Complete and submit State appropriation requests for Fire Station 22 and the Wastewater System Bay pipeline. Actively utilize City lobbyists and relationships with all elected representatives to promote the City's case to secure as much funding as possible. **Complete and secured $5M in State appropriation. Awaiting Governor Approval for an additional $1.5M.**
5. Secure staffing to support resident and business recovery efforts that result in decreases in permit and inspection processing timelines. Prepare and communicate metrics to demonstrate outcomes.
   Complete
6. Complete a comprehensive Capital Improvement Plan by June 2025 for consideration and inclusion in the FY 2025-2026 budget process.
   Complete

Goals for June 2025 through July 2026

1. **Implement measures for continuous improvement in communications, internally and externally.**
   a. Increased City Managers' presence at community meetings hosted by district representatives.
   b. Actively participated in the Don Cesar monthly resiliency meetings.
   c. Provided communication with the residents and businesses through print and social media outlets on a regular basis.
   d. Added CM weekly to the city website accessible to all public.
2. **Implement processes and programs that decrease the funding gap for critical infrastructure.**
   a. Significant progress in managing, tracking and applying for grant opportunities.
   b. Multiple fee studies underway and plan to bring multi-year rate strategies to enhance ability to fund critically aging infrastructure.
   c. Actively planning next fiscal years budget to anticipate for potential property tax reform.

3. **Complete major organizational changes and implement key finance/HR systems, and classification and pay plans.**
    a. Implemented annual adoption of the pay plan by commission for greater transparency of establishment of classifications and pay bands.
    b. Utilized vacancies for opportunities to consolidate and reorganize resulting in more efficient and productive teams.
4. **Align strategic planning with budget goals and clear metrics.**
    a. Achieved significant progress in developing goals, objectives and metrics for the 5 strategic initiatives, led and facilitated by internal staff.
    b. Implemented a comprehensive public facing CIP dashboard.
    c. Planning for a survey mechanism to increase touch points with community on key issues.
5. **Maintain actions that promote morale and strong performance.**
    a. Implemented a merit-based pay approach, designed to reward strong performance.
    b. Implemented a performance review system with competencies that align with the city's top 10 team commitments.
    c. Received approval to adjust PTO caps for those employees impacted by hurricane recovery and who were unable to take leave during the most critical time periods to serve the city.
    d. Received approval to add Christmas Eve as a holiday.
    e. Created a broader recognition program designed by the employee committee and funded in the budget.
    f. Made appropriate staffing changes and decisions necessary to instill confidence in accountability and expectations of a high work ethic.
6. **Ensure process improvements support a level of excellent community customer service are realized in permitting and code enforcement.**
    a. New metrics and dashboards are created to track response times and outcomes to ensure continued accountability and transparency.
    b. Building and Permitting team "right sized" for current and projected workload.
    c. Contractor meetings hosted by staff to get feedback in real time regarding pain points in the process. These will be on-going.
    d. Innovation team creating process improvement in workflow with the teams who serve the community.
    e. Single point of contact instituted with required check-in during the project to assist with moving this to completion.
    f. Office hours for permit office extended.

Goals for July 2026 through June 2027

1. Complete the Strategic Plan, make progress and/or implement all portions and report on outcomes on a regular basis.
2. Complete and implement all fee studies in accordance with Commission approval.

3. Provide solutions and a path forward in anticipation of potential property tax reform.
4. Complete a comprehensive asset management plan for all City assets.
5. Complete a 10-year long-term financial forecast to utilize as a planning tool for budgeting and funding of infrastructure.

Contract Amendment Request

I request that my contract be amended to provide for the following:

1. Same annual Cost of Living Adjustment percentage as provided to the general employees each fiscal year as approved by the City Commission.
2. Two-year contract extension. Provides a total contract term of 5 years from original hire date.
3. Limited Post-Election Transition period. Provides a 90-day period post-election non-termination without cause provision. This enables the City Manager to work with any newly elected officials before continued employment decisions are discussed or acted on.

City Manager Performance Evaluation Results Summary

Prepared by: Jody Costello, Human Resources Director
Employee: Frances Robustelli, City Manager
Evaluation Period: July 1, 2025 - June 30, 2026
Respondents: 5 Commission, 15 other participants

Purpose of This Summary

- This document summarizes survey feedback collected during the evaluation process.
- Commission feedback is non-confidential.
- All other participants are confidential.

Overall Performance Summary

Overall, the feedback reflects a high-performing City Manager who has brought stability, accountability, professionalism, fiscal discipline, and operational progress to the City during an unusually challenging period. The main development opportunities are not about lack of capability; they are about sustaining momentum by improving proactive communication, formalizing priorities, strengthening internal equity and morale, and continuing to modernize service delivery and infrastructure planning.

Supporting Documentation

- Appendix A: Survey Results City Commission
- Appendix B: Survey Comments Commission
- Appendix C: Survey Result Other participants
- Appendix D: Survey Comments Other participants

Responses Overview Active

Responses	Average Time	Duration
5	97:24	21 Days

1. Fosters teamwork and cooperation across departments and staff.

Exceptional	2
Highly Competent	2
Competent	0
Needs Improvement	0
Poor	0
Don't Know/No Experience	1

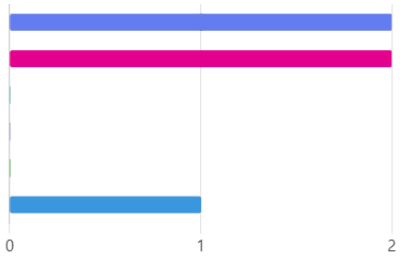

2. Provides an effective link between staff and the Elected Officials.

Exceptional	2
Highly Competent	2
Competent	1
Needs Improvement	0
Poor	0
Don't Know/No Experience	0

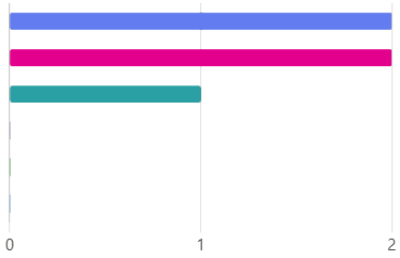

3. Maintains high standards of honesty, integrity and trust.

Exceptional	2
Highly Competent	2
Competent	0
Needs Improvement	1
Poor	0
Don't Know/No Experience	0

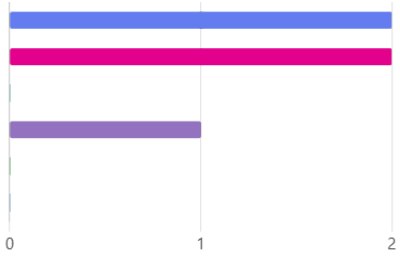

4. Delegates and holds staff accountable for results.

Exceptional	1
Highly Competent	1
Competent	3
Needs Improvement	0
Poor	0
Don't Know/No Experience	0

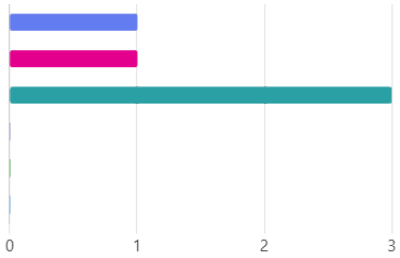

5. Is action and results oriented and expects this from staff.

Exceptional	1
Highly Competent	1
Competent	3
Needs Improvement	0
Poor	0
Don't Know/No Experience	0

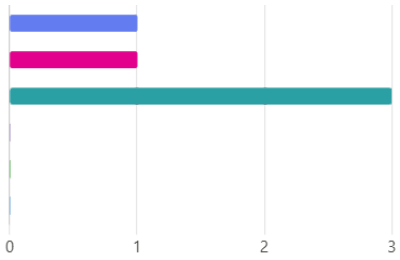

6. Is approachable, accessible, and friendly.

Exceptional	3
Highly Competent	2
Competent	0
Needs Improvement	0
Poor	0
Don't Know/No Experience	0

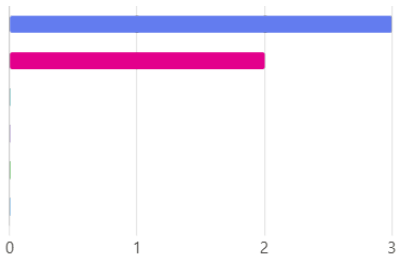

7. Works to maintain and improve employee morale.

Exceptional	2
Highly Competent	1
Competent	1
Needs Improvement	0
Poor	0
Don't Know/No Experience	1

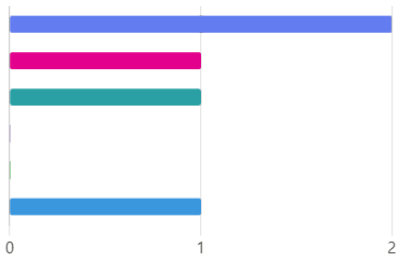

8. Introduces new ideas, concepts, and best practices.

Exceptional	2
Highly Competent	2
Competent	1
Needs Improvement	0
Poor	0
Don't Know/No Experience	0

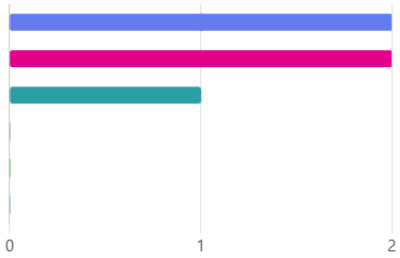

9. As a leader, conducts productive and efficient staff meetings?

Exceptional	1
Highly Competent	1
Competent	0
Needs Improvement	0
Poor	0
Don't Know/No Experience	3

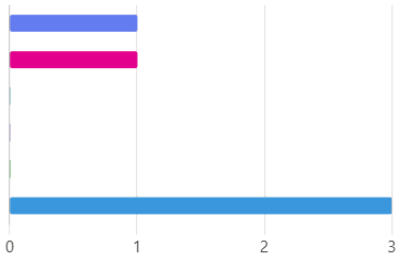

10. As a leader, is clear about expectations and outcomes.

Exceptional	1
Highly Competent	4
Competent	0
Needs Improvement	0
Poor	0
Don't Know/No Experience	0

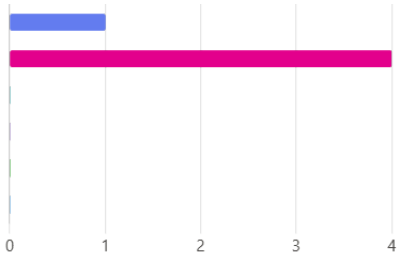

11. As a leader, provides guidance and direction to staff - both as a teacher and a coach.

Exceptional	1
Highly Competent	1
Competent	0
Needs Improvement	0
Poor	0
Don't Know/No Experience	3

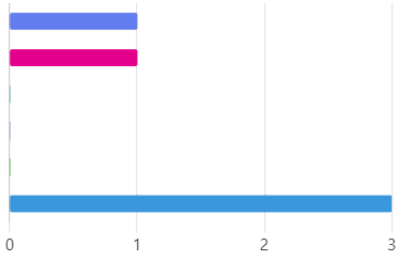

12. Please provide your overall comments on the City Manager's performance on leadership of the city.

5
Responses

Latest Responses

"Frances is an effective leader and under her leadership the city continues to make..."
"While my interactions with City Manager have only started in the preceding few ... "
"The city seems to be continuing to function better and better under her leadership."

• • •

13. Provides high level of public information and expects excellent customer service.

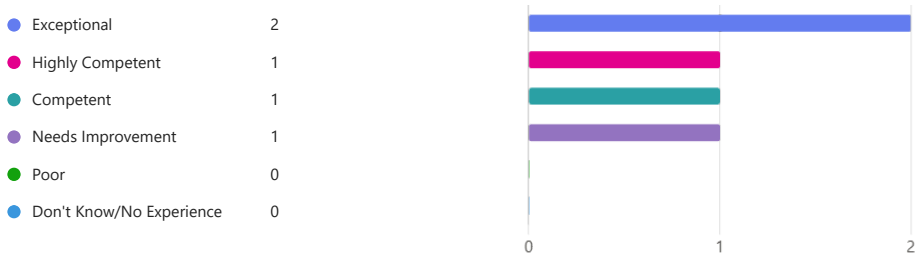

14. Is accessible; encourages citizen feedback and acts on this information.

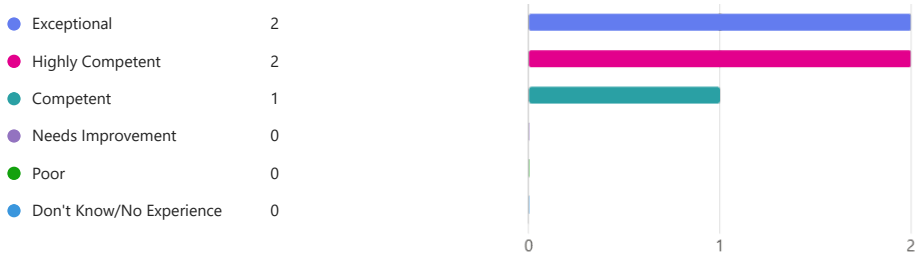

15. Ensures quick follow-up and resolution to citizen complaints and request for service.

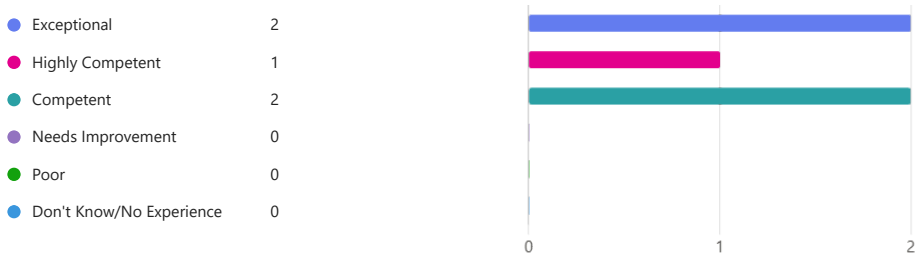

16. Maintains and expects you to maintain effective, cooperative relationships with local cities, the county, colleges, regional school districts and the business community.

Exceptional	1
Highly Competent	1
Competent	2
Needs Improvement	1
Poor	0
Don't Know/No Experience	0

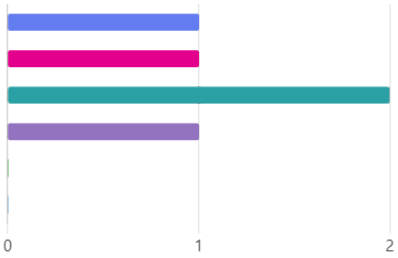

17. Provide your overall comments on the City Manager's performance on community relations.

5
Responses

Latest Responses

"Frances' relationship with the local community is positive, accessible and results o..."
"City Manager and her team are actively working to develop tools to improve rep... "
"Resident's concerns are addressed quickly and she seems to be very accessible fo... "
• • •

18. Effectively reports and projects the financial condition of the City.

Exceptional	4
Highly Competent	1
Competent	0
Needs improvement	0
Poor	0
Don't know/No experience	0

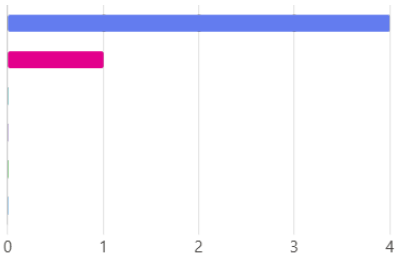

19. Designs management practices/policies to maintain a sound, long-range financial position.

Exceptional	2
Highly Competent	2
Competent	0
Needs improvement	0
Poor	0
Don't know/No experience	1

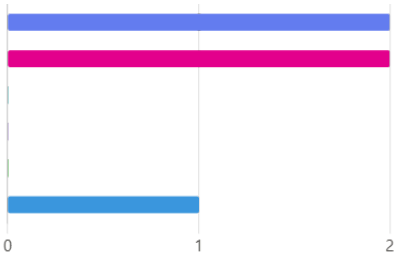

20. Implements effective programs to limit liability and loss.

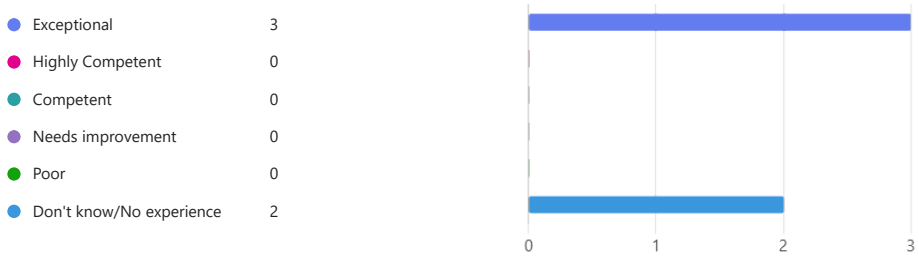

21. Effectively helps establish and implement Commission budgetary goals.

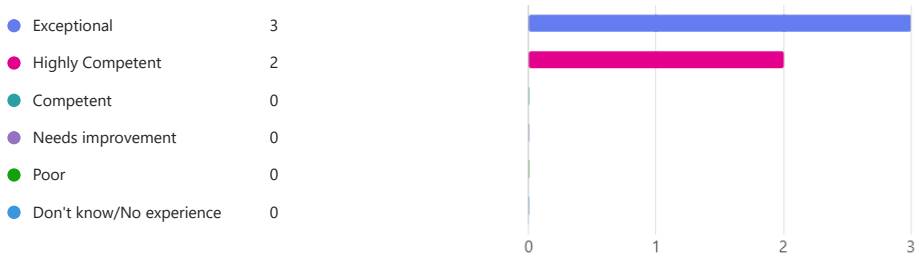

22. Maintains effective relationships with the Chamber of Commerce, business community, and other community groups.

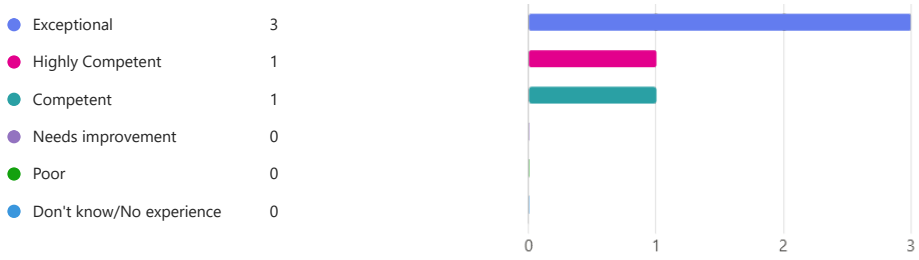

23. Please provide your overall feedback on the City Manager's performance on financial management of the City

5
Responses

Latest Responses

"Frances provides thorough financial reporting and implementation of Commissio... "

"City Manager and her team do a very good job of explaining the city's current fin... "

"I appreciate the long-range financial planning that she has brought to the city."

• • •

24. Please list achievements since July 2025 that can be attributed to the City Manager's leadership.

5
Responses

Latest Responses

"Stormwater drain cleaning, public CIP dashboard page and continued disaster rec..."

"My tenure with the City Manager has been brief, but I am impressed with her wor..."

"Significant improvements to the permitting process in the building department, i... "

• • •

25. Please list challenges outside of the City Manager's control that should be considered when evaluating their performance.

5
Responses

Latest Responses

"SB180 and other legal restraints, budgetary restraints due to continued Hurricane..."

"The City Manager faces challenges of garnering consensus from 5 Commission M..."

"Elected officials derailing plans,"

• • •

26. Please list performance targets and projects that you believe should be considered by the Elected Officials when developing the City Manager's work plan for the next year.

5
Responses

Latest Responses

"Infrastructure repairs and maintenance advancements, Grant and alternative fund..."

"1. Assisting the Commission in developing a long-range strategic plan for the city..."

"Continue to refine processes so that resident interaction with city services is frien... "

• • •

27. Please think about the City Manager's overall contribution to the City. Add any suggestions/comments that would help maintain their strengths and improve their skill.

5
Responses

Latest Responses

"Continue to strive for excellence, best practices forefront, accessability to both th... "

"Remain focused on St. Pete Beach as an overall "community" when identifying op..."

"Be more willing to advise elected officials based on her depth and breadth of exp..."

• • •

28. This survey may not have conveyed everything you would like to say about the City Manager. The comments section below allows you to add supplementary information that you wish to express.

3
Responses

Latest Responses

"Frances has proven herself as an effective leader and manager. She has been inva..."

"Frances is a tremendous asset to the city."

• • •

APPENDIX B – Full Survey Comments – City Commission

Question: Please provide your overall comments on the City Manager's performance on leadership of the city.

Mayor: Scott Tate

- While my interactions with City Manager have only started in the preceding few months, I have been impressed with her work ethic, level of commitment, and drive to continuously improve the level of experience residents of the city receive from city staff. It's clear that more work remains to be done, but the spirit of continuous improvement is commendable.

Commissioner, District 1: Karen Marriot

- The city seems to be continuing to function better and better under her leadership.

Commissioner, District 2: Lisa Robinson

- Frances is an effective leader and under her leadership the city continues to make improvements in our processes, communications & transparency. Though I do feel that improvement is still needed in specific departments, that a more honest assessment of our both achievements and failures should be openly discussed and that equal time must be afforded between the community shareholders such as was evident with the Beach Ordinance. I also feel that the City Manager Operational report has turned into more of a City PR/Marketing document than its initial intention as it holds very little context and lots of fluff. I'd prefer a more direct piece that includes context, detailed information including status reports (good & bad) and doesn't take time away from staff's duties in an attempt to fill the report on a weekly basis that could be done on a biweekly or monthly basis. Lastly, better communication on the resolution of reported issues is needed and more accurate information should be provided during Commissioner/CM meetings.

Commissioner, District 3: All Causey

- Frances understands the nuances of city leadership and has transformed our city since her arrival.

Commissioner, District 4: John Maldonado

- Frances effectively manages and fosters teamwork and cooperation across her various departments and staff. One area which I feel she needs to focus on is improving proactive communication between staff and the Elected Officials. She undoubtedly maintains high standards of honesty, integrity and trust. For example, when staff makes decisions which are later viewed as contrary to community input [or lack of input] she quickly remedies the situation in a public forum to regain constituents trust. I.e. Postponing or pulling items from Commission agendas with a brief explanation on why the action was necessary. Mrs. Robustelli holds staff accountable for not meeting expectations and/or producing results. This is evident in recent retirement and termination of employees who have failed to meet expectations. Furthermore, she is action oriented and demands the same from her staff. She engages customers [residents, contractors and businesses] in approachable, accessible, and friendly manner. One observation/Recommendation is for her to leverage the assistant City Manager to limit this access as this could limit her unbiased decision-making. Her strongest character is her outside experience, which she routinely relies on to introduce new ideas, concepts, and best practices. I applaud her willingness to hear my thoughts and ideas from my experience in government. Lastly, she provides clear expectations through effective communications and written guidance.

Question: Provide your overall comments on the City Manager's performance on community relations.

Mayor: Scott Tate

- City Manager and her team are actively working to develop tools to improve reporting of data and key metrics in order to provide a better level of service to City Commission and residents. These initiatives are not, yet, fully implemented, but I believe that the additional transparency and ability for residents to self-service on items such as city projects (CIP) and permitting status - and for staff to track key metrics around our service to the community, will provide a significant benefit to the community once implemented.
-

Commissioner, District 1: Karen Marriot

- Residents' concerns are addressed quickly, and she seems to be very accessible for all community members.

Commissioner, District 2: Lisa Robinson

- Frances' relationship with the local community is positive, accessible and results oriented. Her commitment to the SPB community is further demonstrated by her SPB home purchase. Other than monthly Chamber of Commerce meetings and the partnership with UF on CRA and Parking Assessment, I am unaware of additional cooperative relationships. High level information is provided via quarterly newsletter and frequent Commission Meeting presentations which are timely and informative. The expectation of excellent customer service needs improvement as it needs to be more than just words and requires accountability. Again, equal time must be given to community shareholders as was evident regarding the Beach Ordinance when it excluded resident meetings while allowing for (2) Hotelier meetings.

Commissioner, District 3: All Causey

- Communicates exceptionally at all levels.

Commissioner, District 4: John Maldonado

- Providing high level of public information has improved over the past 12 months through community engagements, social media, and weekly operational reports. She effectively leverages the Commission to encourage citizen feedback and acts on this information. One area that the city in its entirety needs to improve on under her tutelage is quick follow-up and resolution to citizen complaints; and request for service. I have personally expressed my concerns to her on lag time on Clickfix tickets that have been open for excessive amount of time. She has taken this feedback and working on improving pro-active communication between staff and stakeholders. We have also discussed the need to establish a formal "Liaison program " to maintain effective, cooperative relationships with local State representatives, the county, and the business community through Promote St. Pete-Clearwater.

Question: Please provide your overall feedback on the City Manager's performance on financial management of the City.

Mayor: Scott Tate

- City Manager and her team do a very good job of explaining the city's current financial picture, including related strengths and weaknesses. They are also actively providing guidance to the City Commission as we collectively work through the budgeting process for next year. Once the timing is more appropriate, I look forward to her leadership regarding longer-term aspects of

the city's financial plan as we look out 5, 10, 20+ years to ensure long-term fiscal viability.

Commissioner, District 1: Karen Marriot

- I appreciate the long-range financial planning that she has brought to the city.

Commissioner, District 2: Lisa Robinson

- Frances provides thorough financial reporting and implementation of Commission's budgetary goals. As a city that is not yet in "blue skies" financially, some long range goals may need to be secondary to short term planning and policies. Spending and staffing priorities need to be continuously addressed as well as maintaining a sharp focus on funding opportunities.

Commissioner, District 3: All Causey

- She has balanced programs and enhanced stability during the worst of times, two hurricanes within ten days! Great work!

Commissioner, District 4: John Maldonado

- This is an area where the City Manager is performing in an exceptional manner. This is especially critical given the former City Manager's lack of financial management abilities. Her success is largely due to recruiting the right talent and subsequently adopting budget workshops with rigorous guidance to the Commission based on harsh realities of fiscal limitations.

Question: Please list achievements since July 2025 that can be attributed to the City Manager's leadership.

Mayor: Scott Tate

- My tenure with the City Manager has been brief, but I am impressed with her work ethic, integrity, and leadership philosophy. Notable achievements in the past few months include efforts towards the forthcoming launch of a CIP dashboard and permit dashboard. I have also seen an uptick in the quality of community engagement efforts (St. Patty's Day Festival, Spring Festival, Seafood Festival) which have been generally well-received by the community.

Commissioner, District 1: Karen Marriot

- Significant improvements to the permitting process in the building department, improved CIP long-range planning, institution of consistent processes for event in the city, approval of Cory Landings development, development of data-driven methods of evaluating development projects in the city.

Commissioner, District 2: Lisa Robinson

- Stormwater drain cleaning, public CIP dashboard page and continued disaster recovery. Parking study and associated fee report. Nuisance and emergency Sign ordinances. Corey Landings negotiations, TC-2 Town Center Community Forum, UF CRA & Parking-based fee assessment presentations.

Commissioner, District 3: All Causey

- Frances navigated the impossible task of post-hurricane permitting, now emerging in far better shape than ever before. Amazing progress. I'm happy to work with Frances on a daily basis.

Commissioner, District 4: John Maldonado

- Played a HUGE role in the city receiving grants and funding towards CIP, i.e. Fire Station 22; launched "Digital Dashboard" which improves transparency and accountability; led dialogue with Hoteliers and liaised with developers on proposed ordinances and major development at Corey Landing. Proactively worked with internal/external stakeholders on efforts to establish a 1st ever CRG in SPB which is in the development phase; partnered with local colleges and organizations to ensure cost of studies was minimized. Partnered with wildlife organizations to improve Beach Stewardship. Sought expertise and external stakeholders input for Inflow and Infiltration (I&I) issues and provided critical and accurate assessment to Commission on magnitude of problem. Led Parking increase and Density discussions. Most importantly, revamped derailed permit issuance process by streamlining application, tracking, and pro-active engagement with applicants.

Question: Please list challenges outside of the City Manager's control that should be considered when evaluating their performance.

Mayor: Scott Tate

- The City Manager faces challenges of garnering consensus from 5 Commission Members, while also balancing input from multiple constituents (residents,

business owners, visitors), which may often have competing priorities. Balancing these many input points into a cohesive strategy that provides for a better overall "community" experience is important for our city's success, but is a shared challenge.

Commissioner, District 1: Karen Marriot

- Elected officials derailing plans

Commissioner, District 2: Lisa Robinson

- SB180 and other legal restraints, budgetary restraints due to continued Hurricane recovery repair costs and increased inflationary costs.

Commissioner, District 3: All Causey

- Hurricanes, oppositional stakeholders, annual commission turnover, restaffing city hall to put the highest level of customer service in reach. Tax cuts present a challenge.

Commissioner, District 4: John Maldonado

- Senate Bill 180 is amongst the largest challenge to the City Manager's efforts to apply self-governance. Additionally, strong lobbyists in the communications arena, i.e. 5G towers and recent laws impacting City's ability to push back on new installments. Potential litigation relating to private beach ownership and customary use doctrine. Lastly, fiscal limitations imposed by county [TDT], Federal and State legislation and cuts in grants.

Question: Please list performance targets and projects that you believe should be considered by the Elected Officials when developing the City Manager's work plan for the next year.

Mayor: Scott Tate

1. Assisting the Commission in developing a long-range strategic plan for the city's financial future that includes current asset restoration/maintenance and long-term new asset planning opportunities to improve city resiliency.
2. Formal implementation of the permitting dashboard and ongoing significant improvement to the city's permitting systems and processes based on resulting dashboard metrics.

3. Development and improvements to City policies and related enforcement that improve the overall shared community experience that residents, businesses and visitors have with St. Pete Beach.

Commissioner, District 1: Karen Marriot

- Continue to refine processes so that resident interaction with city services is friendly and efficient, continue to improve building department with regards to permitting, continue to foster an environment of community and collaboration throughout the city (employees, residents, and businesses).

Commissioner, District 2: Lisa Robinson

- Infrastructure repairs and maintenance advancements, Grant and alternative funding advancement, improved permitting performance and consistency, equitable community shareholder engagement, resiliency advancements, clear and concise communication on all levels

Commissioner, District 3: All Causey

1. Accomplish one explicitly defined and agreed upon infrastructure objective per commissioner during 2027. This will require building consensus and understanding.
2. Bring the permitting process to a level of 95% excellence and customer service relative to peer cities.
3. Work with each commissioner to raise community engagement by a factor of 2 within each district, finding ways to hear from a wider base of constituents.
4. Ensure our most expensive, most difficult to achieve infrastructure needs are on track to completion after almost 80 years of failed attempts using a system of community education, fee revenues to balance enterprise funds, and an appropriate level of bonding each year to accomplish all identified needs within the next 10-15 years.
5. Don’t let the stormwater needs of our public streets experience any delays — no delays. Build momentum and keep it growing.
6. Work with the commission to develop a 15 year capital improvement strategy to restore and improve all infrastructure to a consensus opinion within each individual district (which means community engagement, education, and getting funding). This may demand a third party to educate and engage the community in order to build consensus.

Commissioner, District 4: John Maldonado

- Strict adherence to height and design in Historic District(s). Needs to ensure Design Gude-Book gets across the finish line. Critically assess "hardship" for vacant lots and adherence to certificate of appropriateness (Sec 28.13) and prevent procedural failures IAW Purpose Powers and Duties of the Historic

Preservation Board as outlined in Article VII and Sec 22-206 and 22-211. Proactive focus on submerged land-leases and small parcels of land "acquired" over time without transfer or convenience, i.e. 12th Ave Dock, alleys in PAG, and lot adjacent to Ercius Park.

Question: Please think about the City Manager's overall contribution to the City. Add any suggestions/comments that would help maintain their strengths and improve their skill.

Mayor: Scott Tate

- Remain focused on St. Pete Beach as an overall "community" when identifying opportunities to improve our city.

Commissioner, District 1: Karen Marriot

- Be more willing to advise elected officials based on her depth and breadth of experience.

Commissioner, District 2: Lisa Robinson

- Continue to strive for excellence, best practices forefront, accessibility to both the City Manager and staff and to provide context and detail.

Commissioner, District 3: All Causey

- Our current commission understands the value of cooperation and provides a unique opportunity to reach new levels of customer service and excellence with your wise leadership. Our city is overdue for renovation in almost every way. You have one of the best brands in the USA, so we must protect it.

Commissioner, District 4: John Maldonado

- Continue to seek development courses and opportunities.

Question: This survey may not have conveyed everything you would like to say about the City Manager. The comments section below allows you to add supplementary information that you wish to express.

Commissioner, District 1: Karen Marriot

- Frances is a tremendous asset to the city.

Commissioner, District 2: Lisa Robinson

- Frances has proven herself as an effective leader and manager. She has been invaluable navigating through FEMA & FDEM directives, balancing community priorities and continuing to move the city through recovery. I thank her for her efforts and commitment to the community.

Commissioner, District 3: All Causey

- Frances understands the nuances of leadership. We are lucky to have her leading our staff and helping our commission improve our city. I see, “Progress and Service” in our future.

Responses Overview Active

Responses	Average Time	Duration
15	181:45	16 Days

1. Fosters teamwork and cooperation across departments and staff.

Exceptional	6
Highly Competent	7
Competent	2
Needs Improvement	0
Poor	0
Don't Know/No Experience	0

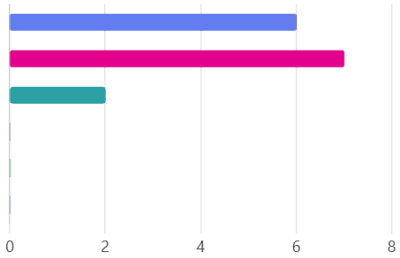

2. Provides an effective link between staff and the Elected Officials.

Exceptional	1
Highly Competent	11
Competent	2
Needs Improvement	1
Poor	0
Don't Know/No Experience	0

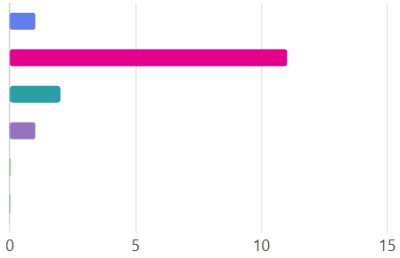

3. Maintains high standards of honesty, integrity and trust.

Exceptional	8
Highly Competent	4
Competent	3
Needs Improvement	0
Poor	0
Don't Know/No Experience	0

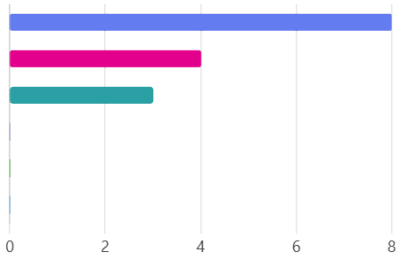

4. Delegates and holds staff accountable for results.

Exceptional	5
Highly Competent	8
Competent	2
Needs Improvement	0
Poor	0
Don't Know/No Experience	0

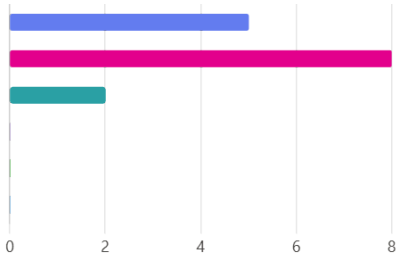

5. Is action and results oriented and expects this from staff.

Exceptional	8
Highly Competent	6
Competent	1
Needs Improvement	0
Poor	0
Don't Know/No Experience	0

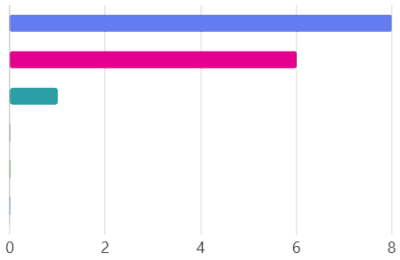

6. Is approachable, accessible, and friendly.

Exceptional	9
Highly Competent	2
Competent	4
Needs Improvement	0
Poor	0
Don't Know/No Experience	0

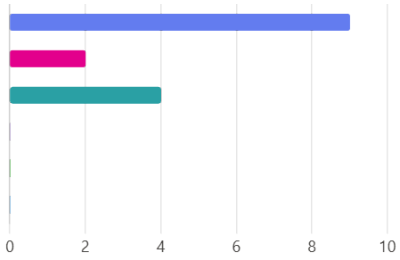

7. Works to maintain and improve employee morale.

Exceptional	5
Highly Competent	6
Competent	3
Needs Improvement	1
Poor	0
Don't Know/No Experience	0

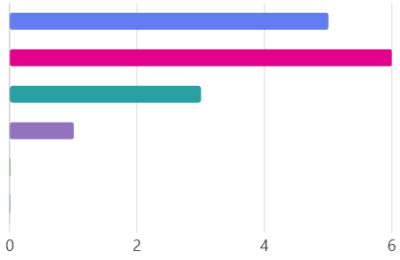

8. Introduces new ideas, concepts, and best practices.

Exceptional	5
Highly Competent	7
Competent	3
Needs Improvement	0
Poor	0
Don't Know/No Experience	0

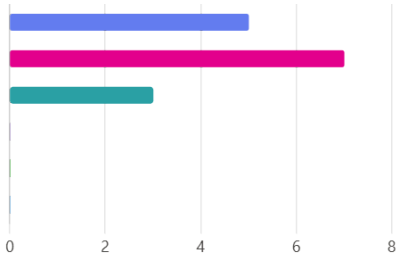

9. As a leader, conducts productive and efficient staff meetings?

Exceptional	5
Highly Competent	8
Competent	1
Needs Improvement	1
Poor	0
Don't Know/No Experience	0

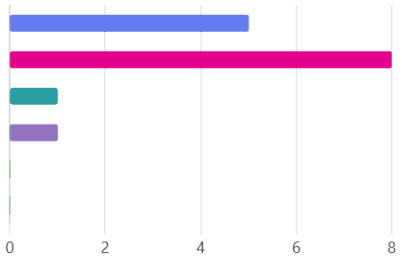

10. As a leader, is clear about expectations and outcomes.

Exceptional	5
Highly Competent	7
Competent	3
Needs Improvement	0
Poor	0
Don't Know/No Experience	0

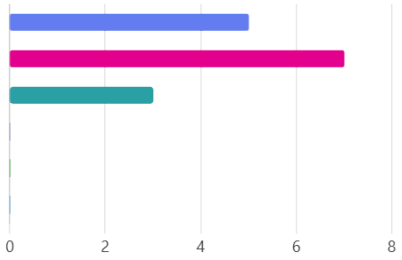

11. As a leader, provides guidance and direction to staff - both as a teacher and a coach.

Exceptional	3
Highly Competent	9
Competent	3
Needs Improvement	0
Poor	0
Don't Know/No Experience	0

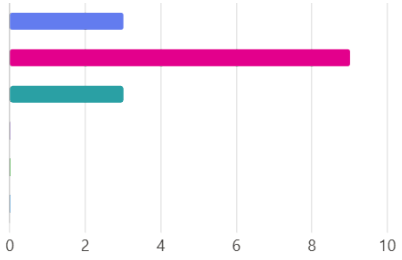

12. Please provide your overall comments on the City Manager's performance on leadership of the city.

11
Responses

Latest Responses

"Frances is a thoughtful leader and cares about staff."

"Frances is a very effective and dedicated leader of the city."

"Frances has cultivated a positive organizational culture built on trust, transparenc... "

• • •

5 respondents (50%) answered Frances for this question.

Update



13. Provides high level of public information and expects excellent customer service.

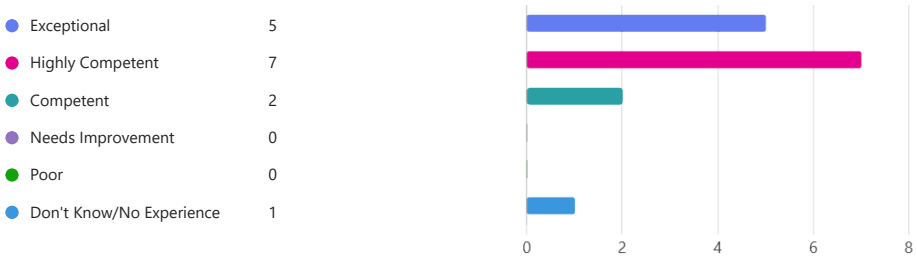

14. Is accessible; encourages citizen feedback and acts on this information.

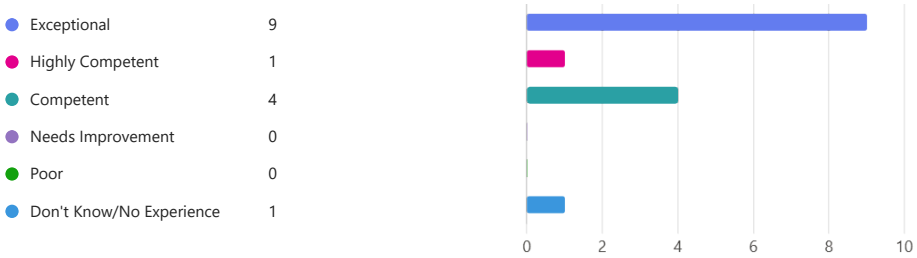

15. Ensures quick follow-up and resolution to citizen complaints and request for service.

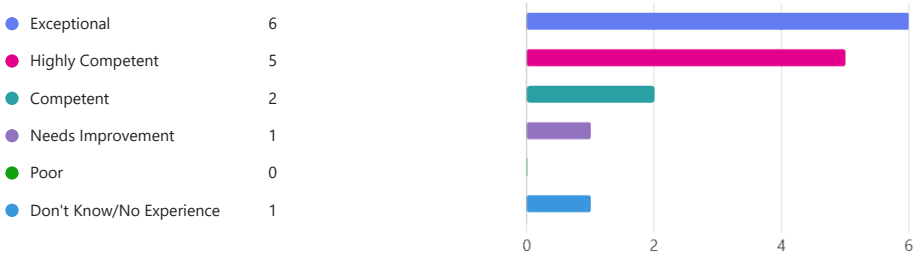

16. Maintains and expects you to maintain effective, cooperative relationships with local cities, the county, colleges, regional school districts and the business community.

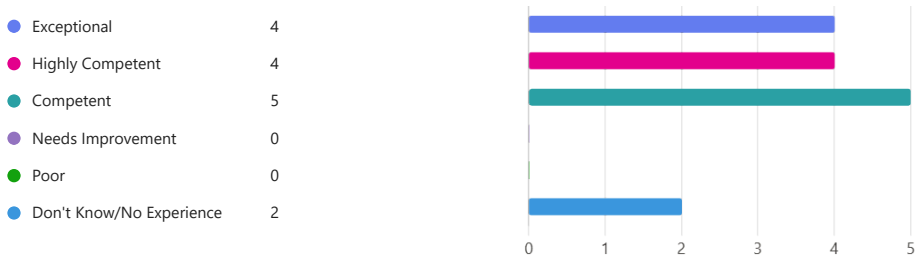

17. Provide your overall comments on the City Manager's performance on community relations.

6
Responses

Latest Responses
"Frances is very accessible and highly responsive to community input and concerns."
"Frances consistently demonstrates innovative leadership by identifying creative s... "
...

3 respondents (50%) answered community for this question.



18. Effectively reports and projects the financial condition of the City.

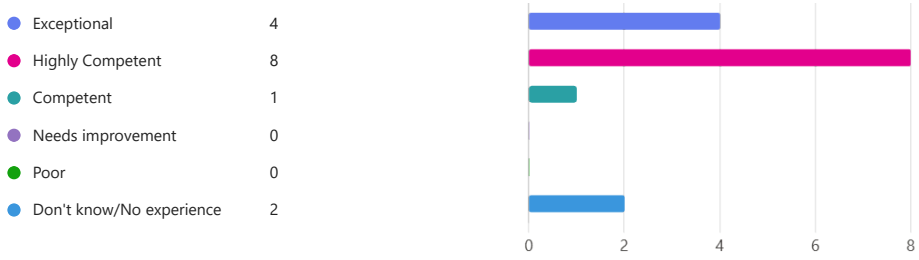

19. Designs management practices/policies to maintain a sound, long-range financial position.

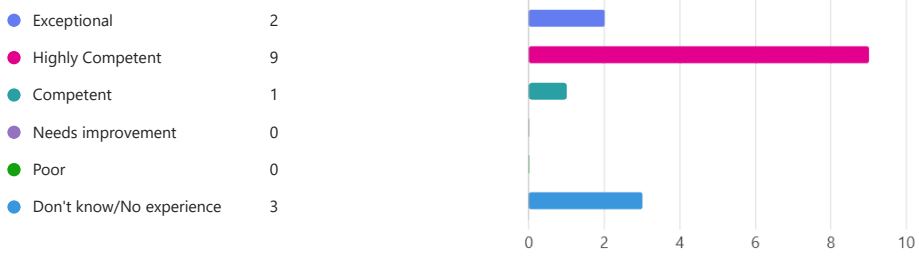

20. Implements effective programs to limit liability and loss.

Exceptional	2
Highly Competent	5
Competent	3
Needs improvement	0
Poor	0
Don't know/No experience	5

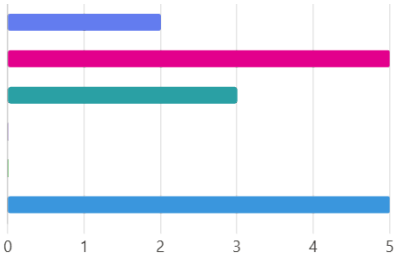

21. Effectively helps establish and implement Commission budgetary goals.

Exceptional	2
Highly Competent	10
Competent	1
Needs improvement	1
Poor	0
Don't know/No experience	1

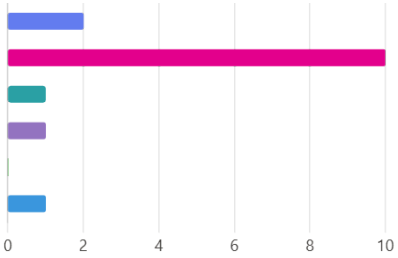

22. Maintains effective relationships with the Chamber of Commerce, business community, and other community groups.

Exceptional	3
Highly Competent	3
Competent	3
Needs improvement	1
Poor	0
Don't know/No experience	5

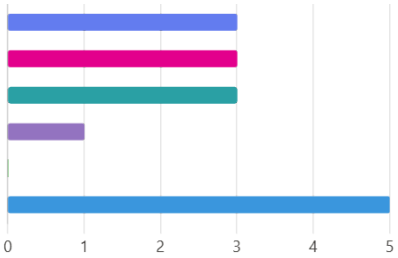

23. Please provide your overall feedback on the City Manager's performance on financial management of the City

4
Responses

Latest Responses
"Frances exhibits exceptional fiscal stewardship, carefully balancing the City's oper... "
• • •

24. Please list achievements since July 2025 that can be attributed to the City Manager's leadership.

8
Responses

Latest Responses
"Continued storm recovery efforts and rebuilding the community Revamping the ... "

4 respondents (50%) answered departments for this question.



25. Please list challenges outside of the City Manager's control that should be considered when evaluating their performance.

6
Responses

Latest Responses
"Ad valorem exemption impacts"

2 respondents (33%) answered commission for this question.



26. Please list performance targets and projects that you believe should be considered by the Elected Officials when developing the City Manager's work plan for the next year.

6
Responses

Latest Responses
"Economic Development - To include advancing initiatives that support local busin..."

2 respondents (33%) answered option for this question.



27. Please think about the City Manager's overall contribution to the City. Add any suggestions/comments that would help maintain their str engths and improve their skill.

5
Responses

Latest Responses

...

2 respondents (40%) answered employee for this question.



28. This survey may not have conveyed everything you would like to say about the City Manager. The comments section below allows you t o add supplementary information that you wish to express.

6
Responses

Latest Responses

"The City Manager is performing at a high level despite challenges with the city's f... "

"One of her greatest strengths is her ability to create an environment where empl... "

...

4 respondents (67%) answered city for this question.



APPENDIX B – FULL SURVEY COMMENTS – City Commission

Note: This appendix contains all survey comments collected through the evaluation process. Identifying details have been removed or generalized to protect anonymity in the other comments. The content reflects the original feedback as closely as possible.

All Other Comments

Question: Please provide your overall comments on the City Manager's performance on leadership of the city.

- Frances is doing an exceptional job as city manager. Since coming on board there have been many positive changes in both policy and staffing changes that have all been to the benefit of the city.
- I believe she does very well at delegating and letting her vision know to staff
- The City Manager is doing a great job.
- I have only been with the city for a short time but came from another neighboring city and our city manager is one of the best ones that I have worked with in over 20 years in city government.
- Frances continues to provide outstanding leadership, fosters a positive work environment, and effectively guides the organization toward achieving its strategic goals while maintaining a strong commitment to employees and the community.
- Very approachable and knowledgeable when I have interacted with her. Her expectation is to get positive results or to make changes for an efficient operation of the city. I applaud her straight froward approach to any challenges the city faces.
- The City Manager demonstrates strong leadership potential and has many of the qualities necessary to be an exceptional leader. She is knowledgeable, dedicated, and committed to serving the organization and community. However, there are opportunities for improvement in prioritization, employee engagement, and recognition. At times, organizational priorities do not appear to align with the operational needs of staff, and greater attention to the concerns and contributions of employees at all levels would help strengthen morale and foster a more inclusive workplace culture. While the leadership team often receives

recognition for accomplishments, lower-level staff who carry much of the day-to-day workload are not always acknowledged to the same degree. Employees would benefit from increased recognition, both verbally and financially. There is also concern that newer hires are receiving higher salaries and more favorable benefits than long-tenured employees, creating a perception of inequity. Greater focus on compensation fairness, longevity recognition, and appreciation for employees' dedication and service would help improve trust, morale, and retention throughout the organization.

- Frances is a highly capable and accomplished leader who consistently demonstrates strong expertise in her role and a deep understanding of organizational operations. She brings significant experience in leading organizational transformation efforts, helping departments navigate change while maintaining focus on service delivery and long-term strategic goals. She is effective at aligning people, processes, and priorities to achieve meaningful results. Through her leadership, she fosters accountability, encourages collaboration, and empowers staff to perform at a high level. Frances has a proven ability to maximize the strengths of her team while driving improvements that benefit the organization as a whole. Her combination of strategic thinking, operational knowledge, and people leadership makes her a valuable asset to the City and an important contributor to its continued growth and success.

- Frances has cultivated a positive organizational culture built on trust, transparency, and mutual respect. Her commitment to professional development, open communication, and employee engagement has strengthened teamwork and morale, creating an environment where staff feel supported, empowered, and motivated to deliver exceptional service to the community.

- Frances is a very effective and dedicated leader of the city.

- Frances is a thoughtful leader and cares about staff.

Question: Provide your overall comments on the City Manager's performance on community relations.

- Again, she is always available for both staff and citizens. She listens and she actions items as they are needed.

- I believe her door is open and is willing to discuss whatever matter with whoever is asking

- City Manager is very professional and very competent .

- The City Manager demonstrates a strong commitment to addressing community concerns and maintaining responsiveness to residents. However, there is a perception among some employees that community needs are often prioritized at the expense of internal operational and staff needs. Additionally, concerns have been raised that issues brought forward by the most vocal residents or those with direct access to leadership tend to receive more immediate attention and resolution than other community concerns. Ensuring a more balanced and equitable approach to prioritizing both resident requests and organizational needs, while applying consistent processes for addressing concerns, would help strengthen trust among employees and promote fairness in service delivery.

- Frances consistently demonstrates innovative leadership by identifying creative solutions to complex challenges and encouraging forward-thinking approaches across the organization. She fosters a collaborative work environment by actively engaging staff, elected officials, residents, and community partners in decision-making processes, ensuring diverse perspectives are considered and valued.

- Frances is very accessible and highly responsive to community input and concerns.

Question: Please provide your overall feedback on the City Manager's performance on financial management of the City.

- I think she has a close eye on the city's finances

- City Manager is done a fine job.

- The City Manager has maintained the City's financial stability and supported organizational operations; however, concerns have been raised regarding compensation practices and the allocation of financial resources. Some employees perceive that executive-level positions are being filled at significantly higher salary levels while longstanding concerns regarding employee pay equity, retention, and recognition remain unresolved. There is also concern that employees with little or no prior experience in a particular role are receiving substantial salary increases or starting salaries that exceed those of experienced, long-tenured employees performing the same or similar work. This has created a perception of inequity and diminished morale among staff. Greater transparency in compensation decisions, a stronger emphasis on internal equity, and recognition of employee experience, longevity, and institutional knowledge would help strengthen trust and confidence in the City's financial stewardship.

- Frances exhibits exceptional fiscal stewardship, carefully balancing the City's operational needs with long-term financial sustainability. Through prudent budgeting, strategic resource allocation, and thoughtful planning, she has consistently demonstrated a commitment to maximizing taxpayer value while maintaining the City's strong financial position.

Question: Please list achievements since July 2025 that can be attributed to the City Manager's leadership.

- Employee morale. Leadership changes. Accountability across all departments.
- Implementation of the new employee review program. All hands meetings to keep staff informed. Top 10 Commitments.
- employee morale is up.
- Support Staff development, Fiscal Responsibility with all Departments, Transparency, Fosters a Positive Work Environment, Outstanding Leadership
- The change made in the Fire Department for the position of Fire Chief. Good job. The city has needed a new leader in that department for a very long time.
- Negotiation of the Cory Landings condition use permit public benefits.
- Launch of new budget processes, platforms/tools, and rebuilt the Finance department, developed a multi-year strategic plan, rolled out performance planning processes, led ongoing coordinated response to FEMA, redesigned entire communication framework for external stakeholders, developed organizational culture and operating model.
- Continued storm recovery efforts and rebuilding the community
  Revamping the budgetary process
  Frances has also been highly effective in building strong relationships with a wide range of stakeholders, including residents, business owners, community organizations, regional partners, and governmental agencies. Her ability to build consensus and foster productive partnerships has strengthened the City's position and advanced key initiatives. She represents the City exceptionally well at the regional level, serving as a respected and credible advocate whose professionalism and collaborative approach have enhanced the City's reputation and influence throughout the region.
-

Question: Please list challenges outside of the City Manager's control that should be considered when evaluating their performance.

- Trying to meet unrealistic expectations from staff, commission, residents.
- If it is out of their control all you can ask is that they do their best. and learn from the experience
- I have no challenges to report.
- Conflicting agendas
- changing of the commission members, SB180, Legislature related to tax cuts and new budgetary restrictions coming from the state.
- Ad valorem exemption impacts

Question: Please list performance targets and projects that you believe should be considered by the Elected Officials when developing the City Manager's work plan for the next year.

- Balanced budget, long term projects completed or at least started.
- rebuild our infrastructure.
- More opportunity for work life balance for City Employees, specifically increased PTO and added sick time.
- If we have one brief sickness or family emergency it can quickly wipe out an entire bank of slow accruing PTO, this causes significant strain on employees because full time staff have little opportunity to take any time off for rest, vacation, or mental health.
- Part time employees can bank their PTO for emergencies because of flexible scheduling so if they get sick, they generally don't have to use PTO, just switch work days. Full time staff don't have that option. This significantly impacts work performance, attitude, and employee morale.
- fiscal stability
- Number one from my perspective is to develop a prioritization framework that helps drive organizational rigor and cohesiveness around goals, objectives, and project portfolio.

- Economic Development - To include advancing initiatives that support local businesses, expand housing options for residents and the workforce, and strengthen the City's tourism economy while balancing the needs of the community.

Question: Please think about the City Manager's overall contribution to the City. Add any suggestions/comments that would help maintain their strengths and improve their skill.

- Continue listening. Keep holding staff accountable.

- Due to her leadership, I feel communication throughout the city is much improved and employee morale is up

1) An updated accurate pay plan for employees based on experience, knowledge, and tenure.

2) EOC Organization Chart explaining roles and responsibilities for all employees since we are all required to sign a “First Responder Acknowledgement Form” even though no one knows what they are to do in an emergency atmosphere.

3) Help getting adequate and clean facilities for all departments. Public Services, City Hall, Recreation are still suffering for hurricane damage, leaking roofs, mold and mildew, terrible quality toilet paper, disgusting carpet, AC systems that break once a week and/or not enough space for the amount of employees we continue to hire.

4) Provide some sort of feedback/ “suggestion box” platform for all employees at all times, so everyone feels heard, not just an anonymous survey every quarter at All Hands meetings.

5) More city employee benefits - we lost our weight/gym room access, fitness/health incentives that could be provided through insurance. Better health insurance in general would be nice (United Healthcare)!

6) What happened to the flexible work schedule?? Best thing for staff morale would be (4)10-hour shifts for ALL employees! Half employees work Monday-Thursday, other half work Tuesday-Friday. You already have code enforcement that don’t work the weekends and are on 10 hour shifts! If you need weekend coverage, it’s Wed-Sat, Thursday-Sunday.

7) We need more PTO hours to help maintain this so called “Work life balance”. Add in sick/comp/personal time back.

- Continue to drive toward improving morale and team culture. When things get busy and the workload is sigificant, helping the collective team be successful is still the most impact area you can improve as it affects city-wide service delivery.

Question: This survey may not have conveyed everything you would like to say about the City Manager. The comments section below allows you to add supplementary information that you wish to express.

- In the little over 4 years that I have been with the city, I can definitely see changes for the better in the way things have been ran. I feel the city of St Pete Beach is headed in the right direction with her leadership.

- N/A

- At times, there appears to be an expectation that the Commission has direct influence over matters that are more appropriately managed by the City Manager. To improve organizational efficiency, the City Manager should reclaim greater decision-making authority within the administrative structure and empower staff and department leaders to carry out their responsibilities without unnecessary involvement from boards, commissioners, and the mayor. Establishing clearer boundaries between governance and administration would help reduce workload demands, decrease the number of meetings required to address routine matters, and alleviate stress on departments. This approach would allow staff to focus more effectively on service delivery and strategic priorities while ensuring that boards and commissions remain focused on policy

- Frances provides tremendous value to the City through her strong leadership, clear vision, and unwavering commitment to organizational improvement. She is a natural galvanizer who brings people together around common goals, builds momentum for important initiatives, and fosters collaboration across departments.

  She leads by example, setting high standards for professionalism, accountability, and service while holding herself and others responsible for delivering results. Frances is effective at driving change and challenging the organization to think differently about how it serves residents and conducts business.

  Her efforts to improve transparency, strengthen community partnerships, and modernize City operations are helping create a more responsive, accountable, and citizen-focused organization. Through her leadership, the City is better positioned to build trust with the community, improve service delivery, and achieve its long-term strategic objectives.

  One of her greatest strengths is her ability to create an environment where employees feel valued, respected, and encouraged to grow professionally. She

invests in her team, recognizes individual strengths, and provides opportunities for learning, development, and advancement. As a result, she has fostered a workplace culture where staff are motivated to continuously improve, contribute new ideas, and reach their full potential. Her commitment to developing people has strengthened the organization and positioned it for continued success.

- The City Manager is performing at a high level despite challenges with the city's finances, infrastructure, and to some extent with personnel. The city is fortunate to have an experienced, accessible, and flexible leader who can be trusted to make the right and often difficult decisions that are in the best interest of the organization.

SECOND AMENDMENT TO CITY MANAGER EMPLOYMENT AGREEMENT CITY OF ST. PETE BEACH, FLORIDA AND FRANCES ROBUSTELLI

THIS SECOND AMENDMENT TO CITY MANAGER EMPLOYMENT AGREEMENT ("Second Amendment") is made and entered into as of _____, 2026 ("Second Amendment Effective Date"), by and between the City of St. Pete Beach, Florida, a Florida municipal corporation ("City"), and Frances Robustelli, an individual ("Employee"). The City and Employee are collectively referred to as the "Parties."

RECITALS

WHEREAS, the Parties entered into that certain City Manager Employment Agreement dated April 9, 2024 ("Agreement"), pursuant to which Employee serves as City Manager of the City; and

WHEREAS, the Parties previously amended the Agreement pursuant to that certain First Addendum to City Manager Employment Agreement dated August 19, 2025 (the "First Amendment"), which amended the Agreement with respect to Employee's base salary and paid time off; and

WHEREAS, Section 3.2 of the Agreement provides that the Term of the Agreement may be extended upon specific action of the City Commission and with a written agreement executed by both Parties; and

WHEREAS, Section 8.1 of the Agreement addresses Employee’s base salary and compensation review; and

WHEREAS, the Parties desire to extend the Term of the Agreement for an additional two years and to provide for cost-of-living adjustments during the remaining years of the Agreement; and

WHEREAS, the Parties further desire, to the maximum extent permitted by applicable law, the City Charter, and the City Code, to provide a limited transition period following a City election before the City Commission may terminate Employee without cause; and

WHEREAS, the Parties desire to enter into this Second Amendment to further amend the Agreement, as previously amended by the First Amendment.

NOW, THEREFORE, in consideration of the mutual covenants contained herein and other good and valuable consideration, the receipt and sufficiency of which are acknowledged, the Parties agree as follows:

1. **RECITALS; DEFINED TERMS**

The foregoing recitals are true and correct and are incorporated into this Second Amendment. Capitalized terms used but not otherwise defined in this Second Amendment have the meanings given to them in the Agreement, as previously amended by the First Amendment.

2. TWO-YEAR EXTENSION OF TERM

Section 3.1 of the Agreement is amended to extend the Term by two additional years. Accordingly, Employee's appointment as City Manager shall continue until the fifth anniversary of the Start Date, unless the Agreement is earlier terminated in accordance with its terms, as previously amended by the First Amendment, as amended by this Second Amendment, and applicable law. Section 3.2 of the Agreement remains in effect, except that all references to the expiration of the Term shall mean the expiration of the extended Term established by this Second Amendment.

3. COST-OF-LIVING ADJUSTMENTS

Section 8.1 of the Agreement is amended to add the following paragraph at the end of that section:

In addition to any compensation adjustment that may be approved by the City Commission following a performance evaluation, Employee shall receive any cost-of-living adjustment ("COLA") granted to the City's general employees during each remaining year of the Term, as extended. The COLA shall be provided at the same time, in the same manner, and in the same percentage or amount as the COLA granted to general employees, and shall be applied to Employee's then-current base salary. A COLA provided under this paragraph shall not preclude the City Commission from separately considering a merit, performance-based, market, or other lawful salary adjustment pursuant to Section 8.1 of the Agreement.

4. LIMITED POST-ELECTION TRANSITION PERIOD

Section 4 of the Agreement is amended to add the following new subsection:

4.9 Limited Post-Election Transition Period. To the maximum extent permitted by applicable law, the City Charter, and the City Code, the City Commission shall not terminate Employee without cause during the ninety (90) calendar days immediately following certification of the official results of any regular City election at which one or more members of the City Commission are elected or reelected. During such ninety (90) day period, Employee shall continue to serve as City Manager and shall have a reasonable opportunity to work with any newly elected or reelected member of the City Commission. This subsection does not limit or restrict the City Commission's authority to terminate Employee for cause as provided in Section 4.5 of the Agreement; to act in response to misconduct, gross misfeasance, malfeasance, gross incompetence, illegal acts, or other conduct identified in Section 4.5; to accept Employee's resignation; to allow the Agreement to expire at the end of its Term; or to take any other action required or authorized by applicable law, the City Charter, or the City Code. If any portion of this subsection is determined by a court of competent jurisdiction to be invalid or unenforceable, that portion shall be deemed modified to the

minimum extent necessary to make it enforceable, and the remaining provisions of this Second Amendment and the Agreement shall remain in full force and effect.

5. NO ADDITIONAL SEVERANCE

Nothing in this Second Amendment increases, supplements, or creates any severance benefit beyond the severance, if any, expressly provided in Section 4 of the Agreement. The Parties intend that all severance provisions in the Agreement, as amended, comply with section 215.425, Florida Statutes, including the limitation that severance pay may not exceed twenty (20) weeks of compensation and the prohibition on severance pay when an employee has been fired for misconduct as defined by applicable law.

6. RATIFICATION; CONFLICTS

Except as expressly amended by this Second Amendment, the Agreement, as previously amended by the First Amendment, remains unchanged and in full force and effect. In the event of a conflict between the terms of this Second Amendment and the terms of the Agreement, as previously amended by the First Amendment, the terms of this Second Amendment shall control. In the event of a conflict between this Second Amendment and applicable law, the City Charter, or the City Code, applicable law, the City Charter, or the City Code shall control.

7. COUNTERPARTS; AUTHORITY

This Second Amendment may be executed in counterparts, each of which shall be deemed an original and all of which together shall constitute one instrument. Each person signing this Second Amendment represents that the person has authority to bind the Party on whose behalf the person signs.

IN WITNESS WHEREOF, the Parties have executed this Second Amendment as of the Second Amendment Effective Date.

EMPLOYEE:	**CITY OF ST. PETE BEACH**
_____	_____
Frances Robustelli	**Scott Tate, Mayor**